Service Bulletin SB-0006

Technical Portions FAA Approved

Epic Aircraft, LLC ◆ 22590 Nelson Road ◆ Bend OR 97701
Phone: 541-318-8849 ◆ Fax: 541-382-5125 ◆ Web: www.epicaircraft.com

Subject: Inertial Separator Actuator Replacement

ATA-Code: 71-60

Labor: 8.0 hours

Effectivity: K003-K005

Affected Model(s): E1000

Due: Next scheduled service interval.

Compliance: Mandatory
(Optional if SB-0006 Original Issue has been incorporated)

Recurrence: No

1 BACKGROUND AND PURPOSE:

It has been determined that there is the possibility for the Inertial Separator Actuator to short internally through the actuator case and potentially cause damage to the surrounding structure.

This Service Bulletin gives instructions to replace the Inertial Separator Actuators with an improved design with an internal brake and remove the stop spring assemblies.

Service Bulletins SB-0004 and SB-0005 must be performed prior to or in conjunction with this Service Bulletin.

This service bulletin is optional if the original issue of SB-0006 has been incorporated.

2 REFERENCES:

Epic E1000 Aircraft Maintenance Manual, P/N SK05000000

3 WARRANTY:

For aircraft under warranty, parts and labor will be covered by Epic Aircraft, LLC if the work is performed within the compliance period and at an Authorized E1000 Service Center.

Epic Aircraft, LLC ◆ 22590 Nelson Road ◆ Bend OR 97701
Phone: 541-318-8849 ◆ Fax: 541-382-5125 ◆ Web: www.epicaircraft.com

4 TOOLS:

No.	Description	Qty	Epic Aircraft Supplied	Customer Supplied
1.	Common hand tools.	A/R	☐	☒
2.	14v Power Supply	1	☐	☒

5 PARTS/MATERIALS:

No.	Part Number	Description	Qty	Epic Aircraft Supplied	Customer Supplied
1.	AK71694100--	ASSY, LINEAR ACTUATOR, BRAKED	2	☒	☐

Epic Aircraft, LLC ◆ 22590 Nelson Road ◆ Bend OR 97701
Phone: 541-318-8849 ◆ Fax: 541-382-5125 ◆ Web: www.epicaircraft.com

6 INSTRUCTIONS:

A) Set the BATT 1 and BATT 2 switches to OFF.

B) Remove all external electrical power to the airplane (refer to the E1000 AMM PN SK05000000, chapter 24-40).

C) Remove the cowling (refer to the E1000 AMM PN SK05000000, chapter 71-10).

D) Activate Inertial Separators. Pull breaker when tension is released from spring and rigging. Pull and tag breaker.

> **Note:** The procedure for replacing the Inertial Separator Actuators is the same for the left and right sides.

E) If Service Bulletin SB-0004 has been complied with, remove case ground from actuator housing.

F) Remove #1 forward vane control rod.

G) Remove spring and mounting pad from left and right inertial separator assemblies (refer to Figure 1).

> **Note:** In order to gain access, the right inertial separator assembly may need to be removed.

H) Disconnect the Inertial Separator Actuator electrical connector (refer to Figure 2).

I) Remove the cotter pins, nuts, washers, and bolt that attach the Inertial Separator Actuator to the engine intake plenum and bellcrank.

J) Remove the Inertial Separator Actuator.

K) Put the new Inertial Separator Actuator in position.

L) Install the bolt, washers, nuts, and cotter pins that attach the Inertial Separator Actuator to the engine intake plenum and bellcrank.

M) Reinstall the case ground to housing.

N) Connect a 14v power supply to the Inertial Separator Actuator.

O) Start by turning both tie rod ends in on both sides until they bottom out (refer to Figure 3).

P) Using power supply, activate inertial separator until #1 (forward) vane is seated fully and #2 (aft) vane is seated fully against the seal.

Q) Adjust as required to achieve proper seal.

R) Tighten jam nuts and install lockwire or cotter pins at each location.

Epic Aircraft, LLC ◆ 22590 Nelson Road ◆ Bend OR 97701
Phone: 541-318-8849 ◆ Fax: 541-382-5125 ◆ Web: www.epicaircraft.com

S) Repeat steps 5.E through 5.R on the opposite side.

T) Close the INERT SEP circuit breaker.

U) Do the operational check of the inertial separators (refer to the E1000 AMM P/N SK05000000, chapter 24-00.3.AB.2).

V) Install the cowling (refer to the E1000 AMM PN SK05000000, chapter 71-10).

Epic Aircraft, LLC ◆ 22590 Nelson Road ◆ Bend OR 97701
Phone: 541-318-8849 ◆ Fax: 541-382-5125 ◆ Web: www.epicaircraft.com

Figure 1: Inertial Separator Actuator Replacement

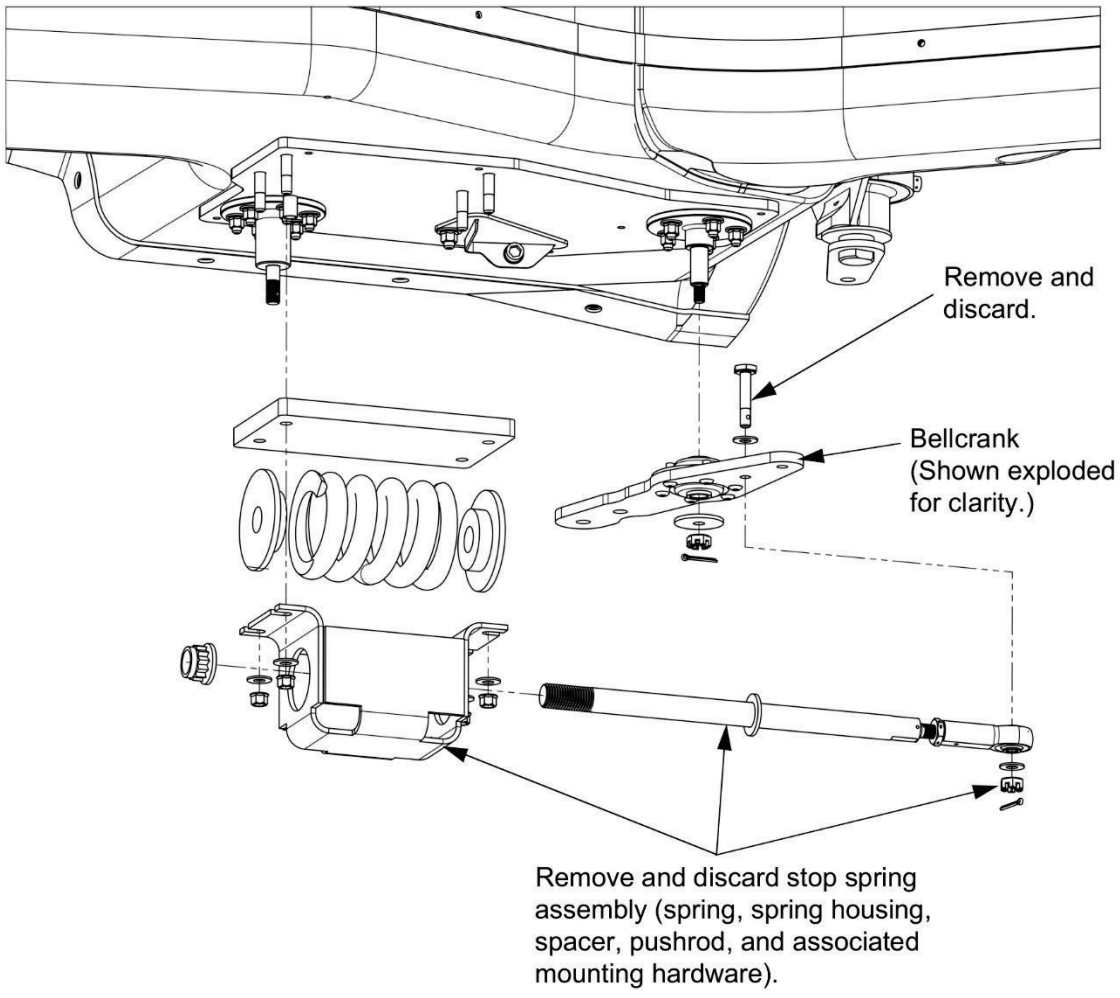

Left side shown, right side opposite.

Epic Aircraft, LLC ◆ 22590 Nelson Road ◆ Bend OR 97701
Phone: 541-318-8849 ◆ Fax: 541-382-5125 ◆ Web: www.epicaircraft.com

Figure 2: Inertial Separator Actuator Replacement

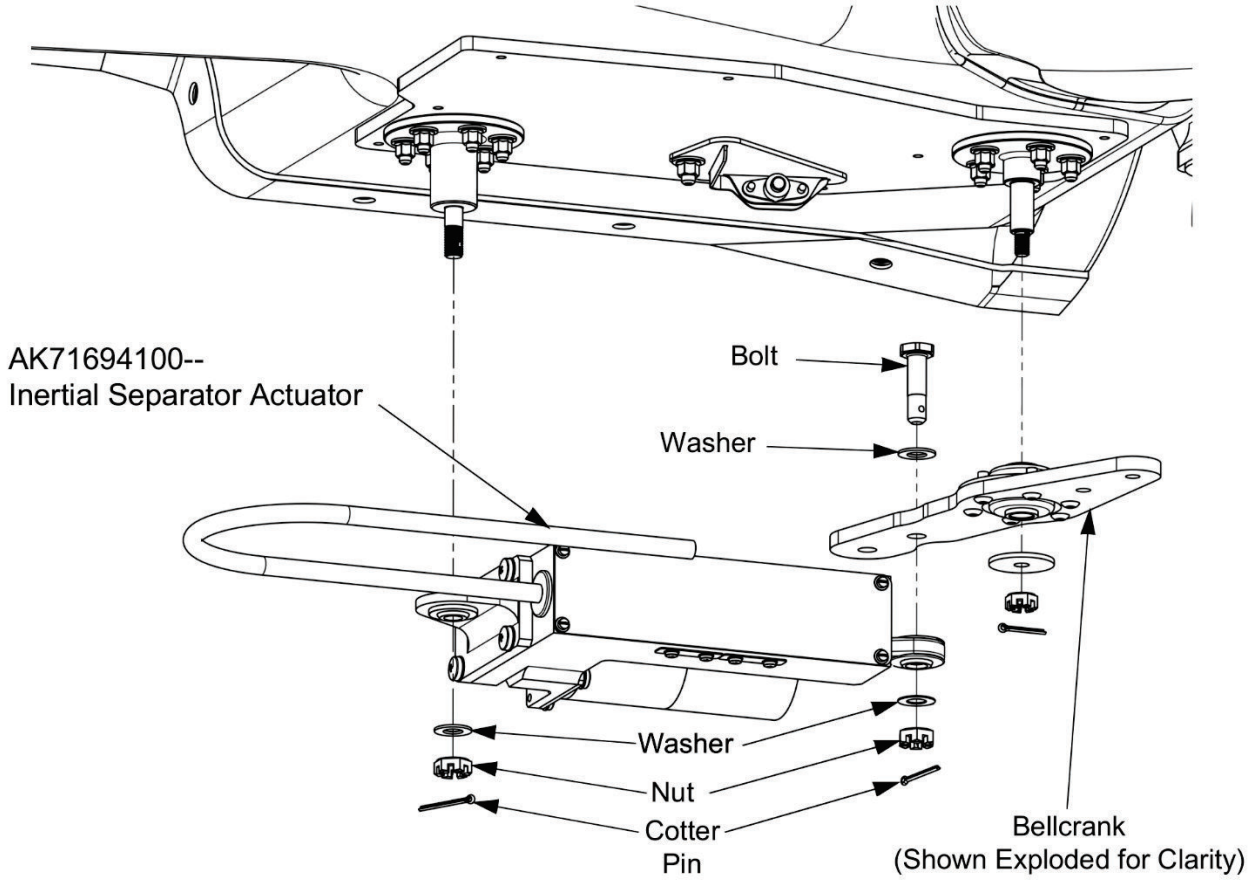

Left side shown, right side opposite.

Epic Aircraft, LLC ◆ 22590 Nelson Road ◆ Bend OR 97701
Phone: 541-318-8849 ◆ Fax: 541-382-5125 ◆ Web: www.epicaircraft.com

Figure 3: Inertial Separator Actuator Replacement

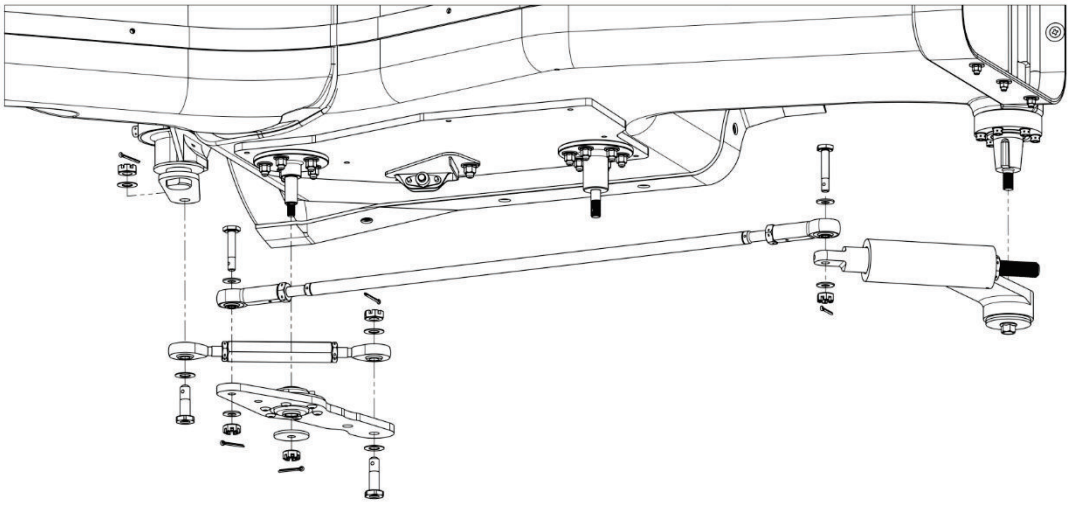

Right side shown, left side opposite.

Epic Aircraft, LLC ◆ 22590 Nelson Road ◆ Bend OR 97701
Phone: 541-318-8849 ◆ Fax: 541-382-5125 ◆ Web: www.epicaircraft.com

7 WEIGHT AND BALANCE:

Negligible

8 PUBLICATIONS AFFECTED:

Epic E1000 Aircraft Maintenance Manual, P/N SK05000000
Epic E1000 Illustrated Parts Catalog P/N SK05000004

9 RECORD COMPLIANCE:

Make appropriate entry in airplane maintenance records.

Epic Aircraft, LLC ◆ 22590 Nelson Road ◆ Bend OR 97701
Phone: 541-318-8849 ◆ Fax: 541-382-5125 ◆ Web: www.epicaircraft.com

Appendix A: Compliance Letter

Please complete and mail this form to Customersupport@epicaircraft.com

This is to certify that I have completed the work in accordance with the Epic Aircraft, LLC Service Bulletin.

Aircraft Owner Information:
Date: _____ Aircraft Serial Number: _____ Aircraft Reg. Number: _____ Owner's Name: _____
Maintenance Entity Information
Name of Shop Performing the work: _____ Name of Person(s) Performing inspection and/or work: _____ Phone Number: _____ Email: _____