Service Bulletin SB-0010

Technical Portions FAA Approved

Epic Aircraft, LLC ◆ 22590 Nelson Road ◆ Bend OR 97701
Phone: 541-318-8849 ◆ Fax: 541-382-5125 ◆ Web: www.epicaircraft.com

Subject: Standby Alternator Replacement

ATA-Code: 24-30

Labor: 4.0 hours

Effectivity: K003 – K007

Affected Model(s): E1000

Due: Next scheduled maintenance event.

Compliance: Mandatory

Recurrence: No

1 BACKGROUND AND PURPOSE:

The alternator drive pad (drive pad C) on the accessory gearbox (AGB) utilizes an unsealed wet spline. In the current configuration this can allow an excessive amount of oil to leak past the drive spline and out the drive pad drain.

This service bulletin gives instructions to replace the alternator with a redesigned assembly to prevent leakage issues.

2 REFERENCES:

Epic E1000 Aircraft Maintenance Manual P/N SK05000000

3 WARRANTY:

For aircraft under warranty, parts and labor will be covered by Epic Aircraft, LLC if the work is performed within the compliance period and at an Authorized E1000 Service Center.

4 PARTS/MATERIALS:

No.	Part Number	Description	Qty	Epic Aircraft Supplied	Customer Supplied
1.	PK99007049 B-	Alternator, Extended, For PT6A	1	☒	☐
2.	MS9134-01	Gasket - Type X or XV Engine Accessory Drive	1	☒	☐
3.	MS51023-51	Set Screw	1	☒	☐
4.	1/8 HP-SS	Plug	1	☒	☐
5.	AS33671-2	Strap, Tiedown Electrical, MIL-Spec	1	☒	☐
6.	LOCTITE 272	High Strength, High Temperature Threadlocker	A/R	☒	☐
7.	AA58092-2-2	Thread Sealant Tape	A/R	☒	☐

Epic Aircraft, LLC ◆ 22590 Nelson Road ◆ Bend OR 97701
Phone: 541-318-8849 ◆ Fax: 541-382-5125 ◆ Web: www.epicaircraft.com

5 INSTRUCTIONS:

a) Remove the standby alternator (refer to the E1000 AMM PN SK05000000, chapter 24-30.2.F). Retain the nuts and washers.

b) Remove and discard the tiedown strap attaching the standby alternator drain line to the AGB breather tube.

c) Remove and discard the standby alternator drain line.

d) Remove and discard the hose barb from the standby alternator spacer.

e) Remove and discard the hose barb from the drain manifold.

f) Install the new Standby Alternator, PN PK99007049 B-, using a new MS9134-01 gasket and retained nuts and washers (refer to the E1000 AMM PN SK05000000, chapter 24-30.2.F).

g) Install the MS51023-51 set screw in the standby alternator spacer using Loctite 272. Torque the set screw to 22-26 in-lb.

I **h)** Install the 1/8 HP-SS plug in the drain manifold using AA58092-2-2 tape. Tighten to ½ to 1 ½ turns beyond hand tight.

i) Install the tiedown strap to attach the hydraulic pump drain line to the AGB breather tube.

j) Do the operational check of the standby alternator (refer to the E1000 AMM PN SK05000000, chapter 24-00.3.U).

k) Return the removed standby alternator to Epic Aircraft. Reference the aircraft serial number on the packaging:

Epic Aircraft, LLC
22560 Nelson Road
Bend, OR 97701

Epic Aircraft, LLC ◆ 22590 Nelson Road ◆ Bend OR 97701
Phone: 541-318-8849 ◆ Fax: 541-382-5125 ◆ Web: www.epicaircraft.com

Figure 1: Standby Alternator Replacement

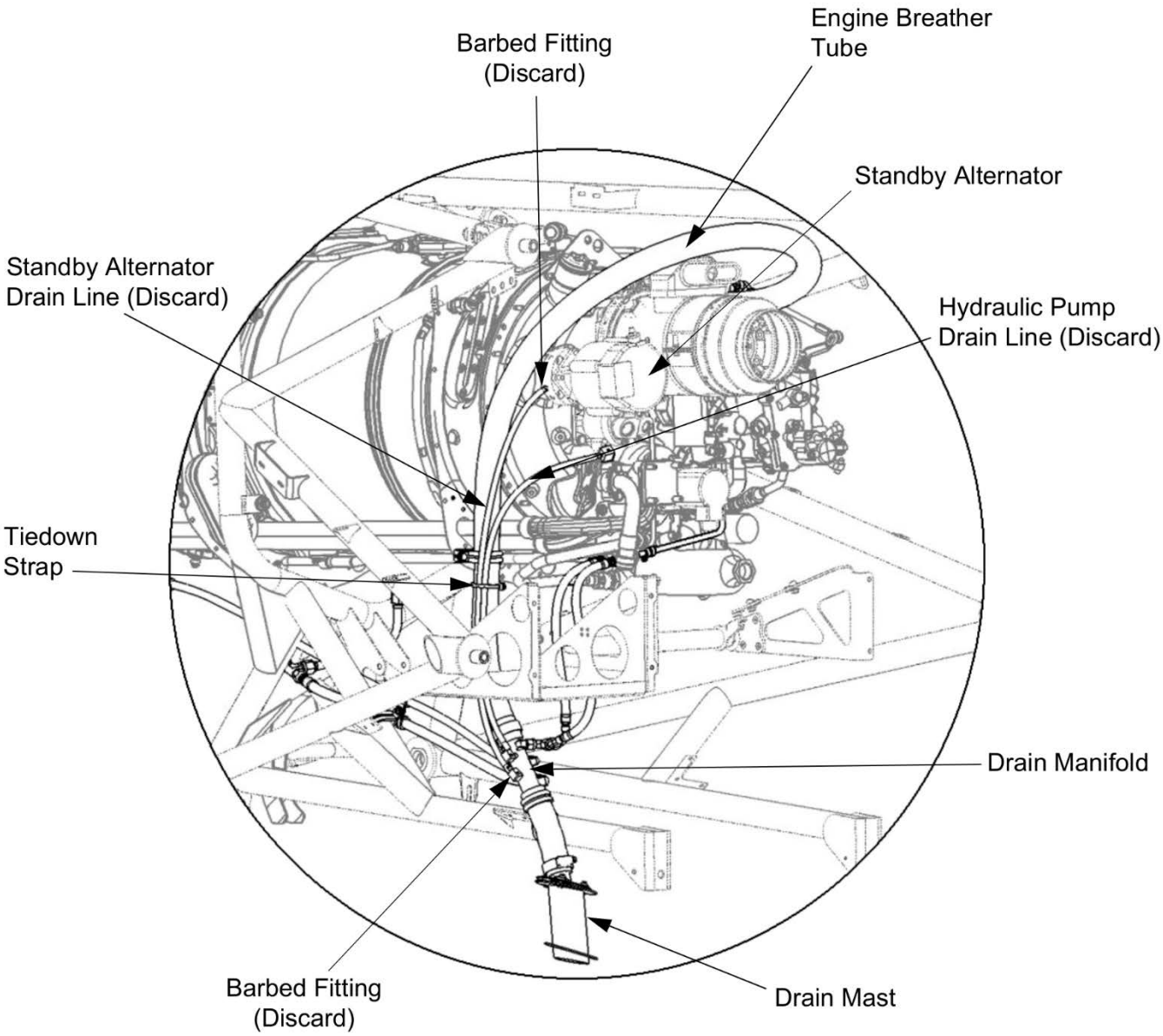

Epic Aircraft, LLC ◆ 22590 Nelson Road ◆ Bend OR 97701
Phone: 541-318-8849 ◆ Fax: 541-382-5125 ◆ Web: www.epicaircraft.com

6 WEIGHT AND BALANCE:

Negligible

7 PUBLICATIONS AFFECTED:

Epic E1000 Aircraft Maintenance Manual P/N SK05000000
Epic E1000 Illustrated Parts Catalog P/N SK05000004

8 RECORD COMPLIANCE:

Make appropriate entry in airplane maintenance records.

Epic Aircraft, LLC ◆ 22590 Nelson Road ◆ Bend OR 97701
Phone: 541-318-8849 ◆ Fax: 541-382-5125 ◆ Web: www.epicaircraft.com

Appendix A: Compliance Letter

Please complete and mail this form to Customersupport@epicaircraft.com

This is to certify that I have completed the work in accordance with the Epic Aircraft, LLC Service Bulletin.

Aircraft Owner Information:
Date: _____ Aircraft Serial Number: _____ Aircraft Reg. Number: _____ Owner's Name: _____
Maintenance Entity Information
Name of Shop Performing the work: _____ Name of Person(s) Performing inspection and/or work: _____ Phone Number: _____ Email: _____