Service Bulletin SB-0022

Technical Portions FAA Approved

Epic Aircraft, LLC ◆ 22590 Nelson Road ◆ Bend OR 97701
Phone: 541-318-8849 ◆ Fax: 541-382-5125 ◆ Web: www.epicaircraft.com

Subject: Magnetometer Interference Test

ATA-Code: 34–20

Labor: 1.0 hours (Test Only),
8.0 hours (All corrective procedures)

Effectivity: K004 – K010

Affected Model(s): E1000

Due: Next annual inspection.

Compliance: Mandatory

Recurrence: No

1 BACKGROUND AND PURPOSE:

On affected aircraft, it has been found that some wire routing may be causing Electromagnetic Interference (EMI) with the magnetometers.

This Service Bulletin contains instructions to test the magnetometers for interference and correct any EMI issues that are found.

Note: If replacement of the aft bulkhead coaxial adapter is required, alternate adapters are available and may be installed using FAA field approval at the customer's expense.

2 REFERENCES:

Epic E1000 Aircraft Maintenance Manual P/N SK05000000

Epic E1000 Pilot's Operating Handbook and FAA Approved Airplane Flight Manual P/N 0 SK05000001

Garmin GSU 75 ADAHRS Installation Manual P/N 190-01639-00

Garmin Line Maintenance and Configuration Manual P/N 190-00303-04

Garmin G1000 NXi Line Maintenance Manual P/N 190-02330-01

3 WARRANTY:

For aircraft under warranty, parts and labor will be covered by Epic Aircraft, LLC if the work is performed within the compliance period and by a properly certificated Airframe and Power Plant mechanic or FAA approved repair station.

Epic Aircraft, LLC ◆ 22590 Nelson Road ◆ Bend OR 97701
Phone: 541-318-8849 ◆ Fax: 541-382-5125 ◆ Web: www.epicaircraft.com

4 TOOLS:

No.	Description	Qty	Epic Aircraft Supplied	Customer Supplied
1.	Common hand tools.	AR	☐	☒
2.	¾" Step Drill Bit	1	☐	☒

5 PARTS/MATERIALS:

No.	Part Number	Description	Qty	Epic Aircraft Supplied	Customer Supplied
1.	MS35489-150	Grommet, .500 I.D. x 1.000 O.D. x .094 Groove	1	☒	☐
2.	NAS1149F0832P	Washer, Flat 1/2 x .032	1	☒	☐
3.	CB9151V5, CB9120V5, CB4561V5, CB4560V5, CB9302V3, or CB4064V3-6	ClickBond Cable Tie Mount	3	☒	☐
4.	14320,14340, 14385, or 14390	Devcon Plastic Welder or Plastic Welder 2	A/R	☐	☒
5.	AS33671-2	Strap, Tie Down, Adjustable	3	☐	☒

6 INSTRUCTIONS:

1. Connect external electrical power to the airplane (refer to Epic E1000 Aircraft Maintenance Manual, PN SK05000000, chapter 24-40).
2. Put the aircraft in Configuration mode:
   a. Press ENTER on the pilot's PFD while turning BATT 1 and BATT 2 switches ON.
   b. Release ENTER when the INITIALIZING SYSTEM message is displayed on the PFD.
3. Start the engine (refer to Epic E1000 Pilot's Operating Handbook and FAA Approved Airplane Flight Manual, PN SK05000001).
4. On the PFD, turn the large FMS knob clockwise to select GRS Page Group.
5. From the GRS Page Group, turn the small FMS knob to display the GRS/GMU Calibration page.
6. Make sure GRS 1 is selected.
7. Press the 9, 10, 11, and 12 softkeys, then press the ENT softkey to unlock the Mag Interference Test.
8. Press the FMS knob to activate the cursor, then rotate the large FMS knob to select SELECT PROCEDURE.

Epic Aircraft, LLC ◆ 22590 Nelson Road ◆ Bend OR 97701
Phone: 541-318-8849 ◆ Fax: 541-382-5125 ◆ Web: www.epicaircraft.com

9. Rotate small FMS knob to select MAG INTERFERENCE TEST, and then press ENTER.

NOTE: If the MAG INTERFERENCE TEST selection is blinking, press ENTER again.

Follow the checklist items listed below displayed on the PFD, and then press ENTER as each one is completed or confirmed.

10. When the CALIBRATE field is blinking, press the ENTER key to begin the procedure, and have a stopwatch ready to begin recording the elapsed time.

ELAPSED TIME	ACTION
0:00	Test begins
0:10	Generator ON
0:20	Generator OFF
0:30	Alternator ON
0:40	Alternator OFF
0:50	Pitot Heat ON
1:00	Pitot Heat OFF
1:10	Flaps UP
1:20	Flaps T/O
1:30	Flaps FULL
1:45	Aileron Trim FULL LEFT
2:00	Aileron Trim CENTER
2:15	Aileron Trim FULL RIGHT
2:30	Rudder trim FULL LEFT
2:45	Rudder trim CENTER
3:00	Rudder trim FULL RIGHT
3:15	Elevator trim FULL UP
3:30	Elevator trim CENTER
3:45	Elevator trim FULL DOWN
4:00	Navigation Lights ON
4:10	Navigation Lights OFF
4:20	Strobe Lights ON
4:30	Strobe Lights OFF
4:40	Navigation and Strobe Lights ON
4:50	Navigation and Strobe Lights OFF
5:00	Stall Test switch (Hold for 5 sec)
5:15	No action

Epic Aircraft, LLC ◆ 22590 Nelson Road ◆ Bend OR 97701
Phone: 541-318-8849 ◆ Fax: 541-382-5125 ◆ Web: www.epicaircraft.com

ELAPSED TIME	ACTION
5:30	Command Autopilot to engage elevator servo for PITCH UP
5:45	Command Autopilot to engage elevator servo for PITCH DOWN
6:00	Command Autopilot to engage rudder servo for YAW LEFT
6:15	Command Autopilot to engage rudder servo for YAW RIGHT
6:30	Command Autopilot to engage roll servo for ROLL LEFT
6:45	Command Autopilot to engage roll servo for ROLL RIGHT
7:00	Window ALL CLEAR
7:10	Window ALL DARK
7:20	Generator ON
7:30	Full Fan
7:40	Air Conditioning ON
7:50	Air Conditioning OFF
8:00	Fan OFF
8:10	End of Test

11. When the operator completes the test sequence, press ENTER.

NOTE: When this is done, the TEST COMPLETE field stops blinking.

12. Repeat steps (6 - 12) with GRS 2 selected.

13. Shut down the engine (refer to Epic E1000 Pilot's Operating Handbook and FAA Approved Airplane Flight Manual, PN SK05000001).

14. The PFD informs the operator if the installation passed or failed the magnetometer interference test.

- **a.** If the test passes, no further action is required.
- **b.** If the test fails, proceed to the next step.

15. Set the BATT 1 and BATT 2 switches to OFF.

16. Remove the cargo net (refer to the E1000 AMM PN SK05000000, chapter 25-50).

17. Remove the aft pressure bulkhead finish panel (refer to the E1000 AMM PN SK05000000, chapter 25-50).

18. Remove the aft left lower passenger compartment finish panel (refer to the E1000 AMM PN SK05000000, chapter 25-20).

19. Remove the cargo floor bucket (refer to the E1000 AMM PN SK05000000, chapter 25-50).

20. Remove the bolts and washers that attach the baggage floor closeout panel the baggage floor panel. Remove the baggage floor closeout panel (refer to Figure 1).

Epic Aircraft, LLC ◆ 22590 Nelson Road ◆ Bend OR 97701
Phone: 541-318-8849 ◆ Fax: 541-382-5125 ◆ Web: www.epicaircraft.com

21. On the aft pressure bulkhead, ensure the AC Compressor electrical connector (P166) is fully engaged to its receptacle.

NOTE: If the harness is side loading the cannon plug, carefully manipulate the harness to relieve the side loading and tighten the cannon plug.

22. Remove the pressure bulkhead access panel (refer to the E1000 AMM PN SK05000000, chapter 21-30).

23. Disconnect the aft NAV antenna coaxial cable (HK23005320) from the forward and aft sides of the aft pressure bulkhead coaxial bulkhead adapter (refer to Figure 2).

24. Remove the coaxial bulkhead adapter from the right pressure bulkhead pass-through panel.

25. Rework the coaxial bulkhead adapter by doing one of the following:

- **a.** Install the insulating grommet as follows:
  - **i.** Use a ¾” step drill bit to open the passthrough hole from 0.50” to 0.75”.
  - **ii.** Debur the edges of the hole.
  - **iii.** NOTE: Clean all shavings from the area.
  - **iv.** Install the MS35489-150 grommet in the hole.
  - **v.** Install the coaxial bulkhead adapter in the right pressure bulkhead pass-through panel with the NAS1149F0832P washer (refer to Figure 1).
- **b.** An alternate means of compliance with the step is to install an adapter that fits in the existing 0.50” hole. FAA field approval will be required and is the responsibility of the aircraft owner to obtain.

26. Connect the aft NAV antenna coaxial cable (HK23005320) to the forward and aft sides of the aft pressure bulkhead coaxial bulkhead adapter.

27. Install the pressure bulkhead access panel (refer to the E1000 AMM PN SK05000000, chapter 21-30).

28. Put the baggage floor closeout panel in position. Install the bolts and washers that attach the baggage floor closeout panel the baggage floor panel.

29. Install the cargo floor bucket (refer to the E1000 AMM PN SK05000000, chapter 25-50).

30. Install the aft left lower passenger compartment finish panel (refer to the E1000 AMM PN SK05000000, chapter 25-20).

31. Install the aft pressure bulkhead finish panel (refer to the E1000 AMM PN SK05000000, chapter 25-50).

32. Install the cargo net (refer to the E1000 AMM PN SK05000000, chapter 25-50).

33. Repeat steps (6.1 - 6.11).

- **a.** If the test passes, no further action is required.
- **b.** If the test fails, proceed to the next step.

Epic Aircraft, LLC ◆ 22590 Nelson Road ◆ Bend OR 97701
Phone: 541-318-8849 ◆ Fax: 541-382-5125 ◆ Web: www.epicaircraft.com

34. Remove access panel 4LE from the left vertical stabilizer (refer to the E1000 AMM PN SK05000000, chapter 6-00.

35. Perform the following actions to reroute the left and right NAV antenna coax cables in the vertical stabilizer:

a. Install three (3) new cable tie mounts to move the NAV cable coax cables away from the magnetometer wire harness (refer to Figure 3).

NOTE: Use Devcon Plastic Welder or Plastic Welder 2 in accordance with the manufacturer's instructions to install the new cable tie mounts.

b. After the adhesive has cured, use cable ties to attach the left and right NAV antenna coax cables to the cable tie mounts.

36. Install access panel 4LE (refer to the E1000 AMM PN SK05000000, chapter 6-00).

37. Repeat steps (6.1 - 6.11).

a. If the test passes, no further action is required.

b. If the test fails, contact Epic Aircraft for disposition.

38. Set the BATT 1 and BATT 2 switches to OFF.

39. Remove all external electrical power from the airplane (refer to Epic E1000 Aircraft Maintenance Manual, PN SK05000000, chapter 24-40

Epic Aircraft, LLC ◆ 22590 Nelson Road ◆ Bend OR 97701
Phone: 541-318-8849 ◆ Fax: 541-382-5125 ◆ Web: www.epicaircraft.com

Figure 1: Magnetometer Interference Test

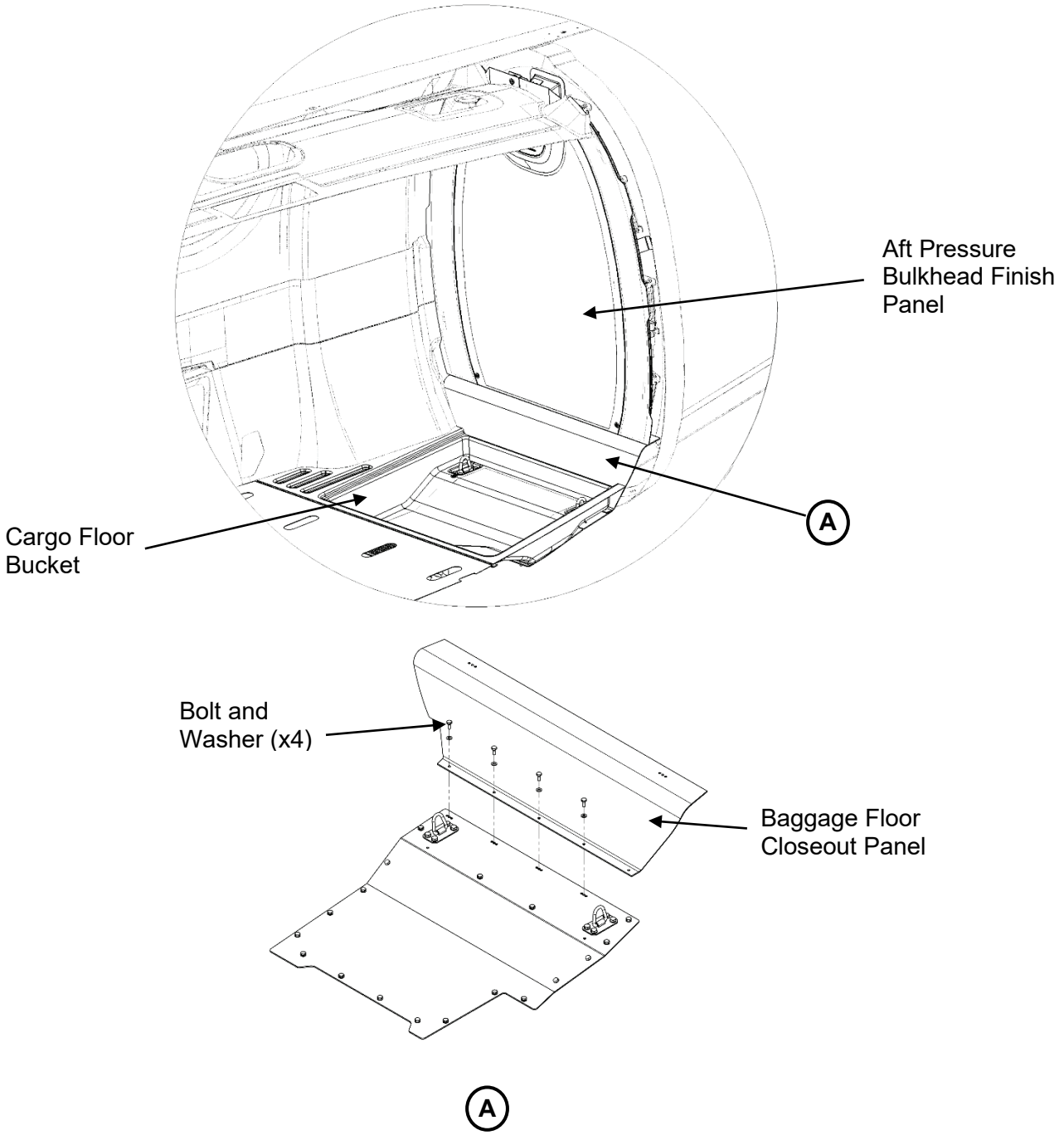

Epic Aircraft, LLC ◆ 22590 Nelson Road ◆ Bend OR 97701
Phone: 541-318-8849 ◆ Fax: 541-382-5125 ◆ Web: www.epicaircraft.com

Figure 2: Magnetometer Interference Test

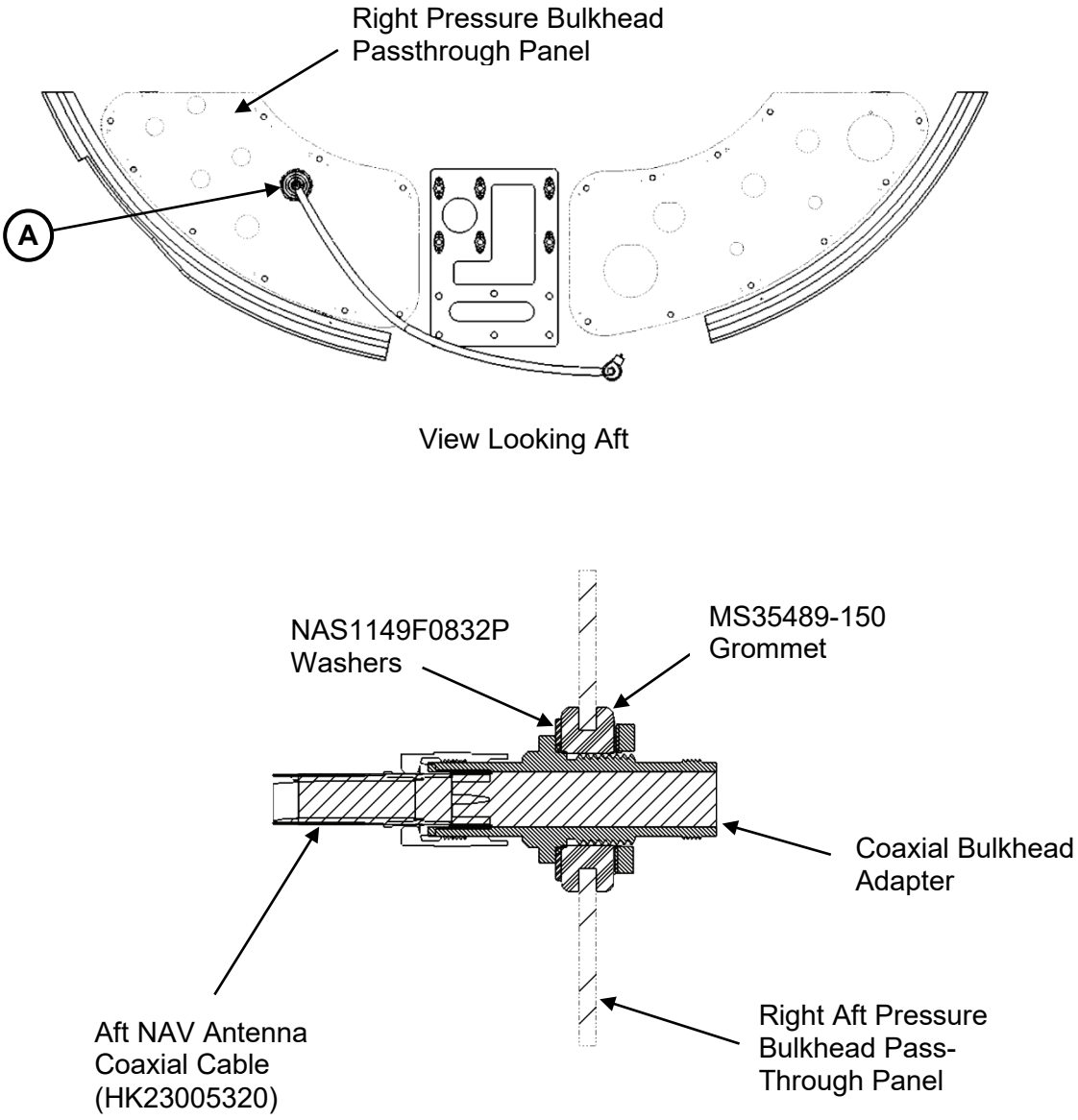

Epic Aircraft, LLC ◆ 22590 Nelson Road ◆ Bend OR 97701
Phone: 541-318-8849 ◆ Fax: 541-382-5125 ◆ Web: www.epicaircraft.com

Figure 3: Magnetometer Interference Test

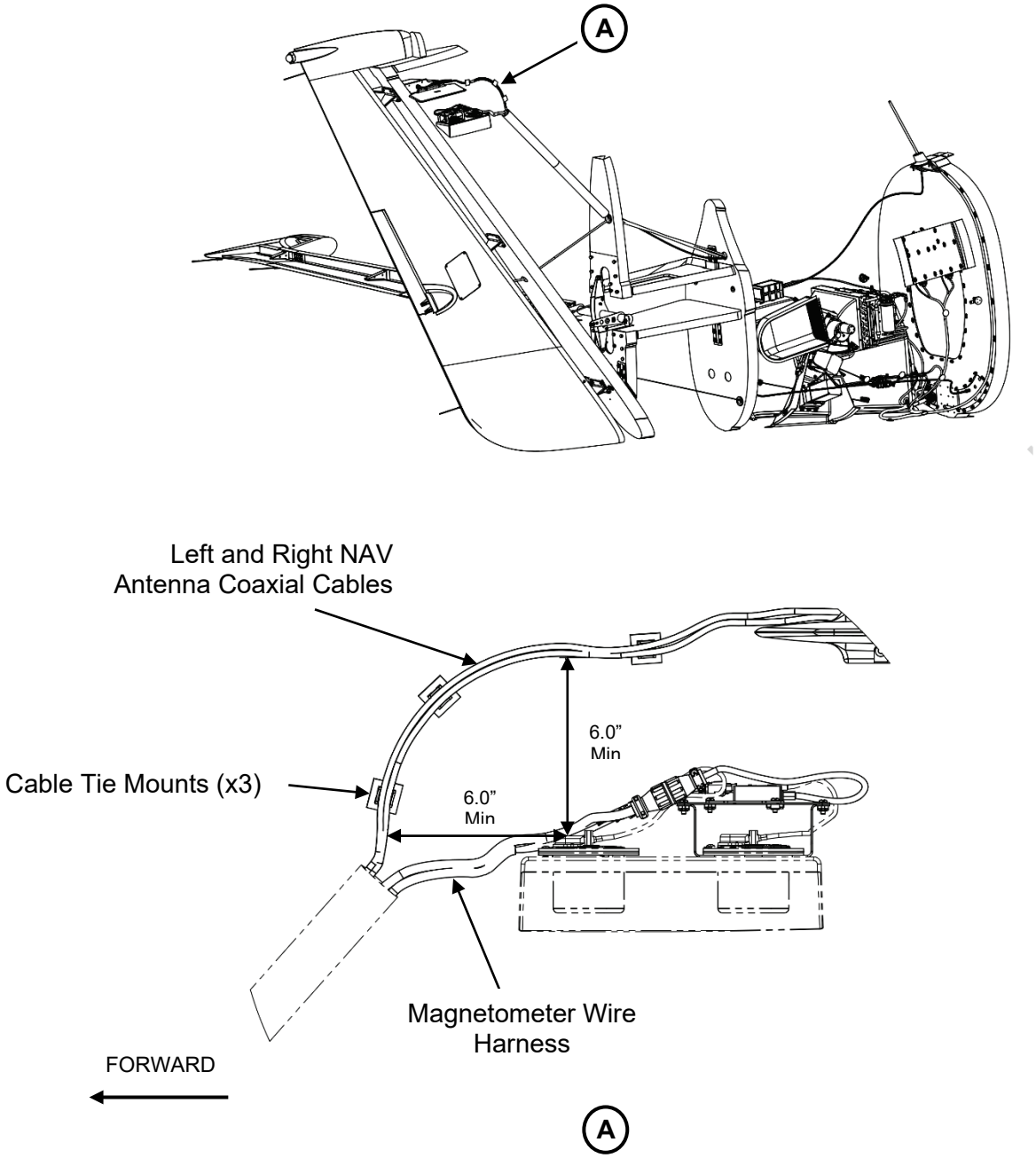

Epic Aircraft, LLC ◆ 22590 Nelson Road ◆ Bend OR 97701
Phone: 541-318-8849 ◆ Fax: 541-382-5125 ◆ Web: www.epicaircraft.com

7 WEIGHT AND BALANCE:

Negligible

8 PUBLICATIONS AFFECTED:

N/A

9 RECORD COMPLIANCE:

Make appropriate entry in airplane maintenance records.

Epic Aircraft, LLC ◆ 22590 Nelson Road ◆ Bend OR 97701
Phone: 541-318-8849 ◆ Fax: 541-382-5125 ◆ Web: www.epicaircraft.com

Appendix A: Compliance Letter

Please complete and mail this form to Customersupport@epicaircraft.com

This is to certify that I have completed the work in accordance with the Epic Aircraft, LLC Service Bulletin.

Aircraft Owner Information:
Date: _____ Aircraft Serial Number: _____ Aircraft Reg. Number: _____ Owner's Name: _____
Maintenance Entity Information
Name of Shop Performing the work: _____ Name of Person(s) Performing inspection and/or work: _____ Phone Number: _____ Email: _____