Service Bulletin SB-0028

Epic Aircraft, LLC ◆ 22590 Nelson Road ◆ Bend OR 97701
Phone: 541-318-8849 ◆ Fax: 541-382-5125 ◆ Web: www.epicaircraft.com

Subject: Firewall Blanket Rework

ATA-Code: 71-30

Labor: 10.0 Hours

Effectivity: K003 – K029

Affected Model(s): E1000, E1000 GX

Due: Next scheduled maintenance event.

Compliance: Mandatory

Recurrence: No

1 BACKGROUND AND PURPOSE:

It has been found the firewall blanket fit may be allowing the nose landing gear wheel and/or tire to contact it when retracted.

This Service Bulletin gives directions to trim and refit the firewall blanket and install a redesigned blanket cap, patch, and hoop to prevent further contact between the firewall blanket and nose wheel/tire. If the original revision or revision A was complied with, no further action is required.

2 REFERENCES:

Epic E1000 Aircraft Maintenance Manual P/N SK05000000

3 WARRANTY:

For aircraft under warranty, parts and labor will be covered by Epic Aircraft, LLC if the work is performed within the compliance period and by a properly certificated Airframe and Power Plant mechanic or FAA approved repair station.

4 APPROVAL:

The alteration data provided in this service bulletin is approved by the FAA.

5 REVISION:

A – This revision corrects typographical errors and revises notes to improve clarity. If the original issue of this Service Bulletin was complied with, compliance with revision A is not required.

- Corrected typo in graphics pages 12 and 13. Was PR-1955, is PR-1995.
- Reworded Notes to improve clarity, page 4.
- Added bonding dimension, page 13.
- Corrected notes to allow for the bracket mounting hole that may not be present on all aircraft, page 15 and 16.

B – Corrected SN effectivity. If the original issue or revision A of this Service Bulletin was complied with, compliance with revision B is not required.

Epic Aircraft, LLC ◆ 22590 Nelson Road ◆ Bend OR 97701
Phone: 541-318-8849 ◆ Fax: 541-382-5125 ◆ Web: www.epicaircraft.com

6 TOOLS:

No.	Description	Qty	Epic Aircraft Supplied	Customer Supplied
1.	Common hand tools.	A/R	☐	☒
2.	Hydraulic Aircraft Jacks, 10,000lb capacity.	3	☐	☒
3.	Lifting Pins, PN FK07100001	3	☐	☒
4.	Hydraulic Service Cart, (MIL-PRF-83282 or MIL-PRF-87257) 2500 psi, 3.5 gpm capacity.	1	☐	☒
5.	Die Grinder	1	☐	☒
6.	Calibrated Thermocouple or Infrared Thermometer	1	☐	☒
7.	Spreader Bars	A/R	☐	☒

7 PARTS/MATERIALS:

No.	Part Number	Description	Qty	Epic Aircraft Supplied	Customer Supplied
1.	Devcon Plastic Welder (PN: 14320 or 14385), Devcon Plastic Welder II (PN: 14340 or 14390), or Plexus MA 300 (PN: 30000 or 30500)	Adhesive	A/R	☐	☒
2.	PPG PR-1995 Class B	Firewall Sealant	A/R	☐	☒
3.	-	80 - 150 Grit Aluminum Oxide Sandpaper	A/R	☐	☒
4.	7447	Scotch Brite Pads	A/R	☐	☒
5.	-	Isopropyl Alcohol	A/R	☐	☒
6.	-	150 Grit Aluminum Oxide Die Grinder Wheel	1	☐	☒
7.	PK71301001	Cap, Blanket, Firewall Tunnel	1	☒	☐
8.	PK71300017	Blanket Hoop	1	☒	☐
9.	FK71300016	Blanket Patch, Firewall	1	☒	☐
10.	NAS43DD3-12N	Spacer, Aluminum .214 I.D. x .312 O.D. x .188	1	☒	☐
11.	NAS1351-3H6P	Screw, Socket Head, Drilled Ø .190-32 x .375	2	☒	☐
12.	NAS1351-3H10P	Screw, Socket Head, Drilled Ø .190-32 x .625	2	☒	☐
13.	NAS1149C0316R	Washer, Flat, Cres #10 x .016	4	☒	☐

Epic Aircraft, LLC ◆ 22590 Nelson Road ◆ Bend OR 97701
Phone: 541-318-8849 ◆ Fax: 541-382-5125 ◆ Web: www.epicaircraft.com

8 INSTRUCTIONS:

1. Set the BATT 1 and BATT 2 switches to OFF.
2. Remove all external electrical power from the airplane (refer to Epic E1000 Aircraft Maintenance Manual, PN SK05000000, chapter 24-40).
3. Clean the firewall blanket with isopropyl alcohol and inspect for damage. Make sure to clean any areas that appear to have had contact with the nose wheel or tire. Contact Epic Aircraft if any tears are found.
4. Remove the firewall blanket cap as follows (Refer to Figure 1):
   a. Use a calibrated infrared thermometer or thermocouple to monitor the temperature of the skin.
   b. Separate the blanket from the cap using a plastic spatula or dull plastic putty knife. Take care not to damage the blanket or the fuselage skin during removal.

   CAUTION: Do not exceed 270°F (132°C) skin temperature, damage to the skin may occur. Use extreme care not to damage the fuselage skin or firewall when removing the blanket cap.

   c. Carefully heat the lower flange of the blanket cap with a heat gun. Monitor the skin temperature during this step.
   d. While heating the blanket cap, carefully pry the edge of the blanket cap away from the fuselage skin as the adhesive loses its bond. Do not exceed 10 pounds of force when debonding the blanket cap.
   e. As the adhesive bond breaks down, carefully pull the blanket cap away from the fuselage skin until the blanket cap has been removed.
5. Alternate method for removing the firewall blanket cap:
   a. Mask the edge of the firewall blanket cap to protect the fuselage skin.
   b. Mask the nose landing gear and nose landing gear well to prevent carbon dust contamination.

   WARNING: Breathing carbon fiber dust is harmful. Use appropriate Personal Protective Equipment (PPE) while sanding carbon fiber.

   CAUTION: Use extreme care not to damage the fuselage skin or firewall when removing the blanket cap.

   c. Remove the lower flange of the firewall blanket cap with a 150 grit aluminum oxide grinding wheel. Removal of all the original adhesive is not necessary.

d. Separate the blanket from the cap using a plastic spatula or dull plastic putty knife and remove the rest of the blanket cap. Be careful not to damage the blanket or the fuselage skin during removal.

6. Re-fit the firewall blanket as follows:

CAUTION: Do not cut more than 19" vertically on the blanket.

a. Clean all blanket surfaces within the nose landing gear housing of the firewall with isopropyl alcohol.

b. Using scissors, split the first two layers of the blanket (Refer to Figure 2, Sheet 1 and 2). Cut vertically only enough to remove any bridging of the blanket material.

NOTE: Bridging refers to any area of the blanket material that does not conform to the firewall contour.

NOTE: If there is bridging on the last layer of the blanket, use a razor blade to split the bridging. Take care not to score the material behind the last layer the blanket.

c. Dry fit the split blanket to the firewall surface to verify that the split has eliminated all bridging and that the blanket now properly conforms to the surface of the firewall.

NOTE: If bridging remains, continue to split the blanket. Do not exceed a cut length of 19" (the blanket patch must overlap the cut at least 0.50").

NOTE: After splitting the blanket, if the two sides overlap anywhere along the cut edge, trim away the excess blanket material so the original blanket material does not overlap itself.

d. Conform the blanket to the surface of the firewall using PR-1995 as an adhesive to hold it in place. Support the blanket with spreader bars to keep it in position.

e. Make sure the blanket is flush with bottom surface of fuselage. Trim the firewall blanket with a razor blade as needed.

f. Seal the trimmed edge of the blanket using PR-1995 Class B firewall sealant.

NOTE: Be careful not to cut off too much of the blanket. The blanket must be flush with the fuselage skin.

g. Dry fit the patch first to make sure the reworked area is covered.

7. Install the new blanket cap and patch as follows:

a. Lightly sand the bonding surfaces of the fuselage and blanket cap with 80 to 150 grit sandpaper or Scotch Brite 7447 pads. Use care not to damage the Lightning Strike Protection (LSP) layer or reinforcing fibers.

Epic Aircraft, LLC ◆ 22590 Nelson Road ◆ Bend OR 97701
Phone: 541-318-8849 ◆ Fax: 541-382-5125 ◆ Web: www.epicaircraft.com

b. Remove all abrading dust with a vacuum.

c. Clean all bonding surfaces with isopropyl alcohol and allow it to dry completely.

NOTE: Thoroughly wet the bonding surface with isopropyl alcohol then immediately wipe with a clean dry lint free cloth, using a single stroke motion while rolling the wipe away from the surface. After each swipe, turn the drying cloth to a clean surface. Do not reuse a contaminated drying cloth surface.

NOTE: If more than 30 minutes have elapsed since the solvent wash was completed on the bonding surfaces, the surfaces must be re-wiped with Isopropyl Alcohol. After each swipe, turn the drying cloth to a clean surface. If more than eight hours have elapsed since the surface preparation operation was completed, the bonding surfaces must be re-abraded with sandpaper or Scotch-Brite and solvent-washed before the application of adhesives.

d. Apply PR-1995 to entire back surface (non-aluminized side) of the patch (PN: FK71300016) and place it over the top of the cut on the modified firewall blanket. Position it such that the bottom of the patch is flush with the bottom of the fuselage and centered over the modified firewall blanket cut (Refer to Figure 2, Sheet 3).

e. Support the firewall blanket and patch with spreader bars.

NOTE: Use as many spreader bars as possible to keep the blanket flush to the firewall.

f. Apply Devcon adhesive to the bonding surface of the blanket cap or the fuselage in accordance with the manufacturer's instructions (Refer to Figure 3, Sheet 1).

g. Apply PPG firewall sealant to the vertical flange of the blanket cap or the bonding area of the firewall blanket (PN: PK71301001) (Refer to Figure 3, Sheet 1).

h. Install the blanket cap and wipe away any excess adhesive (Refer to Figure 3, Sheet 2). Make sure there are no gaps in the adhesive around the perimeter.

i. Support the firewall blanket and blanket cap with spreader bars while they cure.

j. Allow the adhesives to cure:

- **i.** Devcon Plastic Welder/Plastic Welder II: Application time is 4 – 20 minutes. Fixturing can be removed in 15 – 45 minutes. Full cure in 24 hours.
- **ii.** PPG PR-1995 Class B: Application time is 2 hours. Full cure in 24 hours.

Epic Aircraft, LLC ◆ 22590 Nelson Road ◆ Bend OR 97701
Phone: 541-318-8849 ◆ Fax: 541-382-5125 ◆ Web: www.epicaircraft.com

8. Apply touchup paint as needed to the fuselage around the perimeter of the lower flange as needed (refer to the Epic E1000 Airframe Maintenance Manual, PN SK05000000, Chapter 51-20).
9. Install the blanket hoop as follows:
    a. Unsnap the blanket to gain access to the underlying hardware, refer to (Refer to Figure 4, Sheet 1).
    b. Remove the hardware shown in Figure 4, Sheet 1.
    c. Put the blanket hoop (PN: PK71300017) in position.
    d. Install the new hardware as shown in Figure 4, Sheet 2.
    e. Make sure the blanket hoop is firmly seated against the face of the patch and torque the screws to 20 - 25 in-lbs. (Refer to Figure 4, Sheet 3).
    f. Snap the blanket back in position.
10. Check for clearance as follows:
    a. Raise the airplane using aircraft jacks. Ensure there is sufficient clearance from the ground to retract and extend the landing gear (refer to the Epic E1000 Airframe Maintenance Manual, PN SK05000000, Chapter 7-10).
    b. Connect a ground power unit to the airplane (refer to the Epic E1000 Airframe Maintenance Manual, PN SK05000000, Chapter 24-40).
    c. Connect the hydraulic service cart to the airplane.
    d. Set the BATT 1 and BATT 2 switches to ON.
    e. Turn on the hydraulic service cart.
    f. Retract the landing gear.
    g. Inspect the gap between the nose landing gear wheel/tire and the firewall blanket when the landing gear is retracted. Make sure at least 0.120” clearance exists. Contact Epic Aircraft if adequate clearance is not achieved.
    h. Extend the landing gear.

    CAUTION: Make sure all landing gear have a green down and locked indication in the cockpit before lowering the aircraft.

    i. Turn off the hydraulic service cart.
    j. Set the BATT 1 and BATT 2 switches to OFF.
    k. Disconnect the hydraulic service cart.
    l. Remove all external electrical power to the airplane (refer to the E1000 AMM PN SK05000000, chapter 24-40).
    m. Lower the airplane and remove the aircraft jacks (refer to the E1000 AMM PN SK05000000, chapter 7-10).

Epic Aircraft, LLC ◆ 22590 Nelson Road ◆ Bend OR 97701
Phone: 541-318-8849 ◆ Fax: 541-382-5125 ◆ Web: www.epicaircraft.com

Figure 1: Blanket Cap (Sheet 1 of 2)

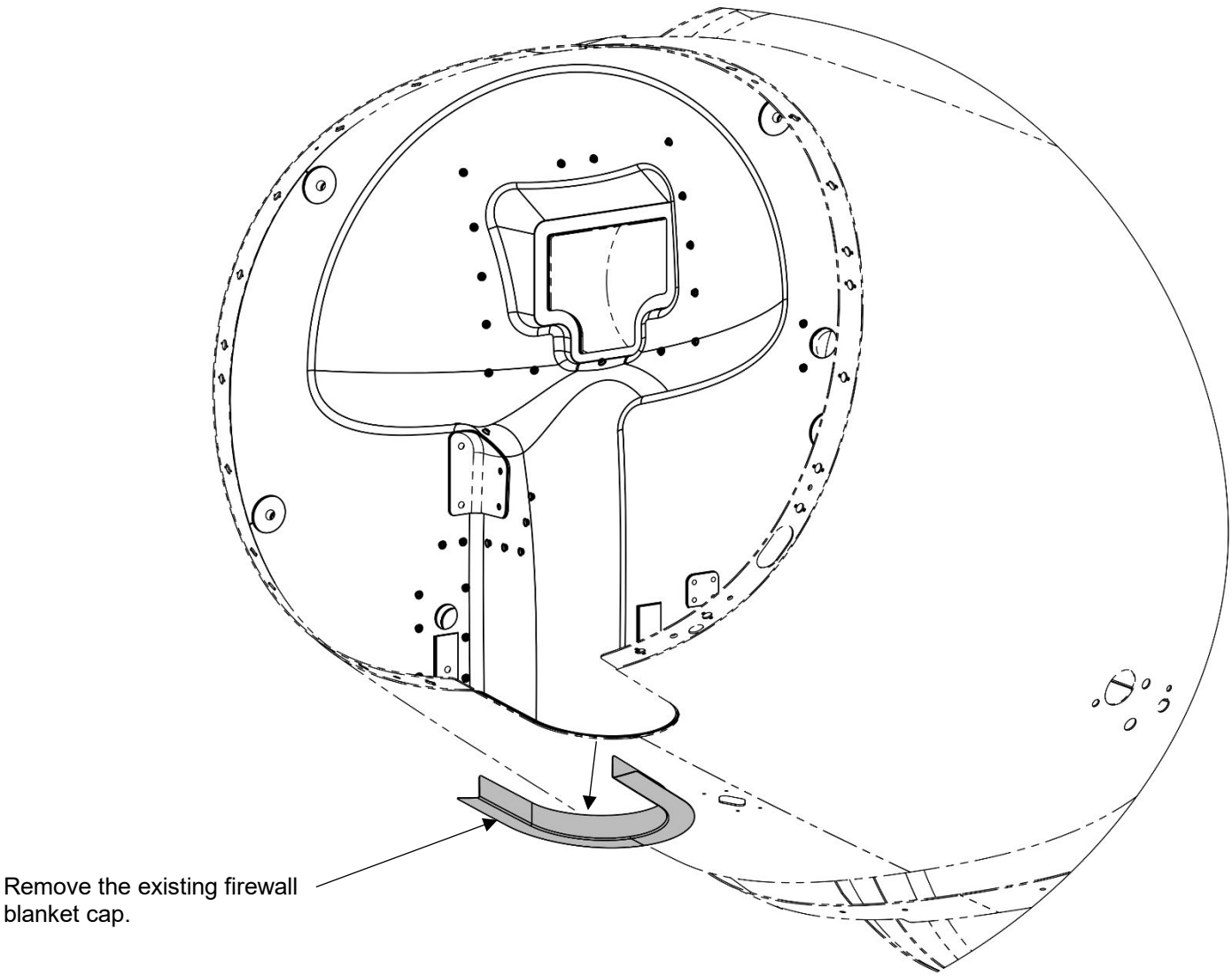

Before Rework

Epic Aircraft, LLC ◆ 22590 Nelson Road ◆ Bend OR 97701
Phone: 541-318-8849 ◆ Fax: 541-382-5125 ◆ Web: www.epicaircraft.com

Figure 1: Blanket Cap (Sheet 2 of 2)

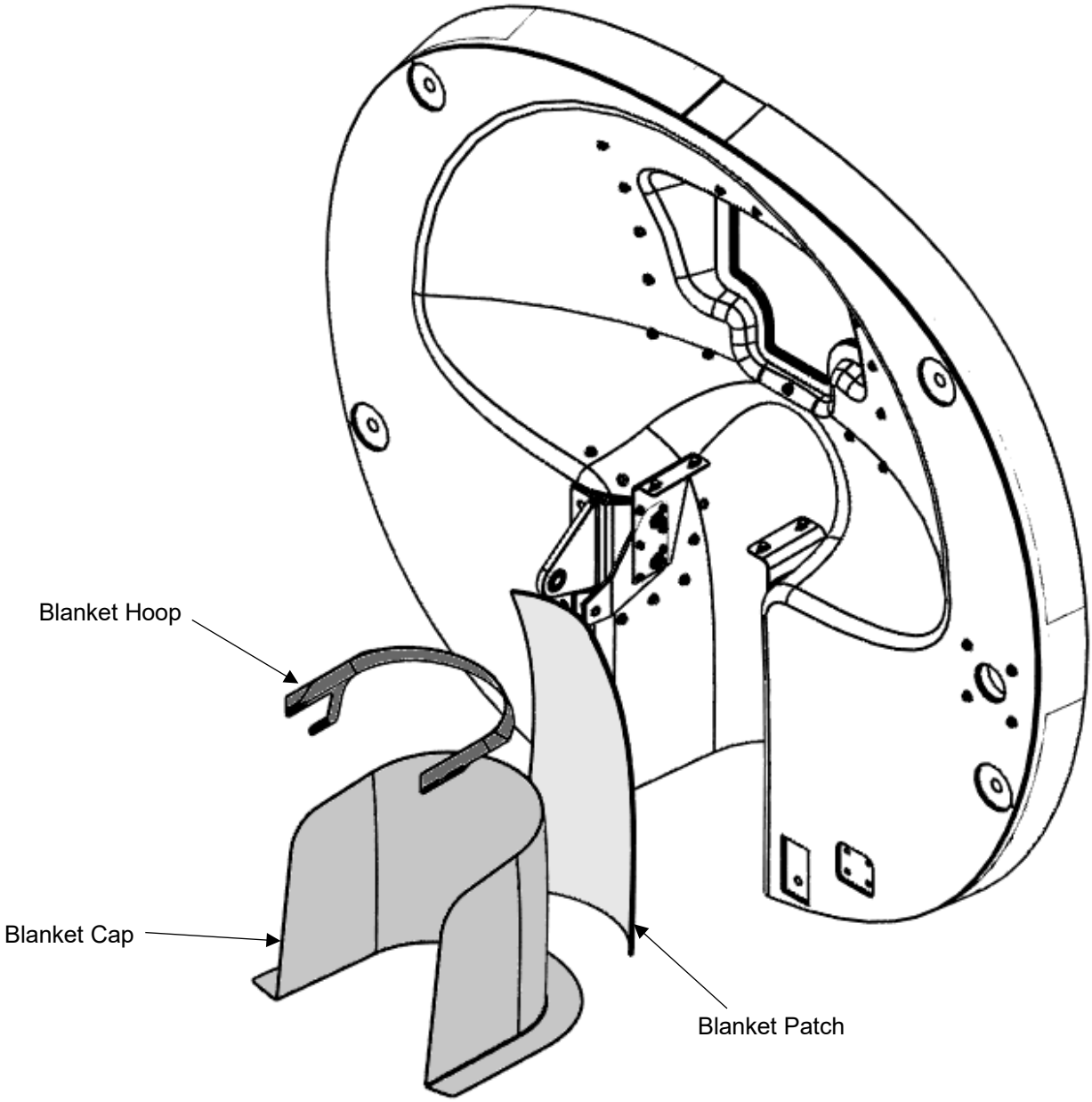

New Components

Epic Aircraft, LLC ◆ 22590 Nelson Road ◆ Bend OR 97701
Phone: 541-318-8849 ◆ Fax: 541-382-5125 ◆ Web: www.epicaircraft.com

Figure 2: Firewall Blanket Rework (Sheet 1 of 4)

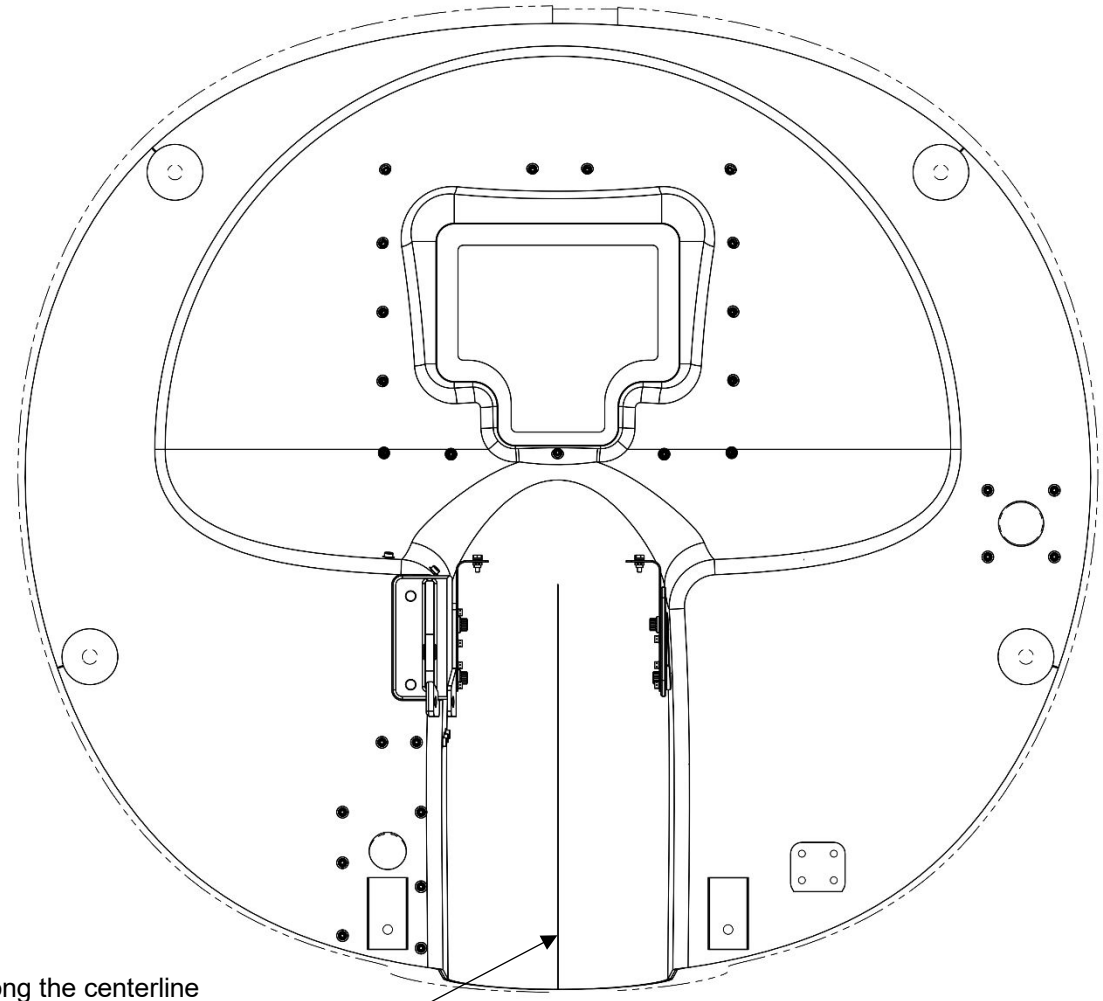

Cut vertically along the centerline of the aircraft through the first two layers of the blanket. If there is bridging in the back layer of the blanket, local splitting of the back layer is allowed in the area(s) bridging. Make sure the split does not exceed 19” vertically (the blanket patch must overlap the cut at least 0.50”).

Epic Aircraft, LLC ◆ 22590 Nelson Road ◆ Bend OR 97701
Phone: 541-318-8849 ◆ Fax: 541-382-5125 ◆ Web: www.epicaircraft.com

Figure 2: Firewall Blanket Rework (Sheet 2 of 4)

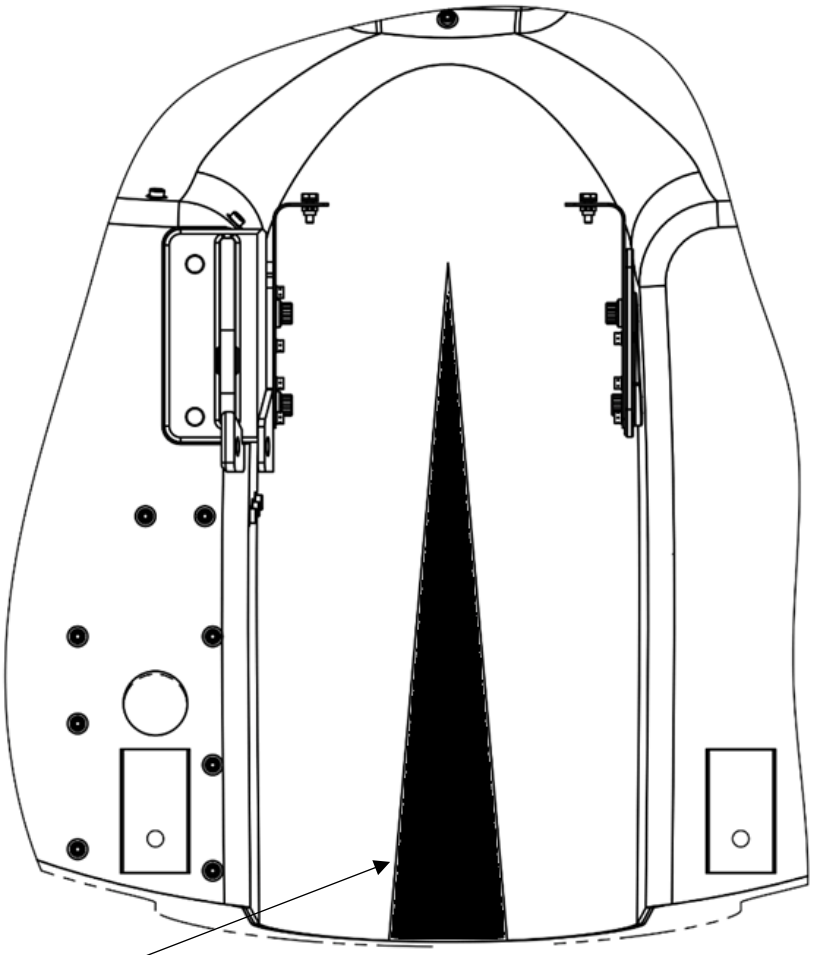

The size of the split will depend on the original fit of the blanket. It is possible for the split to be larger or smaller than shown, or the blanket may overlap in areas. If the blanket does overlap, trim the excess material in the overlap area.

Figure 2: Firewall Blanket Rework (Sheet 3 of 4)



Example of a firewall blanket split.

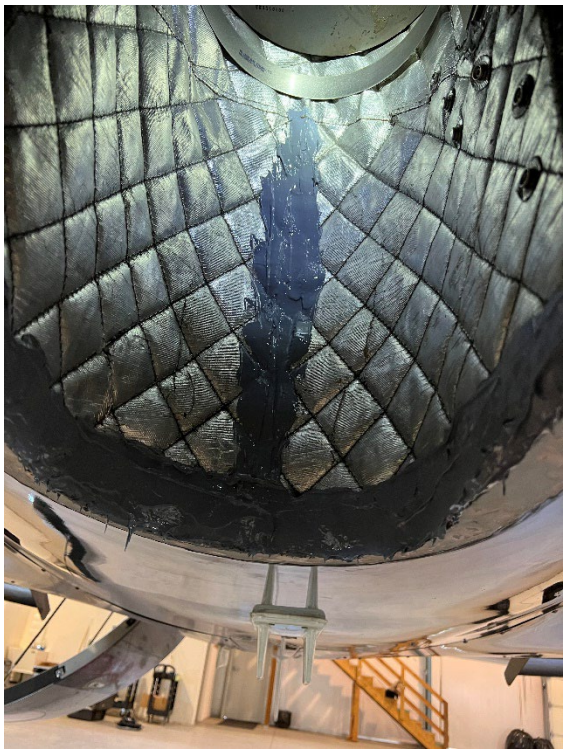

Example of a reworked firewall blanket prior to patch installation.

Epic Aircraft, LLC ◆ 22590 Nelson Road ◆ Bend OR 97701
Phone: 541-318-8849 ◆ Fax: 541-382-5125 ◆ Web: www.epicaircraft.com

Figure 2: Firewall Blanket Rework (Sheet 4 of 4)

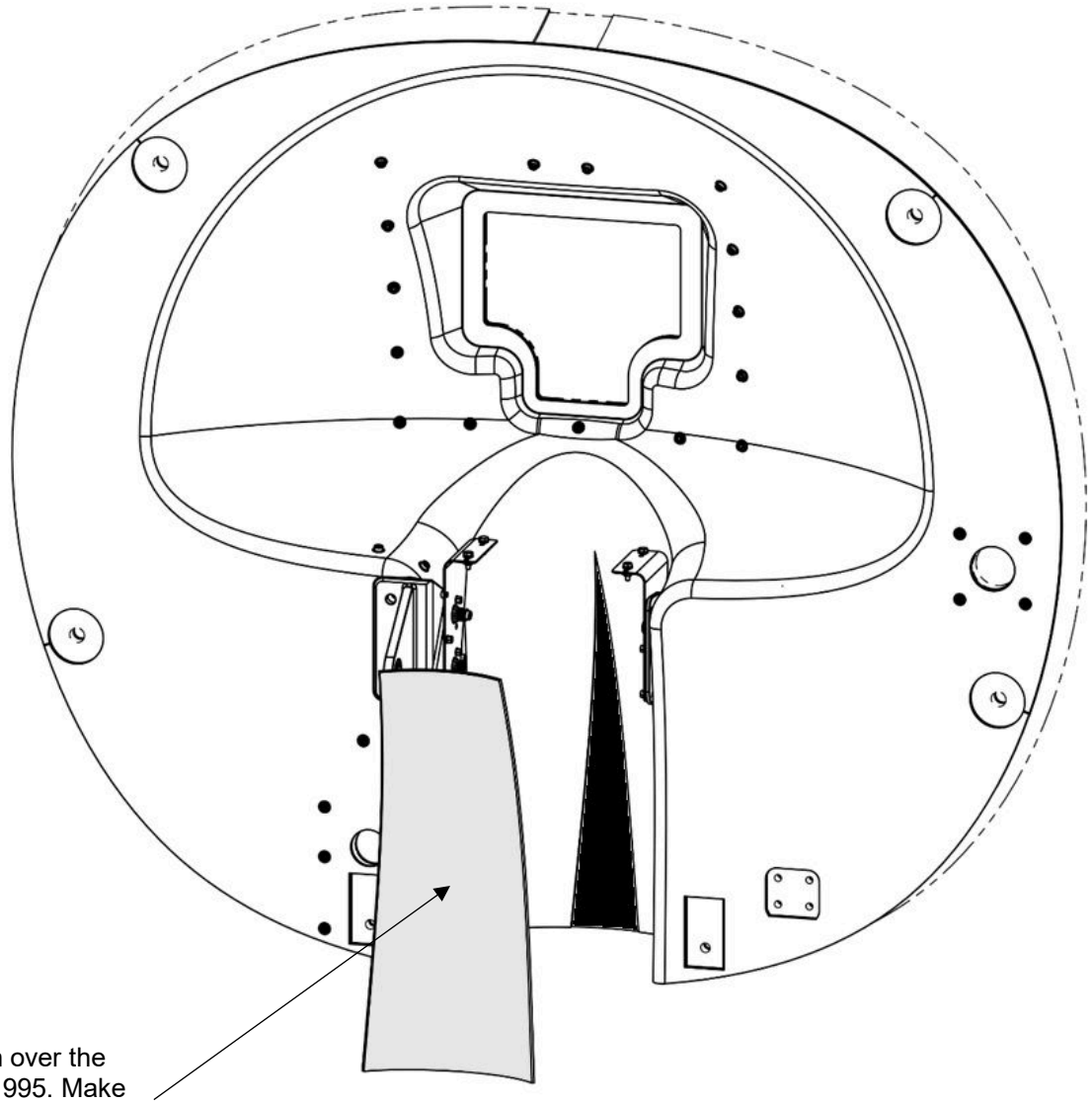

Install the patch over the split using PR-1995. Make sure the patch is flush with the bottom of the fuselage. Trim excess material if needed.

Epic Aircraft, LLC ◆ 22590 Nelson Road ◆ Bend OR 97701
Phone: 541-318-8849 ◆ Fax: 541-382-5125 ◆ Web: www.epicaircraft.com

Figure 3: Blanket Cap Installation (Sheet 1 of 2)

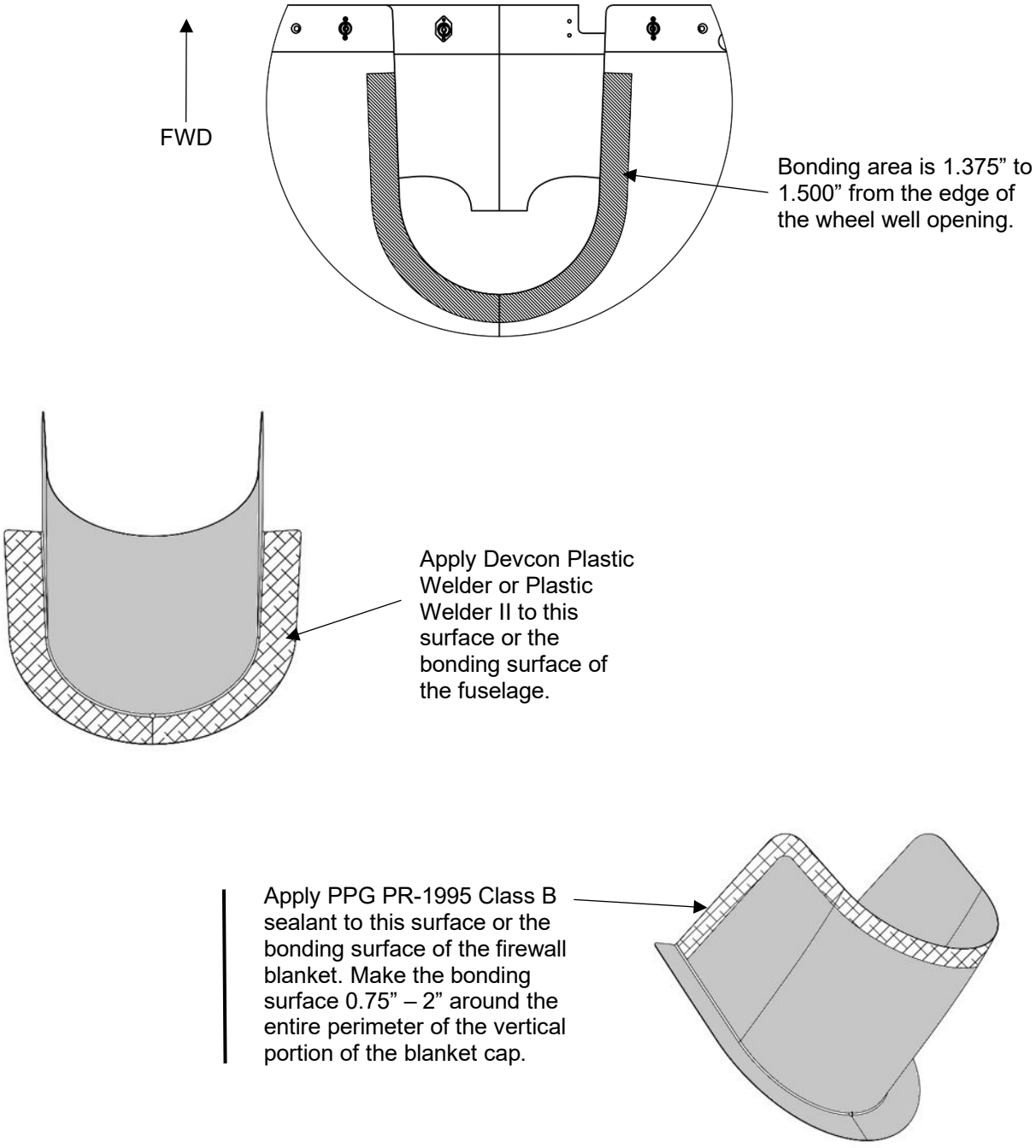

Epic Aircraft, LLC ◆ 22590 Nelson Road ◆ Bend OR 97701
Phone: 541-318-8849 ◆ Fax: 541-382-5125 ◆ Web: www.epicaircraft.com

Figure 3: Blanket Cap Installation (Sheet 2 of 2)

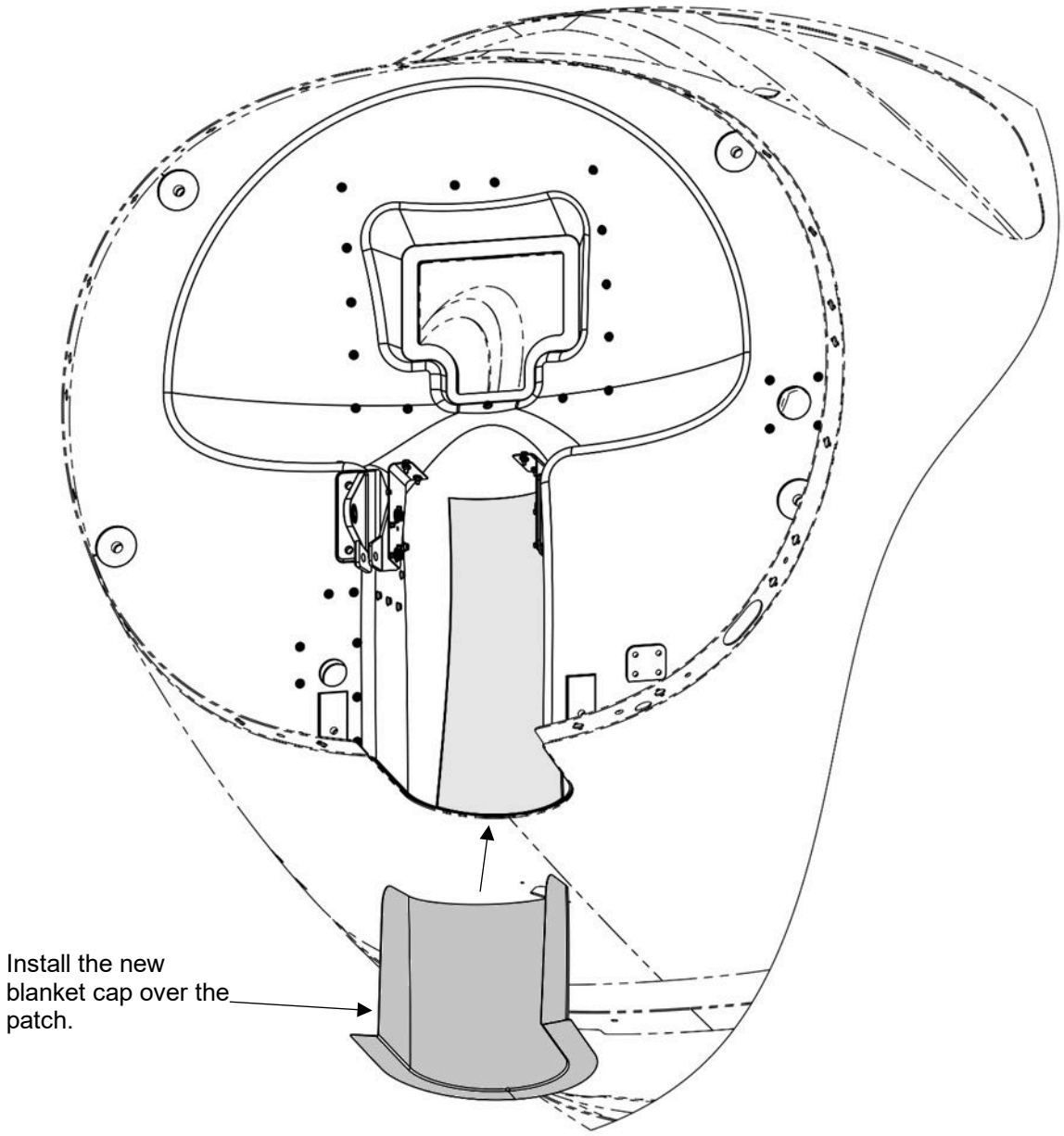

Epic Aircraft, LLC ◆ 22590 Nelson Road ◆ Bend OR 97701
Phone: 541-318-8849 ◆ Fax: 541-382-5125 ◆ Web: www.epicaircraft.com

Figure 4: Blanket Hoop Installation (Sheet 1 of 4)

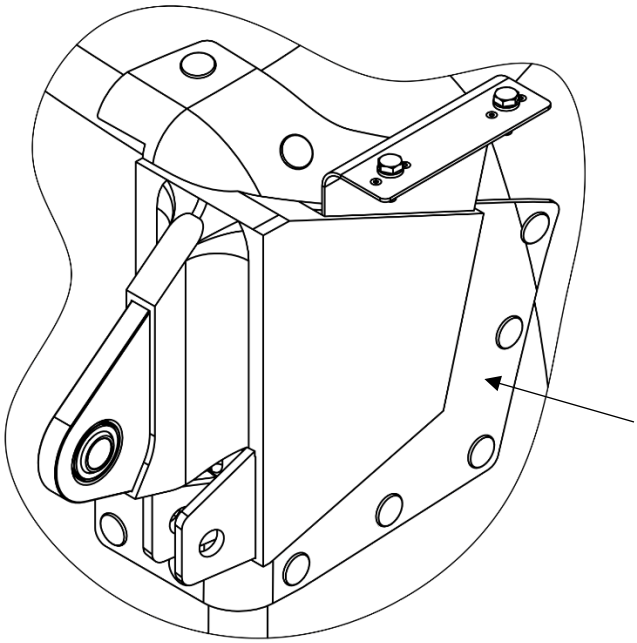

Right Side Shown, Left Side Opposite

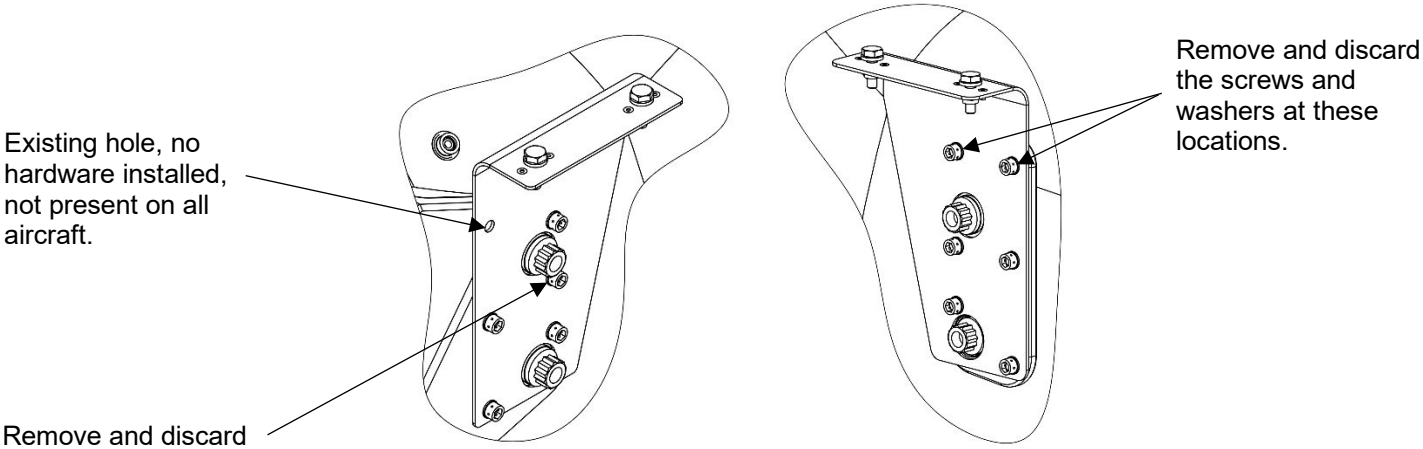

Right Side **Left Side**

Epic Aircraft, LLC ◆ 22590 Nelson Road ◆ Bend OR 97701
Phone: 541-318-8849 ◆ Fax: 541-382-5125 ◆ Web: www.epicaircraft.com

Figure 4: Blanket Hoop Installation (Sheet 2 of 4)

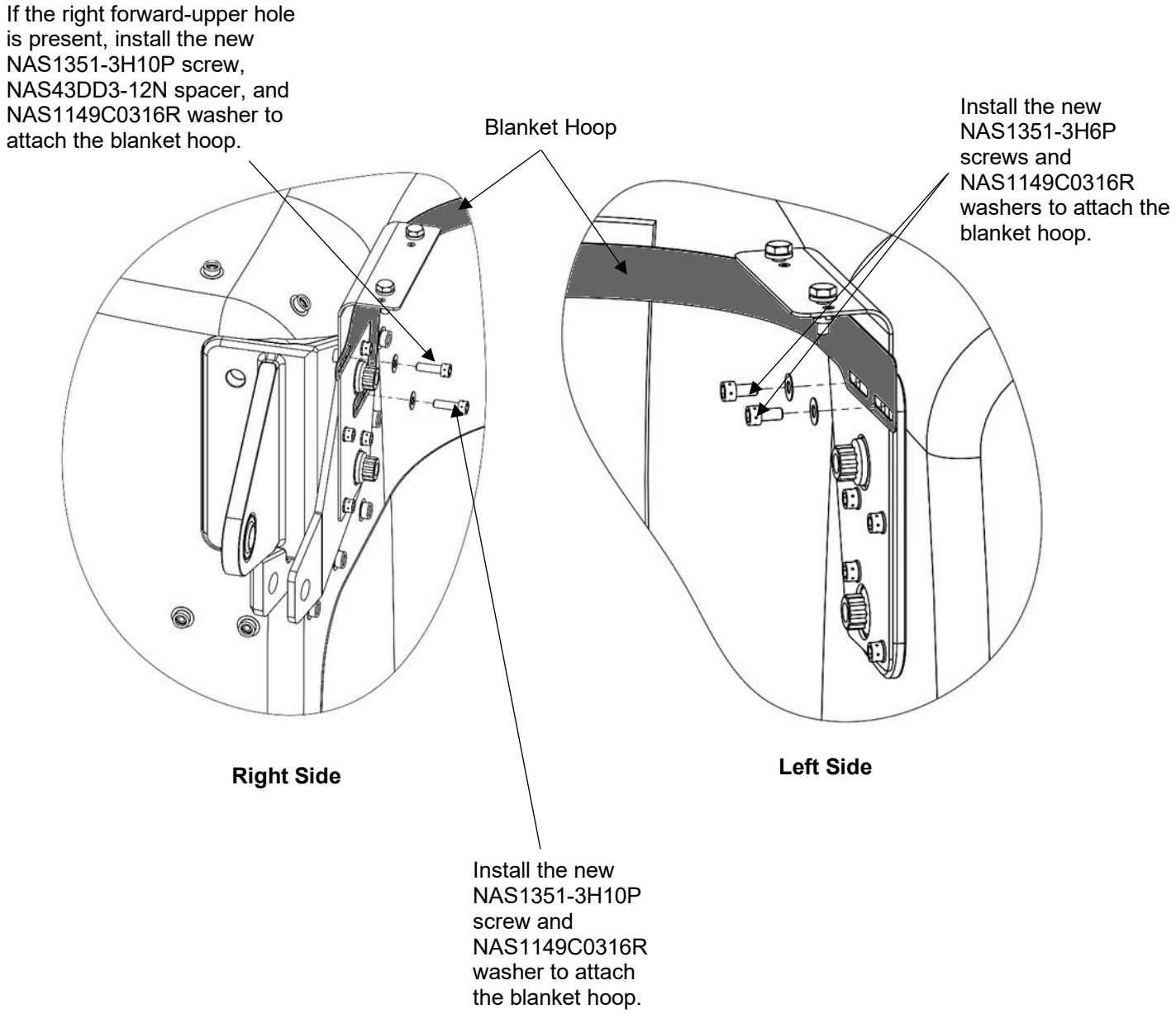

Epic Aircraft, LLC ◆ 22590 Nelson Road ◆ Bend OR 97701
Phone: 541-318-8849 ◆ Fax: 541-382-5125 ◆ Web: www.epicaircraft.com

Figure 4: Blanket Hoop Installation (Sheet 3 of 4)



Example of a completed installation shown supported for curing.

Epic Aircraft, LLC ◆ 22590 Nelson Road ◆ Bend OR 97701
Phone: 541-318-8849 ◆ Fax: 541-382-5125 ◆ Web: www.epicaircraft.com

Figure 4: Blanket Hoop Installation (Sheet 4 of 4)

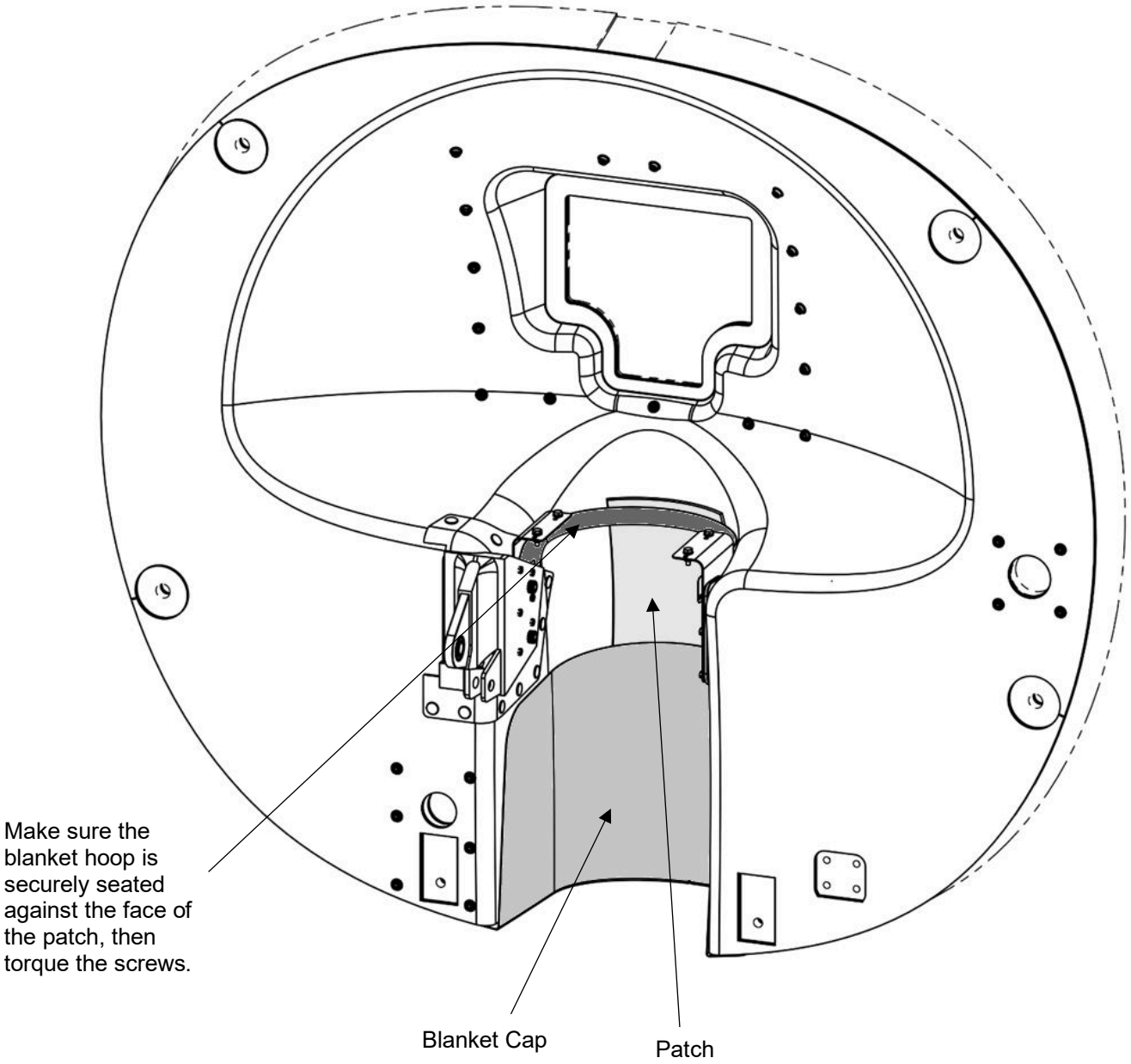

After Rework

Epic Aircraft, LLC ◆ 22590 Nelson Road ◆ Bend OR 97701
Phone: 541-318-8849 ◆ Fax: 541-382-5125 ◆ Web: www.epicaircraft.com

9 WEIGHT AND BALANCE:

Negligible

10 PUBLICATIONS AFFECTED:

Epic E1000 Aircraft Maintenance Manual P/N SK05000000
Epic E1000 Illustrated Parts Catalog P/N SK05000004

11 RECORD COMPLIANCE:

Make appropriate entry in airplane maintenance records.

Epic Aircraft, LLC ◆ 22590 Nelson Road ◆ Bend OR 97701
Phone: 541-318-8849 ◆ Fax: 541-382-5125 ◆ Web: www.epicaircraft.com

Appendix A: Compliance Letter

Please complete and mail this form to Customersupport@epicaircraft.com

This is to certify that I have completed the work in accordance with the Epic Aircraft, LLC Service Bulletin.

Aircraft Owner Information:
Date: _____ Aircraft Serial Number: _____ Aircraft Reg. Number: _____ Owner's Name: _____
Maintenance Entity Information
Name of Shop Performing the work: _____ Name of Person(s) Performing inspection and/or work: _____ Phone Number: _____ Email: _____