Service Bulletin SB-0037

Epic Aircraft, LLC ◆ 22590 Nelson Road ◆ Bend OR 97701
Phone: 541-318-8849 ◆ Fax: 541-382-5125 ◆ Web: www.epicaircraft.com

Subject: Autopilot Bridle Cable Clamp Hardware Replacement

ATA-Code: 22-11

Labor: 6.0 Hours

Effectivity: K023–K025 and K027–K030

Affected Model(s): E1000 GX

Due: Within the next 10 flight hours.

Compliance: Mandatory

Recurrence: No

1 BACKGROUND AND PURPOSE:

It has been found on affected aircraft that the bolts securing the bridle cable clamps may have been manufactured incorrectly.

This service bulletin provides instructions to replace the bridle cable clamp hardware and verify bridle cable tensions.

2 REFERENCES:

Epic E1000 Airframe Maintenance Manual, PN SK05000000

3 WARRANTY:

For aircraft under warranty, parts and labor will be covered by Epic Aircraft, LLC if the work is performed within the compliance period and at an Authorized E1000 Service Center.

4 APPROVAL:

The engineering aspects of this service document have been shown to comply with the applicable Federal Aviation Regulations and are FAA approved.

5 TOOLS:

No.	Description	Qty	Epic Aircraft Supplied	Customer Supplied
1.	Common hand tools		☐	☒

6 PARTS/MATERIALS:

No.	Part Number	Description	Qty	Epic Aircraft Supplied	Customer Supplied
1.	AN5-6A	Bolt, 5/16-24 x 27/32" Undrilled	16	☒	☒
2.	MS21044N5	Nut, Self-Locking, Steel 5/16-24	16	☒	☒

Epic Aircraft, LLC ◆ 22590 Nelson Road ◆ Bend OR 97701
Phone: 541-318-8849 ◆ Fax: 541-382-5125 ◆ Web: www.epicaircraft.com

7 INSTRUCTIONS:

1. Make sure that the BATT 1 and BATT 2 switches are set to OFF.
2. Make sure that all external electrical power to the airplane is disconnected.
3. Gain access to the roll servo as follows (refer to Figure 1):
    a. Remove the pilot seat (refer to Epic E1000 Airframe Maintenance Manual, PN SK05000000 Chapter 25-10).
    b. Remove the carpet from the pilot foot well (refer to Epic E1000 Airframe Maintenance Manual, PN SK05000000 Chapter 25-10).
    c. Remove access panel 3LC (refer to Epic E1000 Airframe Maintenance Manual, PN SK05000000 Chapter 6).
4. Gain access to the pitch, yaw, and pusher servos as follows (refer to Figure 1):
    a. Remove the pressure bulkhead access panel (refer to Epic E1000 Airframe Maintenance Manual, PN SK05000000 Chapter 21-30).
5. Perform the following steps at each bridle cable clamp on the roll, pitch, yaw, and pusher servos (8 clamps total, refer to Figure 2):
    a. Inspect the bridle cable clamp hardware.
        i. If AN-3 bolts are used on the clamp, no action is required on that clamp.
        ii. If AN-5 bolts are used on the clamp, proceed to the next step.
    b. Tighten one fastener set on the bridle cable clamp to 225 in-lbs to minimize clamp movement.
    c. Remove the other bolt, washer, and nut from the bridle cable clamp. Retain the washer and discard the bolt and nut.

    NOTE: Remove the fasteners individually to minimize any potential cable rigging.

    CAUTION: Make sure the replacement bolts are not from CGI Fasteners lot: 34856

    d. Install the new bolt and nut with the retained washer and torque to 60 in-lbs.
    e. Make sure the hardware is fully seated against the clamp and will NOT rotate by hand.
        i. If the hardware can be rotated manually, discard the bolt and nut and begin again at step (5.d).
        ii. If the hardware cannot be rotated by hand apply an additional torque of 125 – 135 in-lbs for a total torque on the fastener of 185 – 195 in-lbs.
    f. Remove the fastener tightened in step (5.b).

Epic Aircraft, LLC ◆ 22590 Nelson Road ◆ Bend OR 97701
Phone: 541-318-8849 ◆ Fax: 541-382-5125 ◆ Web: www.epicaircraft.com

g. Install the new bolt and nut with the retained washer and torque to 60 in-lbs.
h. Make sure the hardware is fully seated against the clamp and will NOT rotate by hand.
    i. If the hardware can be rotated manually, discard the bolt and nut and begin again at step (5.g).
    ii. If the hardware cannot be rotated by hand apply an additional torque of 125 – 135 in-lbs for a total torque on the fastener of 185 – 195 in-lbs.
i. Perform these steps at all (8) bridle cable clamps, removing one fastener set at a time. All bridle cable clamp bolts and nuts must be replaced.

6. Make sure the bridle cables are correctly tensioned (refer to Epic E1000 Airframe Maintenance Manual, PN SK05000000 Chapter 22-11).

7. Install all access items on the roll servo as follows:
    a. Install access panel 3LC (refer to Epic E1000 Airframe Maintenance Manual, PN SK05000000 Chapter 6).
    b. Install the carpet for the pilot foot well (refer to Epic E1000 Airframe Maintenance Manual, PN SK05000000 Chapter 25-10).
    c. Install the pilot seat (refer to Epic E1000 Airframe Maintenance Manual, PN SK05000000 Chapter 25-10).

8. Install the pressure bulkhead access panel (refer to Epic E1000 Airframe Maintenance Manual, PN SK05000000 Chapter 21-30).

Epic Aircraft, LLC ◆ 22590 Nelson Road ◆ Bend OR 97701
Phone: 541-318-8849 ◆ Fax: 541-382-5125 ◆ Web: www.epicaircraft.com

FIGURE 1: Bridle Cable Hardware Replacement

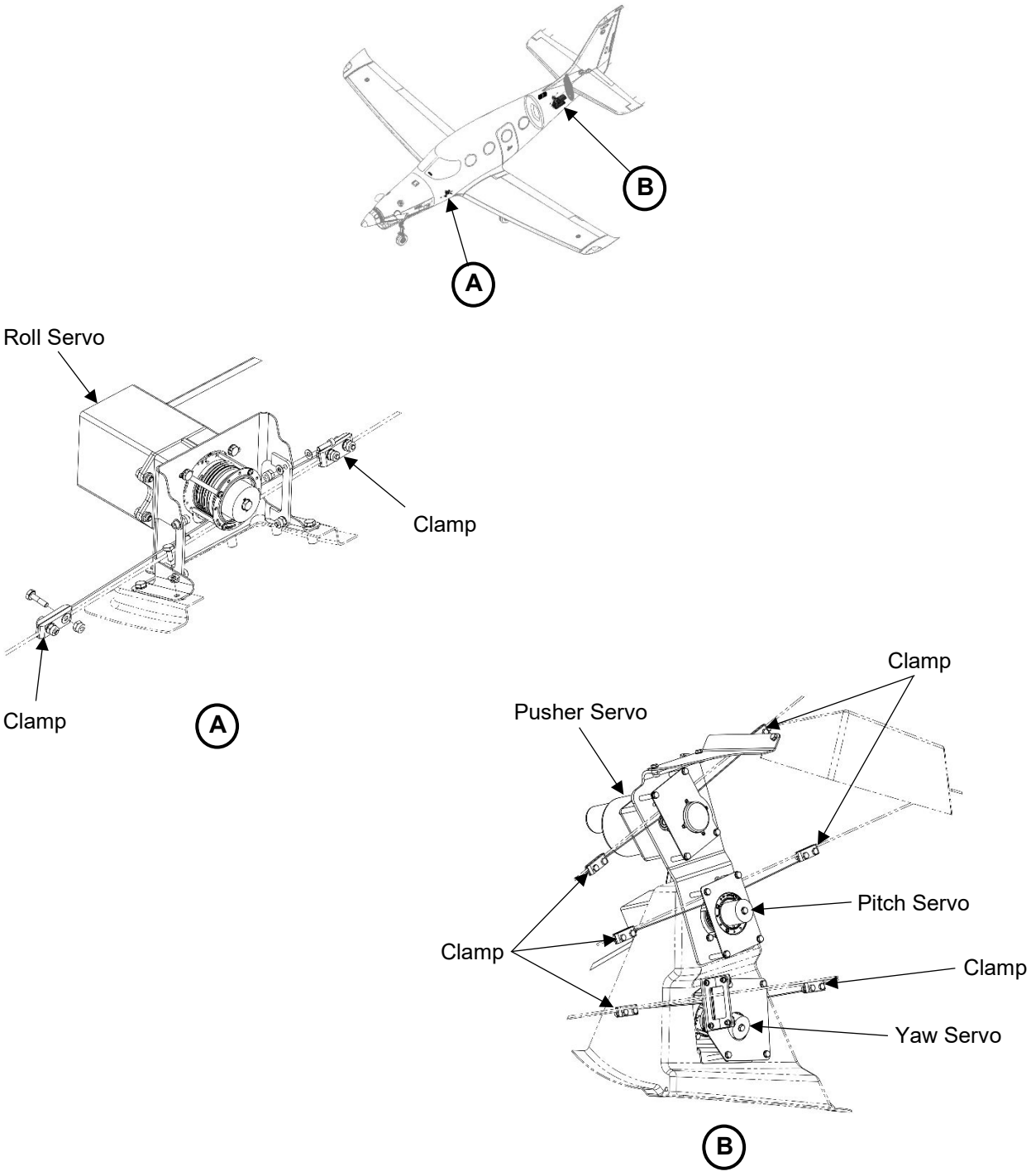

Epic Aircraft, LLC ◆ 22590 Nelson Road ◆ Bend OR 97701
Phone: 541-318-8849 ◆ Fax: 541-382-5125 ◆ Web: www.epicaircraft.com

FIGURE 2: Bridle Cable Clamp (Typical)

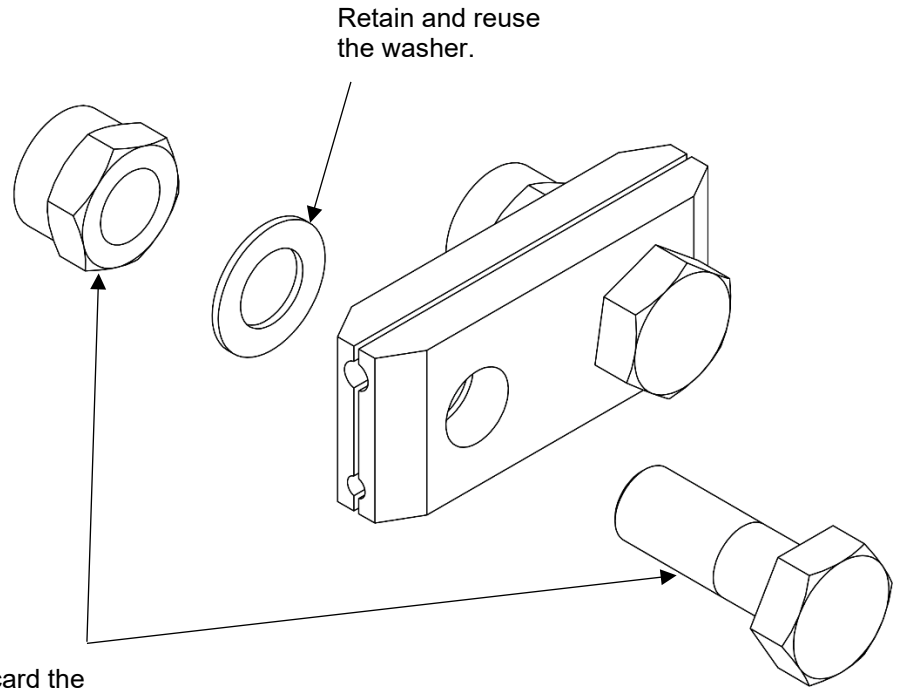

Epic Aircraft, LLC ◆ 22590 Nelson Road ◆ Bend OR 97701
Phone: 541-318-8849 ◆ Fax: 541-382-5125 ◆ Web: www.epicaircraft.com

8 WEIGHT AND BALANCE:

N/A

9 PUBLICATIONS AFFECTED:

Epic E1000 Airframe Maintenance Manual, PN SK05000000

10 RECORD COMPLIANCE:

Make appropriate entry in airplane maintenance records.

Epic Aircraft, LLC ◆ 22590 Nelson Road ◆ Bend OR 97701
Phone: 541-318-8849 ◆ Fax: 541-382-5125 ◆ Web: www.epicaircraft.com

Appendix A: Compliance Letter

Please complete and mail this form to Customersupport@epicaircraft.com

This is to certify that I have completed the work in accordance with the Epic Aircraft, LLC Service Bulletin.

Aircraft Owner Information:
Date: _____ Aircraft Serial Number: _____ Aircraft Reg. Number: _____ Owner's Name: _____
Maintenance Entity Information
Name of Shop Performing the work: _____ Name of Person(s) Performing inspection and/or work: _____ Phone Number: _____ Email: _____