Service Instruction SI-0016

Technical Portions FAA Approved

Epic Aircraft, LLC ◆ 22590 Nelson Road ◆ Bend OR 97701
Phone: 541-318-8849 ◆ Fax: 541-382-5125 ◆ Web: www.epicaircraft.com

Subject: Flap Actuator Motor Replacement

ATA-Code: 27-50

Labor: 4.0

Effectivity: K014

Affected Model(s): E1000

Due: Before the next flight

Compliance: Recommended ☐ Mandatory ☒

Recurrence: No

1 BACKGROUND AND PURPOSE:

Procedure to replace the flap actuator motor

2 REFERENCES:

Epic E1000 Aircraft Maintenance Manual P/N SK05000000

3 WARRANTY:

For aircraft under warranty, parts and labor will be covered by Epic Aircraft, LLC if the work is performed within the compliance period and by a properly certificated Airframe and Power Plant mechanic or FAA approved repair station.

4 TOOLS:

No.	Description	Qty	Epic Aircraft Supplied	Customer Supplied
1.	Common hand tools		☐	☒
2.			☐	☐
3.			☐	☐
4.			☐	☐
5.			☐	☐

5 PARTS/MATERIALS:

No.	Part Number	Description	Qty	Epic Aircraft Supplied	Customer Supplied
1.	C145-452T	Motor Permanent Magnet	1	☒	☐
2.	B100-06	Universal Assy	1	☒	☐
3.	MS35338-43	Washer	2	☒	☐
4.	MS35650-302	Nut	2	☒	☐
5.				☐	☐

Epic Aircraft, LLC ◆ 22590 Nelson Road ◆ Bend OR 97701

Phone: 541-318-8849 ◆ Fax: 541-382-5125 ◆ Web: www.epicaircraft.com

6 INSTRUCTIONS:

1. Set the BATT 1 and BATT 2 switches to OFF then pull the FLAPS circuit breaker.
2. Remove external electrical power from the airplane (refer to Epic E1000 Aircraft Maintenance Manual, PN SK05000000, chapter 24-40).
3. Remove the airplane belly panels (refer to Chapter 57-10 of the Aircraft Maintenance Manual)
4. Replace the flap actuator motor as described:

1. Remove item 5
2. Verify item 1 installed
3. Replace item 5
4. Replace item 11
5. Torque item 12 to 20-25 IN-LBS

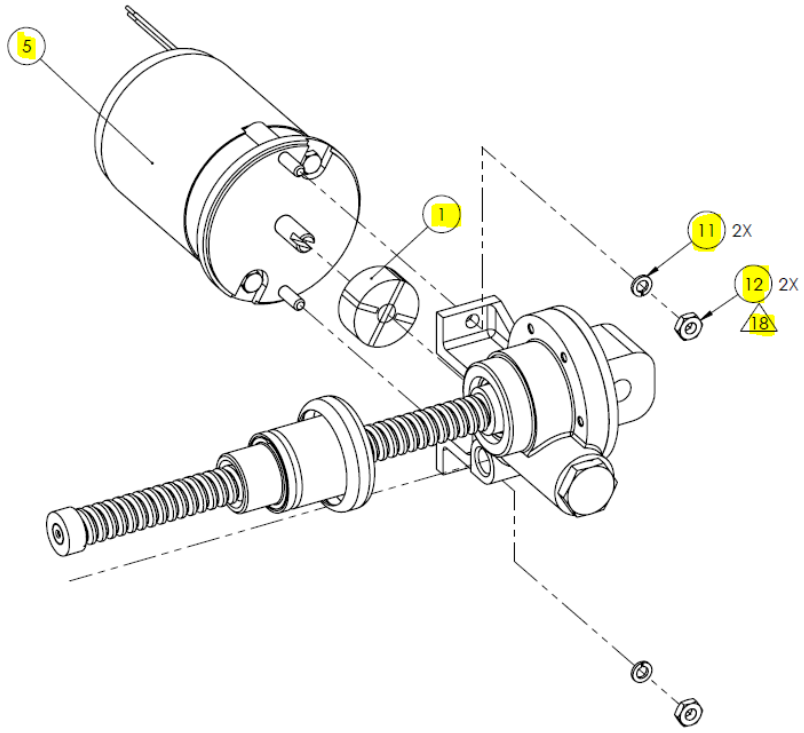

5. Installation of the belly panels is the reverse of removal
6. Perform a functional check of the flaps control system

1. Operate the flaps system from the flight deck controls
2. Confirm the flaps move to the correct position per flaps switch input
3. Reset the FLAPS circuit breaker

Epic Aircraft, LLC ◆ 22590 Nelson Road ◆ Bend OR 97701
Phone: 541-318-8849 ◆ Fax: 541-382-5125 ◆ Web: www.epicaircraft.com

4. Connect a ground power unit to the airplane (refer to Chapter 24-40 of the Aircraft Maintenance Manual)
5. Verify clearance and test operation of the flaps actuator.

7 WEIGHT AND BALANCE:

N/A

8 PUBLICATIONS AFFECTED:

N/A

9 RECORD COMPLIANCE:

Make appropriate entry in airplane maintenance records.

Epic Aircraft, LLC ◆ 22590 Nelson Road ◆ Bend OR 97701
Phone: 541-318-8849 ◆ Fax: 541-382-5125 ◆ Web: www.epicaircraft.com

Appendix A: Compliance Letter

Please complete and mail this form to Customersupport@epicaircraft.com

This is to certify that I have completed the work in accordance with the Epic Aircraft, LLC Service Instruction.

Aircraft Owner Information:
Date: _____ Aircraft Serial Number: _____ Aircraft Reg. Number: _____ Owner's Name: _____
Maintenance Entity Information
Name of Shop Performing the work: _____ Name of Person(s) Performing inspection and/or work: _____ Phone Number: _____ Email: _____