Service Bulletin SB-0038

Epic Aircraft, LLC ◆ 22590 Nelson Road ◆ Bend OR 97701
Phone: 541-318-8849 ◆ Fax: 541-382-5125 ◆ Web: www.epicaircraft.com

Subject: Corrosion Mitigation

ATA-Code: Various

Labor: Varies

Effectivity: K003 and On

Affected Model(s): E1000, E1000 GX

Due: The next annual inspection.

Compliance: Mandatory

Recurrence: Every annual inspection.

1 BACKGROUND AND PURPOSE:

This Service Bulletin gives instructions to address and correct corrosion issues found in various parts of the nose and main landing gear and the flap torque tube.

2 REFERENCES:

Epic E1000 Aircraft Maintenance Manual P/N SK05000000

3 WARRANTY:

For aircraft under warranty, parts and labor will be covered by Epic Aircraft, LLC if the work is performed within the compliance period and by a properly certificated Airframe and Power Plant mechanic or FAA approved repair station. Areas found should be photographed and sent to Epic Customer Service. Warranty Coverage to be determined by Epic Aircraft, LLC based upon pictures provided.

4 APPROVAL:

The engineering aspects of this service document have been shown to comply with the applicable Federal Aviation Regulations and are FAA approved.

5 REVISION:

This is the original issue of this service bulletin.

Epic Aircraft, LLC ◆ 22590 Nelson Road ◆ Bend OR 97701
Phone: 541-318-8849 ◆ Fax: 541-382-5125 ◆ Web: www.epicaircraft.com

6 TOOLS:

No.	Description	Qty	Epic Aircraft Supplied	Customer Supplied
1.	Common Hand Tools	A/R	☐	☒

7 PARTS/MATERIALS:

No.	Part Number	Description	Qty	Epic Aircraft Supplied	Customer Supplied
1.	-	150 – 400 Grit Aluminum Oxide Sandpaper	A/R	☐	☒
2.	-	Corrosion Inhibiting Primer	A/R	☐	☒
3.	-	Polyurethane Paint	A/R	☐	☒
4.	-	Isopropyl Alcohol	A/R	☐	☒
5.	-	Lint Free Cloth	A/R	☐	☒
6.	ACF-50 or CorrosionX Aviation	MIL-PRF-81309 Corrosion Inhibiting Compound	A/R	☐	☒
7.	-	Tap, 1 7/8-16 UN2B	A/R	☐	☒
8.	PK32301011	Nut, Uplock Actuator	A/R	☐	☒
9.	MIL-PRF-83483	Thread Compound, Antiseize	A/R	☐	☒
10.	SF754	Loctite Thread Locker	A/R	☐	☒
11.	-	Lindseed Oil	A/R	☐	☒
12.	-	Paralketone	A/R	☐	☒

Epic Aircraft, LLC ◆ 22590 Nelson Road ◆ Bend OR 97701
Phone: 541-318-8849 ◆ Fax: 541-382-5125 ◆ Web: www.epicaircraft.com

8 INSTRUCTIONS:

1. Set the BATT 1 and BATT 2 switches to OFF.
2. Disconnect external electrical power from the airplane (refer to Epic E1000 Aircraft Maintenance Manual, PN SK05000000, Chapter 24-40).

Note: This Service Bulletin is intended to be performed with the aircraft opened for access for the annual inspection.

3. If corrosion is found on a main landing gear damper piston at the paint line, perform the steps that follow (Refer to Figure 1):
   - **a.** Mask the affected area of the damper piston.
   - **b.** Remove the corrosion using 150 grit aluminum oxide sandpaper.
   - **c.** Finish the repaired area with 400 grit aluminum oxide sandpaper.
   - **d.** Clean the reworked area with isopropyl alcohol using a lint free cloth.
   - **e.** Prime and paint the reworked area with corrosion resistant primer and polyurethane paint (refer to Epic E1000 Aircraft Maintenance Manual, PN SK05000000, Chapter 51-20).

CAUTION: DO NOT USE CHEMCIAL CORROSION REMOVERS.

Note: Make sure the primer and paint are only on the reworked area of the damper piston and do not affect the function of the damper.

4. If corrosion is found on a landing gear actuator piston, perform the steps that follow (Refer to Figure 2):

Note: This repair may be performed on the nose or main landing gear actuator pistons.

   - **a.** Mask the affected area of the actuator piston.
   - **b.** Remove the corrosion using 150 grit aluminum oxide sandpaper.
   - **c.** Finish the repaired area with 400 grit aluminum oxide sandpaper.
   - **d.** Clean the reworked area with isopropyl alcohol using a lint free cloth.

e. Prime and paint the reworked area with corrosion resistant primer and polyurethane paint (refer to Epic E1000 Aircraft Maintenance Manual, PN SK05000000, Chapter 51-20).

CAUTION: DO NOT USE CHEMCIAL CORROSION REMOVERS.

Note: Make sure the primer and paint are only on the reworked area of the actuator piston and do not affect the function of the actuator.

5. If corrosion is found on any uplock actuator nut, perform the steps that follow (Refer to Figure 3):

- **a.** Note the position of the nuts on the uplock actuator(s) prior to removal.
- **b.** Remove the uplock actuator(s) from the airplane (refer to Epic E1000 Aircraft Maintenance Manual, PN SK05000000, Chapter 32-30).
- **c.** Remove the corroded nut(s) from the uplock actuator.
- **d.** Remove the corrosion from the nut threads using a 1 7/8-16 tap.
- **e.** Remove surface corrosion with a stiff bristled brush or with a chemical corrosion remover per AMS 1640 and rinse after application.
- **f.** If the corrosion cannot be removed with the tap, replace the nut with updated type design.
- **g.** Install the new or reworked nut(s) on the actuator using ACF-50 or CorrosionX Aviation corrosion inhibiting compound.
- **h.** Install the uplock actuator(s) and do the adjustment procedure (refer to Epic E1000 Aircraft Maintenance Manual, PN SK05000000, Chapter 32-30).

6. If corrosion is found on the nose landing gear guide channel on the engine mount, perform the steps that follow (Refer to Figure 4):

- **a.** Remove the corrosion and any pitting using 150 grit aluminum oxide sandpaper.

Note: Make sure the guide channel maintains a minimum thickness of 0.085”. Contact Epic Aircraft for disposition if reworking the corrosion exceeds that limit.

- **b.** Finish the repaired area with 400 grit aluminum oxide sandpaper.
- **c.** Clean the reworked area with isopropyl alcohol using a lint free cloth.
- **d.** Prime and paint the reworked area with corrosion resistant primer and polyurethane paint (refer to Epic E1000 Aircraft Maintenance Manual, PN SK05000000, Chapter 51-20).

Epic Aircraft, LLC ◆ 22590 Nelson Road ◆ Bend OR 97701
Phone: 541-318-8849 ◆ Fax: 541-382-5125 ◆ Web: www.epicaircraft.com

7. If corrosion is found the left or right main landing gear actuator mounting bracket, perform the steps that follow (Refer to Figure 5):
    a. Remove bulk or loose corrosion with a stiff bristled brush.
    b. Apply Loctite SF754 to any remaining corrosion.

Note: A fillet should be created along the entire backside of the weld between the bracket's baseplate components and the main brace.

    c. Once Loctite SF754 is cured, apply corrosion inhibiting primer and a two-part polyurethane paint ONLY to the areas where SF 754 was applied.
8. If corrosion is found on the flap torque tube, perform the steps that follow (See Figure 6):
    a. Remove flap torque tube (refer to Epic E1000 Aircraft Maintenance Manual, PN SK05000000, Chapter 27-50).
    b. Corrosion on the interior and exterior of the flap torque tube will be removed through manual abrasion and/or appropriate stiff bristled brush.

Note: a bore brush or similar tool is recommended.

    c. Apply corrosion inhibiting primer and a two-part polyurethane paint to any bare metal on the outside of the tube from corrosion removal.
    d. Coat interior of tube with hot linseed oil, or paralketone.
    e. Dip lap joints in paralketone.
    f. Reinstall flap torque tube (refer to Epic E1000 Aircraft Maintenance Manual, PN SK05000000, Chapter 27-50).

Epic Aircraft, LLC ◆ 22590 Nelson Road ◆ Bend OR 97701
Phone: 541-318-8849 ◆ Fax: 541-382-5125 ◆ Web: www.epicaircraft.com

9 TABLES AND FIGURES:

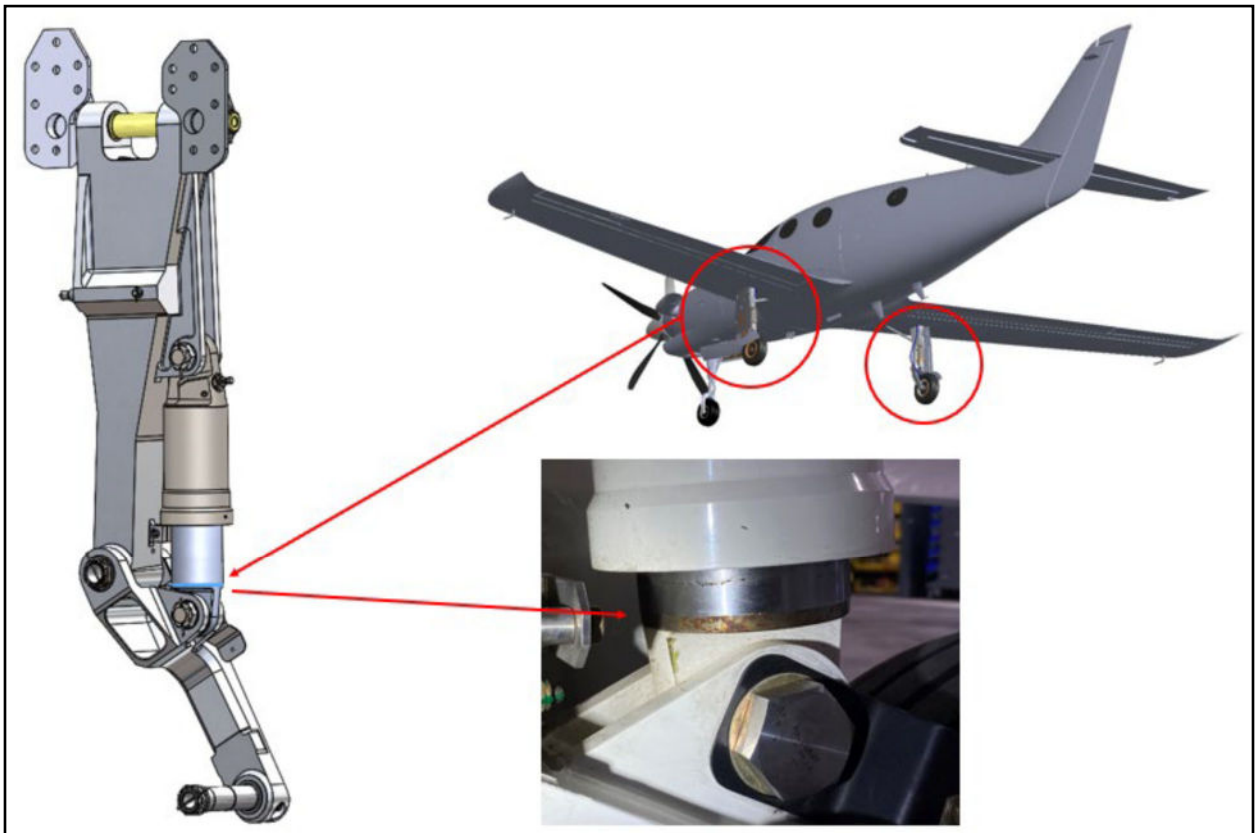

Figure 1: Landing Gear Damper Corrosion

Epic Aircraft, LLC ◆ 22590 Nelson Road ◆ Bend OR 97701
Phone: 541-318-8849 ◆ Fax: 541-382-5125 ◆ Web: www.epicaircraft.com

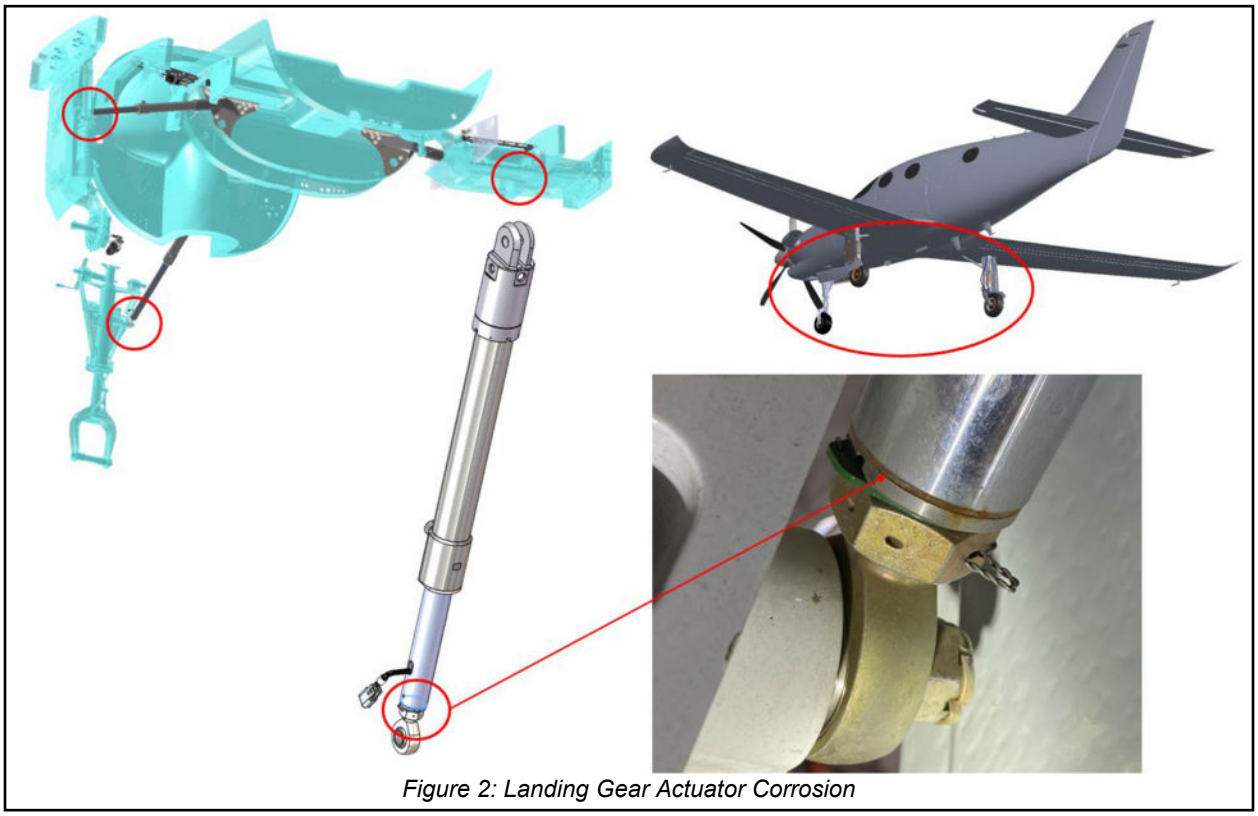

Figure 2: Landing Gear Actuator Corrosion

Epic Aircraft, LLC ◆ 22590 Nelson Road ◆ Bend OR 97701
Phone: 541-318-8849 ◆ Fax: 541-382-5125 ◆ Web: www.epicaircraft.com

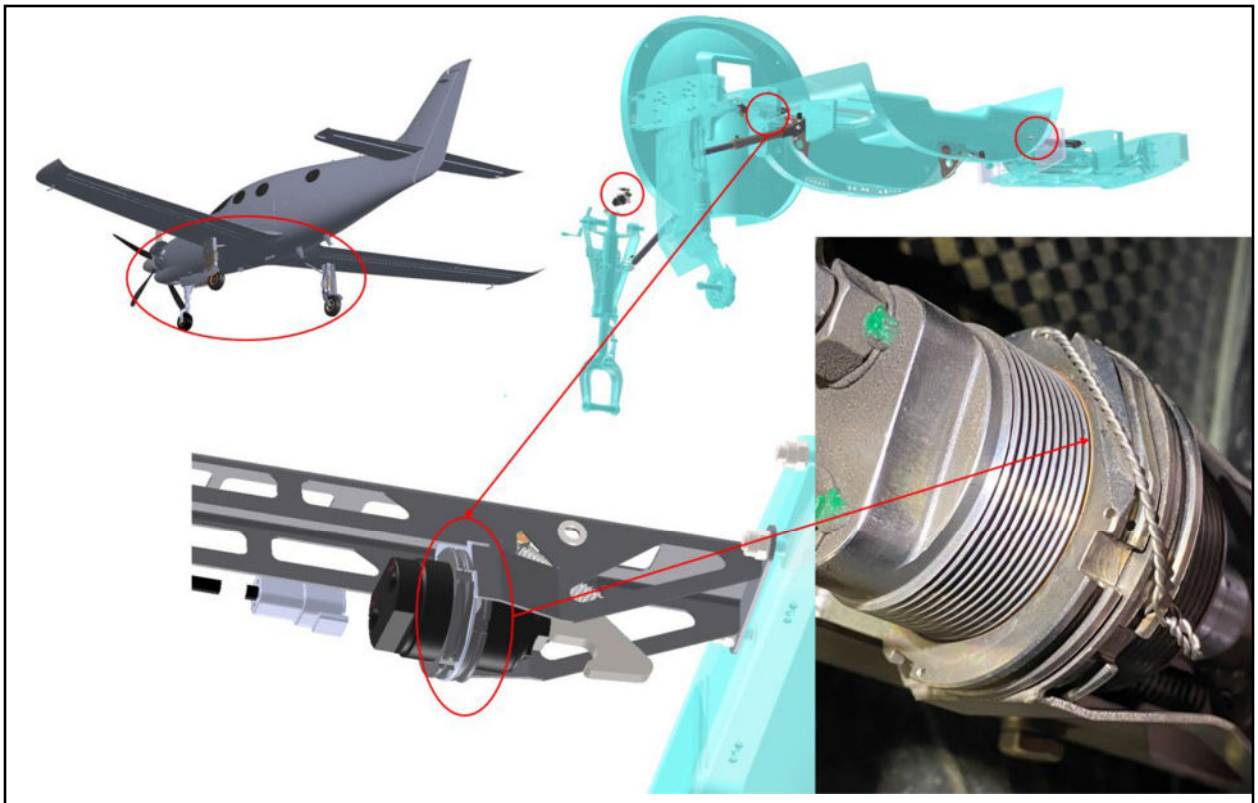

Figure 3: Uplock Nut Corrosion

Epic Aircraft, LLC ◆ 22590 Nelson Road ◆ Bend OR 97701
Phone: 541-318-8849 ◆ Fax: 541-382-5125 ◆ Web: www.epicaircraft.com

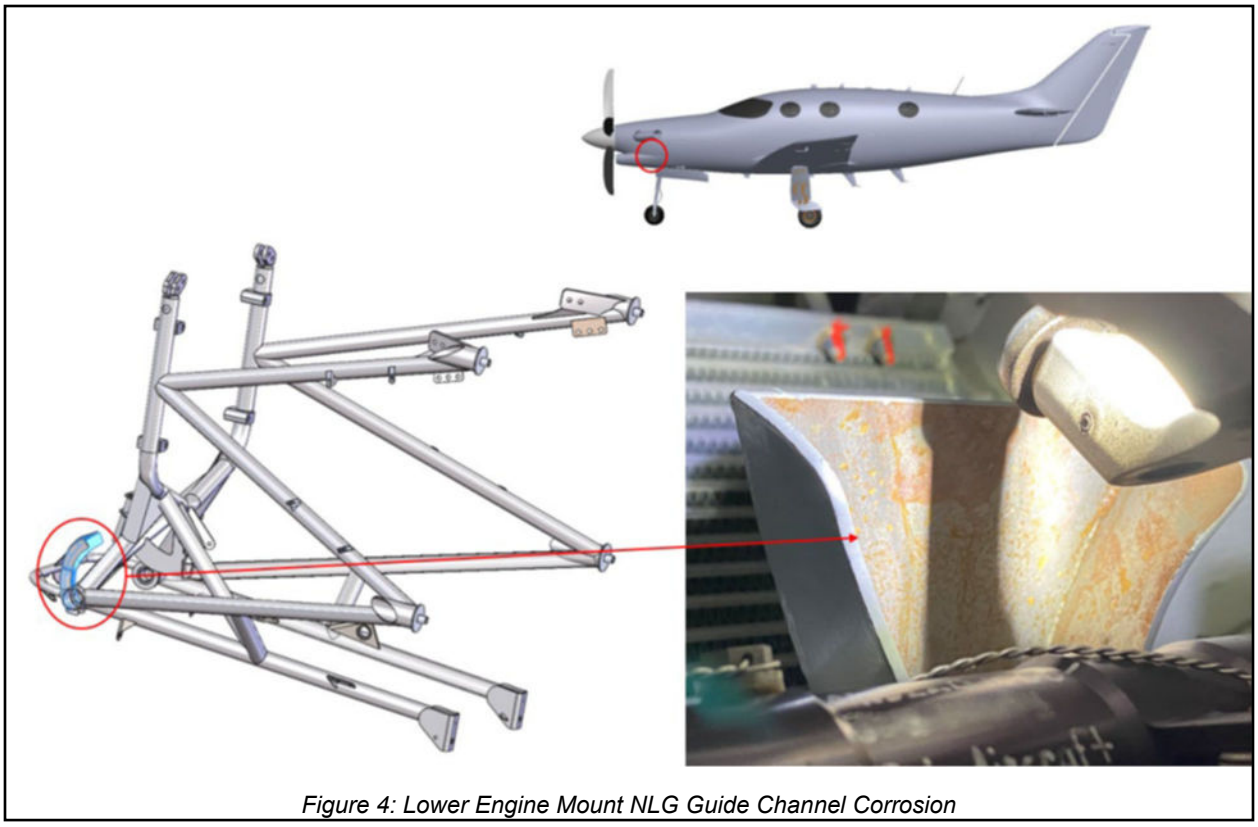

Figure 4: Lower Engine Mount NLG Guide Channel Corrosion

Epic Aircraft, LLC ◆ 22590 Nelson Road ◆ Bend OR 97701
Phone: 541-318-8849 ◆ Fax: 541-382-5125 ◆ Web: www.epicaircraft.com

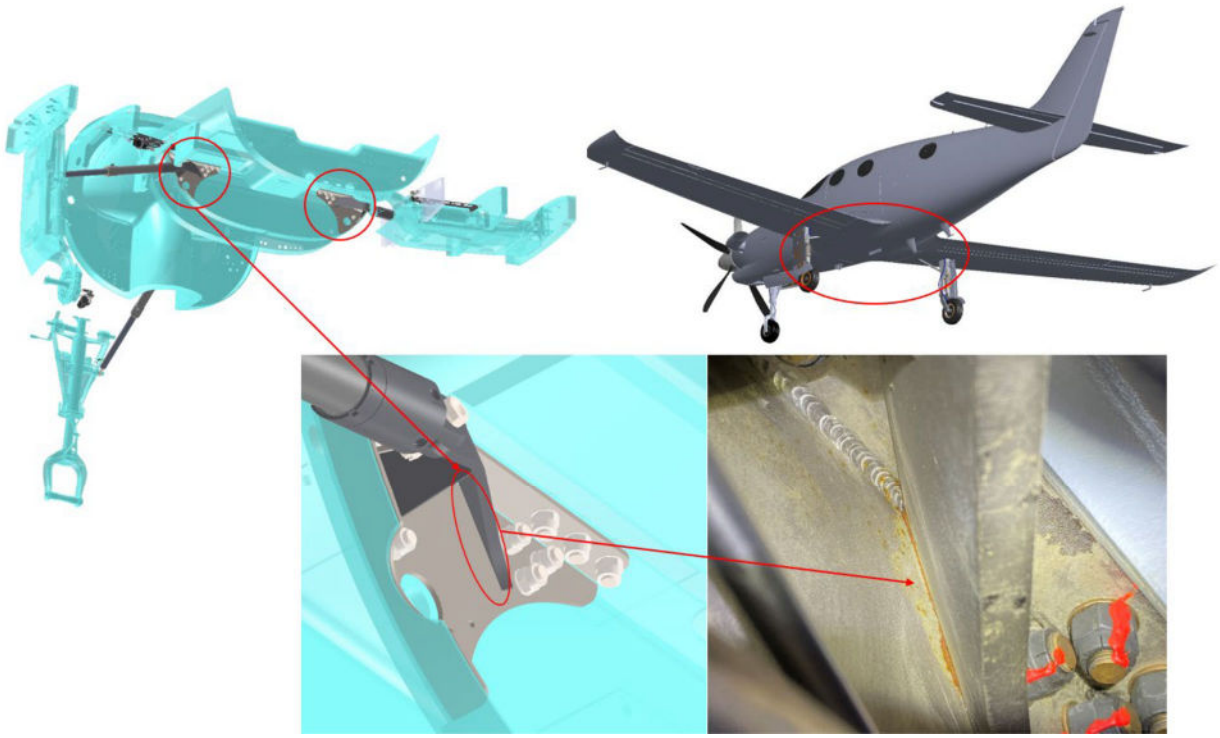

Figure 5: Main Landing Gear Actuator Mount Corrosion

Epic Aircraft, LLC ◆ 22590 Nelson Road ◆ Bend OR 97701
Phone: 541-318-8849 ◆ Fax: 541-382-5125 ◆ Web: www.epicaircraft.com

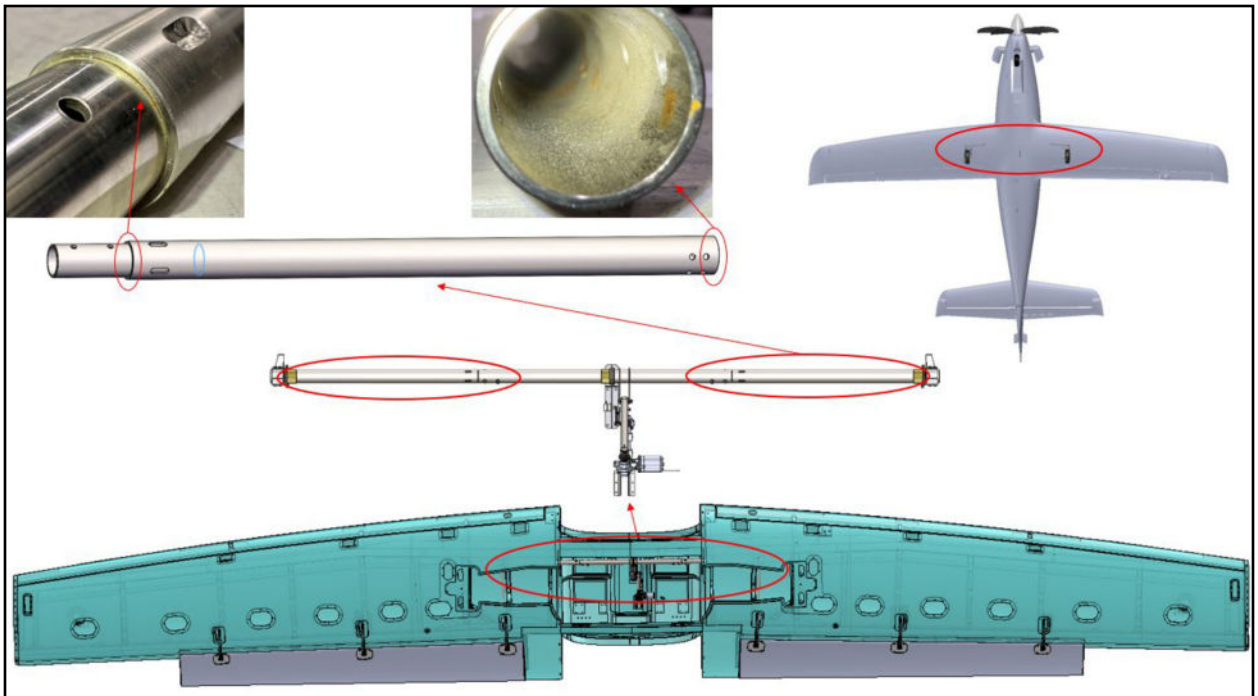

Figure 6: Flap Torque Tube Corrosion

Epic Aircraft, LLC ◆ 22590 Nelson Road ◆ Bend OR 97701
Phone: 541-318-8849 ◆ Fax: 541-382-5125 ◆ Web: www.epicaircraft.com

10 WEIGHT AND BALANCE:

Negligible

11 PUBLICATIONS AFFECTED:

N/A

12 RECORD COMPLIANCE:

Make appropriate entry in airplane maintenance records.

Epic Aircraft, LLC ◆ 22590 Nelson Road ◆ Bend OR 97701
Phone: 541-318-8849 ◆ Fax: 541-382-5125 ◆ Web: www.epicaircraft.com

Appendix A: Compliance Letter

Please complete and mail this form to Customersupport@epicaircraft.com

This is to certify that I have completed the work in accordance with the Epic Aircraft, LLC Service Bulletin.

Aircraft Owner Information:
Date: _____ Aircraft Serial Number: _____ Aircraft Reg. Number: _____ Owner's Name: _____
Maintenance Entity Information
Name of Shop Performing the work: _____ Name of Person(s) Performing inspection and/or work: _____ Phone Number: _____ Email: _____