Service Bulletin SB-0054

Epic Aircraft, LLC ◆ 22590 Nelson Road ◆ Bend OR 97701
Phone: 541-318-8849 ◆ Fax: 541-382-5125 ◆ Web: www.epicaircraft.com

Subject: NLG Uplock Improvement

ATA-Code: 32-20

Labor: 2 hours

Effectivity: K003 – K049

Affected Model(s): E1000, E1000GX

Due: Next annual inspection.

Compliance: Mandatory upon condition

Recurrence: No

1 BACKGROUND AND PURPOSE:

It has been found on affected aircraft that the nose landing gear uplock hook can overtravel, preventing the nose landing gear from staying retracted. It was also found that some of these aircraft have experienced binding of the uplock hook.

This Service Bulletin gives instructions to inspect and install improvements if required to the uplock hook assembly.

2 REFERENCES:

Epic E1000 Airframe Maintenance Manual, P/N SK05000000

3 WARRANTY:

For aircraft under warranty, parts and labor will be covered by Epic Aircraft, LLC if the work is performed within the compliance period and at an Authorized E1000 Service Center.

4 APPROVAL:

The engineering aspects of this service document have been shown to comply with the applicable Federal Aviation Regulations and are FAA approved.

5 REVISION:

A: If the original issue of this service bulletin was complied with, compliance with revision A is not required.

- Added upon condition to compliance.
- Added step 1 and 2.

6 TOOLS:

No.	Description	Qty	Epic Aircraft Supplied	Customer Supplied
1.	Common hand tools.	A/R	☐	☒
2.	Hydraulic Aircraft Jacks, 10,000lb capacity.	3	☐	☒
3.	Lifting Pins, PN FK07100001	3	☐	☒

7 PARTS/MATERIALS:

No.	Part Number	Description	Qty	Epic Aircraft Supplied	Customer Supplied
1.	AK32308001	Weldment, Hook, NLG	1	☒	☐
2.	PK71202084	Bumper Bracket, Up Stop, NLG Hook	1	☒	☐
3.	PK99006033	Spring, Extension, .313 O.D. X 2.000 LG, 24 LB-IN Rate.	2	☒	☐
4.	PK71202083	NLG Rubber Bumper, Up Stop	1	☒	☐
5.	PK32308004	Bushing, NLG Up-lock Assy.	1	☒	☐
6.	PK32301011	Nut, Uplock Actuator	A/R	☒	☐
7.	AN4-6A	Bolt, 1/4-28 x 25/32” Undrilled	1	☐	☒
8.	NAS1149F0432P	Washer, Flat 1/4 x .032	2	☐	☒
9.	NAS1149F0632P	Washer, Flat 3/8 x .032	1	☐	☒
10.	MS21042L4	Nut, Self-locking, 450°, Reduced, 1/4-28	1	☐	☒
11.	MS20995C32	Safety Wire, .032 DIA.	A/R	☐	☒
12.	AN5-30	Bolt, 5/16-24 x 3-3/32" Drilled Shank	1	☐	☒
13.	MS24665-134	Pin, Cotter, Cad Steel Ø .062 x .75	1	☐	☒

Epic Aircraft, LLC ◆ 22590 Nelson Road ◆ Bend OR 97701
Phone: 541-318-8849 ◆ Fax: 541-382-5125 ◆ Web: www.epicaircraft.com

8 INSTRUCTIONS:

1. Observe if uplock hook is in an over-center condition with return springs preventing the hook from returning to its normal rest position against the unlocking actuator.
2. Evaluate hook motion by disconnecting return springs and manually moving the hook through its range of motion, it should move freely.
3. Raise the airplane using aircraft jacks. Ensure there is sufficient clearance from the ground to retract and extend the landing gear (refer to the Epic E1000 Airframe Maintenance Manual, PN SK05000000, Chapter 7-10).
4. Set the BATT 1 and BATT 2 switches to OFF.
5. For personnel safety pull and collar Landing Gear Control circuit breaker while personnel are performing maintenance in the landing gear arc zone.
6. Disconnect external electrical power from the airplane (refer to Epic E1000 Aircraft Maintenance Manual, PN SK05000000, chapter 24-40).
7. Remove engine cowls as needed (refer to Epic E1000 Aircraft Maintenance Manual, PN SK05000000, Chapter 71-10).
8. Disassemble NLG uplock hook assembly, discard AN5-27 bolt (refer to Epic E1000 Aircraft Maintenance Manual, PN SK05000000, Chapter 32-30).

Note: Hydraulic lines do not need to be removed to perform this work.

9. Assemble bumper bracket assembly per Figure 3: Bumper Bracket Assembly. Torque MS21042L4 nut to 5-10 in-lbs.
10. Inspect uplock actuator nuts for corrosion.
    a. If corrosion is present, replace with updated uplock nuts and discard existing nuts.
11. Install new NLG uplock hook and bushing with AN5-30 bolt as well as uplock stop and springs, see Figure 2. for install (refer to Epic E1000 Aircraft Maintenance Manual, PN SK05000000, Chapter 32-20).

Note: Uplock actuator nut torque is now 20 lb ft.

12. Remove collar and reset Landing Gear Control circuit breaker once maintenance personnel have cleared the landing gear arc zone.
13. Perform Nose Landing Gear Uplock Actuator Adjustment (refer to Epic E1000 Aircraft Maintenance Manual, PN SK05000000, Chapter 32-30).

14. Perform the Landing Gear Operation Test and Uplock Hook Check (refer to Epic E1000 Aircraft Maintenance Manual, PN SK05000000, Chapter 32-30).

15. Reinstall Engine Cowls (refer to Epic E1000 Aircraft Maintenance Manual, PN SK05000000, Chapter 71-10).

16. Lower the airplane and remove the aircraft jacks (refer to the E1000 Aircraft Maintenance Manual PN SK05000000, chapter 7-10).

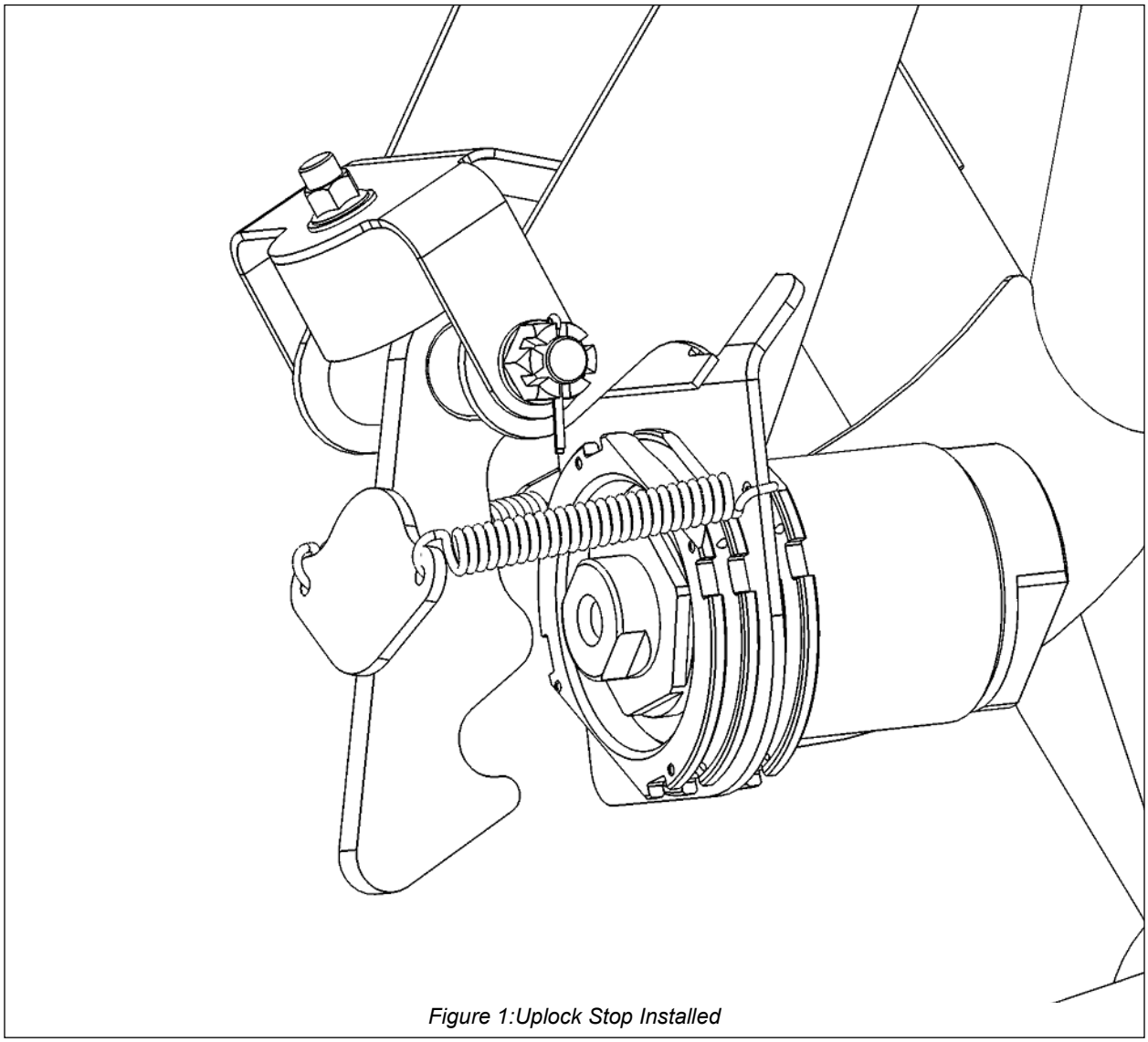

Figure 1:Uplock Stop Installed

Epic Aircraft, LLC ◆ 22590 Nelson Road ◆ Bend OR 97701
Phone: 541-318-8849 ◆ Fax: 541-382-5125 ◆ Web: www.epicaircraft.com

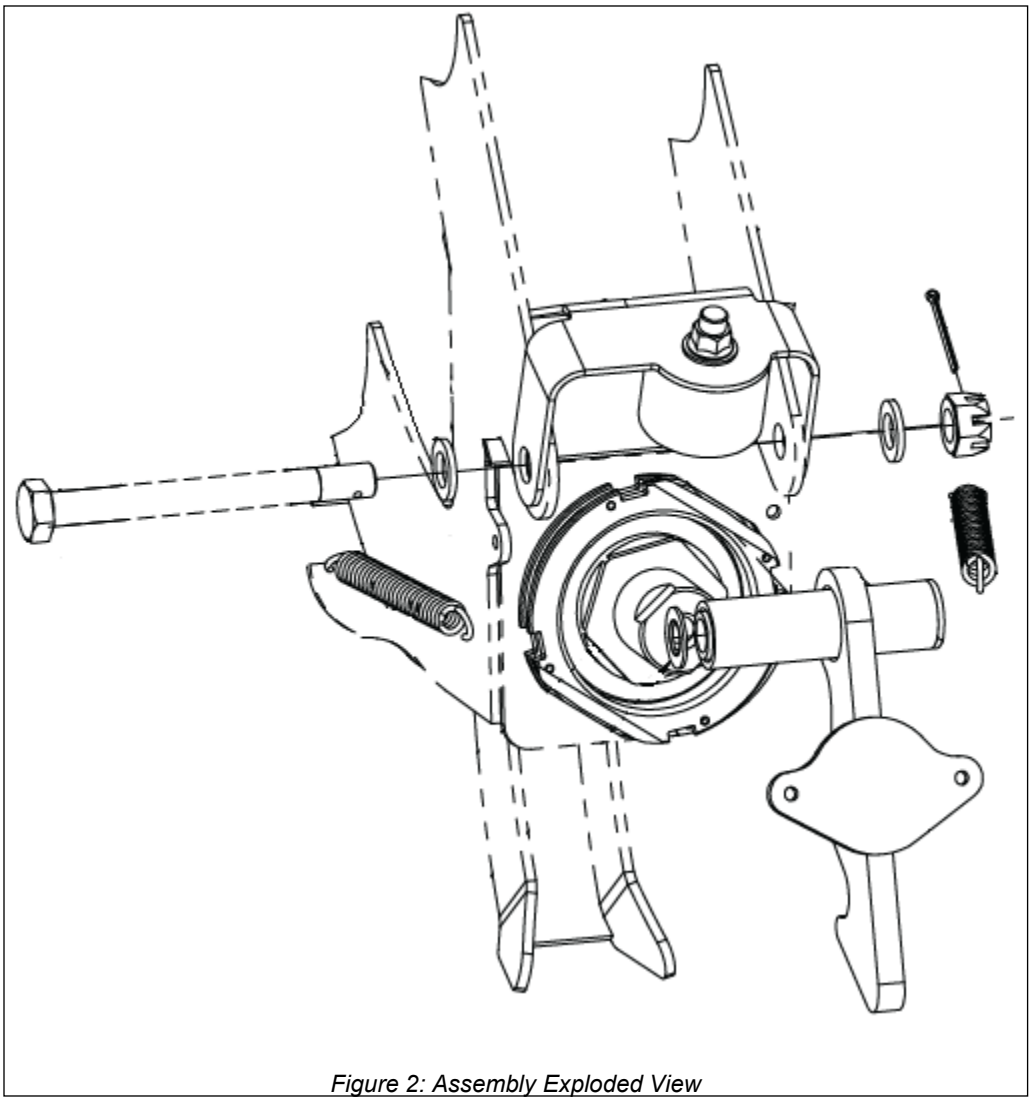

Figure 2: Assembly Exploded View

Epic Aircraft, LLC ◆ 22590 Nelson Road ◆ Bend OR 97701
Phone: 541-318-8849 ◆ Fax: 541-382-5125 ◆ Web: www.epicaircraft.com

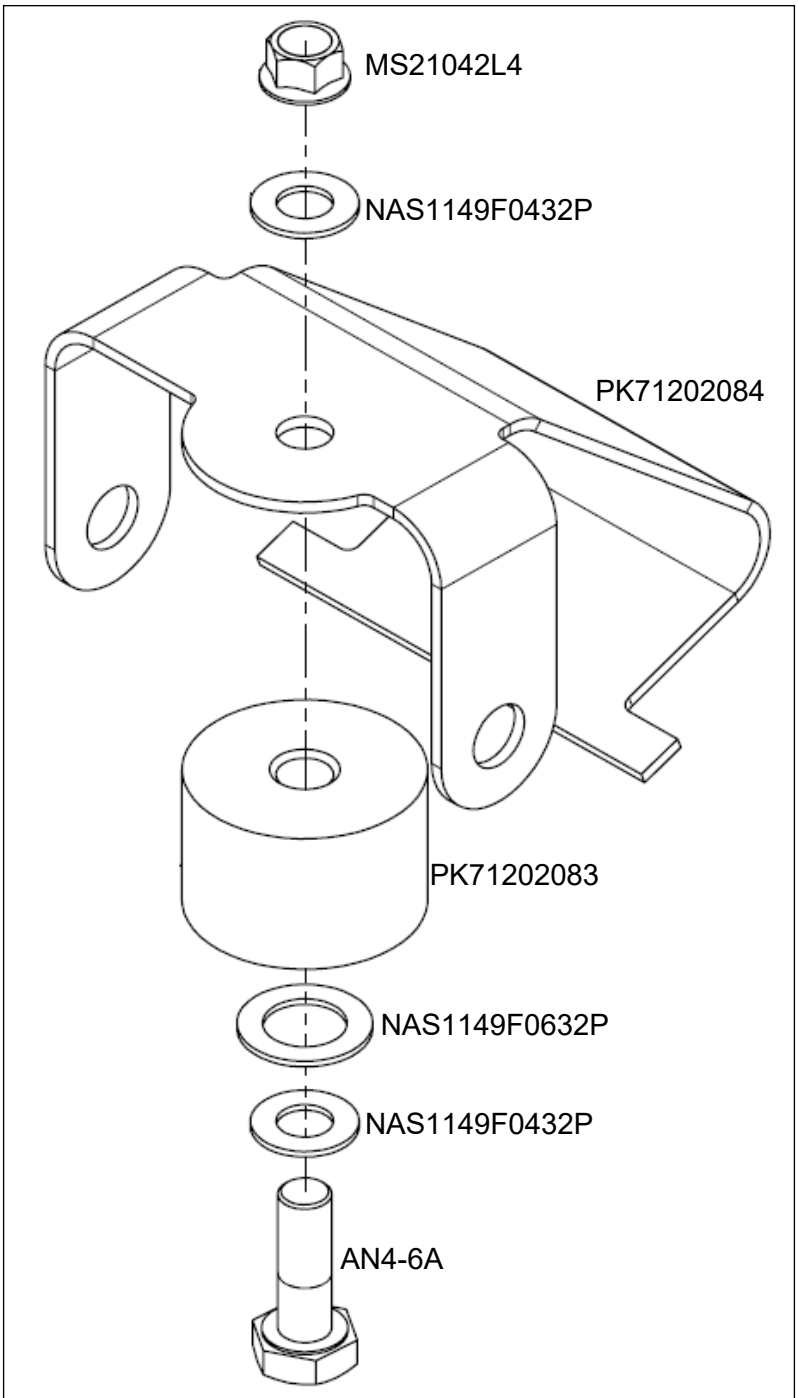

Figure 3: Bumper Bracket Assembly

Epic Aircraft, LLC ◆ 22590 Nelson Road ◆ Bend OR 97701
Phone: 541-318-8849 ◆ Fax: 541-382-5125 ◆ Web: www.epicaircraft.com

9 WEIGHT AND BALANCE:

Negligible

10 PUBLICATIONS AFFECTED:

Epic E1000 Illustrated parts Catalog P/N SK05000004
Epic E1000 Aircraft Maintenance Manual P/N SK05000000

11 RECORD COMPLIANCE:

Make appropriate entry in airplane maintenance records.

Epic Aircraft, LLC ◆ 22590 Nelson Road ◆ Bend OR 97701
Phone: 541-318-8849 ◆ Fax: 541-382-5125 ◆ Web: www.epicaircraft.com

Appendix A: Compliance Letter

Please complete and mail this form to Customersupport@epicaircraft.com

This is to certify that I have completed the work in accordance with the Epic Aircraft, LLC Service Bulletin.

Aircraft Owner Information:
Date: _____ Aircraft Serial Number: _____ Aircraft Reg. Number: _____ Owner's Name: _____
Maintenance Entity Information
Name of Shop Performing the work: _____ Name of Person(s) Performing inspection and/or work: _____ Phone Number: _____ Email: _____