Service Bulletin SB-0059

Epic Aircraft, LLC ◆ 22590 Nelson Road ◆ Bend OR 97701
Phone: 541-318-8849 ◆ Fax: 541-382-5125 ◆ Web: www.epicaircraft.com

Subject: Inertial Separator Shedder Vane Inspection

ATA-Code: 71-69

Labor: 3 hours

Effectivity: K004-K064

Affected Model(s): E1000, E1000 GX

Due: Next annual inspection

Compliance: Mandatory

Recurrence: Yes, until shedder vanes are replaced with AK71600077 and AK71692000.

1 BACKGROUND AND PURPOSE:

Inertial separator shedder vanes may crack at the upper attachment on both the right (AK71691000) and left (AK71692500) hand side. This service bulletin provides instruction on how to check for and replace the cracked shedder vanes.

2 REFERENCES:

Epic E1000 Aircraft Maintenance Manual P/N SK0500000

3 WARRANTY:

For aircraft under warranty, parts and labor will be covered by Epic Aircraft, LLC if the work is performed within the compliance period and by a properly certificated Airframe and Power Plant mechanic or FAA approved repair station.

4 APPROVAL:

The engineering aspects of this service document have been shown to comply with the applicable Federal Aviation Regulations and are FAA approved.

Epic Aircraft, LLC ◆ 22590 Nelson Road ◆ Bend OR 97701
Phone: 541-318-8849 ◆ Fax: 541-382-5125 ◆ Web: www.epicaircraft.com

5 TOOLS:

No.	Description	Qty	Epic Aircraft Supplied	Customer Supplied
1.	Basic Hand Tools	N/A	☐	☒
2.	0.228 Dagger Drill Bit (PN: 228DGGRDR4 or equivalent)	1	☐	☒

6 PARTS/MATERIALS:

No.	Part Number	Description	Qty	Epic Aircraft Supplied	Customer Supplied
1.	AK71600077	Left-Side Shedder Vane	A/R	☒	☐
2.	AK71692000	Right-Side Shedder Vane	A/R	☒	☐
3.	AN3-3A	Bolt, 10-32 x 15/32" Undrilled	2	☐	☒
4.	AN970-3	Washer, Flat #10 x .063	2	☐	☒
5.	PR-1995	PPG Aerospace: Fire Sealant Paste	A/R	☐	☒

7 INSTRUCTIONS:

1. Ensure inertial separators are in the normal operation position before starting this Service Bulletin.
2. Set the BATT 1 and BATT 2 switches to OFF.
3. Remove all external electrical power from the airplane (refer to Epic E1000 Aircraft Maintenance Manual, PN SK05000000, chapter 24-40).
4. Remove the engine cowls (refer to Epic E1000 Aircraft Maintenance Manual, PN SK05000000, chapter 71-10).
5. With a flashlight and inspection mirror, inspect shedder vanes for cracks and loose or worn rivets (see Figure 6 for examples and location).
6. If cracks or damaged rivets are found, replace with updated parts as follows:
    a. Remove the shedder vane from both inertial separators (see Figure 6):
        i. Replacement shedder vane requires additional hardware attachment, some aircraft have this hole already, and is blanked with hardware from the factory, if this hardware exists in the position indicated by Fig 1-2, do as follows:
            1. Remove the bolt and nut plugging the hole and discard.
            2. Unbolt hardware and remove shedder vane from the front of the intake.
            3. Clean off the sealant from the plenum.
            4. Install new shedder vane. Apply PR-1995 to AN-970 washer, and install shedder vane using AN3 hardware.
            5. Skip to step ix.
        ii. If the new hole is not already drilled, remove the upper corner intake plenum piece (see Figure 5).
        iii. Cover the intake screen to block FOD from entering the engine intake.
        iv. Locate and remove the upper bolt and lower mounting hardware (Figure 6, number 3). Some aircraft will have an extra hole drilled and blanked with hardware from factory.
        v. Slide the shedder vane (Figure 6, number 1) out of the top of the open intake plenum.

CAUTION: PLACE A VACUUM ON THE BACK SIDE OF THE DRILL LOCATION IN ORDER TO PREVENT FOD FROM ENTERING THE INTAKE OF THE POWER PLANT.

        vi. Temporarily install new shedder vane, new vanes shown in Figure 3 and Figure 4.

Epic Aircraft, LLC ◆ 22590 Nelson Road ◆ Bend OR 97701
Phone: 541-318-8849 ◆ Fax: 541-382-5125 ◆ Web: www.epicaircraft.com

vii. Mark new hole location and match drill using the 0.228 dagger bit. New holes should match locations shown in Figure 1 and Figure 2.

viii. Permanently install new shedder vanes.

ix. Apply PR-1995 to upper shedder vane hardware in order to seal the washers against the intake.

x. Apply PR-1995 between inertial separator cap and interior of inertial separator as well as the cap and the external surface of the inertial separator (Figure 6, number 2).

xi. Clean plenum intake area thoroughly before removing intake covering.

xii. Remove intake cover.

7. Reinstall intake plenum parts (refer to Epic E1000 Aircraft Maintenance Manual, PN SK05000000, chapter 71-60).

8. Reinstall the engine cowls (refer to Epic E1000 Aircraft Maintenance Manual, PN SK05000000, chapter 71-10).

Epic Aircraft, LLC ◆ 22590 Nelson Road ◆ Bend OR 97701
Phone: 541-318-8849 ◆ Fax: 541-382-5125 ◆ Web: www.epicaircraft.com

8 TABLES AND FIGURES

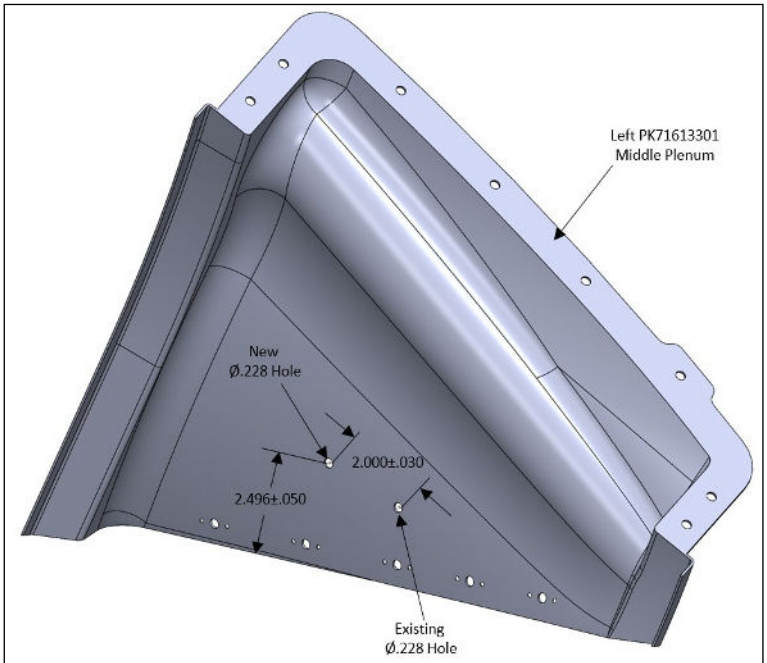

Figure 1: Left Side New Hole Location

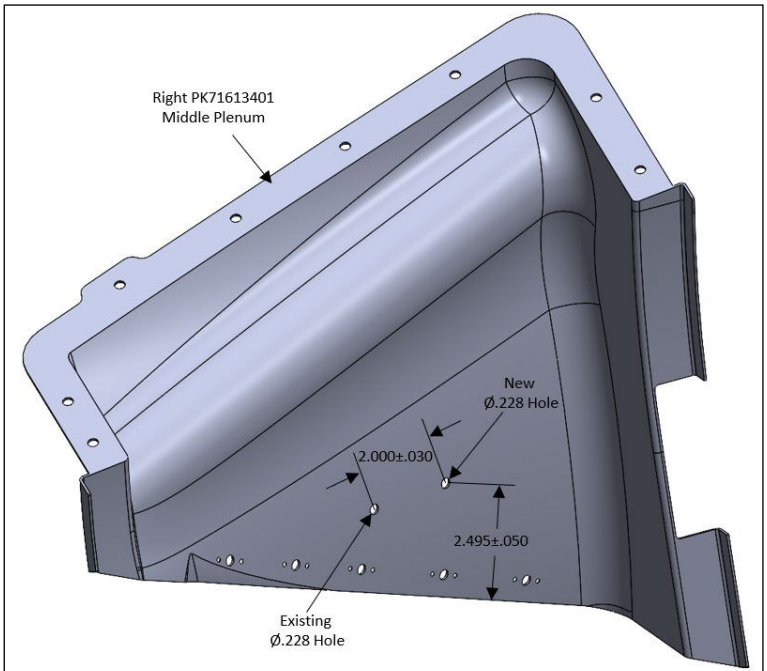

Figure 2: Right Side New Hole Location

Epic Aircraft, LLC ◆ 22590 Nelson Road ◆ Bend OR 97701
Phone: 541-318-8849 ◆ Fax: 541-382-5125 ◆ Web: www.epicaircraft.com

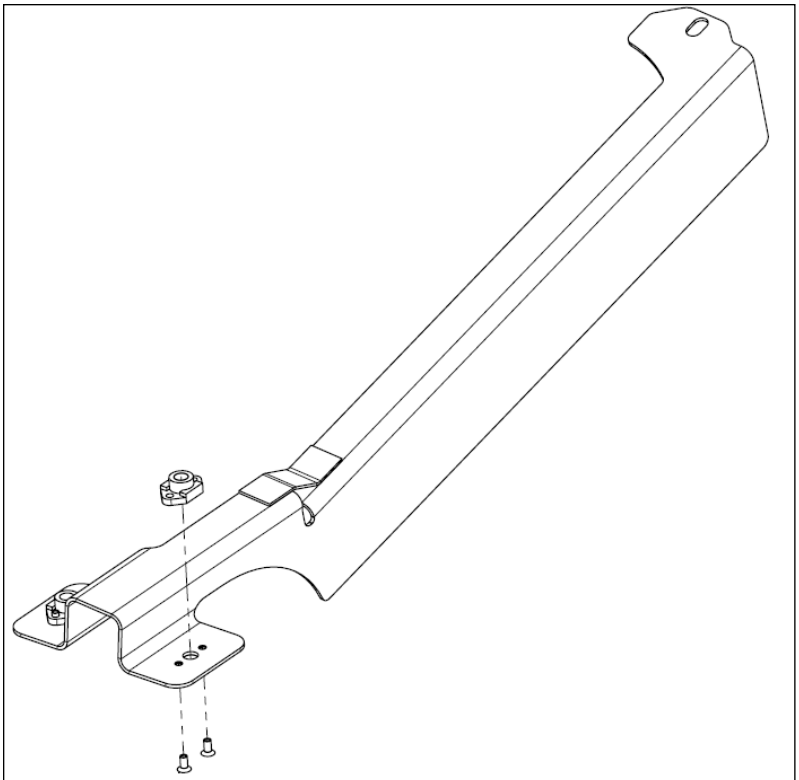

Figure 3: New RH Shedder Vane Assy

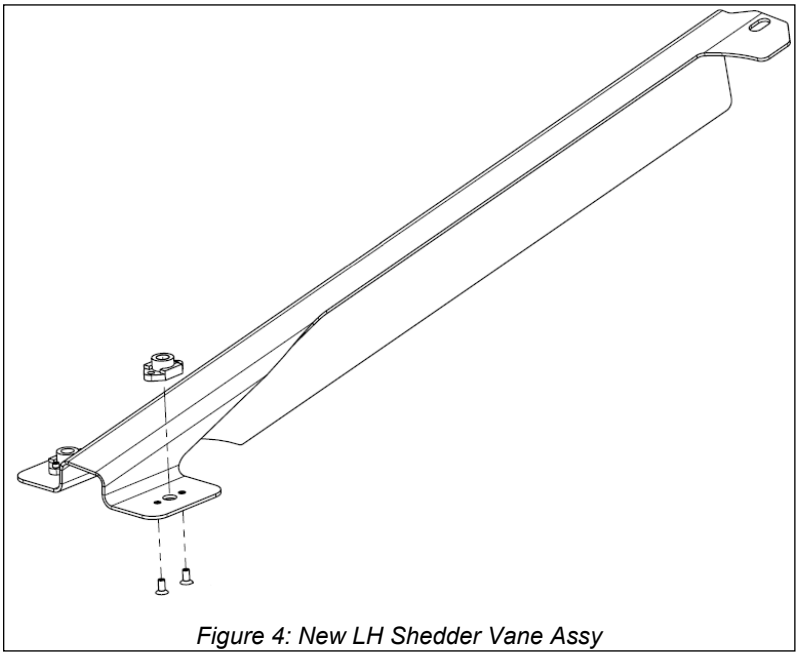

Figure 4: New LH Shedder Vane Assy

Epic Aircraft, LLC ◆ 22590 Nelson Road ◆ Bend OR 97701
Phone: 541-318-8849 ◆ Fax: 541-382-5125 ◆ Web: www.epicaircraft.com

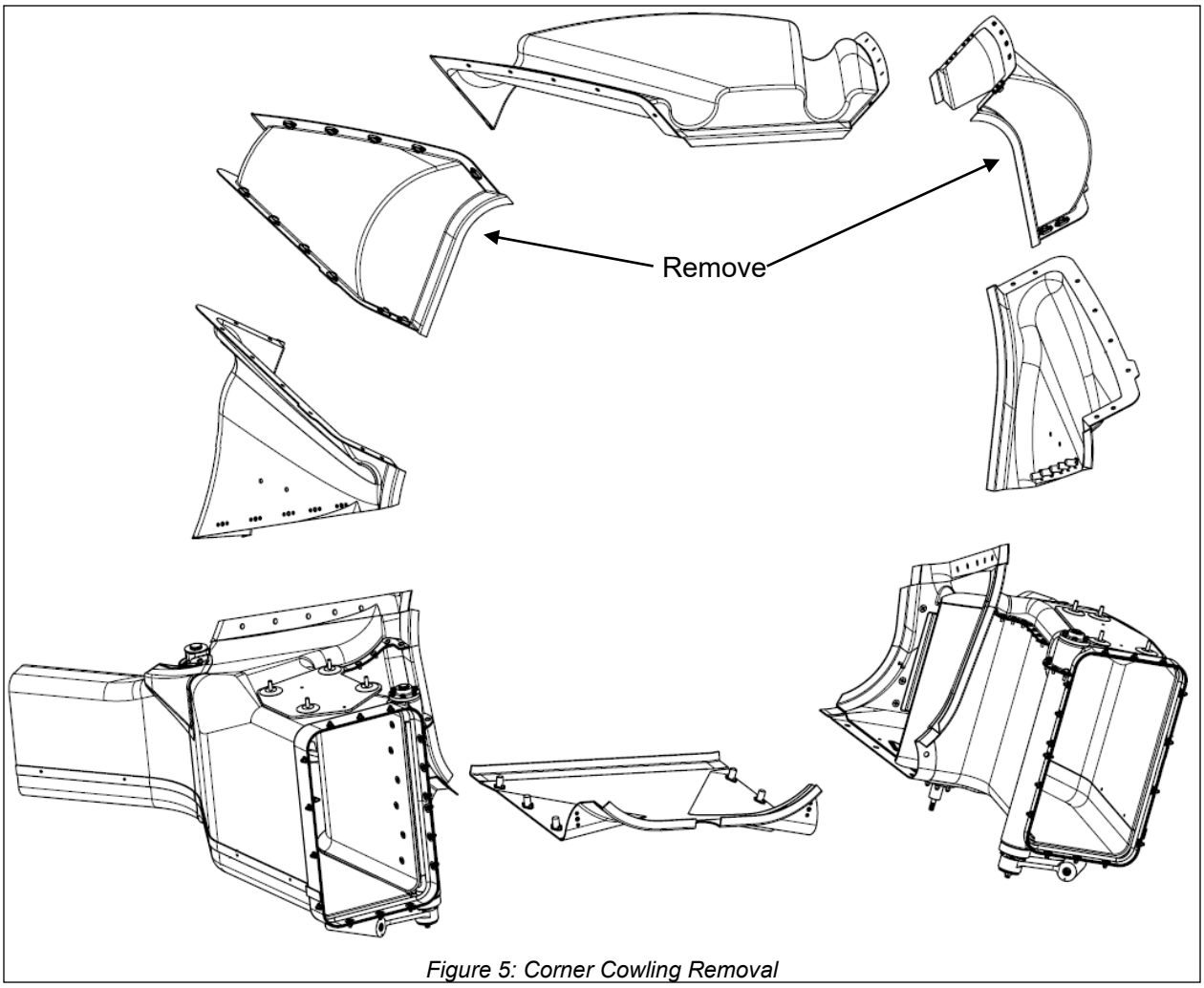

Figure 5: Corner Cowling Removal

Epic Aircraft, LLC ◆ 22590 Nelson Road ◆ Bend OR 97701
Phone: 541-318-8849 ◆ Fax: 541-382-5125 ◆ Web: www.epicaircraft.com

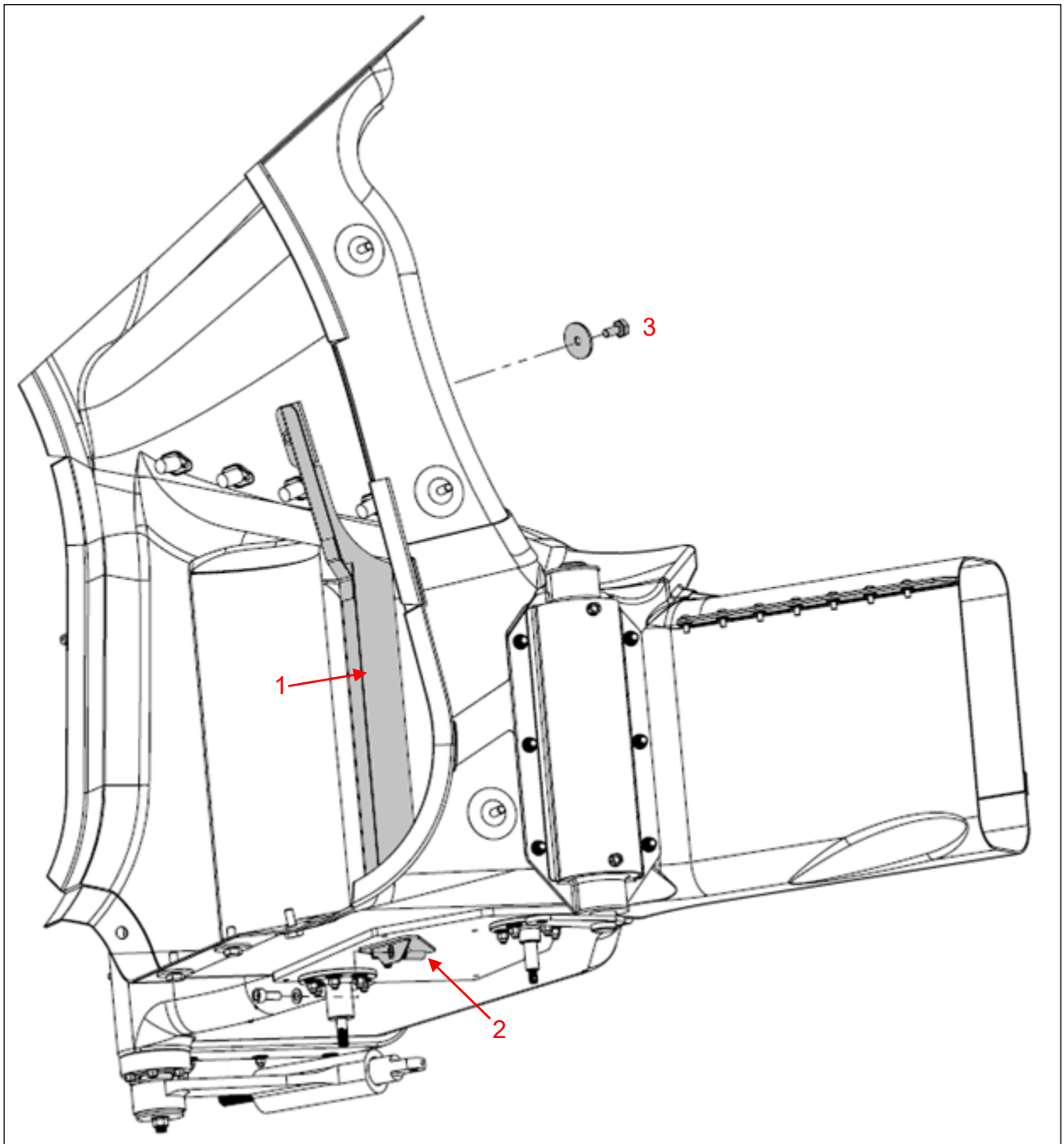

Figure 6: Parts to be Removed, (Opposite Side Reflected)

Epic Aircraft, LLC ◆ 22590 Nelson Road ◆ Bend OR 97701
Phone: 541-318-8849 ◆ Fax: 541-382-5125 ◆ Web: www.epicaircraft.com



Figure 7: Cracking Examples

Epic Aircraft, LLC ◆ 22590 Nelson Road ◆ Bend OR 97701
Phone: 541-318-8849 ◆ Fax: 541-382-5125 ◆ Web: www.epicaircraft.com

9 WEIGHT AND BALANCE:

Negligible

10 PUBLICATIONS AFFECTED:

Epic E1000 Aircraft Maintenance Manual P/N SK0500000
Epic E1000 Illustrated parts Catalog P/N SK05000004

11 RECORD COMPLIANCE:

Make appropriate entry in airplane maintenance records.

Epic Aircraft, LLC ◆ 22590 Nelson Road ◆ Bend OR 97701
Phone: 541-318-8849 ◆ Fax: 541-382-5125 ◆ Web: www.epicaircraft.com

Appendix A: Compliance Letter

Please complete and mail this form to Customersupport@epicaircraft.com

This is to certify that I have completed the work in accordance with the Epic Aircraft, LLC Service Bulletin.

Aircraft Owner Information:
Date: _____ Aircraft Serial Number: _____ Aircraft Reg. Number: _____ Owner's Name: _____
Maintenance Entity Information
Name of Shop Performing the work: _____ Name of Person(s) Performing inspection and/or work: _____ Phone Number: _____ Email: _____