PILOT'S OPERATING HANDBOOK
AND
FAA APPROVED
AIRPLANE FLIGHT MANUAL



E1000 *GX*

(SN: K011 and On, or K003 – K010 with SB-0017)

Serial Number _____

Registration Number _____

Type Certificate No. A00059SE

This airplane is approved in the Utility Category based on 14 CFR part 23. This document must be carried in the airplane at all times and be kept within reach of the pilot during all flight operations.

THIS HANDBOOK INCLUDES THE MATERIAL REQUIRED TO BE FURNISHED TO THE PILOT BY THE FEDERAL AVIATION REGULATIONS AND ADDITIONAL INFORMATION PROVIDED BY THE MANUFACTURER AND CONSTITUTES THE FAA APPROVED AIRPLANE FLIGHT MANUAL.

This AFM has been prepared using GAMA Specification #1 for Pilot's Operating Handbook, Revision 2, dated 18 October 1996.

This Aircraft Flight Manual is approved by the FAA on behalf of the "Agência Nacional de Aviação Civil" – ANAC for Brazilian Registered aircraft, in accordance with the "Regulamento Brasileiro da Aviação Civil" – RBAC21, Section 21.29

Epic Aircraft, LLC
22590 Nelson Road
Bend Municipal Airport
Bend, Oregon 97701
Phone: (541) 318-8849
Fax: (541) 382-5125

JOHN A HED Digitally signed by JOHN A HED Date: 2023.11.29 09:57:38 -08'00' FTE, AIR-713, for:

Manager, Flight Test & Human Factors Branch, AIR-710
Federal Aviation Administration

29 Nov 2023
Approved Date

COPYRIGHT 2023
EPIC AIRCRAFT LLC
BEND, OREGON, USA
P/N SK05001101 BRAZIL

This Page Intentionally Left Blank

LIST OF EFFECTIVE PAGES

Use this list to determine the current effective date for each page in the AFM. Supplements are issued individually and are controlled by the Log of Supplements page in Section 9.

Date of issue for original and changed pages:
Original Issue ..... 29 Nov 2023, John Hed, AIR-713

Page	Revision	Page	Revision	Page	Revision
1-1	Original Issue	2-7	Original Issue	3-9	Original Issue
1-2	Original Issue	2-8	Original Issue	3-10	Original Issue
1-3	Original Issue	2-9	Original Issue	3-11	Original Issue
1-4	Original Issue	2-10	Original Issue	3-12	Original Issue
1-5	Original Issue	2-11	Original Issue	3-13	Original Issue
1-6	Original Issue	2-12	Original Issue	3-14	Original Issue
1-7	Original Issue	2-13	Original Issue	3-15	Original Issue
1-8	Original Issue	2-14	Original Issue	3-16	Original Issue
1-9	Original Issue	2-15	Original Issue	3-17	Original Issue
1-10	Original Issue	2-16	Original Issue	3-18	Original Issue
1-11	Original Issue	2-17	Original Issue	3-19	Original Issue
1-12	Original Issue	2-18	Original Issue	3-20	Original Issue
1-13	Original Issue	2-19	Original Issue	3-21	Original Issue
1-14	Original Issue	2-20	Original Issue	3-22	Original Issue
1-15	Original Issue	2-21	Original Issue	3-23	Original Issue
1-16	Original Issue	2-22	Original Issue	3-24	Original Issue
1-17	Original Issue	2-23	Original Issue	3-25	Original Issue
1-18	Original Issue	2-24	Original Issue	3-26	Original Issue
1-19	Original Issue	2-25	Original Issue	3-27	Original Issue
1-20	Original Issue	2-26	Original Issue	3-28	Original Issue
1-21	Original Issue	2-27	Original Issue	3-29	Original Issue
1-22	Original Issue	2-28	Original Issue	3-30	Original Issue
1-23	Original Issue	2-29	Original Issue	3-31	Original Issue
1-24	Original Issue	2-30	Original Issue	3-32	Original Issue
1-25	Original Issue	2-31	Original Issue	3-33	Original Issue
1-26	Original Issue	2-32	Original Issue	3-34	Original Issue
1-27	Original Issue	2-33	Original Issue	3-35	Original Issue
1-28	Original Issue	2-34	Original Issue	3-36	Original Issue
1-29	Original Issue	3-1	Original Issue	3-37	Original Issue
1-30	Original Issue	3-2	Original Issue	3-38	Original Issue
2-1	Original Issue	3-3	Original Issue	3-39	Original Issue
2-2	Original Issue	3-4	Original Issue	3-40	Original Issue
2-3	Original Issue	3-5	Original Issue	3A-1	Original Issue
2-4	Original Issue	3-6	Original Issue	3A-2	Original Issue
2-5	Original Issue	3-7	Original Issue	3A-3	Original Issue
2-6	Original Issue	3-8	Original Issue	3A-4	Original Issue

LIST OF EFFECTIVE PAGES (CONT.)

Page	Revision	Page	Revision	Page	Revision
3A-5	Original Issue	4-30	Original Issue	7-3	Original Issue
3A-6	Original Issue	5-1	Original Issue	7-4	Original Issue
3A-7	Original Issue	5-2	Original Issue	7-5	Original Issue
3A-8	Original Issue	5-3	Original Issue	7-6	Original Issue
3A-9	Original Issue	5-4	Original Issue	7-7	Original Issue
3A-10	Original Issue	5-5	Original Issue	7-8	Original Issue
3A-11	Original Issue	5-6	Original Issue	7-9	Original Issue
3A-12	Original Issue	5-7	Original Issue	7-10	Original Issue
3A-13	Original Issue	5-8	Original Issue	7-11	Original Issue
3A-14	Original Issue	5-9	Original Issue	7-12	Original Issue
3A-15	Original Issue	5-10	Original Issue	7-13	Original Issue
3A-16	Original Issue	5-11	Original Issue	7-14	Original Issue
3A-17	Original Issue	5-12	Original Issue	7-15	Original Issue
3A-18	Original Issue	5-13	Original Issue	7-16	Original Issue
3A-19	Original Issue	5-14	Original Issue	7-17	Original Issue
3A-20	Original Issue	5-15	Original Issue	7-18	Original Issue
3A-21	Original Issue	5-16	Original Issue	7-19	Original Issue
3A-22	Original Issue	5-17	Original Issue	7-20	Original Issue
3A-23	Original Issue	5-18	Original Issue	7-21	Original Issue
3A-24	Original Issue	5-19	Original Issue	7-22	Original Issue
3A-25	Original Issue	5-20	Original Issue	7-23	Original Issue
3A-26	Original Issue	5-21	Original Issue	7-24	Original Issue
3A-27	Original Issue	5-22	Original Issue	7-25	Original Issue
3A-28	Original Issue	5-23	Original Issue	7-26	Original Issue
3A-29	Original Issue	5-24	Original Issue	7-27	Original Issue
3A-30	Original Issue	5-25	Original Issue	7-28	Original Issue
4-1	Original Issue	5-26	Original Issue	7-29	Original Issue
4-2	Original Issue	5-27	Original Issue	7-30	Original Issue
4-3	Original Issue	5-28	Original Issue	7-31	Original Issue
4-4	Original Issue	5-29	Original Issue	7-32	Original Issue
4-5	Original Issue	5-30	Original Issue	7-33	Original Issue
4-6	Original Issue	5-31	Original Issue	7-34	Original Issue
4-7	Original Issue	5-32	Original Issue	7-35	Original Issue
4-8	Original Issue	5-33	Original Issue	7-36	Original Issue
4-9	Original Issue	5-34	Original Issue	7-37	Original Issue
4-10	Original Issue	5-35	Original Issue	7-38	Original Issue
4-11	Original Issue	5-36	Original Issue	7-39	Original Issue
4-12	Original Issue	5-37	Original Issue	7-40	Original Issue
4-13	Original Issue	5-38	Original Issue	7-41	Original Issue
4-14	Original Issue	5-39	Original Issue	7-42	Original Issue
4-15	Original Issue	5-40	Original Issue	7-43	Original Issue
4-16	Original Issue	5-41	Original Issue	7-44	Original Issue
4-17	Original Issue	5-42	Original Issue	7-45	Original Issue
4-18	Original Issue	5-43	Original Issue	7-46	Original Issue
4-19	Original Issue	5-44	Original Issue	7-47	Original Issue
4-20	Original Issue	6-1	Original Issue	7-48	Original Issue
4-21	Original Issue	6-2	Original Issue	7-49	Original Issue
4-22	Original Issue	6-3	Original Issue	7-50	Original Issue
4-23	Original Issue	6-4	Original Issue	7-51	Original Issue
4-24	Original Issue	6-5	Original Issue	7-52	Original Issue
4-25	Original Issue	6-6	Original Issue	7-53	Original Issue
4-26	Original Issue	6-7	Original Issue	7-54	Original Issue
4-27	Original Issue	6-8	Original Issue	7-55	Original Issue
4-28	Original Issue	7-1	Original Issue	7-56	Original Issue
4-29	Original Issue	7-2	Original Issue	7-57	Original Issue

LIST OF EFFECTIVE PAGES (CONT.)

Page	Revision	Page	Revision	Page	Revision
7-58	Original Issue				
7-59	Original Issue				
7-60	Original Issue				
7-61	Original Issue				
7-62	Original Issue				
7-63	Original Issue				
7-64	Original Issue				
7-65	Original Issue				
7-66	Original Issue				
7-67	Original Issue				
7-68	Original Issue				
7-69	Original Issue				
7-70	Original Issue				
7-71	Original Issue				
7-72	Original Issue				
7-73	Original Issue				
7-74	Original Issue				
7-75	Original Issue				
7-76	Original Issue				
7-77	Original Issue				
7-78	Original Issue				
7-79	Original Issue				
7-80	Original Issue				
7-81	Original Issue				
7-82	Original Issue				
7-83	Original Issue				
7-84	Original Issue				
7-85	Original Issue				
7-86	Original Issue				
8-1	Original Issue				
8-2	Original Issue				
8-3	Original Issue				
8-4	Original Issue				
8-5	Original Issue				
8-6	Original Issue				
8-7	Original Issue				
8-8	Original Issue				
8-9	Original Issue				
8-10	Original Issue				

This Page Intentionally Left Blank

CONTENTS

	SECTION
GENERAL	1
LIMITATIONS	2
EMERGENCY PROCEDURES	3
ABNORMAL PROCEDURES	3A
NORMAL PROCEDURES	4
PERFORMANCE	5
WEIGHT AND BALANCE	6
DESCRIPTION	7
AIRPLANE HANDLING, SERVICING, AND MAINTENANCE	8
SUPPLEMENTS	9

This Page Intentionally Left Blank

SECTION 1

GENERAL

TABLE OF CONTENTS

1.1 GENERAL 3
1.1.1 REVISIONS 3
1.1.2 SUPPLEMENTS 4
1.1.3 WARNING, CAUTION, AND NOTE 5
1.2 AIRPLANE THREE VIEW 6
1.3 INTERIOR DIMENSIONS 8
1.4 TURNING RADIUS 9
1.5 DESCRIPTIVE DATA 10
1.5.1 ENGINE 10
1.5.2 PROPELLER 10
1.5.3 FUEL 10
1.5.4 ENGINE OIL 11
1.5.5 MAXIMUM CERTIFICATED WEIGHTS 11
1.5.6 STANDARD AIRPLANE WEIGHTS 11
1.5.7 CABIN, ENTRY, AND EXIT DIMENSIONS 11
1.5.8 SPECIFIC LOADINGS 11
1.5.9 NAVIGATION APPROVALS 12
1.5.10 ADS-B 17
1.5.11 RVSM 17
1.6 ABBREVIATIONS AND TERMINOLOGY 18
1.6.1 METEOROLOGICAL TERMINOLOGY 18
1.6.2 POWER TERMINOLOGY 18
1.6.3 PERFORMANCE AND FLIGHT PLANNING TERMINOLOGY 19
1.6.4 AIRSPEED TERMINOLOGY 19
1.6.5 WEIGHT AND BALANCE TERMINOLOGY 20
1.6.6 AVIONICS TERMINOLOGY 22
1.7 CONVERSION TABLES AND GRAPHS 24
1.7.1 CONVERSION FACTORS 24
1.7.2 INCHES VERSUS MILIMETERS GRAPH 24
1.7.3 FEET VERSUS METERS CONVERSION GRAPH 25
1.7.4 POUNDS VERSUS KILOGRAMS CONVERSION GRAPH 26
1.7.5 LITERS TO IMPERIAL GALLONS CONVERSION GRAPH 27
1.7.6 LITERS TO US GALLONS CONVERSION GRAPH 28
1.7.7 US GALLONS TO IMPERIAL GALLONS CONVERSION GRAPH 29
1.7.8 HECTOPASCAL TO INCHES OF MERCURY CONVERSION TABLE 29
1.7.9 CELSIUS TO FAHRENHEIT CONVERSION 30

This Page Intentionally Left Blank

1.1 GENERAL

This Handbook contains 9 Sections and includes the material required by 14 CFR part 23 to be furnished to the pilot for operation of the Epic E1000 airplane. It also contains supplemental data supplied by the manufacturer.

Portions of this Airplane Flight Manual (AFM) are approved by the Federal Aviation Administration (FAA), the remaining portions of the AFM do not require FAA approval and are not FAA approved. In order to make this clearly distinguishable as required by 14 CFR 23.1581, pages that are FAA approved are marked as "FAA APPROVED" in the footer, all pages that do not have this footer note are not FAA approved.

This section gives basic data and information relevant to operation of this airplane. It also has commonly used abbreviations, terminology, and terminology definitions.

1.1.1 REVISIONS

Revisions to this handbook are either Normal or Temporary.

1.1.1.1 NORMAL

Normal revisions are printed on white paper.

Normal revisions may include changes to several sections of the Handbook as well as provide general updates.

When normal revisions are provided, they will include an “Instruction Sheet”, a “List of Effective Pages”, and a “Narrative Description of Revisions”. The “Instruction Sheet” gives assistance on removing superseded pages and on inserting new or superseding pages of the Handbook. The “List of Effective Pages” shows the issue or revision status of all pages in the Handbook and should replace the previous List of Effective Pages in its entirety. The “Description of Revisions” give a narrative description of all changes that have been made to each page in the current revision.

1.1.1.2 TEMPORARY

Temporary revisions are printed on yellow paper.

Temporary revisions normally cover only one topic or procedure, and are issued to give safety related or other time sensitive information that must be provided in a timely manner.

When temporary revisions are provided, they will include instructions for insertion into the handbook, a “Log of Temporary Revisions”, and a “List of Effective Pages”. The “List of Effective Pages” shows the issue or revision status of all pages in the Handbook and should replace the previous List of Effective Pages in its entirety.

Temporary revisions are normally superseded and replaced by the next normal revision.

1.1.1.3 REVISION IDENTIFICATION

Each page of the handbook indicates the revision status at the lower inside corner. Revised pages will have the revision date as well as an alpha numeric character at the end of the document number (SK05001101 Revision A, for example).

Originally issued pages will have the words “Original Issue” after the document number.

When the majority of the pages in the Handbook have been revised, Epic Aircraft, LLC may reissue the Handbook in its entirety. In this case the word “Reissue” is added after the document number followed by a number indicating the reissue level (Reissue 1, for example). Revised pages will have an alpha numeric character following the reissue level (Reissue 1, Revision A for example).

Revised material on a page is indicated by a change bar in the outside page margin. Reissues of the Handbook will not have any change bars until subsequent revisions are made to the reissued pages.

1.1.1.4 REVISION SERVICE

Revision service for this handbook is provided at no cost for the Pilot’s Operating Handbook and FAA Approved Airplane Flight Manual assigned to an airplane. Additional copies of the Handbook or revision material can be obtained from Customer Service at the address below.

Epic Aircraft, LLC
22590 Nelson Road
Bend Municipal Airport
Bend, Oregon 97701
Phone: (541) 318-8849
Fax: (541) 382-5125

NOTE

Contact Customer Service immediately if it is found that the handbook is not current, temporary revisions are missing, or applicable supplements are not included.

1.1.2 SUPPLEMENTS

Section 9 SUPPLEMENTS of this handbook contains FAA approved supplements for optional equipment not provided with the standard airplane. Information, data, and procedures in a supplement add to, supersedes, or replaces similar data in the basic handbook.

The “Log of Supplements” page in Section 9 SUPPLEMENTS records any supplements and their revision status for optional equipment on the airplane.

Should the airplane be modified at a non-Epic Aircraft, LLC facility through an STC or other approval method, it is the owner’s responsibility to ensure the proper supplement is installed in the Handbook and that the supplement is properly recorded on the “Log of Supplements” page.

1.1.3 WARNING, CAUTION, AND NOTE

The terms Warning, Caution, and Note are used to identify important issues.

WARNING

WARNINGS ARE USED TO CALL ATTENTION TO OPERATING PROCEDURES WHICH, IF NOT STRICTLY OBSERVED, MAY RESULT IN PERSONAL INJURY OR LOSS OF LIFE.

CAUTION

CAUTIONS ARE USED TO CALL ATTENTION TO OPERATING PROCEDURES WHICH, IF NOT STRICTLY OBSERVED, MAY RESULT IN DAMAGE TO EQUIPMENT.

NOTE

Notes are used to highlight specific operating conditions or steps of a procedure.

1.2 AIRPLANE THREE VIEW

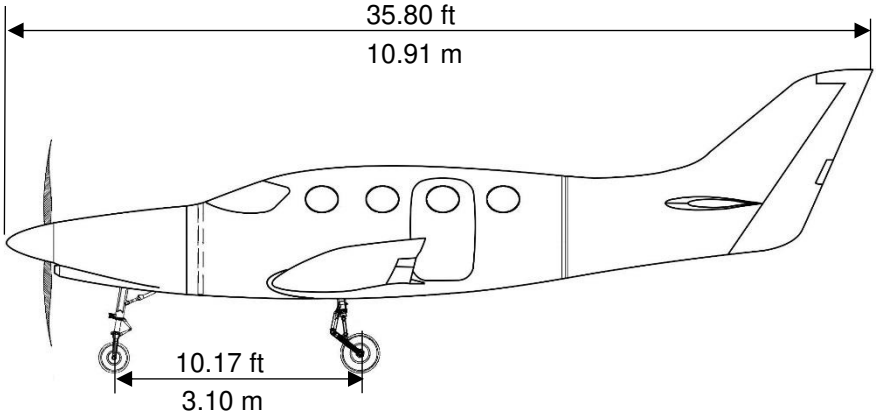

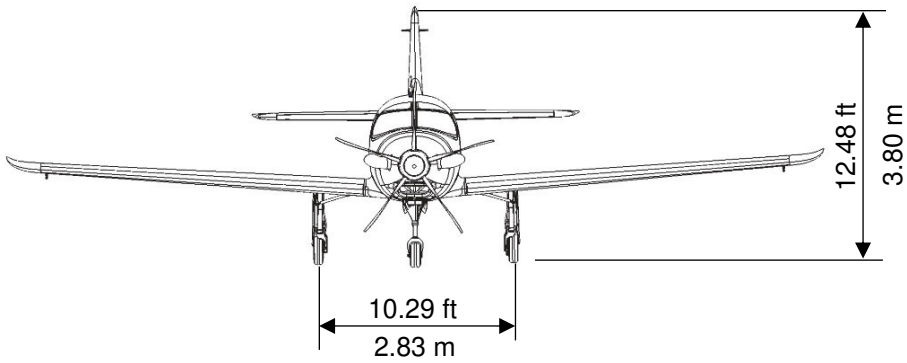

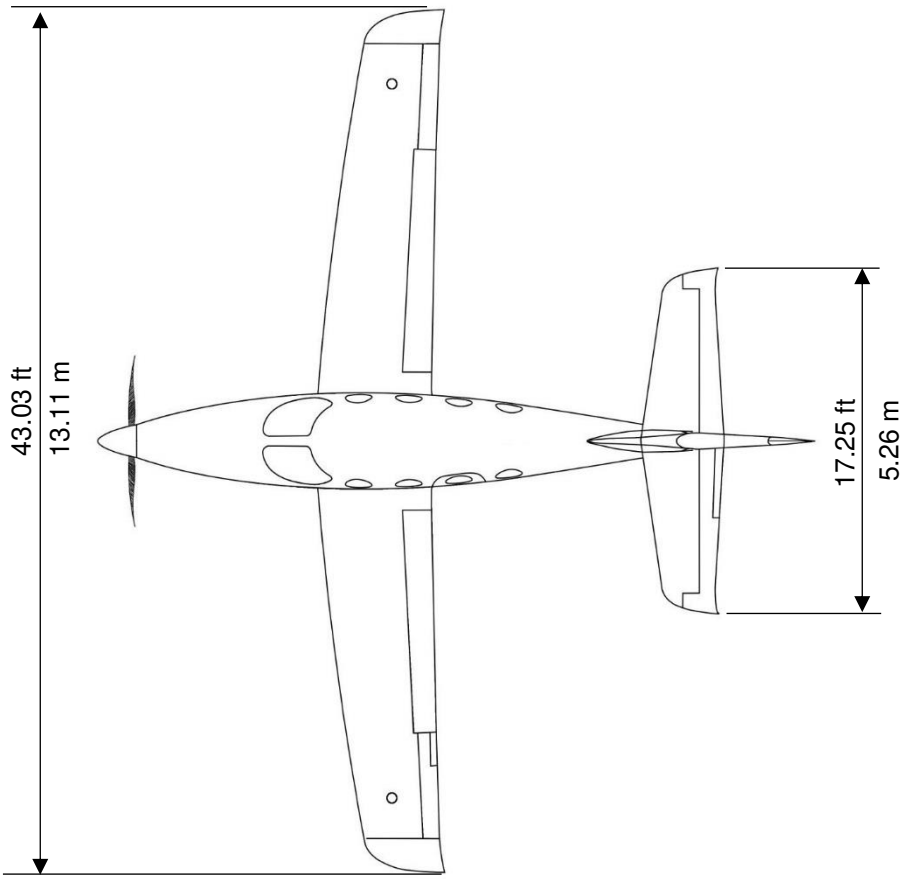
43.03 ft
13.11 m
17.25 ft
5.26 m

1.3 INTERIOR DIMENSIONS

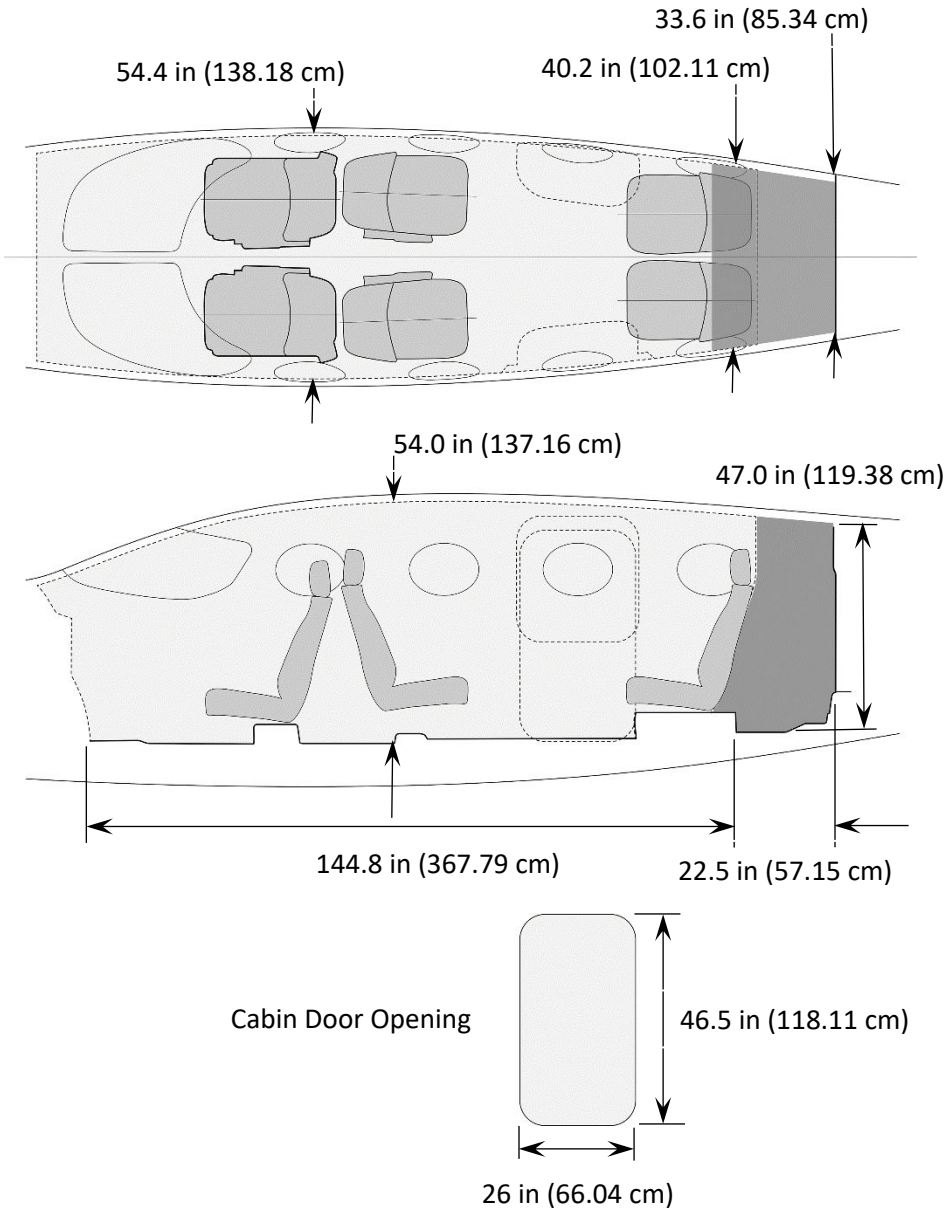

Location	Length in (cm)	Width in (cm)	Height in (cm)	Volume ft^3 (m^3)
Cabin and Baggage	167.0 (424.18)	54.4 (138.18)	54.0 (137.16)	202 (5.7)
Cabin	144.8 (367.79)	54.4 (138.18)	54.0 (137.16)	184 (5.2)
Baggage	22.5 (57.15)	36.9 (93.73)	47.0 (119.38)	18 (0.51)

1.4 TURNING RADIUS

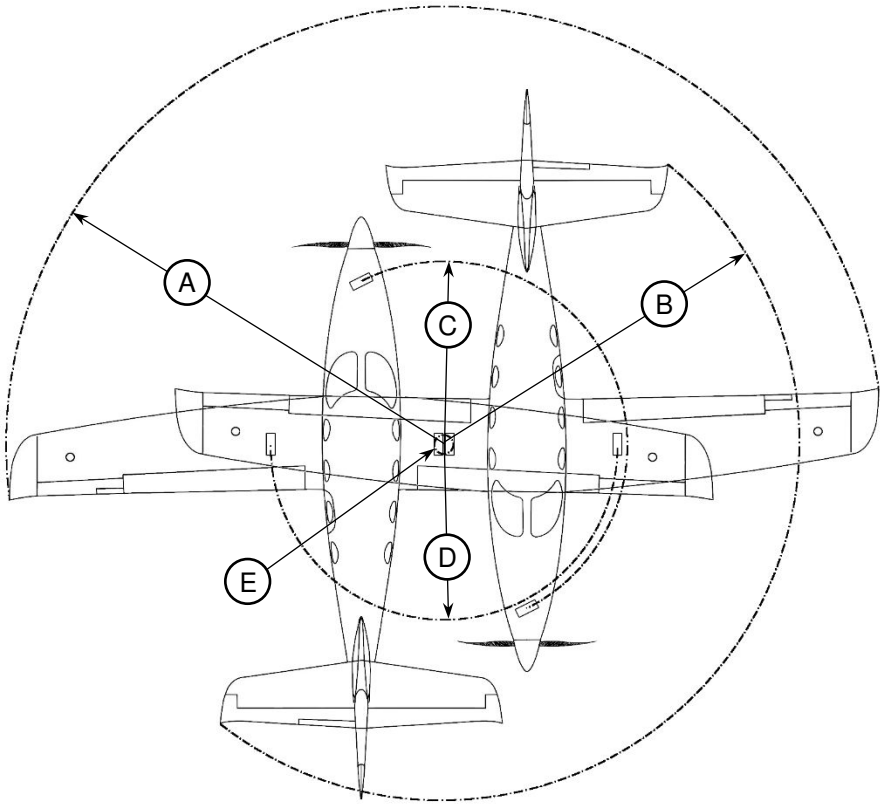

(A) Radius for Wing Tip ..... 27.3 ft (8.3 m)

(B) Radius for Horizontal Stabilizer ..... 22 ft (6.7 m)

(C) Radius for Nose Gear ..... 11.3 ft (3.4 m)

(D) Radius for Outside Gear ..... 10.8 ft (3.3 m)

(E) Radius for Inside Gear ..... 0.6 ft (0.2 m)

NOTE

Turning radii are calculated using one brake and partial power. Actual turning radii may vary as much as three feet.

1.5 DESCRIPTIVE DATA

1.5.1 ENGINE

Number of Engines..... 1
Engine Manufacturer .....Pratt and Whitney
Engine Model Number.....PT6A-67A
Engine Type:
Twin-shaft, free-turbine, reverse-flow turboprop engine with four axial and one centrifugal compressor, an annular combustion chamber, and a three-stage turbine where one stage drives the compressor and two stages power the propeller.
Horsepower Rating and Engine Speed:
Takeoff Power.....1,200 SHP
Maximum Continuous Power.....1,000 SHP
Compressor Turbine (N_G) Speed.....104% (39,000 RPM)
Propeller Speed (N_P)..... 1,700 RPM

1.5.2 PROPELLER

Number of Propellers 1
Propeller Manufacturer..... Hartzell
Propeller Model Number HC-E5A-3A/NC10245B
Number of Blades..... 5
Propeller Diameter ..... 105 in (2.67 m)
Propeller Type:
Hydraulically actuated, adjustable constant-speed propeller with full feathering and reversible pitch.
Propeller Governor ..... Pratt & Whitney

1.5.3 FUEL

Total Capacity.....278 US gal (1052 L)
Total Capacity Each Tank .....139 US gal (526 L)
Total Usable Fuel .....264 US gal (999 L)
Maximum Fuel Imbalance Between Tanks .....20 US gal
Approved Fuels:

- ASTM-D1655 JET A,
- MIL-DTL-83133 Grade JP-8
- Any other fuel which complies with the latest revision of Pratt & Whitney Service Bulletin 14004.

CAUTION

THE USE OF AVIATION GASOLINE (AVGAS) MUST BE RESTRICTED TO EMERGENCY PURPOSES ONLY. AVGAS MUST NOT BE USED FOR MORE THAN 150 CUMULATIVE HOURS DURING ANY PERIOD BETWEEN ENGINE OVERHAUL PERIODS.

NOTE

Use of AVGAS must be recorded in the engine logbook.

Anti-Icing Additive:

Anti-icing additive conforming to MIL-DTL-27686 or MIL-DTL-85470.

Anti-icing additives must be in compliance with the latest revision of Pratt & Whitney Service Bulletin 14004.

1.5.4 ENGINE OIL

Maximum System Capacity .....3 US gal (11.35 L)
Usable Capacity.....2.5 US gal (9.4 L)
Oil Grade or Specification:

Any oil conforming to MIL-PRF-23699G, Type II (5cSt) and as specified in the latest revision of Pratt and Whitney Service Bulletin 14001.

Refer to Section 8 for a list of approved engine oils current as of the time of publication.

1.5.5 MAXIMUM CERTIFICATED WEIGHTS

Towing Operations.....8,000 lb (3,629 kg)
Takeoff .....8,000 lb (3,629 kg)
Landing .....7,600 lb (3,231 kg)
Baggage Compartment.....200 lb (90 kg)

1.5.6 STANDARD AIRPLANE WEIGHTS

Empty Weight.....5,020 lb (2,277 kg)
Maximum Useful Load .....2,980 lb (1,352 kg)

1.5.7 CABIN, ENTRY, AND EXIT DIMENSIONS

Cabin Entry ..... 1 main
Cabin Exits.....1 main, 1 emergency exit
Entry Width .....26 in (0.7 m)
Entry Height .....46.5 in (1.2 m)
Maximum Cabin Width.....54.4 in (1.4 m)
Maximum Cabin Length.....167 in (4.2 m)
Maximum Cabin Height.....54 in (1.4 m)
Emergency Exit (1 over wing)..... 19 in x 26 in (0.5 m x 0.7 m)

1.5.8 SPECIFIC LOADINGS

Wing loading (at 8,000 lb (3,629 kg))..... 38.6 lb/ft^2 (188.5 kg/m^2)
Power loading (at 8,000 lb (3,629 kg) with T/O ESHP): ..... 6.3 lb/ESHP

1.5.9 NAVIGATION APPROVALS

The GFC 700 autopilot is approved for Category 1 precision approaches, approaches with vertical guidance, and non-precision approaches.

The G1000 NXi installed on this airplane is a GNSS (Global Navigation Satellite System) with a Satellite Based Augmentation System (SBAS) comprised of navigation sensors that meet the standards set forth in TSOC145a/ETSO-C145 (Sensors) and TSO-C146a/ETSO-C146 (Display Units) for Class 3 systems. The G1000 GNSS navigation system in this airplane is installed in accordance with AC 20-138D. When all equipment is operative, the Garmin G1000 NXi system provides two independent GNSS navigation systems. Failure of any of the above equipment or the posting of 'BOTH ON GPS1' or 'BOTH ON GPS2' annunciators indicates only one operational GNSS system.

NOTE

A "BOTH ON GPS1" or "BOTH ON GPS2" message does not necessarily mean that one GPS has failed. Refer to the MFD – GPS STATUS page to determine the state of the unused GPS.

NOTE

If "BOTH ON GPS1" or "BOTH ON GPS2" message is displayed, the system does not meet the requirements for airspace that requires dual GNSS navigation systems.

The G1000 NXi as installed in this airplane complies with the requirements of AC 20-138D and is approved for navigation using GNSS and GNSS/SBAS (within the coverage of a Satellite Based Augmentation System complying with ICAO Annex 10) for IFR enroute, terminal area, approach procedures with vertical guidance, and non-precision approach operations. The term GNSS (Global Navigation Satellite System) includes the U.S GPS as well as comparable systems operated by other countries. The term SBAS (Space Based Augmentation System) refers to systems such as the U.S. WAAS (Wide Area Augmentation System) as well as other satellite based augmentation systems operated by other countries.

The G1000 NXi as installed in this airplane complies with the equipment, performance, and functional requirements and is approved to conduct RNAV and RNP operations in accordance with the applicable requirements of the reference documents listed in the following table. This table is accurate at the time it was published. However, changes to operational rules, FAA advisory circulars, etc., are possible. The pilot is responsible to ensure compliance with current operational requirements.

Navigation Specification	Aircraft Specific Requirements
VFR/IFR enroute, terminal, approach	Navigation using GNSS and SBAS (within the coverage of a Satellite Based Augmentation System complying with ICAO Annex 10), for enroute, terminal, and approach (“GPS”, “or GPS”, and “RNAV (GPS)” with LPV, LP, LNAV/VNAV and LNAV minimums) operations within the U.S. National Airspace System in accordance with AC 20-138D and applicable criteria of AC 90-105A, AC 90-107, and AC 90-108. RF (radius to fix) legs up to a maximum indicated airspeed of 180 knots are supported. Barometric vertical navigation (Baro-VNAV) operations may be conducted if SBAS is unavailable or disabled. The Garmin G1000 NXi Integrated Flight Deck will provide automatic, temperature compensated glidepath vertical guidance and has been shown to meet the accuracy requirements for VFR/IFR enroute, terminal, and approach Baro-VNAV operations within the conterminous US and Alaska in accordance with the criteria in AC 20-138D. Complies with the criteria of AC 90-108 for use as a suitable RNAV system to: • Determine aircraft position relative to or distance from a VOR, TACAN, NDB, compass locator, DME fix, or a named fix defined by a VOR radial, TACAN course, NDB bearing, or compass locator bearing intersecting a VOR or localizer course. • Navigate to or from a VOR, TACAN, NDB, or compass locator. • Hold over a VOR, TACAN, NDB, compass locator, or DME fix. • Fly an arc based upon DME. Part 91 subpart K, 121, 125, and 135 operators require operational approval from the FAA.

Navigation Specification	Aircraft Specific Requirements
Oceanic/Remote (Class II Navigation)	As a primary means of navigation in accordance with AC 20-138D and applicable criteria of AC 90-105A when used in conjunction with an approved fault detection and exclusion (FDE) prediction program prior to flight.[1] Two GNSS navigation systems must be operational (or one GNSS navigation system for those routes requiring only one long range navigation sensor). This does not constitute an operational approval.
North Atlantic Track (NAT) High Level Airspace (HLA)	Complies with the navigation systems requirements (RNP-4) for North Atlantic Track (NAT) High Level Airspace (HLA) in accordance with AC 90-105A. This does not constitute an operational approval. *Additional communications equipment providing Controller Pilot Datalink Communication (CPDLC) and Automatic Dependent Surveillance – Contract (ADS-C) is required for NAT HLA operation.*
RNP-10 RNAV-10	As a primary means of navigation in accordance with AC 20-138D and applicable criteria of AC 90-105A when used in conjunction with an approved fault detection and exclusion (FDE) prediction program prior to flight.[1] The GNSS navigation system can be used without time limits and without reliance on other long-range navigation systems. Two GNSS navigation systems must be operational (or one GNSS navigation system for those routes requiring only one long range navigation sensor). This does not constitute an operational approval.
RNAV-5 B-RNAV P-RNAV	P-RNAV and B-RNAV/RNAV 5 operations in accordance with AC 90-96A CHG 1, JAA TGL-10 Rev 1, and EASA AMC 20-4A when used in conjunction with an approved fault detection and exclusion (FDE) prediction program prior to flight.[1] This does not constitute an operational approval.

Navigation Specification	Aircraft Specific Requirements
RNP-4	RNP-4 operations in accordance with AC 20-138D and applicable criteria of AC 90-105A when used in conjunction with an approved fault detection and exclusion (FDE) prediction program prior to flight.[1] The GNSS navigation system can be used without time limits and without reliance on other long-range navigation systems. Two GNSS navigation systems must be operational (or one GNSS navigation system for those routes requiring only one long range navigation sensor). Additional equipment may be required to obtain operational approval to utilize RNP-4 performance. This does not constitute an operational approval.
RNAV-2 RNAV-1 (US RNAV Types A & B)	U.S. Area Navigation (RNAV) routes, Departure Procedures (DPs), and Standard Terminal Arrivals (STARs) in accordance with the applicable criteria of AC 90-100A. This includes Q-Routes and T-Routes within the contiguous United States and RNAV 1 or RNAV 2 instrument departure procedures and STARS provided that: a. The GNSS navigation system is receiving usable signals from the GNSS sensor. b. The following messages are not displayed: • DEAD RECKONING Mode (DR) • INTEG (amber INT on PFD) c. SBAS coverage is verified to be available along the entire route of flight. Outside of SBAS coverage or if SBAS is not available, an approved FDE prediction program must be used prior to flight to verify adequate RAIM availability.[1] NOTE: This capability does not apply to over water RNAV routes (including the Q-routes in the Gulf of Mexico or Atlantic routes) or to Alaska VOR/DME RNAV routes (“JxxxR”).

NOTE 1: FDE/RAIM availability can be determined using:

Prediction Program	Internet Address or Program Details	Coverage Area
Garmin RAIM Prediction Tool	https://fly.garmin.com/fly-garmin/support/raim/	Worldwide
Garmin WFDE Prediction Program	Garmin WFDE Prediction program, part number 006-A0154-01 (010-G1000-00) or later approved version with Garmin GA36 and GA37 antennas selected	Worldwide
FAA Service Availability Prediction Tool	http://sapt.faa.gov	US only
Flight Service Station	1-800-WXBRIEF https://www.1800wxbrief.com	US only
AUGER GPS RAIM Prediction Tool	http://augur.ecacnav.com/augur/app/home	ECAC airspace only
Any other FDE/RAIM prediction program authorized by the appropriate governing authority.		

Garmin International holds an FAA Type 2 Letter of Acceptance (LOA) in accordance with AC 20-153A for database integrity, quality, and database management practices for the Navigation database. Flight crew and operators can view the LOA status at FlyGarmin.com then select “Type 2 LOA Status.” Navigation information is referenced to the WGS-84 reference system.

Boeing Digital Solutions, Inc. (previously Jeppesen Sanderson, Inc.) holds an FAA Type 2 Letter of Acceptance (LOA) in accordance with AC 20-153A for database integrity, quality, and database management practices for the Navigation database. Flight crew and operators can view the LOA status at jeppesen.com/certifications-and-letters-of-acceptance/m. Navigation information is referenced to the WGS-84 reference system.

Note that for some types of aircraft operation and for operation in non-U.S. airspace, separate operational approval(s) may be required in addition to equipment installation and airworthiness approval.

1.5.10 ADS-B

The G1000 NXi incorporates dual Mode S extended squitter transponders to provide ADS-B Out capability. The system transmits ADS-B Out information on 1090 MHz. This installation complies with the requirements of AC 20-165B (ADS-B Out) and has been shown to meet the equipment requirements of 14 CFR §91.227 when all required functions and components are operational.

The G1000 NXi incorporates the Garmin GTS 825 Traffic Advisory System or optional GTS 850/855 Traffic Alert and Collision System to provide ADS-B In traffic capability.

The G1000 NXi incorporates the Garmin GTX 345 DR Transponder to provide ADS-B In weather capability.

1.5.11 RVSM

The type design, reliability, and performance of this airplane model/engine combination has been evaluated in accordance with FAA Advisory Circular 91-85B, "Authorization of Aircraft and Operators for Flight in Reduced Vertical Separation Minimum (RVSM) Airspace", 29 January 2019, and is qualified for operators in RVSM airspace.

NOTE

Airworthiness Approval alone does not authorize flight into airspace for which RVSM Operation Approval is required. Operation Approval must be obtained in accordance with the appropriate governing authority.

1.6 ABBREVIATIONS AND TERMINOLOGY

1.6.1 METEOROLOGICAL TERMINOLOGY

IMC	Meteorological conditions expressed in terms of visibility, distance from cloud, and ceiling less than the minima specified for visual meteorological conditions.
ISA	International Standard Atmosphere (standard day) is an atmosphere where 1. The air is a dry perfect gas. 2. The temperature at sea level is 15°C (59°F). 3. The pressure at sea level is 29.92 inHg (1,013.2 mb).
MSL	Mean Sea Level is the average height of the sea for all stages of tide. In this AFM, altitude given as MSL is the altitude above the mean sea level. It is the altitude read from the altimeter when the altimeter's barometric adjustment has been set to the altimeter setting obtained from ground meteorological sources.
OAT	Outside Air Temperature is the free air or static temperature obtained from in-flight temperature indications or from ground meteorological sources. It is expressed in either °C or °F.
PA	Pressure Altitude is the altitude indicated by an altimeter when the altimeter's barometric scale has been set to 29.92 inHg (1,013.2 mb).
Standard Temperature	Standard Temperature is the temperature that would be found at a given pressure altitude in the standard atmosphere. It is 15°C (59°F) at sea level pressure altitude and decreases by 2°C (3.6°F) for each 1,000 ft. of altitude increase.

1.6.2 POWER TERMINOLOGY

Beta	Beta is the range of power lever positions that allow for setting the propeller blades at a flat or reverse pitch angle.
ESHP	Equivalent Shaft Horsepower is the combined power output by the propeller shaft and the jet thrust generated by the exhaust.
Feathering	Feathering is the action which reduces the drag of a propeller by positioning blades at the pitch angle allowing minimal drag.
GPU	Ground Power Unit
Ground Fine	Condition where the propeller is in flat pitch but not producing reverse thrust.
ITT	Inter-Turbine Temperature
MCP	Maximum Continuous Power is the maximum power that can be used continuously.
MOR	Manual Override
N_G	Gas generator rotation speed

N_P	Propeller rotation speed
Reverse Thrust	Reverse thrust is the rearward thrust produced when the propeller blade pitch angle is negative.
RPM	Revolutions Per Minute
SHP	Shaft Horsepower is the power output by the propeller shaft.
Takeoff Power	Takeoff Power is the maximum power that can be used during takeoff.
TRQ	Torque

1.6.3 PERFORMANCE AND FLIGHT PLANNING TERMINOLOGY

Climb Gradient	Climb gradient is the ratio of the change in height to the horizontal distance traversed during a portion of a climb.
Demonstrated Crosswind Velocity	Demonstrated crosswind velocity is the velocity of the crosswind component for which adequate control of the airplane during taxi, takeoff, and landing was demonstrated during certification testing. Demonstrated crosswind is not considered to be limiting.
g	One “g” is a quantity of acceleration equal to that of Earth’s gravity.
GPH	Gallons Per Hour is the amount of fuel (in gallons) consumed by the airplane in an hour.
Pusher Ice Mode	A setting of the Stall Prevention System. This mode adjusts the set points in the stall prevention system (stick shaker and stick pusher) to account for use of icing equipment. The critical angle of attack for stick shaker and stick pusher activation are decreased in this mode. Minimum airspeeds for stick shaker and stick pusher activation are increased in this mode. This mode is activated when either the de-ice boots or prop heat are turned on.
Unusable Fuel	Unusable fuel is the amount of fuel remaining in the airplane fuel tanks due to the geometry of the fuel tanks and lines that cannot safely be used in flight.
Usable Fuel	Usable fuel is the fuel available for flight planning.

1.6.4 AIRSPEED TERMINOLOGY

KCAS	Knots Calibrated Airspeed - The indicated airspeed expressed in knots corrected for position and instrument error. Knots calibrated airspeed is equal to KTAS in standard atmosphere at sea level.
KIAS	Knots Indicated Airspeed - The speed shown on the airspeed indicator and expressed in knots.
KTAS	Knots True Airspeed - The airspeed expressed in knots relative to undisturbed air which is KCAS corrected for altitude and temperature.

M_{MO}	Maximum Mach Operating Speed – The maximum Mach that may not be deliberately exceeded in normal flight operations.
V_{FE}	Maximum Flap Extended Speed - The highest speed permissible with wing flaps in a prescribed extended position.
V_{LE}	Maximum Landing Gear Extended Speed - The maximum speed at which an airplane can be safely flown with the landing gear extended.
V_{LO}	Maximum Landing Gear Operating Speed - The maximum speed at which the landing gear can be safely extended or retracted.
V_{MO}	Maximum Operating Speed - The maximum speed that may not be deliberately exceeded in normal flight operations.
V_O	Operating Maneuvering Speed - The maximum speed at which application of full or abrupt control movement will not overstress the airplane.
V_R	Rotation Speed - The speed at which the pilot makes a control input with the intention of lifting the airplane out of contact with the runway.
V_{S0}	Stalling Speed - The minimum steady flight speed at which the airplane is controllable in the landing configuration.
V_{S1}	Stalling Speed - The minimum steady flight speed obtained in a specific configuration.
V_X	Best Angle of Climb Speed - The airspeed which delivers the greatest gain in altitude per unit of horizontal distance.
V_Y	Best Rate of Climb Speed - The airspeed which delivers the greatest gain in altitude per unit of time.

1.6.5 WEIGHT AND BALANCE TERMINOLOGY

Arm	Arm is the horizontal distance from the reference datum to the center of gravity (CG) of an item. The airplane's arm is obtained by adding the airplane's individual moments and dividing the sum by the total weight.
Basic Empty Weight	Basic Empty Weight is the actual weight of the airplane including all operating equipment that has a fixed location in the airplane. The basic empty weight includes the weight of unusable fuel and full oil.
CG	Center of Gravity is the point at which the airplane will balance if suspended. Its distance from the reference datum is found by dividing the total moment by the total weight of the airplane.
Fuselage Station	Fuselage Station (FS) is a location along the airplane fuselage measured in inches from the reference datum and expressed as a number. For example, a point 123 inches aft of the reference datum is FS 123.

Maximum Takeoff Weight	The Maximum Takeoff Weight (MTOW) is the maximum weight approved at the start of the takeoff run.
Maximum Landing Weight	Maximum Landing Weight (MLW) is the maximum weight approved for the landing touchdown.
Maximum Towing Operations Weight	Maximum weight approved for towing the airplane.
Moment	Moment is the product of the weight of an item multiplied by its arm.
Reference Datum	Reference Datum is an imaginary vertical plane from which all horizontal distances are measured for balance purposes.

Reference Datum = FS 0.0

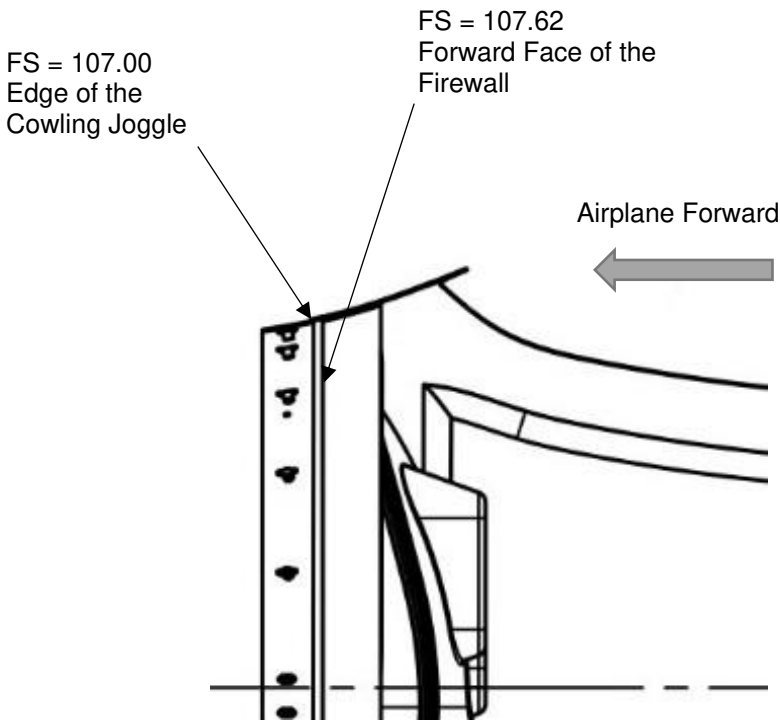

Useful Load	Useful Load is the basic empty weight subtracted from the maximum takeoff weight. It is the maximum allowable combined weight of pilot, passengers, usable fuel, and baggage.

1.6.6 AVIONICS TERMINOLOGY

ADAHRS	Air Data, Attitude, and Heading Reference System
ADF	Automatic Direction Finder
ADS-B	Automatic Dependent Surveillance - Broadcast
ADS-C	Automatic Dependent Surveillance - Contract
AET	Automatic Electric Trim
AFCS	Automatic Flight Control System
AR	Authorization Required
ATC	Air Traffic Control
Autopilot	Garmin GFC™ 700 Automatic Flight Control System (AFCS)
CDI	Course Deviation Indicator
CPDLC	Controller Pilot Data Link Communication
CWS	Control-Wheel Steering
DME	Distance Measuring Equipment
EDM	Emergency Descent Mode
EFB	Electronic Flight Bag
EGNOS	European Geostationary Navigation Overlay Service
EIS	Engine Indicating System
ESP	Electronic Stability & Protection
FDE	Fault Detection and Exclusion
FMS	Flight Management System
GAGAN	GPS Aided GEO Augmented Navigation
GDU	Garmin Display Unit (PFD or MFD)
GNSS	Global Navigation Satellite System
GPS	Global Positioning System
ICAO	International Civil Aviation Organization
IFR	Instrument Flight Rules
IMC	Instrument Meteorological Conditions
LDA	Localizer Directional Aid
LFE	Landing Field Elevation
LNAV	Lateral Navigation
LNAV+V	Lateral Navigation with Advisory Vertical Guidance
LNAV/VNAV	Lateral Navigation with Vertical Navigation
LOC	Localizer
LOC-BC	Localizer Backcourse
LP	Localizer Performance
LP+V	Localizer Performance with Advisory Vertical Guidance
LPV	Localizer Performance with Vertical Guidance

MET	Manual Electric Trim
MFD	Multi-Function Display
MMC	Multi-Media Card
NOTAM	Notice to Airmen
OBS	Omnibearing Select
OSP	Overspeed Protection
PABI	Pressure Altitude Broadcast Inhibit
PBN	Performance Based Navigation
PED	Portable Electronic Device
PFD	Primary Flight Display
RAIM	Receiver Autonomous Integrity Monitoring
RF Leg	Radius-to-Fix Leg of a Charted Instrument Procedure
RNAV	Area Navigation
RNP	Required Navigational Performance
SBAS	Satellite Based Augmentation System
SD	Secure Digital
SDF	Simplified Directional Facility
SUSP	Suspend
TAS	Traffic Awareness System
TAWS	Terrain Awareness and Warning System
TCAS	Traffic Collision Avoidance System
TCH	Threshold Crossing Height
TFR	Temporary Flight Restriction
TIS	Traffic Information System
TSO	Technical Standard Order
UAT	Universal Access Transmitter
USP	Underspeed Protection
VDI	Vertical Deviation Indicator
VFR	Visual Flight Rules
VMC	Visual Meteorological Conditions
VOR	VHF Omnidirectional Range
VRP	Visual Reporting Point
WAAS	Wide Area Augmentation System
WFDE	WAAS Fault Data Exclusion

1.7 CONVERSION TABLES AND GRAPHS

1.7.1 CONVERSION FACTORS

US and IMPERIAL UNITS CONVERTED to METRIC UNITS		
UNIT	MULTIPLY BY	CONVERTED TO
Inch	25.4	Millimeter
Feet	0.3048	Meter
US Gallon	3.785	Liter
Imperial Gallon	4.546	Liter
Pound	0.45359	Kilogram

METRIC UNITS CONVERTED to US and IMPERIAL UNITS		
UNIT	MULTIPLY BY	CONVERTED TO
Millimeter	0.03937	Inch
Meter	3.2808	Feet
Liter	0.264	US Gallon
Liter	0.22	Imperial Gallon
Kilogram	2.2046	Pound

1.7.2 INCHES VERSUS MILIMETERS GRAPH

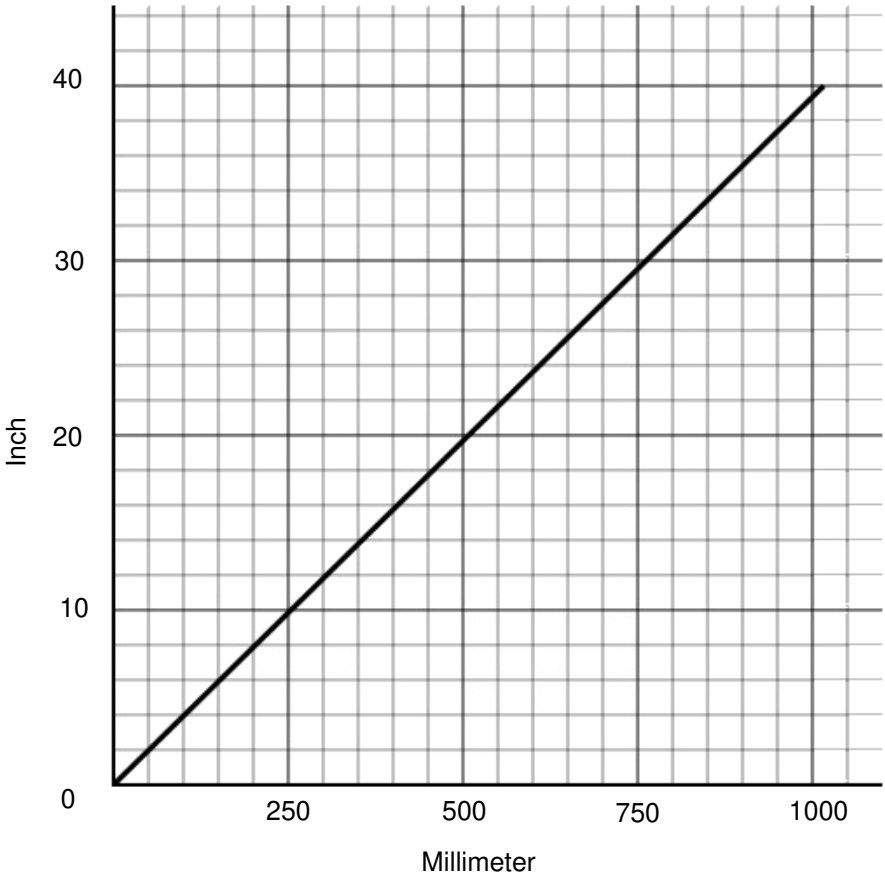

1.7.3 FEET VERSUS METERS CONVERSION GRAPH

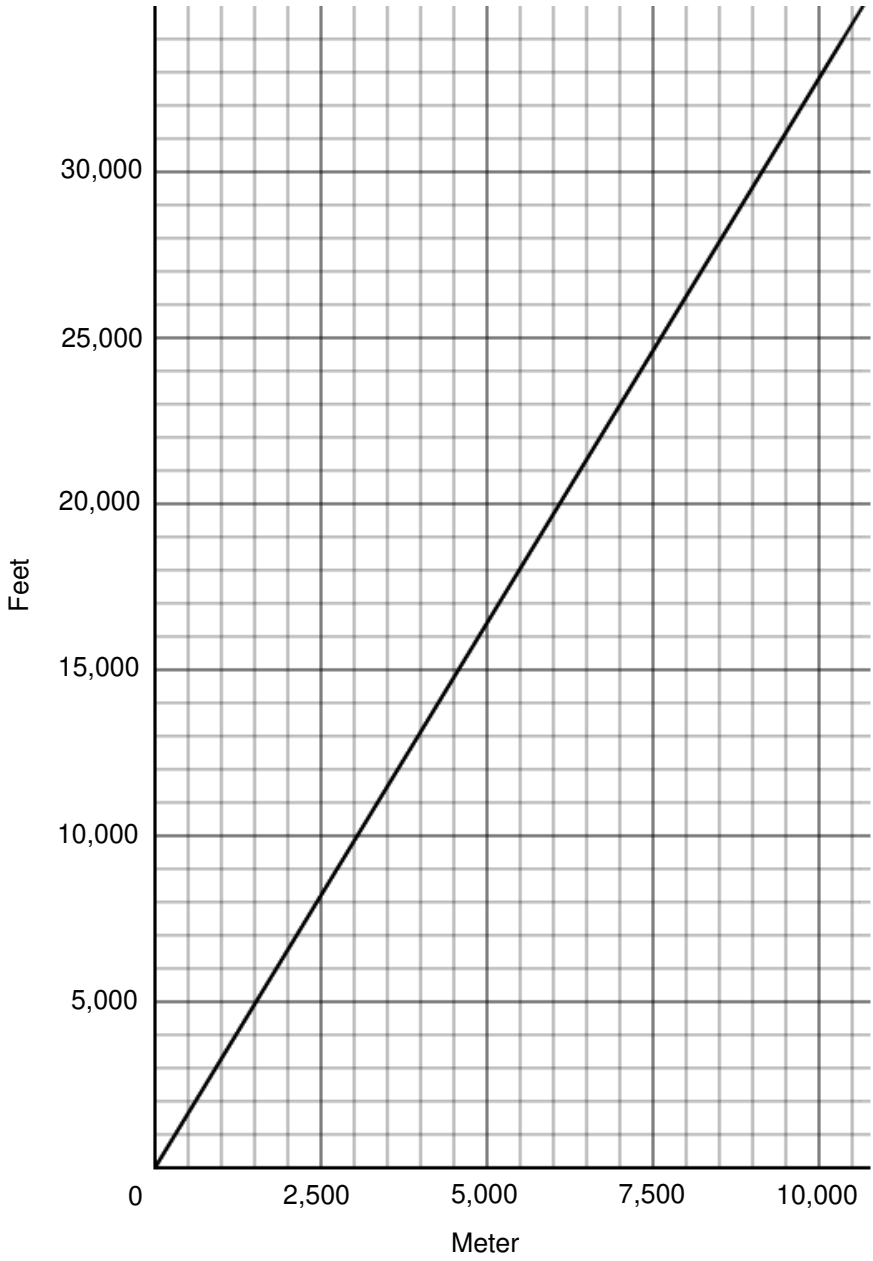

1.7.4 POUNDS VERSUS KILOGRAMS CONVERSION GRAPH

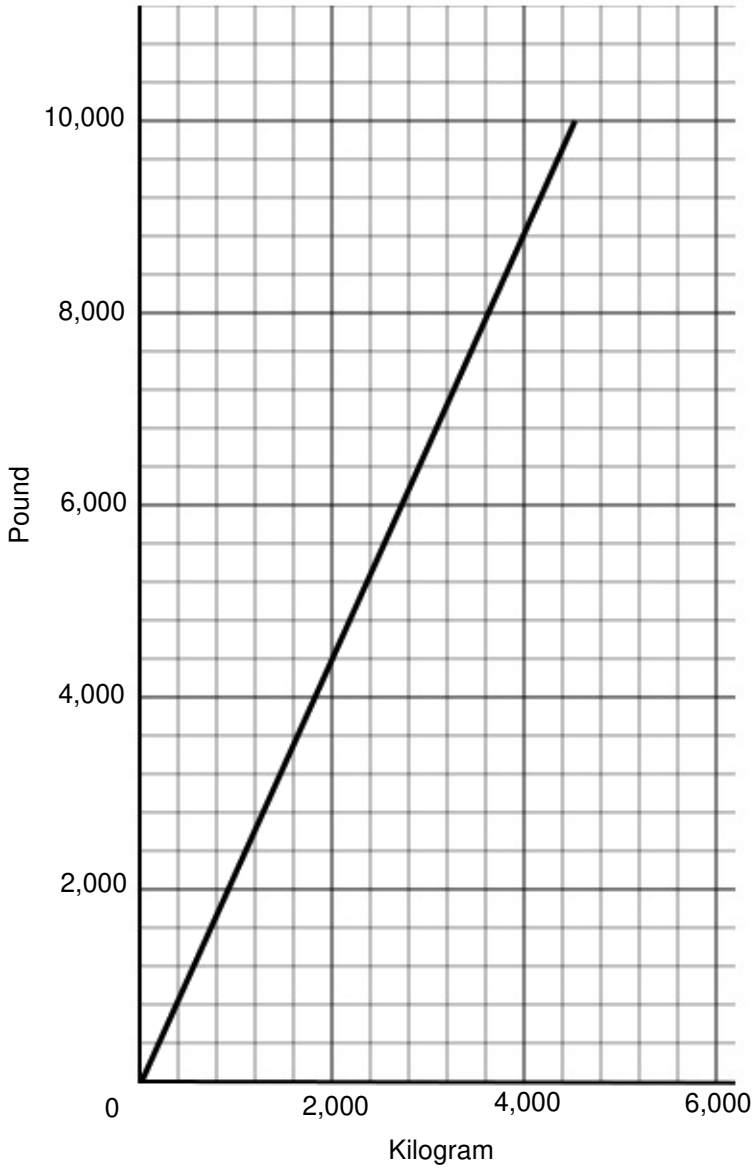

1.7.5 LITERS TO IMPERIAL GALLONS CONVERSION GRAPH

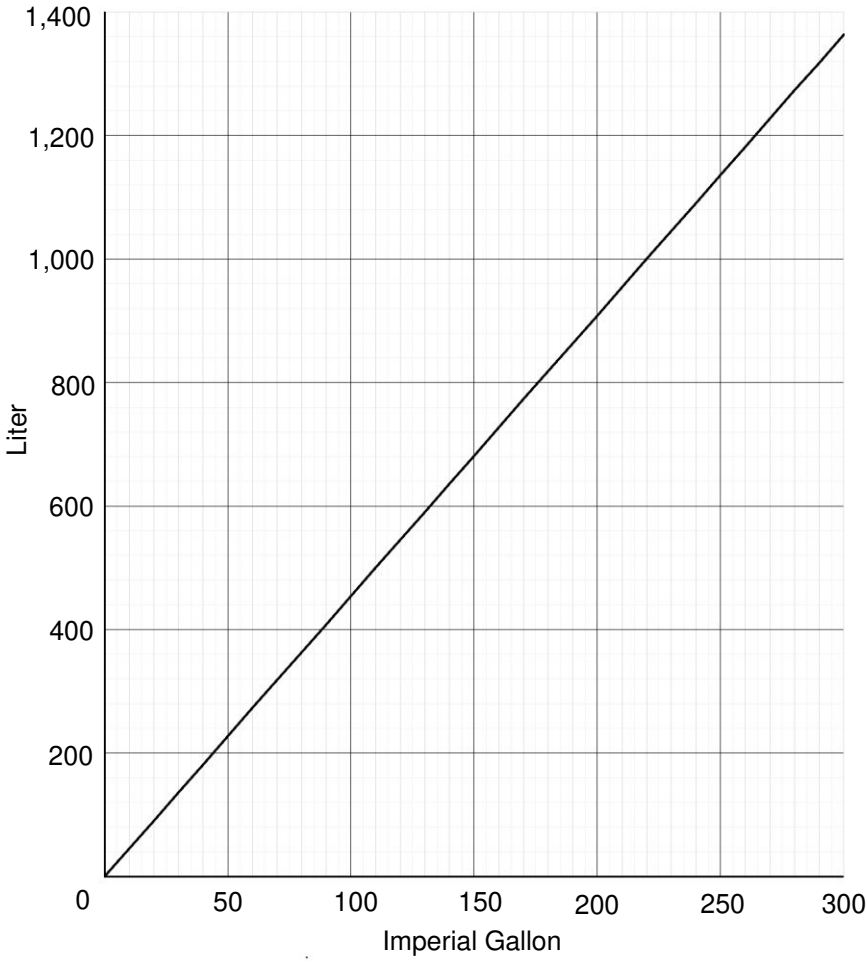

1.7.6 LITERS TO US GALLONS CONVERSION GRAPH

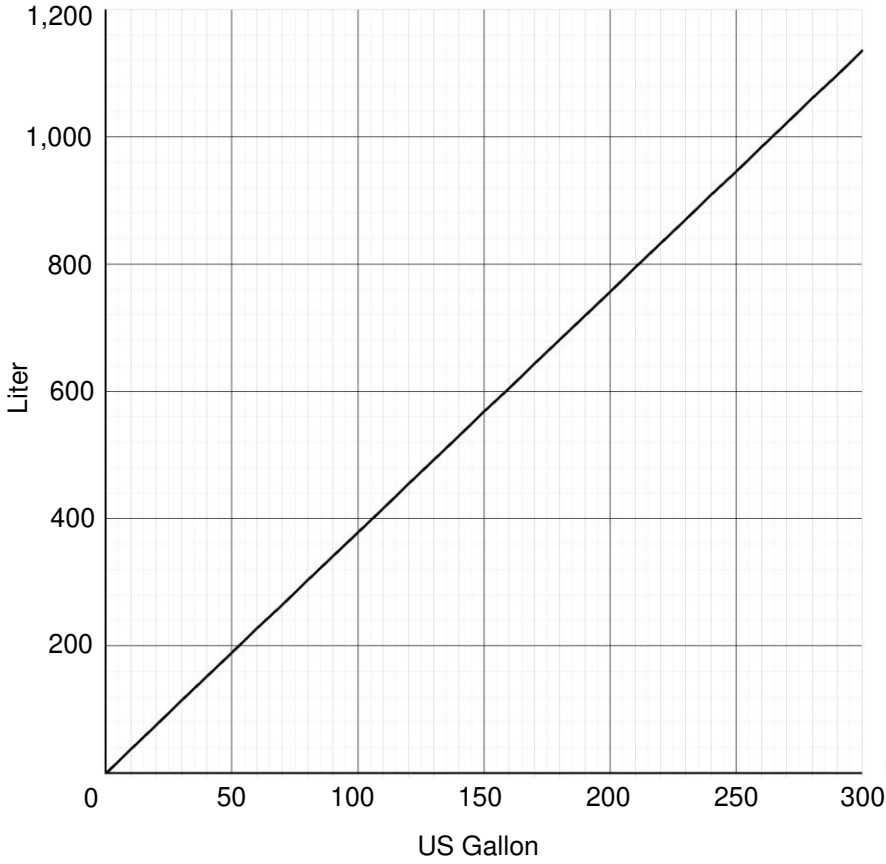

1.7.7 US GALLONS TO IMPERIAL GALLONS CONVERSION GRAPH

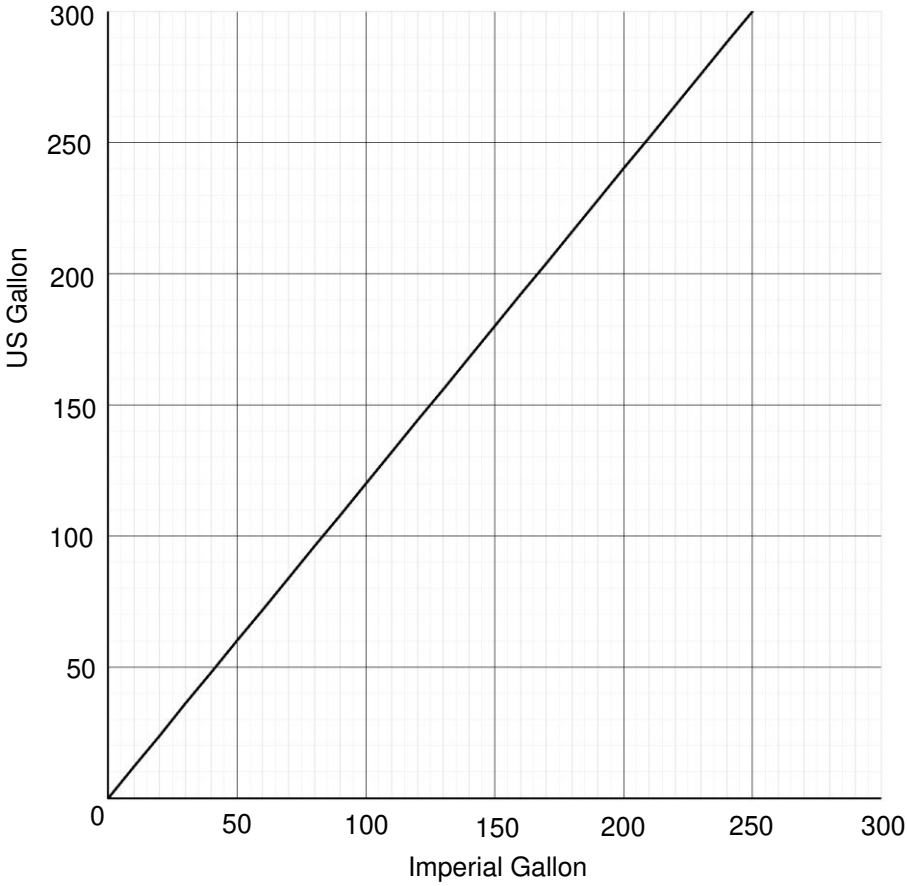

1.7.8 HECTOPASCAL TO INCHES OF MERCURY CONVERSION TABLE

Pressure – Hectopascal to Inches of Mercury at 32ºF (0ºC)										
hPa	0	1	2	3	4	5	6	7	8	9
930	27.46	27.49	27.52	27.55	27.58	27.61	27.64	27.27	27.7	27.73
940	27.76	27.79	27.82	27.85	27.88	27.91	27.94	27.96	27.99	28.02
950	28.05	28.08	28.11	28.14	28.17	28.20	28.23	28.26	28.29	28.32
960	28.35	28.38	28.41	28.44	28.47	28.50	28.53	28.56	28.59	28.61
970	28.64	28.67	28.70	28.73	28.76	28.79	28.82	28.85	28.88	28.91
980	28.94	28.97	29.00	29.03	29.06	29.09	29.12	29.15	29.18	29.21
990	29.23	29.26	29.29	29.32	29.35	29.38	29.41	29.44	29.47	29.50
1000	29.53	29.56	29.59	29.62	29.65	29.68	29.71	29.74	29.77	29.80
1010	29.83	29.85	29.88	29.91	29.94	29.97	30.00	30.03	30.06	30.09
1020	30.12	30.15	30.18	30.21	30.24	30.27	30.30	30.33	30.36	30.39
1030	30.42	30.45	30.47	30.50	30.53	30.56	30.59	30.62	30.65	30.68
1040	31.55	31.55	30.77	30.80	30.83	30.86	30.89	30.92	30.95	30.98
1050	31.84	31.84	31.07	31.10	31.12	31.15	31.18	31.21	31.24	31.27
1060	32.14	32.14	31.36	31.39	31.42	31.45	31.48	31.51	31.54	31.57
1070	32.43	32.44	31.66	31.69	31.72	31.74	31.77	31.80	31.83	31.86

1.7.9 CELSIUS TO FAHRENHEIT CONVERSION GRAPH

°F = (°C x 9/5) + 32
°C = (°F – 32) x 5/9

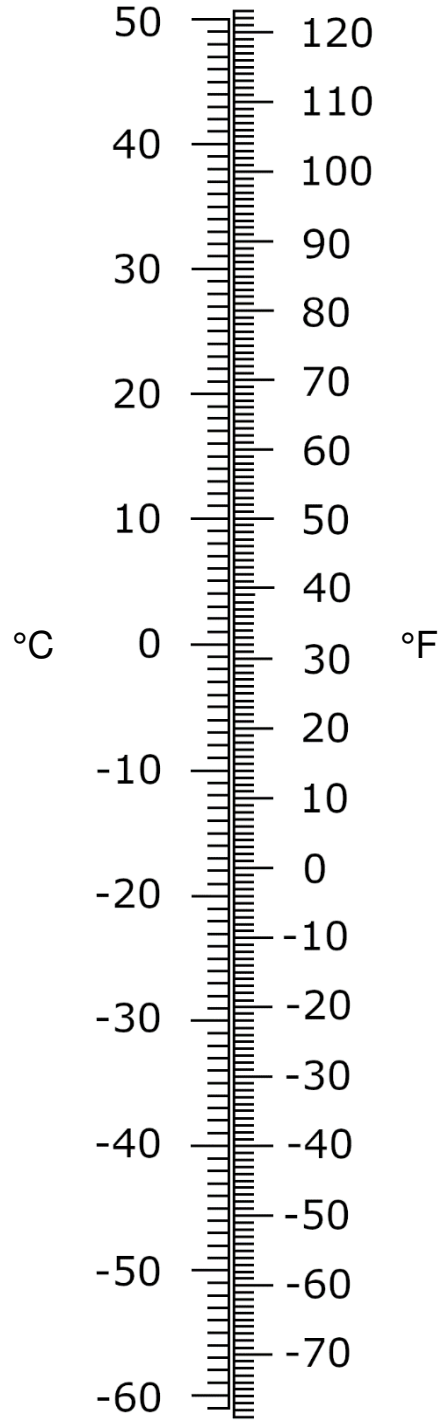

SECTION 2

LIMITATIONS

TABLE OF CONTENTS

2.1 GENERAL 3
2.2 AIRSPEED LIMITATIONS 3
2.3 POWERPLANT LIMITATIONS 4
2.3.1 ENGINE 4
2.3.2 FUEL 5
2.3.3 ENGINE OIL 6
2.3.4 PROPELLER 6
2.4 STARTER/GENERATOR AND ALTERNATOR LIMITATIONS 7
2.4.1 STARTER 7
2.4.2 GENERATOR 7
2.4.3 ALTERNATOR 7
2.5 WEIGHT AND CENTER OF GRAVITY LIMITATIONS 7
2.5.1 WEIGHT 7
2.5.2 CENTER OF GRAVITY 8
2.6 OPERATION LIMITATIONS 9
2.6.1 TEMPERATURE 9
2.6.2 MANEUVER 9
2.6.3 ALTITUDE OPERATION 9
2.6.4 FLIGHT LOAD FACTOR 9
2.6.5 AUTOPILOT 9
2.6.6 GARMIN G1000 NXi INTEGRATED AVIONICS SYSTEM 10
2.6.7 L3 AVIONICS SYSTEMS ESI-500 ELECTRONIC STANDBY INSTRUMENT SYSTEM 13
2.6.8 RVSM 14
2.6.9 ICING CONDITIONS 14
2.6.10 ICE PROTECTION 15
2.6.11 AIRFRAME 15
2.6.12 IN-FLIGHT CIRCUIT BREAKER USE 15
2.6.13 STALL PREVENTION SYSTEM PREFLIGHT TEST 16
2.6.14 OXYGEN 16
2.7 MISCELLANEOUS LIMITATIONS 17
2.7.1 MINIMUM CREW 17
2.7.2 MAXIMUM OCCUPANCY 17
2.7.3 DOOR 17
2.7.4 EMERGENCY EXIT 17
2.7.5 SMOKING 17
2.7.6 OAT INDICATIONS 17
2.7.7 HEADSET 17
2.7.8 SEATS 17

2.7.9 GLARE SHIELD 17
2.8 MARKINGS 18
2.8.1 INDICATED AIRSPEED 18
2.8.2 ENGINE INSTRUMENTS AND SYSTEM INDICATIONS 19
2.9 PLACARDS 20
2.9.1 EXTERIOR PLACARDS 20
2.9.2 INTERIOR PLACARDS 24
2.10 KINDS OF OPERATION 32

2.1 GENERAL

This Section of the airplane Pilot's Operating Handbook contains the various operating limitations, instrument markings, color coding, and basic placards necessary for the safe operation of the airplane.

The limitations included in this Section have been approved by the Federal Aviation Administration in accordance with 14 CFR Section 21.29.

This airplane must be flown in compliance with the limits specified by placards or markings and with those given in this Section and throughout the Pilot's Operating Handbook.

Refer to Section 9 SUPPLEMENTS of this handbook for the limitations for optional systems.

2.2 AIRSPEED LIMITATIONS

	Speed	KIAS	Remarks
M_{MO}	Maximum Mach operating speed	0.6 Mach	
V_{MO}	Maximum operating speed	270	
V_O	Maneuvering operating speed	170	Do not apply full or abrupt control movements above this speed.
V_{FE}	Maximum flaps extended speed: T/O FULL	 180 130	
V_{LO}	Maximum landing gear operation speed	150	Do not extend or retract the landing gear above this speed.
V_{LE}	Maximum landing gear extended speed	150	Do not exceed this speed with the landing gear extended.
	Minimum speed with autopilot engaged Flaps UP Flaps T/O Flaps FULL	 115 110 95	Do not operate below these speeds with the autopilot engaged.

2.3 POWERPLANT LIMITATIONS

2.3.1 ENGINE

OPERATING CONDITION	SHP	TORQUE % (1)	MAX ITT °C	N_G %	N_P RPM	OIL PRESS PSI (2)	OIL TEMP °C (7)(8)
STARTING	—	—	1000 (3)	—	—	200 (max)	-40 (min)
IDLE	—	—	750	51 (min)	—	60 (min)	-40 to 110
TAKEOFF (5)	1200	100	850	104	1700 (9)	90 to 135	10 to 110
MAX CONT. **MAX CLIMB** **MAX CRUISE**	1000 (6)	98	840	104	1700 (9)	90 to 135	10 to 105
MAX REVERSE	900	—	760	—	1650	90 to 135	10 to 105
TRANSIENT	—	137% (4)	870 (4)	104	1870 (4)	40 to 200 (4)	-40 to 110

NOTES:
(1) Torque limit applies within range of 1000–1700 propeller rpm (N_P). Below 1000 propeller rpm, torque is limited to 54%.
(2) Normal oil pressure is 90 to 135 psi at gas generator speeds above 72% N_G. With engine torque below 81%, minimum oil pressure is 85 psi at normal oil temperature (60 to 70 °C). Oil pressures under 90 psi are undesirable. Under emergency conditions, to complete a flight, a lower oil pressure limit of 60 psi is permissible at reduced power level not exceeding 54% torque. Oil pressures below 60 psi are unsafe and require that a landing be made at the nearest suitable airport, using the minimum power required to maintain flight.
(3) These values are time limited to 5 seconds.
(4) These values are time limited to 20 seconds.
(5) These values are time limited to 5 minutes.
(6) 83.3% torque at 1700 RPM or 88.5% torque at 1600 RPM
(7) For increased service life of engine oil, an oil temperature below 80°C is recommended.
(8) Oil temperature limits are -40°C to 105°C with limited periods of 10 minutes at 105°C to 110°C.
(9) Propeller Np is plus or minus 30 RPM.

2.3.2 FUEL

Maximum Fuel Imbalance Between Tanks..... 20 US gal
Approved Fuels:

- ASTM-D1655 JET A,
- MIL-DTL-83133 Grade JP-8
- Any other fuel which complies with the latest revision of Pratt & Whitney Service Bulletin 14004.

CAUTION

THE USE OF AVIATION GASOLINE (AVGAS) MUST BE RESTRICTED TO EMERGENCY PURPOSES ONLY. AVGAS MUST NOT BE USED FOR MORE THAN 150 CUMULATIVE HOURS DURING ANY PERIOD BETWEEN ENGINE OVERHAUL PERIODS.

NOTE

Use of AVGAS must be recorded in the engine logbook.

Anti-Icing Additive:

Anti-icing additive must be used for all flight operations in ambient temperatures below 0ºC.

WARNING

OPERATING IN AMBIENT TEMPERATURES LESS THAN 0ºC WITHOUT FOLLOWING THE PROCEDURE TO ADD ANTI-ICING ADDITIVES MAY LEAD TO ICE IN THE FUEL SYSTEM WHICH MAY EVENTUALLY BLOCK THE DELIVERY LINES AND COMPONENTS OF THE FUEL SYSTEM, INCLUDING THE FUEL FILTER, SUBSEQUENTLY RESTRICTING OR STOPPING THE FLOW OF FUEL TO THE ENGINE.

Anti-icing additive must conform to MIL-DTL-27686 or MIL-DTL-85470.

Anti-icing additives must be in compliance with the latest revision of Pratt & Whitney Service Bulletin 14004.

Additive concentration must be between a minimum of 0.06% and a maximum of 0.15% by volume.

CAUTION

THE CORRECT MIX OF ANTI-ICING ADDITIVE WITH THE FUEL IS IMPORTANT. CONCENTRATIONS OF MORE THAN THE MAXIMUM (0.15% BY VOLUME) WILL CAUSE DAMAGE TO THE PROTECTIVE PRIMER AND SEALANTS OF THE FUEL TANKS. DAMAGE WILL OCCUR IN THE FUEL SYSTEM AND ENGINE COMPONENTS. REFER TO SECTION 8 HANDLING, SERVICING, AND MAINTENANCE FOR ADDITIONAL INFORMATION.

2.3.3 ENGINE OIL

Oil grade or specification:

Any oil conforming to MIL-PRF-23699G, Type II (5cSt) and as specified in the latest revision of Pratt and Whitney Service Bulletin 14001.

Refer to Section 8 for a list of approved engine oils current as of the time of publication.

2.3.4 PROPELLER

Propeller operating limits (Np)

Maximum Normal ..... 1700 RPM
(plus or minus 30 RPM)
Maximum Transient: ..... 1870 RPM
(limited to 20 sec)
Maximum Reverse ..... 1650 RPM

Operation of the propeller in the POWER lever BETA range is prohibited in flight.

The POWER lever must not be lifted over the gate into the BETA range on the ground when the engine is not running.

Stabilized operation on the ground between 401 and 900 RPM is prohibited.

WARNING

STABILIZED GROUND OPERATION WITHIN THE PROPELLER RESTRICTED RPM RANGE (401-900 RPM) CAN GENERATE HIGH PROPELLER STRESSES AND RESULT IN PROPELLER FAILURE, AND LOSS OF CONTROL OF THE AIRPLANE.

2.4 STARTER/GENERATOR AND ALTERNATOR LIMITATIONS

2.4.1 STARTER

The maximum starter engagement and minimum cooling times are as follows:

Start attempt	Maximum starter engagement time	Minimum cooling time
1	30 sec	1 min
2	30 sec	1 min
3	30 sec	30 min

NOTE
During a normal start, starter engagement time ends at light-off.

If the engine does not start after 3 attempts, wait 30 minutes before attempting the above start sequence again.

During the start cycle the voltage must remain at or above 16.5 volts or the start must be aborted.

CAUTION

THE STARTER/GENERATOR MAY BE DAMAGED IF IT DOES NOT ACCELERATE THE ENGINE A MINIMUM OF 1 PERCENT N_G PER SECOND.

2.4.2 GENERATOR

Maximum Generator Load
Ground.....200 Amps
Flight.....300 Amps

2.4.3 ALTERNATOR

Maximum Alternator Load.....41 Amps

NOTE

Alternator output is internally limited to 41 Amps. Additional load will result in output voltage being reduced.

Maximum altitude for alternator operation is FL190 and all alternator operation is limited to one hour.

2.5 WEIGHT AND CENTER OF GRAVITY LIMITATIONS

2.5.1 WEIGHT

Maximum Weight for Towing Operations .....8000 lb (3629 kg)
Maximum Takeoff Weight.....8000 lb (3629 kg)
Maximum Landing Weight .....7600 lb (3447 kg)
Maximum Weight in Baggage Compartment.....200 lb (90 kg)

2.5.2 CENTER OF GRAVITY



2.6 OPERATION LIMITATIONS

2.6.1 TEMPERATURE

Operating Temperature

-54°C (-65°F) to 49°C (120°F), 0% to 100% relative humidity

2.6.2 MANEUVER

This airplane is certified in the Utility category.

Only maneuvers required for normal flight are approved including normal stalls, chandelles, lazy eights, and turns with the angle of bank limited to 90 degrees.

Aerobatic maneuvers are prohibited.

Intentional spins are prohibited.

2.6.3 ALTITUDE OPERATION

Maximum Operating Altitude FL340
Maximum Positive Cabin Pressure Differential ..... 6.6 psid

2.6.4 FLIGHT LOAD FACTOR

All Flap Positions .....+4.4g, -1.76g

2.6.5 AUTOPILOT

The AFCS preflight test must successfully complete prior to use of the autopilot and flight director or manual electric trim.

The autopilot and yaw damper must be OFF during takeoff and landing.

Minimum Autopilot Speed
Flaps UP .....115 KIAS
Flaps T/O .....110 KIAS
Flaps FULL .....95 KIAS

Autopilot Minimum-Use Height:
Takeoff and Climb.....400 ft AGL
Enroute and Descent.....800 ft AGL
Approach (GP or GS Mode) ..... Higher of 200 ft AGL or Approach MDA, DA, DH
Approach (FLC, VS, PIT or ALT Mode)..... Higher of 400 ft AGL or Approach MDA

2.6.6 GARMIN G1000 NXi INTEGRATED AVIONICS SYSTEM

2.6.6.1 GENERAL

The appropriate revision of the Garmin G1000 NXi Cockpit Reference Guide (p/n 190-02290-XX, where X can be any digit from 0 to 9) must be immediately available to the pilot during flight. The system software loader card revision (p/n 006-B2180-XX, where X can be any digit from 0 to 9) must be appropriate for the system software version displayed on the equipment.

The G1000 NXi must be turned on and operated for at least 30 minutes before takeoff if ground outside air temperature is -40°C (-40°F) or below.

Use of the MFD checklists as the only set of onboard airplane checklists is prohibited. POH checklists must be onboard the airplane. The MFD Checklist display is advisory only. It cannot contradict the POH/AFM checklists and supplements the Pilot's Operating Handbook checklists.

Use of the NAVIGATION MAP page for pilotage navigation is prohibited. The NAVIGATION MAP is intended only to enhance situational awareness.

Use of SAFETAXI, FLITECHARTS, CHARTVIEW, or SURFACEWATCH functions as the basis for ground maneuvering is prohibited. These functions have not been qualified to be used as an airport moving map display (AMMD) and should only be used to improve pilot situational awareness during ground operations.

Use of the Terrain Proximity information for primary terrain avoidance is prohibited. The Terrain Proximity Map is intended only to enhance situational awareness.

Datalink weather information displayed by the G1000 NXi system is limited to supplemental use only. XM, Garmin Connext, or FIS-B weather data is not a source of official weather information. Use of the NEXRAD, PRECIP, XM LTNG and DL LTNG (Datalink Lightning) data on the MAP – NAVIGATION MAP, MAP – WEATHER DATA LINK (XM), MAP – WEATHER DATA LINK (CNXT), and MAP – WEATHER DATA LINK (FIS-B) pages for hazardous weather, e.g., thunderstorm penetration, is prohibited.

NEXRAD, PRECIP, XM LTNG and DL LTNG information on the MAP – NAVIGATION MAP, MAP – WEATHER DATA LINK (XM), MAP – WEATHER DATA LINK (CNXT), and MAP – WEATHER DATA LINK (FIS-B) pages is intended only as an aid to enhance situational awareness of hazardous weather, not penetration. It is the pilot's responsibility to avoid hazardous weather using official weather data sources.

Use of the Synthetic Vision System (SVS) for flight guidance, navigation, traffic avoidance, or terrain avoidance is prohibited. Maneuvering the airplane in any phase of flight such as taxi, takeoff, approach, landing, or roll out must not be predicated on the SVS imagery. The Synthetic Vision System is not intended to be used independently of traditional attitude instrumentation. Consequently, SVS is disabled when traditional attitude instrumentation is not available. Otherwise, the traditional attitude instrumentation will always be visible in the foreground with SVS features in the background.

The pilot is responsible to see and avoid traffic without TAS or ADS-B traffic reliance. TAS and ADS-B traffic presentations are for advisory use only to aid in visually acquiring traffic. TAS and ADS-B traffic information must not be the only basis for traffic avoidance maneuvers.

2.6.6.2 ATTITUDE AND HEADING REFERENCE SYSTEM (ADAHRS)

NOTE

This section only refers to the AHRS portion of the ADAHRS system.

The airplane must not operate in the regions listed below. Flying in these regions may lead to loss of attitude or heading information, and possibly even loss of airplane control.

NOTE

Alternative procedures must be established for dispatch if the GEO LIMITS system message advisory is displayed.

Excluded Regions	Latitude	Longitude
North	North of 72° N	All longitudes
	North of 70° N	Between 70° W and 128° W. (Northern Canada)
	North of 70° N	Between 85° E and 114° E. (Northern Russia)
	North of 65° N	Between 75° W and 120° W. (Northern Canada)
South	South of 70° S	All longitude
	South of 55° S	Between 120° E and 165° E. (South of Australia and New Zealand)

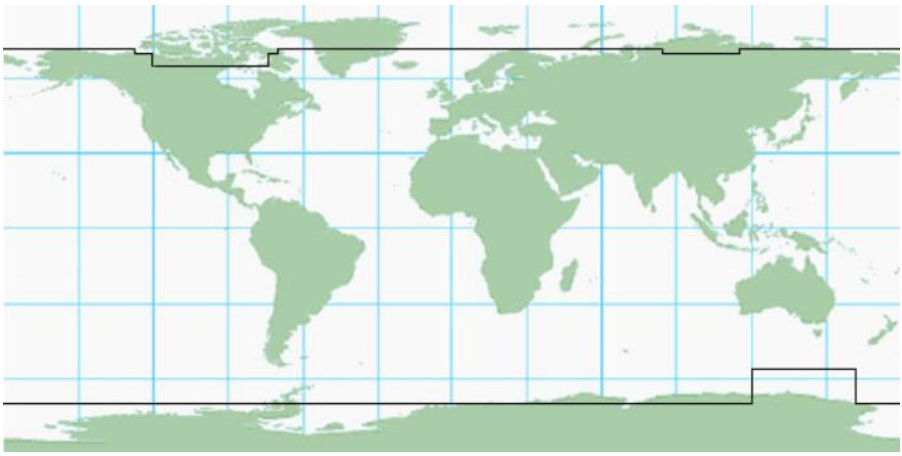

2.6.6.3 NAVIGATION

GNSS/SBAS based IFR oceanic, enroute, and terminal navigation is prohibited unless the flight crew verifies and uses a valid, compatible, and current Navigation database or verifies each waypoint for accuracy by reference to current approved data.

Manual entry of waypoints using latitude/longitude or place/bearing is prohibited for published RNP and RNAV routes.

Deletion of the arrival airport or runway waypoint within a loaded arrival procedure is prohibited. Arrival procedures loaded into the G1000 NXi FMS must be associated with the destination airport.

Instrument approach navigation predicated upon the GNSS/SBAS sensor must be accomplished in accordance with the following:

a. Approved instrument approach procedures must be retrieved from the GPS equipment database, and the GNSS equipment database must incorporate the current update cycle.
b. Integrity information from Satellite Based Augmentation Systems (SBAS) or Receiver Autonomous Integrity Monitoring (RAIM) must be available at the Final Approach Fix. For flight planning purposes in areas where SBAS coverage is not available, the pilot must check RAIM availability prior to initiating the approach.
c. Use of the GNSS/SBAS sensors to provide navigation guidance during the final approach segment of an ILS, LOC, LOC-BC, LDA, SDF or any other type of approach not approved for GNSS overlay is not authorized.
d. VOR/LOC/GS navigation data must be displayed when flying approaches not approved for GNSS.
e. Advisory Vertical Guidance ("+V") must only be utilized for advisory information only. Use of Advisory Vertical Guidance does not guarantee step-down fix altitude protection, or arrival at approach minimums in normal position to land.
f. IFR approach approval using the GNSS/SBAS sensor is limited to published approaches within the U.S. National Airspace System. Approaches to airports in other airspace are not approved unless authorized by the appropriate governing authority.

The barometric altimeter must be used as the primary altitude reference for all Baro-VNAV operations, including instrument approach procedure step-down fixes. Use of Baro-VNAV to a DA is not authorized with a remote altimeter setting; a current altimeter setting for the landing airport is required. When using remote altimeter minima, the Baro-VNAV function may be used to the published LNAV MDA.

2.6.7 L3 AVIONICS SYSTEMS ESI-500 ELECTRONIC STANDBY INSTRUMENT SYSTEM

The L3 Aviation Systems Genesis™ ESI-500 Electronic Standby Instrument System Pilot's Guide (p/n 0040-15000-01, Revision B), or any later version as applicable, must be immediately available to the pilot during flight.

2.6.7.1 INSTRUMENT METEROLOGICAL CONDITIONS (IMC)

Do not enter Instrument meteorological conditions (IMC) if the ESI-500 is showing the battery symbol in amber, an amber or red “X” over the battery symbol, or a “CAL DUE” message by the battery symbol.

2.6.8 RVSM

2.6.8.1 RVSM EQUIPMENT

In order to fly in RVSM airspace, the following equipment is required:

- #1 Air Data Attitude Heading Reference System [ADAHRS1]
- #2 Air Data Attitude Heading Reference System [ADAHRS2]
- Two (2) GDU 1XXX Displays [PFD1, PFD2, MFD]
- One (1) Autopilot with Altitude Alert Capabilities [AFCS]
- One (1) Secondary Surveillance Reporting System [Transponder]

2.6.8.2 STANDBY SYSTEM

Flight in RVSM airspace is prohibited if using standby system for altitude reference.

2.6.8.3 ALTITUDE DISPLAY DIFFERENCES

During normal RVSM operations, the Pilot's and Copilot's displayed altitude must remain within 200 feet of each other at all times (at a minimum, cross-cockpit checks should be performed hourly). If the displayed altitudes deviate by more than 200 feet, RVSM operation is NOT permitted.

2.6.8.4 ALTITUDE REPORTING

During normal RVSM operations, the altimetry system being used to control the aircraft should be selected as the input to the altitude reporting transponder transmitting information to ATC.

2.6.8.5 AUTOMATIC HOLD PERFORMANCE

During RVSM operations, if the autopilot cannot hold altitude to within +/- 65 feet of the assigned flight level at all times during steady, level flight in non-turbulent conditions, flight in RVSM airspace must be discontinued.

2.6.8.6 STATIC PORTS

RVSM operations are prohibited if any damage or surface irregularities are found within 12 inches of either static port.

2.6.9 ICING CONDITIONS

Flight into known icing conditions is prohibited.

Landing with flaps UP or FULL when in icing conditions is prohibited.

2.6.10 ICE PROTECTION

2.6.10.1 DE-ICE BOOTS

De-ice boot operation is limited to a maximum OAT of 15°C (59°F).

De-ice boot minimum operating temperature is -40°C (-40°F).

Minimum torque when operating de-ice boots is 15%.

Minimum torque when operating de-ice boots above 10,000 ft is 35%.

2.6.10.2 WINDSHIELD HEAT

Windshield heat operation is limited to a maximum OAT of 5°C (41°F).

2.6.10.3 INERTIAL SEPARATOR

Inertial Separator actuation (switching from OFF to ON and from ON to OFF) in flight is limited to a maximum OAT of 15°C (59°F).

2.6.11 AIRFRAME

Use of DEFROST together with EMERG PRESS is prohibited.

2.6.11.1 FLAP OPERATION

Flap extension above FL180 is prohibited.

Flight is prohibited with any flap hinge covers missing or damaged.

Landing with flaps UP or FULL and Pusher Ice Mode engaged is prohibited.

Takeoff with flaps FULL is prohibited.

2.6.11.2 LANDING GEAR

Extending or retracting the landing gear at bank angles in excess of 45 degrees is prohibited.

The landing gear may not fully retract into the uplocks with a load factor in excess of 1.4.

2.6.11.3 TURBULATORS, STALL STRIPS, AND VORTEX GENERATORS

Flight is prohibited with any turbulators, stall strips, or vortex generators missing or damaged.

2.6.12 IN-FLIGHT CIRCUIT BREAKER USE

Do not reset a tripped circuit breaker in flight unless it is essential for continued safe flight and landing. Circuit breakers must not be reset more than once.

2.6.13 STALL PREVENTION SYSTEM PREFLIGHT TEST

A satisfactory preflight test of the Stall Prevention System (SPS) must be performed prior to each flight.

2.6.14 OXYGEN

A minimum dispatch oxygen quantity of 1500 psi at 21ºC (70ºF) is required for pressurized flight above FL250.

NOTE

Minimum dispatch is temperature dependent.

Oxygen Fill Pressure Versus Temperature			
Temperature (ºC)	Temperature (ºF)	Fill Quantity (psi)	Minimum Dispatch (psi)
-40	-40	1466	1188
-34	-30	1501	1217
-29	-20	1536	1245
-23	-10	1571	1273
-18	0	1606	1302
-12	10	1640	1330
-7	20	1675	1358
-1	30	1710	1387
4	40	1745	1415
10	50	1780	1443
16	60	1815	1472
21	70	1850	1500
27	80	1885	1528
32	90	1920	1557
38	100	1955	1585
43	110	1990	1613
49	120	2025	1642
54	130	2060	1670

2.7 MISCELLANEOUS LIMITATIONS

2.7.1 MINIMUM CREW

One pilot in the left seat.

2.7.2 MAXIMUM OCCUPANCY

Maximum occupancy of the airplane is 6 persons.

2.7.3 DOOR

Flight with the door open, ajar, or improperly closed is prohibited.

2.7.4 EMERGENCY EXIT

Flight with the emergency exit locking pin engaged is prohibited.

2.7.5 SMOKING

Smoking is prohibited in this airplane at any time.

2.7.6 OAT INDICATIONS

Use only the OAT from ADC1 or from a reliable ground station for temperature reference during ground operations.

2.7.7 HEADSET

Required flight crewmembers must wear and use a headset at all times.

2.7.8 SEATS

The lap belt of the crew seat restraining harness must be low and tight to the crew seat occupant's pelvis during Taxi, Takeoff, and Landing.

When the RH rearward facing seat is occupied, the RH crew seat (copilot) must be in the full forward position if that seat is unoccupied.

The backrest of all seats must be in the full upright position for Taxi, Takeoff, and Landing.

Occupants in the rearward facing seats must adjust the headrest to fully support the head during Taxi, Takeoff, and Landing.

2.7.9 GLARE SHIELD

Glare Shield must be stowed for Taxi, Takeoff, and Landing.

2.8 MARKINGS

2.8.1 INDICATED AIRSPEED

MARKING	VALUE (KIAS/Mach)	REMARKS
Red band	Below 68 KIAS	
White band	68 –130 KIAS	Full Flap Operating Range. Lower limit is the maximum weight stall speed at most forward CG in the landing configuration (V_{S0}). Upper limit is the maximum speed permissible with full flaps (V_{FE_FULL}).
Green band	88 – 270 KIAS	Normal Operating Range. Lower limit is the maximum weight stall speed at most forward CG with flaps retracted (V_{S1}). Upper limit is the maximum operating speed or Mach number.
Red and white band	271 KIAS / 0.6 Mach and above	Maximum Operating Speed (V_{MO}) and Maximum Operating Mach Number (M_{MO}). Maximum speed for all operations.

2.8.2 ENGINE INSTRUMENTS AND SYSTEM INDICATIONS

INSTRUMENT	GREEN Normal Range	YELLOW Caution Range	RED Warning Range
Oil Temperature (°C)	11 – 105	-39 – 10 106 – 110	-65 – -40 111 – 120
Oil Pressure (psi)	90 – 135	60 – 89	0 – 59 136 – 200
Gas Generator Speed (N_G) (%)	51.0 – 104.0	N/A	Greater than 104.0
Propeller Speed (N_P) (RPM)	0 – 400 901 – 1720	401 – 900 1721 – 1730	1731 –1900
Inter-turbine Temperature (ITT) (°C)	200 – 840	841 – 850	Red Radial 850 Red Triangle 1000
Torque (TRQ) (%)	0.0 – 98.0	98.1 – 100.0	Greater than 100.0
Fuel Quantity (gal)	16 – 132	0.1 – 15.9	Red Radial 0
Fuel Pressure (psi)	5 – 49	Less than 5	Greater than 49
Fuel Flow (gph)	0.0 – 140.0	N/A	N/A
Nitrogen Pressure (psi)	1710 – 2500	1510 – 1700	0 – 1500 2510 – 3000
Cabin Altitude (ft)	-2000 – 10000	N/A	10100 – 35000
Differential Pressure (psid)	0 – 6.6	6.7 – 6.8	6.9 or greater
Oxygen Pressure (psi)	600 – 2000	0 – 599	N/A
Generator Amps (A)	0 – 300	N/A	N/A
Alternator Amps (A)	0 – 41	N/A	N/A
Batt 1 Voltage (V)	27 – 29.5	24 – 26.9	0 – 23.9 Greater than 29.5
Batt 2 Voltage (V)	27 – 29.5	24 – 26.9	0 – 23.9 Greater than 29.5

2.9 PLACARDS

Federal Aviation Regulations mandate that placards containing important information about the airplane be prominently displayed on the exterior and interior of the airplane. The placards must be located near the items they describe. Refer to the following information of the placard locations and their appearance on the exterior and interior of the airplane.

Placards outside of the cockpit must be in Portuguese. Placards located inside of the cockpit are in English. Placards shown in this manual in English and Portuguese are for translation purposes only.

2.9.1 EXTERIOR PLACARDS

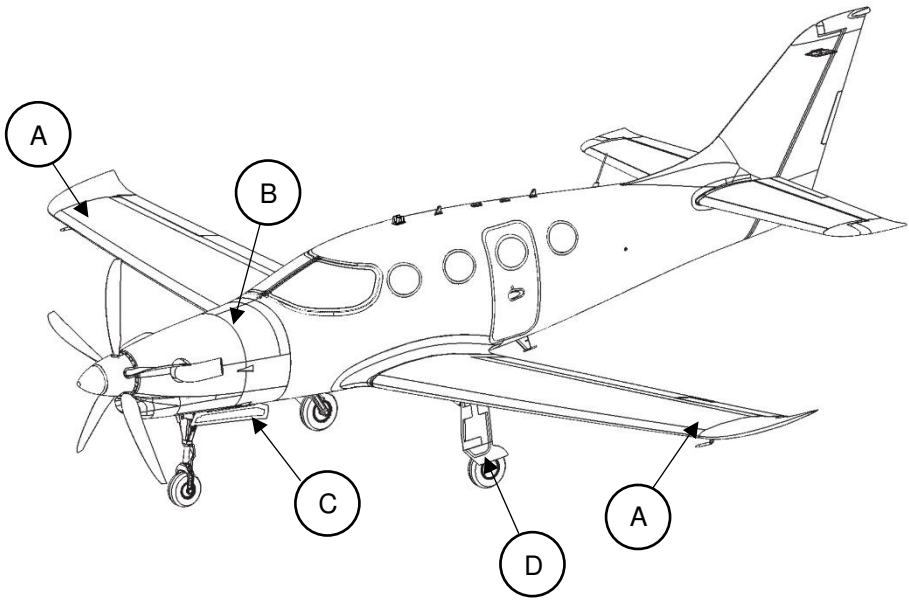





PORTUGUESE

SOMENTE COMBUSTÍVEL JET A
CONSULTE O MANUAL DE VOO DA AERONAVE
PARA OBTER MAIS INFORMAÇÕES
CLASSES DE COMBUSTÍVEIS PERMITIDOS

ENGLISH

JET FUEL ONLY
SEE AIRPLANE FLIGHT MANUAL FOR
PERMISSIBLE FUEL GRADES

Detail A





PORTUGUESE

ÓLEO
Capacidade 12QT./11.36 litros
VER MANUAL DE VOO PARA MAIS ÓLEOS
PERMITIDOS

ENGLISH

OIL
12qt./11.36ltr. Capacity
SEE AIRCRAFT FLIGHT MANUAL FOR
PERMISSIBLE OIL GRADES

Detail B

BEQUILHA 65-70 PSI
NOSE 65-70 PSI

NOSE 65-70 PSI

PORTUGUESE
NARIZ 65-70 PSI

ENGLISH
NOSE 65-70 PSI

On Each Nose Gear Door

Detail (C)

PRINCIPAL 103-108 PSI
MAIN 103-108 PSI

MAIN 103-108 PSI

PORTUGUESE

PRINCIPAL 103-108 PSI

ENGLISH

MAIN 103-108 PSI

On Each Main Gear Door

Detail (D)

2.9.2 INTERIOR PLACARDS

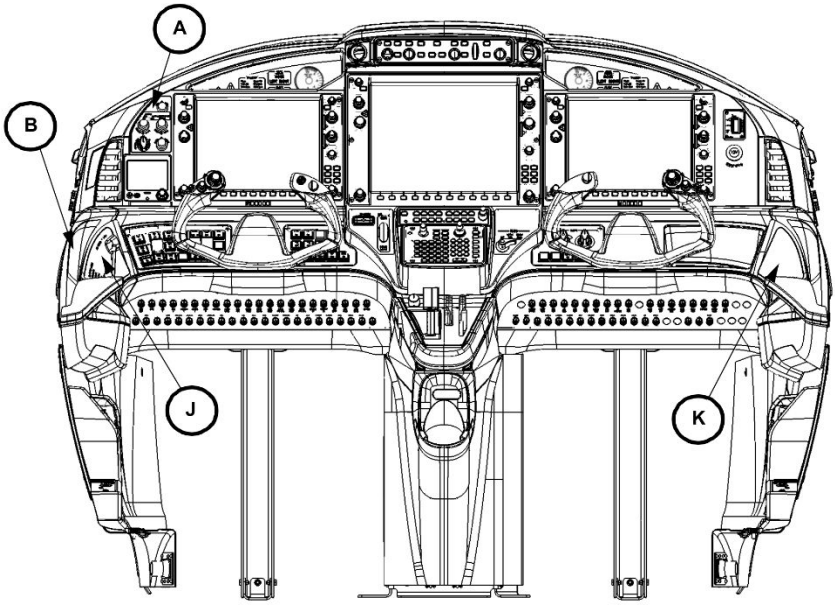

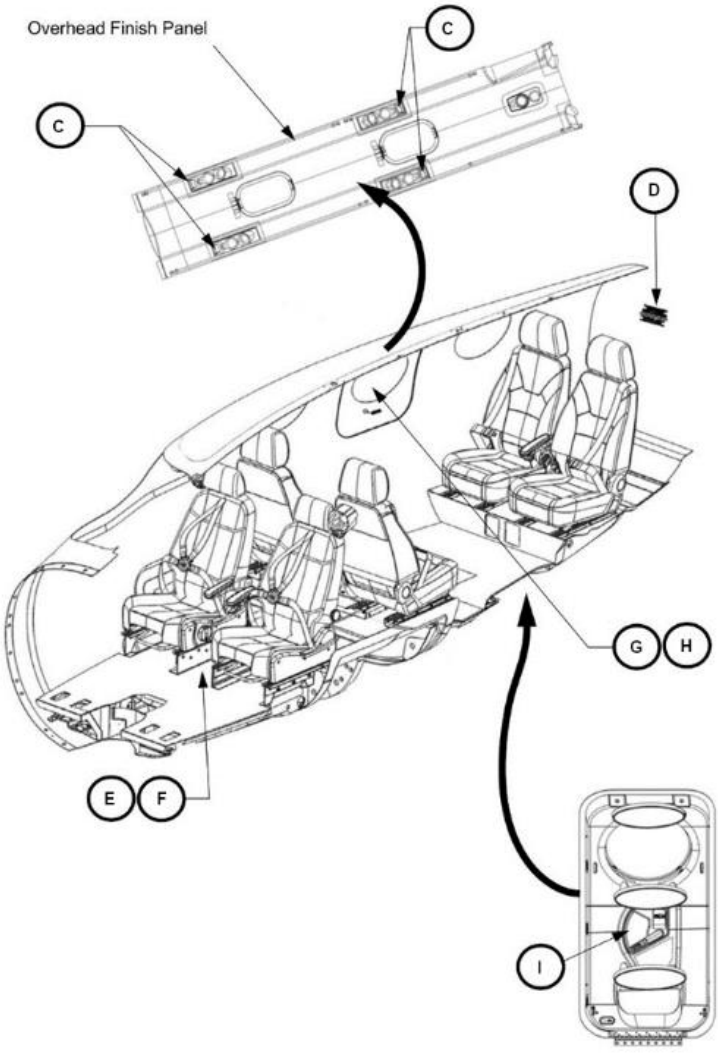



PORTUGUESE

MANOBRAS DE PARAFUSO PROIBIDAS

MANOBRAS ACROBÁTICAS PROIBIDAS

Vo 170 KIAS

Vmo/Mmo 270 KIAS/0.6M

Vlo 150 KIAS

ENGLISH

SPINS PROHIBITED

NO ACROBATIC MANUEVERS

Vo 170 KIAS

Vmo/Mmo 270 KIAS/0.6M

Vlo 150 KIAS

Detail (A)

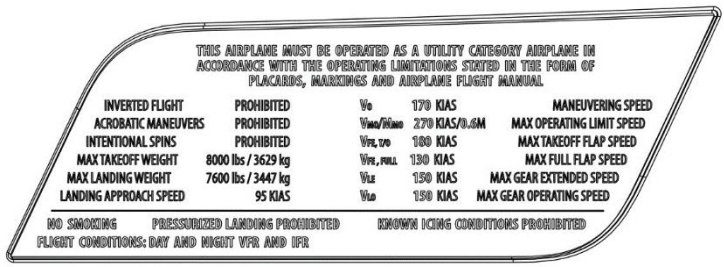

PORTUGUESE

ESSA AERONAVE DEVE SER OPERADA COMO AERONAVE DE CATEGORIA UTILITARIA DE ACORDO COM OS LIMITES OPERACIONAIS DESCRITOS NAS PLAQUETAS, MARCAÇÕES E MANUAL DE VOO

VOO INVERTIDO PROIBIDO

MANOBRAS ACROBATICAS PROIBIDAS

MANOBRAS DE PARAFUSO INTENCIONAIS PROIBIDAS

PESO MÁXIMO DE DECOLAGEM 8000 lbs/3629 kg

PESO MÁXIMO DE POUSO 7600 lbs/3629kg

VELOCIDADE DE APROXIMAÇÃO PARA POUSO 95 KIAS

Vo 170 KIAS VELOCIDADE DE MANOBRA

Vmo/Mmo 270 KIAS/0.6 VELOCIDADE MÁXIMA

Vfe T/O 180 KIAS VELOCIDADE MÁXIMA DE DECOLAGEM COM FLAP

Vfe FULL 130 KIAS VELOCIDADE MÁXIMA COM
FULL FLAP

Vle 150 KIAS VELOCIDADE MÁXIMO COM O TREM
DE POUSO EXTENDIDO

Vlo 150 KIAS VELOCIDADE MÁXIMA DE ACIONAMENTO DO TREM DE POUSO

PROIBIDO FUMAR

PROIBIDO POUSO COM AERONAVE PRESSURIZADO

PROIBIDO VOO EM CONDIÇÕES DE FORMAÇÃO DE GELO
CONDIÇÕES DE VOO: DIURNO/NOTURNO E VFR/IFR

ENGLISH

THIS AIRPLANE MUST BE OPERATED AS A UTILITY CATEGORY AIRPLANE IN ACCORDANCE WITH THE OPERATING LIMITATIONS STATED IN THE FORM OF
PLACARDS, MARKINGS AND AIRPLANE FLIGHT MANUAL

INVERTED FLIGHT PROHIBITED

ACROBATIC MANEUVERS PROHIBITED

INTENTIONAL SPINS PROHIBITED

MAX TAKEOFF WEIGHT 8000 lbs/3629 kg

MAX LANDING WEIGHT 7600 lbs/3629kg

LANDING APPROACH SPEED-95 KIAS

Vo 170 KIAS MANEUVERING SPEED

Vmo/Mmo 270 KIAS/0.6M MAX OPERATING LIMIT SPEED

Vfe T/O 180 KIAS MAX TAKEOFF FLAP SPEED

Vfe FULL 130 KIAS MAX FULL FLAP SPEED

Vle 150 KIAS MAX GEAR EXTENDED SPEED

Vlo150 KIAS MAX GEAR OPERATING SPEED

NO SMOKING

PRESSUREIZED LANDING PROHIBITED-

KNOWN ICING CONDITIONS PROHIBITED

FLIGHT CONDITIONS: DAY AND

Detail (B)



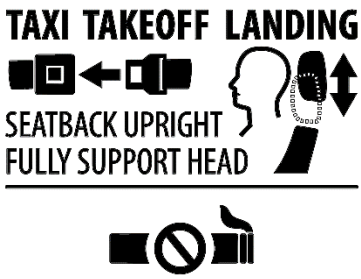

PORTUGUESE

TAXI DECOLAGEM POUSO
ASSENTO VERTICAL
CABEÇA APOIADA

ENGLISH

TAXI TAKEOFF
LANDING
SEATBACK
UPRIGHT
FULLY SUPPORT HEAD

Detail C

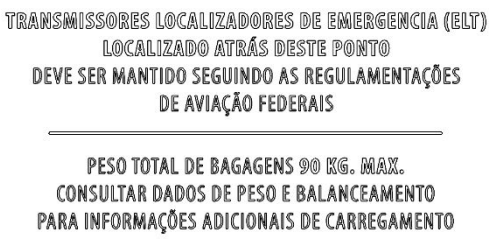

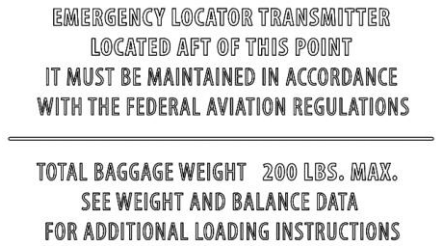

PORTUGUESE

TRANSMISSORES LOCALIZADORES DE EMERGENCIA (ELT)
LOCALIZADO ATRÁS DESTE PONTO
DEVE SER MANTIDO SEGUINDO AS REGULAMENTAÇÕES DE AVIAÇÃO FEDERAIS

PESO TOTAL DE BAGAGENS
200 LBS/90.7 KGS. MAX.

CONSULTAR DADOS DE PESO E BALANCEAMENTO
PARA INFORMAÇÕES ADICIONAIS DE CARREGAMENTO

ENGLISH

EMERGENCY LOCATOR TRANSMITTER
LOCATED AFT OF THIS POINT
IT MUST BE MAINTAINED IN ACCORDANCE WITH THE FEDERAL AVIATION REGULATIONS

TOTAL BAGGAGE WEIGHT
200 LBS./90.7 KGS. MAX.

SEE WEIGHT AND BALANCE DATA
FOR ADDITIONAL LOADING INSTRUCTIONS

Detail D



PORTUGUESE

EXTENSÃO EMERGENCIA DO TREM DE POUSO
MANTENHA O SE AFASTADO

ENGLISH

EMERGENCY GEAR EXTENSION
KEEP CLEAR

Detail E



PORTUGUESE

EXTINTOR DE
INCÊNDIO
MANTENHA SE AFASTADO

ENGLISH

FIRE
EXTINGUISHER
KEEP CLEAR

Detail F





PORTUGUESE

SAÍDA DE EMERGÊNCIA
PUXAR MACANETA, PUXAR PORTA

ENGLISH

EMERGENCY
EXIT
PULL HANDLE, PULL DOOR

Detail G





PORTUGUESE	**ENGLISH**
PINO DE TRAVAMENTO	LOCKING PIN
REMOVER ANTES DE INICIAR VOO	REMOVE BEFORE FLIGHT

Detail (H)





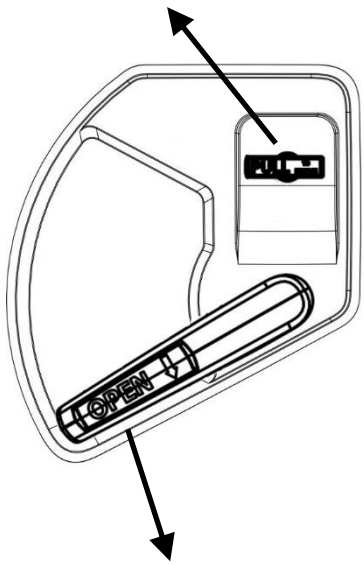





PORTUGUESE	**ENGLISH**
1. PUXE E SEGURE	1. PULL AND HOLD
2. ABRIR	2. OPEN

Detail (I)

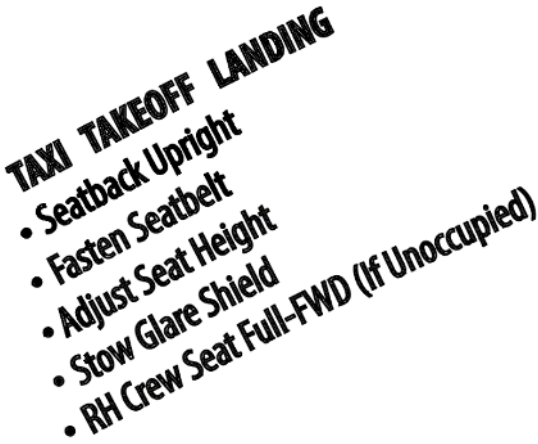

PORTUGUESE

TAXI DECOLAGEM POUSO
- Assento vertical
- Cinto de seguranca afivelado
- Ajustar altura banco
- Guardar quebra sol
- Banco do Co-Piloto todo a frente (se desocupado)

ENGLISH

TAXI TAKEOFF LANDING
- Seatback Upright
- Fasten Seatbelt
- Adjust Seat Height
- Stow Glare Shield
- RH Crew Seat Full-FWD (If Unoccupied)

Detail (J)



PORTUGUESE

TAXI DECOLAGEM POUSO
- Assento vertical
- Cinto de seguranca afivelado
- Ajustar altura banco

ENGLISH

TAXI TAKEOFF LANDING
- Seatback Upright
- Fasten Seatbelt
- Adjust Seat Height

Detail (K)

2.10 KINDS OF OPERATION

This airplane may be used for day, night, VFR, and IFR operations when the required equipment is installed and operating.

Required equipment specified under FAR part 23 for airworthiness under the “listed kind of operation” is tabulated in the following Kinds of Operation Equipment List. FAR part 91 specifies the minimum equipment necessary under the operating rules.

KINDS OF OPERATION EQUIPMENT LIST

Item	Kinds of Operation				Remarks
	VFR Day	VFR Night	IFR Day	IFR Night	
ATA 23 – Communications					
VHF COM			1	1	
ATA 24 – Electrical Power					
Starter Generator	1	1	1	1	
Standby Alternator			1	1	
Battery 1	1	1	1	1	
Battery 2	1	1	1	1	
Ammeter	1	1	1	1	Amp indication on the PFD and MFD.
ATA 25 – Equipment and Furnishing					
Emergency Locator Transmitter (ELT)	A/R	A/R	A/R	A/R	As required.
Crew and Passenger Restraint System	A/R	A/R	A/R	A/R	One seat harness per occupant.
ATA 26 – Fire Protection					
Cabin Fire Extinguisher	1	1	1	1	
ATA 27 – Flight Controls					
Control Yoke	1	1	1	1	
Flaps System	1	1	1	1	
Flaps Position Indicator	1	1	1	1	
Pitch Trim System	1	1	1	1	
Pitch Trim Indicator	1	1	1	1	
Yaw Trim Indication	1	1	1	1	

Item	Kinds of Operation				Remarks
	VFR Day	VFR Night	IFR Day	IFR Night	
Roll Trim Indicator	1	1	1	1	
Rudder Limiter Function	1	1	1	1	
Stall Prevention System (SPS)	1	1	1	1	
Flaps Hinge Covers	6	6	6	6	Flight with flap hinge covers missing or damaged is prohibited.
ATA 28 - Fuel					
Electric Fuel Pump, Left Wing	1	1	1	1	
Electric Fuel Pump, Right Wing	1	1	1	1	
Fuel Control Valve and Tank Selector	1	1	1	1	
Fuel Quantity Indicators	2	2	2	2	
ATA 30 – Ice and Rain Protection					
Pitot Probe Heater, Left Wing			1	1	
Pitot Probe Heater, Right Wing			1	1	
SPS Lift Transducer Heater, Left Wing			1	1	
SPS Lift Transducer Heater, Right Wing			1	1	
Wing and Stabilizer De-ice System	1	1	1	1	

Item	Kinds of Operation				Remarks
	VFR Day	VFR Night	IFR Day	IFR Night	
Engine Inlet Inertial Separator			1	1	
Windshield De-Ice Manifold and Cover	A/R	A/R	A/R	A/R	Must be installed but may be disabled
ATA 31 – Indicating and Recording Systems					
PFD	1	1	1	1	If MFD fails, engine indicators are shown on PFD in display Reversionary Mode
MFD	1	1	1	1	
ATA 32 - Landing Gear					
Landing Gear Position and Lock Indicators	3	3	3	3	On MFD
ATA 33 - Lights					
Anti-Collision/Position Light, Left Wing	1	1	1	1	
Anti-Collision/ Position Light, Right Wing	1	1	1	1	
Anti-Collision/Position Light, Tail	1	1	1	1	
Navigation Lights		3		3	
Landing Light (L/R Wing Tips)		1		1	For-hire operations
De-ice Inspection Light, RH Wing				1	

Item	Kinds of Operation				Remarks
	VFR Day	VFR Night	IFR Day	IFR Night	
ATA 34 – Navigation					
Garmin G1000 NXi Cockpit Reference Guide	1	1	1	1	
L3 Aviation Systems Genesis™ ES-500 Electronic Standby Instrument System Pilot's Guide	1	1	1	1	
Marker Beacon Receiver			A/R	A/R	As required per procedure
VHF Navigation Radio			A/R	A/R	As required per procedure
GNSS Receiver/ Navigator			A/R	A/R	As required per procedure
Altitude Encoder	A/R	A/R	1	1	As required per procedure
PFD Slip/Skid Indication			1	1	
PFD Heading Indication			1	1	
PFD Attitude Indication			1	1	
PFD Altitude Indication	1	1	1	1	
PFD Airspeed Indication	1	1	1	1	
NAV Radio			1	1	

Item	Kinds of Operation				Remarks
	VFR Day	VFR Night	IFR Day	IFR Night	
ATA 34 – Navigation (Cont.)					
Magne-tometer			1	1	
Gyroscopic Directional Indication (HSI)			1	1	
Clock			1	1	
Attitude Indicator			2	2	
Static System	1	1	1	1	
Pitot Probe	1	1	2	2	
ATA 77 – Engine Indicating					
ITT Indication	1	1	1	1	
Fuel Flow Indication	1	1	1	1	
Oil Pressure Indication	1	1	1	1	
Oil Temperature Indication	1	1	1	1	
Propeller Speed, Np	1	1	1	1	
Engine Speed, Ng	1	1	1	1	

SECTION 3

EMERGENCY PROCEDURES

TABLE OF CONTENTS

3.1 AIRSPEEDS FOR EMERGENCY OPERATION 3
3.2 GENERAL 3
3.2.1 CREW ALERTING SYSTEM 4
3.2.2 CIRCUIT BREAKERS 4
3.3 REJECTED TAKEOFF 5
3.4 ENGINE 5
3.4.1 DISCONTINUE ENGINE START 5
3.4.2 ENGINE FAILURE AFTER TAKEOFF – LOW ALTITUDE 6
3.4.3 ENGINE FAILURE IN FLIGHT 7
3.4.4 PARTIAL OR ERRATIC POWER LOSS 8
3.5 EMERGENCY DESCENT 9
3.5.1 EMERGENCY DESCENT PROFILES 9
3.5.2 MAXIMUM RATE EMERGENCY DESCENT 10
3.5.3 MAXIMUM RANGE EMERGENCY DESCENT 10
3.6 AIR START 11
3.6.1 AIR START ENVELOPE 11
3.6.2 AIR START 11
3.7 FIRE, SMOKE, OR FUMES 13
3.7.1 ENGINE OR COCKPIT/CABIN FIRE DURING START OR ON THE GROUND 13
3.7.2 ENGINE FIRE IN FLIGHT 13
3.7.3 COCKPIT/CABIN ELECTRICAL FIRE IN FLIGHT 14
3.7.4 COCKPIT/CABIN NON-ELECTRICAL FIRE IN FLIGHT 15
3.7.5 COCKPIT/CABIN SMOKE EVACUATION 15
3.8 EMERGENCY LANDINGS 16
3.8.1 FORCED LANDING 16
3.8.2 LANDING WITH GEAR UP 16
3.8.3 LANDING WITHOUT ELEVATOR CONTROL 17
3.8.4 DITCHING 17
3.9 STALL PREVENTION SYSTEM 18
3.9.1 INADVERTENT PUSHER/SHAKER OPERATION 18
3.9.2 PUSHER SERVO BINDING 18
3.10 AUTOPILOT AND ELECTRIC TRIM 18
3.10.1 AUTOPILOT MALFUNCTION 19
3.10.2 YAW DAMPER MALFUNCTION 19
3.10.3 TRIM MALFUNCTION 20
3.11 ELECTRICAL 21
3.11.1 TOTAL LOSS OF ELECTRICAL POWER 21

3.12 AVIONICS 22
3.12.1 PFD/MFD FAILURE 22
3.12.2 AIR DATA AND ATTITUDE HEADING REFERENCE SYSTEM (ADAHRS) FAILURE 23
3.12.3 AIRSPEED INDICATING SYSTEM FAILURE 24
3.12.4 ALTITUDE INDICATING SYSTEM FAILURE 24
3.12.5 AUTOPILOT UNABLE TO MAINTAIN ASSIGNED FLIGHT LEVEL ±65 FEET DURING RVSM OPERATIONS 25
3.13 MISCELLANEOUS 25
3.13.1 OXYGEN USE — FRONT SEATS 25
3.13.2 CRACKED OR DELAMINATED WINDSHIELD OR WINDOW IN FLIGHT 25
3.14 WARNING (RED) CAS MESSAGES — IN FLIGHT 26
3.14.1 AUTO DESCENT 26
3.14.2 CABIN ALT HIGH 28
3.14.3 CHECK GEAR 28
3.14.4 DE-ICE FAIL 28
3.14.5 DOOR UNLOCKED 29
3.14.6 ENGINE CHIP 29
3.14.7 GEN FAIL 30
3.14.8 ITT HIGH 31
3.14.9 NG HIGH 32
3.14.10 NP HIGH 33
3.14.11 OIL PRESS LOW 33
3.14.12 OIL TEMP HIGH 34
3.14.13 OVERSPEED 34
3.14.14 RUD LIM FAIL 35
3.14.15 STICK PUSH 35
3.14.16 STICK SHAKER 36
3.14.17 TORQUE HIGH 36
3.14.18 UNDERSPEED PROTECTION ACTIVE 37
3.14.19 WSH HEAT ON 38
3.15 WARNING (RED) CAS MESSAGES — ON GROUND 39
3.15.1 CHECK GEAR — ON GROUND 39
3.15.2 DOOR UNLOCKED — ON GROUND 39
3.15.3 ENGINE CHIP — ON GROUND 39
3.15.4 ITT HIGH — ON GROUND 40
3.15.5 OIL TEMP HIGH — ON GROUND 40

3.1 AIRSPEEDS FOR EMERGENCY OPERATION

Operating Maneuvering Speed (V_O):
All weights..... 170 KIAS

Best Glide (Propeller Feathered):
All weights ..... 129 KIAS

Landing without Engine Power:
Flaps UP ..... 110 KIAS
Flaps T/O ..... 105 KIAS
Flaps FULL ..... 95 KIAS

Landing in Pusher Ice Mode
Flaps UP ..... 130 KIAS
Flaps T/O ..... 125 KIAS
Flaps FULL ..... 110 KIAS

3.2 GENERAL

This section contains recommended procedures for different failures or emergency situations. Refer to Section 9 “Supplements” for additional emergency procedures associated with optional or particular equipment.

Many emergency procedures require immediate action by the pilot, leaving little time to consult the emergency procedures. Prior knowledge of these procedures and a thorough understanding of the airplane systems are prerequisites for safe airplane handling.

Memory Items are in bold text and outlined in a box and must be committed to memory so they may be executed without delay in response to an emergency.

The emergency procedures use the terms “Land as soon as possible” and “Land as soon as practical.” For the purposes of these procedures, these terms are defined as follows:

- Land as soon as possible – Land without delay at the nearest suitable airport where a safe approach and landing is reasonably assured.
- Land as soon as practical – Landing airport and duration of flight are at the discretion of the pilot. Extended flight beyond the nearest suitable airport where a safe approach and landing is reasonably assured is not recommended.

Emergency procedures alone cannot protect against all situations. Good airmanship must be used in conjunction with the emergency procedures to manage the emergency.

3.2.1 CREW ALERTING SYSTEM

The Crew Alerting System (CAS) provides:

RED Warning messages, which require immediate pilot awareness and immediate corrective action by the pilot.

AMBER Caution messages, which require immediate pilot awareness and subsequent pilot action.

WHITE Advisory messages, which increase pilot awareness.



Whenever a red or amber message illuminates, an additional WARNING or CAUTION indication will also illuminate in the pilot and copilot Wedge displays.

More information on the display of CAS messages can be found in Section 7 DESCRIPTION and the Garmin G1000 NXi Pilot's Guide.

3.2.2 CIRCUIT BREAKERS

Unless otherwise specified in a procedure, circuit breakers which trip in flight should not be reset. If the pilot in command determines that the system or equipment is required for safe completion of that flight, one attempt only is allowed to reset circuit breakers on the Essential Bus. Refer to Section 7.9.2.2 CIRCUIT BREAKERS.

An open Essential Bus circuit breaker may be reset only after at least one minute has elapsed since the circuit breaker tripped and if there is no smoke or burning smell.

If an emergency procedure requires a circuit breaker to be reset, this means to open (pull out) the circuit breaker, wait for approximately two (2) seconds, and then close (push in) the circuit breaker. If a circuit breaker is found already open, reset means to close (push in) the circuit breaker.

Circuit breaker locations are described as follows:

- Left (Pilot) or Right (Copilot) side (**L** or **R**)
- Top or Bottom row (**T** or **B**)
- Number of breakers in from Left or Right (#► or ◄#)

Left-Side (Pilot) Circuit Breakers

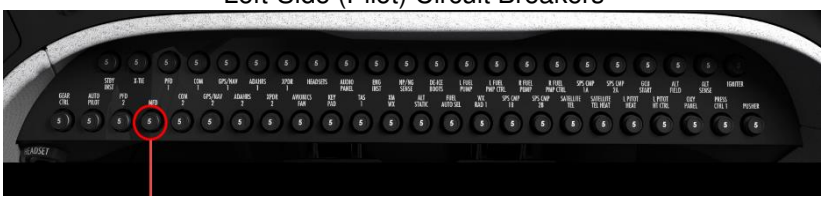

L-B-4►

CAUTION

ALWAYS VISUALLY VERIFY THE CIRCUIT BREAKER LABEL BEFORE MAKING ANY CHANGES TO A CIRCUIT BREAKER.

3.3 REJECTED TAKEOFF

1. POWER Lever	**IDLE, REVERSE AS REQUIRED**
2. Brakes	**AS REQUIRED**

3. *If the airplane cannot be stopped on the remaining runway or otherwise necessary:*
   a. PROP Lever ..... FEATHER
   b. COND Lever ..... FUEL CUTOFF
   c. FUEL TANK SELECTOR Knob ..... OFF
   d. BATT 1 & BATT 2 Switches ..... OFF
   e. Airplane ..... EVACUATE AS REQUIRED

3.4 ENGINE

3.4.1 DISCONTINUE ENGINE START

1. COND Lever	**FUEL CUTOFF**
2. IGNITER Switch	**AUTO**
3. ITT	**BELOW 750°C**
4. STARTER GEN Switch	**OFF**

5. Wait at least 60 seconds before dry motoring (see 3A.2) to allow for fuel draining to avoid engine damage.

3.4.2 ENGINE FAILURE AFTER TAKEOFF – LOW ALTITUDE

1.	**Best Glide Airspeed ..... 129 KIAS**
2.	**POWER Lever..... IDLE**
3.	**PROP Lever ..... FEATHER**
4.	**Flaps ..... AS REQUIRED**
5.	**Emergency Gear Extension System ..... AS REQUIRED**
6.	**Land straight ahead.**

7. Landing Airspeed.....Flaps UP: 110 KIAS
   Flaps T/O: 105 KIAS
   Flaps FULL: 95 KIAS

8. *If time permits:*
   a. COND Lever ..... FUEL CUTOFF
   b. FUEL TANK SELECTOR Knob..... OFF
   c. DUMP VALVE Switch ..... ON
   d. BATT 1 & BATT 2 Switches ..... OFF

After airplane has stopped:

9. Airplane.....EVACUATE AS REQUIRED

Amplification

Feather propeller to extend glide range. Propeller may feather on its own due to loss of oil pressure.

Glide range to landing site permitting, flaps should be deployed incrementally to FULL before touchdown to minimize airspeed on landing. Flap extension from UP to FULL takes approximately 12 seconds.

If landing site is suitable, land with gear DOWN. If landing site is not suitable for gear down landing, land with gear UP. Emergency gear extension takes approximately five seconds.

3.4.3 ENGINE FAILURE IN FLIGHT

1. POWER Lever ..... IDLE
2. PROP Lever .....FEATHER
3. Turn towards nearest landing area.
4. Crew Oxygen Masks (above 14,000 ft).....DON
5. MASK MICS Switch .....AS REQUIRED
6. Flaps.....UP
7. Best Glide Airspeed ..... 129 KIAS
8. All Occupants..... SEATED WITH SEATBELTS SECURE

9. *If in range of landing site:*
   a. Expedite descent to FL230.

10. *If cabin altitude exceeds 14,000 ft and passenger masks do not automatically deploy:*
    a. EMERG OXYGEN Switch ..... ON

❖ *IF TIME PERMITS*

11. *Perform* AIR START (3.6.2).

❖ *IF TIME DOES NOT PERMIT*

11. Perform FORCED LANDING (3.8.1).

Amplification

A total loss of combustion is indicated by a loss of fuel flow, low ITT, and/or N_G below 40%. If fuel flow positive, ITT above 400°C, and N_G above 40%, perform PARTIAL OR ERRATIC POWER LOSS (3.4.4).

If above FL230 and within gliding distance of landing area, consider expediting descent to FL230, below which an air start can be attempted.

3.4.4 PARTIAL OR ERRATIC POWER LOSS

1.	**IGNITER Switch.....ON**
2.	**POWER Lever.....IDLE**
3.	**MAN OVRD Lever ..... DEPLOY AND ENGAGE SLOWLY**

4. Land as soon as possible.

After touchdown:

5. MAN OVRD Lever .....FULL DOWN
6. Brakes..... AS REQUIRED

WARNING

DEPENDING ON AIRFIELD CONDITIONS, AND AIRPLANE WEIGHT AND CONFIGURATION, THE AVAILABLE POWER MAY NOT BE SUFFICIENT TO ENSURE A GO-AROUND.

WARNING

TOTAL LANDING DISTANCE WILL BE INCREASED WITHOUT THE USE OF GROUND-FINE.

CAUTION

WHEN MAN OVRD LEVER IS IN OPERATION, DO NOT PERMIT N_G TO FALL BELOW 75%, AVOID RAPID CONTROL MOVEMEMENTS, AND OBSERVE ENGINE LIMITATIONS.

Amplification

A partial loss of power or rollback is indicated by positive fuel flow, ITT above 400°C, and N_G remaining at or above 40%. If loss of fuel flow, low ITT, and/or N_G below 40%, perform ENGINE FAILURE IN FLIGHT (3.4.3).

Switch control of the engine from the POWER lever to the manual override (MOR) lever referencing this checklist.

3.5 EMERGENCY DESCENT

3.5.1 EMERGENCY DESCENT PROFILES

Conditions:

- Airplane Weight – 8,000 lb
- Landing gear up
- Propeller feathered

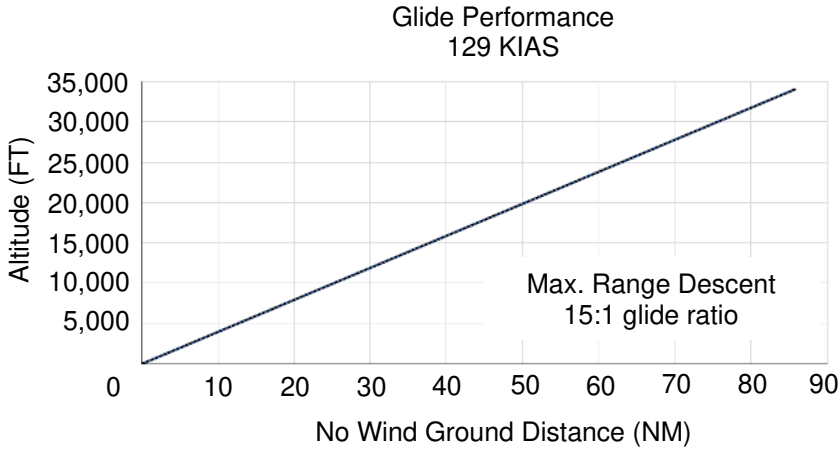

Two defined emergency descent procedures are:

1. Maximum Range—a descent that will cover the greatest distance over the ground.

2. Maximum Rate—a descent that will lose altitude in the shortest amount of time.

The choice of the type of descent to perform will depend on the kind of failure and the current situation. Other factors to consider when selecting which descent to use are:

- Cabin altitude and oxygen duration
- Electrical power endurance
- Distance to a suitable landing area
- Flight conditions (IMC, VMC, ICING, etc.)
- Minimum safe altitude
- Fuel reserves.

The pilot must consider the entire situation and adjust his or her priorities accordingly.

3.5.2 MAXIMUM RATE EMERGENCY DESCENT

1.	**Autopilot**	**DISENGAGE**
2.	**POWER Lever**	**IDLE**
3.	**PROP Lever**	**MAX RPM**
4.	**Pitch**	**10° TO 20° NOSE DOWN**
5.	**Airspeed**	**M_{MO}/V_{MO}**

CAUTION

IF SIGNIFICANT TURBULENCE IS EXPECTED, OR IF SUSPECTED STRUCTURAL PROBLEM, DO NOT DESCEND AT INDICATED AIRSPEEDS GREATER THAN V_O.

Amplification

The pilot may roll into a 45-degree bank while pitching down to establish the descent more quickly. Once the airspeed is established in the descent, roll wings level.

When levelling off after the descent, initiate level-off approximately 1000 above target altitude and pitch up slowly so as not to exceed airplane load limits.

3.5.3 MAXIMUM RANGE EMERGENCY DESCENT

1.	POWER Lever	IDLE
2.	PROP Lever	FEATHER
3.	Flaps	UP
4.	Landing Gear	UP
5.	Best Glide Airspeed	129 KIAS

3.6 AIR START

3.6.1 AIR START ENVELOPE

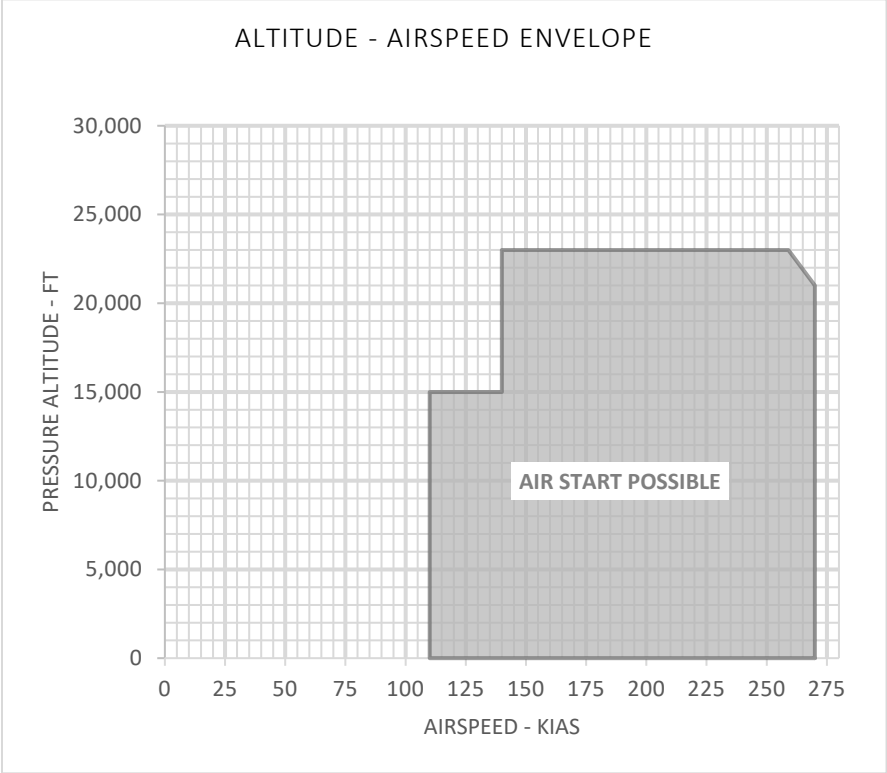

3.6.2 AIR START

1. Verify within Air Start Envelope.
2. AIR COND Switch ..... OFF
3. PROP HEAT Switch ..... OFF
4. PITOT STALL HT Switch.....OFF UNLESS REQUIRED
5. COND Lever .....FUEL CUTOFF
6. PROP Lever.....FEATHER
7. FUEL TANK SELECTOR Knob ..... FULLEST TANK
8. PRESS AIR Switch..... OFF
9. FUEL AUTO SEL Switch ..... OFF
10. BATT 1 & BATT 2 Switches ..... ON
11. L & R FUEL PUMP Switches..... ON
12. IGNITER Switch ..... ON
13. STARTER GEN Switch ..... ON
14. START Switch ..... PRESS & RELEASE
    a. Oil Pressure ..... RISING
    b. NG..... 12% MINIMUM
15. COND Lever ..... LOW
16. ITT and N_G.....MONITOR

— PROCEDURE CONTINUES ON NEXT PAGE —

❖ *IF AIR START FAILS*

17. COND Lever ..... FUEL CUTOFF
18. STARTER GEN Switch ..... OFF
19. Best Glide Airspeed ..... 129 KIAS
20. Proceed to nearest landing area.
21. Perform FORCED LANDING (3.8.1).

❖ *IF ENGINE RELIGHTS AND AFTER N_G GREATER THAN 51%*

22. Starter/Generator Sequence ..... COMPLETE
23. Engine Instruments ..... CHECK
24. COND Lever ..... HIGH
25. PROP Lever ..... MAX RPM
26. POWER Lever ..... AS REQUIRED
27. IGNITER Switch ..... AUTO
28. PRESS AIR Switch ..... ON
29. PITOT STALL HT Switch ..... ON
30. PROP HEAT Switch ..... AS REQUIRED
31. Climate Controls ..... AS REQUIRED
32. Cabin Altitude ..... MONITOR
33. Land as soon as practical.

WARNING

DO NOT ATTEMPT MORE THAN ONE AIR START. REPEATED ATTEMPTS COULD DISCHARGE THE BATTERIES TO LEVELS THAT WOULD NOT SUPPORT ESSENTIAL ELECTRICAL SERVICES.

CAUTION

AFTER AN AIR START, THE AUTOMATIC FUEL SELECTOR HAS BEEN DISABLED, AND THE FUEL SELECTOR MUST BE MANAGED MANUALLY.

3.7 FIRE, SMOKE, OR FUMES

3.7.1 ENGINE OR COCKPIT/CABIN FIRE DURING START OR ON THE GROUND

1. Airplane ..... STOP
2. COND Lever ..... FUEL CUTOFF
3. FUEL TANK SELECTOR Knob ..... OFF
4. BATT 1 & BATT 2 Switches ..... OFF
5. Airplane ..... EVACUATE
6. Fire ..... EXTINGUISH

3.7.2 ENGINE FIRE IN FLIGHT

1. COND Lever ..... FUEL CUTOFF
2. PROP Lever ..... FEATHER
3. POWER Lever ..... IDLE
4. FUEL TANK SELECTOR Knob ..... OFF
5. Crew Oxygen Masks (above 14,000 ft) ..... DON
6. MASK MICS Switch ..... AS REQUIRED
7. Initiate MAXIMUM RATE EMERGENCY DESCENT (3.5.2)
8. PRESS AIR Switch ..... OFF
9. L & R FUEL PUMP Switches ..... OFF

10. *If fire is extinguished:*
    a. Best Glide Airspeed ..... 129 KIAS

WARNING

AFTER AN ENGINE FIRE IN FLIGHT, DO NOT ATTEMPT AN AIR START.

11. *If smoke evacuation is required:*
    a. Oxygen Mask Regulator ..... EMGCY
    b. EMERG OXYGEN Switch ..... ON
    c. DUMP VALVE Switch ..... ON
    d. DOOR SEAL Switch ..... OFF
    e. GROUND FRESH AIR Switch ..... ON

12. *If cabin altitude exceeds 14,000 ft and passenger masks do not automatically deploy:*
    a. EMERG OXYGEN Switch ..... ON

13. Perform FORCED LANDING (3.8.1)

3.7.3 COCKPIT/CABIN ELECTRICAL FIRE IN FLIGHT

1. Crew Oxygen Masks..... DON
2. Oxygen Mask Regulator..... EMGCY
3. MASK MICS Switch.....ON
4. EMERG OXYGEN Switch .....ON
5. DUMP VALVE Switch.....ON
6. STARTER GEN Switch .....OFF
7. BATT 1 & BATT 2 Switches .....OFF
8. Fly by reference to Standby Instrument.
9. Fire Extinguisher.....USE AS REQUIRED

❖ *IF FIRE NOT EXTINGUISHED*

10. Initiate MAXIMUM RATE EMERGENCY DESCENT (3.5.2).
11. Perform FORCED LANDING (3.8.1).

❖ *IF FIRE IS EXTINGUISHED*

10. Initiate descent to 10,000 ft or minimum safe altitude (if higher).

11. *If smoke or fumes are present or essential electrical equipment is required:*
    a. X-TIE Circuit Breaker (**L-T-2►**) ..... PULL
    b. BATT 1 Switch .....ON

12. *If smoke and/or fumes are present:*
    a. HI PRESS AIR Switch.....ON
    b. DOOR SEAL Switch.....OFF

13. *If smokes/fumes return:*
    a. BATT 1 Switch .....OFF

14. Land as soon as possible.
    a. Landing Gear will not extend normally, plan for extending landing gear using Emergency Landing Gear Extension.
       i. Airspeed ..... BELOW 130 KIAS
       ii. Emergency Gear Extension Handle ..... ACTIVATE

    b. Flaps will not extend, plan on landing with flaps UP.
       i. Final approach airspeed.....115 KIAS

CAUTION

ALLOW FOR LANDING DISTANCE INCREASE OF
UP TO 65% MORE THAN FLAPS FULL.

3.7.4 COCKPIT/CABIN NON-ELECTRICAL FIRE IN FLIGHT

1. Crew Oxygen Masks ..... DON
2. Oxygen Mask Regulator ..... EMGCY
3. MASK MICS Switch ..... ON
4. EMERG OXYGEN Switch ..... ON (if oxygen available)
5. Fire Extinguisher ..... USE AS REQUIRED

❖ *IF FIRE NOT EXTINGUISHED:*

6. Initiate MAXIMUM RATE EMERGENCY DESCENT (3.5.2).
7. Perform FORCED LANDING (3.8.1).

❖ *IF FIRE IS EXTINGUISHED:*

6. Initiate descent to 10,000 ft or minimum safe altitude (if higher).

7. Climate Fan Control ..... OFF (counterclockwise)
8. DUMP VALVE Switch ..... ON
9. HI PRESS AIR Switch ..... ON
10. DOOR SEAL Switch ..... OFF

11. *If smoke/fumes are coming from pressurization air:*
    a. PRESS AIR Switch ..... OFF
    b. GROUND FRESH AIR Switch ..... ON

12. Land as soon as possible.

3.7.5 COCKPIT/CABIN SMOKE EVACUATION

1. Crew Oxygen Masks ..... DON
2. Oxygen Mask Regulator ..... EMGCY
3. MASK MICS Switch ..... ON
4. EMERG OXYGEN Switch ..... ON (if oxygen available)
5. DEFROST Switch ..... OFF
6. Climate Fan Control ..... OFF (counterclockwise)
7. DUMP VALVE Switch ..... ON
8. HI PRESS AIR Switch ..... ON
9. DOOR SEAL Switch ..... OFF

10. *If smoke/fumes are coming from pressurization air:*
    a. PRESS AIR Switch ..... OFF
    b. GROUND FRESH AIR Switch ..... ON

Amplification

Normally, HI PRESS AIR provides the maximum flow of pressurization air. However, with certain system malfunctions, EMERG PRESS may produce a higher rate of smoke evacuation.

CAUTION

USE OF DEFROST TOGETHER WITH EMERG PRESS IS PROHIBITED.

NOTE

Once cabin pressure has been dumped, the pressurization system may be unable to regain the pressurization schedule.

3.8 EMERGENCY LANDINGS

3.8.1 FORCED LANDING

1. Seat Backs.....UPRIGHT
2. Seat Belts .....SECURE
3. Passengers.....BRIEF
4. ELT .....ON

Before touchdown:

5. Flaps ..... AS REQUIRED
6. Emergency Gear Extension System..... AS REQUIRED
7. Landing Airspeed.....FLAPS UP: 110 KIAS
   FLAPS T/O: 105 KIAS
   FLAPS FULL: 95 KIAS
8. COND Lever ..... FUEL CUTOFF
9. FUEL TANK SELECTOR Knob .....OFF
10. DUMP VALVE Switch.....ON
11. BATT 1 & BATT 2 Switches .....OFF

After the airplane has stopped:

12. Airplane.....EVACUATE AS REQUIRED

Amplification

Glide range to landing site permitting, flaps should be deployed incrementally to FULL before touchdown to minimize airspeed on landing. Flap extension from UP to FULL takes approximately 12 seconds.

If landing site is suitable, land with gear DOWN. If landing site is not suitable for gear down landing, land with gear UP. Emergency gear extension takes approximately five seconds.

3.8.2 LANDING WITH GEAR UP

1. If able, have ground personnel visually verify gear position.
2. Passengers .....BRIEF
3. Flaps..... FULL
4. Final approach airspeed.....95 KIAS

When runway is assured:

5. POWER Lever ..... IDLE
6. PROP Lever..... FEATHER
7. COND Lever ..... FUEL CUTOFF
8. FUEL TANK SELECTOR Knob .....OFF
9. BATT 1 & BATT 2 Switches .....OFF

After the airplane has stopped:

10. Airplane.....EVACUATE AS REQUIRED

3.8.3 LANDING WITHOUT ELEVATOR CONTROL

1. Passengers ..... BRIEF
2. Landing Gear ..... DOWN
3. Flaps..... T/O
4. Airspeed ..... 120 KIAS
5. Power ..... AS REQUIRED TO MAINTAIN SPEED AND 300 TO 500 FPM DESCENT
6. Elevator ..... ADJUST USING PITCH TRIM
7. Land in nose-high attitude.

NOTE

If able, burn fuel to reduce weight and select longest suitable runway.

3.8.4 DITCHING

1. Passengers ..... BRIEF
2. Landing Gear ..... UP
3. Flaps..... FULL
4. Final approach airspeed..... 95 KIAS
5. DUMP VALVE Switch ..... ON
6. PRESS AIR Switch ..... OFF
7. POWER Lever..... IDLE
8. PROP Lever ..... FEATHER
9. COND Lever..... FUEL CUTOFF
10. FUEL TANK SELECTOR Knob ..... OFF
11. BATT 1 & BATT 2 Switches ..... OFF
12. Ditch with low rate of descent.

CAUTION

IN HEAVY SWELL WITH LIGHT WIND, LAND PARALLEL TO THE SWELL.

CAUTION

IN HEAVY WIND, LAND INTO THE WIND, TOUCHING DOWN AT THE TOP OF OR ON THE BACKSIDE OF A SWELL, IF POSSIBLE.

After ditching:

13. Airplane ..... EVACUATE VIA EMERGENCY EXIT

3.9 STALL PREVENTION SYSTEM

3.9.1 INADVERTENT PUSHER/SHAKER OPERATION

Conditions:

- Improper pusher operation.
- Rapid nose-down pitch motion.

1. Control Yoke	**GRASP AND MAINTAIN CONTROL**
2. AP/TRIM DISC Switch	**PRESS & HOLD**
3. Pitch	**SMOOTHLY TO LEVEL FLIGHT**

4. PUSHER Circuit Breaker (**L-B-◄1**)..... PULL
5. AP/TRIM DISC Switch..... RELEASE
6. TRIM RESET Switch .....PRESS & RELEASE

WARNING

STALL PREVENTION IS NOT PROVIDED WITH THE STALL PREVENTION SYSTEM INOPERATIVE. DO NOT DECELERATE BELOW 100 KIAS FLAPS UP, 95 KIAS FLAPS T/O, 80 KIAS FLAPS FULL.

3.9.2 PUSHER SERVO BINDING

Conditions:

- Pusher servo clutch remains engaged, and
- Elevator movement restricted

1. Control Yoke	**GRASP AND MAINTAIN CONTROL**
2. AP/TRIM DISC Switch	**PRESS AND HOLD**

3. PUSHER Circuit Breaker (**L-B-◄1**)..... PULL
4. AP/TRIM DISC Switch..... RELEASE
5. TRIM RESET Switch .....PRESS AND RELEASE
6. Trim..... AS REQUIRED
7. Minimum Airspeed..... FLAPS UP: 100 KIAS
   FLAPS T/O: 95 KIAS
   FLAPS FULL: 80 KIAS

WARNING

STALL PREVENTION IS NOT PROVIDED WITH THE STALL PREVENTION SYSTEM INOPERATIVE. DO NOT DECELERATE BELOW 100 KIAS FLAPS UP, 95 KIAS FLAPS T/O, 80 KIAS FLAPS FULL.

3.10 AUTOPILOT AND ELECTRIC TRIM

3.10.1 AUTOPILOT MALFUNCTION

Conditions:

- Autopilot maneuvers the airplane in unexpected manner, or
- Autopilot fails to hold commanded flight path, or
- Inadvertent activation of Electronic Stability & Protection (ESP)

1. Control Yoke ..... GRASP AND MAINTAIN CONTROL
2. AP/TRIM DISC Switch ..... PRESS & HOLD

CAUTION

HOLD THE CONTROL YOKE FIRMLY. UP TO 50 POUNDS OF FORCE ON THE CONTROL YOKE MAY BE REQUIRED TO MAINTAIN LEVEL FLIGHT.

3. Airspeed ..... ADJUST TO RELIEVE FORCES
4. AUTOPILOT Circuit Breaker (L-B-2►) ..... PULL
5. AP/TRIM DISC Switch ..... RELEASE
6. TRIM RESET Switch ..... PRESS & RELEASE
7. Trim ..... ADJUST AS NECESSARY
8. Notify ATC of loss of RVSM capability.

NOTE

A complete failure of the autopilot will necessitate manual control of the airplane to maintain cruise flight level. If approved by ATC, flight in RVSM airspace may be continued after implementing this procedure.

3.10.2 YAW DAMPER MALFUNCTION

Conditions:

- Uncommanded rudder inputs, or
- Lack of yaw damping.

1. Yaw Damper ..... OFF

2. *If yaw damper is still controlling the airplane:*
   a. AUTOPILOT Circuit Breaker (**L-B-2►**) ..... PULL

3. Rudder Trim ..... ADJUST AS NECESSARY

NOTE

With the yaw damper disabled, changes in airspeed and power will require manual adjustment of rudder trim.

3.10.3 TRIM MALFUNCTION

Conditions:

- Trim runs without command in any axis, or
- Trim does not respond to trim input in any axis.

1. Control Yoke	**GRASP AND MAINTAIN CONTROL**
2. AP/TRIM DISC Switch	**PRESS AND HOLD**

CAUTION

HOLD THE CONTROL YOKE FIRMLY. SIGNIFICANT FORCE ON THE CONTROL YOKE MAY BE REQUIRED.

3. TRIM DISC Caution ..... DISPLAYED
4. AP/TRIM DISC Switch ..... RELEASE

5. *If elevator trim malfunction or still in motion:*
   a. ELEV TRIM Circuit Breaker (**R-T-3►**) ..... PULL

6. *If rudder trim malfunction or still in motion:*
   a. RUD TRIM Circuit Breaker (**R-T-5►**) ..... PULL

7. *If aileron trim malfunction or still in motion:*
   a. AIL TRIM Circuit Breaker (**R-T-4►**) ..... PULL

8. TRIM RESET Switch ..... PRESS AND RELEASE
9. Airspeed ..... ADJUST TO RELIEVE FORCES

3.11 ELECTRICAL

3.11.1 TOTAL LOSS OF ELECTRICAL POWER

1.	**Crew Oxygen Masks (above 14,000 ft)**	**DON**
2.	Standby Instrument	REFERENCE
3.	POWER Lever	SET BY REFERENCE TO ATTITUDE AND AIRSPEED

CAUTION

WHEN FULLY CHARGED, THE INTERNAL BATTERY IN THE STANDBY INSTRUMENT WILL PROVIDE POWER FOR AT LEAST 60 MINUTES IF AIRPLANE POWER IS LOST.

4. Land as soon as possible.
   a. Landing Gear will not extend normally, plan for extending landing gear using Emergency Landing Gear Extension.
      i. Airspeed ..... BELOW 130 KIAS
      ii. Emergency Gear Extension Handle ..... ACTIVATE

   b. Flaps will not extend or retract, plan on landing with flaps in current position.
      i. Final approach airspeed ..... FLAPS UP: 115 KIAS
      FLAPS T/O: 110 KIAS
      FLAPS FULL: 95 KIAS

CAUTION

ALLOW FOR LANDING DISTANCE INCREASE OF UP TO 65% MORE THAN FLAPS FULL.

Amplification

If VMC is encountered attempt a descent and landing under VMC and avoid IFR conditions.

3.12 AVIONICS

3.12.1 PFD/MFD FAILURE

3.12.1.1 LEFT PFD FAILURE

Conditions:

- Dark screen, or
- Lack of response to control input (buttons, knobs, softkeys).

1. Standby Instrument or Copilot's PFD.....REFERENCE
2. DISPLAY BACKUP Switch.....PRESS AS DESIRED
3. Land as soon as practical.

NOTE

The use of reversionary mode (display backup) displays the left PFD information on the MFD and disables access to supplementary information such as weather data, etc.

NOTE

Primary altimetry data for RVSM operations will be displayed on the MFD while in reversionary (display backup) mode after a left PFD (PFD1) failure.

3.12.1.2 RIGHT PFD FAILURE

Conditions:

- Dark screen, or
- Lack of response to control input (buttons, knobs, softkeys).

1. Standby Instrument or Pilot's PFD.....REFERENCE
2. DISPLAY BACKUP Switch.....PRESS AS DESIRED
3. Land as soon as practical.

NOTE

The use of reversionary mode (display backup) displays the right PFD information on the MFD and disables access to supplementary information such as weather data, etc.

NOTE

Independent altimetry data for RVSM operations will be displayed on the MFD while in reversionary (display backup) mode after a right PFD (PFD2) failure.

3.12.1.3 MFD FAILURE

Conditions:

- Dark screen, or
- Lack of response to control input (buttons, knobs, softkeys).

1. DISPLAY BACKUP Switch ..... PRESS
2. Land as soon as practical.

NOTE

The use of reversionary mode (display backup) displays EIS information on the PFDs. Other information and functions normally provided on the MFD will not be available.

3.12.2 AIR DATA AND ATTITUDE HEADING REFERENCE SYSTEM (ADAHRS) FAILURE

Conditions:

- Red Xs on over affected data on respective PFD.

1. PFD SENSOR Softkey ..... SELECT OTHER ADC or AHRS
2. Standby Instrument.....CROSS-CHECK AND MONITOR
3. Notify ATC of loss of RVSM capability.

NOTE

The airplane is no longer RVSM capable with a single ADC or AHRS.

Amplification

A complete failure of the Pilot's or Copilot's ADAHRS would result in the loss of the independent measuring system. A red X will cover the affected data on the respective PFD. a "BOTH ON ADC1/ADC2" caution will appear, and/or a "BOTH ON AHRS1/AHRS2" caution will appear. If approved by ATC, flight in RVSM airspace may be continued upon the Pilot's or Copilot's ADAHRS failure by implementing this procedure.

3.12.3 AIRSPEED INDICATING SYSTEM FAILURE

Conditions:

- Erroneous or erratic airspeed indication in flight due to partial or complete blockage or failure of the pitot system(s).

1. PITOT STALL HT Switch..... CHECK ON
2. Refer to working airspeed indicating system (other PFD and/or standby instrument).
3. PFD SENSOR Softkey .....SELECT OTHER ADC
4. Notify ATC of loss of RVSM capability.

5. *If all airspeed indicating systems have failed and symptoms persist:*
   a. Perform a precautionary landing, flying by reference to attitude, altitude, and power instruments.

Amplification

The left pitot system is connected to ADAHRS #1 (pilot's PFD) and Standby Instrument. Failure of the left pitot system will be observed on both the pilot's PFD and standby instrument.

The right pitot system is connected to ADAHRS #2 (copilot PFD). Failure of the right pitot system will be observed on the copilot's PFD only.

3.12.4 ALTITUDE INDICATING SYSTEM FAILURE

Conditions:

- Erroneous or erratic altitude and/or vertical speed indications in flight due to partial or complete blockage or failure of the static system(s).

1. Refer to working altitude indicating system (other PFD and/or standby instrument).
2. PFD SENSOR Softkey .....SELECT OTHER ADC
3. Notify ATC of loss of RVSM capability.

4. *If all altitude indicating systems have failed and symptoms persist:*
   a. Refer to GNSS altitude (MFD Map TAWS-B Page).
   b. Land as soon as practical.

Amplification

Static system 1 is connected to ADAHRS #1 (pilot's PFD) and the Standby Instrument. Failure of static system 1 will be observed on both the pilot's PFD and standby instrument.

Static system 2 system is connected to ADAHRS #2 (copilot's PFD). Failure of static system 2 will be observed on the copilot's PFD only.

NOTE

The airplane is no longer RVSM capable without both ADCs.

3.12.5 AUTOPILOT UNABLE TO MAINTAIN ASSIGNED FLIGHT LEVEL ±65 FEET DURING RVSM OPERATIONS

1. Disengage the autopilot.
2. Ascend/descend to assigned flight level.
3. Re-engage the autopilot.

4. *If autopilot is unable to maintain assigned flight level ±65 feet:*
   a. Evaluate the ability to maintain altitude through manual control.
   b. Notify ATC of the failure and await ATC instructions.

3.13 MISCELLANEOUS

3.13.1 OXYGEN USE — FRONT SEATS

WARNING

IF TIME PERMITS, BEFORE USING OXYGEN, REMOVE ANY POTENTIALLY FLAMMABLE SUBSTANCES FROM YOUR FACE (OILS, GREASE, SOAP, LIPSTICK, MAKEUP, ETC.).

1. Oxygen Mask ..... DON
   a. Grasp regulator by red tabs and pull mask out of the cup.
   b. While swinging the mask forward, inflate the harness by pressing and holding down the two red tabs.
   c. Put the mask on the head.
   d. Release the red tabs to secure the mask onto the face.
2. MASK MICS Switch ..... ON
3. Oxygen Flow ..... CHECK

❖ *IF SMOKE IN COCKPIT:*

4. Oxygen Mask Regulator..... EMGCY

❖ *IF NO SMOKE IN COCKPIT*

4. Oxygen Mask Regulator..... NORMAL (100% if required)

3.13.2 CRACKED OR DELAMINATED WINDSHIELD OR WINDOW IN FLIGHT

1. Crew Oxygen Masks (above 14,000 ft)..... DON

2. MASK MICS Switch ..... AS REQUIRED
3. All Occupants ..... SEATED WITH SEATBELTS SECURE
4. Airspeed ..... REDUCE TO MINIMUM PRACTICAL
5. Landing Field Elevation..... SET TO 10,000 ft

6. Descend to 10,000 ft or minimum safe altitude (if higher).
7. Land as soon as practical.

NOTE

Flight at lower altitudes significantly decreases fuel efficiency and range.

Amplification

Setting the landing field elevation and descending to 10,000 ft will reduce cabin differential pressure to reduce stress on the window.

3.14 WARNING (RED) CAS MESSAGES — IN FLIGHT

3.14.1 AUTO DESCENT

AUTO DESCENT

Conditions:

- Autopilot engaged,
- Cabin altitude above 15,000’,
- Pressure altitude above 14,900’,
- CABIN ALT HIGH Warning active, and
- CABIN DUMP Switch off.

1. *To acknowledge and silence EDM alert:*
   a. PFD ALERT Softkey .....PRESS AND RELEASE

2. *To cancel auto-descent::*
   a. AP/TRIM DISC Switch .....PRESS AND RELEASE

3.14.2 CABIN ALT HIGH

CABIN ALT HIGH

Conditions:

- Cabin altitude above 10,000 ft.

1. **Crew Oxygen Masks (above 14,000 ft).....DON**
2. MASK MICS Switch .....AS REQUIRED
3. Reduce power and immediately begin a descent to 10,000 ft or minimum safe altitude (if higher).
4. If cabin altitude is rising rapidly accelerate to V_{MO}/M_{MO} to maximize descent rate.

CAUTION

IF SIGNIFICANT TURBULENCE IS EXPECTED, OR IF SUSPECTED STRUCTURAL PROBLEM, DO NOT DESCEND AT INDICATED AIRSPEEDS GREATER THAN V_O.

5. DOOR SEAL Switch .....CHECK ON
6. PRESS AIR Switch .....CHECK ON
7. DUMP VALVE Switch .....CHECK OFF
8. HI PRESS AIR Switch ..... ON
9. CABIN Indicator..... CHECK

10. *If cabin altitude remains at or above 10,000 ft:*
    a. PRESS CTRL 1 Circuit Breaker (**L-B- ◄3**)..... CHECK, RESET ONE TIME IF OPEN
    b. PRESS CTRL 2 Circuit Breaker (**R-T- ◄1**)..... CHECK, RESET ONE TIME IF OPEN
    c. MASS FLOW Circuit Breaker (**R-T- ◄5**)..... CHECK, RESET ONE TIME IF OPEN

11. *If cabin altitude remains at or above 10,000 ft:*
    a. DEFROST Switch .....OFF
    b. EMERG PRESS Switch..... ON
    c. HI PRESS AIR Switch ..... OFF
    d. PRESS AIR Switch..... OFF
    e. EMERG PRESS Circuit Breaker (**R-T- ◄2**)..... CHECK, RESET ONE TIME IF OPEN

12. *If cabin altitude exceeds 14,000 ft and passenger masks do not automatically deploy:*
    a. EMERG OXYGEN Switch ..... ON

CAUTION

USE OF DEFROST TOGETHER WITH EMERG PRESS IS PROHIBITED.

3.14.3 CHECK GEAR

CHECK GEAR
"CHECK GEAR"

Conditions:

- Landing gear is not in the down and locked position, and:
  - Flaps FULL selected, or
  - GNSS AGL altitude is less than 500 ft and airplane is descending more than 100 fpm, or
  - GNSS AGL altitude is less than 200 ft and airplane is descending.

❖ ***IF UNDER 500 FT AGL:***
1. Airplane .....GO AROUND

❖ *IF OVER 500 FT AGL*

1. LANDING GEAR Control.....DOWN

2. *If* CHECK GEAR *Warning persists:*
   a. Airplane .....GO AROUND
   b. Perform LANDING GEAR FAILS TO EXTEND (3A.4.2).

3.14.4 DE-ICE FAIL

DE-ICE FAIL

Conditions:

- De-ice boot system failure.

1. DE-ICE BOOTS Switch .....OFF

2. *If* DE-ICE FAIL *Warning persists or returns:*
   a. DE-ICE BOOTS Circuit Breaker (**L-T-◄11**) ..... PULL

3. Exit icing conditions.

4. Visually inspect the leading edges of both wings and both horizontal stabilizers.

5. *If residual ice remains on a leading edge, or any de-ice boots fail to deflate or are ruptured:*
   a. Final approach airspeed ..... FLAPS UP: 130 KIAS
      FLAPS T/O: 125 KIAS

Amplification

Disabling the de-ice boots system also disables Pusher Ice Mode, which reduces the stall protection margin normally available with the ice-protection systems on. Use the Pusher Ice Mode reference speeds to provide additional stall protection in case of residual ice on the leading edge or in case of a leading edge compromised by boot failure.

3.14.5 DOOR UNLOCKED

DOOR UNLOCKED

Condition:

- Door pin position switches not all closed.

1.	**Crew Oxygen Masks (above 14,000 ft)**	**DON**
2.	MASK MICS Switch	AS REQUIRED

WARNING

DO NOT ADJUST THE POSITION OF DOOR HANDLES IN FLIGHT.

3.	All Occupants	SEATED WITH SEATBELTS SECURE
4.	Airspeed	REDUCE TO MINIMUM PRACTICAL
5.	Descend to 10,000 ft or minimum safe altitude (if higher).	
6.	Landing Field Elevation	SET TO 10,000 ft
7.	Land as soon as possible.	

NOTE

Flight at lower altitudes significantly decreases fuel efficiency and range.

Amplification

Setting the landing field elevation and descending to 10,000 ft reduces cabin differential pressure to reduce stress on the door.

3.14.6 ENGINE CHIP

ENGINE CHIP

Condition:

- Engine chip detector has activated.

1.	Engine Instruments	CHECK & MONITOR
2.	POWER Lever	REDUCE TO MINIMUM REQUIRED FOR SAFE FLIGHT
3.	Land as soon as possible.	
4.	Maintenance required.	

CAUTION

CHIPS OF METAL IN THE ENGINE MAY BE AN EARLY INDICATION OF IMPENDING ENGINE FAILURE.

CAUTION

MAKE BEST EFFORT TO RETAIN GLIDE CAPABILITY TO A SELECTED LANDING AIRFIELD WHILE MANEUVERING TO LAND.

3.14.7 GEN FAIL

GEN FAIL

Conditions:

- Generator amps less than 5, and
- N_G is greater than 75%

1. STARTER GEN Switch ..... VERIFY ON
2. GEN AMP Indicator ..... CHECK

3. *If generator amperage is zero or less:*
   a. GEN RESET Switch ..... PRESS & RELEASE

4. *If* GEN FAIL *Warning does not extinguish:*
   a. STARTER GEN Switch ..... OFF
   b. ALTN AMP Indicator ..... VERIFY POSITIVE
   c. Electrical Load ..... MONITOR, MAXIMUM 41 AMPS (per 2.4.3, alternator limitations)
   d. Descend to FL190 or below.

NOTE

Alternator output is internally limited to 41 Amps (per 2.4.3, alternator limitations). Additional load will result in output voltage being reduced. Alternator operation is limited to one hour.

5. Exit icing conditions as soon as possible.

When not in icing conditions and airframe is clear of residual ice:

6. PROP HEAT Switch ..... OFF
7. PITOT STALL HT Switch ..... OFF
8. DE-ICE BOOTS Switch ..... OFF
9. Non-Essential Electrical Equipment ..... OFF
10. Electrical Load ..... MONITOR, MAXIMUM 41 AMPS
11. Land as soon as practical.

Amplification

The maximum duration of reserve power with an operating standby alternator is approximately 75 minutes if icing protection equipment (pneumatic boots, stall heat, pitot heat) is off and 60 minutes if ice protection equipment is required.

The ALTERNATOR ON Caution should display.

3.14.8 ITT HIGH

ITT HIGH

Condition:

- ITT is above 850°C.

1. POWER Lever..... REDUCE BELOW 850°C AND ITT HIGH WARNING EXTINGUISHES OR MINIMUM POWER FOR SAFE FLIGHT

2. *If* *ITT HIGH* *Warning remains:*
   a. Land as soon as possible, using minimum power.

CAUTION

HIGH ITT AT INTERMEDIATE POWER SETTINGS MAY BE AN EARLY INDICATION OF IMPENDING ENGINE FAILURE.

CAUTION

MAKE BEST EFFORT TO RETAIN GLIDE CAPABILITY TO A SELECTED LANDING AIRFIELD WHILE MANEUVERING TO LAND.

Amplification

Cross-check engine indications. If ambient conditions, fuel flow, and torque output do not correlate with the indicated ITT, the failure may be in the indication system.

3.14.9 NG HIGH

NG HIGH

Condition:

- N_G is above 104%.

1. POWER Lever ..... REDUCE BELOW 104% AND NG HIGH WARNING EXTINGUISHES OR MINIMUM POWER FOR SAFE FLIGHT

2. *If* NG HIGH *Warning remains:*
   a. Land as soon as possible, using minimum power.

CAUTION

HIGH N_G AT INTERMEDIATE POWER SETTINGS MAY BE AN EARLY INDICATION OF IMPENDING ENGINE FAILURE.

CAUTION

MAKE BEST EFFORT TO RETAIN GLIDE CAPABILITY TO A SELECTED LANDING AIRFIELD WHILE MANEUVERING TO LAND.

Amplification

Cross-check engine indications. If ambient conditions, fuel flow, and torque output do not correlate with the indicated N_G, the failure may be in the indication system.

3.14.10 NP HIGH

NP HIGH

Condition:
- N_P is above 1730 RPM.

1. PROP Lever .....REDUCE TO 1700 RPM OR LESS

2. *If N_P not under control of PROP Lever:*
   a. POWER Lever ..... REDUCE (to idle if necessary)

❖ *IF N_P REMAINS BETWEEN 1730 AND 1802 RPM:*

3. Airspeed ..... 150 KIAS
4. POWER Lever..... AS REQUIRED TO SUSTAIN FLIGHT
5. Land as soon as practical.

❖ *IF N_P IS ABOVE 1802 RPM:*

3. Airspeed .....120 KIAS OR LESS
4. POWER Lever..... AS REQUIRED TO SUSTAIN FLIGHT
5. Land as soon as possible.

NOTE

Overspeed operation up to 106% (1802 RPM) is allowed with no time limit. Operation from 106% (1802 RPM) to 110% (1870 RPM) is limited to 6 minutes. Beyond 6 minutes, engine overhaul is required.

3.14.11 OIL PRESS LOW

OIL PRESS LOW

Conditions:
- N_G is greater than 51%, and
- Oil pressure is less than 60 psi.

1. POWER Lever..... REDUCE TO MINIMUM NECESSARY
2. Land as soon as possible.

CAUTION

OIL PRESSURES UNDER 60 PSI MAY BE AN EARLY INDICATION OF IMPENDING ENGINE FAILURE.

CAUTION

MAKE BEST EFFORT TO RETAIN GLIDE CAPABILITY TO A SELECTED LANDING AIRFIELD WHILE MANEUVERING TO LAND.

3.14.12 OIL TEMP HIGH

OIL TEMP HIGH

Condition:

- Oil temperature is greater than 110°C.

1. POWER Lever ..... REDUCE
2. Airspeed..... INCREASE (if practical)

3. *If* *OIL TEMP HIGH* *Warning remains:*
   a. Land as soon as possible.
   b. Maintenance required.

CAUTION

OIL TEMPERATURES ABOVE 110°C ARE UNSAFE AND MAY LEAD TO A LOSS OF OIL PRESSURE AND/OR ENGINE FAILURE.

CAUTION

MAKE BEST EFFORT TO RETAIN GLIDE CAPABILITY TO A SELECTED LANDING AIRFIELD WHILE MANEUVERING TO LAND.

NOTE

Oil temperature between 105 to 110°C is limited to 10 minutes.

3.14.13 OVERSPEED

OVERSPEED

"OVERSPEED-OVERSPEED-OVERSPEED"

Condition:

- Airspeed is greater than V_{MO} or M_{MO}.

1. Power Lever..... REDUCE
2. Pitch..... UP AS REQUIRED

NOTE

Unless disabled, Electronic Stability Protection (ESP) will engage to automatically pitch the aircraft up to reduce airspeed.

3.14.14 RUD LIM FAIL

RUD LIM FAIL

Conditions:

- Rudder limiter failed to disengage and torque is below 20%, or
- Rudder limiter failed to engage and torque is above 20%.

1. RUDDER LIMITER Circuit Breaker (**R-T-1►**) .....PULL
2. Rudder Travel ..... DETERMINE

❖ *IF RUDDER TRAVEL IS NOT LIMITED:*

3. Do not apply large left rudder input with torque above 20%.

❖ *IF RUDDER TRAVEL IS LIMITED:*

3. Select a runway with minimum crosswind.

CAUTION

MAXIMUM RIGHT CROSSWIND IS 10 KNOTS. STEERING DURING LANDING ROLLOUT WILL BE REDUCED.

4. Flaps.....T/O
5. Approach Speed ..... 110 KIAS

3.14.15 STICK PUSH

STICK PUSH
"PUSH-PUSH-PUSH"

Condition:

- Stick pusher is activated.

1. Control Yoke..... GRASP AND MAINTAIN CONTROL
2. Pitch..... REDUCE ANGLE-OF-ATTACK

3. POWER Lever .....INCREASE AS REQUIRED
4. Airplane .....RECOVER TO LEVEL FLIGHT

NOTE

Activation of the stick pusher will disconnect the autopilot.

3.14.16 STICK SHAKER

STICK SHAKER
"STALL-STALL-STALL"

Condition:

- Stick shaker is activated.

1.	**Control Yoke**	**GRASP AND MAINTAIN CONTROL**
2.	**Pitch**	**REDUCE ANGLE-OF-ATTACK**
3.	POWER Lever	INCREASE AS REQUIRED
4.	Airplane	RECOVER TO LEVEL FLIGHT

3.14.17 TORQUE HIGH

TORQUE HIGH

Condition:

- Torque is greater than 100%.

1. PROP Lever ..... MAX RPM
2. POWER Lever ..... REDUCE UNTIL TORQUE BELOW 100% OR MINIMUM SAFE POWER

3. *If* TORQUE HIGH *Warning remains:*
   a. Land as soon as possible, using minimum power.

Amplification

Cross-check engine indications and airplane performance. If ambient conditions, fuel flow, and airplane performance do not correlate with the indicated torque, the failure may be in the indication system.

3.14.18 UNDERSPEED PROTECT ACTIVE

UNDERSPEED PROTECT ACTIVE

Conditions:

- Autopilot engaged, and
- Airspeed below minimum threshold.

Recovery may be initiated in one of three ways:

1. POWER Lever..... SMOOTHLY INCREASE AS REQUIRED TO CORRECT UNDERSPEED CONDITION

CAUTION

RAPID POWER APPLICATION TO A HIGH POWER SETTING MAY RESULT IN PITCH ATTITUDES UP TO 20 DEGREES NOSE UP DURING RECOVERY FROM UNDERSPEED PROTECTION.

or

1. AP/TRIM DISC Switch ..... PRESS AND RELEASE
2. Manually fly the airplane.

or

1. Autopilot ..... CHANGE MODES TO INCREASE AIRSPEED

3.14.19 WSH HEAT ON

WSH HEAT ON

Conditions:

- WINDSH HEAT switch is ON, and
- OAT is greater than 5°C, the maximum temperature approved for use of the WSH HEAT system and has been on for more than 30 seconds

1. WINDSH HEAT Switch ..... OFF

2. *If* *WSH HEAT ON* *Warning persists:*
   a. POWER Lever ..... REDUCE TO MINIMUM NECESSARY FOR FLIGHT

3. Pilot Windshield ..... CHECK

❖ *IF BUBBLING, ABNORMALITIES, OR VISUAL DISTORTION IS OBSERVED:*

1. Crew Oxygen Masks (above 14,000 ft) ..... DON
2. MASK MICS Switch ..... AS REQUIRED
3. Reduce power and descend to 10,000 ft or minimum safe altitude (if higher).
4. Land as soon as possible using side-slip maneuver, if necessary, to maintain visual contact with the runway.

❖ *IF NO BUBBLING, ABNORMALITIES, OR VISUAL DISTORTION IS OBSERVED:*

1. Avoid icing conditions.
2. Land as soon as practical.

3.15 WARNING (RED) CAS MESSAGES — ON GROUND

3.15.1 CHECK GEAR — ON GROUND

CHECK GEAR
"CHECK GEAR"

1. LANDING GEAR Control ..... VERIFY DOWN
2. If taxiing, stop immediately and do not turn.
3. If the engine is running, shut down engine.
4. Maintenance required before flight.

3.15.2 DOOR UNLOCKED — ON GROUND

DOOR UNLOCKED

Conditions:

- Door pin position switches not all closed

1. If taxiing, stop airplane in a safe location.
2. Cabin Door .....CHECK HANDLE AND LOCK

3. *If cabin door secure and* DOOR UNLOCKED *Warning persists:*
   a. Shut down engine.
   b. Maintenance required before flight.

3.15.3 ENGINE CHIP — ON GROUND

ENGINE CHIP

Condition:

- Engine chip detector has activated

❖ *BEFORE ENGINE START*

1. Do not start engine.
2. Maintenance required before flight.

❖ *AFTER ENGINE START AND BEFORE TAKEOFF*

1. Return to parking.
2. Shut down engine.
3. Maintenance required before flight.

3.15.4 ITT HIGH — ON GROUND

ITT HIGH

Condition:

- ITT is above 850°C

1. COND Lever	**FUEL CUTOFF**
2. IGNITER Switch	AUTO

After N_G below 30%:

3. START Switch	PRESS & RELEASE

After 30 seconds or ITT below 130°C whichever occurs first:

4. STARTER GEN Switch	OFF

3.15.5 OIL TEMP HIGH — ON GROUND

OIL TEMP HIGH

Condition:

- Oil temperature is greater than 110°C

1. Airplane	POSITION INTO THE WIND
2. COND Lever	HIGH
3. PROP Lever	MAX RPM
4. POWER Lever	INCREASE

5. *If* OIL TEMP HIGH *Warning remains:*
   a. Shut down engine
   b. Maintenance required before flight.

SECTION 3A

ABNORMAL PROCEDURES

TABLE OF CONTENTS

3A.1 GENERAL 3
3A.2 DRY MOTORING 3
3A.3 ENGINE 3
3A.3.1 ENGINE DOES NOT SHUT DOWN 3
3A.4 LANDING GEAR 4
3A.4.1 LANDING GEAR FAILS TO RETRACT 4
3A.4.2 LANDING GEAR FAILS TO EXTEND 5
3A.5 ABNORMAL LANDINGS 6
3A.5.1 LANDING WITH MAIN GEAR UNSAFE 6
3A.5.2 LANDING WITH NOSE GEAR UNSAFE 7
3A.5.3 FLAT TIRE DURING LANDING 7
3A.5.4 LANDING WITH FAILED BRAKES 8
3A.6 PRESSURIZATION/OXYGEN 9
3A.6.1 CABIN DOES NOT DEPRESSURIZE BEFORE LANDING 9
3A.7 FLIGHT ENVIRONMENT 9
3A.7.1 INADVERTENT ICING ENCOUNTER 9
3A.7.2 FROST/MOISTURE ON INTERNAL WINDSHIELD 9
3A.8 CAUTION (AMBER) CAS MESSAGES — IN FLIGHT 10
3A.8.1 ALTERNATOR ON 10
3A.8.2 AUTO FUEL FAIL 10
3A.8.3 AUTO FUEL OFF 11
3A.8.4 AUTO PTRM FAIL 11
3A.8.5 BATT VOLTS LO 12
3A.8.6 DIFF P HIGH 12
3A.8.7 DOOR SEAL OFF 13
3A.8.8 DUCT TEMP HIGH 13
3A.8.9 FLAPS FAIL 14
3A.8.10 FUEL FILT BLOCK 14
3A.8.11 FUEL IMBALANCE 15
3A.8.12 FUEL PRESS LOW 15
3A.8.13 FUEL PUMP OFF 16
3A.8.14 FUEL QTY LOW 17
3A.8.15 GEAR MISCOMP 17
3A.8.16 HYD PRESS 17
3A.8.17 ICE 18
3A.8.18 INERT SEP FAIL 18
3A.8.19 MAN PTRM FAIL 19
3A.8.20 MISTRIM 20
3A.8.21 NITROGEN LOW 20

3A.8.22 OXY SYS OFF 21
3A.8.23 OXYGEN LOW 21
3A.8.24 PITOT HEAT OFF 21
3A.8.25 PITOT HT FAIL 22
3A.8.26 PITOT RELAY FAIL 22
3A.8.27 PRESS AIR OFF 23
3A.8.28 PROP HEAT FAIL 23
3A.8.29 PUSH MODE FAIL 23
3A.8.30 PUSHER OFF 24
3A.8.31 STALL CMP FAIL 24
3A.8.32 STALL HT FAIL 25
3A.8.33 STARTER ON 26
3A.8.34 TRIM DISC 26
3A.8.35 WSH HEAT ON 26
3A.9 CAUTION (AMBER) CAS MESSAGES — ON GROUND 27
3A.9.1 BATT VOLTS LO — ON GROUND 27
3A.9.2 FLAPS FAIL — ON GROUND 27
3A.9.3 GEAR MISCOMP — ON GROUND 27
3A.9.4 NITROGEN LOW — ON GROUND 27
3A.9.5 OXYGEN LOW — ON GROUND 28
3A.9.6 PITOT HT FAIL — ON GROUND 28
3A.9.7 PUSHER OFF — ON GROUND 28
3A.9.8 STALL CMP FAIL — ON GROUND 28
3A.9.9 STALL HT FAIL — ON GROUND 29
3A.9.10 STARTER ON 29

3A.1 GENERAL

This section contains recommended procedures for different abnormal system and/or flight conditions. Refer to Section 9 “Supplements” for additional emergency procedures associated with optional or particular equipment.

Many abnormal procedures require immediate action by the pilot, leaving little time to consult the abnormal procedures. Prior knowledge of these procedures and a thorough understanding of the airplane systems are prerequisites for safe airplane handling.

The abnormal procedures use the terms “Land as soon as possible” and “Land as soon as practical.” For the purposes of these procedures, these terms are defined as follows:

- Land as soon as possible – Land without delay at the nearest suitable airport where a safe approach and landing is reasonably assured.
- Land as soon as practical – Landing airport and duration of flight are at the discretion of the pilot. Extended flight beyond the nearest suitable airport where a safe approach and landing is reasonably assured is not recommended.

Abnormal procedures alone cannot protect against all situations. Good airmanship must be used in conjunction with the emergency procedures to manage the emergency.

3A.2 DRY MOTORING

1. POWER Lever ..... IDLE
2. PROP Lever ..... FEATHER
3. COND Lever ..... FUEL CUTOFF
4. BATT 1 & BATT 2 Switches ..... ON
5. L & R FUEL PUMP Switches ..... ON
6. IGNITER Switch ..... AUTO
7. STARTER GEN Switch ..... ON
8. START Switch ..... PRESS & RELEASE

9. Motor at least 15 seconds.

10. STARTER GEN Switch ..... OFF
11. L & R FUEL PUMP Switches ..... OFF
12. BATT 1 & BATT 2 Switches ..... OFF

3A.3 ENGINE

3A.3.1 ENGINE DOES NOT SHUT DOWN

1. FUEL TANK SELECTOR Knob ..... OFF

After N_G is below 10%:

2. STARTER GEN Switch ..... OFF
3. L & R FUEL PUMP Switches ..... OFF
4. BATT 1 & BATT 2 Switches ..... OFF
5. Maintenance required.

3A.4 LANDING GEAR

3A.4.1 LANDING GEAR FAILS TO RETRACT

Conditions:

- LANDING GEAR control up, and
- One or more gear position indicators remain red after a normal gear actuation movement period

1. Airspeed.....BELOW V_{LO} (150 KIAS)
2. Landing gear indicators ..... CHECK

3. *If landing gear retraction failure persists:*
   a. LANDING GEAR Control .....DOWN
   b. Land as soon as practical.

4. *If* *HYD PRESS* *Caution appears:*
   a. Refer to HYD PRESS (3A.8.17)

NOTE

If either the left or right main gear does not indicate up-and-locked with the LANDING GEAR control in the UP position, the hydraulic pump will remain active, eventually resulting in a HYD PRESS Caution.

3A.4.2 LANDING GEAR FAILS TO EXTEND

Conditions:

- LANDING GEAR control DOWN, and
- One or more gear position indicators not indicating down and locked (green) after a normal gear actuation movement period

1. Airspeed ..... BELOW 150 KIAS
2. Landing gear indicators ..... CHECK
3. LANDING GEAR Control ..... UP, WAIT FOR GEAR RETRACTION TO COMPLETE, THEN DOWN

4. *If landing gear fails to extend normally:*
   a. Airspeed ..... BELOW 130 KIAS
   b. LANDING GEAR Control ..... DOWN
   c. Emergency Gear Extension Handle ..... ACTIVATE

WARNING

AFTER EMERGENCY GEAR DEPLOYMENT, DO NOT ATTEMPT TO RETRACT GEAR.

   d. POWER Lever ..... AS REQUIRED
   e. Airspeed ..... BELOW 150 KIAS

❖ *IF ALL LANDING GEARS INDICATE UNSAFE:*

5. Perform LANDING WITH GEAR UP (3.8.2).

❖ *IF EITHER OR BOTH MAIN LANDING GEAR INDICATES UNSAFE*

5. Perform LANDING WITH MAIN GEAR UNSAFE (3A.5.1).

❖ *IF NOSE LANDING GEAR INDICATES UNSAFE:*

5. Perform LANDING WITH NOSE LANDING GEAR UNSAFE (3A.5.2).

Amplification

The emergency gear extension may only be used once per flight and will require servicing after its use.

NOTE

A failure of any of the up-lock or landing gear actuators results in an inability to extend the associated gear.

NOTE

Although a loss of hydraulic pressure is independent from the loss of nitrogen pressure, a single hose is common to both fluid paths, a blockage or leakage of which could conceivably be a single point of failure common to both extension functions.

3A.5 ABNORMAL LANDINGS

3A.5.1 LANDING WITH MAIN GEAR UNSAFE

Condition:

- LANDING GEAR control DOWN
- One or both main landing gear not indicating down and locked (green)

1. If able, have ground personnel visually verify gear position.

2. FUEL AUTO SEL Switch ..... OFF
3. FUEL TANK SELECTOR Knob ..... SELECT SIDE WITH FAILED GEAR
   (to lighten wing; maximum fuel imbalance 20 US gal)
4. Passengers ..... BRIEF
5. Flaps ..... FULL
6. Final approach airspeed ..... 95 KIAS

7. Touchdown gently on good gear; avoid sideloading; avoid heavy braking.
8. Use full aileron during roll-out to lift the wing with the unsafe landing gear.
9. Roll straight ahead; do not turn.

10. POWER Lever ..... IDLE (avoid reverse)
11. PROP Lever ..... FEATHER
12. COND Lever ..... FUEL CUTOFF
13. FUEL TANK SELECTOR Knob ..... OFF

After the airplane has stopped:

14. BATT 1 & BATT 2 Switches ..... OFF
15. Airplane ..... EVACUATE

Amplification

Choose a runway with headwind or crosswind blowing from failed gear side. Align the airplane to land on the runway edge opposite the failed landing gear.

If the gear collapses, maintain directional control with rudder and opposite brakes.

Do not taxi the airplane before the deficiency is rectified.

3A.5.2 LANDING WITH NOSE GEAR UNSAFE

Condition:

- LANDING GEAR control DOWN
- Nose landing gear not indicating down and locked (green)

1. If able, have ground personnel visually verify gear position.

2. Passengers ..... BRIEF
3. Flaps..... FULL
4. Final approach airspeed..... 95 KIAS

5. Land on main wheels, keep nose high.

6. POWER Lever..... IDLE
7. PROP Lever..... FEATHER
8. COND Lever..... FUEL CUTOFF
9. FUEL TANK SELECTOR Knob ..... OFF

10. Lower nose wheel slowly; use gentle to no braking.

After the airplane has stopped:

11. BATT 1 & BATT 2 Switches..... OFF
12. Airplane ..... EVACUATE

Amplification

The nose gear is considered unsafe for landing when it is not indicating down and locked (green).

If the gear collapses, maintain directional control with rudder and differential brakes.

Do not taxi the airplane before the deficiency is rectified.

3A.5.3 FLAT TIRE DURING LANDING

1. Direction ..... CONTROL USING BRAKES AND NOSE WHEEL STEERING
2. Brakes ..... MINIMIZE BRAKING IF ABLE
3. POWER Lever..... REVERSE AS REQUIRED
4. Stop the airplane to minimize damage to wheels.
5. Perform SHUTDOWN (4.3.15).

3A.5.4 LANDING WITH FAILED BRAKES

Conditions:

- Wheel brakes ineffective
- Brake pedal excessively soft when pressed
- Asymmetric braking

1. *If only one brake is inoperative:*
   a. Choose runway with crosswind from the side of the inoperative brake, if possible.
   b. Land on the side of the runway corresponding to the inoperative brake.

After touchdown:

2. POWER Lever ..... REVERSE AS REQUIRED

3. Maintain directional control with nose wheel steering.
4. Bring airplane to a stop with gentle use of reverse thrust and gentle application of remaining brake.

After airplane stops:

5. POWER Lever ..... IDLE
6. PROP Lever..... FEATHER
7. COND Lever ..... FUEL CUTOFF
8. Tow airplane to parking.

3A.6 PRESSURIZATION/OXYGEN

3A.6.1 CABIN DOES NOT DEPRESSURIZE BEFORE LANDING

1. GROUND FRESH AIR Switch ..... OFF
2. DUMP VALVE Switch ..... ON
3. PRESS AIR Switch ..... OFF
4. DOOR SEAL Switch..... OFF
5. Maintenance required prior to next pressurized flight.

3A.7 FLIGHT ENVIRONMENT

3A.7.1 INADVERTENT ICING ENCOUNTER

1. IGNITER Switch ..... ON
2. DE-ICE BOOTS Switch..... ON
3. INERT SEP Switch..... ON
4. PROP HEAT Switch..... ON
5. PITOT STALL HT Switch ..... ON
6. DEFROST Switch ..... ON

CAUTION

USE OF DEFROST TOGETHER WITH EMERG PRESS IS PROHIBITED.

7. *If required to clear ice from windshield:*
   a. WINDSH HEAT Switch..... ON
   After ice clears from windshield:
   b. WINDSH HEAT Switch..... OFF

8. Exit icing conditions.

After departing from icing conditions and airframe is clear of residual ice:

9. DEFROST Switch .....AS REQUIRED
10. PITOT STALL HT Switch .....MAINTAIN ON
11. PROP HEAT Switch..... OFF
12. WINDSH HEAT Switch ..... OFF
13. INERT SEP Switch.....AS REQUIRED
14. DE-ICE BOOTS Switch..... OFF
15. IGNITER Switch .....AS REQUIRED

3A.7.2 FROST/MOISTURE ON INTERNAL WINDSHIELD

1. DEFROST Switch ..... ON

CAUTION

USE OF DEFROST TOGETHER WITH EMERG PRESS IS PROHIBITED.

2. *If windshield does not clear:*
   a. AIR COND Switch ..... ON
   b. Climate Fan Control..... MAXIMUM (clockwise)
   c. Manually clean enough area for visibility using cloth rag.

3A.8 CAUTION (AMBER) CAS MESSAGES — IN FLIGHT

3A.8.1 ALTERNATOR ON

ALTERNATOR ON

Conditions:

- Standby alternator is on
- Alternator is generating power, and
- BATT 1 V below 28.0

1. Descend to FL190 or below.
2. Monitor both battery voltages for indication of discharge.
3. ALTN AMPS Indicator ..... MONITOR

If battery voltages decrease over time:

4. Reduce electrical load.
5. Land as soon as practical.

After departing from icing conditions and airframe is clear of residual ice:

6. Reduce electrical load.
7. Land as soon as practical.

NOTE

Standby alternator use is limited to one hour.

NOTE

Alternator output is internally limited to 41 amps. Additional load will result in battery voltage being reduced.

3A.8.2 AUTO FUEL FAIL

AUTO FUEL FAIL

Condition:

- Automatic fuel selector controller is failed

1. FUEL AUTO SEL Switch ..... OFF
2. FUEL TANK SELECTOR Knob ..... OPERATE MANUALLY

CAUTION

MAXIMUM FUEL IMBALANCE BETWEEN TANKS IS 20 US GALLONS.

3A.8.3 AUTO FUEL OFF

AUTO FUEL OFF

Condition:

- Automatic fuel selector switch is OFF

1. FUEL AUTO SEL Switch..... ON

2. *If* AUTO FUEL OFF *Caution displayed:*
   a. FUEL AUTO SEL Switch..... OFF
   b. FUEL TANK SELECTOR Knob.....OPERATE MANUALLY

CAUTION

MAXIMUM FUEL IMBALANCE BETWEEN TANKS IS 20 US GALLONS.

3A.8.4 AUTO PTRM FAIL

AUTO PTRM FAIL

Conditions:

- Autopilot engaged, and
- Trim monitor detects an automatic pitch trim failure.

1. Monitor flight path.

2. *If autopilot deviates from commanded flight path:*
   a. Control Yoke..... GRASP AND MAINTAIN CONTROL
   b. AP/TRIM DISC Switch..... PRESS AND RELEASE
   c. TRIM RESET Switch ..... PRESS AND RELEASE
   d. Elevator..... MANUALLY RETRIM AS REQUIRED

3. Land as soon as practical.

3A.8.5 BATT VOLTS LO

BATT 1 VOLTS LO
BATT 2 VOLTS LO

Conditions:

- Battery voltage is below 25.0 V with engine running, or
- Battery voltage is below 24.2 V with engine not running

1. STBY ALTN Switch ..... CHECK ON
2. ALTN AMP Indicator ..... CHECK

3. If ALTN AMP indicator is 0:
   a. STBY ALTN Switch ..... OFF, WAIT 5 SECS, ON

4. Monitor both battery voltages for indication of discharge.
5. Land as soon as possible.

Amplification

This should only occur in the event of a generator failure and possible alternator failure, and the batteries have been drawn down over time.

3A.8.6 DIFF P HIGH

DIFF P HIGH

Condition:

- Differential pressure greater than 6.9 psid

1. EMERG PRESS Switch ..... OFF
2. HI PRESS AIR Switch ..... OFF

3. *If* *DIFF P HIGH* *Caution remains:*
   a. Set landing field elevation in PFD to 10,000 ft.
   b. Descend to 10,000 ft or minimum safe altitude (if higher).
   c. DUMP VALVE Switch ..... ON

4. *If* *DIFF P HIGH* *Caution remains:*
   a. PRESS AIR Switch ..... OFF
   b. GROUND FRESH AIR Switch ..... ON

NOTE

Use of supplemental oxygen may be required.

5. Land as soon as practical.

NOTE

Flight at lower altitudes significantly decreases fuel efficiency and range.

3A.8.7 DOOR SEAL OFF

DOOR SEAL OFF

Conditions:

- Door seal switch is OFF

1. DOOR SEAL Switch..... ON

3A.8.8 DUCT TEMP HIGH

DUCT TEMP HIGH

Condition:

- Cabin bleed air duct temperature is high

1. POWER Lever.....REDUCE TO MINIMUM PRACTICAL
2. EMERG PRESS Switch ..... OFF
3. HI PRESS AIR Switch..... OFF
4. Climate Hot Air Control .....FULL COLD (counterclockwise)
5. DEFROST Switch ..... OFF
6. WINDSH HEAT Switch ..... OFF

NOTE

Windshield heat may be turned back on, if necessary for forward visibility, five minutes prior to landing.

7. *If* *DUCT TEMP HIGH* *Caution remains after 5 minutes:*
   a. Reduce power and descend immediately to 10,000 ft or minimum safe altitude (if higher).
   b. PRESS AIR Switch..... OFF
   c. Land as soon as practical.

NOTE

Flight at lower altitudes significantly decreases fuel efficiency and range.

3A.8.9 FLAPS FAIL

FLAPS FAIL

Conditions:

- Flaps did not reach selected position within 15 seconds, or
- Flap limit switch failure

1. FLAPS Circuit Breaker (**R-B- 3►**) ..... PULL

2. Visually determine flap position.

3. Airspeed..... 180 KIAS MAXIMUM (Flaps UP to T/O)
   130 KIAS MAXIMUM (Flaps greater than T/O)

4. Land as soon as practical.
   a. Select runway with sufficient landing distance for flap position.
   b. Landing Gear .....DOWN
   c. Final approach airspeed..... FLAPS UP: 115 KIAS
      FLAPS T/O: 110 KIAS
      FLAPS FULL: 95 KIAS

CAUTION

WITH FLAPS UP ALLOW FOR LANDING DISTANCE INCREASE OF 65% MORE THAN FLAPS FULL.

CAUTION

WHEN LANDING IN PUSHER ICE MODE INCREASE LANDING DISTANCE BY 55%. THIS MODE IS ACTIVE WITH DE-ICE BOOTS OR PROP HEAT.

NOTE

If you cannot determine flaps are in a designated position (T/O or FULL), use the next higher final approach airspeed.

3A.8.10 FUEL FILT BLOCK

FUEL FILT BLOCK

Condition:

- Fuel filter bypass is impending or has occurred

1. Fuel Pressure ..... MONITOR
2. Land as soon as possible.
3. Maintenance required.

Amplification

Fuel is or may soon be bypassing the fuel filter for delivery to the engine.

Any existing particulate matter in the fuel supply may block fuel flow through the fuel control unit, causing an engine flame-out.

3A.8.11 FUEL IMBALANCE

FUEL IMBALANCE

Condition:

- More than a 20-gallon imbalance between fuel tanks

1. FUEL QTY ..... CHECK
2. FUEL AUTO SEL Switch ..... OFF
3. FUEL TANK SELECTOR Knob ..... FULLEST TANK

Once fuel tanks are balanced again:

4. FUEL AUTO SEL Switch ..... ON

5. *If* FUEL IMBALANCE *Caution reappears:*
   a. FUEL AUTO SEL Switch ..... OFF
   b. FUEL TANK SELECTOR Knob ..... OPERATE MANUALLY

3A.8.12 FUEL PRESS LOW

FUEL PRESS LOW

Condition:

- Fuel pressure at the engine pump inlet is less than 10 psi

1. L & R FUEL PUMP Switches ..... CHECK ON
2. FUEL AUTO SEL Switch ..... OFF
3. FUEL TANK SELECTOR Knob ..... SWITCH TANKS

❖ *IF* FUEL PRESS LOW *CAUTION EXTINGUISHES:*

4. FUEL QTY ..... CHECK REMAINING
5. Switch fuel tanks only as necessary to remain within fuel imbalance limitations.

❖ *IF* FUEL PRESS LOW *CAUTION PERSISTS*

6. POWER Lever ..... REDUCE TO MINIMUM NECESSARY FOR CONTINUED FLIGHT, AVOID HIGH POWER AND RAPID THROTTLE MOVEMENTS
7. Descend to FL210 or below.
8. Land as soon as practical.

CAUTION

EXTENDED OPERATION WITH FUEL PRESSURE BELOW 5 PSI MAY RESULT IN ENGINE DAMAGE.

NOTE

Record the amount of time the engine has run with fuel pressure at or below 5 PSI in the engine log book.

3A.8.13 FUEL PUMP OFF

L FUEL PUMP OFF
R FUEL PUMP OFF

Condition:

- Left or right fuel pump switch is OFF

1. L and/or R FUEL PUMP Switches.....ON

2. *If* *L/R FUEL PUMP OFF* *Caution persists:*
   a. IGNITER Switch.....ON
   b. FUEL QTY.....CHECK REMAINING
   c. FUEL AUTO SEL Switch.....OFF
   d. FUEL TANK SELECTOR Knob ..... TANK WITH OPERABLE PUMP
   e. Descend to FL210 or below.
   f. Switch fuel tanks as necessary to remain within fuel imbalance limitations.
   g. Land as soon as possible.

CAUTION

MAXIMUM FUEL IMBALANCE BETWEEN TANKS IS 20 US GALLONS.

CAUTION

EXTENDED OPERATION WITH FUEL PRESSURE BELOW 5 PSI MAY RESULT IN ENGINE DAMAGE.

NOTE

Record the amount of time the engine has run with fuel pressure at or below 5 PSI in the engine log book.

3A.8.14 FUEL QTY LOW

L FUEL QTY LOW
R FUEL QTY LOW

Condition:

- Less than 15 gallons in the affected fuel tank

1. FUEL QTY.....CHECK REMAINING
2. IGNITER Switch ..... ON
3. FUEL AUTO SEL Switch..... OFF
4. FUEL TANK SELECTOR Knob .....SWITCH TO FULLEST TANK
5. Land as soon as possible.

CAUTION

AVOID UNCOORDINATED FLIGHT (SLIPS OR SKIDS) AND HIGH PITCH ATTITUDES GREATER THAN 10 DEGREES.

3A.8.15 GEAR MISCOMP

GEAR MISCOMP

Conditions:

- One or more landing gears are sensing both up and locked, and down and locked

Before landing:

1. Landing Gear ..... DOWN

2. *If unable to verify landing gear in down-and-locked position:*
   a. Perform LANDING GEAR FAILS TO EXTEND (3A.4.2).

NOTE

Maximum speed with a GEAR MISCOMP is 150 KIAS.

3A.8.16 HYD PRESS

HYD PRESS

Conditions:

- Hydraulic system pressurizing for more than 20 seconds

1. Land as soon as practical.

CAUTION

LANDING GEAR MAY NOT OPERATE NORMALLY.

2. Plan for a possible LANDING GEAR FAILS TO EXTEND (3A.4.2).

3A.8.17 ICE

ICE

Conditions:

- Airframe icing conditions detected.
- Ice protection systems (prop heat and de-ice boots) are not on.

1. Perform INADVERTENT ICING ENCOUNTER (3A.7.1).

3A.8.18 INERT SEP FAIL

INERT SEP FAIL

Condition:

- Inertial separator is not in the commanded position within 30 seconds of the INERT SEP switch being selected ON or OFF

1. INERT SEP Switch ..... OFF

2. *If* *INERT SEP FAIL* *Caution does not extinguish:*
   a. INERT SEP Circuit Breaker (**R-B-1►**)..... PULL
   b. Depart heavy precipitation conditions as soon as possible.

3A.8.19 MAN PTRM FAIL

MAN PTRM FAIL

Conditions:

- Uncommanded pitch trim motion, or
- Pitch trim not responding to commands.

1. *If elevator trim in motion:*
   a. AP/TRIM DISC Switch.....PRESS AND HOLD

CAUTION

HOLD THE CONTROL YOKE FIRMLY. SIGNIFICANT FORCE ON THE CONTROL YOKE MAY BE REQUIRED

   b. TRIM DISC Caution ..... DISPLAYED
   c. AP/TRIM DISC Switch..... RELEASE
   d. ELEV TRIM Circuit Breaker (**R-T-3►)..... PULL**
   e. TRIM RESET Switch ..... PRESS AND RELEASE
   f. AIRSPEED..... ADJUST TO RELIEVE FORCES

2. *If elevator trim not disabled:*
   a. Elevator Trim ..... CHECK FUNCTION
   b. *If elevator trim does not respond to commands:*
      i. ELEV TRIM Circuit Breaker (**R-T-3►) ..... PULL**

3. Land as soon as practical.

3A.8.20 MISTRIM

P MISTRIM
R MISTRIM
Y MISTRIM

Condition:

- Autopilot indicates out-of-trim condition.

1. Control Yoke ..... GRASP AND MAINTAIN CONTROL
2. Rudder Pedals ..... MAINTAIN CONTROL
3. Trim in requested direction.

CAUTION

MANUAL ELEVATOR (PITCH) TRIM WILL CAUSE THE AUTOPILOT TO DISCONNECT. MANUAL RUDDER (YAW) TRIM WILL CAUSE THE YAW DAMPER TO DISCONNECT. HOLD THE CONTROL YOKE FIRMLY. SIGNIFICANT FORCE ON THE CONTROL YOKE MAY BE REQUIRED

3A.8.21 NITROGEN LOW

NITROGEN LOW

Conditions:

- Nitrogen pressure in the emergency landing gear extension system is less than 1700 psi

1. N2PRES ..... MONITOR

2. *If nitrogen pressure is less than 1500 PSI:*
   a. Land as soon as practical.

NOTE

When nitrogen pressure drops below 1500 PSI, there may be insufficient pressure to utilize the emergency landing gear extension system.

3A.8.22 OXY SYS OFF

OXY SYS OFF

Condition:
- The oxygen bottle regulator switch is closed

1. OXYGEN BOTTLE Switch ..... ON

2. *If* OXY SYS OFF *Caution persists:*
   a. OXY PANEL Circuit Breaker (**L-B-◄4**) .....RESET

3. *If* OXY SYS OFF *Caution persists and range considerations allow:*
   a. Descend to FL250.

NOTE

Flight at lower altitudes significantly decreases fuel efficiency and range.

3A.8.23 OXYGEN LOW

OXYGEN LOW

Condition:
- Oxygen bottle pressure is less than 600 psi

❖ *IF ANY OXYGEN MASKS ARE IN USE:*

1. Shut off passenger oxygen to preserve oxygen for crew:
   a. EMERG OXYGEN Switch ..... OFF
   b. PAX OXY Circuit Breaker (L-B-◄12) .....PULL
2. Descend to 10,000 ft or minimum safe altitude (if higher).

❖ *IF ALL OXYGEN MASKS ARE NOT IN USE AND RANGE CONSIDERATIONS PERMIT:*

1. Descend to FL250.

NOTE

Flight at lower altitudes significantly decreases fuel efficiency and range.

3A.8.24 PITOT HEAT OFF

PITOT HEAT OFF

Condition:
- PITOT STALL HT switch is OFF

1. PITOT STALL HT Switch ..... ON

3A.8.25 PITOT HT FAIL

L PITOT HT FAIL
R PITOT HT FAIL

Condition:

- PITOT STALL HT Switch is selected ON, and
- The affected pitot heat is failed

2. PITOT STALL HT Switch.....OFF, THEN ON

3. *If* L PITOT HT FAIL *Caution does not extinguish:*
   a. L PITOT HEAT Circuit Breaker (**L-B-◄6**)..... PULL
   b. Pilot's (Left) PFD..... SELECT ADC2 SENSOR
   c. Notify ATC of loss of RVSM capability.

4. *If* R PITOT HT FAIL *Caution does not extinguish:*
   a. R PITOT HEAT Circuit Breaker (**R-B-5►**)..... PULL
   b. Copilot's (Right) PFD ..... SELECT ADC1 SENSOR
   c. Notify ATC of loss of RVSM capability.

Amplification

The Standby Instrument references the left pitot tube for airspeed.

If the L PITOT HT FAIL Caution appears, expect the possibility of unreliable airspeed indication from ADC1 and the Standby Instrument during operations in visible moisture with an outside air temperature below +4°C.

If the R PITOT HT FAIL Caution appears, expect the possibility of unreliable airspeed indication from ADC2 during operations in visible moisture with an outside air temperature below +4°C.

If necessary, fly by reference to attitude, altitude, and power instruments.

3A.8.26 PITOT RELAY FAIL

PITOT RELAY FAIL

Condition:

- Pitot heat in "on ground" mode

1. PITOT STALL HT Switch.....OFF, THEN ON

2. *If* PITOT RELAY FAIL *Caution remains:*
   a. Remain clear of visible moisture.
   b. Land as soon as practical.

3A.8.27 PRESS AIR OFF

PRESS AIR OFF

Condition:

- PRESS AIR switch is OFF

1. PRESS AIR Switch ..... ON

3A.8.28 PROP HEAT FAIL

PROP HEAT FAIL

Conditions:

- PROP HEAT switch is ON, and
- Outside air temperature is less than 0°C, and
- No propeller heat current is sensed

1. PROP HEAT Switch..... OFF, WAIT 5 SECS, ON

2. *If* PROP HEAT FAIL *Caution reappears:*
   a. PROP HEAT Switch ..... OFF

3A.8.29 PUSH MODE FAIL

PUSH MODE FAIL

Condition:

- SPS pusher schedule does not match airplane configuration

1. Minimum Airspeed .....FLAPS UP: 130 KIAS
   FLAPS T/O: 125 KIAS
   FLAPS FULL: 110 KIAS

CAUTION

WHEN LANDING IN PUSHER ICE MODE INCREASE LANDING DISTANCE BY 55%.

Amplification

If the PUSH MODE FAIL Caution is displayed when both the prop heat and de-ice boots systems are off, then the Pusher Ice Mode schedule is incorrectly active. This may cause the SPS to activate at a lower angle of attack (higher airspeed) than expected. The pilot should fly higher minimum airspeeds to avoid inadvertent activation of the SPS.

If the PUSH MODE FAIL Caution is displayed when either the prop heat or de-ice boots system is on, the Pusher Ice Mode schedule is incorrectly not active. This may cause the SPS to activate at a higher angle of attack (lower airspeed) than expected. The pilot should fly higher minimum airspeeds to avoid unprotected stalls.

3A.8.30 PUSHER OFF

PUSHER OFF

Condition:

- No power to the pusher servo.

1. PUSHER Circuit Breaker (**L-B-◄1**)..... RESET
   (maximum 1 time)

2. *If* PUSHER OFF *Warning persists:*
   a. Minimum Airspeed ..... FLAPS UP: 100 KIAS
   FLAPS T/O: 95 KIAS
   FLAPS FULL: 80 KIAS

WARNING

STALL PREVENTION IS NOT PROVIDED WITH THE PUSHER OFF. DO NOT DECELERATE BELOW 100 KIAS FLAPS UP, 95 KIAS FLAPS T/0, 80 KIAS FLAPS FULL.

3A.8.31 STALL CMP FAIL

L STALL CMP FAIL
R STALL CMP FAIL

Condition:

- Stall Prevention System fault.

1. PUSHER Circuit Breaker (**L-B-◄1**)..... PULL
2. Minimum Airspeed..... FLAPS UP: 100 KIAS
   FLAPS T/O: 95 KIAS
   FLAPS FULL: 80 KIAS

WARNING

STALL PREVENTION IS NOT PROVIDED WITH THE PUSHER CIRCUIT BREAKER PULLED. DO NOT DECELERATE BELOW 100 KIAS FLAPS UP, 95 KIAS FLAPS T/O, 80 KIAS FLAPS FULL.

CAUTION

If both stall computers have failed, GFC 700 Autopilot Underspeed Protection (USP) will not be provided in Altitude Critical Modes (ALT, GS, GP, T/O and GA).

3A.8.32 STALL HT FAIL

L STALL HT FAIL
R STALL HT FAIL

Conditions:

- PITOT STALL HT switched ON, and
- One or more stall heaters is failed on affected stall sensor

1. PITOT STALL HT Switch ..... OFF, THEN ON

2. *If* L STALL HT FAIL *Caution persists:*
   a. L STALL HEAT Circuit Breaker (**R-T-7►**) .....PULL
   b. SPS CMP 1A Circuit Breaker (**L-T-◄6**) .....PULL
   c. SPS CMP 1B Circuit Breaker (**L-B-◄10**).....PULL

3. *If* R STALL HT FAIL *Caution persists:*
   a. R STALL HEAT Circuit Breaker (**R-B-4►**).....PULL
   b. SPS CMP 2A Circuit Breaker (**L-T-◄5**) .....PULL
   c. SPS CMP 2B Circuit Breaker (**L-B-◄9**).....PULL

WARNING

A FROZEN STALL SENSOR MAY CAUSE ERRONEOUS INFORMATION TO THE STALL PREVENTION SYSTEM AND MAY CAUSE THE STICK PUSHER OR STICK SHAKER TO ACTIVATE ERRONEOUSLY.

WARNING

IF EITHER OF THE STALL PREVENTION SYSTEM COMPUTERS ARE DISABLED, STALL PREVENTION (I.E. PUSHER) IS NOT PROVIDED. IF BOTH STALL PREVENTION SYSTEM COMPUTERS ARE DISABLED STALL WARNING (I.E. SHAKER) IS ALSO NOT PROVIDED. DO NOT DECELERATE BELOW 100 KIAS FLAPS UP, 95 KIAS FLAPS T/0, 80 KIAS FLAPS FULL.

NOTE

The angle of attack indicator will be inoperative.

3A.8.33 STARTER ON

STARTER ON

Condition:
- The starter has been engaged for more than 60 seconds

1. GEN AMP Indicator .....CHECK
2. *If GEN AMP is negative:*
   a. STARTER GEN Switch .....OFF

3. Land as soon as practical.

CAUTION

THE HYDRAULIC SYSTEM MAY NOT PRESSURIZE AND MAY REQUIRE USE OF THE EMERGENCY LANDING GEAR EXTENSION SYSTEM. SEE LANDING GEAR FAILS TO EXTEND (3A.4.2).

NOTE

The open fuel purge circuit will return fuel to the left wing, which may trigger a FUEL IMBALANCE Caution. See FUEL IMBALANCE (3A.8.11).

3A.8.34 TRIM DISC

TRIM DISC

Condition:
- Trim system has been disconnected

❖ *IF TRIM SYSTEM STILL OPERATIVE AND DESIRED:*

1. TRIM RESET Button .....PRESS AND RELEASE

❖ *IF TRIM SYSTEM IS INOPERATIVE:*

1. Airspeed.....ADJUST TO RELIEVE FORCES

CAUTION

SIGNIFICANT FORCE ON THE CONTROL YOKE MAY BE REQUIRED AS AIRSPEED IS CHANGED.

3A.8.35 WSH HEAT ON

WSH HEAT ON

Conditions:
- WINDSH HEAT switch is ON, and
- OAT is greater than 5°C

3A.9 CAUTION (AMBER) CAS MESSAGES — ON GROUND

3A.9.1 BATT VOLTS LO — ON GROUND

BATT 1 VOLTS LO
BATT 2 VOLTS LO

Conditions:

- Battery voltage is below 25.0 V with engine running, or
- Battery voltage is below 24.2 V with engine not running

❖ *BEFORE START*

1. Charge batteries to 24.2 V or greater prior to attempting engine start.
2. Verify battery voltage without GPU.

❖ *AFTER START*

1. STARTER GEN Switch ..... ON
2. STBY ALTN Switch ..... ON
3. AIR COND Switch ..... OFF

3A.9.2 FLAPS FAIL — ON GROUND

FLAPS FAIL

1. Maintenance required before flight.

3A.9.3 GEAR MISCOMP — ON GROUND

GEAR MISCOMP

1. Maintenance required before flight.

3A.9.4 NITROGEN LOW — ON GROUND

NITROGEN LOW

1. N2PRES ..... CHECK

2. *If nitrogen pressure is less than 1500 PSI:*
   a. Flight must be conducted with landing gear down.

NOTE

Extended flight with gear down significantly decreases fuel efficiency and range.

3A.9.5 OXYGEN LOW — ON GROUND

OXYGEN LOW

1. Entire flight must be conducted at or below FL250, or the pilot must carry sufficient additional supplemental oxygen to provide for an emergency descent in the event of rapid depressurization in cruise.

NOTE
Oxygen quantity may be insufficient for a smoke event.

3A.9.6 PITOT HT FAIL — ON GROUND

L PITOT HT FAIL
R PITOT HT FAIL

1. PITOT STALL HT Switch.....OFF
2. Maintenance required before flight.

3A.9.7 PUSHER OFF — ON GROUND

PUSHER OFF

Condition:
- No power to the pusher servo

1. Maintenance required before flight.

3A.9.8 STALL CMP FAIL — ON GROUND

L STALL CMP FAIL
R STALL CMP FAIL

Condition:
- Stall Prevention System fault

1. Maintenance required before flight.

3A.9.9 STALL HT FAIL — ON GROUND

L STALL HT FAIL
R STALL HT FAIL

1. PITOT STALL HT Switch ..... OFF
2. Maintenance required before flight.

3A.9.10 STARTER ON — ON GROUND

STARTER ON

Condition:

- The starter has been engaged for more than 60 seconds

1. STARTER GEN Switch ..... OFF, THEN ON

2. *If* *STARTER ON* *Caution remains:*
   a. STARTER GEN Switch ..... OFF
   b. Perform SHUTDOWN (4.3.17).
   c. Maintenance required before flight.

This Page Intentionally Left Blank

SECTION 4

NORMAL PROCEDURES

TABLE OF CONTENTS

4.1 GENERAL 3
4.2 AIRSPEEDS FOR NORMAL OPERATION 3
4.3 NORMAL PROCEDURES 4
4.3.1 PREFLIGHT INSPECTION 4
4.3.2 BEFORE STARTING ENGINE 9
4.3.3 STARTING ENGINE 11
4.3.4 AFTER START/BEFORE TAXI 13
4.3.5 TAXI 14
4.3.6 BEFORE TAKEOFF 15
4.3.7 TAKEOFF 16
4.3.8 CLIMB 17
4.3.9 CRUISE 18
4.3.10 DESCENT 19
4.3.11 BEFORE LANDING 19
4.3.12 LANDING 20
4.3.13 BALKED LANDING/GO-AROUND 21
4.3.14 AFTER LANDING 21
4.3.15 SHUTDOWN 22
4.4 SUPPLEMENTAL PROCEDURES 23
4.4.1 ENGINE IGNITER PROCEDURES 23
4.4.2 ENGINE INERTIAL SEPARATOR PROCEDURES 23
4.4.3 COLD WEATHER OPERATION 23
4.4.4 HIGH ALTITUDE OPERATION 24
4.4.5 UNPRESSURIZED FLIGHT 24
4.4.6 ENGINE COMPRESSOR STALLS 24
4.4.7 NOISE CHARACTERISTICS 25
4.5 ENVIRONMENT SUPPLEMENTAL PROCEDURES 26
4.5.1 FLIGHT WITH HEAVY PRECIPITATION 26
4.5.2 TAKEOFF OR LANDING ON RUNWAYS CONTAMINATED WITH MELTING OR UNTAMPED SNOW 26
4.5.3 TAKEOFF OR LANDING ON RUNWAYS THAT ARE ICY OR COVERED WITH TAMPED SNOW 27
4.6 ADVISORY (WHITE) CAS 28
4.6.1 AC ON 28
4.6.2 DOOR SEAL LOW 28
4.6.3 DE-ICE ON 28
4.6.4 ICE 28
4.6.5 IGNITER ON 28

4.6.6 INERT SEP OPEN 28
4.6.7 PAX OXYGEN ON 29
4.6.8 PUSHER ICE MODE 29
4.6.9 STARTER ON 29
4.6.10 WSH HEAT ON 29

4.1 GENERAL

This section provides normal, amplified, and environmental operating procedures for normal operation of the airplane. Refer to Section 9, Supplements, for normal procedures provided by optional equipment manufacturers or other indicated systems.

4.2 AIRSPEEDS FOR NORMAL OPERATION

Airspeeds for normal operations are listed below. Unless otherwise noted, all airspeeds are based on a maximum takeoff weight of 8,000 lb (3628 kg) at sea level under ISA standard day conditions.

Rotate (V_R):
Normal Takeoff – Flaps T/O and UP ..... 90 KIAS

Takeoff @ 50 Foot Obstacle (Gear UP):
Normal Climb-Out – Flaps T/O ..... 105 KIAS
Normal Climb-Out – Flaps UP ..... 108 KIAS

Best Angle Climb (V_X):
Best Angle Climb (V_X) ..... 116 KIAS

Climb (Flaps UP):
Best Rate Climb (V_Y) – (S.L.) ..... 150 KIAS
Best Rate Climb (V_Y) – (FL240) ..... 140 KIAS
Enroute Climb ..... 150 - 180 KIAS

Approach to Landing (V_{REF}):
(based on Maximum Landing Weight of 7600 lb (3447 kg))
Approach – Flaps UP ..... 115 KIAS
Approach – Flaps T/O ..... 110 KIAS
Approach – Flaps FULL ..... 95 KIAS

Balked Landing (Go-Around):
Takeoff Power, Gear Up, Flaps T/O: ..... 120 KIAS

Maximum Recommended Turbulent Air Penetration Speed:
All Weights ..... 170 KIAS

Maximum Demonstrated Crosswind for Takeoff and Landing:
Flaps UP ..... 15 KTS
Flaps T/O ..... 15 KTS
Flaps FULL (landing only) ..... 15 KTS

4.3 NORMAL PROCEDURES

4.3.1 PREFLIGHT INSPECTION

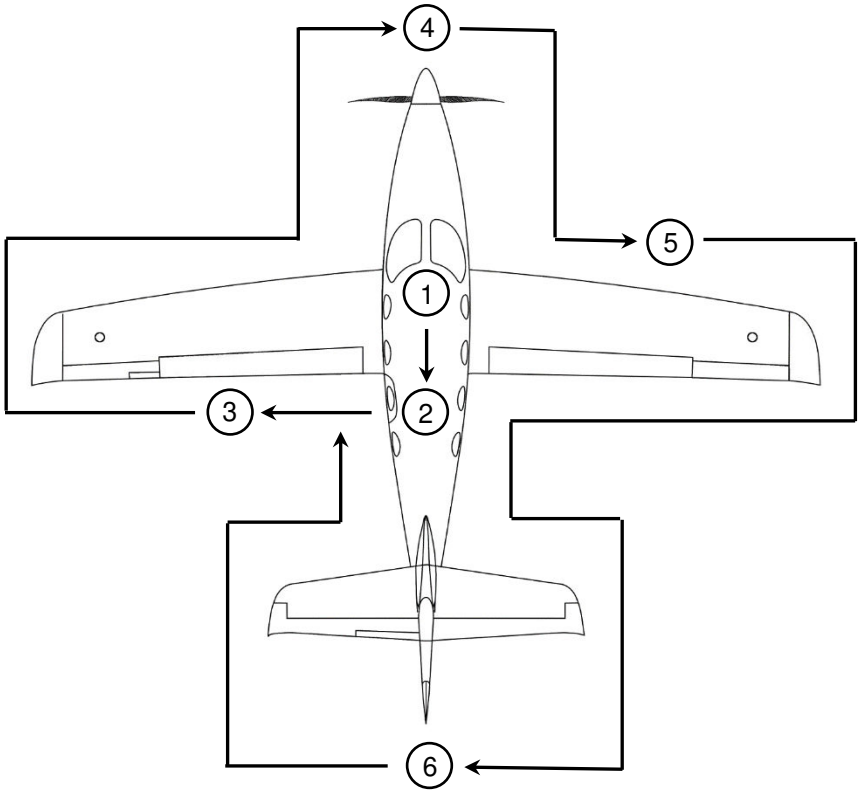

Area ①: Cockpit

1. Required Documents ..... ONBOARD
2. Fire Extinguisher ..... PRESSURE & SECURITY
3. Landing Gear Emergency Valve ..... DOWN, DOOR CLOSED
4. Fuel Selector ..... RIGHT TANK
5. MAN OVRD Lever ..... STOWED
6. POWER Lever ..... IDLE

CAUTION

TO PREVENT DAMAGE TO ENGINE CONTROLS, DO NOT MOVE THE POWER LEVER AFT OF THE IDLE GATE WITH ENGINE NOT RUNNING.

7. PROP Lever ..... FEATHER
8. COND Lever ..... FUEL CUTOFF
9. Circuit Breakers ..... IN

CAUTION

DO NOT RESET ANY OPEN CIRCUIT BREAKERS WITHOUT CHECKING WITH MAINTENANCE.

10. ELT ..... ARMED
11. Landing Gear ..... DOWN

12. All Electrical Switches.....OFF
13. BATT 1 & BATT 2 Switches ..... ON
14. BATT 1 & BATT 2 Voltages.....24.2 V MIN.

NOTE

If battery voltage is below 24.5 V or oil temperature is below 5°C (+41°F), a GPU assisted start is recommended.

15. Flaps .....T/O
16. Fuel Quantity .....NOTE
17. Fuel-On-Board Totalizer..... FOB SYNC
18. Nitrogen Quantity..... 1710 PSI MIN
19. Oxygen Quantity.....AS REQUIRED (1500 PSI AT 21°C)
20. Crew Oxygen Masks .....TEST
    a. OXYGEN BOTTLE Switch ..... ON
    b. PRESS TO TEST Button on each mask..... PRESS
    c. Oxygen flow .....VERIFY
    d. OXYGEN BOTTLE SWITCH ..... OFF
21. LAMP TEST Switch.....PRESS, CHECK, RELEASE
22. PITOT STALL HT Switch .....ON, WAIT 15 SECS, OFF
23. External Lights..... ON, CHECK, OFF
24. BATT 1 & BATT 2 Switches .....OFF

Area ②: Cabin

1. Seats and Seat Belts..... CONDITION & SECURITY
2. Windows ..... CONDITION
3. Emergency Exit.....LATCHED, LOCK PIN REMOVED

Area ③: Left Wing

1. Flap..... CONDITION & SECURITY
2. Aileron..... CONDITION & SECURITY
3. Aileron Trim Tab..... CONDITION & SECURITY
4. Aileron Turbulators (20)..... CONDITION & SECURITY
5. Static Wicks (2)..... CONDITION & SECURITY
6. Fuel Tank Vent .....CLEAR
7. Wing Tip, Lens, Lights..... CONDITION
8. Pitot Tube .....CLEAR
9. Fuel Quantity ..... CHECK VISUALLY
10. Fuel Filler Cap ..... CONDITION & SECURITY
11. De-Ice Boot..... CONDITION & SECURITY
12. Leading Edge Turbulators (6)..... CONDITION & SECURITY
13. SPS Lift Transducer .....CONDITION & MOVEMENT
14. Leading Edge Stall Strips (2)..... CONDITION & SECURITY
15. Lower Wing Surface ..... CONDITION
16. Lower Wing Vortex Generators (6) ..... CONDITION & SECURITY
17. OAT Probes..... CONDITION
18. Fuel Tank Sump .....SAMPLE FUEL
19. Main Gear Assembly and Tire..... CONDITION

Area ④: Forward Fuselage / Nose

1. Left Inertial Separator Exit.....CLEAR
2. Left Intercooler Inlet.....CLEAR
3. Engine Oil Level .....ABOVE MIN.
4. Left Exhaust Stack .....CONDITION
5. Engine Cowling (Left Side) .....SECURITY
6. Air Inlet .....CLEAR
7. Oil Cooler Inlet.....CLEAR
8. Propeller/Spinner..... CHECK
9. Nose Gear Assembly and Tire.....CONDITION
10. Engine Cowling (Right Side) .....SECURITY
11. Right Exhaust Stack.....CONDITION
12. Right Intercooler Inlet .....CLEAR
13. Right Inertial Separator Exit .....CLEAR

Area ⑤: Right Wing

1. Main Gear Assembly and Tire .....CONDITION
2. Hydraulic Fluid Quantity .....ABOVE MIN.
3. Fuel Tank Sump.....SAMPLE FUEL
4. Lower Wing Vortex Generators (6) .....CONDITION & SECURITY
5. Lower Wing Surface.....CONDITION
6. Leading Edge Stall Strips (2) .....CONDITION & SECURITY
7. SPS Lift Transducer .....CONDITION & MOVEMENT
8. Leading Edge Turbulators (6) .....CONDITION & SECURITY
9. De-Ice Boot .....CONDITION & SECURITY
10. Fuel Quantity .....CHECK VISUALLY
11. Fuel Filler Cap.....CONDITION & SECURITY
12. Pitot Tube .....CLEAR
13. Wing Tip, Lens, Lights.....CONDITION
14. Fuel Tank Vent.....CLEAR
15. Static Wicks (2) .....CONDITION & SECURITY
16. Aileron Turbulators (20) .....CONDITION & SECURITY
17. Aileron .....CONDITION & SECURITY
18. Flap.....CONDITION & SECURITY

Area ⑥: Rear Fuselage / Empennage

1. Emergency Exit .....SECURITY
2. Right Static Ports.....CONDITION & CLEAR
3. Air Conditioner Drain.....CLEAR
4. Air Conditioner Inlet.....CLEAR
5. Right Horizontal De-Ice Boot .....CONDITION & SECURITY
6. Right Elevator.....CONDITION & SECURITY
7. Right Elevator Static Wicks (2) ..... CONDITION & SECURITY
8. Rudder and Trim Tab.....CONDITION & SECURITY
9. Rudder Static Wicks (2) ..... CONDITION & SECURITY
10. Left Elevator and Trim Tab .....CONDITION & SECURITY
11. Left Elevator Static Wicks (2)..... CONDITION & SECURITY
12. Left Horizontal De-Ice Boot.....CONDITION & SECURITY
13. Air Conditioner Exhaust .....CLEAR
14. Left Static Ports.....CONDITION & CLEAR
15. Antennas .....CONDITION & SECURITY
16. Main Entry Door Seals .....CONDITION
17. Main Entry, Door, and Latches .....CONDITION

Amplification

A thorough inspection of the airplane is recommended, especially if it was in long term storage, has recently undergone maintenance, or has been flown from unimproved airfields.

Before carrying out a preflight inspection, ensure that all required maintenance has been accomplished, review your flight plan, and compute weight and balance. Remove pitot tube covers, inlet covers, exhaust stack covers, and propeller tie-downs. Stow them appropriately.

Required documents:

- Pilot's Operating Handbook and FAA Approved Flight Manual
- Garmin G1000 NXi Cockpit Reference Guide
- L3 Avionics ESI-500 Electronic Standby Instrument System Pilot's Guide

The fuel totalizer derives the current fuel remaining based on fuel flow from the time it is initialized. To increase redundancy between the fuel indicating systems, when possible, initialize the fuel totalizer to the quantity of fuel known to be in the tanks based on visual inspection (e.g., full tanks), or incrementally by the amount of fuel recently added.

CAUTION

REPEATED INCREMENTAL INITIALIZATION OF THE FUEL TOTALIZER MAY ACCUMULATE ERRORS IN THE DISPLAYED AMOUNT OF FUEL REMAINING.

Prior to high-altitude flights, pay particular attention to the condition of oxygen masks and hose connections and the quantity of oxygen. The oxygen system should be checked for functionality and supply prior to flight.

Prior to all flights in RVSM airspace, the airplane skin surface within 12 inches surrounding the static ports (RVSM Critical Region) must be inspected (on both the left and right sides of the airframe) for obvious damage or deformation, perhaps due to foreign objects, service vehicles, etc. The static port surface shall remain free of paint. The static ports must be inspected for abnormal elongation, deformation, and/or obstruction. Ensure that no foreign matter is found within the static pressure orifices.

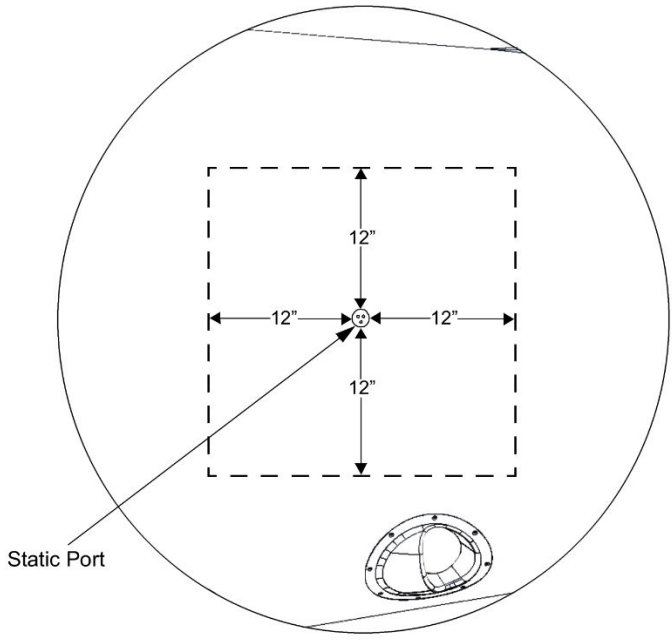

RVSM Critical Area
Left side shown, right side opposite.

Throughout the external inspection, check all fairings, hinges, hinge pins, nuts, bolts, and cotter pins for security. Check skin for damage, condition, and evidence of delamination. Check all control surfaces for proper movement. Check areas around liquid reservoirs and lines for evidence of leaking.

.

WARNING

THE PITOT PROBES AND THE LIFT TRANSDUCERS CAN RAPIDLY BECOME VERY HOT.

Avoid damaging the de-ice boots when fueling the airplane. A protective apron should be used if possible.

After major maintenance, the flight controls and trim tabs should have free and correct movement and be securely attached. Following any maintenance, the security of all inspection plates on the wings, fuselage, and tail surfaces should be checked for dents and scratches, as well as external lights and antennas checked for damage. In windy or gusty areas, or when stored next to taxiing airplanes, control surface stops, hinges, and brackets should be checked to detect wind damage.

Verify the fuel tank filler caps are tightly sealed after any fueling or inspection. Fuel vents should also be verified clear of obstructions, ice or water, especially after exposure to wet weather.

If there is water in fuel system, drain it carefully using the two drain valves until every trace of water or contamination has been removed.

Long term storage of the airplane causes water accumulation in fuel. The accumulated water absorbs fuel additives decreasing their effectiveness. Refer to Section 8 for servicing procedures relative to fuel additives.

Improperly serviced or worn struts and dampers may result in excessive load transmission to the airplane structure during ground operations.

Propeller damage may reduce blade life and degrade performance. Any propeller damage should be referred to maintenance personnel.

4.3.2 BEFORE STARTING ENGINE

1. Preflight Inspection ..... COMPLETE
2. Baggage ..... STOWED & SECURE
3. Passenger Briefing ..... COMPLETE
4. Main Entry Door ..... CLOSED & LATCHED
5. Seats ..... AS REQUIRED
6. All Occupants ..... SEATED WITH SEATBELTS SECURE
7. Glare Shield ..... STOWED
8. MAN OVRD Lever ..... STOWED
9. POWER Lever ..... IDLE

CAUTION

TO PREVENT DAMAGE TO ENGINE CONTROLS, DO NOT MOVE THE POWER LEVER AFT OF THE IDLE GATE WITH ENGINE NOT RUNNING.

10. PROP Lever ..... FEATHER
11. COND Lever ..... FUEL CUTOFF
12. Climate Controls ..... AS REQUIRED
13. LIGHTS and ICE Switches ..... MIN. REQUIRED
14. BATT 1 & BATT 2 Switches ..... ON
15. BATT 1 & BATT 2 Voltages ..... 24.2 V MINIMUM

16. *If using GPU:*
    a. GPU ..... CONNECT, ON
    b. BATT 1 Switch ..... OFF, THEN ON
    c. BATT 1 & BATT 2 Voltages ..... VERIFY INCREASE

17. Fuel-On-Board Totalizer ..... FOB SYNC

Amplification

It is the responsibility of the pilot in command to make sure that the airplane is correctly loaded within the weight and center of gravity limits prior to takeoff.

The required seat positions for taxi, takeoff, and landing are:

- All seatbacks in the upright position,
- Crew seat height set according to 7.3.6.2 CREW EYE REFERENCE HEIGHT, and
- Copilot seat in the full forward position if unoccupied.

WARNING

FAILURE TO CORRECTLY USE SEAT BELTS AND SHOULDER HARNESSES COULD RESULT IN SERIOUS OR FATAL INJURY IN THE EVENT OF AN ACCIDENT.

CAUTION

ENSURE THE MAN OVRD LEVER IS STOWED TO AVOID THE RISK OF OVER TEMPERATURE AT START.

When setting electrical switches prior to engine start, common practice is for the interior lights to be sufficient to illuminate the cockpit controls and switches, the navigation lights to be on with power (battery or GPU) and the anti-collision lights (strobes) to be turned on just before starting the engine. All other switches, including anti-ice, de-ice, ventilation fans, and air conditioning, should be turned off.

All PRE-TAXI and SYSTEMS switches, including PRESS AIR and STBY ALTN should be off during engine start.

CAUTION

LEAVING THE PRESS AIR SWITCH IN THE “ON” POSITION CAN RESULT IN A HOT START OR ABNORMAL ACCELERATION TO IDLE.

The use of a GPU is recommended when:

- The battery voltage is lower than 24.5V.
- Oil temperature below 5°C (+41°F).
- In cold weather when the airplane has been parked for more than 3 hours at a temperature below -10°C (+14°F).

If using a GPU, ensure it provides a 28-volt regulated voltage with negative on ground as well as supplying 800 amperes minimum and 1,000 amperes maximum. Refer to the placard near the ground power receptacle door.

CAUTION

VOLTAGE OF APPROXIMATELY 24.5V AFTER CONNECTING THE GPU MAY INDICATE THAT ONLY THE BATTERY IS POWERING THE AIRPLANE AND NOT THE GPU AND BATTERY TOGETHER. ENSURE A GPU IS CONNECTED AND POWERING THE AIRPLANE.

4.3.3 STARTING ENGINE

1. Exterior Lights.....AS REQUIRED
2. Propeller Area.....CLEAR
3. FUEL TANK SELECTOR Knob..... RIGHT
4. L FUEL PUMP Switch .....ON, 0 PSIG MAXIMUM
5. R FUEL PUMP Switch.....ON, 5 PSIG MINIMUM
6. FUEL TANK SELECTOR Knob.....LEFT, 5 PSIG MINIMUM
7. IGNITER Switch ..... ON
8. STARTER GEN Switch ..... ON
9. START Switch .....PRESS & RELEASE
   a. Oil Pressure .....VERIFY RISE
   b. N_G .....12% MINIMUM

10. *If oil pressure does not rise or N_G does not reach minimum speed:*
    a. DISCONTINUE ENGINE START (3.4.1).

11. COND Lever .....LOW
12. FUEL FLOW Indicator .....CHECK POSITIVE
13. ITT.....MONITOR
    (870–1,000°C limited to 5 sec. 850–870°C limited to 20 sec.)

14. *If no light-off in 10 seconds or a rapid increase of ITT towards 1,000°C:*
    a. DISCONTINUE ENGINE START (3.4.1).

15. N_G..... VERIFY STABLE ABOVE 51%

16. *If N_G stabilizes below 51% or ITT at idle approaches 750°C:*
    a. COND Lever .....HIGH
    b. ITT .....MONITOR

17. Engine Instruments.....NORMAL
18. GEN AMP Indicator .....VERIFY POSITIVE

19. *If GEN AMP indicator is not positive:*
    a. DISCONTINUE ENGINE START (3.4.1).

20. GPU (if applicable) ..... OFF, DISCONNECT
21. BATT 1 & BATT 2 Voltages.....26 V MINIMUM

Amplification

The engine start cycle occurs in three phases: spool-up, light-off, and accelerate-to-idle. Normally, a balance of air and fuel is maintained throughout the process to keep temperatures under control.

NOTE

Use of the starter is governed by the limitations defined in Section 2.4.1 STARTER.

During spool-up, the gas generator starts spinning and moving air through the combustion chamber. The voltage at the starter/generator should remain at or above 18V, and the starter/generator should accelerate N_G a minimum of 1 percent per second. If the voltage-drop or turbine acceleration during spool-up begin to approach these numbers, check the capacity of the batteries.

Once the oil pressure has been verified and the gas generator (N_G) has achieved a sufficient speed (12%), light-off is achieved by setting the COND lever to LOW or HIGH which introduces fuel to the combustion chambers to be lit by the igniters.

CAUTION

TURNING ON THE IGNITERS AFTER INTRODUCING FUEL IS LIKELY TO CAUSE A TEMPERATURE EXCEEDANCE AND DAMAGE THE ENGINE.

NOTE

COLD START (oil temp below 5°C) - Set COND Lever to HIGH as soon as N_G is above 12%. Set COND Lever to LOW when N_G is above 51%.

WARM START (ITT above 130°C) - After N_G has stabilized, wait until ITT approaches 130° C before COND Lever is set to LOW.

Initial light-off occurs with fuel flowing through the primary nozzles. As the engine accelerates through approximately 35% N_G, secondary nozzles open to provide more fuel to the engine. Expect an increase in ITT as the secondary nozzles open. Rapid acceleration through 35% N_G suggests a start with the secondary nozzles already open, in which case, anticipate a hot start.

During the final phase of starting, the engine accelerates to the selected idle speed. The starter disengages at approximately 50% N_G. The generator will shortly thereafter come online once it can produce a voltage higher than the output of the batteries.

CAUTION

IF THE FRICTION IS NOT SET TIGHT ENOUGH, THE PROPELLER LEVER MAY INADVERTENTLY CREEP FORWARD OUT OF FEATHER ON ENGINE START AND CAUSE THE AIRCRAFT TO MOVE FORWARD IF THE BRAKES ARE NOT HELD FIRM.

4.3.4 AFTER START/BEFORE TAXI

1. IGNITER Switch ..... AUTO
2. PRE-TAXI Switches ..... ALL ON
3. Climate Controls ..... AS REQUIRED
4. Autopilot ..... TEST
   a. AFCS Preflight Test ..... COMPLETE
   b. Flight Controls ..... FREE & CORRECT
   c. AP Switch ..... PRESS
   d. Flight Controls ..... RESTRICTED & OVERRIDABLE
   e. AP/TRIM DISC Switch ..... PRESS & RELEASE
   f. Warning Tone ..... VERIFY
5. Stall Prevention System ..... TEST
   a. STALL TEST Switch ..... PRESS & HOLD
   b. Flight Controls ..... VERIFY SHAKE & PUSH
   c. AP/TRIM DISC Switch ..... PRESS TO OVERRIDE
   d. STALL TEST Switch ..... RELEASE
   e. TRIM DISC Caution ..... CHECK ON
   f. TRIM RESET Switch ..... PRESS & RELEASE
   g. TRIM DISC Caution ..... CHECK CLEAR
6. Flight Controls ..... FREE & CORRECT
7. Avionics/Navigation ..... SET
8. Altimeters ..... SET
9. Transponder ..... AS REQUIRED
10. Landing Field Elevation ..... VERIFY/SET

Amplification

After turning on the standby alternator, the ALTERNATOR ON Caution may appear, depending on the charge level of the batteries. This is considered normal whenever the COND lever is set to LOW.

The GFC™ 700 autopilot pre-flight test is conducted automatically, and during the test a PFT advisory will be displayed on the PFD. Upon successful completion of the preflight test, the white PFT advisory will disappear. Failure of the pre-flight test will be indicated with an AFCS Warning.

Avionics and Navigation set up includes tuning COM and NAV radios, programming the route of flight into the FMS flight plan, and selecting the appropriate navigation source on the PFD CDI.

4.3.5 TAXI

1. PROP Lever ..... MAX RPM
2. COND Lever ..... HIGH
3. ALTN AMP Indicator ..... ZERO
4. Control Lever Friction ..... ADJUSTED
5. TAXI Light ..... ON
6. POWER Lever ..... AS REQUIRED
7. Brakes ..... CHECK
8. Nose Wheel Steering ..... CHECK
9. Flight Instruments ..... CHECK
10. Standby Instrument ..... AGREES WITH PFD

Amplification

POWER lever BETA range can be used during taxi to control taxi speed and improve brake life. When stopped, the POWER lever should be returned to the IDLE position (just forward of the gate) to improve air flow over the oil cooler and to reduce propeller blade erosion.

WARNING

STABILIZED GROUND OPERATION WITHIN THE PROPELLER RESTRICTED RPM RANGE (400-900 RPM) CAN GENERATE HIGH PROPELLER STRESSES AND RESULT IN PROPELLER FAILURE, AND LOSS OF CONTROL OF THE AIRPLANE.

CAUTION

THE USE OF REVERSE THRUST SHOULD BE MINIMIZED, ESPECIALLY ON UNPREPARED SURFACES, TO MINIMIZE PROPELLER BLADE EROSION AND POSSIBLE DAMAGE.

NOTE

During low-speed taxi with a strong tailwind, or when stopped with a strong tailwind, a moderate vibration can occur as a result of reverse airflow through the propeller disk with the blades at a positive pitch angle. This vibration can be significantly reduced by placing the POWER lever in the BETA range, or it can be eliminated by turning the airplane into the wind.

NOTE

Strong quartering tail winds require caution. Avoid excessive use of power and sharp braking when the airplane is in this condition. Use the steerable nose wheel and rudder to maintain direction.

During ground turns, verify operation of attitude, slip-skid, heading, and rate-of-turn indicators on PFD1, PFD2, and the Standby Instrument.

4.3.6 BEFORE TAKEOFF

1. Propeller Overspeed Governor (first flight of day) .....TEST
   a. POWER Lever .....1700 RPM
   b. PROP GOV TEST Switch.....PRESS & HOLD
   c. N_P ..... VERIFY RPM DROP & STABLE
   d. POWER Lever .....IDLE
   e. PROP GOV TEST Switch.....RELEASE
2. Flight Controls..... FREE & CORRECT
3. Trims ..... SET FOR TAKEOFF
4. Flaps .....T/O
5. Engine Instruments..... NORMAL
6. Fuel Quantity, Balance ..... CHECK
7. Avionics / Navigation .....SET
8. PRE-TAXI Switches.....CHECK ON
9. SYSTEMS Switches .....CHECK OFF
10. PROP Lever.....MAX RPM
11. TO/GA Takeoff Check .....COMPLETE
    a. TO/GA Switch .....PRESS & HOLD
    b. TAKEOFF Annunciators ..... VERIFY ALL GREEN
    c. TO/GA Switch ..... RELEASE
12. Autopilot and Yaw Damper.....OFF

Before taking runway:

13. IGNITER Switch ..... ON
14. PITOT STALL HT Switch ..... ON
15. External Lights .....AS REQUIRED
16. CAS Messages..... NO RED OR AMBER MSGS

Amplification

Normal trim position for takeoff is as follows

Pitch Trim.....CENTER
Roll Trim.....CENTER
Rudder Trim..... FULL RIGHT

The FUEL AUTO SEL switch is normally ON for all flight operations. However, it can be turned OFF as required to manually balance the fuel load. As soon as the fuel load is balanced, FUEL AUTO SEL switch should be turned ON again.

CAUTION

DO NOT EXCEED 20 GALLONS FUEL IMBALANCE IN FLIGHT.

NOTE

To obtain accurate fuel quantity indicator readings, verify the airplane is parked in a laterally level condition, or, if in flight, make sure the airplane is in a coordinated and stabilized condition.

The PITOT STALL HT system should be on for all normal operations in flight.

4.3.7 TAKEOFF

1. Nose Wheel.....CENTERED & COUPLED
2. Brakes .....HOLD
3. POWER Lever.....MAXIMUM TAKEOFF POWER
4. Engine Instruments .....NORMAL
5. Brakes ..... RELEASE
6. Rotate .....90 KIAS
7. Initial Pitch Attitude.....12.5° UP
8. Vertical Speed Indicator ..... POSITIVE
9. Brakes ..... APPLY BRIEFLY
10. Landing Gear ..... UP
11. Flaps..... UP

Amplification

Refer to the Maximum Engine Torque for Takeoff chart in Section 5 to determine the torque corresponding to the surface altitude and OAT conditions. This torque should be obtainable without exceeding 850°C ITT or 104% Ng.

Ensure that the nose steering is centered and coupled as you line up for takeoff. Initiating a takeoff roll without the nose steering coupled will make it difficult to maintain runway centerline.

As engine power is brought up to MAXIMUM TAKEOFF POWER, if any amber or red CAS messages appear, abort the takeoff.

Landing gear is retracted when there is a positive rate of climb and no more runway is available for an immediate landing. Recommended minimum speed for flaps UP is 120 KIAS.

CROSSWIND TAKEOFF

Takeoff in strong crosswinds are performed using normal takeoff configuration and procedures.

4.3.8 CLIMB

1. Yaw Damper ..... AS REQUIRED
2. Best Rate of Climb Speed (V_Y, S.L. to FL240) ..... 150 KIAS
3. Best Rate of Climb Speed (V_Y, above FL240) ..... 140 KIAS
4. Cruise Climb Speed ..... 150 – 180 KIAS
5. POWER Lever ..... MAXIMUM CLIMB POWER
6. Engine Instruments ..... MONITOR
7. Pressurization ..... CHECK
8. IGNITER Switch ..... AUTO
9. External lights ..... AS REQUIRED
10. ICE Switches ..... AS REQUIRED

Amplification

Frequent trim changes may be required as the airplane accelerates to climb speed. The yaw damper (YD) may be engaged to assist with rudder trim changes.

Normally, maximum climb power is maintained during the climb to cruise altitude. Adjust the POWER lever as required to prevent exceeding Maximum Climb Torque found in Section 5, maximum climb ITT of 840°C, or maximum climb Ng of 104%, whichever occurs first.

As torque is reduced below 83.3% at high altitude according to the torque tables, ITT will remain approximately constant during the final climb, establishing a typical climb ITT value for the particular engine being operated. This typical climb ITT for a particular engine will increase over the life of the engine, reducing the margin between this indicated ITT and the maximum climb ITT limit of 840°C.

For simplified engine operation during climb, power may be set first by torque, using 83.3%, then to maintain ITT at or below the typical climb ITT value for the particular engine being operated.

The PROP Lever should remain full forward (1700 RPM) for climb.

CAUTION

5 MINUTES AFTER TAKEOFF, MAXIMUM CLIMB POWER RATING IS 1000 SHP (83.3% TQ @ 1700 RPM). MONITOR ENGINE PARAMETERS DURING CLIMB AND REDUCE POWER AS NECESSARY TO REMAIN WITHIN LIMITATIONS.

CAUTION

SET IGNITER AND INERT SEP SWITCHES TO “ON” IF THERE IS VISIBLE MOISTURE (CLOUDS, RAIN, ETC.) WITH AN OAT OF 5°C (41°F) OR LESS.

When operating near the ITT limit, advance POWER lever slowly to allow the current ITT to be indicated. The rate of power and temperature increase of the engine is faster than the response rate of the ITT indicating system; therefore, a rapid POWER lever advance could cause a momentary over-temperature condition in the engine before the over-temperature would be indicated.

For a maximum performance climb, Best Rate of Climb Speed is recommended during instrument departures.

The following cruise climb speeds provide improved visibility over the nose and increased passenger comfort:

Below 10,000 ft MSL .....180 KIAS
10,000 ft to FL200 MSL.....170 KIAS
FL200 to FL300 MSL .....160 KIAS
Above FL300 MSL .....150 KIAS

Pressurization should be monitored throughout the climb.

4.3.9 CRUISE

1. POWER Lever.....MAXIMUM CRUISE POWER OR LESS
2. Engine Instruments .....MONITOR
3. Pressurization.....MONITOR
4. Fuel Quantity, Balance.....MONITOR
5. ICE Switches .....AS REQUIRED

Amplification

Cruise is performed using any desired power setting up to the maximum cruise power (observe ITT, torque, and N_G cruise limits). Refer to cruise torque values in the cruise performance tables.

NOTE

Normal Cruise is recommended for engine longevity.

Do not exceed the maximum cruise torque or 840°C ITT shown in Cruise Performance charts in Section 5 for the particular altitude and temperature.

Propeller RPM may be reduced in order to provide for passenger comfort. Minimum recommended N_P in cruise is 1580 RPM.

CAUTION

SWITCH “IGNITER” AND “INERT SEP” TO “ON” IF THERE IS HEAVY PRECIPITATION.

4.3.10 DESCENT

1. POWER Lever ..... AS REQUIRED
2. Altimeters ..... SET
3. External Lights ..... AS REQUIRED
4. ICE Switches ..... AS REQUIRED
5. CLIMATE Controls ..... AS REQUIRED
6. Landing Field Elevation ..... SET

Amplification

Without pilot input, engine power will increase in the descent. Periodic reductions in the POWER Lever may be necessary to prevent exceeding torque, ITT, N_G and/or airspeed limitations.

4.3.11 BEFORE LANDING

Approach Check:

1. Seats ..... AS REQUIRED
2. All Occupants ..... SEATED WITH SEATBELTS SECURE
3. Glare Shield ..... STOWED
4. PROP Lever ..... MAX RPM
5. COND Lever ..... HIGH
6. IGNITER Switch ..... ON
7. Flaps ..... FULL (OR AS REQUIRED)
8. Landing Gear ..... DOWN

CAUTION

EXTENDING OR RETRACTING THE LANDING GEAR AT BANK ANGLES IN EXCESS OF 45 DEGREES IS PROHIBITED.

9. Brakes ..... CHECK PEDAL PRESSURE

Landing Check:

10. Cabin ..... DEPRESSURIZED
11. Autopilot and Yaw Damper ..... OFF
12. Final Approach Airspeed ..... FLAPS UP: 115 KIAS
    FLAPS T/O: 110 KIAS
    FLAPS FULL: 95 KIAS

Amplification

The required seat positions for taxi, takeoff, and landing are:

- All seatbacks in the upright position,
- Crew seat height set according to 7.3.6.2 CREW EYE REFERENCE HEIGHT, and
- Copilot seat in the full forward position if unoccupied.

Normal landings are accomplished with FLAPS in the FULL position to minimize touchdown speed and subsequent need for braking.

Landing with FLAPS in the T/O position may be performed to maintain a stabilized approach during low instrument meteorological conditions.

Landing with FLAPS in the UP position should be reserved for abnormal situations (e.g., landing with ice) or training purposes.

During landing gear extension, the *HYD PRESS* Caution illuminates if the pump is in the pressurizing mode (versus the re-circulation mode) for more than 20 seconds. This CAS Caution extinguishes when the pressure switch setting is reached (the system is then pressurized and the pump enters circulation mode).

After extending the landing gear, pump the brake pedals to ensure they remain firm. Any softness, fade, or collapse indicates a hydraulic failure of the brakes.

To ensure positive and rapid engine response to throttle movement a minimum of 10% torque on final approach is recommended until landing is assured.

4.3.12 LANDING

1. POWER Lever..... IDLE

After touchdown:
2. POWER Lever.....GROUND FINE, REVERSE AS DESIRED
3. Brakes .....AS REQUIRED

Amplification

Touchdown should be made with idle power and on the main wheels first. The nose wheel is then gently lowered to the runway, and the POWER lever repositioned to ground fine (just aft of the lift gate), and then reverse, with brakes applied as required.

CAUTION

USE OF REVERSE BELOW 40 KIAS IS NOT RECOMMENDED ON A SNOWY OR CONTAMINATED RUNWAY.

Clearing the runway, reposition the POWER lever to the ground fine position (just aft of the lift gate for zero-thrust or slightly forward-thrust) position in the BETA range. This will reduce braking requirements during taxi.

Short field landings are performed by applying maximum reverse and braking after touchdown. Exercise caution to avoid skidding the tires with heavy braking.

CROSSWIND LANDING

Just before the round out (flare) is started, transition to a wing-low (sideslip) attitude to keep the airplane's ground track and longitudinal axis aligned with the runway centerline throughout the round out, touchdown, and after-landing roll.

If you cannot align the airplane with the runway with full rudder in the sideslip, the wind is too strong to safely land the airplane on that particular runway with those wind conditions.

Touch down with zero sideward motion and on the upwind main wheel to avoid imposing damaging side loads on the landing gear. Center the rudder pedals just before the nose wheel touches down.

As the airplane decelerates in the after-landing roll, maintain directional control with rudder and nose-wheel steering, and apply full aileron into the wind to prevent the upwind wing from rising.

4.3.13 BALKED LANDING/GO-AROUND

1. AP/TRIM DISC Switch ..... PRESS & RELEASE
2. TO/GA Switch ..... PRESS & RELEASE
3. POWER Lever ..... MAXIMUM TAKEOFF POWER
4. Pitch Attitude ..... 7.5°
5. Vertical Speed Indicator ..... POSITIVE
6. Flaps ..... T/O
7. Landing Gear ..... UP
8. Flaps ..... AS REQUIRED

CAUTION

A RAPID INCREASE IN POWER MAY CAUSE SIGNIFICANT PITCHING AND YAWING MOMENTS. APPLY POWER SMOOTHLY WHILE MAINTAINING POSITIVE CONTROL OF THE AIRPLANE.

Amplification

Landing gear is retracted when there is a positive rate of climb. Recommended minimum speed for flaps UP is 120 KIAS.

4.3.14 AFTER LANDING

1. Flaps ..... UP
2. ICE Switches ..... AS REQUIRED
3. External Lights ..... AS REQUIRED
4. IGNITER Switch ..... AUTO
5. PRE-TAXI Switches ..... ALL OFF
6. Cool-down Timer ..... START
7. Trims ..... SET FOR TAKEOFF

4.3.15 SHUTDOWN

1. POWER Lever ..... IDLE
2. COND Lever ..... LOW
3. PROP Lever ..... FEATHER
4. Climate Controls ..... AS REQUIRED
5. External & Internal Lights ..... AS REQUIRED
6. Engine Cooldown ..... COMPLETE
   a. 60 seconds since touchdown, and
   b. 30 seconds since propeller feathered.
7. COND Lever ..... FUEL CUTOFF
8. STARTER GEN Switch ..... OFF

After N_G is below 10%:

9. L & R FUEL PUMP Switches ..... OFF
10. BATT 1 & BATT 2 Switches ..... OFF

CAUTION

TO PREVENT GROUND WINDMILLING WITH THE ENGINE NOT RUNNING (W/O OIL PRESSURE), THE PROPELLER SHOULD BE RESTRAINED USING PROPELLER STAYS.

Amplification

Use inlet/outlet covers when the airplane is stored outside.

4.4 SUPPLEMENTAL PROCEDURES

4.4.1 ENGINE IGNITER PROCEDURES

For most operations, the IGNITER switch is left in the AUTO position. With the switch in this position, the igniters are on when engine torque is below 20% and the airplane is in flight (no weight on wheels).

The IGNITER should be switched ON to provide continuous ignition under the following conditions:

- Operation on wet or contaminated runways.
- Flight in heavy precipitation.
- Flight in moderate or greater turbulence.
- During inadvertent icing encounters prior to the INERT SEP being selected to ON.
- When near fuel exhaustion as indicated with a L/R FUEL LOW Caution.

Refer to Section 7.7.7 IGNITION for further details regarding the ignition system.

4.4.2 ENGINE INERTIAL SEPARATOR PROCEDURES

An inertial separator system is built into the engine air inlet duct to prevent ice buildups on the compressor inlet screen. The INERT SEP switch should be set to the ON position prior to flight operation in visible moisture (clouds, rain, snow or ice crystals) with an OAT of +5°C (41°F) or less.

The OFF position is used for all other operating conditions, since it provides substantial inlet ram recovery. This results in more efficient engine operation and higher performance.

Engine performance is affected depending upon the position of the inertial separator due to its influence on engine parameters, especially TRQ and ITT. Use caution when operating the inertial separator or when increasing power with the inertial separator ON to avoid exceeding engine limitations.

Refer to Section 7.7.8 ENGINE AIRFLOW AND COMBUSTION for further details regarding the inertial separator.

4.4.3 COLD WEATHER OPERATION

Special consideration should be given to the operation of the airplane fuel system during the winter season or prior to any flight in cold temperatures. Proper preflight draining of the fuel system is especially important and will eliminate any free water accumulation.

The use of a fuel additive is required for anti-ice protection. Refer to Section 8 for information on the proper use of additives.

Cold weather often causes conditions which require special care prior to flight. Operating the elevator and aileron trim tabs through their full travel in both directions will assure smooth operation by reducing any stiffness in these systems caused by the cold weather effects on system lubrication.

Even small accumulations of frost, ice, snow or slush must be removed, particularly from wing, tail and all control surfaces to assure satisfactory flight performance and handling. Also, control surfaces must be free of any internal accumulations of ice or snow.

The use of an external pre-heater reduces wear and abuse to the engine and the electrical system. Pre-heat will lower the viscosity of the oil trapped in the oil cooler, prior to starting in extremely cold temperatures.

If using a GPU, ensure it provides a 28-volt regulated voltage with negative on ground as well as supplying 800 amperes minimum and 1,000 amperes maximum. Refer to the placard near the ground power receptacle door.

If snow or slush covers the takeoff surface, allowance must be made for takeoff distances which will be increasingly extended as the snow or slush depth increases. The depth and consistency of this cover can, in fact, prevent takeoff in some instances.

4.4.4 HIGH ALTITUDE OPERATION

At altitudes above FL200, a compressor surge can be experienced if engine power is rapidly re-applied immediately after a power reduction. This characteristic is not detrimental to the engine and can be eliminated completely by using HI PRESS AIR.

4.4.5 UNPRESSURIZED FLIGHT

When conducting flight with the pressurization system turned off or otherwise disabled, pilots should operate below 14,000 ft pressure altitude so as to avoid inadvertently deploying the passenger oxygen masks.

4.4.6 ENGINE COMPRESSOR STALLS

An engine compressor stall can be noted by a single or multiple loud popping noise from the engine compartment and an increase in ITT. This situation can be resolved by reducing the engine power to a point where the "popping" discontinues, and slowly advancing the throttle to the necessary setting for continued flight. The use of HI PRESS AIR can also help eliminate engine compressor stalls if this situation is encountered.

4.4.7 NOISE CHARACTERISTICS

Increased emphasis on improving the quality of our environment requires renewed effort on the part of all pilots to minimize the effect of airplane noise on the public.

We, as pilots, can demonstrate our concern for environmental improvement, by application of the following suggested procedures, and thereby tend to build public support for aviation:

- Pilots operating airplane under VFR over outdoor assemblies of persons, recreational and park areas, and other noise-sensitive areas should make every effort to fly not less than 2,000 feet above the surface, weather permitting, even though flight at a lower level can be consistent with the provisions of government regulations.
- During departure from or approach to an airport, climb after takeoff and descent for landing should be made so as to avoid prolonged flight at low altitude near noise-sensitive areas.

NOTE

The above recommended procedures do not apply where they would conflict with Air Traffic Control clearances or instructions, or where, in the pilot's judgment, an altitude of less than 2,000 feet is necessary to adequately exercise the pilot’s duty to see and avoid other airplanes.

The corrected takeoff noise level of this airplane, established in compliance with 14 CFR Part 36, Appendix G (Amdt 36-30), is 77.3 dB as determined by flight tests. No determination has been made by the Federal Aviation Administration that the noise levels of this airplane are or should be acceptable or unacceptable for operation at, into, or out of, any airport.

The above statement notwithstanding, the noise level stated above has been verified by and approved by the Federal Aviation Administration in noise level test flights conducted in accordance with 14 CFR Part 36, Appendix G, Amendment 30, Noise Standards: Airplane Type and Airworthiness Certification. The airplane noise is in compliance with all 14 CFR Part 36 noise standards applicable to this type.

4.5 ENVIRONMENT SUPPLEMENTAL PROCEDURES

4.5.1 FLIGHT WITH HEAVY PRECIPITATION

1. IGNITER Switch .....ON

NOTE

This action is intended to ensure immediate restarting without action from the pilot in the highly improbable occurrence of an engine flame-out due to an ingestion of heavy precipitation.

2. INERT SEP Switch.....ON

4.5.2 TAKEOFF OR LANDING ON RUNWAYS CONTAMINATED WITH MELTING OR UNTAMPED SNOW

❖ *PREFLIGHT INSPECTION*

1. Remove any snow or ice from the wings, stabilizers and movable surfaces, landing gear wells and gear doors, as well as flap hinges, actuators and their fairings.
2. Spray anti-icing fluid on the wings, stabilizers and movable surfaces (upper and lower surfaces) and in the landing gear wells, shortly before takeoff.

❖ *TAXIING*

1. Taxi at very slow speed (5 KIAS maximum), flaps up, brake occasionally to keep the brake pads warm which will prevent locking due to freezing after takeoff.

❖ *BEFORE TAKEOFF*

1. If the runway is long enough, perform takeoff with the flaps in the UP position. Consult the Flaps UP Takeoff Performance charts.

NOTE

The ground roll may be multiplied by 3 in some melting or untamped snow situations.

❖ *TAKEOFF*

1. Lightly lift up the nose wheel during takeoff in order to reduce the forward resistance due to snow accumulation.
2. After takeoff, normally retract the landing gear then perform a complete cycle (extension and retraction) at IAS less than or equal to 150 KIAS.

❖ *ON THE RAMP, AFTER LANDING OR TAXIING:*

1. Use wheel chocks and/or tie-down the airplane.

4.5.3 TAKEOFF OR LANDING ON RUNWAYS THAT ARE ICY OR COVERED WITH TAMPED SNOW

❖ *PREFLIGHT INSPECTION*

1. Remove any snow or ice from the wings, stabilizers, movable surfaces, landing gear wells, gear doors, flap tracks, and actuators and their fairings.
2. Spray anti-icing fluid on the wings, stabilizers, movable surfaces (upper and lower surfaces) immediately before takeoff.

❖ *TAXIING*

1. Taxi at very slow speed (5 KIAS maximum). Use ground fine area of throttle to adjust speed; avoid the use of reverse. Apply very smooth adjustments using the throttle.
2. Steer the airplane using the rudder. Make turns at a very low speed. Engine torque tends to make the airplane turn to the left.
3. Use brakes only at very low speed and progressively.

❖ *TAKEOFF*

1. After takeoff, normally retract the landing gear then perform a complete cycle (extension and retraction) at IAS less than or equal to 150 KIAS.

❖ *LANDING, AFTER TOUCHDOWN:*

1. Use reverse only as necessary and very progressively by monitoring the airplane behavior.
2. Taxi at very slow speed (5 knots maximum). Use ground fine area of throttle to adjust speed. Apply very smooth adjustments using the throttle.
3. Steer the airplane using the rudder.
4. Make turns at a very low speed. Engine torque tends to make the airplane turn to the left.
5. Use brakes only at very low speed and progressively.

❖ *ON THE RAMP, AFTER LANDING OR TAXIING:*

1. Use wheel chocks and/or tie-down the airplane.

4.6 ADVISORY (WHITE) CAS MESSAGES

4.6.1 AC ON

AC ON

Condition:

- The air conditioner is selected on

4.6.2 DOOR SEAL LOW

DOOR SEAL LOW

Conditions:

- The DOOR SEAL switch is ON, and
- Door seal pressure is low for more than 10 seconds

4.6.3 DE-ICE ON

DE-ICE ON

Condition:

- The DE-ICE BOOTS switch is ON

4.6.4 ICE

ICE

Conditions:

- Airframe icing condition detected, and
- Ice protection systems turned on.

4.6.5 IGNITER ON

IGNITER ON

Condition:

- The igniters are on

4.6.6 INERT SEP OPEN

INERT SEP OPEN

Condition:

- The inertial separator vanes are open

4.6.7 PAX OXYGEN ON

PAX OXYGEN ON

Condition:

- The passenger oxygen system is pressurized

4.6.8 PUSHER ICE MODE

PUSHER ICE MODE

Conditions:

- The pusher system is in pusher ice mode, and
- The aircraft is below FL180

1. Final Approach Airspeed..... FLAPS UP: 130 KIAS
   FLAPS T/O: 125 KIAS

4.6.9 STARTER ON

STARTER ON

Condition:

- The starter is engaged

4.6.10 WSH HEAT ON

WSH HEAT ON

Condition:

- The WINDSH HEAT switch is ON, and
- OAT is less than 5°C

This Page Intentionally Left Blank

SECTION 5

PERFORMANCE

TABLE OF CONTENTS

5.1 GENERAL 3
5.2 ISA TEMPERATURE TABLE 3
5.3 AIRSPEED CALIBRATION 3
5.4 CABIN PRESSURIZATION SCHEDULE 4
5.5 OXYGEN DURATION 5
5.5.1 ALTITUDE VS. MINUTES – ONE CREWMEMBER 5
5.5.2 ALTITUDE VS. MINUTES – ONE CREWMEMBER 5
5.6 SAT/OAT CONVERSIONS 5
5.7 STALL SPEEDS 6
5.8 WIND COMPONENTS 7
5.9 ENGINE PERFORMANCE 8
5.9.1 MAXIMUM TAKEOFF POWER AT 1700 RPM 8
5.9.2 MAXIMUM CLIMB POWER AT 1700 RPM 9
5.9.3 MAXIMUM CRUISE POWER AT 1700 RPM 10
5.9.4 NORMAL (RECOMMENDED) CRUISE POWER AT 1700 RPM 11
5.9.5 ECONOMY CRUISE POWER AT 1700 RPM 12
5.10 TAKEOFF PERFORMANCE 13
5.10.1 NOISE CHARACTERISTICS 13
5.10.2 FLAPS T/O 14
5.10.3 FLAPS UP 15
5.11 RATE OF CLIMB 17
5.11.1 6,000 LB 17
5.11.2 7,000 LB 18
5.11.3 8,000 LB 19
5.12 TIME, FUEL, AND DISTANCE TO CLIMB 20
5.12.1 ISA-20 20
5.12.2 ISA 21
5.12.3 ISA+20 22
5.13 CRUISE PERFORMANCE 23
5.13.1 MAXIMUM CRUISE 23
5.13.2 NORMAL (RECOMMENDED) CRUISE 26
5.13.3 ECONOMY CRUISE 34
5.14 LANDING DISTANCE 39
5.14.1 FLAPS T/O 40
5.14.2 FLAPS FULL 42
5.15 NOISE CHARACTERISTICS 42

This Page Intentionally Left Blank

5.1 GENERAL

This section gives performance data for operation of the airplane. Refer to Section 9 SUPPLEMENTS, for performance data provided by optional equipment manufacturers or other indicated systems.

5.2 ISA TEMPERATURE TABLE

International Standard Atmosphere (ISA) defines standard sea level pressure as 1,013.25 mb (29.9 in) with temperature at 15ºC (59ºF). As atmospheric pressure decreases with altitude, the temperature decreases at a standard rate. Refer to the following table.

Altitude (ft)	Temp (°C)	Altitude (ft)	Temp (°C)	Altitude (ft)	Temp (°C)
SL	15	12,000	-9	24,000	-33
1,000	13	13,000	-11	25,000	-35
2,000	11	14,000	-13	26,000	-37
3,000	9	15,000	-15	27,000	-39
4,000	7	16,000	-17	28,000	-41
5,000	5	17,000	-19	29,000	-43
6,000	3	18,000	-21	30,000	-44
7,000	1	19,000	-23	31,000	-46
8,000	-1	20,000	-25	32,000	-48
9,000	-3	21,000	-27	33,000	-50
10,000	-5	22,000	-29	34,000	-52
11,000	-7	23,000	-31		

5.3 AIRSPEED CALIBRATION

As installed on the E1000, the Garmin 1000 NXi incorporates a static source error correction (SSEC) which eliminates the difference between KIAS and KCAS.

The following data applies to the standby instrument system.

Flaps UP and T/O		Flaps FULL	
Landing Gear Up / Down		Landing Gear Down	
KCAS	KIAS ESI-500	KCAS	KIAS ESI-500
75	74	75	74
100	99	100	99
125	124	125	123
150	146	130	128
175	173	N/A	N/A
200	198	N/A	N/A
225	223	N/A	N/A
250	248	N/A	N/A
270	268	N/A	N/A

5.4 CABIN PRESSURIZATION SCHEDULE

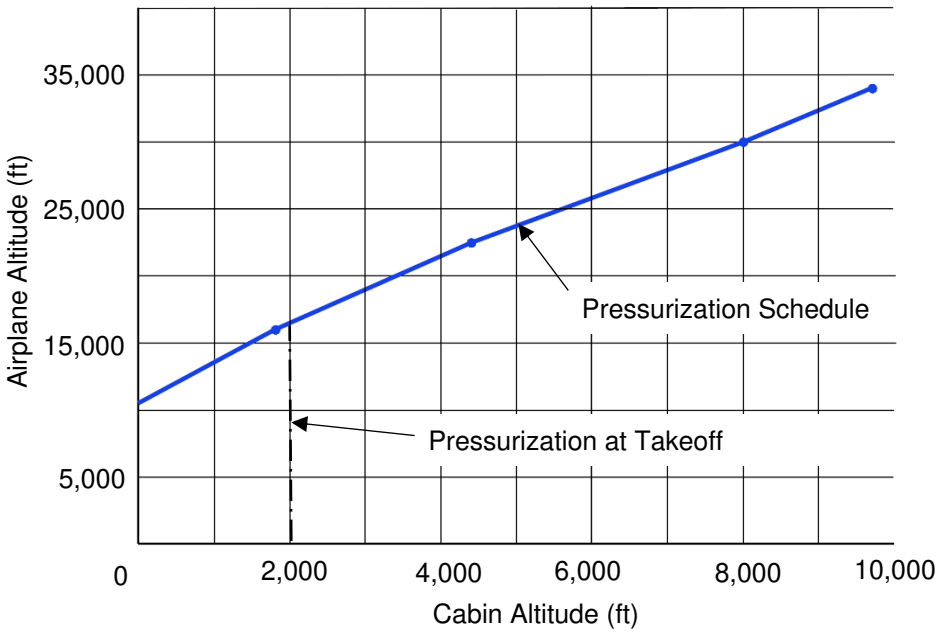

At the beginning of flight, cabin altitude will remain constant at the initial ground elevation pressure until the pressurization schedule (line shown) is reached then will follow the schedule.

In descent, the cabin altitude will follow the pressurization schedule down until reaching slightly above the PFD Landing Field Elevation (LFE) and will remain constant until landing.

5.5 OXYGEN DURATION

Conditions:

- The pilot quick-don mask set to NORM, and
- The bottle being filled to the equivalent of 1850 psi at 70°F ambient temperature

5.5.1 ALTITUDE VS. MINUTES – ONE CREWMEMBER

Altitude (ft)	Minutes				
	1 Crew + 0 Pax	1 Crew + 1 Pax	1 Crew + 2 Pax	1 Crew + 3 Pax	1 Crew + 4 Pax
10,000	420	348	297	259	229
15,000	396	331	284	249	222
20,000	311	244	200	170	148
25,000	201	156	127	108	93
30,000	226	157	121	98	82
34,000	306	174	122	93	76

5.5.2 ALTITUDE VS. MINUTES – TWO CREWMEMBERS

Altitude (FT)	Minutes				
	2 Crew + 0 Pax	2 Crew + 1 Pax	2 Crew + 2 Pax	2 Crew + 3 Pax	2 Crew + 4 Pax
10,000	210	190	174	160	148
15,000	198	180	165	153	142
20,000	156	137	122	110	100
25,000	100	88	78	70	64
30,000	113	93	79	68	60
34,000	153	111	87	72	61

5.6 SAT/OAT CONVERSIONS

As installed on the E1000, the Garmin 1000 NXi calculates SAT/OAT from airspeed and total air temperature.

5.7 STALL SPEEDS

Conditions:

- Forward boundary of the CG envelope
- Power off
- Balanced flight

Airplane Weight	Configuration		Bank			
	Flight Idle		0º	30º	45º	60º
	Ldg Gr	Flaps	KIAS	KIAS	KIAS	KIAS
6,000 lb (2,722 kg)	UP	UP	76	82	91	108
	DN	TO	74	79	88	104
	DN	FULL	64	68	76	90
7,600 lb (3,447 kg)	UP	UP	85	91	101	120
	DN	TO	83	89	99	117
	DN	FULL	68	73	81	96
8,000 lb (3,629 kg)	UP	UP	88	93	103	122
	DN	T/O	85	92	102	121
	DN	FULL	68	73	81	97

With Pusher Ice Mode active, stall speeds may increase by up to 15 knots with Flaps UP and T/O.

5.8 WIND COMPONENTS

Example:

Wind Speed	30 kts
Angle Between Flight Path and Wind Direction	30º
Crosswind Component	15 kts
Headwind Component	26 kts

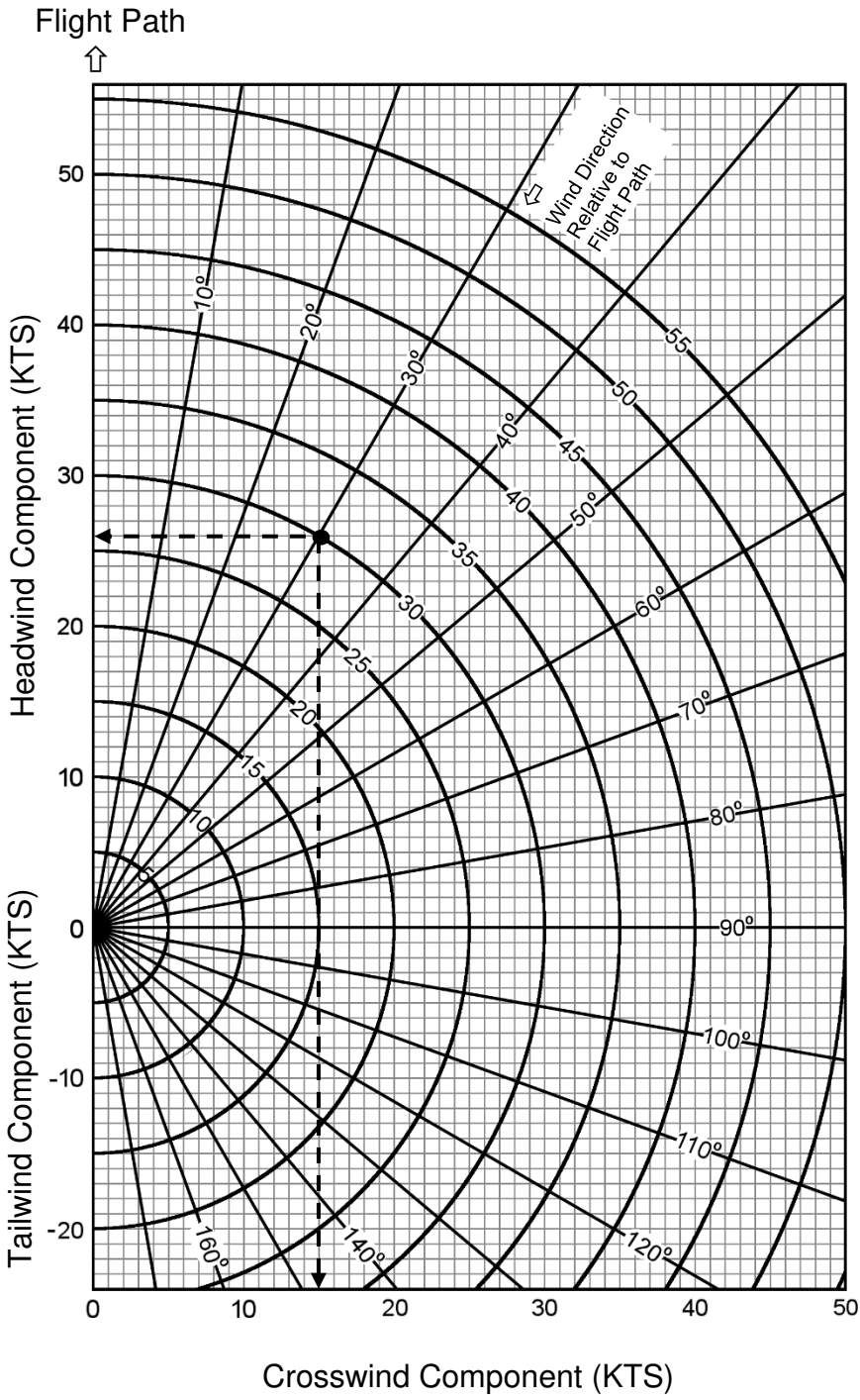

5.9 ENGINE PERFORMANCE

5.9.1 MAXIMUM TAKEOFF POWER AT 1700 RPM

Condition:

- ITT Limit = 850ºC
- Inertial separator OFF

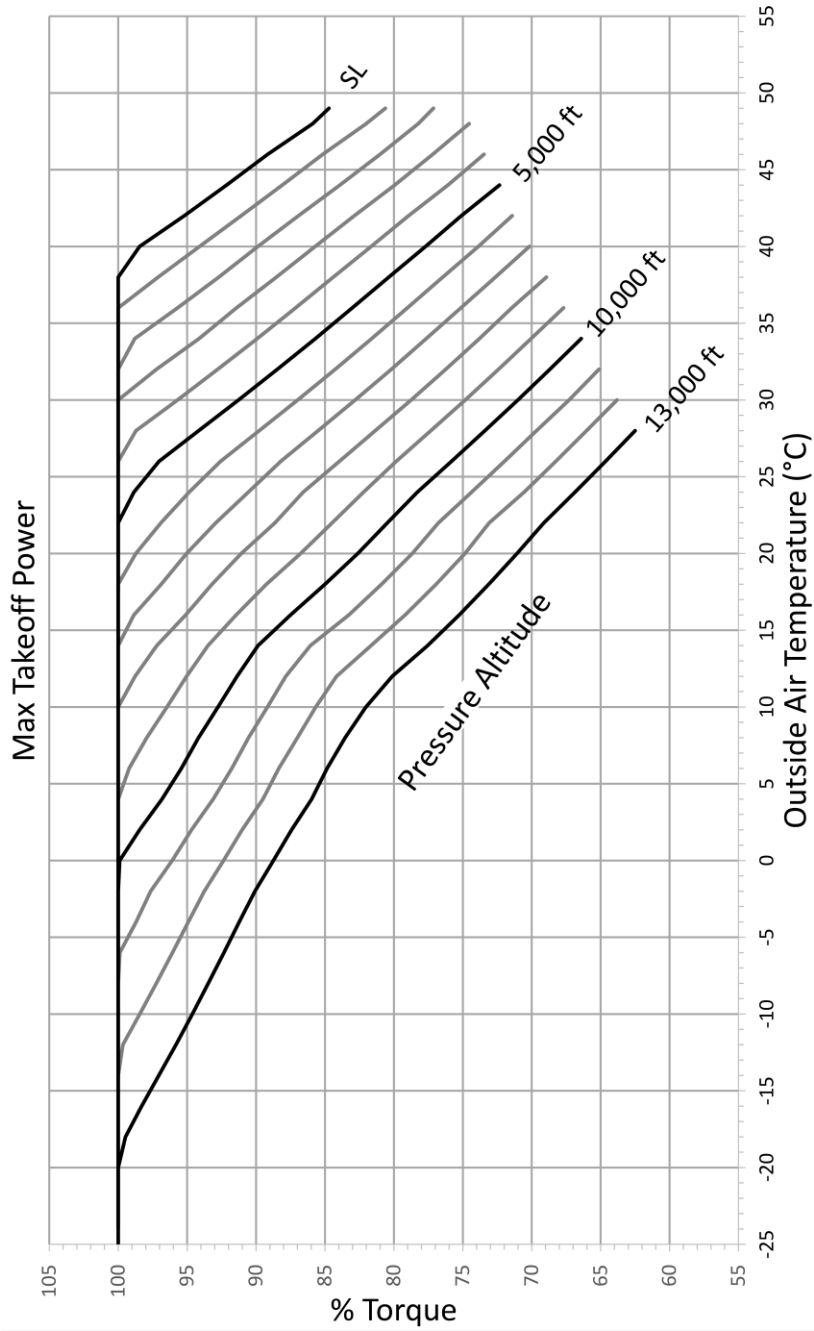

5.9.2 MAXIMUM CLIMB POWER AT 1700 RPM

Conditions:

- Climb Speed below FL240 = 150 KIAS
- Climb Speed at and above FL240 = 140 KIAS
- ITT Limit = 840ºC
- Inertial separator OFF

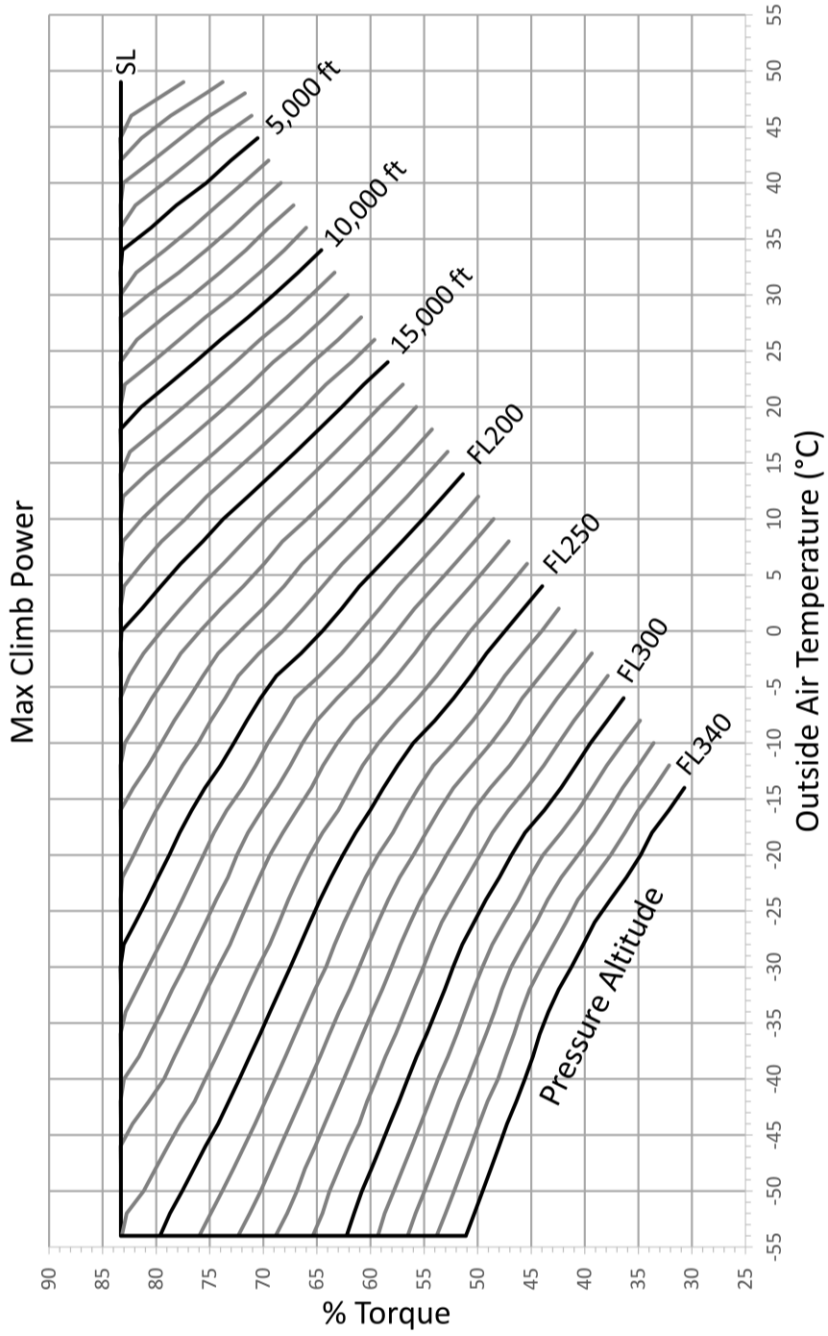

5.9.3 MAXIMUM CRUISE POWER AT 1700 RPM

Condition:

- ITT Limit = 840ºC
- FL240 to FL340
- Inertial separator OFF

NOTE

Normal Cruise – recommended by P&WC for extended engine life
Maximum Cruise – usage may affect engine life

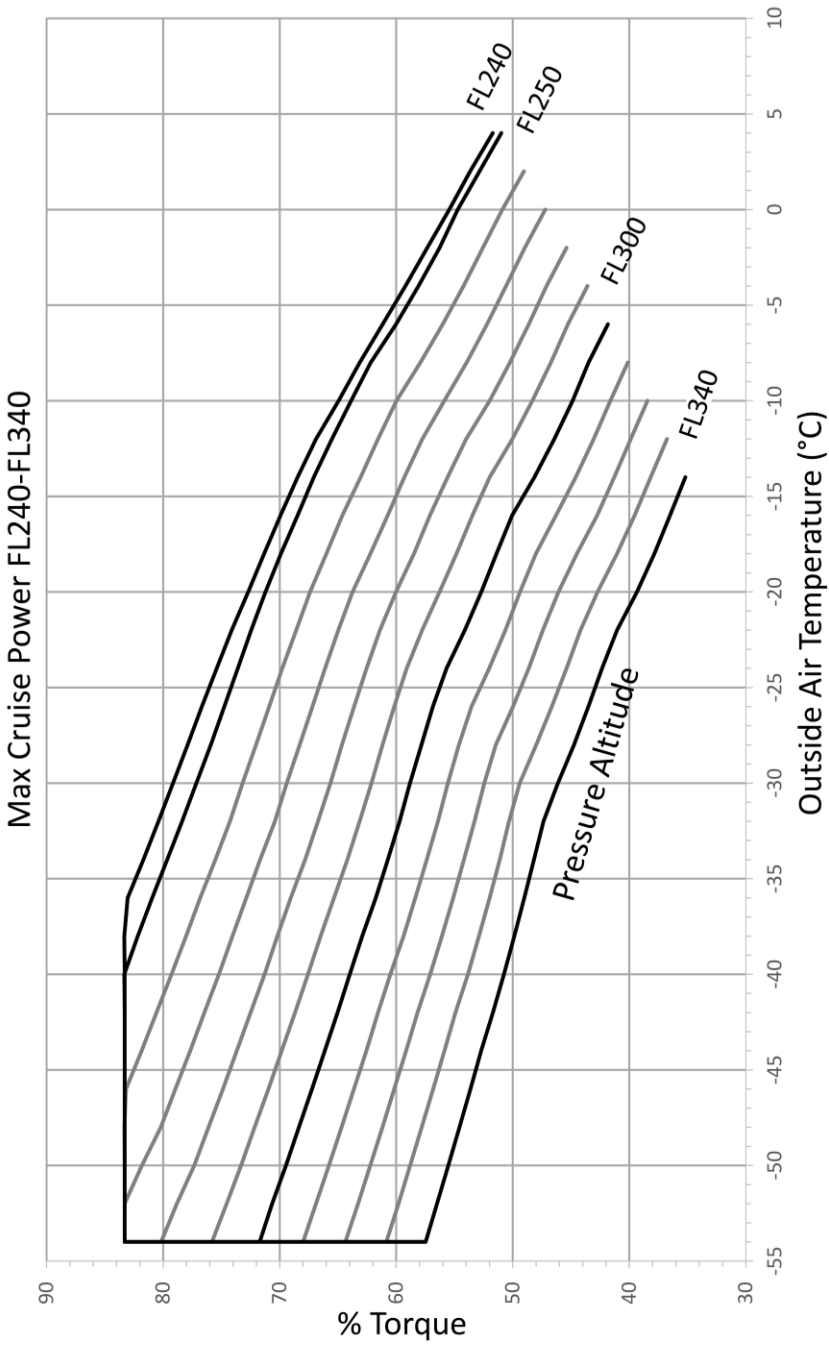

5.9.4 NORMAL (RECOMMENDED) CRUISE POWER AT 1700 RPM

Conditions:

- Normal Cruise Power
- Inertial Separator OFF
- ITT Limit = 840ºC

NOTE

Normal Cruise – recommended by P&WC for extended engine life
Maximum Cruise – usage may affect engine life

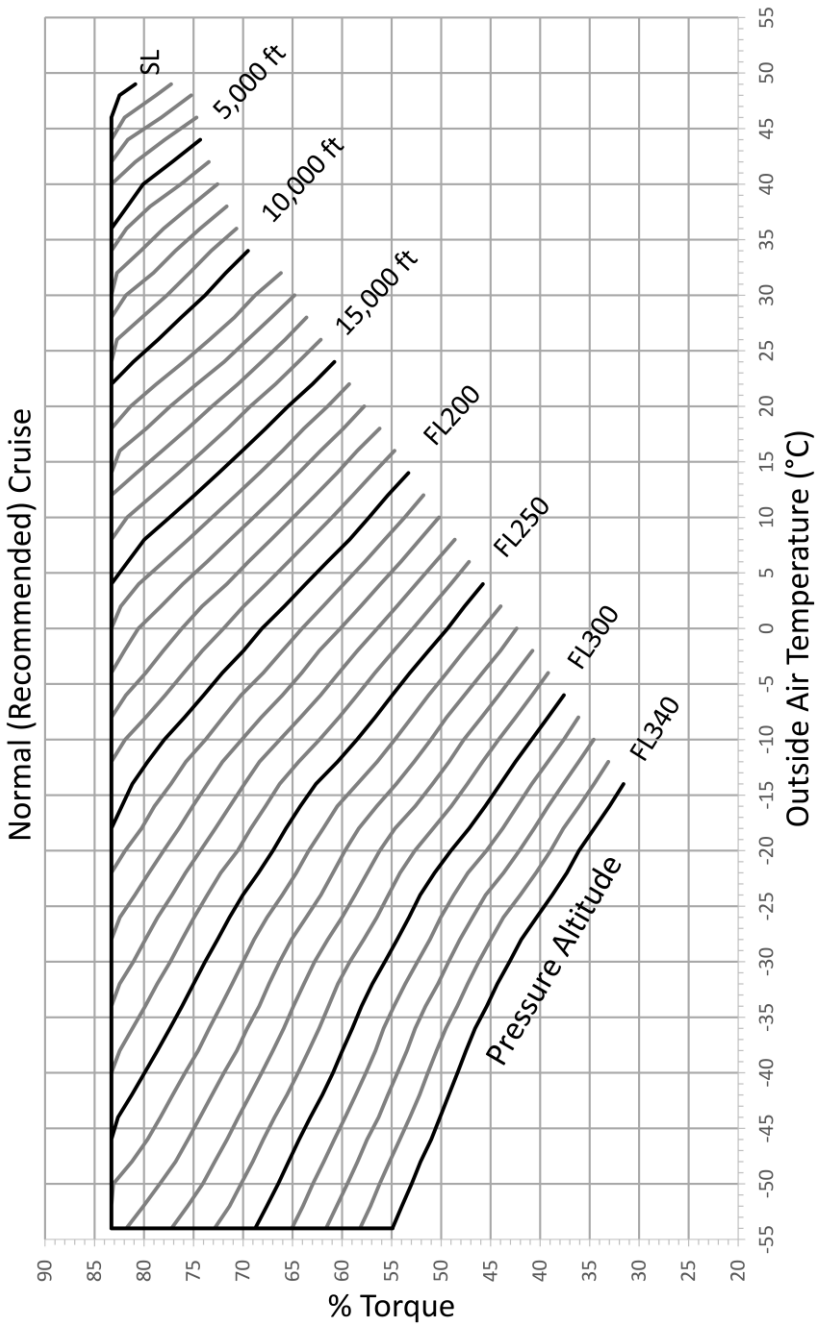

5.9.5 ECONOMY CRUISE POWER AT 1700 RPM

Condition:

- Inertial Separator OFF

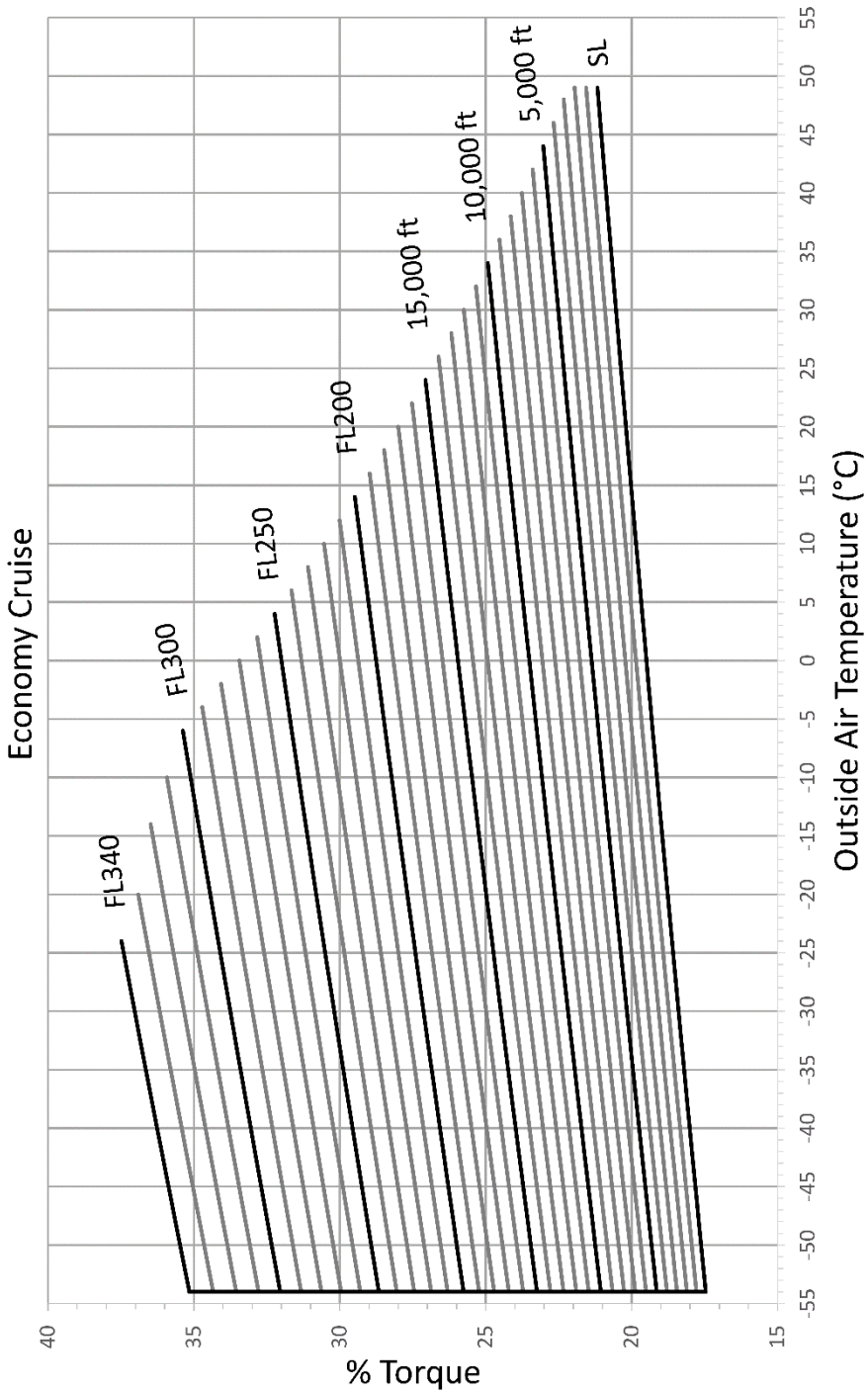

5.10 TAKEOFF PERFORMANCE

GR = Ground Roll (ft)
D50 = Takeoff Distance to clear a 50 ft obstacle

Conditions:

- Takeoff power set before brake release
- Paved, level, dry surface
- Rotate 90 KIAS
- Establish an attitude of 12.5º after rotation
- Headwind component = 0 knots
- Runway slope = 0º
- Inertial separator OFF

NOTE

Wet runways increase distance by a factor of 1.5. Runways with water and slush increase distance by a factor of 2.0

NOTE

Increase takeoff ground-roll distance by 22% for every 10 knots of tailwind up to 30 knots.

Increase takeoff distance to clear a 50 ft obstacle by 22% for every 10 knots of tailwind up to 30 knots.

Decrease takeoff ground-roll distance by 14% for every 10 knots of headwind up to 30 knots.

Decrease takeoff distance to clear a 50 ft obstacle by 11% for every 10 knots of headwind up to 30 knots.

Increase takeoff ground-roll distance 11% for every 1% of runway upslope up to 3% of slope.

Decrease takeoff ground-roll distance 1% for every 1% of runway downslope down to 3% of slope.

5.10.1 NOISE CHARACTERISTICS

The corrected takeoff noise level of this airplane, established in compliance with 14 CFR Part 36, Appendix G (Amdt 36-30), is 77.3 dB as determined by flight tests. No determination has been made by the Federal Aviation Administration that the noise levels of this airplane are or should be acceptable or unacceptable for operation at, into, or out of, any airport.

5.10.2 FLAPS T/O

5.10.2.1 TAKEOFF WEIGHT: 6,000 LB

Takeoff Weight: 6,000 lb, Flaps T/O												
PA (ft)	ISA Temp (ºC)	Dist (ft)	Temperature (ºC)									
			ISA -55	ISA -40	ISA -30	ISA -20	ISA -10	ISA	ISA +10	ISA +20	ISA +30	ISA +40
SL	15.0	GR	666	732	778	825	873	921	971	1021	1193	1511
		D50	993	1084	1146	1209	1273	1339	1406	1474	1726	2211
2000	11.0	GR	725	799	850	902	955	1009	1064	1120	1345	1702
		D50	1074	1174	1242	1312	1384	1457	1531	1607	1939	2483
4000	7.1	GR	790	873	929	987	1046	1106	1167	1229	1529	1945
		D50	1162	1273	1349	1427	1507	1587	1670	1754	2199	2834
6000	3.1	GR	863	954	1017	1081	1147	1214	1282	1413	1748	2220
		D50	1260	1383	1468	1554	1643	1733	1825	2011	2509	3236
8000	-0.8	GR	943	1045	1115	1186	1259	1334	1410	1629	2008	2547
		D50	1368	1505	1600	1696	1794	1,95	1997	2314	2880	3715
10000	-4.8	GR	1052	1168	1248	1329	1413	1498	1658	1910	2359	2998
		D50	1518	1674	1781	1891	2003	2117	2343	2710	3385	4386

5.10.2.2 TAKEOFF WEIGHT: 7,000 LB

Takeoff Weight: 7,000 lb, Flaps T/O												
PA (ft)	ISA Temp (ºC)	Dist (ft)	Temperature (ºC)									
			ISA -55	ISA -40	ISA -30	ISA -20	ISA -10	ISA	ISA +10	ISA +20	ISA +30	ISA +40
SL	15.0	GR	910	1001	1064	1128	1193	1260	1328	1397	1632	2072
		D50	1303	1424	1506	1591	1677	1764	1853	1944	2281	2932
2000	11.0	GR	991	1092	1162	1233	1306	1380	1455	1532	1841	2333
		D50	1410	1544	1635	1729	1824	1921	2020	2121	2566	3298
4000	7.1	GR	1081	1193	1271	1350	1430	1513	1597	1682	2095	2668
		D50	1528	1676	1778	1882	1988	2096	2206	2318	2915	3773
6000	3.1	GR	1180	1305	1391	1479	1569	1661	1754	1935	2395	3048
		D50	1659	1823	1936	2051	2169	2290	2413	2662	3331	4317
8000	-0.8	GR	1289	1429	1525	1623	1723	1826	1930	2231	2753	3498
		D50	1803	1986	2112	2240	2372	2506	2643	3068	3831	4970
10000	-4.8	GR	1439	1598	1708	1819	1934	2051	2270	2618	3237	4122
		D50	2002	2210	2354	2500	2650	2803	3106	3599	4513	5885

5.10.2.3 TAKOFF WEIGHT: 8,000 LB

Takeoff Weight: 8,000 lb, Flaps T/O											
PA (ft)	ISA Temp (ºC)	Dist (ft)	Temperature (ºC)								
			ISA -55	ISA -40	ISA -30	ISA -20	ISA -10	ISA	ISA +10	ISA +20	ISA +30	ISA +40
SL	15.0	GR	1194	1314	1396	1480	1566	1654	1743	1834	2144	2725
		D50	1659	1815	1921	2030	2141	2254	2369	2486	2923	3774
2000	11.0	GR	1300	1433	1525	1618	1714	1811	1910	2011	2420	3070
		D50	1797	1969	2087	2208	2331	2456	2584	2715	3293	4253
4000	7.1	GR	1418	1566	1668	1771	1877	1986	2096	2209	2754	3512
		D50	1949	2140	2271	2405	2542	2682	2824	2970	3747	4877
6000	3.1	GR	1548	1713	1826	1942	2060	2181	2304	2542	3151	4015
		D50	2117	2330	2476	2625	2777	2933	3092	3416	4290	5596
8000	-0.8	GR	1692	1876	2002	2131	2263	2398	2535	2932	3623	4612
		D50	2303	2540	2703	2869	3039	3213	3391	3944	4945	6463
10000	-4.8	GR	1890	2099	2242	2389	2540	2694	2983	3442	4263	5437
		D50	2560	2830	3015	3205	3399	3597	3991	4636	5841	7685

5.10.3 FLAPS UP

5.10.3.1 TAKEOFF WEIGHT: 6,000 LB

Takeoff Weight: 6,000 lb, Flaps UP											
PA (ft)	ISA Temp (ºC)	Dist (ft)	Temperature (ºC)								
			ISA -55	ISA -40	ISA -30	ISA -20	ISA -10	ISA	ISA +10	ISA +20	ISA +30	ISA +40
SL	15.0	GR	707	778	827	878	929	981	1035	1089	1278	1634
		D50	1090	1192	1262	1333	1406	1481	1556	1634	1922	2485
2000	11.0	GR	770	850	904	960	1017	1076	1135	1196	1444	1846
		D50	1180	1294	1371	1450	1531	1614	1698	1784	2167	2801
4000	7.1	GR	840	929	990	1052	1115	1180	1247	1314	1648	2117
		D50	1280	1406	1492	1580	1671	1763	1857	1952	2467	3213
6000	3.1	GR	918	1017	1085	1154	1225	1297	1371	1516	1889	2427
		D50	1391	1531	1627	1725	1826	1928	2033	2248	2826	3686
8000	-0.8	GR	1005	1115	1190	1268	1347	1428	1511	1752	2179	2797
		D50	1513	1669	1777	1886	1999	2113	2231	2596	3259	4257
10000	-4.8	GR	1123	1248	1334	1422	1513	1605	1781	2063	2571	3311
		D50	1682	1860	1982	2107	2236	2367	2627	3054	3851	5058

5.10.3.2 TAKEOFF WEIGHT: 7,000 LB

Takeoff Weight: 7,000 lb, Flaps UP											
PA (ft)	ISA Temp (ºC)	Dist (ft)	Temperature (ºC)									
			ISA -55	ISA -40	ISA -30	ISA -20	ISA -10	ISA	ISA +10	ISA +20	ISA +30	ISA +40
SL	15.0	GR	966	1064	1132	1200	1271	1343	1416	1490	1750	2241
		D50	1426	1561	1654	1749	1846	1944	2045	2148	2532	3286
2000	11.0	GR	1053	1162	1237	1313	1392	1472	1553	1636	1978	2532
		D50	1546	1696	1799	1904	2012	2122	2234	2348	2858	3710
4000	7.1	GR	1149	1271	1354	1439	1526	1615	1706	1799	2258	2906
		D50	1679	1845	1960	2077	2197	2319	2444	2572	3260	4266
6000	3.1	GR	1256	1391	1484	1579	1676	1775	1877	2075	2590	3334
		D50	1825	2011	2139	2269	2403	2539	2679	2965	3741	4906
8000	-0.8	GR	1374	1525	1629	1735	1843	1955	2068	2401	2989	3845
		D50	1988	2195	2338	2484	2633	2786	2942	3431	4323	5682
10000	-4.8	GR	1536	1708	1826	1947	2071	2198	2440	2828	3530	4555
		D50	2212	2448	2611	2777	2948	3123	3471	4044	5120	6774

5.10.3.3 TAKEOFF WEIGHT: 8,000 LB

Takeoff Weight: 8,000 lb, Flaps UP											
PA (ft)	ISA Temp (ºC)	Dist (ft)	Temperature (ºC)									
			ISA -55	ISA -40	ISA -30	ISA -20	ISA -10	ISA	ISA +10	ISA +20	ISA +30	ISA +40
SL	15.0	GR	1268	1396	1485	1576	1668	1762	1859	1957	2299	2949
		D50	1812	1985	2105	2226	2351	2478	2608	2740	3237	4221
2000	11.0	GR	1382	1525	1624	1724	1827	1932	2039	2149	2601	3333
		D50	1966	2159	2291	2426	2565	2706	2851	2998	3660	4776
4000	7.1	GR	1508	1668	1777	1889	2004	2121	2241	2363	2969	3828
		D50	2136	2351	2498	2649	2803	2961	3122	3286	4182	5506
6000	3.1	GR	1649	1826	1948	2073	2201	2332	2466	2727	3408	4395
		D50	2325	2564	2728	2896	3069	3245	3425	3796	4809	6351
8000	-0.8	GR	1804	2002	2139	2278	2421	2568	2717	3157	3935	5072
		D50	2534	2801	2984	3173	3365	3563	3764	4401	5571	7381
10000	-4.8	GR	2017	2243	2398	2558	2721	2888	3207	3720	4650	6014
		D50	2822	3126	3336	3551	3772	3997	4449	5197	6616	8840

5.11 RATE OF CLIMB

Conditions:

- Landing gear UP and flaps UP
- Maximum Climb Power
- Speed below FL240 = 150 KIAS
- Speed at and above FL240 = 140 KIAS
- Inertial separator OFF

5.11.1 6,000 LB

Weight (lb)	PA (ft)	Rate of Climb (ft/min)					
		ISA -20	ISA -10	ISA	ISA +10	ISA +20	ISA +30
6,000	SL	3,844	3,786	3,731	3,678	3,627	3,579
	2,000	3,753	3,695	3,640	3,587	3,536	3,488
	4,000	3,662	3,604	3,549	3,496	3,446	3,266
	6,000	3,571	3,513	3,458	3,406	3,355	3,029
	8,000	3,480	3,422	3,368	3,315	3,265	2,779
	10,000	3,390	3,332	3,278	3,226	3,176	2,525
	12,000	3,299	3,242	3,188	3,136	2,950	2,273
	14,000	3,210	3,153	3,098	3,047	2,672	2,089
	16,000	3,120	3,063	3,009	2,836	2,563	2,073
	18,000	3,031	2,977	2,942	2,750	2,484	2,034
	20,000	3,035	3,036	2,840	2,649	2,407	2,001
	22,000	3,124	2,931	2,744	2,571	2,346	1,979
	24,000	2,890	2,621	2,374	2,111	1,829	1,409
	26,000	2,576	2,335	2,119	1,875	1,607	1,234
	28,000	2,265	2,055	1,862	1,629	1,379	1,036
	30,000	1,970	1,778	1,614	1,395	1,158	845
	32,000	1,697	1,519	1,373	1,176	954	663
	34,000	1,439	1,276	1,150	971	761	486

5.11.2 7,000 LB

Weight (lb)	PA (ft)	Rate of Climb (ft/min)					
		ISA -20	ISA -10	ISA	ISA +10	ISA +20	ISA +30
7,000	SL	3,220	3,169	3,120	3,074	3,029	2,986
	2,000	3,140	3,089	3,040	2,993	2,949	2,906
	4,000	3,059	3,008	2,960	2,913	2,868	2,713
	6,000	2,979	2,928	2,879	2,833	2,788	2,507
	8,000	2,899	2,848	2,799	2,753	2,708	2,290
	10,000	2,819	2,768	2,719	2,673	2,629	2,069
	12,000	2,739	2,688	2,639	2,593	2,432	1,850
	14,000	2,659	2,608	2,560	2,514	2,190	1,689
	16,000	2,579	2,528	2,480	2,330	2,094	1,672
	18,000	2,500	2,451	2,419	2,252	2,023	1,635
	20,000	2,500	2,498	2,328	2,162	1,953	1,602
	22,000	2,572	2,405	2,242	2,092	1,897	1,580
	24,000	2,357	2,124	1,909	1,682	1,437	1,075
	12,000	2,739	2,688	2,639	2,593	2,432	1,850
	26,000	2,084	1,874	1,687	1,474	1,243	920
	28,000	1,813	1,630	1,461	1,259	1,042	745
	30,000	1,556	1,388	1,244	1,053	848	576
	32,000	1,317	1,160	1,032	860	666	415
	34,000	1,090	947	835	679	496	256

5.11.3 8,000 LB

Weight (lb)	PA (ft)	Rate of Climb (ft/min)					
		ISA -20	ISA -10	ISA	ISA +10	ISA +20	ISA +30
8,000	SL	2,742	2,696	2,652	2,610	2,569	2,530
	2,000	2,670	2,623	2,579	2,537	2,497	2,458
	4,000	2,597	2,551	2,507	2,464	2,424	2,286
	6,000	2,524	2,478	2,434	2,392	2,351	2,103
	8,000	2,451	2,405	2,361	2,319	2,278	1,911
	10,000	2,379	2,332	2,288	2,246	2,206	1,714
	12,000	2,306	2,260	2,215	2,173	2,031	1,519
	14,000	2,233	2,187	2,143	2,100	1,816	1,375
	16,000	2,160	2,114	2,070	1,936	1,728	1,357
	18,000	2,088	2,043	2,013	1,865	1,662	1,321
	20,000	2,084	2,081	1,930	1,783	1,597	1,288
	22,000	2,144	1,995	1,851	1,717	1,544	1,265
	24,000	1,942	1,735	1,544	1,343	1,126	806
	26,000	1,698	1,512	1,345	1,156	951	666
	28,000	1,456	1,294	1,143	963	770	508
	30,000	1,227	1,076	948	778	595	354
	32,000	1,013	872	757	603	431	207
	34,000	809	680	579	439	275	63

5.12 TIME, FUEL, AND DISTANCE TO CLIMB

Conditions:

- Landing gear UP and flaps UP
- Maximum Climb Power
- Speed below FL240 = 150 KIAS
- Speed at and above FL240 = 140 KIAS
- Fuel consumed for startup, taxi, and takeoff = 5 gal
- Inertial separator OFF

5.12.1 ISA-20

Time, Fuel, and Distance to Climb: ISA-20										
PA (ft)	Temp (ºC)	6,000 lb			7,000 lb			8,000 lb		
		Time (min:s)	Fuel (gal)	Distance (nm)	Time (min:s)	Fuel (gal)	Distance (nm)	Time (min:s)	Fuel (gal)	Distance (nm)
SL	-5.0	--	0	0	--	0	0	--	0	0
2000	-9.0	00:32	1	1	00:38	1	2	00:44	1	2
4000	-12.9	01:04	2	3	01:16	2	3	01:30	2	4
6000	-16.9	01:37	2	4	01:56	3	5	02:17	3	6
8000	-20.8	02:11	3	6	02:37	4	7	03:05	5	8
10000	-24.8	02:46	4	7	03:19	5	9	03:55	6	10
12000	-28.8	03:22	5	9	04:02	6	11	04:46	7	13
14000	-32.7	03:59	6	11	04:47	7	13	05:39	8	16
16000	-36.7	04:37	6	13	05:33	8	16	06:34	9	18
18000	-40.7	05:16	7	15	06:20	9	18	07:30	10	22
20000	-44.6	05:55	8	17	07:08	10	21	08:28	12	25
22000	-48.6	06:34	9	19	07:55	11	23	09:24	13	28
24000	-52.5	07:14	10	21	08:44	12	26	10:23	14	31

5.12.2 ISA

Time, Fuel, and Distance to Climb: ISA										
PA (ft)	Temp (ºC)	6,000 lb			7,000 lb			8,000 lb		
		Time (min:s)	Fuel (gal)	Distance (nm)	Time (min:s)	Fuel (gal)	Distance (nm)	Time (min:s)	Fuel (gal)	Distance (nm)
SL	15.0	--	0	0	--	0	0	--	0	0
2000	11.0	00:33	1	1	00:39	1	2	00:46	1	2
4000	7.1	01:06	2	3	01:19	2	3	01:33	2	4
6000	3.1	01:40	3	4	02:00	3	5	02:22	4	6
8000	-0.8	02:15	3	6	02:42	4	7	03:12	5	9
10000	-4.8	02:52	4	8	03:26	5	10	04:03	6	11
12000	-8.8	03:29	5	10	04:11	6	12	04:57	7	14
14000	-12.7	04:07	6	12	04:57	7	14	05:52	8	17
16000	-16.7	04:46	7	14	05:44	8	17	06:49	10	20
18000	-20.7	05:26	8	16	06:33	9	20	07:48	11	23
20000	-24.6	06:08	9	18	07:24	10	22	08:48	12	27
22000	-28.6	06:51	9	21	08:17	11	26	09:52	14	31
24000	-32.5	07:38	10	24	09:15	12	29	11:03	15	35
26000	-36.5	08:32	11	27	10:22	14	33	12:27	16	40
28000	-40.5	09:32	12	30	11:38	15	37	14:04	18	45
30000	-44.4	10:42	13	35	13:08	16	43	16:00	20	53
32000	-48.4	12:02	15	40	14:54	18	50	18:22	22	62
34000	-52.4	13:38	16	47	17:04	20	59	21:25	24	74

5.12.3 ISA+20

Time, Fuel, and Distance to Climb: ISA+20										
PA (ft)	Temp (ºC)	6,000 lb			7,000 lb			8,000 lb		
		Time (min:s)	Fuel (gal)	Distance (nm)	Time (min:s)	Fuel (gal)	Distance (nm)	Time (min:s)	Fuel (gal)	Distance (nm)
SL	35.0	--	0	0	--	0	0	--	0	0
2000	31.0	00:34	1	1	00:40	1	2	00:47	1	2
4000	27.1	01:08	2	3	01:21	2	4	01:36	3	4
6000	23.1	01:43	3	5	02:04	3	6	02:26	4	7
8000	19.2	02:19	4	7	02:48	4	8	03:18	5	9
10000	15.2	02:57	4	8	03:33	5	10	04:12	6	12
12000	11.2	03:36	5	10	04:20	6	13	05:09	8	15
14000	7.3	04:19	6	13	05:12	8	16	06:11	9	19
16000	3.3	05:05	7	15	06:08	9	19	07:19	11	22
18000	-0.7	05:52	8	18	07:06	10	22	08:30	12	26
20000	-4.6	06:41	9	21	08:07	11	26	09:43	13	31
22000	-8.6	07:32	10	24	09:09	12	30	11:00	15	36
24000	-12.5	08:30	11	28	10:23	14	34	12:32	16	41
26000	-16.5	09:40	12	32	11:53	15	39	14:28	18	48
28000	-20.5	11:01	13	37	13:38	17	46	16:49	20	57
30000	-24.4	12:36	15	43	15:47	18	54	19:48	23	69
32000	-28.4	14:31	16	51	18:28	20	65	23:48	26	85
34000	-32	16:53	18	61	21:59	23	80	29:46	30	110

5.13 CRUISE PERFORMANCE

5.13.1 MAXIMUM CRUISE

Condition:

- Maximum Cruise Power
- Inertial separator OFF
- Landing gear UP and flaps UP

5.13.1.1 MAXIMUM CRUISE AT ISA -20

Pressure Altitude (ft)	OAT (ºC)	TRQ (%)	Fuel Flow (gal/hr)	8,000 lb	
				KIAS	KTAS
24000	-52.5	83.3	71	241	331

5.13.1.2 MAXIMUM CRUISE AT ISA -10

Pressure Altitude (ft)	OAT (ºC)	TRQ (%)	Fuel Flow (gal/hr)	8,000 lb	
				KIAS	KTAS
24000	-42.5	83.3	72	231	325
26000	-46.5	83.3	72	230	334
28000	-50.5	77.8	67	220	331
30000	-54.4	72.0	62	211	328

5.13.1.3 MAXIMUM CRUISE AT ISA -5

Pressure Altitude (ft)	OAT (ºC)	TRQ (%)	Fuel Flow (gal/hr)	8,000 lb	
				KIAS	KTAS
24000	-37.5	83.3	73	226	321
26000	-41.5	80.6	70	223	328
28000	-45.5	74.8	65	213	324
30000	-49.4	69.4	61	205	323
32000	-53.4	64.6	57	199	325

5.13.1.4 MAXIMUM CRUISE AT ISA

Pressure Altitude (ft)	OAT (ºC)	TRQ (%)	Fuel Flow (gal/hr)	8,000 lb	
				KIAS	KTAS
24000	-32.5	81.1	72	222	319
26000	-36.5	77.2	68	217	323
28000	-40.5	71.7	63	208	320
30000	-44.4	66.3	59	201	321
32000	-48.4	61.3	54	194	321
34000	-52.4	56.6	50	188	322

5.13.1.5 MAXIMUM CRUISE AT ISA +5

Pressure Altitude (ft)	OAT (ºC)	TRQ (%)	Fuel Flow (gal/hr)	8,000 lb	
				KIAS	KTAS
24000	-27.5	77.9	69	219	318
26000	-31.5	74.0	66	211	317
28000	-35.5	68.8	61	203	316
30000	-39.4	63.8	57	195	315
32000	-43.4	58.9	53	189	316
34000	-47.4	54.2	49	183	318

5.13.1.6 MAXIMUM CRUISE AT ISA +10

Pressure Altitude (ft)	OAT (ºC)	TRQ (%)	Fuel Flow (gal/hr)	8,000 lb	
				KIAS	KTAS
24000	-22.5	74.8	67	217	319
26000	-26.5	71.3	64	205	312
28000	-30.5	65.9	60	196	309
30000	-34.4	61.0	55	189	309
32000	-38.4	56.3	51	184	312
34000	-42.4	51.8	47	177	311

5.13.1.7 MAXIMUM CRUISE AT ISA +20

Pressure Altitude (ft)	OAT (ºC)	TRQ (%)	Fuel Flow (gal/hr)	8,000 lb	
				KIAS	KTAS
24000	-12.5	67.7	63	201	302
26000	-16.5	65.0	60	198	308
28000	-20.5	60.3	56	191	308
30000	-24.4	55.9	52	183	306
32000	-28.4	51.7	48	178	308
34000	-32.4	47.4	44	170	306

5.13.1.8 MAXIMUM CRUISE AT ISA +30

Pressure Altitude (ft)	OAT (ºC)	TRQ (%)	Fuel Flow (gal/hr)	8,000 lb	
				KIAS	KTAS
24000	-2.5	58.3	57	190	291
26000	-6.5	56.5	54	189	300
28000	-10.5	52.5	51	182	299
30000	-14.4	48.5	47	175	298
32000	-18.4	44.8	43	169	299
34000	-22.4	41.3	40	162	298

5.13.2 NORMAL (RECOMMENDED) CRUISE

Condition:

- Normal Cruise Power
- Inertial Separator OFF
- Landing gear UP and flaps UP

5.13.2.1 NORMAL (RECOMMENDED) CRUISE AT ISA -30

Pressure Altitude (ft)	OAT (ºC)	TRQ (%)	Fuel Flow (gal/hr)	8,000 lb	
				KIAS	KTAS
0	-15	83.3	91	250	237
2000	-19	83.3	88	250	243
4000	-22.9	83.3	86	250	250
6000	-26.9	83.3	83	250	257
8000	-30.8	83.3	81	250	264
10000	-34.8	83.3	79	250	272
12000	-38.8	83.3	78	245	275
14000	-42.7	83.3	77	245	283
16000	-46.7	83.3	75	245	291
18000	-50.7	83.3	74	245	300
20000	-54.6	83.3	73	245	309

5.13.2.2 NORMAL (RECOMMENDED) CRUISE AT ISA -20

Pressure Altitude (ft)	OAT (ºC)	TRQ (%)	Fuel Flow (gal/hr)	8,000 lb	
				KIAS	KTAS
0	-5	83.3	92	250	241
2000	-9	83.3	89	250	248
4000	-12.9	83.3	87	250	255
6000	-16.9	83.3	84	250	262
8000	-20.8	83.3	82	250	270
10000	-24.8	83.3	80	250	278
12000	-28.8	83.3	79	245	280
14000	-32.7	83.3	77	245	289
16000	-36.7	83.3	76	245	297
18000	-40.7	83.3	74	245	306
20000	-44.6	83.3	73	245	316
22000	-48.6	83.3	72	245	326
24000	-52.5	83.3	71	241	331

5.13.2.3 NORMAL (RECOMMENDED) CRUISE AT ISA -10

Pressure Altitude (ft)	OAT (ºC)	TRQ (%)	Fuel Flow (gal/hr)	8,000 lb	
				KIAS	KTAS
0	5	83.3	93	250	246
2000	1	83.3	90	250	253
4000	-2.9	83.3	88	250	260
6000	-6.9	83.3	85	250	267
8000	-10.8	83.3	83	250	275
10000	-14.8	83.3	81	250	283
12000	-18.8	83.3	79	245	286
14000	-22.7	83.3	78	245	295
16000	-26.7	83.3	77	245	304
18000	-30.7	83.3	75	245	313
20000	-34.6	83.3	74	245	323
22000	-38.6	83.3	73	238	324
24000	-42.5	83.3	72	230	323
26000	-46.5	79.9	69	221	321
28000	-50.5	74.3	65	213	320
30000	-54.4	69.0	60	205	319

5.13.2.4 NORMAL (RECOMMENDED) CRUISE AT ISA -5

Pressure Altitude (ft)	OAT (ºC)	TRQ (%)	Fuel Flow (gal/hr)	8,000 lb	
				KIAS	KTAS
0	10	83.3	94	250	248
2000	6	83.3	91	250	255
4000	2.1	83.3	88	250	262
6000	-1.9	83.3	86	250	270
8000	-5.8	83.3	83	250	278
10000	-9.8	83.3	81	250	286
12000	-13.8	83.3	80	245	289
14000	-17.7	83.3	78	245	298
16000	-21.7	83.3	77	245	307
18000	-25.7	83.3	76	245	316
20000	-29.6	83.3	74	240	320
22000	-33.6	83.3	74	232	319
24000	-37.5	82.1	72	224	319
26000	-41.5	76.8	67	216	318
28000	-45.5	71.3	63	208	317
30000	-49.4	66.2	58	201	317
32000	-53.4	61.2	54	193	315

5.13.2.5 NORMAL (RECOMMENDED) CRUISE AT ISA

Pressure Altitude (ft)	OAT (ºC)	TRQ (%)	Fuel Flow (gal/hr)	8,000 lb	
				KIAS	KTAS
0	15	83.3	94	250	250
2000	11	83.3	91	250	257
4000	7.1	83.3	89	250	265
6000	3.1	83.3	86	250	272
8000	-0.8	83.3	84	250	280
10000	-4.8	83.3	81	250	289
12000	-8.8	83.3	80	245	292
14000	-12.7	83.3	79	245	300
16000	-16.7	83.3	77	245	310
18000	-20.7	83.3	76	242	316
20000	-24.6	83.3	75	234	315
22000	-28.6	83.3	74	226	314
24000	-32.5	78.9	70	219	315
26000	-36.5	73.6	65	211	314
28000	-40.5	68.4	61	204	314
30000	-44.4	63.4	56	196	313
32000	-48.4	58.7	52	189	313
34000	-52.4	54.1	49	181	311

5.13.2.6 NORMAL (RECOMMENDED) CRUISE AT ISA +5

Pressure Altitude (ft)	OAT (ºC)	TRQ (%)	Fuel Flow (gal/hr)	8,000 lb	
				KIAS	KTAS
0	20	83.3	95	250	252
2000	16	83.3	92	250	259
4000	12.1	83.3	89	250	267
6000	8.1	83.3	86	250	275
8000	4.2	83.3	84	250	283
10000	0.2	83.3	82	250	291
12000	-3.8	83.3	81	245	294
14000	-7.7	83.3	79	245	303
16000	-11.7	83.3	78	243	310
18000	-15.7	83.3	77	236	311
20000	-19.6	83.3	75	229	312
22000	-23.6	80.6	72	220	310
24000	-27.5	76.0	68	214	311
26000	-31.5	70.8	63	206	310
28000	-35.5	65.6	59	199	310
30000	-39.4	60.7	55	192	310
32000	-43.4	56.1	51	185	310
34000	-47.4	51.7	47	177	308

5.13.2.7 NORMAL (RECOMMENDED) CRUISE AT ISA +10

Pressure Altitude (ft)	OAT (ºC)	TRQ (%)	Fuel Flow (gal/hr)	8,000 lb	
				KIAS	KTAS
0	25	83.3	95	250	254
2000	21	83.3	92	250	262
4000	17.1	83.3	89	250	269
6000	13.1	83.3	87	250	277
8000	9.2	83.3	85	250	285
10000	5.2	83.3	82	250	294
12000	1.2	83.3	81	245	297
14000	-2.7	83.3	80	243	304
16000	-6.7	83.3	78	236	304
18000	-10.7	83.3	77	229	305
20000	-14.6	81.7	75	222	305
22000	-18.6	77.0	70	215	306
24000	-22.5	72.7	66	209	307
26000	-26.5	67.9	62	201	306
28000	-30.5	63.0	57	194	306
30000	-34.4	58.2	53	187	306
32000	-38.4	53.6	49	180	305
34000	-42.4	49.3	45	173	304

5.13.2.8 NORMAL (RECOMMENDED) CRUISE AT ISA +20

Pressure Altitude (ft)	OAT (ºC)	TRQ (%)	Fuel Flow (gal/hr)	8,000 lb	
				KIAS	KTAS
0	35	83.3	96	250	259
2000	31	83.3	93	250	266
4000	27.1	83.3	90	250	274
6000	23.1	83.3	88	250	282
8000	19.2	83.3	85	247	287
10000	15.2	83.3	83	241	289
12000	11.2	83.3	82	235	290
14000	7.3	83.3	81	229	292
16000	3.3	81.5	78	223	293
18000	-0.7	76.9	73	216	294
20000	-4.6	72.8	69	210	295
22000	-8.6	68.8	65	204	296
24000	-12.5	65.1	61	197	296
26000	-16.5	60.9	57	191	297
28000	-20.5	56.5	53	184	297
30000	-24.4	52.3	49	178	297
32000	-28.4	48.3	46	172	297
34000	-32.4	44.6	42	166	294

5.13.2.9 NORMAL (RECOMMENDED) CRUISE AT ISA +30

Pressure Altitude (ft)	OAT (ºC)	TRQ (%)	Fuel Flow (gal/hr)	8,000 lb	
				KIAS	KTAS
0	45	83.3	98	250	263
2000	41	83.3	94	250	270
4000	37.1	83.3	91	244	272
6000	33.1	83.3	89	238	273
8000	29.2	81.6	85	232	274
10000	25.2	78.6	81	226	276
12000	21.2	75.7	78	220	277
14000	17.3	72.5	74	214	278
16000	13.3	69.0	70	206	276
18000	9.3	65.7	66	203	281
20000	5.4	62.2	62	198	284
22000	1.4	58.7	58	192	285
24000	-2.5	55.4	55	187	287
26000	-6.5	51.8	51	181	288
28000	-10.5	48.0	47	175	288
30000	-14.4	44.3	44	169	289
32000	-18.4	40.9	41	164	291
34000	-22.4	37.5	38	158	291

5.13.3 ECONOMY CRUISE

Condition:

- Economy Cruise Power
- Inertial Separator OFF
- Landing gear UP and flaps UP

5.13.3.1 ECONOMY CRUISE AT ISA -30

Pressure Altitude (ft)	OAT (ºC)	TRQ (%)	Fuel Flow (gal/hr)	8,000 lb	
				KIAS	KTAS
0	-15	18.8	46	137	130
2000	-19	19.5	45	137	133
4000	-22.9	20.1	43	137	137
6000	-26.9	20.7	42	137	141
8000	-30.8	21.3	41	137	145
10000	-34.8	21.9	39	137	150
12000	-38.8	22.7	39	137	154
14000	-42.7	23.3	38	137	159
16000	-46.7	24.1	37	137	164
18000	-50.7	24.8	36	137	169
20000	-54.6	25.7	35	137	175

5.13.3.2 ECONOMY CRUISE AT ISA -20

Pressure Altitude (ft)	OAT (ºC)	TRQ (%)	Fuel Flow (gal/hr)	8,000 lb	
				KIAS	KTAS
0	-5	19.3	47	137	132
2000	-9	19.9	45	137	136
4000	-12.9	20.5	44	137	140
6000	-16.9	21.1	43	137	144
8000	-20.8	21.8	41	137	148
10000	-24.8	22.4	40	137	153
12000	-28.8	23.1	39	137	158
14000	-32.7	23.8	39	137	163
16000	-36.7	24.6	38	137	168
18000	-40.7	25.4	37	137	173
20000	-44.6	26.3	36	137	179
22000	-48.6	27.2	35	137	185
24000	-52.5	28.1	34	137	191

5.13.3.3 ECONOMY CRUISE AT ISA -10

Pressure Altitude (ft)	OAT (ºC)	TRQ (%)	Fuel Flow (gal/hr)	8,000 lb	
				KIAS	KTAS
0	5	19.7	48	137	135
2000	1	20.3	46	137	139
4000	-2.9	20.8	45	137	143
6000	-6.9	21.5	43	137	147
8000	-10.8	22.2	42	137	151
10000	-14.8	22.8	41	137	156
12000	-18.8	23.6	40	137	161
14000	-22.7	24.3	40	137	166
16000	-26.7	25.2	39	137	171
18000	-30.7	26.0	38	137	177
20000	-34.6	26.8	37	137	183
22000	-38.6	27.8	36	137	189
24000	-42.5	28.7	35	137	195
26000	-46.5	29.7	35	137	202
28000	-50.5	30.8	34	137	209
30000	-54.4	31.9	34	137	216

5.13.3.4 ECONOMY CRUISE AT ISA -5

Pressure Altitude (ft)	OAT (ºC)	TRQ (%)	Fuel Flow (gal/hr)	8,000 lb	
				KIAS	KTAS
0	10	19.8	48	137	136
2000	6	20.4	46	137	140
4000	2.1	21.1	45	137	144
6000	-1.9	21.7	44	137	148
8000	-5.8	22.3	42	137	153
10000	-9.8	23.1	41	137	158
12000	-13.8	23.8	41	137	162
14000	-17.7	24.6	40	137	168
16000	-21.7	25.4	39	137	173
18000	-25.7	26.3	38	137	179
20000	-29.6	27.1	37	137	185
22000	-33.6	28.0	36	137	191
24000	-37.5	29.0	36	137	197
26000	-41.5	30.1	35	137	204
28000	-45.5	31.2	35	137	211
30000	-49.4	32.3	34	137	219
32000	-53.4	33.5	34	137	227

5.13.3.5 ECONOMY CRUISE AT ISA

Pressure Altitude (ft)	OAT (ºC)	TRQ (%)	Fuel Flow (gal/hr)	8,000 lb	
				KIAS	KTAS
0	15	20.0	48	137	137
2000	11	20.6	47	137	141
4000	7.1	21.3	45	137	145
6000	3.1	21.9	44	137	150
8000	-0.8	22.6	43	137	154
10000	-4.8	23.3	42	137	159
12000	-8.8	24.0	41	137	164
14000	-12.7	24.8	40	137	169
16000	-16.7	25.6	39	137	175
18000	-20.7	26.4	39	137	181
20000	-24.6	27.3	38	137	187
22000	-28.6	28.3	37	137	193
24000	-32.5	29.3	36	137	199
26000	-36.5	30.3	35	137	206
28000	-40.5	31.4	35	137	214
30000	-44.4	32.6	35	137	221
32000	-48.4	33.8	35	137	229
34000	-52.4	35.2	35	137	238

5.13.3.6 ECONOMY CRUISE AT ISA +5

Pressure Altitude (ft)	OAT (ºC)	TRQ (%)	Fuel Flow (gal/hr)	8,000 lb	
				KIAS	KTAS
0	20	20.2	49	137	138
2000	16	20.8	47	137	142
4000	12.1	21.4	46	137	147
6000	8.1	22.1	44	137	151
8000	4.2	22.8	43	137	156
10000	0.2	23.5	42	137	161
12000	-3.8	24.3	41	137	166
14000	-7.7	25.1	41	137	171
16000	-11.7	25.9	40	137	176
18000	-15.7	26.8	39	137	182
20000	-19.6	27.7	38	137	188
22000	-23.6	28.6	37	137	195
24000	-27.5	29.6	36	137	201
26000	-31.5	30.7	36	137	209
28000	-35.5	31.8	36	137	216
30000	-39.4	33.0	35	137	224
32000	-43.4	34.3	35	137	232
34000	-47.4	35.6	35	137	240

5.14 LANDING DISTANCE

GR = Ground Roll (ft)
D50 = Landing Distance from 50 ft above the runway

Conditions:

- Paved, level, dry surface
- Power as required to maintain 3º approach
- Flaps FULL
- Approach speed = 95 KIAS
- Braking maximum
- Power on rollout Ground Fine
- Headwind component = 0 knots
- Runway slope = 0º

CAUTION

WITH FLAPS UP ALLOW FOR LANDING DISTANCE INCREASE OF 65% MORE THAN FLAPS FULL.

CAUTION

WHEN LANDING IN PUSHER ICE MODE INCREASE LANDING DISTANCE BY 55%.

NOTE

Increase landing ground-roll distance 40% for every 10 knots of tailwind up to 30 knots.

Increase landing distance from 50 ft above the runway 45% for every 10 knots of tailwind up to 30 knots.

Decrease landing ground-roll distance 9% for every 10 knots of headwind up to 30 knots.

Decrease landing distance from 50 ft above the runway 6% for every 10 knots of headwind up to 30 knots.

Decrease landing ground-roll distance 1% for every 1% of runway upslope.

Increase landing ground-roll distance 6% for every 1% of runway downslope.

5.14.1 FLAPS T/O

5.14.1.1 LANDING WEIGHT: 5,600 LB

Landing Weight: 5,600 lb, Flaps T/O												
PA (ft)	ISA Temp (ºC)	Dist (ft)	Temperature (ºC)									
			ISA -55	ISA -40	ISA -30	ISA -20	ISA -10	ISA	ISA +10	ISA +20	ISA +30	ISA +40
SL	15.0	GR	792	843	877	911	945	979	1013	1047	1081	1115
		D50	1328	1398	1445	1492	1539	1587	1634	1682	1730	1185
2000	11.0	GR	838	893	929	966	1002	1039	1076	1112	1149	1260
		D50	1389	1464	1515	1565	1616	1667	1718	1770	1821	1342
4000	7.1	GR	887	946	985	1024	1064	1103	1142	1182	1221	1429
		D50	1455	1536	1590	1645	1699	1754	1809	1864	1920	1554
6000	3.1	GR	939	1002	1045	1087	1130	1172	1214	1257	1299	1778
		D50	1526	1613	1672	1730	1789	1848	1907	1967	2026	1873
8000	-0.8	GR	994	1063	1109	1154	1200	1246	1292	1338	1383	1975
		D50	1602	1696	1759	1823	1886	1950	2014	2078	2142	2086
10000	-4.8	GR	1075	1151	1201	1252	1302	1353	1403	1453	1504	2206
		D50	1719	1822	1892	1961	2031	2101	2172	2242	2313	2384

5.14.1.2 LANDING WEIGHT: 6,600 LB

Landing Weight: 6,600 lb, Flaps T/O												
PA (ft)	ISA Temp (ºC)	Dist (ft)	Temperature (ºC)									
			ISA -55	ISA -40	ISA -30	ISA -20	ISA -10	ISA	ISA +10	ISA +20	ISA +30	ISA +40
SL	15.0	GR	1100	1171	1218	1266	1313	1360	1407	1454	1502	1549
		D50	1928	2028	2095	2162	2230	2298	2366	2435	2504	2573
2000	11.0	GR	1164	1240	1291	1341	1392	1443	1494	1545	1595	1646
		D50	2017	2125	2197	2269	2342	2415	2489	2562	2636	2859
4000	7.1	GR	1231	1313	1368	1423	1477	1532	1587	1641	1696	1751
		D50	2113	2229	2307	2385	2463	2542	2621	2700	2779	2859
6000	3.1	GR	1304	1392	1451	1510	1569	1628	1687	1746	1805	1864
		D50	2217	2342	2425	2510	2594	2679	2764	2849	2935	3021
8000	-0.8	GR	1381	1477	1540	1604	1667	1731	1795	1858	1922	1985
		D50	2329	2463	2554	2645	2736	2827	2919	3011	3103	3196
10000	-4.8	GR	1494	1599	1669	1739	1809	1879	1949	2019	2089	2159
		D50	2498	2647	2747	2847	2947	3048	3149	3250	3352	3454

5.14.1.3 LANDING WEIGHT: 7,600 LB

Landing Weight: 7,600 lb, Flaps T/O											
PA (ft)	ISA Temp (ºC)	Dist (ft)	Temperature (ºC)								
			ISA -55	ISA -40	ISA -30	ISA -20	ISA -10	ISA	ISA +10	ISA +20	ISA +30	ISA +40
SL	15.0	GR	1460	1554	1616	1679	1741	1804	1867	1929	1992	2054
		D50	2661	2797	2889	2981	3073	3166	3260	3353	3447	3541
2000	11.0	GR	1543	1644	1711	1778	1846	1913	1980	2048	2115	2182
		D50	2784	2931	3029	3128	3228	3327	3428	3528	3629	3730
4000	7.1	GR	1632	1741	1814	1886	1959	2031	2103	2176	2248	2321
		D50	2917	3075	3182	3288	3395	3503	3611	3719	3827	3936
6000	3.1	GR	1728	1846	1924	2002	2080	2158	2236	2314	2392	2470
		D50	3061	3232	3346	3461	3577	3692	3809	3925	4043	4160
8000	-0.8	GR	1831	1958	2042	2126	2211	2295	2379	2464	2548	2632
		D50	3217	3401	3525	3649	3774	3899	4024	4150	4276	4403
10000	-4.8	GR	1981	2120	2213	2306	2399	2492	2585	2678	2770	2863
		D50	3453	3657	3793	3930	4067	4205	4343	4482	4622	4761

5.14.2 FLAPS FULL

5.14.2.1 LANDING WEIGHT: 5,600 LB

Landing Weight: 5,600 lb, Flaps FULL												
PA (ft)	ISA Temp (ºC)	Dist (ft)	Temperature (ºC)									
			ISA -55	ISA -40	ISA -30	ISA -20	ISA -10	ISA	ISA +10	ISA +20	ISA +30	ISA +40
SL	15.0	GR	558	594	618	642	666	690	714	738	762	786
		D50	1032	1081	1114	1147	1180	1213	1246	1280	1314	1347
2000	11.0	GR	590	629	655	680	706	732	758	784	809	835
		D50	1074	1127	1162	1197	1233	1268	1304	1340	1377	1413
4000	7.1	GR	625	666	694	722	749	777	805	832	860	888
		D50	1120	1176	1214	1252	1290	1329	1367	1406	1445	1484
6000	3.1	GR	662	706	736	766	796	826	856	886	916	946
		D50	1169	1230	1271	1312	1353	1394	1436	1478	1519	1562
8000	-0.8	GR	701	749	781	814	846	878	910	942	975	1007
		D50	1222	1288	1332	1376	1420	1465	1510	1555	1600	1645
10000	-4.8	GR	758	812	847	883	918	954	989	1025	1060	1096
		D50	1306	1378	1427	1476	1524	1574	1623	1672	1722	1772

5.14.2.2 LANDING WEIGHT: 6,600 LB

Landing Weight: 6,600 lb, Flaps FULL												
PA (ft)	ISA Temp (ºC)	Dist (ft)	Temperature (ºC)									
			ISA -55	ISA -40	ISA -30	ISA -20	ISA -10	ISA	ISA +10	ISA +20	ISA +30	ISA +40
SL	15.0	GR	776	826	859	892	926	959	992	1026	1059	1092
		D50	1493	1562	1609	1655	1702	1750	1797	1845	1893	1942
2000	11.0	GR	820	874	910	945	981	1017	1053	1089	1124	1160
		D50	1554	1628	1678	1729	1779	1830	1881	1933	1984	2036
4000	7.1	GR	868	926	964	1003	1041	1080	1119	1157	1196	1234
		D50	1621	1701	1755	1809	1863	1918	1973	2029	2084	2140
6000	3.1	GR	919	981	1022	1064	1105	1147	1189	1230	1272	1313
		D50	1692	1779	1837	1895	1954	2013	2072	2132	2191	2251
8000	-0.8	GR	974	1041	1086	1130	1175	1220	1265	1310	1354	1399
		D50	1771	1864	1926	1989	2053	2116	2180	2245	2309	2374
10000	-4.8	GR	1053	1127	1176	1225	1275	1324	1373	1423	1472	1521
		D50	1892	1995	2064	2133	2203	2273	2343	2414	2485	2556

5.14.2.3 LANDING WEIGHT: 7,600 LB

Landing Weight: 7,600 lb, Flaps FULL												
PA (ft)	ISA Temp (ºC)	Dist (ft)	Temperature (ºC)									
			ISA -55	ISA -40	ISA -30	ISA -20	ISA -10	ISA	ISA +10	ISA +20	ISA +30	ISA +40
SL	15.0	GR	1028	1095	1139	1183	1227	1271	1315	1359	1403	1447
		D50	2051	2145	2208	2271	2335	2399	2464	2529	2594	2659
2000	11.0	GR	1087	1158	1206	1253	1301	1348	1395	1443	1490	1538
		D50	2136	2237	2305	2373	2442	2511	2580	2650	2720	2790
4000	7.1	GR	1151	1228	1279	1330	1381	1432	1483	1534	1585	1636
		D50	2229	2338	2411	2484	2558	2633	2707	2782	2858	2934
6000	3.1	GR	1218	1301	1356	1411	1466	1521	1576	1631	1686	1741
		D50	2329	2446	2525	2604	2684	2764	2844	2925	3007	3088
8000	-0.8	GR	1290	1379	1439	1498	1558	1617	1676	1736	1795	1855
		D50	2437	2563	2648	2734	2820	2906	2993	3081	3168	3256
10000	-4.8	GR	1396	1495	1560	1626	1691	1756	1822	1887	1953	2018
		D50	2606	2746	2840	2934	3029	3124	3220	3317	3413	3510

This Page Intentionally Left Blank

SECTION 6

WEIGHT AND BALANCE

TABLE OF CONTENTS

6.1 GENERAL 3
6.2 AIRPLANE WEIGHING PROCEDURES 3
6.3 BAGGAGE 3
6.4 WEIGHT AND BALANCE 4
6.4.1 CALCULATING CENTER OF GRAVITY (CG) 5
6.4.2 WEIGHT AND BALANCE MOMENT LIMIT 6
6.4.3 FUEL MOMENT ARM 7

This Page Intentionally Left Blank

6.1 GENERAL

This section provides the procedures for determining the basic empty weight and balance for this airplane.

WARNING

THE PILOT OF THIS AIRPLANE IS RESPONSIBLE FOR ENSURING THAT ALL BAGGAGE IS PROPERLY SECURED IN THE BAGGAGE COMPARTMENT AND THE AIRPLANE IS PROPERLY LOADED WITHIN WEIGHT AND BALANCE LIMITATIONS.

6.2 AIRPLANE WEIGHING PROCEDURES

Refer to the latest revision of the Epic E1000 Maintenance Manual, p/n SK05000000 for weighing and balancing procedures.

NOTE

Refer to the Inspection Record for this airplane for a list of all equipment installed and the subsequent airplane total weight.

6.3 BAGGAGE

The baggage compartment for this airplane is located behind the aft passenger seats and in front of the pressure bulkhead. Maximum baggage capacity is 200 lb (90 kg).

Center the baggage load distribution evenly within the baggage compartment then secure it using the cargo net.

6.4 WEIGHT AND BALANCE

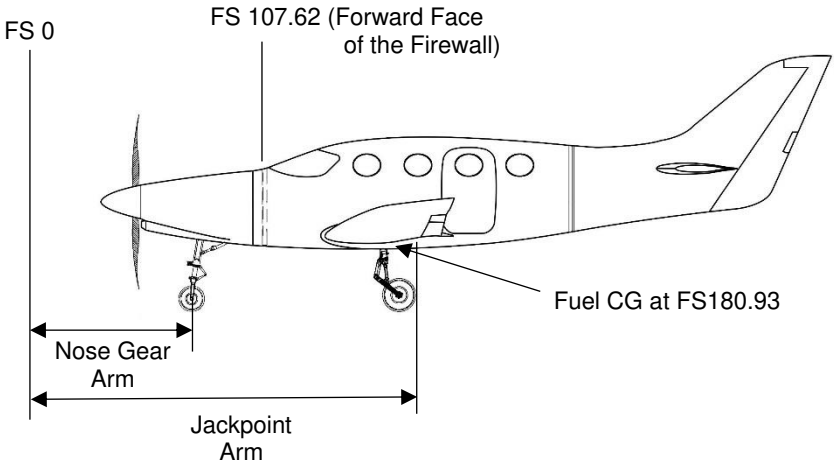

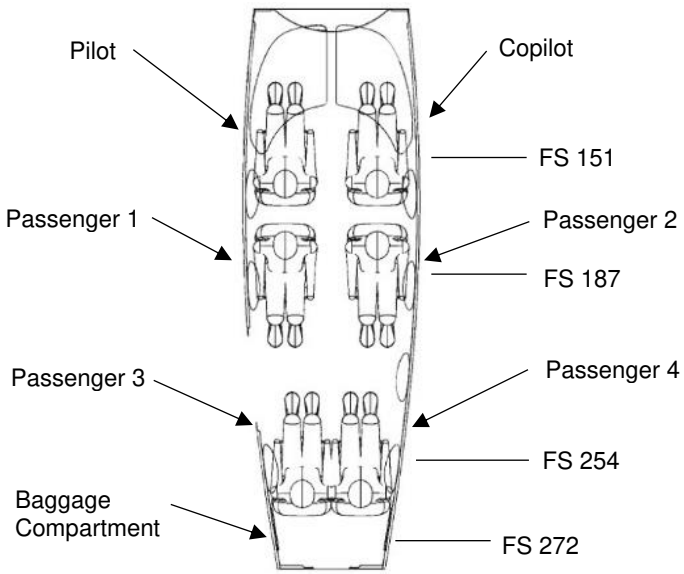

6.4.1 CALCULATING CENTER OF GRAVITY (CG)

(1) Enter measured weights and distances into the following table.

(2) Determine the moment of each item using the formula, Moment = Net Weight x Arm.

(3) Add the values in the appropriate columns to determine the total CG weight and moment.

(4) Determine the location of CG aft of the Reference Datum using the formula, CG = Total Moment/Total Weight.

Weight and Balance Worksheet				
Epic E1000 GX S/N _____ N#_____ Date _____				
Max Gross Weight: 8,000 lb				
Reference Datum: 107.62 inches forward of the forward face of the firewall				
	Weight (lb)	Arm (in)	Moment (in-lb)	
Airplane Empty Weight				Empty CG
Fuel		180.93		
Pilot		151		
Copilot		151		
Passenger 1		187		
Passenger 2		187		
Passenger 3		254		
Passenger 4		254		
Baggage		272		
Total Airplane Weight				Loaded CG
Empty weight of the airplane includes unusable fuel, oil, hydraulic fluid, upholstery, seats, panels, etc.				

NOTE

This sample worksheet is not to be used for flight planning purposes.

Weight and Balance Worksheet				
Epic E1000 S/N _*SAMPLE*_ N#_*SAMPLE*_ Date ___*N/A*___				
Max Gross Weight: 8,000 lb				
Reference Datum: 107.62 inches forward of the forward face of the firewall				
	Weight (lb)	Arm (in)	Moment (in-lb)	
Airplane Empty Weight	5,020	163.74	821,975	Empty CG
Fuel	1,806	180.93	326,760	
Pilot	140	151	21,140	
Copilot	180	151	27,180	
Passenger 1	120	187	22,440	
Passenger 2		187		
Passenger 3		254		
Passenger 4	100	254	25,400	
Baggage	200	272	54,400	
Total Airplane Weight	7,566	171.73	1,299,295	Loaded CG
Empty weight of the airplane includes unusable fuel, oil, hydraulic fluid, upholstery, seats, panels, etc.				

6.4.2 WEIGHT AND BALANCE MOMENT LIMIT

Weight	Forward Limit Distance Aft of Datum	Rearward Limit Distance Aft of Datum
8,000 lb (3,629 kg)	172.8 in (438.9 cm)	173.5 in (440.7 cm)
7,600 lb (3,447 kg)	169.4 in (430.3 cm)	--
5,700 lb (2,585 kg)	163.0 in (414.0 cm)	172.0 in (436.9 cm)
5,000 lb (2,268 kg)	163.0 in (414.0 cm)	169.9 in (431.5 cm)

NOTES

Straight line variation between points indicated.

The Reference Datum is located 107.62 inches forward of the forward face of the firewall.

6.4.3 FUEL MOMENT ARM

Useable Fuel W&B			
Total Qt. (gal)	**Total Wt. (lbs)**	**Arm. (in.)**	**Moment (in.-lbs)**
10	67	178.2	12012
20	135	178.0	23995
30	202	177.9	35964
40	270	178.0	47985
50	337	178.0	60000
60	404	178.1	72028
70	472	178.2	84058
80	539	178.2	96078
90	607	178.2	108111
100	674	178.3	120204
110	741	178.5	132312
120	809	178.5	144410
130	876	178.7	156535
140	944	178.8	168711
150	1011	178.9	180827
160	1078	179.1	193097
170	1146	179.2	205357
180	1213	179.4	217644
190	1281	179.5	229922
200	1348	179.7	242279
210	1415	179.9	254638
220	1483	180.1	267056
230	1550	180.3	279499
240	1618	180.5	292012
250	1685	180.7	304460
260	1752	180.9	317069
264	1779	181.1	322191

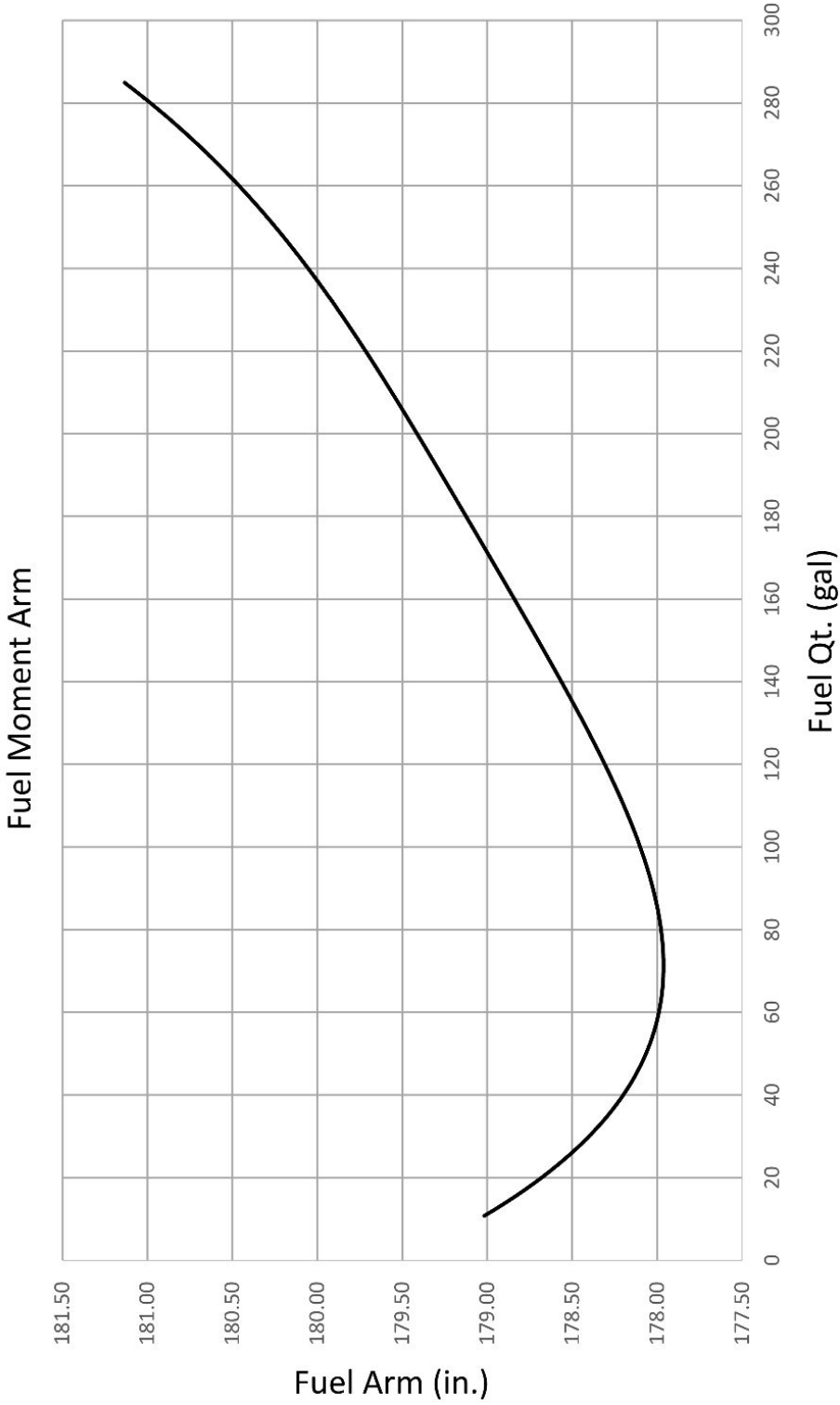
Fuel Moment Arm
181.50
181.00
180.50
180.00
179.50
179.00
178.50
178.00
177.50
Fuel Arm (in.)
0
20
40
60
80
100
120
140
160
180
200
220
240
260
280
300
Fuel Qt. (gal)

SECTION 7

DESCRIPTION

TABLE OF CONTENTS

7.1 GENERAL 3
7.2 AIRFRAME 3
7.2.1 WINGS 3
7.2.2 BELLY PANELS 4
7.2.3 AILERONS 4
7.2.4 FLAPS 4
7.2.5 EMPENNAGE 4
7.2.6 WINDSHIELD AND WINDOWS 4
7.3 FURNISHINGS 5
7.3.1 INSTRUMENT PANEL 5
7.3.2 GLARE SHIELD 15
7.3.3 DOOR 16
7.3.4 DOOR SEAL SYSTEM 16
7.3.5 EMERGENCY EXIT 17
7.3.6 SEATS, BELTS, AND HARNESSES 18
7.4 FLIGHT CONTROLS 21
7.4.1 AILERONS 22
7.4.2 ELEVATOR 24
7.4.3 RUDDER 26
7.4.4 TRIM OVERRIDE 29
7.4.5 FLAPS 29
7.5 FUEL SYSTEM 32
7.5.1 FUEL TANKS 33
7.5.2 FUEL SELECTOR AND SHUTOFF VALVE 33
7.5.3 FUEL FILTER 34
7.5.4 ENGINE-START FUEL PURGE SYSTEM 34
7.5.5 ENGINE-SHUTDOWN FUEL PURGE SYSTEM 34
7.6 LANDING GEAR 36
7.6.1 WHEELS 38
7.6.2 BRAKES 39
7.6.3 WEIGHT ON WHEELS SWITCH 40
7.6.4 HYDRAULIC SYSTEM 41
7.6.5 EMERGENCY EXTENSION SYSTEM 43
7.6.6 LANDING GEAR CONTROL 43
7.6.7 LANDING GEAR POSITION INDICATION 44
7.7 POWERPLANT 45
7.7.1 ENGINE CONTROLS 45
7.7.2 ENGINE INDICATING 48

7.7.3 ENGINE FUEL 48
7.7.4 ENGINE OIL 49
7.7.5 TORQUE LIMITER 50
7.7.6 ENGINE START 50
7.7.7 IGNITION 51
7.7.8 ENGINE AIRFLOW AND COMBUSTION 51
7.7.9 AIR INDUCTION 52
7.7.10 ENGINE ACCESSORIES 52
7.8 PROPELLER 53
7.9 ELECTRICAL SYSTEM 53
7.9.1 POWER SOURCES 55
7.9.2 POWER DISTRIBUTION 57
7.10 LIGHTING 63
7.10.1 EXTERIOR LIGHTING 63
7.10.2 INTERIOR LIGHTING 64
7.11 ENVIRONMENTAL CONTROL SYSTEM 66
7.11.1 TEMPERATURE-CONTROLLED BLEED AIR SYSTEM 68
7.11.2 CABIN PRESSURIZATION 70
7.11.3 AIR CONDITIONING 71
7.11.4 GROUND FRESH AIR 71
7.12 OXYGEN SYSTEM 71
7.13 PITOT/STATIC SYSTEM 73
7.14 ICE PROTECTION 74
7.14.1 PROPELLER HEAT 74
7.14.2 PITOT AND SPS LIFT TRANSDUCER HEAT 75
7.14.3 WING AND HORIZONTAL STABILIZER DE_ICE BOOTS 76
7.14.4 WINDSHIELD DE_ICE SYSTEM 77
7.14.5 ENGINE AIR INLET ICE PROTECTION 77
7.14.6 ICE DETECTOR 77
7.15 STALL PREVENTION SYSTEM (SPS) 78
7.16 AIRFLOW MODIFICATION DEVICES 79
7.17 STATIC WICKS 80
7.18 FIRE EXTINGUISHER 80
7.19 AVIONICS 80
7.19.1 GARMIN G1000 NXi INTEGRATED FLIGHT DECK 80
7.19.2 GARMIN GFC 700 AUTOMATIC FLIGHT CONTROL SYSGTEM (AFCS) 80
7.19.3 ADS-B 84
7.19.4 L3 AVIONICS ESI-500 ELECTRONIC STANDBY INSTRUMENT SYSTEM 85
7.20 EMERGENCY LOCATOR TRANSMITTER 85
7.20.1 ELT SELF TEST 86
7.21 OPTONAL EQUIPMENT 86

7.1 GENERAL

This section provides a description of and operating procedures for the Epic E1000 airplane and its systems. Optional equipment is also described in this section that may not be installed on the airplane.

Refer to the latest revision of the Garmin G1000 NXi Pilot's Guide (p/n 190-02289-XX, where X can be any digit from 0 to 9) for a complete description and operation procedures for the Garmin G1000 NXi system and its components.

Refer to Section 9 SUPPLEMENTS, of this Pilot's Operating Handbook for description and operation procedures for optional systems and equipment that are not discussed in Section 7 DESCRIPTION.

7.2 AIRFRAME

The Epic Model E1000 is a six-seat, pressurized single-engine turbine-powered propeller airplane.

The entire airplane structure is carbon composite including the wings, aileron, elevator, rudder, and flaps. The structure is of semi-monocoque design equipped with a retractable tricycle landing gear.

The fuselage under the forward and middle seats has an integral spar saddle which is engineered and strengthened to support the wings.

The airplane cabin or pressure vessel is the cockpit, passenger cabin, and baggage compartment between the firewall and the aft pressure bulkhead. When pressurized the airplane has a 34,000 ft pressure altitude (FL340) ceiling.

The airplane is not certified for flight into known icing but has pneumatic de-ice boots on the wing and horizontal stabilizer, a bleed air windshield de-ice, and electric de-ice boots on the propeller.

Entry and exit of the cabin are through a door equipped with three integral steps on the left side of the fuselage.

An emergency exit on the right side of the fuselage provides an additional means of exit in case of emergency.

The baggage compartment is accessed and located in the pressurized cabin area behind the aft passenger seats and in front of the pressure bulkhead.

7.2.1 WINGS

The wings are of semi-monocoque design with an internal forward spar, aft spar, and ribs. Bays formed by the spars and ribs provide "wet wing" fuel tanks.

The wings are mounted in the lower center of the fuselage with the wing spars passing through the spar saddle and attached using four pins.

7.2.2 BELLY PANELS

The center portions of the wings and fuselage within the spar saddle contain the flaps motor, rudder and elevator cables, cable pulleys, and hydraulic system reservoir and accumulator.

Access to these airplane components as well as the wing attachment pins is by removal of the wing's belly panels and gear well liners.

7.2.3 AILERONS

Ailerons are attached to the aft spar of both wings outboard of the flaps using three hinges. They are mechanically controlled through a system of cables, pulleys, bellcranks, and rod arms.

The left-hand aileron has a trim tab that is positioned by an electrically activated actuator.

7.2.4 FLAPS

Each wing has a long-span double-slotted flap attached to the aft wing spar inboard of the ailerons using three hinges. The flaps are positioned using an electric screw drive flaps motor that rotates torque tubes attached to the end of the flaps. The flaps motor is attached to the underside of the spar saddle between the wings and within the fuselage. Access is through the belly panel on the underside of the fuselage.

A flap control on the instrument panel allows the pilot to set the flaps into one of three positions: UP (0°), T/O (12°), and FULL (43°).

7.2.5 EMPENNAGE

The empennage of the airplane consists of a horizontal stabilizer equipped with elevators, a vertical stabilizer, and a rudder.

The left-hand elevator and the rudder both have trim tabs positioned using electrically activated actuators.

7.2.6 WINDSHIELD AND WINDOWS

The windshield and the windows on this airplane are made of a layer of polyvinyl butyral sandwiched between two layers of stretched acrylic. They are bonded to joggles in the fuselage on the inside of the cockpit, the passenger cabin, the door, and the emergency exit. All the windows are fixed and cannot be opened.

Bleed air ice protection is provided for the pilot's windshield.

CAUTION

DO NOT USE SUN SHADES ON THE INTERIOR OF THE WINDSHIELD OR WINDOWS. THEY CAUSE THE WINDSHIELD OR WINDOWS TO BECOME TOO HOT AND CAN CAUSE IRREPARABLE DAMAGE.

7.3 FURNISHINGS

7.3.1 INSTRUMENT PANEL

The instrument panel supports and contains the instruments required for monitoring, navigating, and controlling all aspects of the airplane in-flight and on the ground.

Secondary indications are shown on the Wedge annunciation panels located in the upper left and right sides of the instrument panel.

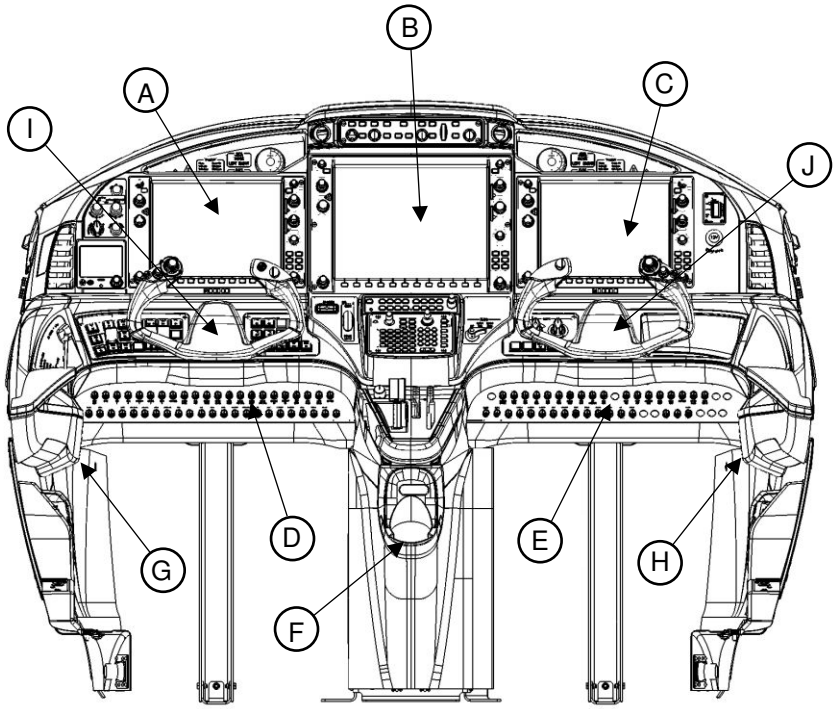

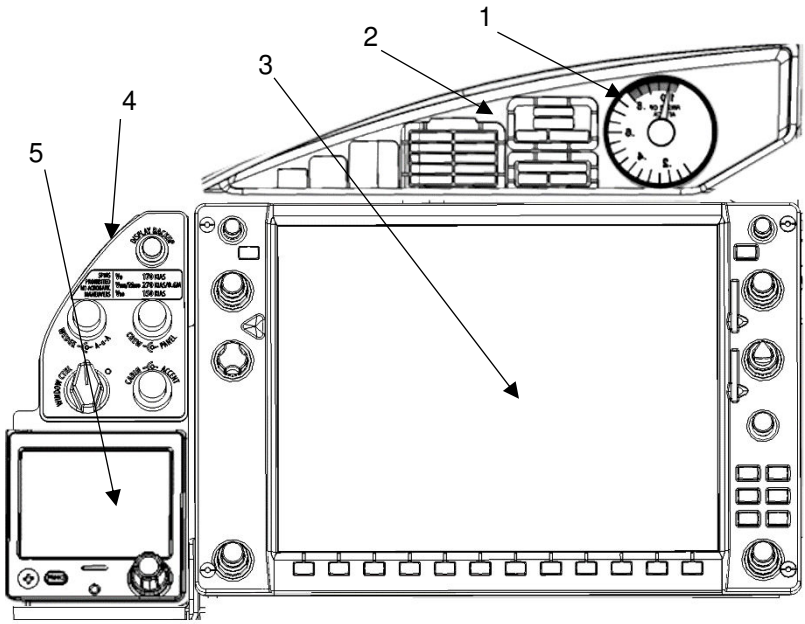

Legend

1. Angle of Attack (AOA) Indicator
2. Annunciation Panel (Wedge)
3. GDU 1050 PFD 1
4. Switch Light Dimmer and Display Reversion Panel
5. ESI-500 Standby Instruments

DETAIL (A)

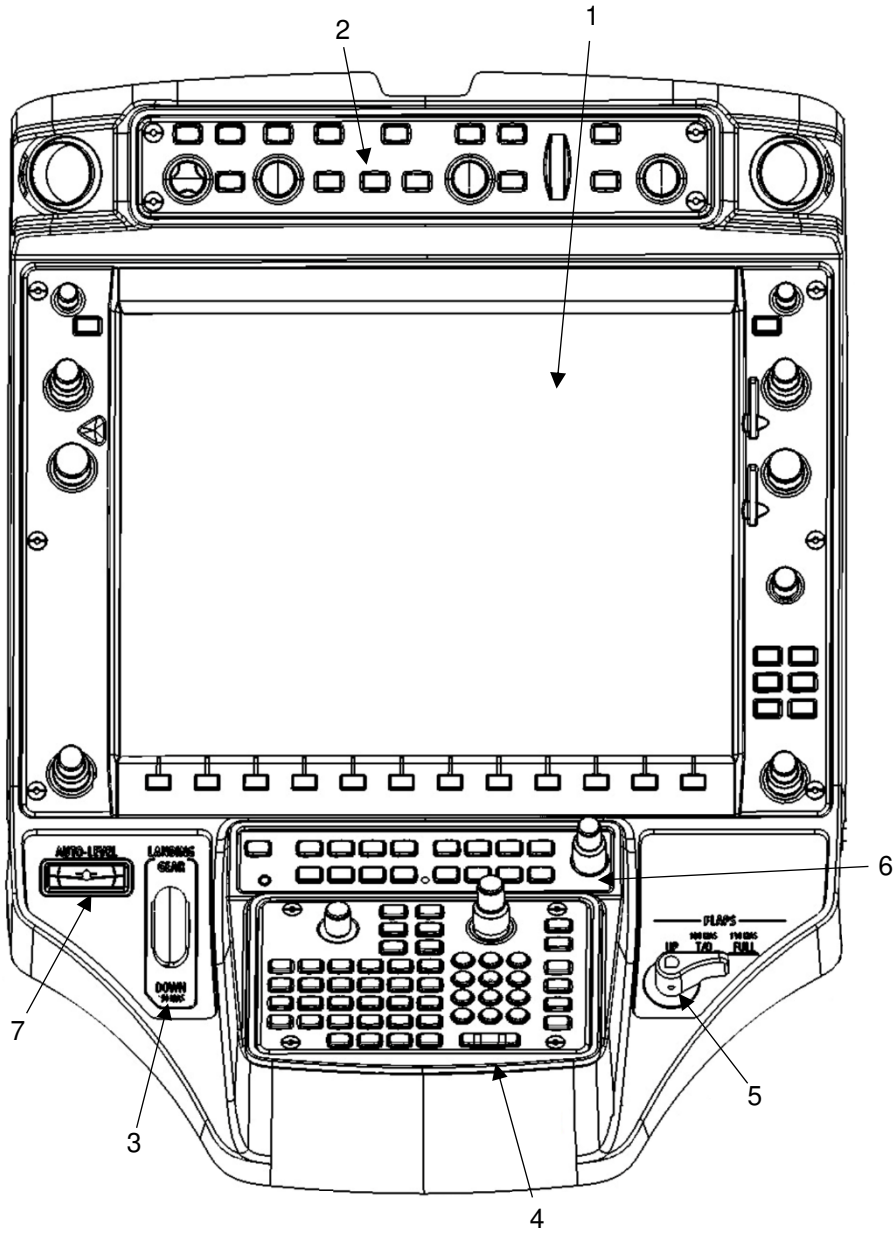

Legend

1. GDU 1250 MFD
2. GMC 710 Mode Controller
3. Landing Gear Control
4. GCU 477 Flight Management System Controller
5. Flap Control
6. GMA 350 Audio Panel
7. Auto-Level Button

DETAIL (B)

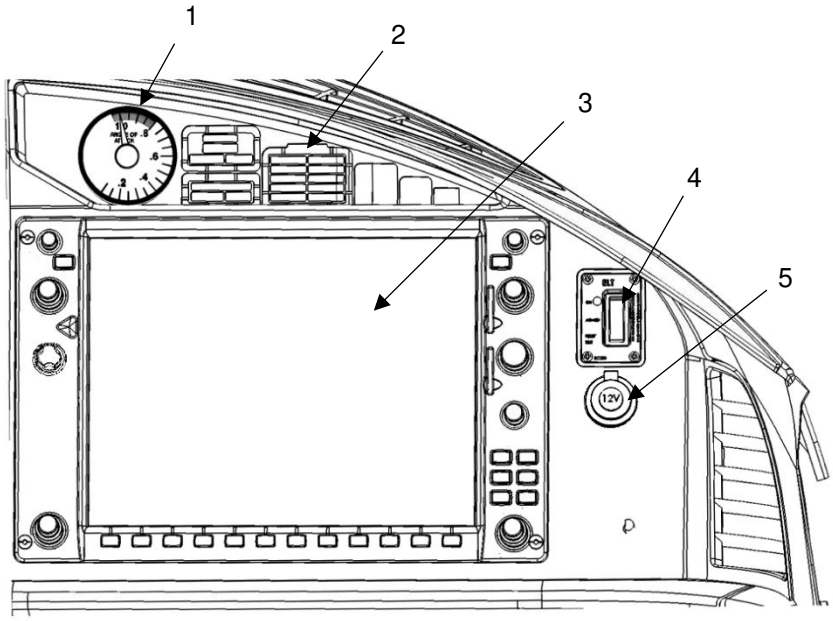

Legend

1. Angle of Attack (AOA) Indicator
2. Annunciation Panel (Wedge)
3. GDU 1050 PFD 2
4. ELT Control Panel
5. 12V Receptacle with Cover

DETAIL C

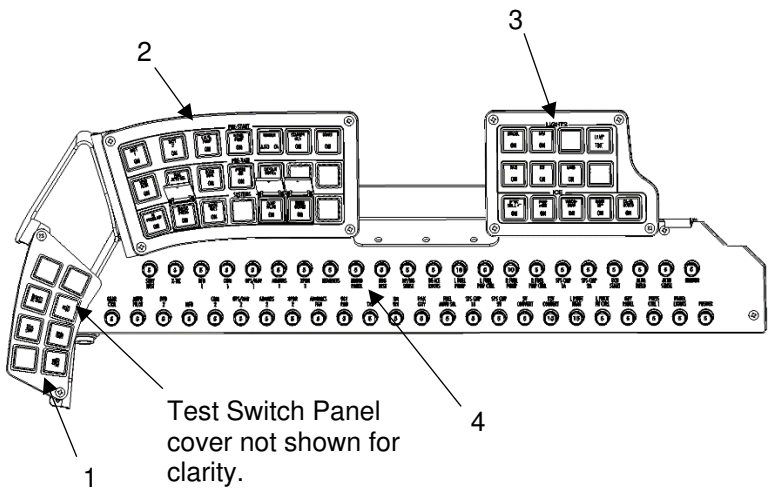

Legend

1. Test Switch Panel (with cover)
2. Pre-Start, Pre-Taxi, and Systems Switch Panel
3. Lights and De-Ice Protection Switch Panel
4. Left-Side (Pilot) Circuit Breaker Panel

DETAIL D

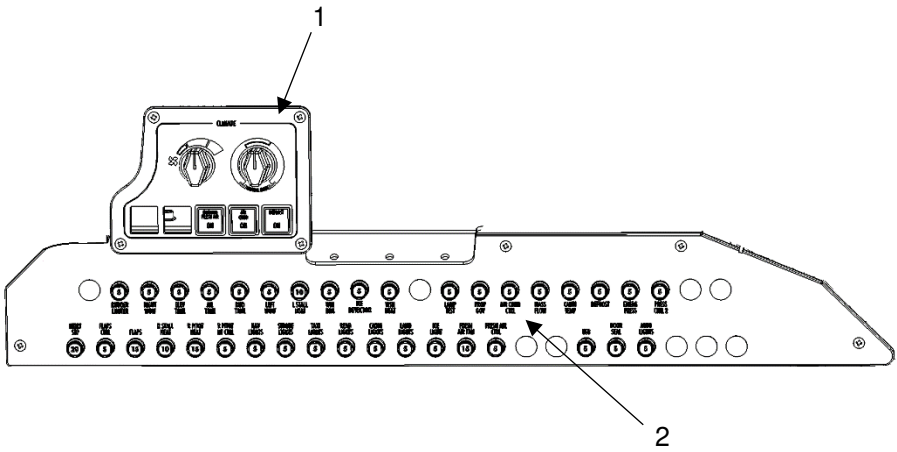

Legend

1. Climate Control Panel
2. Right-Side (Copilot) Circuit Breaker Panel

DETAIL (E)

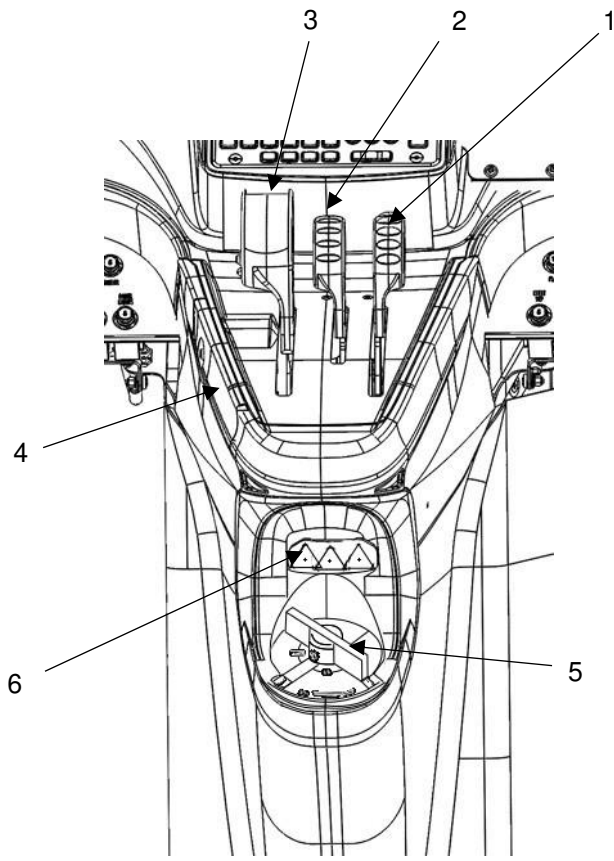

Legend

1. Condition Control Lever (COND)
2. Propeller Control Lever (PROP)
3. Power Lever (POWER)
4. Manual Override Lever (MAN OVRD)
5. Fuel Tank Selector
6. Control Lever Friction Adjustments

DETAIL (F)

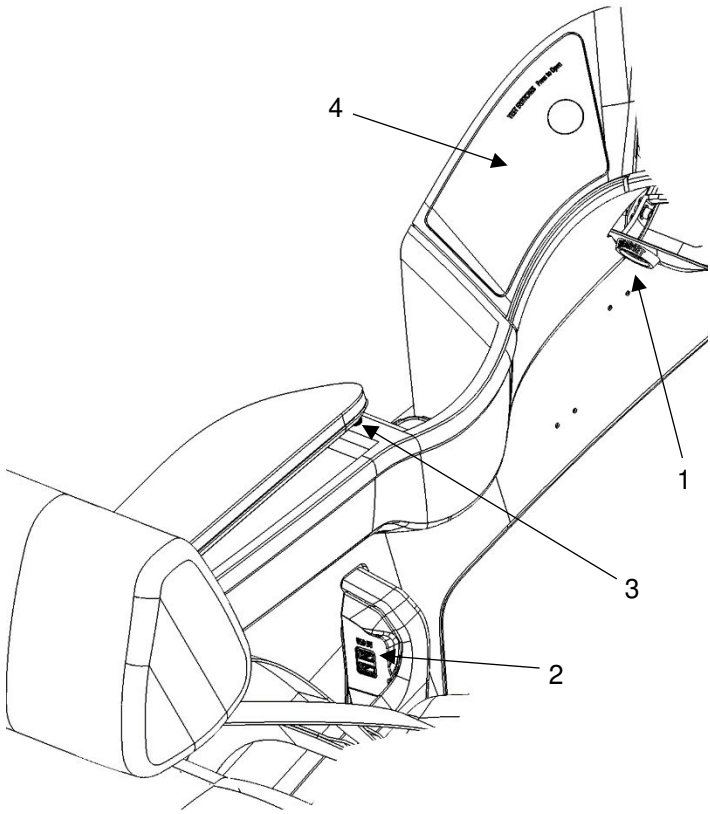

Legend

1. Headset Jack
2. USB Port, 2 Ea.
3. Pilot Auxiliary Push-To-Talk (PTT) Switch (under armrest)
4. Test Switches (under cover)

DETAIL (G)

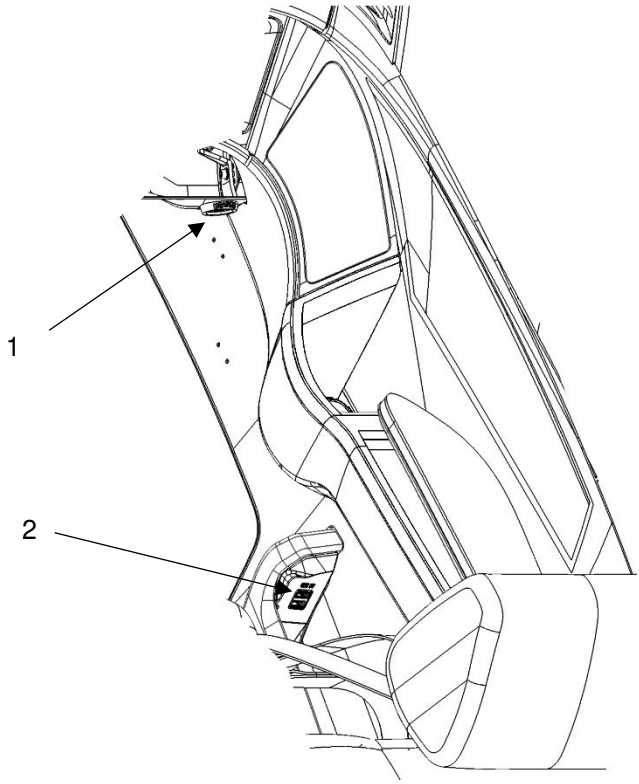

Legend

1. Headset Jack
2. USB Port, 2 Ea.

DETAIL (H)

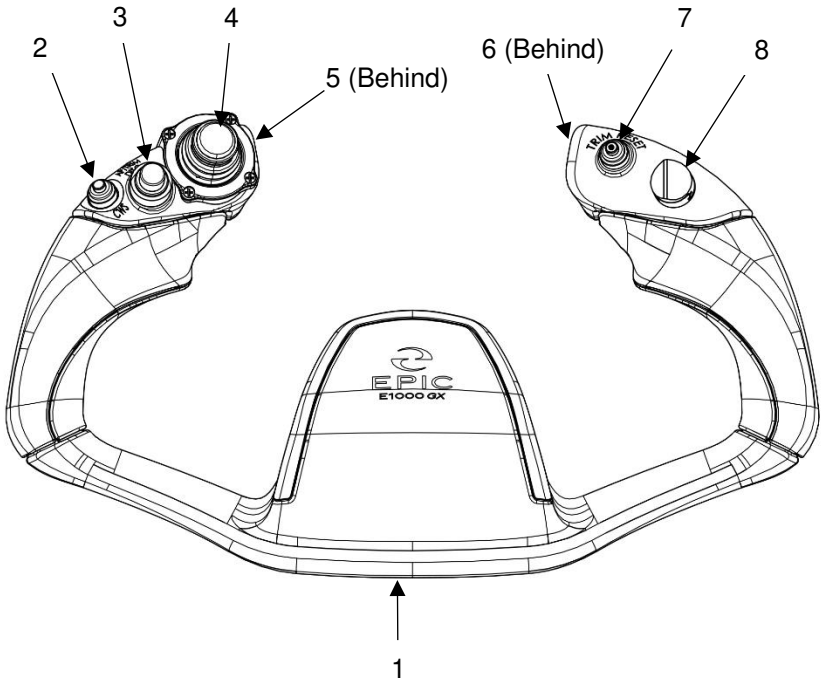

Legend

1. Pilot Control Yoke
2. Control Wheel Steering (CWS)
3. Autopilot/Trim Disconnect (AP/TRIM DISC)
4. Elevator/Rudder Trim (ELV/RUD)
5. Push-To-Talk (PTT) Switch
6. Traffic Awareness System Mute (TAS MUTE)
7. Trim Reset (TRIM RESET)
8. Aileron Trim (AIL)

DETAIL (I)

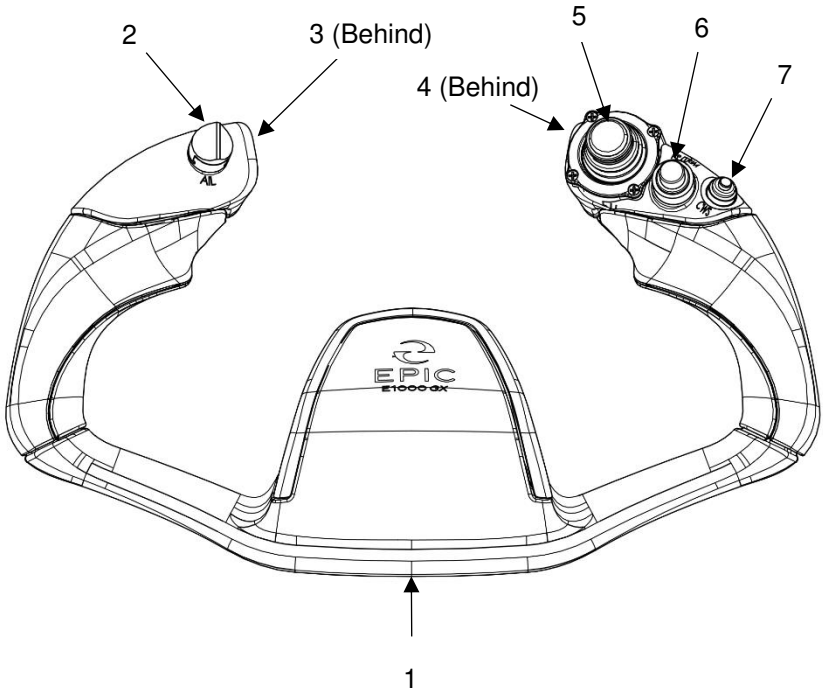

Legend

1. Copilot Control Yoke
2. Aileron Trim (AIL)
3. Traffic Awareness System (TAS MUTE)
4. Push-To-Talk (PTT) Switch
5. Elevator/Rudder Trim (ELV/RUD)
6. Autopilot/ Trim Disconnect (AP/TRIM DISC)
7. Control Wheel Steering (CWS)

DETAIL (J)

7.3.2 GLARE SHIELD

A glare shield is attached to the top of the instrument panel. The glare shield covers the width of the instrument panel and has a slider that may be extended approximately six inches toward the cabin. Extending the glare shield minimizes reflections on the windshield during night operations.

Magnets attached to the underside of the glare shield slider travel along two metal tracks to hold the slider at the desired extension.

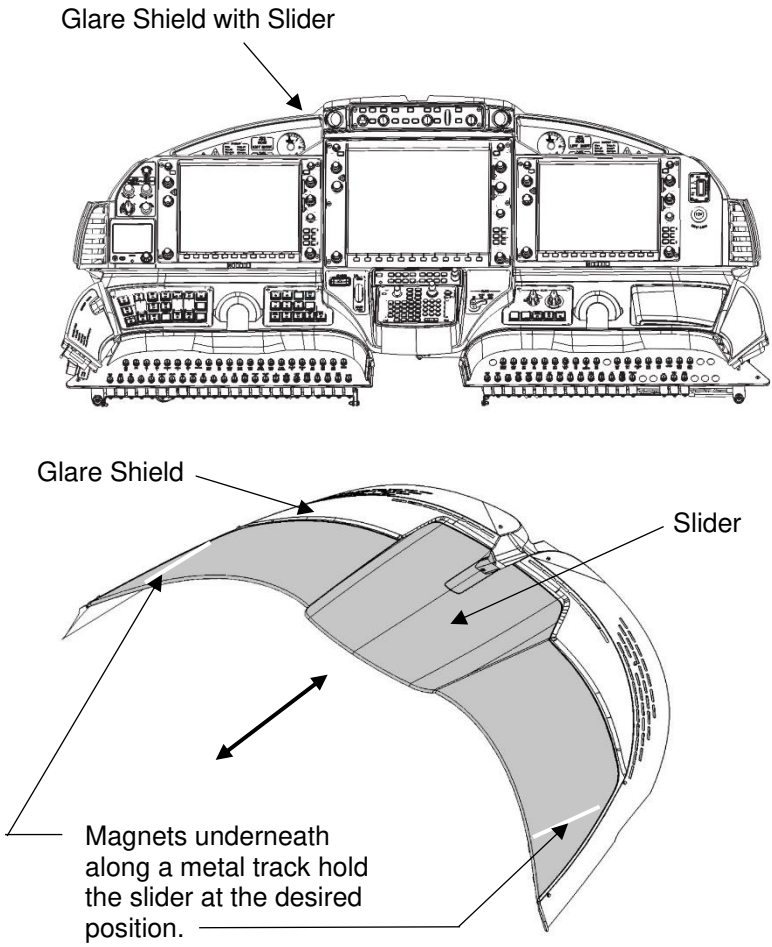

7.3.3 DOOR

Normal entry and exit from the airplane is through the cabin door located aft of the left wing. This door is hinged at the bottom and opens outward from the fuselage. It is supported by cables and pneumatic struts on each side of the door. There are three integral steps.

A combination of push rods and eight pins firmly latch and secure the door in the closed position.

Each door pin has a microswitch to detect if the door is properly latched and will initiate the DOOR UNLOCKED Warning in the instrument panel if the door is unlatched.

To open the door from the outside, push the button, rotate the lever clockwise to unlatch the door, and return the lever to its stowed position. The button unlocks the door and releases the pressure in the inflatable door seal. The lever disengages the latching pins.

To close the door from the outside, hold the door against the door frame, push the button, rotate the lever counterclockwise to latch the door, and return the lever to its stowed position.

To open the door from the inside, pull the T-handle then rotate the latch counterclockwise. The T-handle unlocks the door and releases the pressure in the inflatable door seal. The lever disengages the latching pins.

To close the door from the inside, pull the door up into the door frame, pull the T-handle, rotate the latch clockwise half way, release the T-handle, then continue rotating the latch clockwise until the T-handle snaps into place indicating that the door latches are locked in place.

7.3.4 DOOR SEAL SYSTEM

An inflatable and a passive seal around the door frame seal the gap between the door and the frame for cabin pressurization.

The inflatable seal is inflated using P3 air and is operated using the DOOR SEAL switch in the PRE-TAXI switch panel. The door seal is designed to stay inflated in the event of a loss of electrical power.

A valve in the door latch releases the pressure in the inflatable seal when the latch is unlocked, either from inside or outside of the airplane.

The passive door seal uses differential cabin pressure to function. The cabin must be de-pressurized in order to open the door.

7.3.5 EMERGENCY EXIT

An emergency exit is located directly across from the cabin door. This exit completely disengages from the airplane when opened.

The emergency exit may be locked when the airplane is parked on the ground using the Emergency Exit Locking Pin inserted into a placarded hole on the cabin side of the exit. This pin is placarded with a "Remove Before Flight" tag.

CAUTION

THE EMERGENCY EXIT LOCKING PIN MUST BE REMOVED BEFORE FLIGHT SO THE EXIT CAN BE OPENED IN AN EMERGENCY.

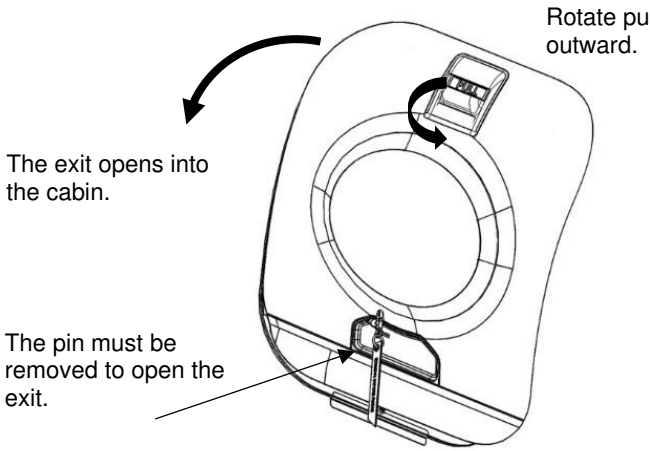

INSIDE THE AIRPLANE

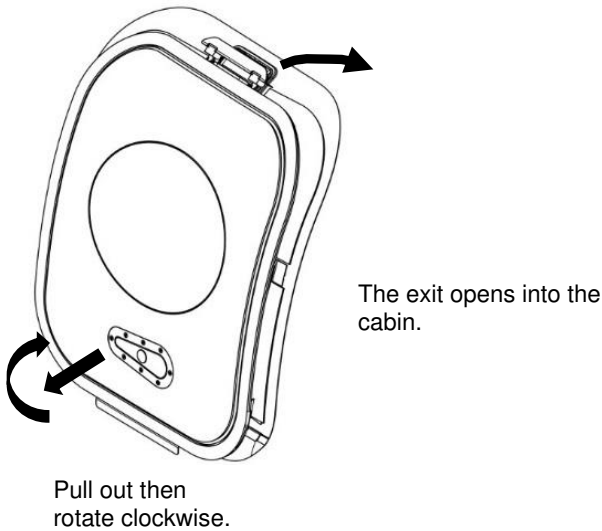

OUTSIDE THE AIRPLANE

7.3.6 SEATS, BELTS, AND HARNESSES

7.3.6.1 CREW SEATS

This airplane has two crew seats, pilot and copilot. A passenger may occupy the copilot seat.

The pilot and copilot seats are mounted to rails attached to the spar saddle of the fuselage. Longitudinal position, seat height, lumbar support, seat back tilt, and the headrests are adjustable.

Longitudinal position of the seats is controlled by pulling upwards on the lever bar under the front of the seat to unlock the pins then sliding the seat to the desired position. Release the lever bar then move the seat back and forth slightly while pressing down on the lever bar to make sure the locking pins engage the seat rails.

Seat height is controlled by pulling the handle down then rotating the hand wheel on the inboard forward side of the seat.

Seat back tilt is controlled by rotating upwards on the lever on the inboard aft side of the seat then tilting the seat back to the desired position. Releasing the lever locks the seat back in place.

Lumbar support is controlled by rotating the hand wheel on the outboard lower side of the seatback.

The waist straps of the harnesses are adjusted by pulling on the free end of the strap to tighten, and lifting the metal tab to loosen.

The headrests height may be adjusted by pulling upwards or pushing downwards to set their supports into the desired detents.

The armrests may be raised for ease of access to the seats and for comfort.

The proper method to use the 4 point restraint system is to first attach and adjust the lap belts connectors to the rotary buckle, so the lap belts are low and tight about the occupant’s pelvis. Then the torso harness connectors must be attached to the rotary buckle and adjusted snug (not excessively tight) to the occupant’s torso.

7.3.6.2 CREW EYE REFERENCE HEIGHT

Crew Seats should be adjusted for correct Eye Reference Height. Set crew seat height such that the top glare shield surface is visible while maintaining visibility to all instruments and annunciations.

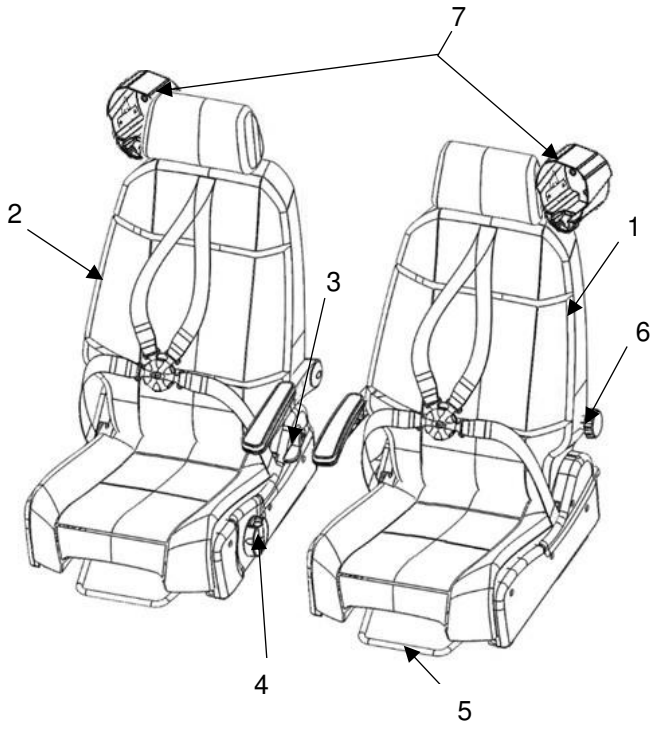

Legend

1. Pilot Seat
2. Copilot Seat
3. Seat Back Tilt Control
4. Seat Height Control
5. Longitudinal Position Control
6. Lumbar Support Control
7. Oxygen Mask Holder

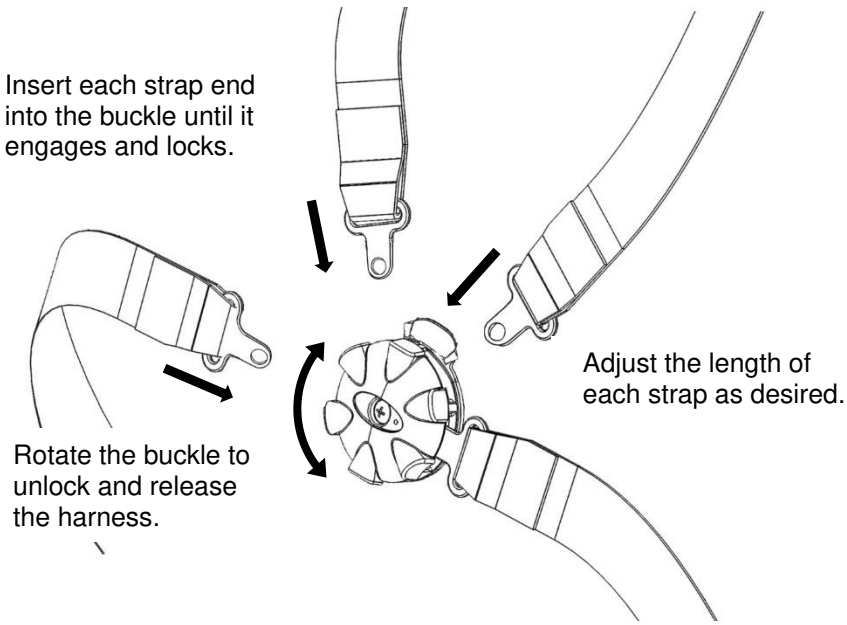

7.3.6.3 PASSENGER SEATS

This airplane has four passenger seats. Two mid row seats facing aft and two aft seats facing forward. The mid row seats are mounted to rails attached to the spar saddle of the fuselage. The aft seats are mounted to rails attached to the air conditioning evaporator and fans enclosure in the fuselage. Seat back tilt and the headrests of these seats are adjustable. The longitudinal position of these seats is fixed and not adjustable.

Seat back tilt is controlled by rotating upwards on the lever on the inboard aft side of the seat then tilting the seat back to the desired position. Releasing the lever locks the seat back in place.

The headrests height may be adjusted by pulling upwards or pushing downwards to set their supports into the desired detents.

The armrests may be raised for ease of access to the seats and for comfort.

The waist straps of the harnesses are adjusted by pulling on the free end of the strap to tighten, and lifting the metal tab to loosen.

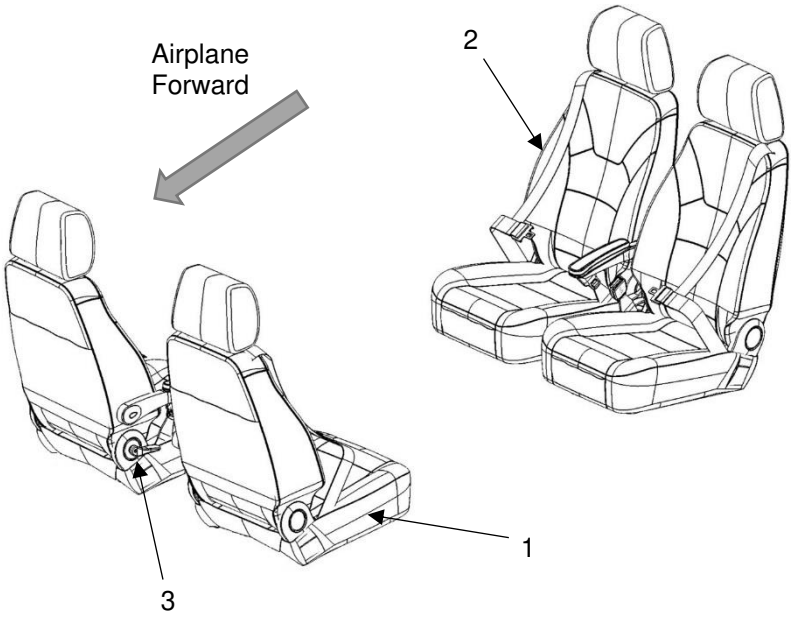

Legend

1. Mid Row Passenger Seats
2. Aft Passenger Seats
3. Seat Back Tilt Control

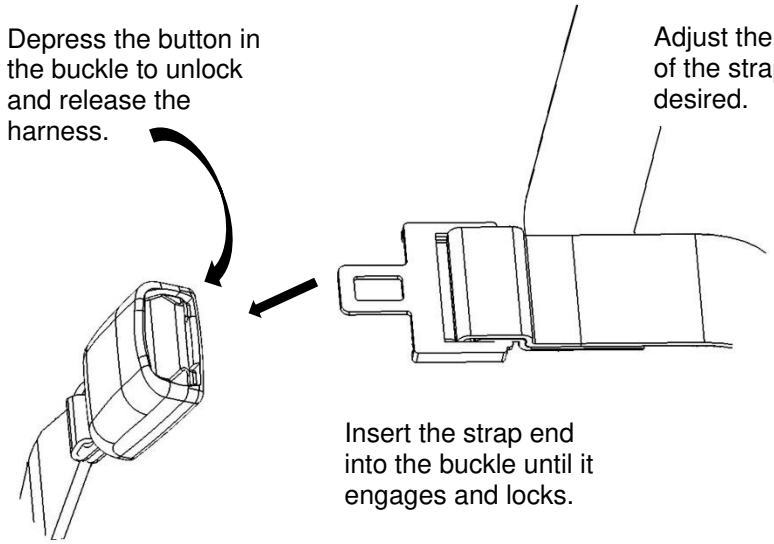

7.4 FLIGHT CONTROLS

The primary flight controls for this airplane are the ailerons, rudder, and elevator. They are controlled from either front seat using standard yoke style controls and rudder pedals.

Rudder pedals control the rudder as well as nose wheel steering and differential braking (disc brakes are installed on each of the main wheels). A linkage attaching the rudder pedals to the nose gear allows steering during taxing. The nose wheel decouples from the steering mechanism when the wheel is deflected greater than 16° ± 5° to either the right or the left. Each rudder pedal is attached to the braking system which also allows steering of the airplane during taxiing using differential braking.

Electric servos are used to provide fine trim secondary flight control on the trailing edges of the LH aileron, the elevator, and the rudder.

The high lift flight controls for this airplane are the double slotted flaps which are operated electronically by an electric motor that drives a single jack screw that rotates a torque tube. Both flaps extend and retract at the same time on the same torque tube.

7.4.1 AILERONS

Aileron deflection up is 20°. Aileron deflection down is 15.5º. Aileron trim tab deflection up or down is 17°.

Aileron trim is controlled by a toggle switch on the control yoke. Position of the trim tab is indicated by a cyan marker in the MFD EIS display.

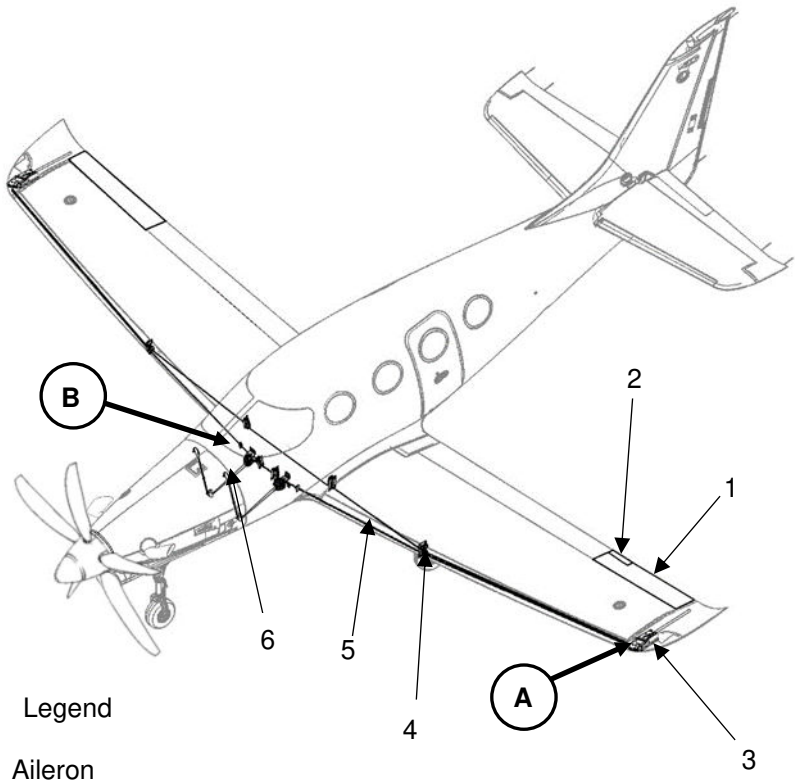

Legend

1. Aileron
2. Trim Tab
3. Bellcrank
4. Pulley
5. Cable
6. Yoke

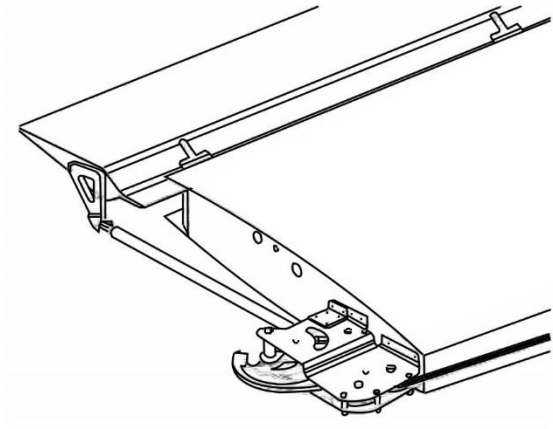

Detail A

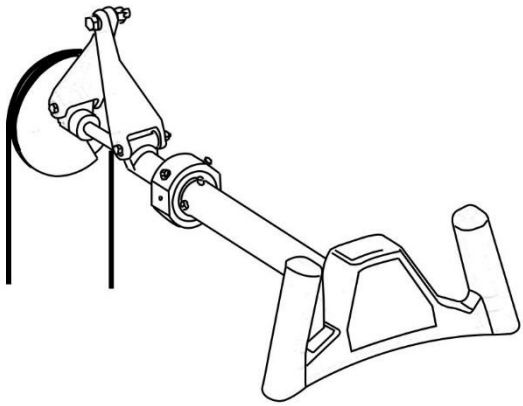

Detail B

7.4.2 ELEVATOR

Elevator deflection up is 25.6°. Elevator deflection down is 13.5°. Elevator trim tab deflection up is 7.5°. Elevator trim tab deflection down is 19.5°.

Elevator trim is controlled using the elevator/rudder trim hat switch on the control yoke. Position of the trim tab is indicated by a cyan marker in the MFD EIS display.

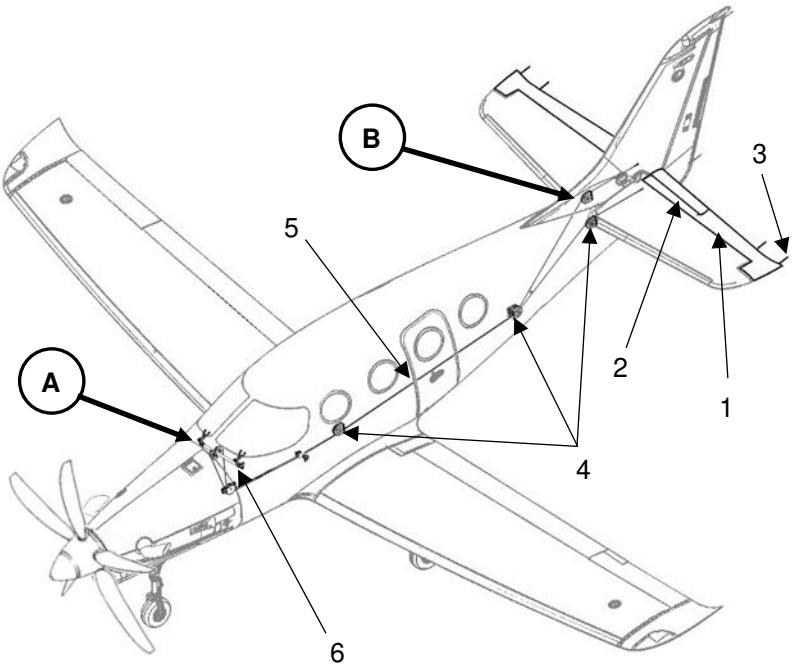

Legend

1. Elevator
2. Trim Tab
3. Static Wick
4. Pulley
5. Cable
6. Torque Tube

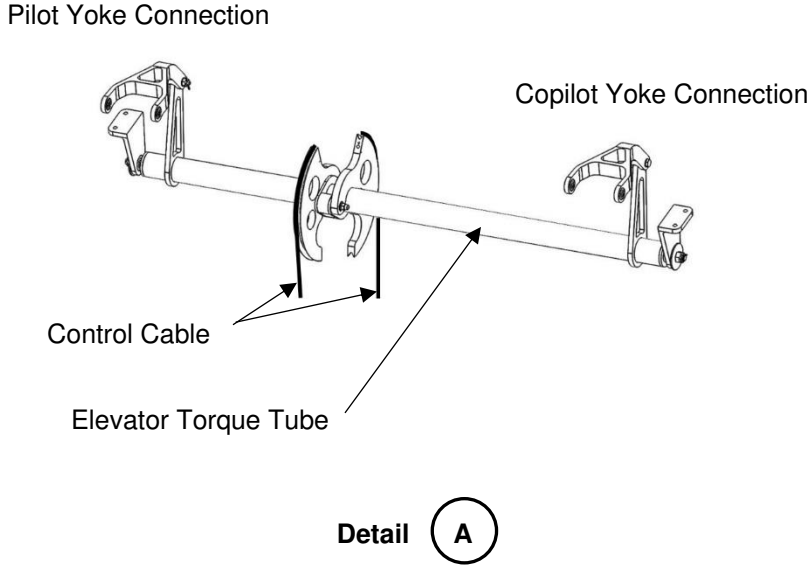

Detail A

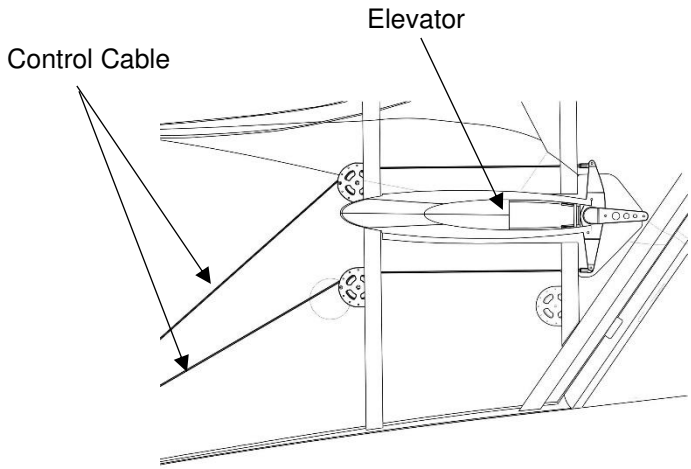

Detail B

7.4.3 RUDDER

The rudder travels 18.75° to the right from neutral and 18.5° to left except when the airplane is airborne and the engine is at 20% torque or greater. Under these conditions the rudder is limited to the left and not additionally limited to the right. Rudder trim tab deflection left is 20°. Rudder trim tab deflection right is 5°.

The rudder limiter is a solenoid powered rod that limits left rudder travel by restricting the travel of the rudder bellcrank. When the airplane is airborne (Weight on Wheels switch closed) and the engine is at 20% power or greater, rudder travel is limited to 6° to the left and unlimited to 18.75° to the right.

Rudder trim is controlled using the elevator/rudder trim hat switch on the control yoke. The position of the trim tab is indicated by a cyan marker in the MFD EIS display.

NOTE

Check full rudder travel only with the nose steering link decoupled.

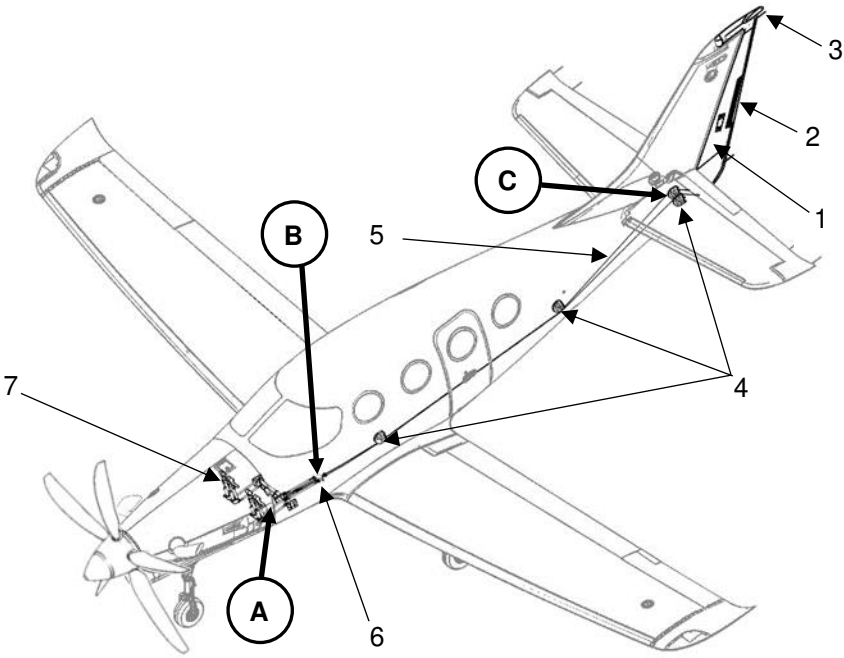

Legend

1. Rudder
2. Trim Tab
3. Static Wick
4. Pulley
5. Cable
6. Bellcrank
7. Rudder Pedals

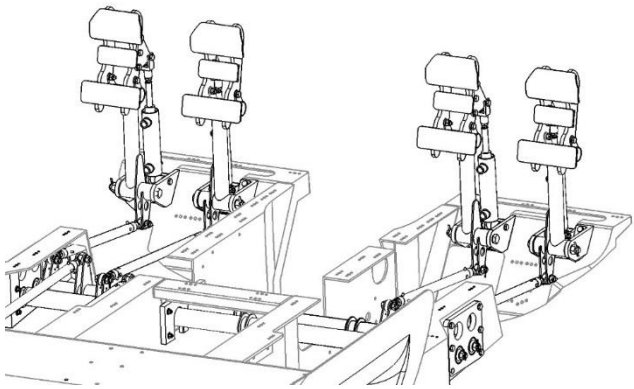

Detail A

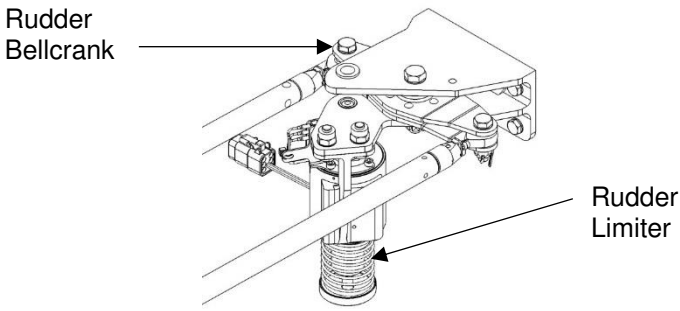

Detail B

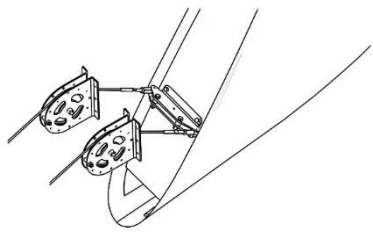

Detail C

7.4.4 TRIM OVERRIDE

In the event of a trim system malfunction, a trim override relay can be activated with the AP/TRIM DISC switch to disable the trim system. Two methods are available: Trim Interrupt or Trim Disconnect.

Trim Interrupt is engaged immediately upon a quick press and release of the AP/TRIM DISC switch. This energizes the trim override relay and in turn interrupts the trim actuator circuit.

Trim Disconnect is engaged by pressing and holding the AP/TRIM DISC switch for more than 1.25 seconds. This activates the Trim Disconnect latch integrated into the G1000 NXi system software. The Trim Disconnect latch keeps the trim override relay energized thereby disconnecting the trim actuator circuit. To re-enable the trim system, press and release the TRIM RESET switch on the pilot control yoke.

7.4.5 FLAPS

The flaps are positioned by a worm gear driven by an electric motor. The worm gear transmits lateral rotation to the flap torque tubes. Control forks on the ends of the torque tube transmit motion to push-pull rods connected to the flaps. The flap motor is activated using the Flap control switch. Three microswitches mounted on the worm gear stop the motor to position the flaps at the desired position for cruise, takeoff, and landing (UP (0°), T/O (12°), and FULL (43.1°)).

The Flap control switch is located in the airplane control panel to the right of the Garmin GCU 477 Flight Management System Controller. The control is a three position (UP, T/O, and FULL) electric selector switch that activates the flap motor to either extend or retract the flaps to the desired position.

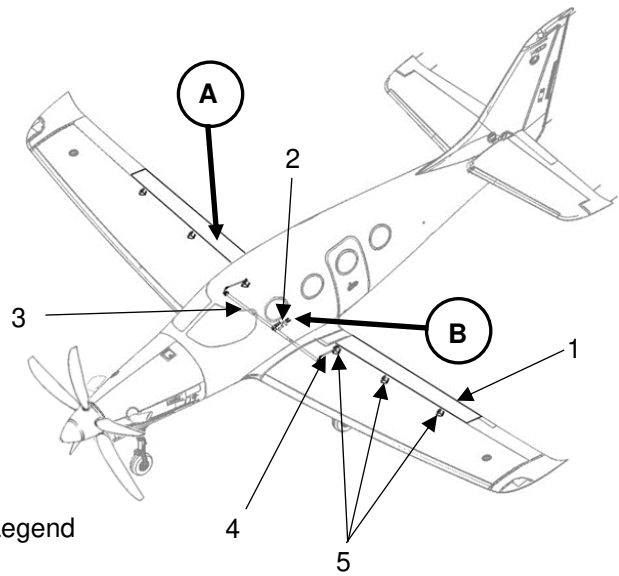

Legend

1. Flap
2. Flaps Motor
3. Torque Tube
4. Rod
5. Hinge

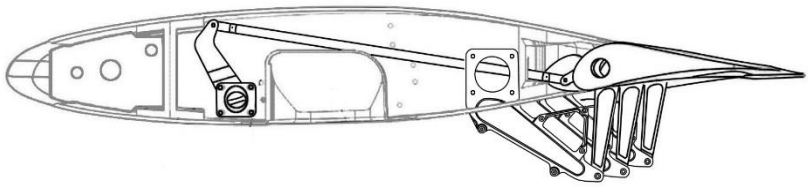

Detail A

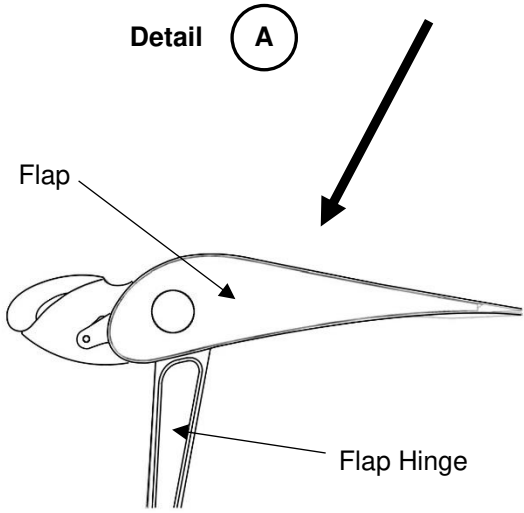

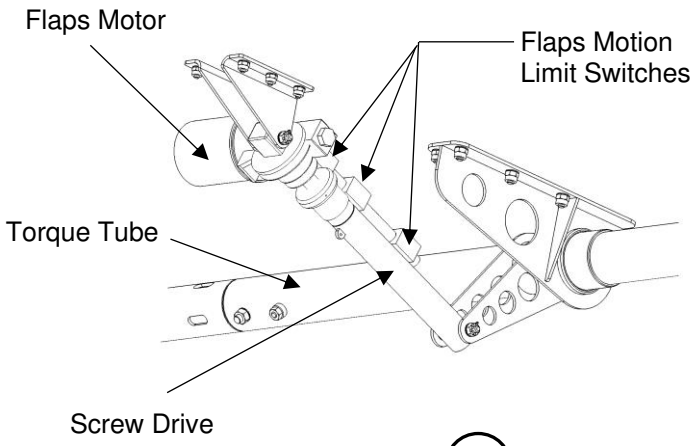

Detail B

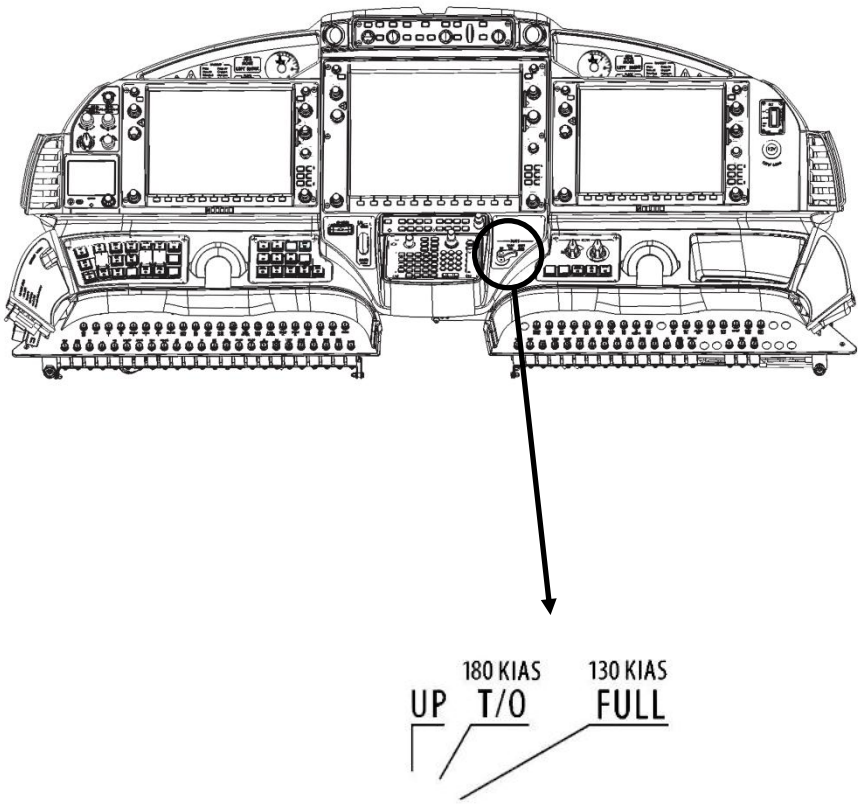

FLAPS

7.4.5.1 FLAP POSITION INDICATION

The primary flap position indication is in the MFD EIS display. Listed within a white outlined box are the words UP, T/O, FULL and TRNS. When the flaps are at any particular position, the indication will display in white with all others being grey. When the flaps position is changed, the TRNS indication will display in yellow until the flaps have moved to the selected position (UP, T/O or FULL) which will change in color from grey to white.

Two white secondary indications (T/O and FULL) illuminate on the Wedge annunciation panels depending on the position of the flaps:

		Indicator	
		T/O	FULL
Flap Position	UP	OFF	OFF
	T/O	ON	OFF
	FULL	OFF	ON
	TRANS	OFF	OFF

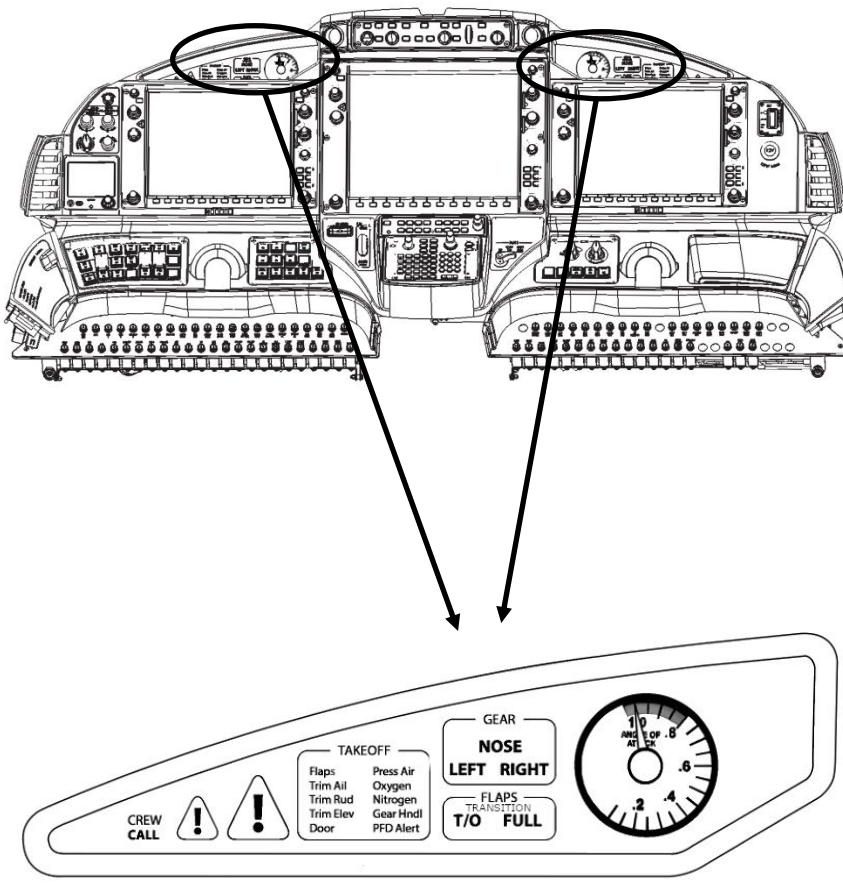

The left wedge is shown, the right wedge is reversed.

7.5 FUEL SYSTEM

The fuel system for the airplane is composed of two wet wing fuel tanks, two electric boost pumps, fuel sumps, a fuel selector and shutoff valve, a fuel filter, hoses, lines, fittings, and (integral to the engine) an oil-to-fuel heat exchanger and engine-driven high-pressure fuel pump.

Refueling is accomplished using over-wing filler caps. Fuel quantity, fuel flow rate, and fuel pressure are shown in the MFD EIS display. Low fuel pressure, low fuel quantity, and fault conditions will be shown as Crew Alerting System (CAS) messages.

7.5.1 FUEL TANKS

Six bays in each wing hold approximately 139 US gallons (526.2 liters) of fuel capacity for a total of 278 US gallons (1052.3 liters). The inboard fuel bay is equipped with flapper valves. An electric boost pump in each wing provides fuel to the fuel selector. Capacitance probes in each wing provide fuel quantity information.

NOTE

Usable fuel amount is 264 US gal (999.3 L).

Unusable fuel amount is 6.7 US gal (25.4 L) per wing for a total of 13.4 US gal (50.8 L).

A fuel venting system at each wing tip protects the wings by ensuring the fuel tanks neither pressurize nor pull a vacuum. The fuel vent system incorporates a NACA vent, flame arrestor, positive and vacuum pressure relief valves, and a float valve.

7.5.1.1 FUEL BOOST PUMPS

The continuous-duty, in-wing submerged fuel boost pumps provide positive fuel pressure from the fuel tanks through the fuel selector and fuel filter to the high-pressure engine-driven fuel pump. They are operated with the L/R FUEL PUMP switches in the PRE-START switch panel.

7.5.1.2 FUEL SAMPLING

There is a fuel sampling valve on the underside of each wing. Fuel drained into a sampling cup at these points will show if water or sediment is present in the fuel. If water or sediment is found in the fuel sample, fuel should continue to be drained until no more water or sediment is evident.

7.5.2 FUEL SELECTOR AND SHUTOFF VALVE

The fuel selector acts to select which tank is providing fuel to the engine, and also acts as a shutoff valve. When the fuel selector control lever is set to the LEFT or RIGHT position, fuel will flow to the fuel filter from the selected tank. In an emergency, fuel flow can be stopped by pushing down on the control lever and turning it, either clockwise or counterclockwise, past the gate until it pops up in the OFF range. Any position in the OFF range will shut off fuel flow. Fuel flow can be restored by pushing down on the fuel selector control lever and turning it to the LEFT or RIGHT position.

WARNING

POSITIONING THE FUEL SELECTOR CONTROL LEVER BETWEEN THE LEFT AND RIGHT POSITIONS MAY CAUSE OVER-PRESSURIZATION OF A FUEL TANK AND SUBSEQUENT DAMAGE TO THE WING.

7.5.2.1 FUEL AUTO-SELECTOR

The fuel selector is equipped with an automatic selection mechanism that switches between the left and right fuel tanks every 2 minutes to balance the flow of fuel from each tank.

The fuel auto-selector is turned on and off with the FUEL AUTO SEL switch on the PRE-TAXI switch panel.

7.5.3 FUEL FILTER

The fuel filter is located between the fuel selector and the engine's oil-to-fuel heat exchanger. It is mounted on the forward side of the firewall at the lower right corner. The fuel filter consists filter disks, drain port, differential pressure indicator, and bypass valve.

If the fuel filter becomes clogged or blocked, the bypass valve opens to allow unfiltered fuel to the engine. This will cause the differential pressure indicator to send a signal to the flight deck that will in turn display the FUEL FILT BLOCK Caution.

7.5.4 ENGINE-START FUEL PURGE SYSTEM

The PT6A-67A engine-driven high-pressure fuel pump is a gear type pump. Any residual air or vapor in the fuel system may prevent the pump from developing the pressure necessary to deliver fuel to the engine. To address this, excess fuel from the pump is vented during start in order to purge the fuel system of any air or vapor that could be trapped in the system.

The starter/generator circuitry controls a normally open solenoid valve to vent excess fuel during the start sequence. The valve remains open when the starter/generator is in start mode and closes when the starter/generator exits start mode. The valve is mounted on the lower engine mount near the fuel filter.

The fuel purge line returns fuel to the left fuel tank.

7.5.5 ENGINE-SHUTDOWN FUEL PURGE SYSTEM

During engine shutdown excess fuel from the fuel nozzle manifold collects in the fuel flow divider. Per U. S. Environmental Protection Agency (EPA) rules, this fuel must be disposed of and may not just be dumped overboard of the airplane. This airplane uses a pressurized bleed air accumulator to dispose of the excess fuel.

The fuel purge system passes P3 bleed air through an air filter and check valve before using it to charge an accumulator. Downstream of the accumulator, another check valve is plumbed enroute to the fuel flow divider on the engine.

During engine shutdown, fuel inlet pressure to the fuel flow divider will drop below the accumulator pressure resulting in the opening of the downstream check valve. This allows the residual fuel in the manifold to be blown into the combustion chamber where it is burned.

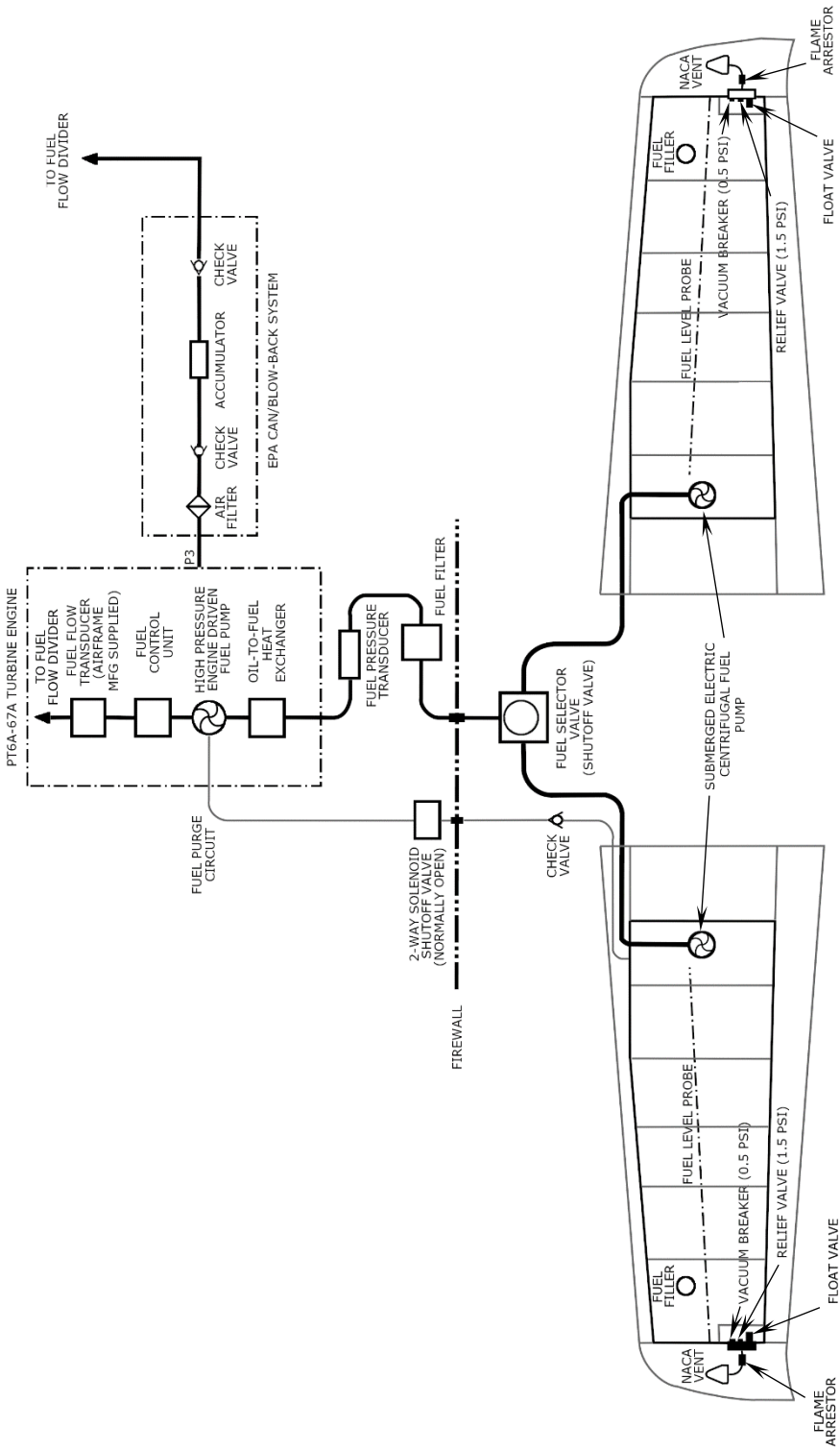
TO FUEL FLOW DIVIDER
CHECK VALVE
ACCUMULATOR
CHECK VALVE
AIR FILTER
EPA CAN/BLOW-BACK SYSTEM
P3
PT6A-67A TURBINE ENGINE
TO FUEL FLOW DIVIDER
FUEL FLOW TRANSDUCER (AIRFRAME MFG SUPPLIED)
FUEL CONTROL UNIT
HIGH PRESSURE ENGINE DRIVEN FUEL PUMP
OIL-TO-FUEL HEAT EXCHANGER
FUEL PRESSURE TRANSDUCER
FUEL FILTER
FUEL PURGE CIRCUIT
2-WAY SOLENOID SHUTOFF VALVE (NORMALLY OPEN)
FIREWALL
CHECK VALVE
FUEL SELECTOR VALVE (SHUTOFF VALVE)
SUBMERGED ELECTRIC CENTRIFUGAL FUEL PUMP
NACA VENT
FLAME ARRESTOR
FUEL FILLER
FUEL LEVEL PROBE
VACUUM BREAKER (0.5 PSI)
RELIEF VALVE (1.5 PSI)
FLOAT VALVE

7.6 LANDING GEAR

This airplane has hydraulically actuated retractable main and nose gear in a tricycle configuration. Taxiing, takeoff, and landing forces are absorbed using hydro-pneumatic dampers on each trailing link main gear and a hydro-pneumatic strut on the nose gear.

The nose gear is coupled to the rudder pedals for steering of up to 15 degrees to each side of the centerline of the airplane. Beyond 15 degrees the steering mechanism decouples and the airplane can be steered up to 60 degrees to each side of the centerline of the airplane using the application of differential braking to the main gear wheels. The disc brakes on the main wheels are activated by individual master cylinders mounted to the left and right rudder pedals of both the pilot and copilot.

NOTE
The landing gear may not fully retract into the uplocks with a load factor in excess of 1.4.

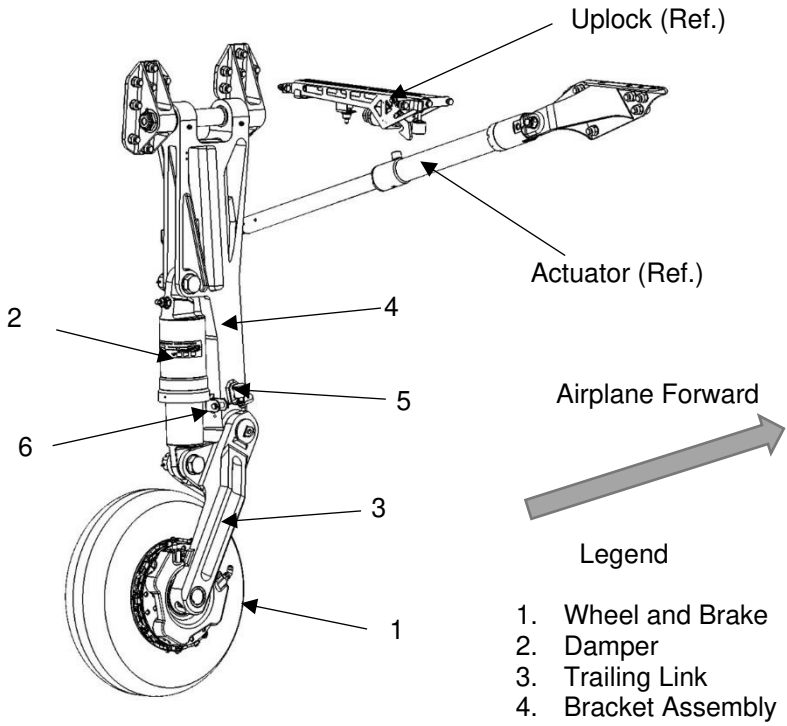

Main Landing Gear
Left gear shown. Right gear similar.

Legend

1. Wheel and Brake
2. Damper
3. Trailing Link
4. Bracket Assembly
5. Weight on Wheels Switch
6. Uplock Bracket

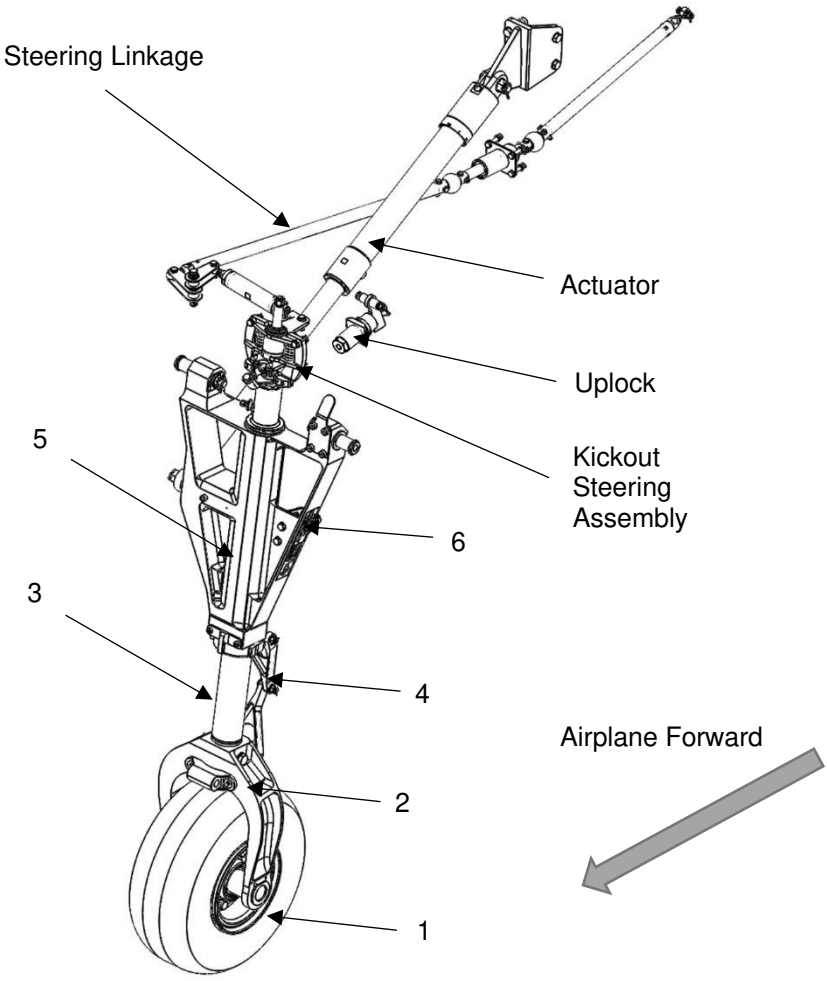

Nose Landing Gear

Legend

1. Wheel
2. Fork
3. Strut Piston
4. Scissor Link
5. Bracket Assembly
6. Uplock Bracket

7.6.1 WHEELS

This airplane is equipped with a 6.00 x 6 nose wheel and two 18 x 5.5 main wheels. Both types of wheels are made of forged aluminum alloy and use 10-ply tubeless tires. Each wheel has two rim halves, two bearing cups, two bearing cones, two snap rings, and grease seals. The wheel halves are mated using bolts, washers, and nuts.

Inflation and servicing of the tires to the following pressures using nitrogen is recommended.

Nose Wheel Tire: 65 to 70 psi (448.2 to 482.63 kPa)
Main Gear Tire: 103 to 108 psi (710.16 to 744.6 kPa)

NOTE

Consider load factor and ambient temperature when checking tire pressure. Air pressure in the tire will increase when the tire is subjected to loads and when temperature increases.

7.6.2 BRAKES

The brake system consists of a brake fluid reservoir, four brake master cylinders, and two 8” six-cylinder metallic-lining brake assemblies. The brake system is used to stop the airplane and provide steering by differential braking. If the pilot and copilot simultaneously apply pressure to the same side brake pedal, the one applying the greatest pressure will control the braking.

The brake system is separate and independent from the airplane hydraulic system. The brake fluid reservoir is mounted on the upper left of the firewall.

Brake fluid flows from the brake fluid reservoir to the left and right pilot-side master cylinders mounted on toe-pedals attached to the pilot rudder pedal assemblies. The fluid then flows from the left and right pilot-side master cylinders to the respective copilot-side master cylinders. From there, brake fluid flows to the respective brake assemblies mounted on the main landing gear. There is no brake anti-lock system.

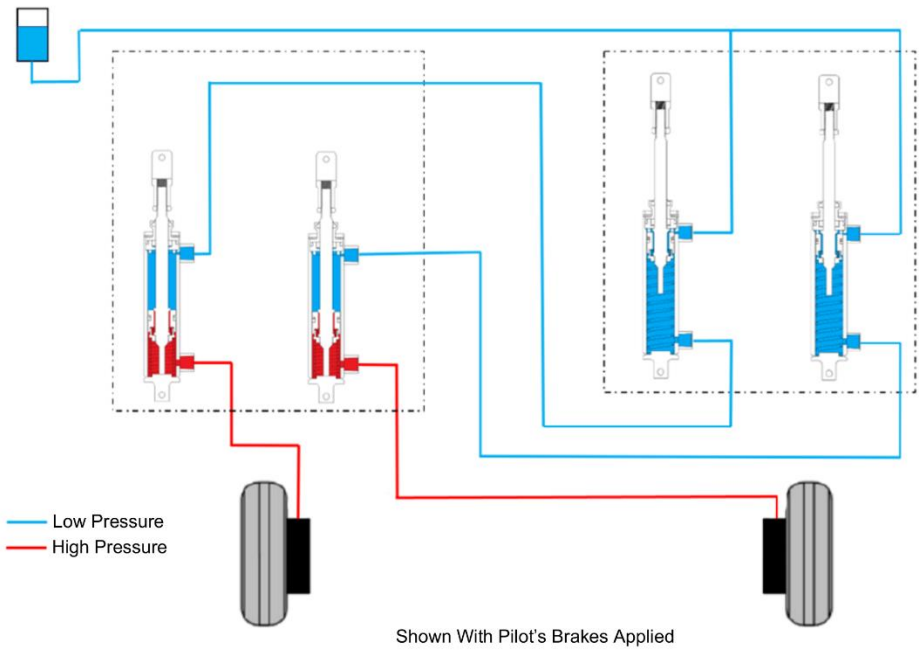

Shown With Pilot’s Brakes Applied

7.6.3 WEIGHT ON WHEELS SWITCH

There is a Weight On Wheels (WOW) switch on each of the main landing gear which signals to various systems whether the plane is on the ground (weight on wheels) or airborne (weight off wheels).

The WOW switches interact with various systems on the airplane as follows:

Left WOW Switch

Cabin Pressurization Controller	No pressurization schedule on the ground, i.e. cabin will not pressurize.
Left Lift Computer	The Pilot Actuated Test (PAT) works only when the airplane is on the ground.
Pitot/Stall Heat	Heater elements in the pitot tubes and stall vanes operate at half the in-flight power output when the airplane is on the ground.
Rudder Limiter	Rudder travel is limited when the airplane is airborne and the engine is at 20% torque or more.

Right WOW Switch

Automatic Engine Igniters	The igniters are automatically turned on when the airplane is airborne and the engine is at 20% torque or less.
Garmin Systems	Signal sent to Garmin systems to distinguish between ground vs. airborne operations.
Landing Gear	The landing gear will not retract when the airplane is on the ground.
Mass Flow Controller	Pressurization air flow is 1.5 pounds per minute on the ground, 5 pounds per minute airborne.
Right Lift Computer	The Pilot Actuated Test (PAT) works only when the airplane is on the ground.

7.6.4 HYDRAULIC SYSTEM

The hydraulic system powers the landing gear and up-lock actuators to extend and retract the landing gear. The hydraulic system consists of an engine-driven pump, accumulator, shock suppressor, high-pressure hydraulic valve assembly, reservoir, pressure switch, bypass solenoid, secondary bypass valve, landing gear actuators, and up-locks. Down-locks are integral to the landing gear actuators.

The engine-driven pump feeds hydraulic fluid through a suppressor (to reduce noise and vibration) to charge the accumulator. Pressurized fluid is then routed from the accumulator into the high-pressure hydraulic valve assembly. Engine bleed air is used to create positive pressure in the reservoir, ensuring adequate fluid flow to the hydraulic pump.

The hydraulic system operates in one of two modes: pressurizing or recirculation. In pressurizing mode, pump output pressures the system until a pressure switch opens a bypass solenoid, switching the system to recirculation mode. In recirculation mode, pump output recirculates through the bypass solenoid directly back to the reservoir. The bypass solenoid also opens during engine start to reduce drag on the starter. In the event of a bypass solenoid failure, the primary relief valve prevents over-pressurization.

When the landing gear switch is engaged, fluid is released to the landing gear actuators through a solenoid valve. This causes a decrease in hydraulic pressure, which switches the hydraulic pump from recirculation to pressurizing mode, providing power to the actuators. The pump switches back to recirculation mode after the landing gear has locked in place (either up or down), and the system has again reached full pressurization.

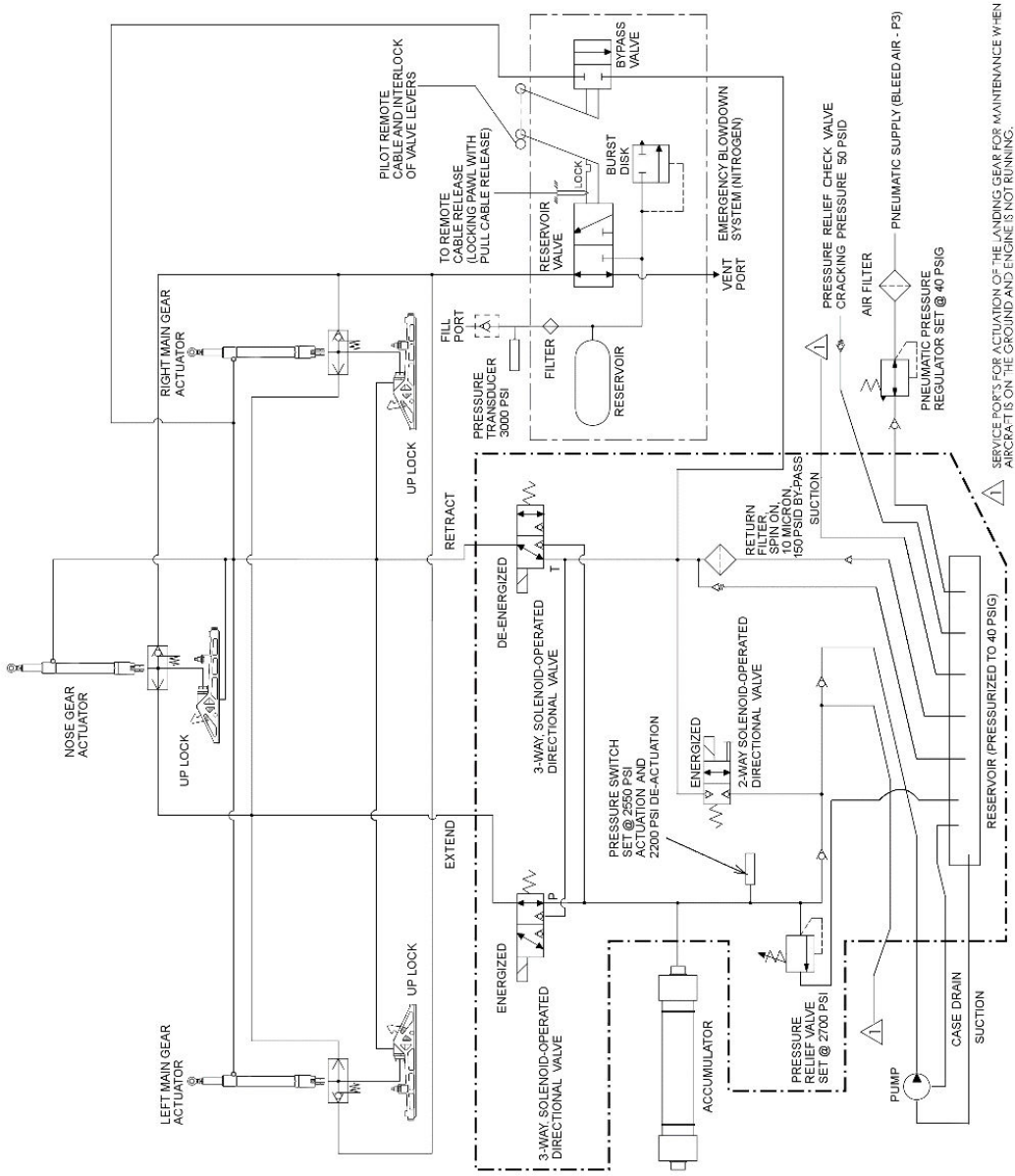
PILOT REMOTE CABLE AND INTERLOCK OF VALVE LEVERS
TO REMOTE CABLE RELEASE (LOCKING PAWL WITH PULL CABLE RELEASE)
BYPASS VALVE
BURST DISK
LOCK
RESERVOIR VALVE
EMERGENCY BLOWDOWN SYSTEM (NITROGEN)
VENT PORT
FILL PORT
PRESSURE TRANSDUCER 3000 PSI
FILTER
RESERVOIR
PRESSURE RELIEF CHECK VALVE CRACKING PRESSURE 50 PSID
AIR FILTER
PNEUMATIC SUPPLY (BLEED AIR - P3)
PNEUMATIC PRESSURE REGULATOR SET @ 40 PSIG
SERVICE PORTS FOR ACTUATION OF THE LANDING GEAR FOR MAINTENANCE WHEN AIRCRAFT IS ON THE GROUND AND ENGINE IS NOT RUNNING.
RIGHT MAIN GEAR ACTUATOR
UP LOCK
RETRACT
EXTEND
DE-ENERGIZED
3-WAY, SOLENOID-OPERATED DIRECTIONAL VALVE
RETURN FILTER, SPIN ON, 10 MICRON, 150 PSID BY-PASS
SUCTION
NOSE GEAR ACTUATOR
UP LOCK
ENERGIZED
2-WAY SOLENOID-OPERATED DIRECTIONAL VALVE
PRESSURE SWITCH SET @ 2550 PSI ACTUATION AND 2200 PSI DE-ACTUATION
RESERVOIR (PRESSURIZED TO 40 PSIG)
LEFT MAIN GEAR ACTUATOR
UP LOCK
ENERGIZED
3-WAY, SOLENOID-OPERATED DIRECTIONAL VALVE
ACCUMULATOR
PRESSURE RELIEF VALVE SET @ 2700 PSI
PUMP
CASE DRAIN
SUCTION

7.6.5 EMERGENCY EXTENSION SYSTEM

If the hydraulic system malfunctions, an emergency extension system is used to extend the landing gear. Pulling up on the lever first opens a valve to relieve pressure in the hydraulic system, preventing hydraulic lock. Then the lever opens the nitrogen discharge valve to pressurize the actuators.

The emergency extension system is actuated with the Emergency Gear Extension lever located within the underfloor compartment between the pilot and copilot seats.

Once pulled up fully, the lever locks into place until it is reset by maintenance personnel.

7.6.6 LANDING GEAR CONTROL

The Landing Gear Control is located in the airplane control panel to the left of the Garmin GCU 477 Flight Management System Controller. The control is an electric selector switch that activates the hydraulic system to either extend or retract the landing gear. Operation of the landing gear is performed by pulling out on the control lever then putting it in the desired “UP” or “DOWN” position.

NOTE

A weight on wheels switch on the right main landing gear prevents the gear from being retracted when the airplane is on the ground.

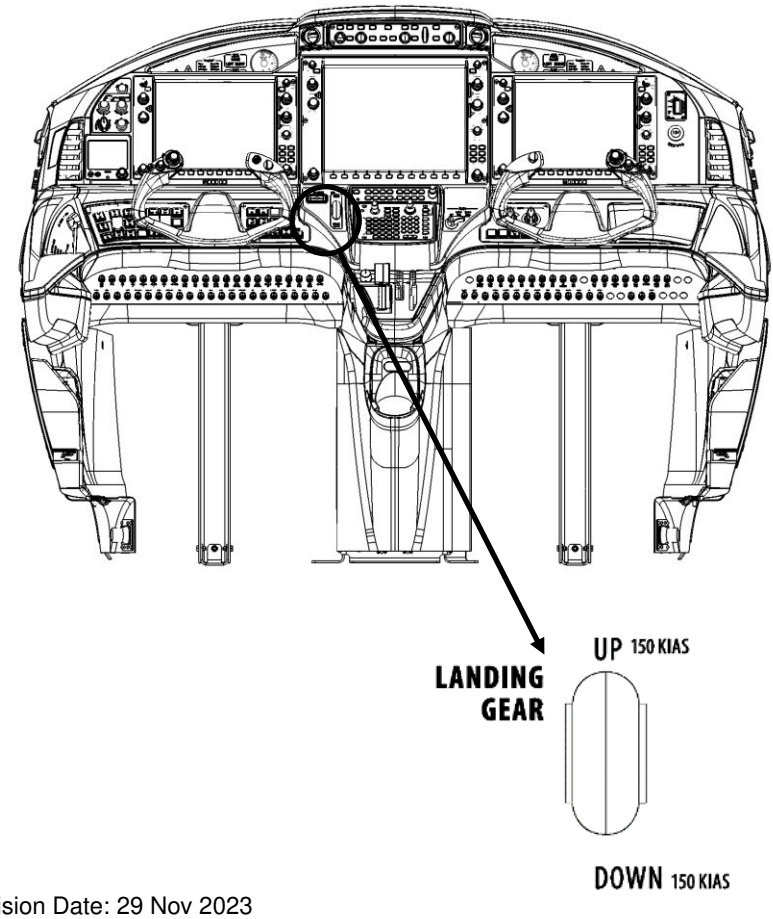

7.6.7 LANDING GEAR POSITION INDICATION

The primary landing gear position indication is in the MFD EIS display to the right of the “LG” label. When the gear is down and locked, three green circles surrounding the letters “DN” are displayed (one each for the left, right and nose gear). When the landing gear position is in transition the circles are gray. When the landing gear is up and locked three white circles surrounding the letters “UP” are displayed.



Secondary indication is shown on the Wedge annunciator panels. Three words (NOSE, LEFT, and RIGHT) illuminate depending on the condition of the landing gear:

Landing Gear Position Indicator

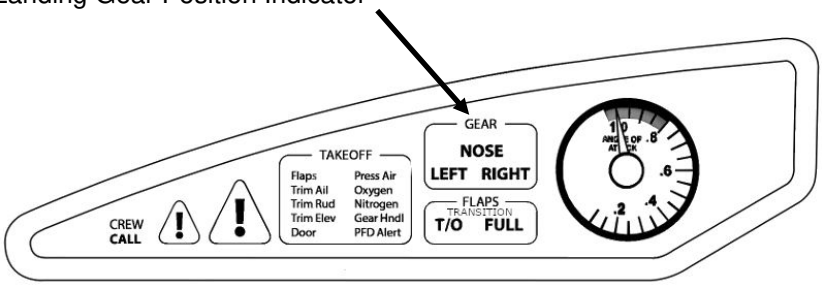

The left wedge is shown, the right wedge is reversed.

	Annunciation Color	
Gear Position	**Primary (MFD)**	**Secondary (Wedge)**
Up and Locked	White	Off
Transition	Grey	Red
Down and Locked	Green	Green

7.7 POWERPLANT

Propulsion and power for this airplane is provided by a Pratt & Whitney PT6A-67A turboprop engine, which has twin shafts with four axial and one centrifugal compressor stages, an annular combustion chamber, and a three stage turbine where one stage drives the compressor and two stages power the propeller.

This engine is rated to 1200 SHP (Shaft Horsepower) at takeoff power, developing a total power output of 1272 ESHP (Equivalent Shaft Horsepower).

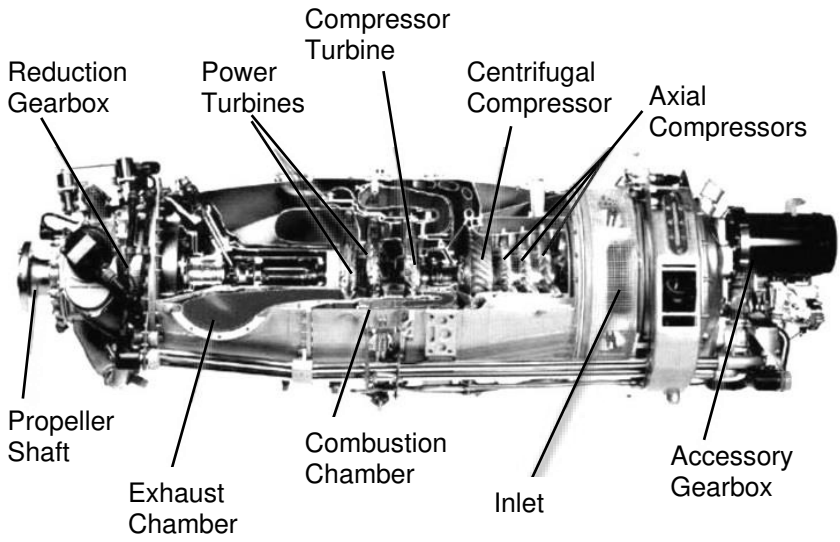

7.7.1 ENGINE CONTROLS

The engine and the propeller are controlled using four levers located below and aft of the instrument panel centered between the pilot and copilot.

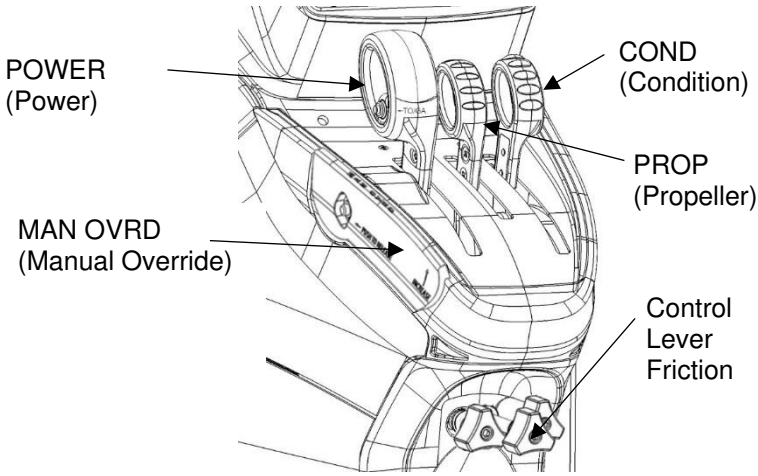

7.7.1.1 POWER LEVER

The Power (POWER) lever selects the required engine power (N_G) through a range from idle to maximum. In certain conditions it directly controls the propeller pitch.

The POWER lever has a flight and a ground operating range separated by a lift gate immediately aft of the IDLE position. The flight operating range is forward of the gate. When the POWER lever is at the idle gate, the gas generator is at the idle speed selected on the COND lever, and the propeller is either feathered or at the primary blade angle, depending on the position of the PROP lever.

As the POWER lever is moved forward of the idle gate, engine power and propeller RPM speed increase until each are high enough for the propeller to operate in a constant speed mode. In this mode, the propeller governor selects the propeller pitch to maintain the propeller speed selected on the PROP lever.

A lifting action to raise the POWER lever over the flight idle gate is required to move it into the ground fine and reverse thrust operating range.

CAUTION

TO PREVENT DAMAGE TO ENGINE CONTROLS, DO NOT MOVE THE POWER LEVER AFT OF THE IDLE GATE WITH THE ENGINE NOT RUNNING.

Aft of the idle gate is the BETA range for ground fine and reverse thrust operations. The POWER lever must be lifted over the idle gate to move it into the BETA range. In this mode, the beta valve controls the propeller pitch, allowing both engine power and propeller pitch to be controlled together with the POWER lever.

Initial POWER lever movement aft of the idle gate adjusts the propeller pitch while the gas generator remains at idle (ground fine) and can be used to control taxi speed. Further aft movement causes the propeller to move into the reverse range followed by an increase in engine power.

7.7.1.2 CONDITION

The Condition (COND) Lever has three positions and is used to select the gas generator idle speed and shut down the engine. The LOW position (approximately 52% N_G) is for engine start and shutdown, or periods of long idling. To ensure the propeller speed remains outside the prohibited range (400 to 900 rpm), use the LOW setting only when the propeller is feathered.

The HIGH position (approximately 71% N_G) is selected for ground and flight operation. HIGH idle keeps the propeller speed out of the prohibited range and provides sufficient bleed air flow to maintain cabin pressurization at minimum N_G and to give smooth engine response to POWER lever movement during approach and landing.

The FUEL CUT-OFF position mechanically stops the fuel flow to shut down the engine. To move the COND lever from the FUEL CUT-OFF to LOW position it must be lifted over a gate. The lever can then be moved from LOW to HIGH and back according to the setting of the lever friction knob. To move the lever from LOW to FUEL CUT-OFF it has to be lifted over the gate again.

7.7.1.3 PROPELLER

The Propeller (PROP) Lever selects the propeller speed during constant-speed mode through a range from a minimum of 900 to a max of 1700 rpm. In addition, the propeller can be feathered by pulling the PROP lever fully aft to the FEATHER position. The propeller is normally feathered prior to engine shutdown and remains feathered for the subsequent engine start.

7.7.1.4 MANUAL OVERRIDE

The red fuel control unit (FCU) Manual Override (MOR) Lever, located on the left side of the power quadrant and placarded MAN OVRD, controls the engine power in case of a pneumatic failure of the engine fuel control or in case of a POWER lever system failure. The MOR lever is an emergency device and it is possible to exceed engine limits if the MOR lever is operated too quickly. The MOR lever should allow the crew to continue safe flight and landing. Refer to Section 3.4.4 PARTIAL OR ERRATIC POWER LOSS.

The MOR lever is operated by pushing the button on the side to unlock it then rotating as required. There is a gap between the MOR mechanism and the pneumatic bellows in the FCU. This gap must first be taken up before the MOR lever takes effect, which results in a dead band when starting to operate the MOR lever.

At high altitudes it is possible to achieve full engine power when operating the MOR system. At low altitudes with the MOR lever fully forward the MOR system may not give full engine power.

7.7.2 ENGINE INDICATING

The normal engine indicators are shown on the Engine Indicating System (EIS) on the left side of the MFD. When the Garmin G1000 NXi is in reversionary mode, the engine indicators are displayed on all the GDUs.

- TRQ – Engine Torque (%),
- NP – Propeller Speed (RPM),
- NG – Gas Generator Rotation Speed (%),
- ITT – Interstage Turbine Temperature (°C),
- OIL PSI – Oil Pressure (PSI),
- OIL TEMP – Oil Temperature (°C).

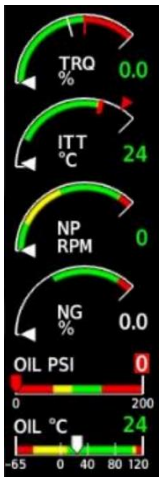

NORMAL
EIS



REVERSIONARY
EIS

7.7.3 ENGINE FUEL

The engine fuel system consists of an oil to fuel heat exchanger, a high-pressure engine driven fuel pump, a fuel control unit, a fuel flow transducer, a fuel flow divider and dump valve, and the fuel nozzles.

Fuel is delivered to the oil-to-fuel heat exchanger from the fuel filter. The oil-to-fuel heat exchanger pre-heats the fuel, to eliminate the chance of ice formation in the fuel, and reduces the oil temperature. The high-pressure engine-driven fuel pump delivers fuel to the fuel control unit after it passes through the oil-to-fuel heat exchanger. Refer to Section 7.5 FUEL SYSTEM for more information.

The fuel control unit is controlled by the POWER and COND levers during normal operations, and the MANUAL OVERRIDE lever during emergency operation. The fuel control unit is also controlled by the propeller governor and torque limiter at the front of the engine via the pneumatic P_Y control line. Either system can cause the FCU to reduce fuel flow by venting air pressure from the P_Y control line. Fuel flows through the fuel flow transducer on its way to the fuel flow divider and dump valve. The fuel flow transducer converts fuel flow rate into an electrical signal which is then displayed in the MFD EIS display.

The fuel flow divider and dump valve serves two functions. First, it divides the fuel between the primary and secondary manifolds. Second, it directs air from the fuel purge accumulator into the fuel manifolds in order to purge them of unused fuel at engine shutdown. The fuel manifolds deliver fuel to 14 duplex fuel nozzles with primary and secondary spray patterns.

7.7.4 ENGINE OIL

The engine oil system consists of pressure, scavenge, and breather systems with the oil tank being an integral part of the engine compressor inlet case. Oil is supplied to the engine bearings, bushings, reduction gears, accessory drives, torquemeter pressure transmitter, and propeller governor. Oil is also used to cool the bearings.

A filler neck with quantity dipstick and cap are located on top of the accessory gearbox. The quantity dipstick is marked in one US quart increments. It is not recommended to start a flight without any oil showing on the dipstick. Total oil capacity is 3.6 US gal (13.6 L) while usable oil quantity is 1.5 US gal (5.7 L). The oil tank incorporates a drain plug.

An engine driven gear type pressure pump provides oil to the engine bearings, torquemeter pressure transmitter, propeller bearings, reduction gears, and propeller governor. Oil flows from the integral oil tank, through the pick-up screen, to the oil pump. Oil then goes through a pressure regulating valve which regulates oil pressure to between 90 and 135 psi. A pressure relief valve opens when pressure exceeds 160 psi, possibly during cold weather operations. Oil then goes through a cartridge type oil filter assembly, which incorporates a bypass valve and a spring-loaded check valve. The bypass valve allows oil to bypass the filter in case the filter becomes clogged, however oil pressure drops to below 90 psi when the filter by-pass valve is open. The check valve prevents gravity oil flow into the engine after shutdown and permits the oil filter to be changed without draining the oil tank. Oil is then directed throughout the engine and applicable accessories.

The oil scavenge system incorporates two double element pumps. The oil from the reduction gearbox (RGB), which takes output power from the engine to turn the propeller, is pumped directly through the airframe mounted oil cooler. All remaining oil passes through the oil to fuel heat exchanger and, depending on oil temperature, is directed back to the oil tank or through the oil cooler.

When the fuel temperature is low, warm oil flows through the oil to fuel heater. At fuel temperatures above 21°C (70°F) the bypass valve begins to open and at 37°C (98°F) the bypass valve is fully open and the oil bypasses the oil to fuel heater.

The scavenge system in the propeller reduction gearbox incorporates a magnetic chip detector that detects foreign matter in the system and causes the ENGINE CHIP Warning to be displayed. The chip detector also acts as the propeller reduction gearbox oil drain.

The breather system allows air from the engine bearing compartments and the propeller reduction and accessory gearboxes to be vented overboard through the centrifugal breather in the accessory gearbox.

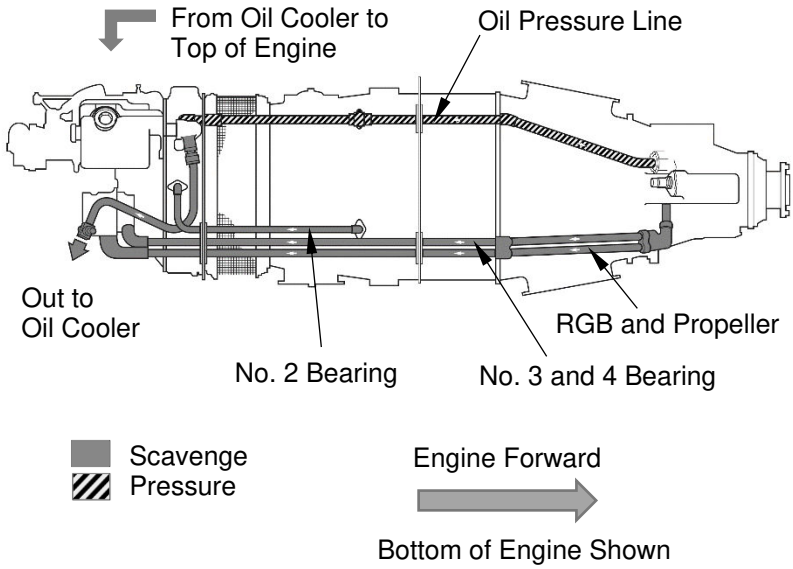

7.7.5 TORQUE LIMITER

A torque limiter is installed at the torque transmitter boss on the forward engine case. Within the unit is a sealed bellows connected directly to the torque meter oil pressure outlet, a flapper valve, a P_Y air bleed orifice and a torque-limit adjusting spring. Oil pressure proportional to engine torque is applied through cored passages in the reduction gearbox to the sealed bellows in the limiter body. The bellows is mechanically connected to the flapper valve and to the controlling spring.

With an increase in torque pressure, above the control spring setting, the flapper valve adjusts to compensate for this increase and causes the pneumatic pressure orifice to open and bleed off P_Y air. As P_Y air pressure is bled off, the fuel flow from the FCU is reduced by closing the metering valve, causing gas generator speed and engine torque to decrease until the engine torque meter pressure is balanced by the torque control spring pressure; at this time the P_Y pressure orifice closes.

The torque limiter limits the engine torque to slightly below 100% at sea level condition. At higher altitudes, due to ambient pressure and interference with the FCU maximum governing speed, it is possible for maximum torque not to be obtained.

7.7.6 ENGINE START

Starting is provided by the combination starter/generator unit. Power to the starter/generator is supplied from the Primary Bus.

Starter function is controlled by the Generator Control Unit (GCU) using the STARTER GEN and START switches in the PRE-START switch panel. The STARTER GEN is switched to the ON position to provide power to the GCU. After the START switch is pressed momentarily, the GCU energizes the starter relay in the Master Control Unit (MCU), which in turn energizes the starter. The starter will automatically disengage when the engine reaches 50% N_G.

The FUEL PURGE ON Caution will be displayed if the fuel purge circuit has been open for more than 60 seconds.

The start sequence can be interrupted at any time by switching STARTER GEN to OFF.

For information on the generator function, refer to Section 7.9 ELECTRICAL SYSTEM.

7.7.7 IGNITION

The ignition system provides the electrical spark required to initiate the combustion process during engine start. The system consists of an ignition exciter, two high-voltage cables, and two spark igniters.

Engine ignition is controlled by the IGNITER switch in the PRE-START switch panel. The IGNITER switch has two positions: AUTO and ON. In the AUTO position, the igniters will automatically turn on whenever torque drops below 20% while in flight (weight off wheels). The igniters can be turned on manually by switching IGNITER to the ON position.

The IGNITER switch should be in the ON position when operating the airplane in conditions of heavy precipitation, turbulence, severe icing, or wind shear which will help minimize the potential for a flame-out due to an interruption in total airflow. Refer to Section 4 NORMAL PROCEDURES.

7.7.8 ENGINE AIRFLOW AND COMBUSTION

Intake air for the engine is drawn aft through an intake located in the bottom engine cowling. The compressor assembly draws intake air through the air induction system (7.7.9) and into the engine through an annular plenum installed around the compressor inlet case. Protection against foreign object damage and icing is provided by the air inlet screen and an inertial separator system.

The pressure of the inlet air is increased as it is drawn forward through each stage of the compressor assembly. From the centrifugal impeller, compressed air is directed radially to an array of diffuser pipes and straightening vanes then directed forward through to the combustion chamber. A compressor bleed valve regulates pressure within the compressor assembly.

Compressor discharge air, known as P3 air, is admitted to the interior of the combustion chamber through a series of perforations in the combustion chamber liners. Metered fuel from the fuel control unit is introduced to the interior of the combustion chamber through fourteen duplex nozzles.

The air/fuel mixture is ignited by a pair of spark igniters during engine start after which combustion is self-sustaining under normal engine operating conditions. Once ignited, the expanding combustion gasses are directed aft, then forward 180 degrees through the combustion chamber to the compressor turbine inlet. This expansion forces the gasses forward through the compressor turbine, the first stage power turbine, the second stage power turbine, and out the exhaust stacks.

Air not used in combustion, referred to as secondary air, is used by the engine for hot section cooling, bearing compartment sealing, and fuel control.

7.7.9 AIR INDUCTION

The air induction system is a pitot-style intake which directs and meters airflow into the engine. It consists of an inlet, diffuser-style ducts, inertial separators, and a plenum. Inlet air is directed equally into two ducts routed to the left and right sides of the engine then into an annular plenum surrounding the engine intake. Each duct is equipped with an inertial separator to protect the engine from ingesting harmful particulate matter.

Each inertial separator is equipped with a vane controlled by an electric actuator via the INERT SEP switch in the ICE switch panel. When INERT SEP is switched OFF, the vanes are in the fully open position and inlet air flows unimpeded into the engine air inlet. When INERT SEP is switched ON, the vanes partially close the ducts. This forces the inlet air to move through a sharp turn causing the particles to drop out of the air flow and discharge through a bypass duct in the sides of the cowling.

If the INERT SEP OPEN Advisory displays, the inertial separator vanes are open.

If the INERT SEP FAIL Caution displays, the inertial separator is not in the commanded position within 30 seconds of the INERT SEP switch being selected ON or OFF.

Turning the inertial separators ON will have an impact on engine performance, and the pilot should reference the appropriate performance tables for their use. Refer to Section 4 NORMAL PROCEDURES and Section 5 PERFORMANCE.

7.7.10 ENGINE ACCESSORIES

The following engine accessories are mounted on the front of the engine:

- Propeller
- Propeller governor
- Propeller overspeed governor
- Torque limiter
- Torque pressure transducer
- N_P Tachometer Generator

The following accessories are mounted on the accessory gearbox on the rear of the engine:

- Starter/Generator
- Standby Alternator
- Fuel Control Unit
- High-Pressure Fuel Pump
- Oil-to-Fuel Heat Exchanger
- N_G Tachometer Generator
- Hydraulic Pump

7.8 PROPELLER

This airplane is equipped with a full-feathering, full-reversing, counterweighted, variable-speed Hartzell 5-blade propeller. Integrated into each blade is an electro-thermal de-ice boot.

The full-feathering propeller hub uses oil pressure to bring the propeller out of feather. If there is a power failure and subsequent oil pressure loss, the propeller will feather, enhancing the glide range of the airplane.

The pilot has control over the propeller through the POWER and PROP levers. During flight, the propeller is governed to maintain a maximum of 1700 RPM and a minimum of 900 RPM. On the ground, the propeller can be moved into ground fine and reverse pitch through the POWER lever. Refer to Section 7.7.1 ENGINE CONTROLS.

7.9 ELECTRICAL SYSTEM

The electrical system on the airplane is a 28 VDC system with a split-bus architecture providing independent sources of power to independent avionics display systems.

The electrical system consists of:

- One primary and five secondary buses controlled by a Master Control Unit (MCU)
- A diode-isolated essential bus
- A hot bus
- Two independent, sealed, lead-acid, 25 ampere-hour batteries
- An automatic battery cross-tie
- Primary electrical generation from an engine driven 300 ampere 28 VDC starter/generator (limited to 200 amps on the ground)
- Secondary electrical generation from an engine driven 41 ampere 27.5 VDC standby alternator
- An external ground receptacle to connect to a ground power unit (GPU)

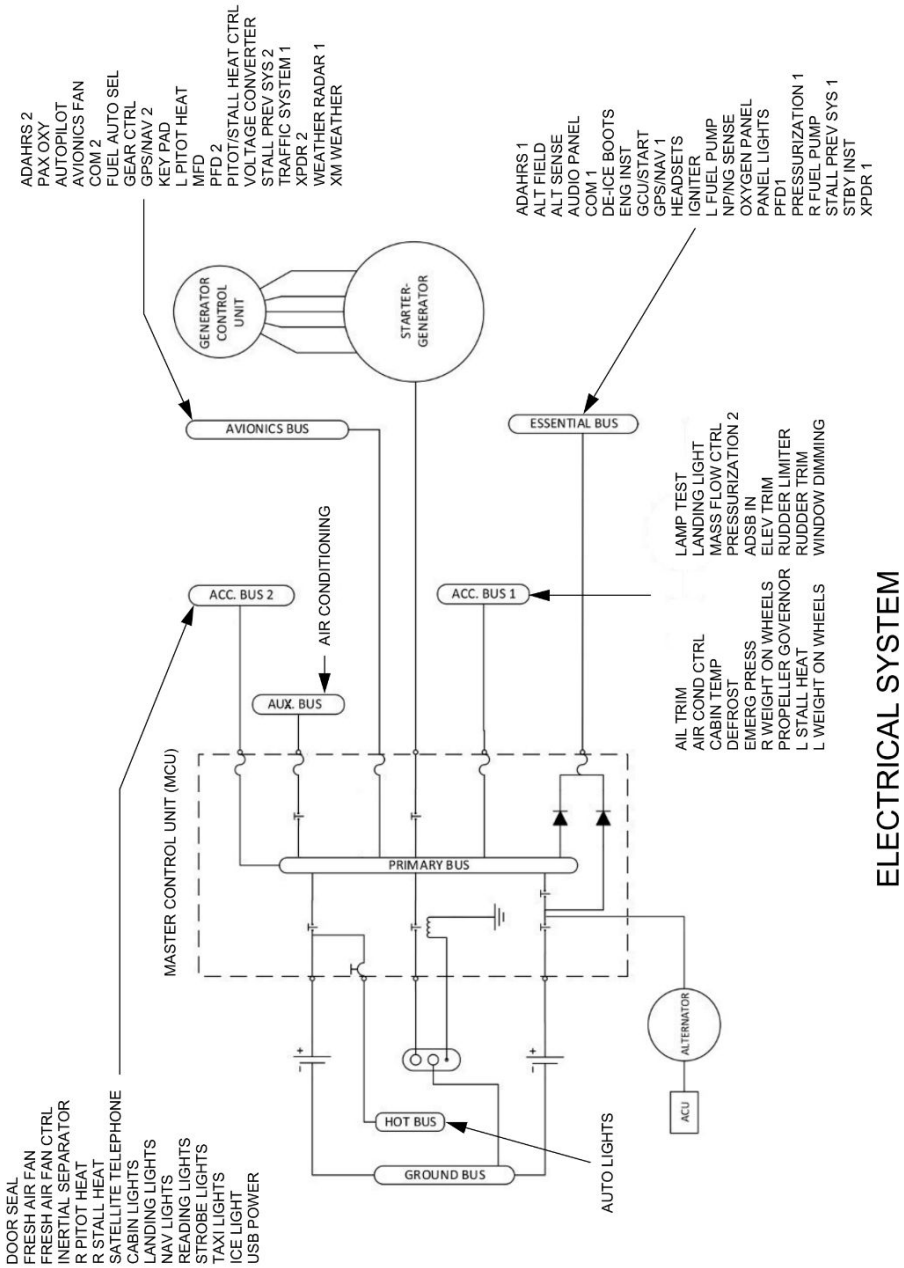

ELECTRICAL SYSTEM

7.9.1 POWER SOURCES

Power is supplied to the airplane from the batteries, starter/generator, standby alternator, and ground power receptacle.

7.9.1.1 BATTERIES

Two Concorde RG-325 batteries rated at 25 ampere-hours each are installed in parallel for engine starting and emergency power storage. These batteries are recombinant gas (RG) valve regulated lead acid (VRLA) batteries using absorbed glass mat (AGM) technology. They have non removable vent valves, are maintenance free, and the addition of electrolyte or water is not required.

Battery 1 is controlled by the BATT 1 switch in the PRE-START switch panel. When BATT 1 is switched ON, the Battery 1 relay closes, providing power to the Essential bus via an isolating diode and the Primary bus via the automatic cross-tie relay.

Battery 2 is controlled by the BATT 2 switch in the PRE-START switch panel. When BATT 2 is switched ON, the Battery 2 relay closes, providing power to the Primary Bus.

The voltage of the batteries (BATT 1 and BATT 2) are displayed in the lower left corner of the MFD EIS.

If the BATT 1 VOLTS LO or BATT 2 VOLTS LO Warning displays, battery voltage is below 25.0 V with engine running, or Battery voltage is below 24.2 V with engine not running.

7.9.1.2 STARTER/GENERATOR

The engine-driven starter/generator is a single electric motor that serves as both starter and generator.

During engine start, the starter/generator is energized by the airplane batteries and optionally the ground power receptacle, and is referred to as the starter. As the engine reaches approximately 50% N_G, the starter/generator is reconfigured as a generator to serve as the primary source of 300-ampere 28 VDC electrical power for the airplane. The generator is limited to 200-amperes on the ground. Refer to Section 7.7.6 ENGINE START for more information.

The starter/generator is controlled by the Generator Control Unit (GCU) and the Master Control Unit (MCU) using the following switches:

PRE-START Switch Panel

STARTER GEN	ON/OFF switch that controls power to the GCU and starter/generator
START	Momentary switch that initiates the start sequence

TEST Switch Panel (under cover)

OV TEST	Simulates an over voltage condition.
GEN TRIP	Simulates a generator trip.
GEN RESET	Restores the generator to normal operation after it goes offline.

The amperage of the generator (GEN AMP) is displayed above the BATT 1 and BATT 2 indicators in the lower left corner of the MFD EIS.

If the GEN FAIL Warning displays, the generator is producing less than 5 amps and N_G is greater than 75%.

7.9.1.3 STANDBY ALTERNATOR

Secondary 28 VDC electrical power generation is with a 41-amp standby alternator manufactured by B & C Specialties. The standby alternator is controlled by the Alternator Control Unit (ACU).

The STBY ALTN switch controls power to the ACU and standby alternator. The ACU will bring the standby alternator online whenever the essential bus voltage drops below 28 VDC.

The amperage of the standby alternator (ALTN AMP) is displayed above the BATT 1 and BATT 2 indicators in the lower left corner of the PFD. If the ALTERNATOR ON Caution displays, the standby alternator is on and generating power.

7.9.1.4 GROUND POWER RECEPTACLE

The ground power receptacle allows connection of the airplane to a ground power unit.

The ground power controller gives voltage sense detection and over-voltage protection.

Use the following connection and disconnection sequence to prevent tripping of breakers in the cockpit.

7.9.1.4.1 CONNECTION

1. All cockpit switches.....OFF
2. GPU Plug .....CONNECT
3. GPU..... ON
4. BATT 1 Switch ..... ON
5. BATT 2 Switch .....ON (optional)
6. AIR COND Switch.....ON (if air conditioning is desired)

7.9.1.4.2 DISCONNECTION

1. AIR COND Switch.....OFF
2. BATT 2 Switch ..... OFF (if on)
3. BATT 1 Switch .....OFF
4. GPU.....OFF
5. GPU Plug .....DISCONNECT

CAUTION

IF USING A GPU FOR STARTING THE ENGINE, ENSURE IT PROVIDES A 28-VOLT REGULATED VOLTAGE WITH NEGATIVE ON GROUND AS WELL AS SUPPLYING 800 AMPERES MINIMUM AND 1,000 AMPERES MAXIMUM. REFER TO THE PLACARD NEAR THE GROUND POWER RECEPTACLE DOOR.

NOTE

The GPU needs to provide minimum of 200 amperes for operation of all equipment on the airplane other than the starter.

7.9.2 POWER DISTRIBUTION

The electrical power distribution system consists of the Primary bus in the Master Control Unit (MCU), the Essential bus, Avionics bus, Accessory buses 1 and 2, Auxiliary bus, Hot bus, relays, circuit breakers, and switches.

The Primary bus is the main electrical distribution path. Power from the batteries, ground power receptacle, generator and/or standby alternator is distributed via the Primary bus to the starter and secondary buses.

The Essential bus provides power to equipment considered essential for the safety of flight and is powered via two redundant paths protected by isolating diodes: from the Primary bus, and separately from Battery 1 and the Standby Alternator.

7.9.2.1 AUTOMATIC CROSS-TIE

The automatic cross-tie system connects Battery 1 and the Standby Alternator to the Primary bus. This is controlled by a relay that is energized by the X-TIE circuit breaker connected to the Essential bus. After activating the BATT 1 switch ON, the BATT 1 relay will close, energizing the Essential bus which in turn will energize and automatically close the cross-tie relay.

7.9.2.2 CIRCUIT BREAKERS

Circuit breakers are used to protect the electrical system. The circuit breakers are located in two cockpit circuit breaker panels, in the engine compartment on the MCU, and behind the aft pressure bulkhead near the air conditioning compressor.

Circuit breaker capacities are labeled on the top of each breaker. Circuit breakers can be in either an open (out) or closed (in) position. In the closed position the circuit is connected, and in the open position the circuit is disconnected. A circuit breaker will automatically open if a fault or overload occurs. To reset a circuit breaker, push it in.

CAUTION

DO NOT RESET A CIRCUIT BREAKER IN FLIGHT UNLESS IT IS ESSENTIAL FOR SAFE FLIGHT AND LANDING, AND IN THAT CASE RESET THE CIRCUIT BREAKER NO MORE THAN ONCE.

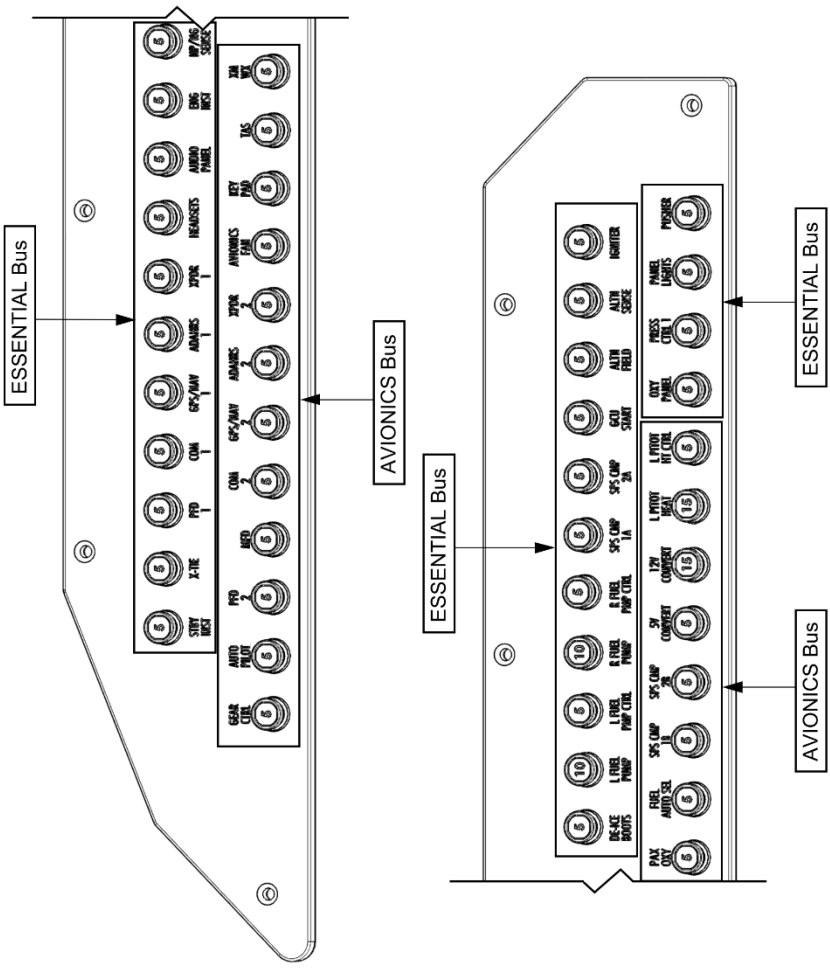

Left Circuit Breaker Panel

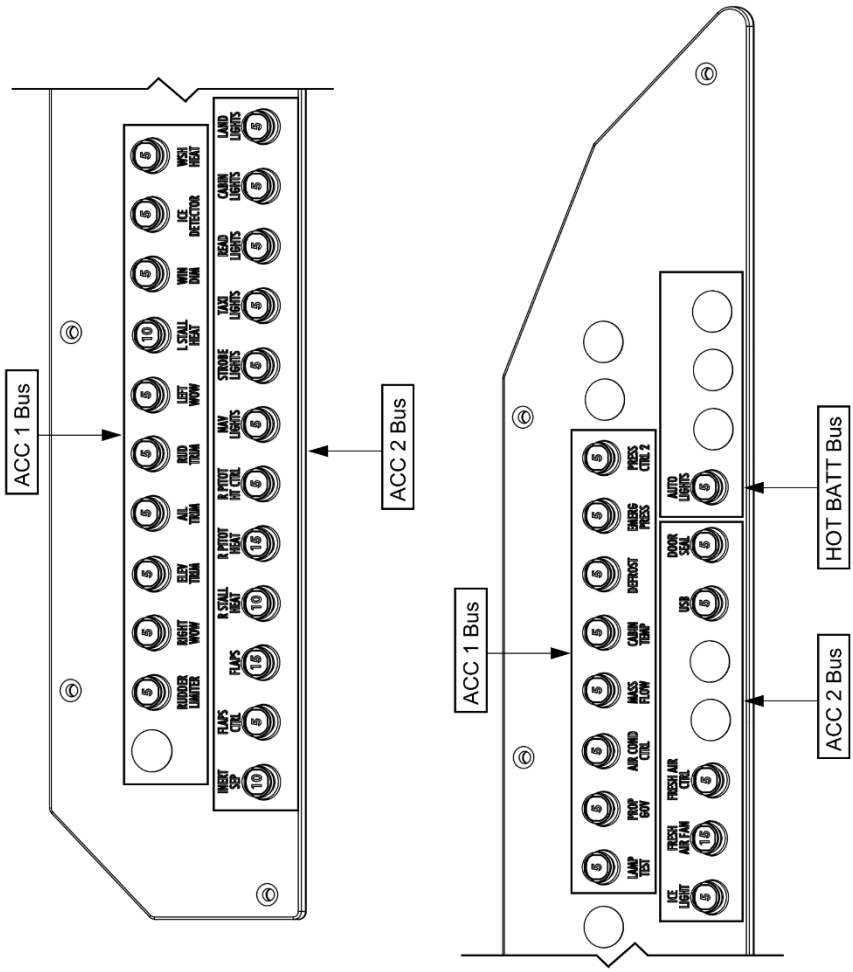

Right Circuit Breaker Panel

7.9.2.3 SWITCHES

The Pre-Start, Pre-Taxi, and Systems Switches are located above and to the left of the circuit breaker panel on the pilot's side.

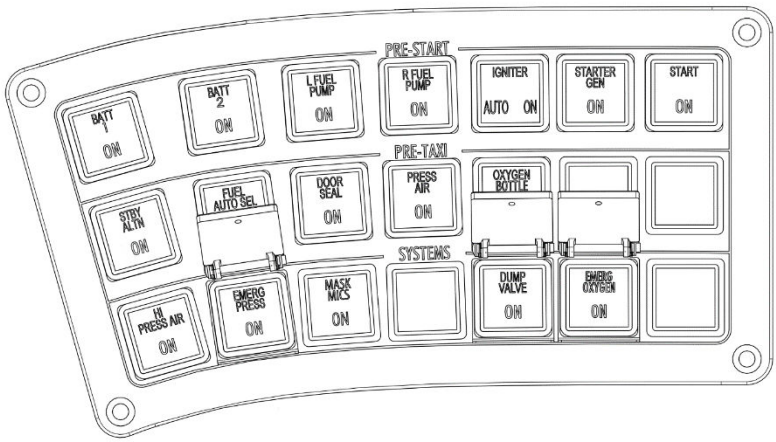

Pre-Start, Pre-Taxi, and Systems Switch Panel

The Lights and Ice Protection Switches are located above and to the right of the circuit breaker panel on the pilot's side.

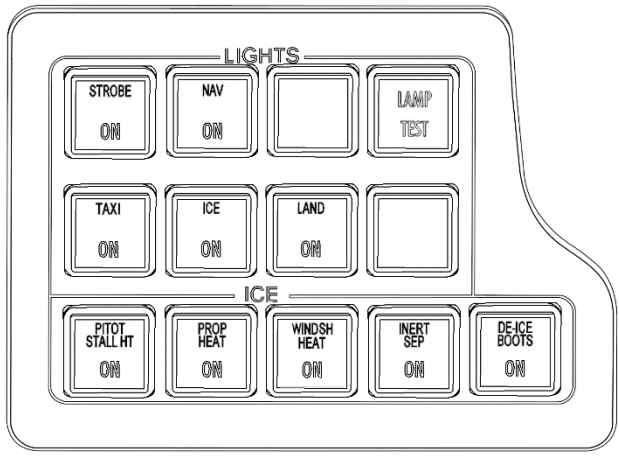

Lights and Ice Switch Panel

The STALL TEST, PROP GOV TEST, GEN RESET, GEN TRIP, and OV TEST switches are located behind a protective cover above the circuit breaker panel and to the extreme left of the instrument panel on the pilot's side.

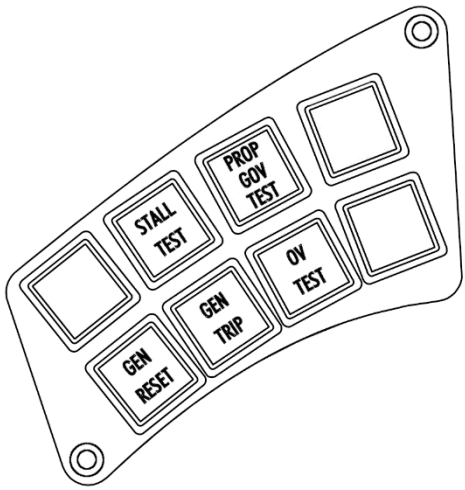

Test Switch Panel

The Ground Fresh Air, Air Cond, and Defrost switches are in the climate control panel immediately to the lower right of the MFD.

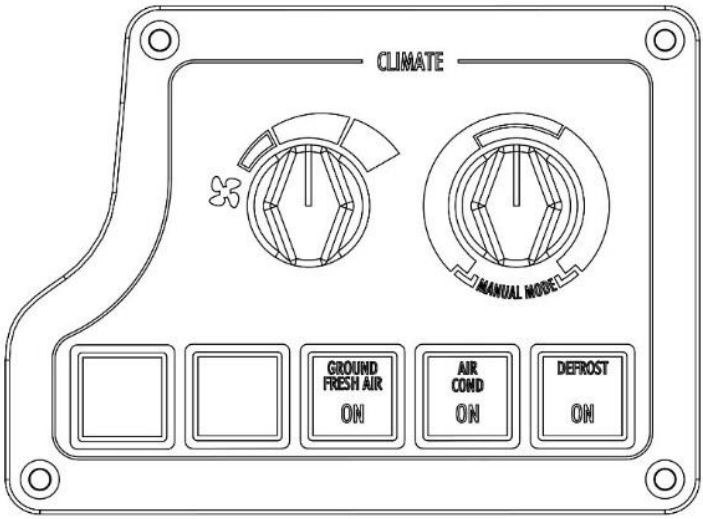

Climate Control Panel

7.10 LIGHTING

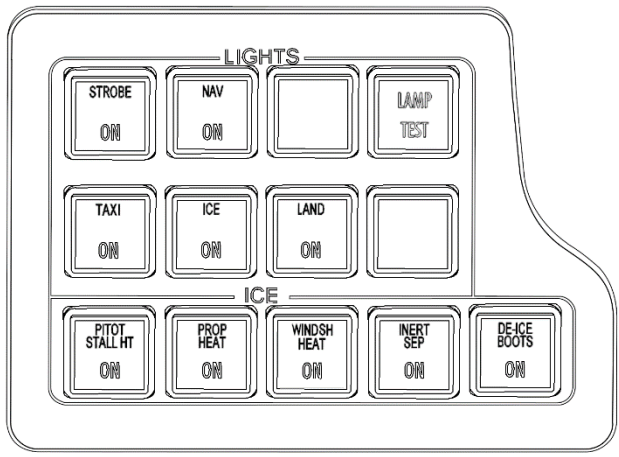

7.10.1 EXTERIOR LIGHTING

The airplane has two landing lights, two taxi lights, three combined navigation/strobe lights, and a wing leading edge icing inspection light. Switches for the external lights are located on the LIGHTS switch panel.

7.10.1.1 LANDING LIGHTS

Each wing tip is equipped with a Rigid Industries SR-Q2 Hyperspot LED landing light. Both landing lights are turned on or off using the LAND switch.

7.10.1.2 TAXI LIGHTS

Two Rigid Industries M SR-M2 diffused taxi lights are mounted on the nose landing gear. Both taxi lights are turned on or off using the TAXI switch.

7.10.1.3 NAVIGATION AND STROBE LIGHTS

The navigation and strobe lights are combined into a single light assembly mounted on each wing tip and on the top of the rudder. The navigation lights are turned on or off using the NAV switch, and the strobe lights are turned on or off using the STROBE switch.

7.10.1.4 WING LEADING EDGE ICING INSPECTION LIGHT

The wing leading edge icing inspection light is mounted on the left side of the fuselage and illuminates the left wing leading edge when activated. This light is turned on or off using the ICE switch.

7.10.2 INTERIOR LIGHTING

Interior lighting in the cabin consists of pilot controlled overhead cabin lighting and accent lighting, as well as individually controlled reading and cargo compartment lights. Lighting in the cockpit consists of pilot controlled red floodlighting and white instrument panel backlighting (including the circuit breaker panel), as well as individually controlled reading lights.

7.10.2.1 LAMP TEST

When switches in the switch panels are pressed they illuminate when “ON”. If the switch does not illuminate it indicates either a bad switch or a bad switch light.

Pressing the LAMP TEST switch on the LIGHTS switch panel will cause the lights in all of the switches to illuminate verifying each indicator light within the switch is functioning.

7.10.2.2 DIMMABLE WINDOWS

The six windows in the cabin, the window in the entry door, and the window in the emergency exit have an integral polarizing film that lets them be lightened or darkened as required.

At the base of each window is a control panel with a “+” button (makes the window darker), a “-“ button (makes the window lighter), an LED indicator of window opacity, and a blue LED that when lit indicates there is power to the window.

The pilot controls the dimmable windows using a three position knob. At the pilot’s discretion the windows can be set to fully dim, fully clear, or manual control (window control panel active). When set by the pilot to fully dim or fully clear the passengers have no control over the windows opacity.

7.10.2.3 DIMMING INTERIOR LIGHTING

All interior lighting may be dimmed using the dimmer control panel.

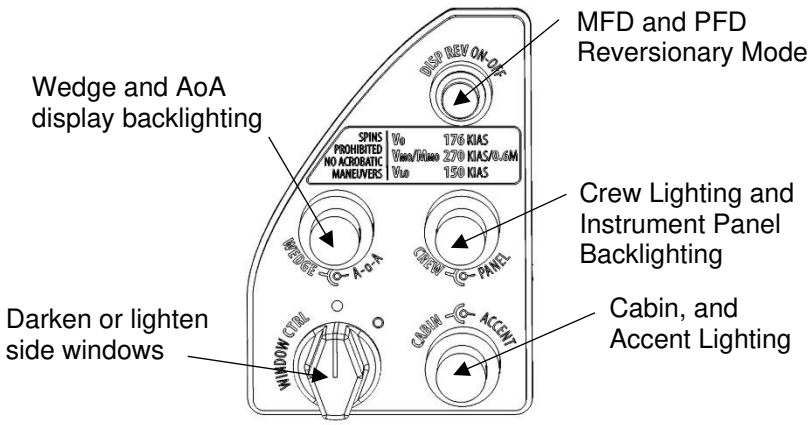

7.10.2.4 CABIN AND ACCENT LIGHTS

Cabin lighting consists of light strips in the overhead panel and lighting in door steps and is controlled with the CABIN dimmer. Accent lighting consists of a colored accent strip on the interior wall and is controlled with the ACCENT dimmer.

When the airplane power is off, the cabin and accent lighting illuminates automatically when the door is opened or closed. After activation the lights will extinguish after nine minutes. A button on the door (inside cabin) labeled “COURTESY LIGHT” may be pressed to manually turn the cabin and accent lighting on and restart the timer.

When airplane power is on, the cabin and accent lighting is powered continuously and may be dimmed using the dimmer control panel on the upper left side of the instrument panel.

7.10.2.5 READING AND CARGO COMPARTMENT LIGHTS

There are six LED reading lights (one per each crew and passenger) and one LED cargo light installed in the overhead finish panel.

Each light is individually operated using a push on/push off switch immediately adjacent to the light.

7.10.2.6 CREW, INSTRUMENT PANEL, AND CIRCUIT BREAKERS

Red light strips under the glare shield illuminate the entire crew area and are controlled with the CREW dimmer. Red spotlights in the overhead panel illuminate the engine controls and floor between the crew seats. These are controlled using a dimmer switch in the overhead panel.

The panels, switches, and levers on the instrument panel and the circuit breakers at the bottom of the instrument panel are all backlit. These lights may be controlled using the PANEL dimmer.

7.11 ENVIRONMENTAL CONTROL SYSTEM

The environmental control system provides heating, cooling, fresh air, and pressurization systems for the safety and comfort of the crew and passengers. It consists of a temperature-controlled bleed air system, a cabin pressurization system, a vapor-cycle air-conditioning system, and a ground fresh air system.

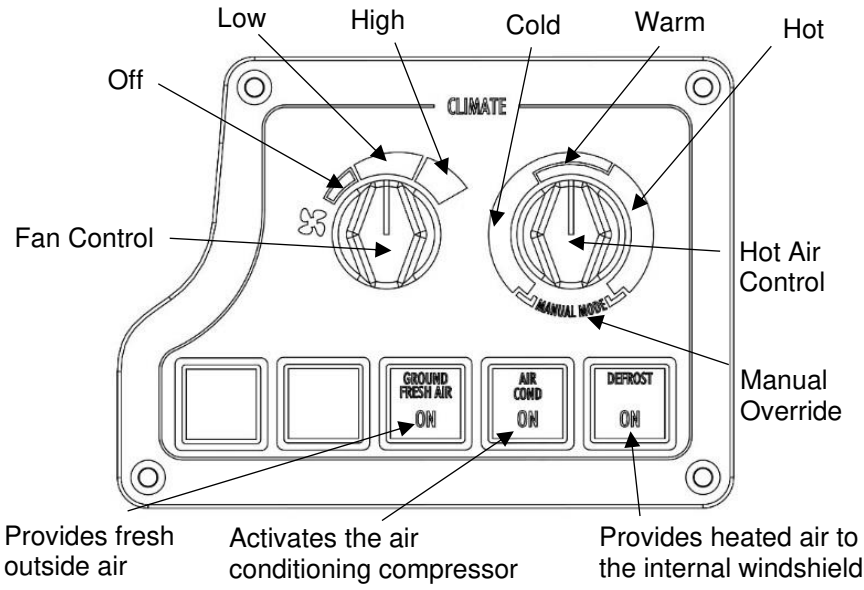

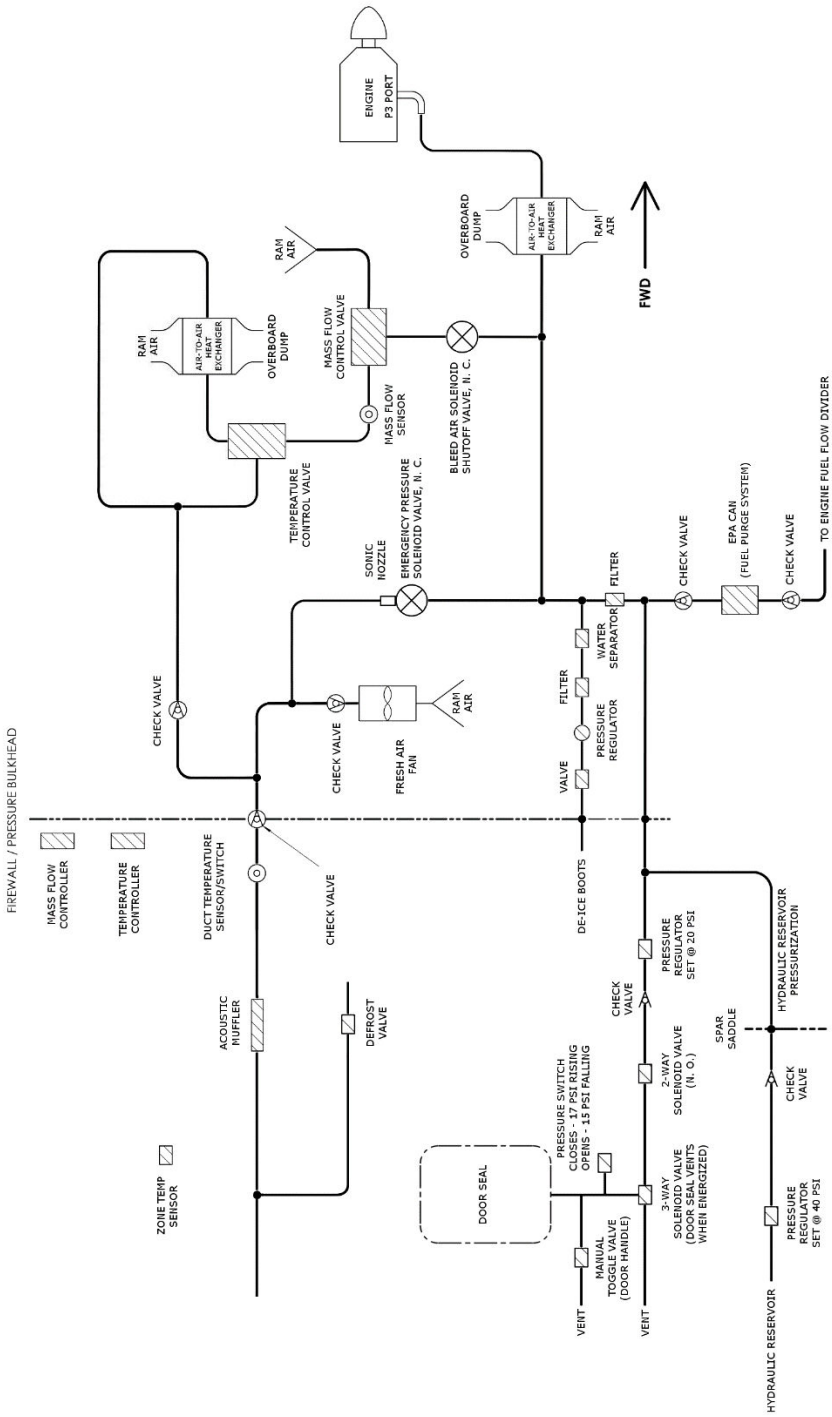

Environmental Control System
1 of 2

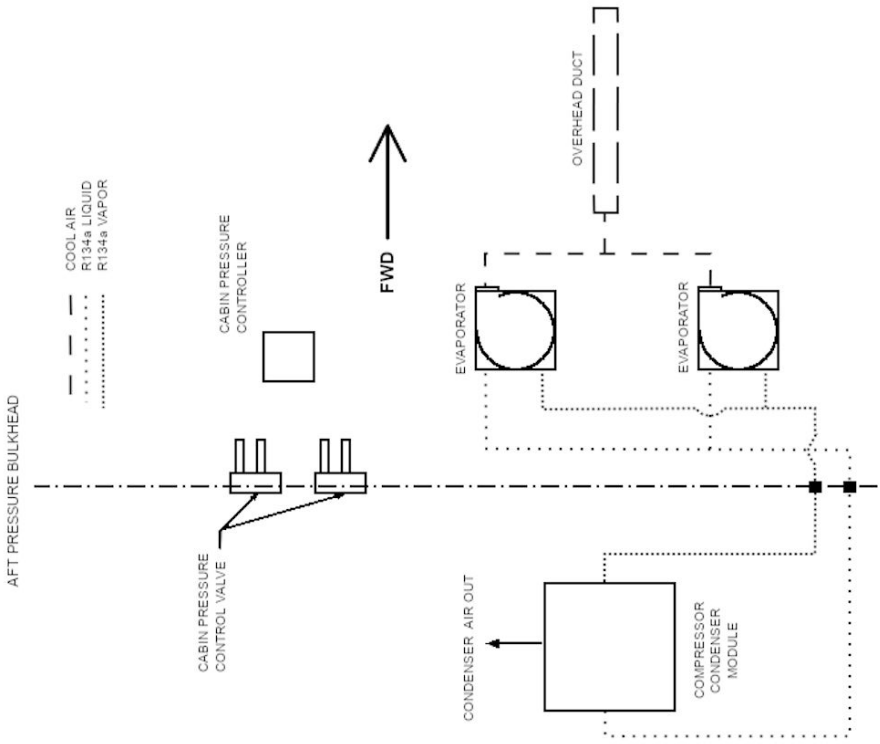

Environmental Control System
2 of 2

7.11.1 TEMPERATURE-CONTROLLED BLEED AIR SYSTEM

Warm pressurized air is provided to the cabin by the temperature-controlled bleed air system. This air heats the cabin and provides the mass air inflow required for pressurization.

P3 bleed air from the engine is routed through a primary air-to-air heat exchanger (intercooler) on the right side of the engine compartment, a bleed air shutoff solenoid valve, a mass flow control valve, a temperature control valve, optionally a secondary intercooler on the left side of the engine compartment, a series of check valves, and an acoustic muffler, to be distributed throughout the cabin via a number of vents along the floor.

The bleed air shutoff solenoid is controlled by switching PRESS AIR in the PRE-TAXI switch panel ON, which causes the bleed air shutoff solenoid to open.

The mass flow control valve is controlled by an electronic flow controller which receives input from an integrated flow control sensor to determine the actual mass flow of pressurized air to the cabin. Bleed air is also mixed with ambient air in the flow control valve to further reduce the temperature of the pressurized air. There are three mass flow settings: ground, normal, and high. The ground flow setting is set by the weight-on-wheels switch and is not sufficient to pressurize the airplane but will provide some mass air flow for heating purposes. The normal flow setting is used when airborne. The high flow setting can be selected by switching HIGH PRESS in the SYSTEMS switch panel ON. This setting is used for extra cabin heat or additional air flow as required.

The temperature control valve manages the final stage of cooling of the pressurized air. Based on the setting of the Hot Air Control knob on the climate control panel, the temperature control valve routes a portion of the pressurized air through the secondary intercooler to cool it further. The remainder of the warm pressurized air flows directly to the cabin.

The Hot Air Control has two manual settings and an automatic temperature range. Normal operation is to select automatic temperature control by positioning the Hot Air Control between the two extreme positions. This selects a constant cabin temperature to maintain based on the cabin air temperature sensor mounted on the aft pressure bulkhead near the ceiling of the cabin. If the system is unable to maintain a constant temperature, the Hot Air Control may be turned past the detent at either extreme position to manually select maximum cold or maximum hot pressurized air.

In the event of a bleed air/temperature control system failure, an emergency pressurization air system allows for P3 bleed air exiting the primary intercooler to be delivered directly to the cabin by switching EMER PRESS in the SYSTEMS switch panel ON. This opens the emergency pressure solenoid valve, which bypasses the normal flow and temperature control systems.

CAUTION

USE OF DEFROST TOGETHER WITH EMERG PRESS IS PROHIBITED.

The bleed air / temperature control system includes a duct temperature sensor inside the cabin. If the temperature of the pressurization air gets too high, the DUCT TEMP HIGH Caution will be displayed. Refer to Section 3A.8.8 DUCT TEMP HIGH.

7.11.2 CABIN PRESSURIZATION

Cabin pressure is maintained using the KAPS II pressurization system consisting of two outflow valves, and an auto-schedule controller. The outflow valves and their controller are mounted to the pressure bulkhead access panel aft of the rear passenger seats.

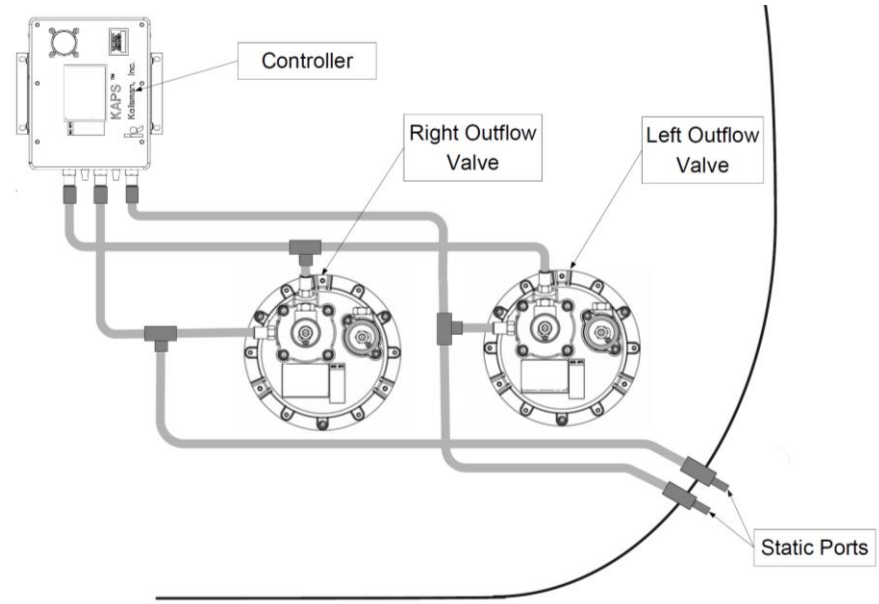

The pressurization system is always powered on. On the ground, the weight-on-wheels switch keeps the cabin unpressurized. In flight, the pressurization system automatically optimizes cabin pressure for passenger comfort while maintaining airplane safety limits. Cabin altitude at FL340 is approximately 9750 ft with a differential pressure of 6.6 psi.

Airplane altitude and landing-field altitude are provided to the controller by the Garmin G1000 NXi. The landing-field altitude is automatically or manually set in the TIMER/REF window on both PFDs. Cabin altitude and differential pressure are displayed in the MFD EIS display.

Both outflow valves feature an independent Maximum Differential Pressure Limiter (Delta-P Limiter) and a Maximum Altitude Limiter (MAL). A common pneumatic connection between valves balances the outflow between them. As a pair, these outflow valves meet all applicable regulations regarding maximum and negative differential pressure. The outflow valves automatically vent when cabin pressurization exceeds 6.8 ± 0.1 psi.

The controller includes a manual cabin dump function selected by setting the covered DUMP VALVE switch on the SYSTEMS switch panel ON. The DUMP VALVE switch disables the controller and opens all outflow valves, depressurizing the cabin. The maximum cabin pressure altitude achieved during the cabin dump is limited to a cabin altitude of 15,000 ft by the maximum altitude limiter valve (MAL).

An independent cabin pressure switch triggers the CABIN ALT HIGH Warning when cabin exceeds 10,000 ft pressure altitude

7.11.3 AIR CONDITIONING

The vapor-cycle air-conditioning system consists of a compressor and condenser located in the empennage aft of the pressure bulkhead, and two evaporators and fan assemblies located under the aft passenger seats. The air-conditioning system delivers cold air to the airplane through ducting up the sides and along the center of the roof of the cabin.

Fan speed is controlled using the Fan Control knob on the Climate Control Panel which has three settings: Off, Low, and High. These fans recirculate air throughout the cabin.

The AIR COND switch on the Climate Control Panel turns the air conditioning compressor either off or on to cool the recirculating air.

NOTE

This switch does not turn the compressor on unless the air conditioning fans have been turned on.

7.11.4 GROUND FRESH AIR

A fan located forward of the firewall on the left side of the airplane can be used to provide fresh air to the cabin. Air from this fan enters the cabin through the same ducts as the bleed air system.

The fan may be used to provide fresh air when the airplane is on the ground or during unpressurized flight to help clear smoke in the cabin in the event of an emergency.

The fan is operated using the GROUND FRESH AIR switch on the Climate Control Panel.

NOTE

The fan will run whenever the switch is pressed but is ineffective when the cabin is pressurized. The fan does not give sufficient airflow to overcome the pressurization of the cabin.

7.12 OXYGEN SYSTEM

This airplane has a continuous supply oxygen system designed for two crew members and up to four passengers. Oxygen is always available to crew members via always-on quick-don masks with on-demand regulators and integrated microphones. Quick connect outlets for the crew masks are located at the forward outboard sides of the cabin floor next to the seats. The integrated microphones in the crew masks can be selected by switching MASK MICS in the SYSTEMS switch panel ON.

Passenger oxygen is supplied by continuous-flow masks that automatically deploy from ceiling mounted cartridges when cabin altitude exceeds 14,000 ft. Passenger masks can be deployed manually by switching EMERG OXYGEN in the SYSTEMS switch panel ON. The hose to the passenger oxygen mask must be pulled gently to start the flow of oxygen to each mask.

The oxygen system has a 40 ft^3. capacity oxygen cylinder with regulator with a nominal working pressure of 1850 psi., a pressure transducer, a service port, a pressure gauge at the service port, an over-pressure/over-fill relief valve, a cabin altitude switch, two low pressure switches, distribution tubing, and oxygen masks.

Refer to Section 2 for oxygen use limitations and Section 5 for oxygen supply and duration charts.

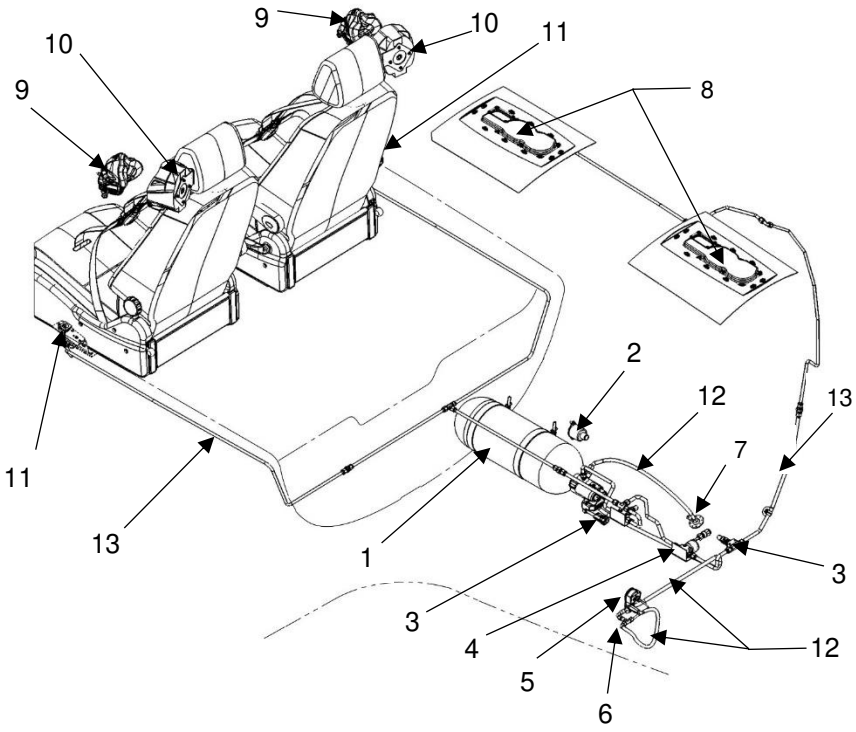

LEGEND

1. Oxygen Cylinder with Regulator
2. Altitude Switch
3. Low Pressure Switch
4. Solenoid Valve
5. Fill Port
6. Pressure Gauge
7. Over-Pressure/Over-Fill Relief Valve
8. Passenger Mask Delivery System
9. Crew Mask
10. Mask Holder
11. Quick Connect Coupler
12. High Pressure Flex Line
13. Low Pressure tubing

7.13 PITOT/STATIC SYSTEM

There are two unheated static ports, one each on the left and right sides of the fuselage just aft of the aft pressure bulkhead. The static ports provide static air pressure to the two ADAHRS and the standby instrument system during normal operation.

One heated pitot tube is installed under each wing near the wing tip. The pitot tube on the right wing provides dynamic pressure to the ADAHRS mounted on the right side of the instrument panel. The pitot tube on the left wing provides dynamic pressure to the ADAHRS mounted on the left side of the instrument panel and to the standby instrument system.

Static Source Error Correction (SSEC) is applied by the ADAHRS to meet Reduced Vertical Separation Minimum (RVSM) criteria. Corrected altitude and airspeed is displayed on both PFDs. The standby instrument system does not include SSEC, and will show slightly different airspeed and altitude then the primary displays.

Water trap/drains are located at each wing root for the pitot tubes and under the floor of the passenger compartment for the static ports.

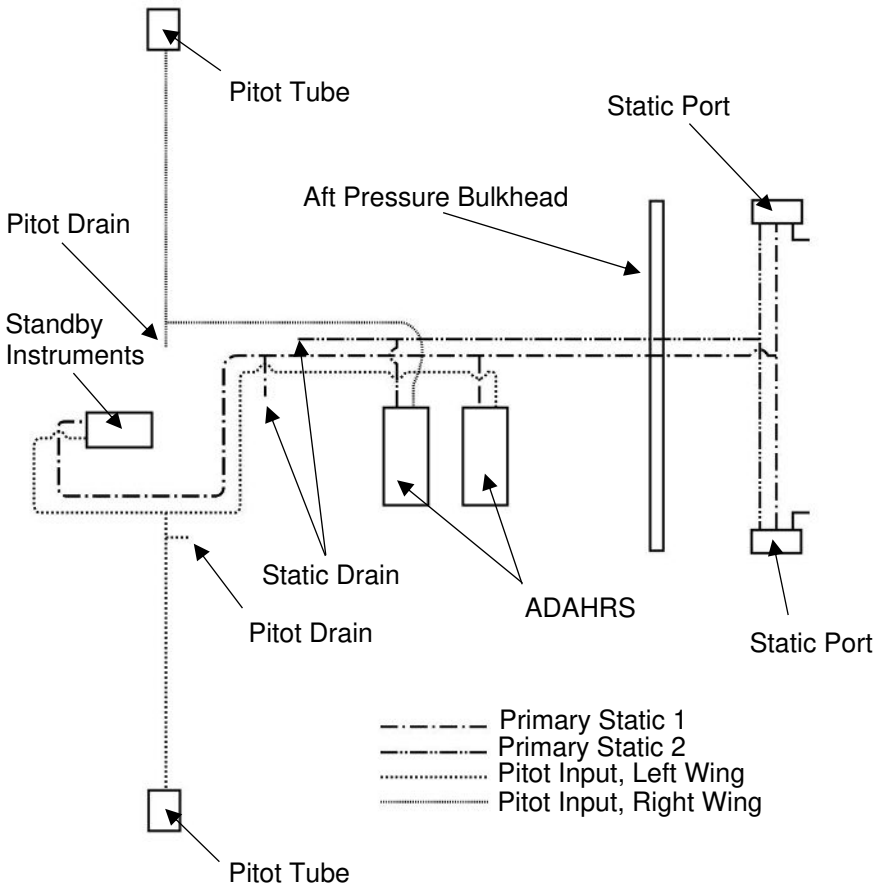

7.14 ICE PROTECTION

This airplane has ice protection for the pitot tubes and stall prevention system lift transducers, the wings and horizontal stabilizer, the windshield, the propeller, and engine air inlet.

WARNING

FLIGHT INTO KNOW ICING IS PROHIBITED.

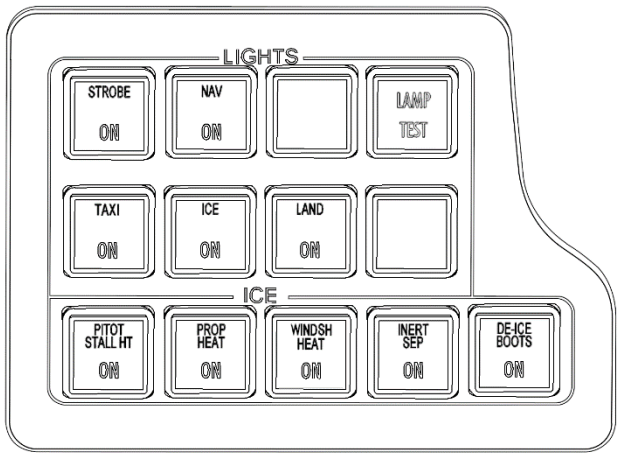

7.14.1 PROPELLER HEAT

Electrical heating boots are installed on the root of all the propeller blades. The system is activated by pushing the PROP HEAT switch on the ICE switch panel ON. While the propeller heat is on, the propeller blades are heated alternately two blades at a time based on the outside air temperature (OAT) as follows:

		Propeller Heat Cycle
OAT	Above 0°C	Propeller heat remains off.
	−16°C to 0°C	45 seconds ON for each set. 90 seconds OFF.
	Below −16°C	90 seconds ON for each set, alternating.

The longer heating cycle at temperatures below −16°C heats the ice/water on the propeller longer allowing it to be shed more effectively.

CAUTION

TURNING ON THE PROPELLER HEAT WHILE THE PROPELLER IS NOT MOVING MAY CAUSE DAMAGE TO THE PROPELLER HEAT SYSTEM.

NOTE

The PROP HEAT switch must be ON for any heat to be on the propeller blades.

NOTE

The PROP HEAT FAIL Caution will be displayed if the propeller heat is not functioning.

7.14.2 PITOT AND SPS LIFT TRANSDUCER HEAT

The pitot tubes and the SPS lift transducers are electrically heated. The heating elements are controlled by the PITOT STALL HT switch on the ICE switch panel and are continuously on when the switch is in the ON position.

The weight-on-wheels switch controls an on-ground relay which in turn controls the temperature of the heating elements. On the ground, the heating elements are approximately half as warm as they are in the air.

NOTE

If the on-ground relay becomes stuck in the closed position, the heating elements will remain at reduced heat during flight and the PITOT RELAY FAIL Caution will be displayed.

7.14.3 WING AND HORIZONTAL STABILIZER DE-ICE BOOTS

Pneumatic de-ice boots installed on the leading edge of the wings and the horizontal stabilizer cyclically inflate and deflate to dislodge and remove any ice accumulation. Air pressure comes from the engine P3 bleed air system.

The de-ice boots are activated by switching DE-ICE BOOTS in the ICE switch panel ON. The inflation/deflation cycle for the de-ice boots is a total of 60 seconds long: 6 seconds inflated and 54 seconds deflated.

Refer to Section 7.10.1.4 WING LEADING EDGE ICING INSPECTION LIGHT for information on the wing leading edge icing inspection light.

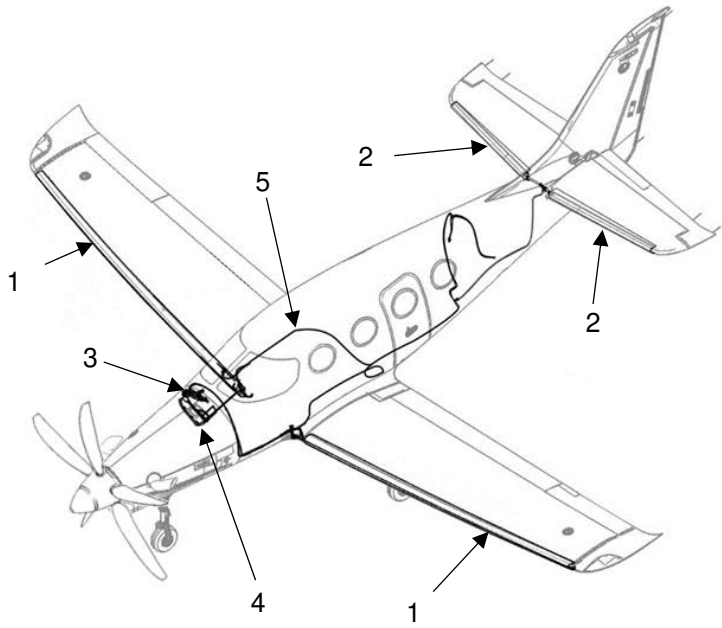

Legend

1. Wing De-Ice Boot
2. Horizontal De-Ice Boot
3. Inflation Manifold
4. Controller
5. Tubing

7.14.4 WINDSHIELD DE-ICE SYSTEM

The windshield de-ice system blows hot engine bleed air on the windshield to prevent or remove ice without damaging the windshield or its installation.

The windshield de-ice system is engaged by switching WINDSH HEAT in the ICE switch panel ON, which opens a solenoid allowing hot air to flow into the windshield de-ice manifold, out of the exhaust tubes, then over the windshield.

The windshield structure and surrounding bonded area are protected against thermal overheat by a combination of physical insulation and convective cooling from ambient airflow when the outside air temperature is below 5°C.

7.14.5 ENGINE AIR INLET ICE PROTECTION

Refer to Section 7.7.9 AIR INDUCTION for information on the engine air intake inertial separator system.

7.14.6 ICE DETECTOR

An optical ice detector probe is installed on the underside of the left wing leading edge. When ice is present on the detector probe, an ICE caution is displayed. If ice is present on the detector probe and the pilot turns the PROP HEAT and DE-ICE BOOTS switches ON, the ICE caution will be replaced with an ICE advisory. The ICE caution and advisory alerts are removed when ice is no longer present on the ice detector probe.

NOTE

The ice detector is for supplemental information only and not to be used as a primary method of ice detection. The ice detector does not drive or engage any ice protection systems, pilot action is still required in accordance with the AFM if inadvertent icing is encountered.

7.15 STALL PREVENTION SYSTEM (SPS)

The stall prevention system (SPS) consists of two lift transducers, one in the leading edge of each wing, connected to two independent lift computers, a control column shaker, and a control yoke pusher servo connected to the elevator cable.

Each lift transducer senses the deflection of its vane providing a continuous sensing of the airflow stagnation point and angle-of-attack. Each lift computer calculates a stall warning margin based on input from the lift transducers, flap position, and barometric altitude.

As the airplane approaches a stall condition, either lift computer can activate the control yoke shaker to warn the pilot and/or copilot, and the STICK SHAKER Warning is displayed with the “STALL-STALL-STALL” aural annunciation.

If the angle-of-attack on both wings reaches a critical level, the pusher servo is activated to move the control yoke forward to immediately reduce angle-of-attack and prevent a stall, and the STICK PUSH Warning is displayed with the “PUSH-PUSH-PUSH” aural annunciation.

The PUSHER ICE MODE increases the stall warning speed and decreases the critical angle of attack of stick pusher activation in any of the following potential icing conditions:

- Flight above FL180
- Propeller heat is on
- De-ice boots are on

NOTE

The PUSHER ICE MODE Advisory will display when the pusher ice mode is on below FL180.

The control yoke push servo can be temporarily disabled by pressing and holding the AP/TRIM DISC switch on either control yoke.

NOTE

Pressing and holding the AP/TRIM DISC switch for more than 1.25 seconds will disable the trim system. If you desire to restore the trim system after releasing the AP/TRIM DISC switch, press and release the TRIM RESET switch.

7.16 AIRFLOW MODIFICATION DEVICES

Wing leading edge stall strips, airflow turbulators in front of the ailerons, and vortex generators on the underside of the wings are the devices used for modification of the airflow over and under the wings to improve flight handling characteristics. None can be missing for flight.

There are two neoprene leading edge stall strips bonded to the leading edge de-ice boot on each wing. Pre-flight inspection includes checking that these stall strips are present and are not starting to disbond.

There are twenty turbulators bonded on top of each wing in front of the aileron. The turbulators are made of aluminum extruded into a triangular strip 2” long by 0.3” wide by 0.15” tall.

There are six vortex generators bonded on the underside of each wing. The vortex generators are made of aluminum sheet formed into an angle approximately 3” long by 1” wide by 1” tall.

There are six turbulators bonded to the leading edge de-ice boot on each side of each Stall Prevention System lift transducer. The turbulators are made of rubber in a triangular shape that is 1” wide at the base.

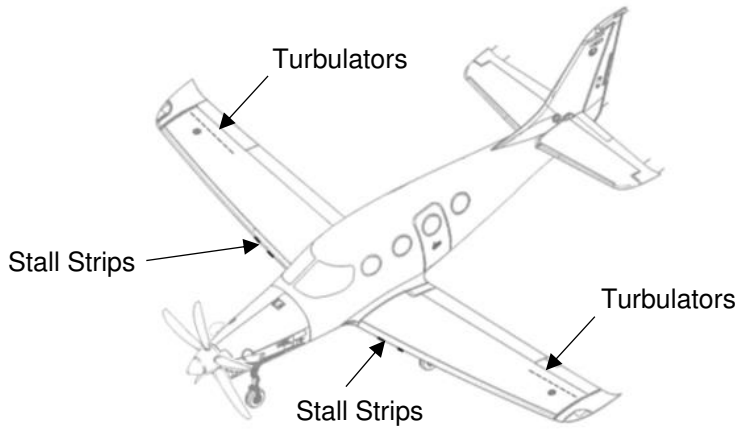

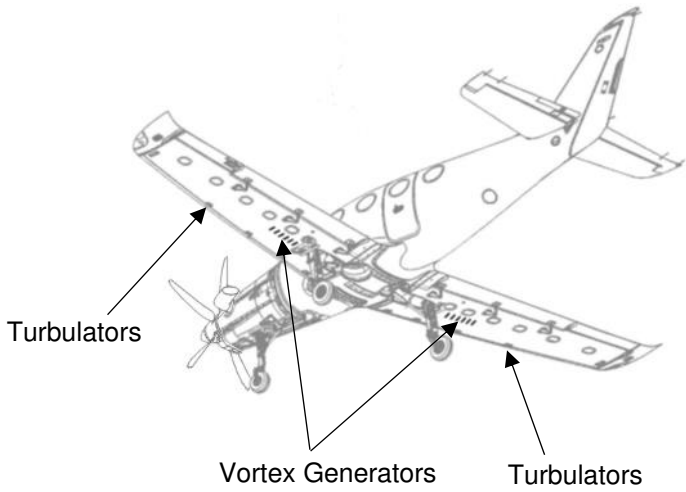

7.17 STATIC WICKS

Static electricity has a tendency to build up on the surface of the airplane and can cause degradation of radio communications during flight. Static wicks are installed at the trailing edge of the wing tips (2 each), the elevator (2 at each tip), and the rudder (2) to discharge this static electricity into the atmosphere.

7.18 FIRE EXTINGUISHER

This airplane is equipped with a 1211/1301 Halon blend fire extinguisher approved for use on class A (ordinary combustibles), B (flammable or combustible liquids), and C (electrical equipment) fires.

The extinguisher is mounted with a quick release bracket within the underfloor compartment between the pilot's and copilot's seats.

CAUTION

DO NOT BLOCK ACCESS TO THE FIRE EXTINGUISHER COMPARTMENT. THE DOOR TO THE COMPARTMENT MUST BE KEPT CLEAR.

7.19 AVIONICS

7.19.1 GARMIN G1000 NXi INTEGRATED FLIGHT DECK

Refer to the latest revision of the Garmin G1000 NXi Pilot's Guide (p/n 190-02289-XX, where X can be any digit from 0 to 9) for complete description and operation procedures for the Garmin G1000 NXi system and its components.

The Hour Meter is located on the MFD Aux Page Group on the Utility Page. The Hour Meter begins counting when the system enters into Air Mode and stops when the system enters into Ground Mode. Air Mode is triggered ON when True Air Speed (TAS) is greater than 50kts or GNSS Ground Speed is greater than 30kts. Ground Mode is triggered ON when neither True Air Speed or GNSS Ground Speed conditions occur.

7.19.2 GARMIN GFC 700 AUTOMATIC FLIGHT CONTROL SYSTEM (AFCS)

Refer to the latest revision of the Garmin G1000 NXi Pilot's Guide (p/n 190-02289-XX, where X can be any digit from 0 to 9) for complete description and operation procedures for the Garmin GFC 700 Automatic Flight Control System (AFCS) and its components.

The GFC 700 AFCS is a dual-channel, fail-passive, fully digital flight control system comprised of smart servos and trim adapters controlled by software functions spread across several units of the G1000 NXi GIFD.

The system consists of the following components:

- GMC 710 Mode Controller
- Flight Management System Keyboard
- Integrated Avionics Units
- Pitch, Roll, and Yaw Servos
- Pitch and Yaw Trim Adapters
- AP/TRIM DISC Switch
- CWS Switch
- TO/GA Switch
- Auto-Level Button

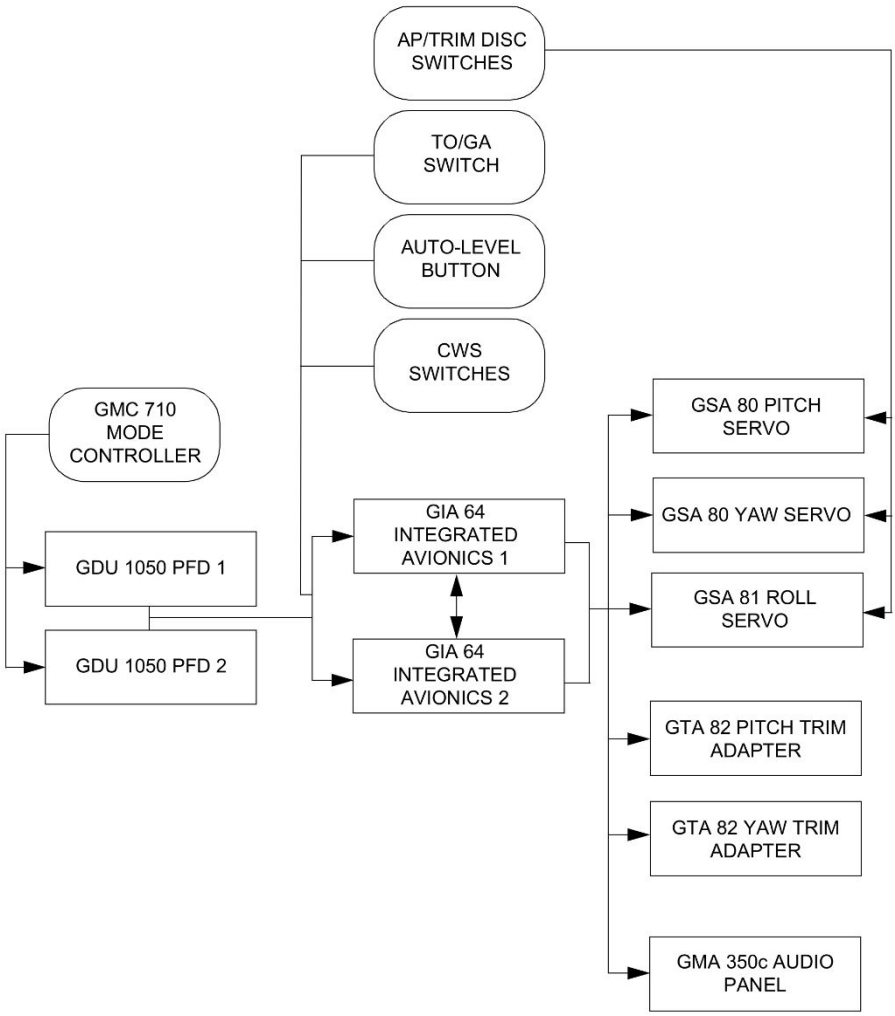

The GFC 700 AFCS can be divided into three primary operating functions:

Flight Director

Dual Flight Directors, one calculated in each Integrated Avionics Unit, provide pitch and roll commands to the AFCS system and display them on the PFDs. With the Flight Director activated, the pilot can hand-fly the airplane to follow the path shown by the command bars. The active Flight Director is selected on the GMC 710 Mode Controller and provides:

- Vertical and lateral mode selection and processing
- Command bars showing pitch/roll guidance
- Pitch and roll commands to the autopilot

Autopilot

Autopilot operation occurs within the pitch and roll servos, and the pitch trim adapter. The autopilot provides automatic flight control in response to flight directory steering commands, Attitude and Heading Reference System (AHRS) attitude and rate information, and airspeed.

Yaw Damper

Yaw Damper operation is provided by the yaw servo and yaw trim adapter. The Yaw Damper provides Dutch Roll damping and turn coordination in response to yaw rate, roll angle, lateral acceleration, and airspeed.

7.19.2.1 FUNCTIONAL LIMITS

The autopilot and Flight Director (FD) will not command pitch and roll beyond the Command Limits.

Axis	Autopilot Command Limit
FD Pitch Command Limits	+20°, –25°
FD Roll Command Limits	+/-60°

The autopilot will not engage beyond the Engagement Limits.

Axis	Autopilot Engagement Limit
Pitch	±50°
Roll	±75°

If the autopilot is engaged beyond the command limits (up to engagement limits), it will be rolled and/or pitched to within the command limits, and an altitude loss of 1000 feet or more can be expected while attitude is established in the selected mode.

7.19.2.2 CONTROLS

GMC 710 Mode Controller

The GMC 710 AFCS Mode Controller, located above the MFD, provides primary control of autopilot modes. A control wheel is included on the GMC to adjust flight director pitch reference. Through the mode controller, the Integrated Avionics Units serve the function of converting operator commands to logic signals for the roll and pitch functions.

NOTE

For more information about the autopilot modes, refer to the Garmin G1000 NXi Pilot's Guide.

AP/TRIM DISC Switch

The AP/TRIM DISC Switch on the pilot and co-pilot control yokes is used to disengage the autopilot, mute the aural alert associated with an autopilot disconnect, and interrupt Electronic Stability & Protection (ESP), Manual Electric Trim, Yaw Damper, and SPS Pusher.

Control-Wheel Steering (CWS) Switch

The Control-Wheel Steering (CWS) switch allows manual control of the airplane while the autopilot is engaged and synchronizes the flight director command bars with the current aircraft pitch when released (for select lateral and vertical modes). CWS also interrupts Electronic Stability & Protection (ESP).

Take-Off/Go-Around (TO/GA) Switch

The Take-Off/Go-Around (TO/GA) switch on the POWER lever is used to select Take-Off (TO) and Go-Around (GA) modes on the Flight Director.

Pressing and holding the TO/GA switch will illuminate the Before-Takeoff Configuration Checklist in the Wedge annunciation panel. All systems configured correctly for takeoff will be illuminated in green. Any system not configured for takeoff will be illuminated in red.

Auto-Level Button

The Auto-Level Button, located on the instrument panel next to the landing gear switch, can be used by the pilot to activate the autopilot and provide assistance in leveling the aircraft.

7.19.2.3 ELECTRIC TRIM

The GFC 700 AFCS controls elevator and rudder trim through the pitch and yaw trim adapters, respectively. Aileron trim is not integrated with the AFCS.

Manual Electric Trim (MET) input from the pilots is routed through the trim adapters and will cause the autopilot and/or yaw damper to disconnect in response to manual trim input.

With the autopilot engaged, the GFC 700 AFCS applies pitch and yaw Automatic Electric Trim (AET) to relieve control force pressure on the servos.

Pitch trim monitoring is provided by both Integrated Avionics Units. In the event a trim monitor detects erroneous power being applied to the pitch trim actuator during AET operation, it will automatically disconnect the pitch trim system and display an AUTO PTRM FAIL caution. The AUTO PTRIM FAIL caution and the pitch trim system can be reset with the TRIM RESET Switch. In the event a trim monitor detects erroneous power being applied to the pitch trim actuator during MET operation, a MAN PTRM FAIL caution will be displayed and the pilot may press and hold the AP/TRIM DISC switch to disconnect the pitch trim system (see 3A.8.20 MAN PTRM FAIL) . The MAN PTRM FAIL caution will be reset only when the G1000 NXi system is powered down.

7.19.2.4 AUTOMATIC FLIGHT PROTECTION

The GFC 700 AFCS provides the following automatic flight protection features:

- Overspeed Protection (OSP)
- Underspeed Protection (USP)
- Electronic Stability & Protection (ESP)
  - Roll Protection
  - Pitch Protection
  - Electronic Stability Overspeed Protection (ESOSP)

NOTE

For more information about the automatic flight protection features, refer to the Garmin G1000 NXi Pilot's Guide.

7.19.3 ADS-B

The G1000 NXi incorporates dual Mode S extended squitter transponders to provide ADS-B Out capability. The system transmits ADS-B Out information on 1090 MHz. These components are interfaced with the G1000 NXi GNSS/SBAS receivers, altitude source, heading source, audio panel, and air/ground switch.

Both transponders perform the following functions:

- Transmission of ADS-B Out data on 1090 MHz extended squitter.
- Integration of data from internal and external sources to transmit the following data per 14 CFR §91.277:
  - GNSS Position, Altitude, and Position Integrity
  - Ground Track and/or Heading, Ground Speed, and Velocity Integrity
  - Air Ground Status
  - Flight ID, Call Sign, ICAO Registration Number
  - Capability and Status Information
  - Transponder squawk code, IDENT, and emergency status
  - Pressure Altitude Broadcast Inhibit
  - Diversity (top and bottom) antennas

If an XPDR1 system message advisory is displayed in combination with an XPDR2 message, the system does not meet ADS-B Out requirements.

Pressure Altitude Broadcast Inhibit (PABI) shall only be enabled when requested by ATC while operating in airspace requiring an ADS-B Out compliant transmitter. PABI is enabled by selecting the transponder to ON mode.

The G1000 NXi incorporates the Garmin GTX 345 DR Transponder to provide ADS-B In traffic capability.

- Reception of ADS-B In data on 1090 MHz ES and 978 MHz UAT directly from another aircraft or from a ground station.
- Provides ADS-B traffic information and alerting to the pilot via the interfaced display and audio output.

In the event of failure of the GTX 345 DR, the G1000 NXi incorporates the Garmin GTS 825 Traffic Advisory System or optional GTS 850/855 Traffic Alert and Collision System to provide ADS-B In traffic capability on 1090 MHz ES.

The G1000 NXi incorporates the Garmin GTX 345 DR Transponder to provide ADS-B In weather capability.

7.19.4 L3 AVIONICS ESI-500 ELECTRONIC STANDBY INSTRUMENT SYSTEM

Refer to the latest revision of the L3 Avionics Pilot's Guide for the ESI-500 (p/n 0040-15000-01) for complete description and operation procedures for the ESI-500 Electronic Standby Instrument system.

The Standby Instrument is powered on automatically while airplane power is on.

7.20 EMERGENCY LOCATOR TRANSMITTER (ELT)

This airplane is equipped with a self-contained Kannad AF Integra Emergency Locator Transmitter (ELT) system installed on a shelf aft of the pressure bulkhead on the left side of the empennage. The transmitter uses internal and remote antennas and has a built in GPS providing a more accurate position to be transmitted.

The ELT can be activated either automatically when a crash occurs or manually using the ELT remote control panel located on the upper right side of the instrument panel.

The transmitter is designed to transmit on two frequencies (121.5 and 406 MHz). The 121.5 MHz frequency is mainly used for homing in the final stages of the rescue operations. The 406 MHz frequency is used by the COSPAS-SARSAT satellites for precise pinpointing and identification of the aircraft in distress.

Once activated, the transmitter operates continuously on 121.5 MHz, and a digital message is transmitted on 406.037 MHz every 50 seconds.

7.20.1 ELT SELF TEST

It is recommended by the manufacturer to test the ELT to detect any possible failure. A self-test should be performed regularly by the pilot or maintenance personnel from the cockpit (Remote Control Panel). It is recommended to perform a self-test at least once every six months but it should not be done more than once a month.

NOTE

Each self-test consumes energy from the battery. Should self-tests be carried out more often than the maximum allowed, the battery life-time might be shorter than specified.

NOTE

The self-test should be conducted only in the first five (5) minutes of any hour and then only for a maximum of three audio sweeps of the transmitter.

ELT Self-Test Procedure:

1. Check that the antenna is correctly connected. Do not perform self-test without antenna connected.
2. Tune aircraft radio to 121.5 MHz and ensure you can hear it.
3. Press RESET & TEST on the Remote Control Panel (ensure that the switch returns to the ARM position).
4. Listen for the buzzer or watch the LED - it operates during the whole self-test procedure.
5. Close to the end of self-test, a short (3 sweeps) 121.5 transmission is made. Verify you hear this on the airplane radio.
6. 10 seconds after the beginning of the self-test, the test result is displayed with the red visual indicator and the buzzer will sound:
    a. One long flash (duration 1 seconds) indicates that the system is operational and that no error conditions were found.
    b. A series of short flashes (200 ms) indicates the test has failed.

If the ELT self-test procedure fails, the ELT requires maintenance.

7.21 OPTIONAL EQUIPMENT

Refer to Section 9 SUPPLEMENTS.

SECTION 8

HANDLING, SERVICING, AND MAINTENANCE

TABLE OF CONTENTS

8.1 GENERAL 3
8.2 IDENTIFICATION PLATE 3
8.3 PUBLICATIONS 3
8.4 GROUND HANDLING 4
8.4.1 TOWING 4
8.4.2 PARKING 4
8.4.3 SECURING THE AIRPLANE 4
8.5 JACKING AND LEVELING 4
8.6 STORAGE 5
8.6.1 FLYABLE STORAGE 5
8.6.2 LONG TERM STORAGE 5
8.7 SERVICING 6
8.7.1 ENGINE OIL 6
8.7.2 FUEL 7
8.7.3 LANDING GEAR 8
8.7.4 OXYGEN SYSTEM 8
8.8 GROUND POWER 10
8.8.1 CONNECTION 11
8.8.2 DISCONNECTION 11

This page Intentionally Left Blank

8.1 GENERAL

This section contains the procedures for ground handling of the airplane as well as recommendations and procedures for routine care of the interior and exterior.

The owner or operator of the airplane is responsible for the continued airworthiness of the airplane including but not limited to the maintenance of the logbooks, performance of required inspections in a timely manner, and accomplishment of mandatory service directives and part replacements within the specified time.

8.2 IDENTIFICATION PLATE

The airplane serial number, make, model, Type Certificate (TC) number, year of manufacture, and Production Certification (PC) number is contained on the airplane identification plate on the tail cone of the airplane. The serial number is also listed on the cover page of the Pilot's Operating Handbook and FAA Approved Flight Manual.

8.3 PUBLICATIONS

When the airplane is delivered to the owner, a Pilot's Operating Handbook and FAA Approved Flight Manual, the Maintenance Manual, the Garmin G1000 NXi Pilot's Guide (p/n 190-02289-XX, where X can be any digit from 0 to 9), Garmin G1000 NXi Cockpit Reference Guide (p/n 190-02290-XX, where X can be any digit from 0 to 9), and the L3 Avionics ESI-500 Electronic Standby Instrument System Pilot's Guide (p/n 0040-15000-01) are also provided.

NOTE

The latest revision of the Pilot's Operating Handbook and FAA Approved Flight Manual, the latest revision of the Garmin G1000 NXi Cockpit Reference Guide, and the latest revision of the L3 Avionics ESI-500 Electronic Standby Instrument System Pilot's Guide must be available to the pilot.

8.4 GROUND HANDLING

8.4.1 TOWING

Ground handling of the airplane must be done by trained qualified personnel.

CAUTION

DO NOT TRY TO MOVE THE AIRPLANE BY PUSHING OR PULLING ON THE PROPELLER. SERIOUS DAMAGE TO THE PROPELLER MAY OCCUR.

CAUTION

DO NOT EXCEED THE ROTATION LIMITS OF THE NOSE WHEEL WHICH ARE 60° LEFT AND RIGHT OF CENTER. ROTATING THE GEAR BEYOND 60° WILL DAMAGE THE NOSE GEAR.

8.4.2 PARKING

When parking the airplane, maneuver onto an appropriate flat level area and head the airplane into the wind if possible.

8.4.3 SECURING THE AIRPLANE

1. Chock the main gear tires on the forward and aft sides of each tire.
2. Install tie-down rings (Epic p/n FK07100002 or similar) into each of the three jack points then attach sufficiently strong ropes or chains. Secure each rope or chain to a ramp tie-down or mooring rod.
3. Install the pitot tube covers.
4. Install the propeller stays and inlet covers.

8.5 JACKING AND LEVELING

Refer to the latest revision of the Epic E1000 Maintenance Manual, p/n SK05000000.

8.6 STORAGE

8.6.1 FLYABLE STORAGE

8.6.1.1 STORAGE FOR UP TO 7 DAYS

- Secure the engine in accordance with the Pratt & Whitney Maintenance Manual.
- Keep the fuel tanks full.
- Keep the batteries fully charged.

8.6.1.2 STORAGE FOR 8 TO 28 DAYS

- Secure the engine in accordance with the Pratt & Whitney Maintenance Manual.
- Keep the fuel tanks full.
- Keep the batteries fully charged.

8.6.2 LONG TERM STORAGE

Refer to the latest revision of the Epic E1000 Maintenance Manual, p/n SK05000000.

8.7 SERVICING

8.7.1 ENGINE OIL

Refer to the current revision of Pratt & Whitney PT6A-67A Maintenance Manual P/N 3036132. The following steps are recommended by Pratt & Whitney for best results.

CAUTION

TO AVOID OVERFILLING THE OIL TANK, THE OIL LEVEL SHOULD BE CHECKED WITHIN 30 MINUTES OF ENGINE SHUTDOWN. AFTER 30 MINUTES THE ENGINE SHOULD BE RUN BEFORE CHECKING THE OIL LEVEL. THE IDEAL TIME TO INSPECT THE OIL LEVEL IS 15 TO 20 MINUTES AFTER ENGINE SHUTDOWN.

NOTE

The airplane should always be parked on level ground with the engine off when inspecting the oil level.

Oil System Replenishing

1. Open the access door on the upper left side of the cowling.
2. Remove then wipe the oil dipstick with a clean cloth.
3. Install the dipstick then lock, remove, and examine the dipstick.
4. Check the oil level against the marking on the dipstick.
5. Service as necessary using oil type conforming to MIL-PRF-23699G, Type II (5cSt) and as specified in the latest revision of Pratt & Whitney Service Bulletin No. 14001. The following list of approved oils is current as of the time of publication.

    - AeroShell Turbine Oil 500
    - AeroShell Turbine Oil 560
    - Royco Turbine Oil 500
    - Mobile Jet Oil II
    - Castrol 5000
    - BP/Eastman Turbo Oil 2380
    - Turbonycoil 600

NOTE

Service the oil to the level that results in acceptable consumption, down to 3 US quarts (2.84 liters) below maximum if necessary. For engines with an oil sight gauge keep the level within the green band. This practice is acceptable due to the large usable oil quantity, provided the oil level is monitored in accordance with the engine maintenance manual and ensuring the consumption allowance and operation are within the recommended oil temperature and pressure.

6. After the oil level has been verified install the dipstick.
7. Close then secure the access door in the cowling.

Maximum oil consumption should remain below 0.025 US gal/hr (0.09 L/hr). Higher oil consumption should be referred to maintenance for evaluation.

CAUTION

DO NOT MIX DIFFERENT VISCOSITIES OR SPECIFICATIONS OF OIL AS THEIR DIFFERENT CHEMICAL STRUCTURE CAN MAKE THEM INCOMPATIBLE.

8.7.2 FUEL

8.7.2.1 SAFETY PRECAUTIONS

1. A fire extinguisher must be available and accessible.
2. Ground the airplane nose gear tow mount bracket and the fuel service equipment prior to fueling and defueling the airplane.
3. Ensure fuel tank vents are unobstructed.
4. Ensure airplane fueling operations are over 100 feet (30.48 meters) away from energized electrical equipment capable of producing sparks.
5. No open flames within 100 feet (30.48 meters) of the airplane or fueling vehicle.
6. No smoking 100 feet (30.48 meters) of the airplane or fueling vehicle.
7. Do not operate electrical equipment or electrical switches during fueling or defueling of the airplane.
8. Sample the fuel for any moisture or contaminates after each refueling and before the first flight of the day. Wait at least five minutes for any moisture and sediment to settle before flushing fuel drain valves.

8.7.2.2 REFUELING RECOMMENDATIONS

1. Park the airplane on level ground in a well-ventilated location outside of the hangar.
2. Ensure the airplane remains stationary using wheel chocks on the main wheels.
3. Electrically ground the airplane by connecting a grounding cable from the fuel service nozzle to the nose gear tow bracket.
4. Place a rubber protective mat on the wing and around the fuel tank filler port.

CAUTION

TO PREVENT DAMAGE TO THE INLET FLANGE DO NOT ALLOW THE FUEL NOZZLE AND HOSE TO REST UNSUPPORTED ON THE WING. DO NOT ALLOW THE FUEL NOZZLE TO COME IN CONTACT WITH THE BOTTOM OF THE INSIDE OF THE WING OR THE FUEL LEVEL SENSOR PROBE.

5. Remove the fuel cap then fill the wing to the desired level.

NOTE

When adding fuel to only one wing, the wing being fueled should be filled to the same level as the other wing.

6. Remove the fuel service nozzle then install the fuel cap.

7. Move the fire extinguisher, protective mat, and fuel service nozzle to the remaining wing to be filled.
8. Place the protective mat on the wing and around the fuel tank filler port.
9. Remove the fuel cap then fill the wing to the desired level.
10. Remove the fuel service nozzle then install the fuel cap.
11. Remove the protective mat from the fueling area.
12. Disconnect the grounding cable from the nose gear tow bracket and the fuel service nozzle.
13. Return the fire extinguisher to its storage area.

8.7.3 LANDING GEAR

8.7.3.1 TIRE INFLATION

Inflation and servicing of the tires using nitrogen is recommended.

1. Nose Wheel Tire: 65 to 70 psi (448.2 to 482.63 kPa)
2. Main Gear Tire: 103 to 108 psi (710.16 to 744.6 kPa)

NOTE

Consider load factor and ambient temperature when checking tire pressure. Air pressure in the tire will increase when the tire is subjected to loads and when temperature increases.

8.7.3.2 HYDRAULIC FLUID AND NITROGEN SERVICING

Refer to the latest revision of the Epic E1000 Maintenance Manual, p/n SK05000000.

8.7.3.3 BRAKE FLUID

1. Remove the upper engine cowling.
2. Remove any dirt, grime, or contamination from the reservoir before removing the cap.
3. Remove the cap then add brake fluid (type MIL-PRF-83282 or MIL-PRF-87257) as required. Add fluid to the reservoir if it is less than 3/4 full.
4. Install the filler cap.
5. Install the engine cowling.

8.7.4 OXYGEN SYSTEM

Safety Guidelines for Servicing the Oxygen System

The greatest potential hazard is fire and explosion when servicing and maintaining oxygen equipment. If conditions are favorable, gaseous oxygen will cause oil, grease, and other combustibles to burn or explode. Materials that do not normally burn in air will burn in an oxygen rich atmosphere. Refer to FAA Advisory Circular 43.13-1B/1 or subsequent version and to the latest revision of the Epic E1000 Maintenance Manual, p/n SK05000000.

Tool and Equipment Cleanliness - Oxygen servicing tools and equipment must be kept clean using anhydrous ethyl alcohol, isopropyl alcohol, or other suitable oxygen safe cleaning agent. Protect cleaned

equipment and tools using caps, plugs, or covers and store them in a clean storage area.

Personnel Cleanliness - Personnel must be clean and free of lotions or lip balm. All clothing must be clean and free of hydraulic fluid, oil, fuel, grease, or other combustible material. Hands and face should be thoroughly washed before handling any oxygen equipment or servicing tools.

Electrical Power - Disconnect all electrical power from the airplane. Do not connect or disconnect the ground power supply during oxygen servicing. When charging the oxygen system, do not operate any electrical switches unless absolutely necessary.

Grounding - Ensure the airplane, oxygen system, and servicing equipment are grounded before connecting to the oxygen fill port.

Ignition Sources - Smoking near the airplane is prohibited during oxygen servicing. Avoid making sparks.

Fueling - Do not service or do maintenance on the oxygen system while the airplane is being fueled or serviced with other flammable substances.

Oxygen System Charging - Charge the oxygen system slowly. Rapid charging can generate heat.

Oxygen System Pressure - Do not over-pressurize the oxygen system.

WARNING

USE ONLY AVIATION OXYGEN TYPE MIL-O-27210 OR MIL-PRF-27210J. DO NOT USE MEDICAL OR WELDING OXYGEN. ANY OXYGEN OTHER THAN AVIATION OXYGEN MAY CONTAIN MOISTURE WHICH CAN COLLECT AND FREEZE RENDERING THE OXYGEN SYSTEM INOPERATIVE.

8.7.4.1 OXYGEN REPLENISHMENT

1. BATT 1 and BATT 2 Switches ON.
2. OXYGEN BOTTLE Switch OFF.
3. BATT 1 and BATT 2 Switches OFF.
4. Remove the oxygen fill port protective cap. The oxygen fill port is located inside the cabin to the lower right side of the cabin door and in the forward face of the air conditioner evaporator enclosure below the aft passenger seats.

WARNING

ENSURE THE FILLER NECK IS CLEAN BEFORE ATTACHING THE SERVICE HOSE. WASH YOUR HANDS BEFORE SERVICING THE OXYGEN SYSTEM. FILL THE AIRPLANE OXYGEN TANK SLOWLY TO PREVENT EXCESSIVE HEAT BUILDUP.

5. Connect the oxygen service line to the fill port.
6. Slowly fill the oxygen cylinder.
7. Shut off the oxygen supply to the airplane when the service gauge indicates 1850 psi at 70°F (21°C).

NOTE

The gauge at the fill port is for information only. Use the oxygen indication on the Garmin avionics system for accurate pressure indication.

8. Allow the oxygen cylinder temperature to stabilize then verify the oxygen quantity gauge is indicating in the normal operating range.
9. Disconnect the oxygen service line.
10. Install the fill port protective cap.

8.7.4.2 PASSENGER MASK REPACKING

Refer to the latest revision of the Epic E1000 Maintenance Manual, p/n SK05000000 for passenger mask repacking procedures.

8.8 GROUND POWER

When the airplane is on the ground the DC electrical system can be supplied with electricity by a ground power unit (GPU) which is connected under the cowling on the left side of the airplane.

CAUTION

THE GPU MUST BE CAPABLE OF PROVIDING A MINIMUM OF 200 AMPS FOR ALL SYSTEMS TO BE OPERATED CONTINUOUSLY AND 1,000 AMPS IF ENGINE STARTER OPERATION IS REQUIRED.

Use the following connection and disconnection sequence to prevent tripping of breakers in the cockpit.

8.8.1 CONNECTION

1. All cockpit switches.....OFF
2. GPU Plug.....CONNECT
3. GPU ..... ON
4. BATT 1 Switch..... ON
5. BATT 2 Switch.....ON (optional)
6. AIR COND Switch .....ON (if air conditioning is desired)

8.8.2 DISCONNECTION

1. AIR COND Switch .....OFF
2. BATT 2 Switch..... OFF (if on)
3. BATT 1 Switch.....OFF
4. GPU .....OFF
5. GPU Plug.....DISCONNECT

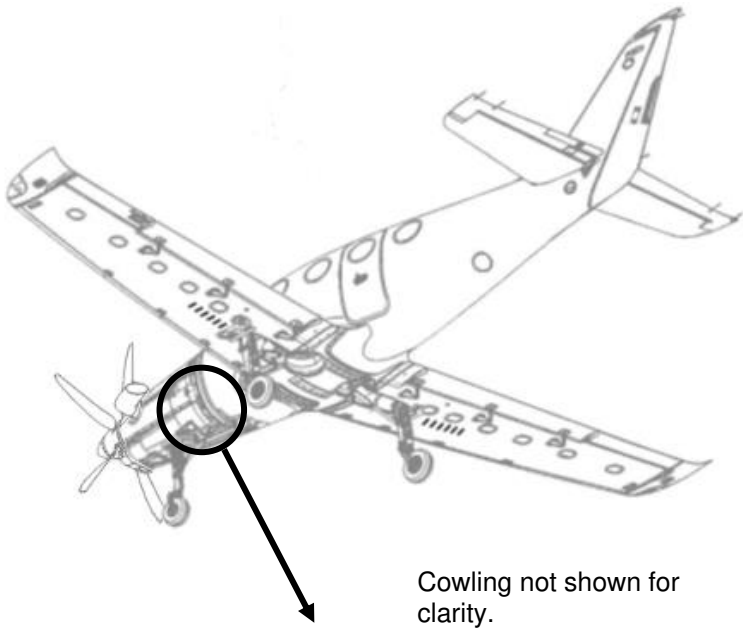

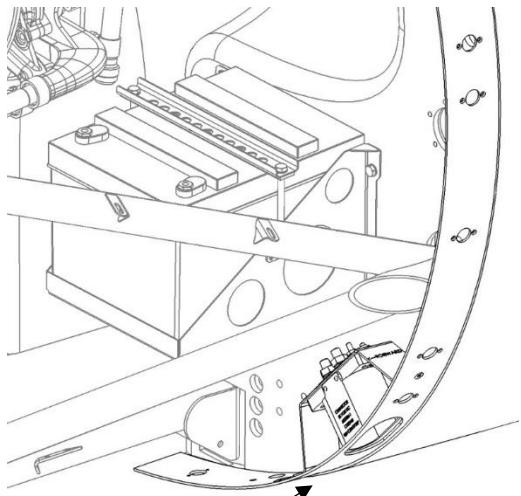

This Page Intentionally Left Blank

SECTION 9

SUPPLEMENTS

TABLE OF CONTENTS

9.1 GENERAL 3

This Page Intentionally Left Blank

9.1 GENERAL

This section of the handbook contains FAA approved supplements for optional equipment not provided with the standard airplane. Information, data, and procedures in a supplement adds to, supersedes, or replaces similar data in the basic handbook.

A Log of Supplements page immediately follows this page and precedes all Epic Aircraft, LLC supplements for this airplane.

Should the airplane be modified at a non Epic Aircraft, LLC facility through an STC or other approval method, it is the owner's responsibility to ensure the proper supplement is installed in the Handbook and that the supplement is properly recorded on the "Log of Supplements" page.

FAA approved AFM/POH supplements must be available to the pilot in flight when the subject optional equipment is installed, or the special operations are to be performed.

This Page Intentionally Left Blank