PILOT'S OPERATING HANDBOOK
AND
FAA APPROVED
AIRPLANE FLIGHT MANUAL



EPIC

E1000 AX

(SN: K086 and On with SB-0070)

Serial Number_____

Registration Number_____

Type Certificate No. A00059SE

This airplane is approved in the Utility Category based on 14 CFR part 23. This document must be carried in the airplane at all times and be kept within reach of the pilot during all flight operations.

THIS HANDBOOK INCLUDES THE MATERIAL REQUIRED TO BE FURNISHED TO THE PILOT BY THE FEDERAL AVIATION REGULATIONS AND ADDITIONAL INFORMATION PROVIDED BY THE MANUFACTURER AND CONSTITUTES THE FAA APPROVED AIRPLANE FLIGHT MANUAL.

This AFM has been prepared using GAMA Specification #1 for Pilot's Operating Handbook, Revision 2, dated 18 October 1996.

Epic Aircraft, LLC
22590 Nelson Road
Bend Municipal Airport
Bend, Oregon 97701
Phone: (541) 318-8849
Fax: (541) 382-5125

MICHAEL ALLEN MAGERS Digitally signed by MICHAEL ALLEN MAGERS Date: 2026.09.08 13:58:30 -07'00'

Flight Test Engineer, AIR-713 *for* Manager, Flight Test & Human Factors Branch, AIR-710
Federal Aviation Administration

08 September 2026
Approved Date

COPYRIGHT 2025
EPIC AIRCRAFT LLC
BEND, OREGON, USA

P/N SK05003001

This Page Intentionally Left Blank

LOG OF REVISIONS

Revision Level	Approval Date	Approved By
Original Issue	18 Jul 2025	Douglas Schmidt, FTP, AIR-713
Revision A	08 Sep 2026	Michael Magers, FTE, AIR-713

NOTE: Supplements are issued individually and are controlled by the Log of Supplements page in Section 9.

LIST OF EFFECTIVE PAGES

Use this list to determine the current revision for each page in the AFM.

Page	Revision
LOEP-1	Revision A
LOEP-2	Revision A
LOEP-3	Revision A
LOEP-4	Revision A
0-1	Original Issue
0-2	Original Issue
1-1	Revision A
1-2	Original Issue
1-3	Original Issue
1-4	Original Issue
1-5	Original Issue
1-6	Original Issue
1-7	Original Issue
1-8	Original Issue
1-9	Original Issue
1-10	Original Issue
1-11	Revision A
1-12	Original Issue
1-13	Original Issue
1-14	Original Issue
1-15	Revision A
1-16	Original Issue
1-17	Revision A
1-18	Revision A
1-19	Revision A
1-20	Revision A
1-21	Revision A
1-22	Revision A
1-23	Original Issue
1-24	Revision A
1-25	Original Issue
1-26	Original Issue
1-27	Original Issue
1-28	Original Issue
1-29	Original Issue
1-30	Original Issue
1-31	Original Issue
1-32	Original Issue
1-33	Revision A
1-34	Original Issue
2-1	Original Issue
2-2	Original Issue
2-3	Revision A
2-4	Original Issue
2-5	Revision A
2-6	Original Issue
2-7	Original Issue
2-8	Original Issue
2-9	Revision A
2-10	Revision A
2-11	Revision A
2-12	Original Issue
2-13	Original Issue
2-14	Original Issue
2-15	Original Issue
2-16	Original Issue
2-17	Original Issue
2-18	Revision A
2-19	Original Issue
2-20	Original Issue
2-21	Original Issue
2-22	Original Issue
2-23	Original Issue
2-24	Original Issue
2-25	Original Issue
2-26	Original Issue
2-27	Original Issue
2-28	Original Issue
2-29	Original Issue
2-30	Original Issue
2-31	Original Issue
2-32	Original Issue
2-33	Revision A
2-34	Original Issue
3-1	Original Issue
3-2	Original Issue
3-3	Original Issue
3-4	Original Issue
3-5	Original Issue
3-6	Original Issue
3-7	Original Issue
3-8	Original Issue
3-9	Original Issue
3-10	Revision A
3-11	Revision A
3-12	Revision A
3-13	Original Issue
3-14	Original Issue
3-15	Original Issue
3-16	Revision A
3-17	Original Issue
3-18	Original Issue
3-19	Revision A
3-20	Revision A
3-21	Revision A
3-22	Original Issue
3-23	Original Issue
3-24	Original Issue
3-25	Original Issue
3-26	Original Issue
3-27	Original Issue
3-28	Original Issue
3-29	Original Issue
3-30	Original Issue
3-31	Original Issue
3-32	Revision A
3-33	Original Issue
3-34	Original Issue
3-35	Original Issue
3-36	Original Issue
3-37	Original Issue
3-38	Original Issue
3-39	Revision A
3-40	Original Issue
3-41	Original Issue
3-42	Original Issue
3-43	Revision A

Page	Revision
3-44	Revision A
3-45	Original Issue
3-46	Original Issue
3-47	Original Issue
3-48	Revision A
3-49	Original Issue
3-50	Original Issue
3-51	Original Issue
3-52	Original Issue
3-53	Original Issue
3-54	Original Issue
3A-1	Original Issue
3A-2	Revision A
3A-3	Revision A
3A-4	Original Issue
3A-5	Original Issue
3A-6	Original Issue
3A-7	Original Issue
3A-8	Original Issue
3A-9	Original Issue
3A-10	Original Issue
3A-11	Original Issue
3A-12	Original Issue
3A-13	Original Issue
3A-14	Revision A
3A-15	Original Issue
3A-16	Revision A
3A-17	Original Issue
3A-18	Revision A
3A-19	Original Issue
3A-20	Original Issue
3A-21	Revision A
3A-22	Original Issue
3A-23	Original Issue
3A-24	Original Issue
3A-25	Original Issue
3A-26	Revision A
3A-27	Original Issue
3A-28	Original Issue
3A-29	Original Issue
3A-30	Original Issue
3A-31	Original Issue
3A-32	Revision A
3A-33	Original Issue
3A-34	Original Issue
3A-35	Original Issue
3A-36	Original Issue
4-1	Original Issue
4-2	Revision A
4-3	Original Issue
4-4	Original Issue
4-5	Revision A
4-6	Revision A
4-7	Original Issue
4-8	Original Issue
4-9	Original Issue
4-10	Original Issue
4-11	Revision A
4-12	Original Issue
4-13	Revision A
4-14	Original Issue
4-15	Original Issue
4-16	Original Issue
4-17	Revision A
4-18	Original Issue
4-19	Original Issue
4-20	Original Issue
4-21	Original Issue
4-22	Original Issue
4-23	Original Issue
4-24	Original Issue
4-25	Revision A
4-26	Original Issue
4-27	Original Issue
4-28	Revision A
4-29	Original Issue
4-30	Original Issue
4-31	Revision A
4-32	Revision A
4-33	Revision A
4-34	Revision A
5-1	Original Issue
5-2	Original Issue
5-3	Original Issue
5-4	Original Issue
5-5	Original Issue
5-6	Original Issue
5-7	Original Issue
5-8	Original Issue
5-9	Original Issue
5-10	Original Issue
5-11	Original Issue
5-12	Original Issue
5-13	Revision A
5-14	Original Issue
5-15	Original Issue
5-16	Original Issue
5-17	Original Issue
5-18	Original Issue
5-19	Original Issue
5-20	Original Issue
5-21	Original Issue
5-22	Original Issue
5-23	Original Issue
5-24	Original Issue
5-25	Original Issue
5-26	Original Issue
5-27	Original Issue
5-28	Original Issue
5-29	Original Issue
5-30	Original Issue
5-31	Original Issue
5-32	Original Issue
5-33	Original Issue
5-34	Original Issue
5-35	Original Issue
5-36	Original Issue
5-37	Original Issue
5-38	Original Issue
5-39	Original Issue
5-40	Original Issue
5-41	Original Issue
5-42	Original Issue

Page	Revision
5-43	Original Issue
5-44	Original Issue
6-1	Original Issue
6-2	Original Issue
6-3	Original Issue
6-4	Original Issue
6-5	Original Issue
6-6	Original Issue
6-7	Original Issue
6-8	Original Issue
7-1	Revision A
7-2	Original Issue
7-3	Original Issue
7-4	Original Issue
7-5	Original Issue
7-6	Original Issue
7-7	Original Issue
7-8	Original Issue
7-9	Original Issue
7-10	Original Issue
7-11	Original Issue
7-12	Original Issue
7-13	Original Issue
7-14	Original Issue
7-15	Original Issue
7-16	Original Issue
7-17	Original Issue
7-18	Original Issue
7-19	Original Issue
7-20	Revision A
7-21	Original Issue
7-22	Original Issue
7-23	Revision A
7-24	Revision A
7-25	Revision A
7-26	Revision A
7-27	Revision A
7-28	Revision A
7-29	Revision A
7-30	Revision A
7-31	Revision A
7-32	Revision A
7-33	Revision A
7-34	Revision A
7-35	Revision A
7-36	Revision A
7-37	Revision A
7-38	Revision A
7-39	Revision A
7-40	Revision A
7-41	Revision A
7-42	Revision A
7-43	Revision A
7-44	Revision A
7-45	Revision A
7-46	Revision A
7-47	Revision A
7-48	Revision A
7-49	Revision A
7-50	Revision A
7-51	Revision A
7-52	Revision A
7-53	Revision A
7-54	Revision A
7-55	Revision A
7-56	Revision A
7-57	Revision A
7-58	Revision A
7-59	Revision A
7-60	Revision A
7-61	Revision A
7-62	Revision A
7-63	Revision A
7-64	Revision A
7-65	Revision A
7-66	Revision A
7-67	Revision A
7-68	Revision A
7-69	Revision A
7-70	Revision A
7-71	Revision A
7-72	Revision A
7-73	Revision A
7-74	Revision A
7-75	Revision A
7-76	Revision A
7-77	Revision A
7-78	Revision A
7-79	Revision A
7-80	Revision A
7-81	Revision A
7-82	Revision A
7-83	Revision A
7-84	Revision A
7-85	Revision A
7-86	Revision A
7-87	Revision A
7-88	Revision A
7-89	Revision A
7-90	Revision A
7-91	Revision A
7-92	Revision A
7-93	Revision A
7-94	Revision A
8-1	Revision A
8-2	Original Issue
8-3	Original Issue
8-4	Original Issue
8-5	Original Issue
8-6	Original Issue
8-7	Original Issue
8-8	Revision A
8-9	Original Issue
8-10	Original Issue
8-11	Revision A
8-12	Revision A
9-1	Original Issue
9-2	Original Issue
9-3	Original Issue
9-4	Original Issue

SECTION 1

GENERAL

TABLE OF CONTENTS

1.1 GENERAL 3
1.1.1 REVISIONS 3
1.1.2 SUPPLEMENTS 4
1.1.3 WARNING, CAUTION, AND NOTE 5
1.2 AIRPLANE THREE VIEW 6
1.3 INTERIOR DIMENSIONS 8
1.4 TURNING RADIUS 9
1.5 DESCRIPTIVE DATA 10
1.5.1 ENGINE 10
1.5.2 PROPELLER 10
1.5.3 FUEL 10
1.5.4 ENGINE OIL 11
1.5.5 MAXIMUM CERTIFICATED WEIGHTS 11
1.5.6 STANDARD AIRPLANE WEIGHTS 11
1.5.7 CABIN, ENTRY, AND EXIT DIMENSIONS 11
1.5.8 SPECIFIC LOADINGS 11
1.5.9 NAVIGATION APPROVALS 12
1.5.10 ADS-B 17
1.5.11 RVSM 18
1.5.12 FLIGHT INTO KNOWN ICING (FIKI) 18
1.6 ABBREVIATIONS AND TERMINOLOGY 19
1.6.1 METEOROLOGICAL TERMINOLOGY 19
1.6.2 POWER TERMINOLOGY 19
1.6.3 PERFORMANCE AND FLIGHT PLANNING TERMINOLOGY 20
1.6.4 AIRSPEED TERMINOLOGY 21
1.6.5 WEIGHT AND BALANCE TERMINOLOGY 22
1.6.6 AVIONICS TERMINOLOGY 23
1.6.7 ICING TERMINOLOGY 25

1.7 CONVERSION TABLES AND GRAPHS 26
1.7.1 CONVERSION FACTORS 26
1.7.2 INCHES VERSUS MILLIMETERS CONVERSION GRAPH 27
1.7.3 FEET VERSUS METERS CONVERSION GRAPH 28
1.7.4 POUNDS VERSUS KILOGRAMS CONVERSION CHART 29
1.7.5 LITERS TO IMPERIAL GALLONS CONVERSION GRAPH 30
1.7.6 LITERS TO US GALLONS CONVERSION GRAPH 31
1.7.7 US GALLONS TO IMPERIAL GALLONS CONVERSION GRAPH 32
1.7.8 HECTOPASCAL TO INCHES OF MERCURY CONVERSION 33
1.7.9 CELSIUS TO FAHRENHEIT CONVERSION GRAPH 34

Anti-Icing Additive:

Anti-icing additive conforming to MIL-DTL-27686 or MIL-DTL-85470.

Anti-icing additives must be in compliance with the latest revision of Pratt & Whitney Service Bulletin 14004.

1.5.4 ENGINE OIL

Maximum System Capacity ..... 3 US gal (11.35 L)
Usable Capacity ..... 2.5 US gal (9.4 L)
Oil Grade or Specification:

Any oil conforming to MIL-PRF-23699G, Type II (5cSt) and as specified in the latest revision of Pratt and Whitney Service Bulletin 14001.

Refer to Section 8 for a list of approved engine oils current as of the time of publication.

1.5.5 MAXIMUM CERTIFICATED WEIGHTS

Towing Operations ..... 8,000 lb (3,629 kg)
Takeoff ..... 8,000 lb (3,629 kg)
Landing ..... 7,600 lb (3,447 kg)
Baggage Compartment ..... 200 lb (90 kg)

1.5.6 STANDARD AIRPLANE WEIGHTS

Empty Weight ..... 5,079 lb (2,304 kg)
Maximum Useful Load ..... 2,921 lb (1,325 kg)

1.5.7 CABIN, ENTRY, AND EXIT DIMENSIONS

Cabin Entry ..... 1 main
Cabin Exits ..... 1 main, 1 emergency exit
Entry Width ..... 26 in (0.7 m)
Entry Height ..... 46.5 in (1.2 m)
Maximum Cabin Width ..... 54.4 in (1.4 m)
Maximum Cabin Length ..... 167 in (4.2 m)
Maximum Cabin Height ..... 54 in (1.4 m)
Emergency Exit (1 over wing) ..... 19 in x 26 in (0.5 m x 0.7 m)

1.5.8 SPECIFIC LOADINGS

Wing loading (at 8,000 lb (3,629 kg)) 38.6 lb/ft2 (188.5 kg/m2)
Power loading (at 8,000 lb (3,629 kg) with T/O ESHP): ..... 6.3 lb/ESHP

1.5.9 NAVIGATION APPROVALS

The GFC 700 autopilot is approved for Category 1 precision approaches, approaches with vertical guidance, and non-precision approaches.

The G1000 NXi installed in this airplane is a GNSS (Global Navigation Satellite System) with a Satellite Based Augmentation System (SBAS) comprised of navigation sensors that meet the standards set forth in TSOC145a/ETSO-C145 (Sensors) and TSO-C146a/ETSO-C146 (Display Units) for Class 3 systems. The G1000 GNSS navigation system in this airplane is installed in accordance with AC 20-138D. When all equipment is operative, the Garmin G1000 NXi system provides two independent GNSS navigation systems. Failure of any of the above equipment or the posting of 'BOTH ON GPS1' or 'BOTH ON GPS2' annunciators indicate only one operational GNSS system.

NOTE

A "BOTH ON GPS1" or "BOTH ON GPS2" message does not necessarily mean that one GPS has failed. Refer to the MFD - GPS STATUS page to determine the state of the unused GPS.

NOTE

If "BOTH ON GPS1" or "BOTH ON GPS2" message is displayed, the system does not meet the requirements for airspace that requires dual GNSS navigation systems.

The G1000 NXi as installed in this airplane complies with the requirements of AC 20-138D and is approved for navigation using GNSS and GNSS/SBAS (within the coverage of a Satellite Based Augmentation System complying with ICAO Annex 10) for IFR enroute, terminal area, approach procedures with vertical guidance, and non-precision approach operations. The term GNSS (Global Navigation Satellite System) includes the U.S GPS as well as comparable systems operated by other countries. The term SBAS (Satellite Based Augmentation System) refers to systems such as the U.S. WAAS (Wide Area Augmentation System) as well as other satellite-based augmentation systems operated by other countries.

The G1000 NXi as installed in this airplane complies with the equipment, performance, and functional requirements and is approved to conduct RNAV and RNP operations in accordance with the applicable requirements of the reference documents listed in the following table. This table is accurate at the time it was published. However, changes to operational rules, FAA advisory circulars, etc., are possible. The pilot is responsible to ensure compliance with current operational requirements.

Navigation Specification	Aircraft Specific Requirements
RNP-2	Domestic, Offshore, Oceanic, and Remote Continental Operations, in accordance with AC90-105A, navigation equipage for RNP 2 operations must require dual independent GPS LRNS where higher continuity is specified. Navigation equipage for all RNP 2 domestic and offshore operations areas must have at least a single GPS LRNS. An FDE function must be available when conducting RNP 2 oceanic or remote continental operations.[1] This does not constitute an operational approval.
RNAV-2 RNAV-1 (US RNAV Types A & B)	U.S. Area Navigation (RNAV) routes, Departure Procedures (DPs), and Standard Terminal Arrivals (STARs) in accordance with the applicable criteria of AC 90-100A. This includes Q-Routes and T-Routes within the contiguous United States and RNAV 1 or RNAV 2 instrument departure procedures and STARS provided that: a. The GNSS navigation system is receiving usable signals from the GNSS sensor. b. The following messages are not displayed: • DEAD RECKONING Mode (DR) • INTEG (amber INT on PFD) c. SBAS coverage is verified to be available along the entire route of flight. Outside of SBAS coverage or if SBAS is not available, an approved FDE prediction program must be used prior to flight to verify adequate RAIM availability.[1] NOTE: This capability does not apply to over water RNAV routes (including the Q-routes in the Gulf of Mexico or Atlantic routes) or to Alaska VOR/DME RNAV routes (“JxxxR”). This does not constitute an operational approval.

Navigation Specification	Aircraft Specific Requirements
Advanced RNP	Advanced RNP (A-RNP) in accordance with AC 20-138D. RNAV Holding is supported. RF Legs up to a maximum indicated airspeed of 180 knots are supported. Parallel Offsets are supported. Higher Continuity is supported when both GIA 64 GPS/SBAS receivers are operating and providing GPS navigation guidance to their respective PFD. Scalable RNP, Fixed Radius Transitions (FRT), and Time of Arrival Control (TOAC) are not supported. This does not constitute an operational approval.

NOTE 1: FDE/RAIM availability can be determined using:

Prediction Program	Internet Address or Program Details	Coverage Area
Garmin RAIM Prediction Tool	https://fly.garmin.com/fly-garmin/support/raim/	Worldwide
Garmin WFDE Prediction Program	Garmin WFDE Prediction program, part number 006-A0154-01 (010-G1000-00) or later approved version with Garmin GA36 and GA37 antennas selected.	Worldwide
FAA Service Availability Prediction Tool	https://sapt.faa.gov	US only
Flight Service Station	1-800-WXBRIEF https://www.1800wxbrief.com	US only
AUGER GPS RAIM Prediction Tool	https://augur.eurocontrol.int/tool/	ECAC airspace only
Any other FDE/RAIM prediction program authorized by the appropriate governing authority.		

Garmin International holds an FAA Type 2 Letter of Acceptance (LOA) in accordance with AC 20-153A for database integrity, quality, and database management practices for the Navigation database. Flight crew and operators can view the LOA status at https://fly.garmin.com then select “Type 2 LOA Status.” Navigation information is referenced to the WGS-84 reference system.

Jeppesen ForeFlight, Inc (previously Boeing Digital Aviation Solutions) holds an FAA Type 2 Letter of Acceptance (LOA) in accordance with AC 20-153A for database integrity, quality, and database management practices for the Navigation database. Flight crew and operators can view the LOA status at https://jeppesen.com/certifications-and-letters-of-acceptance. Navigation information is referenced to the WGS-84 reference system.

Note that for some types of aircraft operation and for operation in non-U.S. airspace, separate operational approval(s) may be required in addition to equipment installation and airworthiness approval.

1.5.10 ADS-B

The G1000 NXi incorporates dual Mode S extended squitter transponders to provide ADS-B Out capability. The system transmits ADS-B Out information on 1090 MHz. This installation complies with the requirements of AC 20-165B (ADS-B Out) and has been shown to meet the equipment requirements of 14 CFR §91.227 when all required functions and components are operational.

The G1000 NXi incorporates the Garmin GTS 825 Traffic Advisory System or optional GTS 850/855 Traffic Alert and Collision System to provide ADS-B In traffic capability.

The G1000 NXi incorporates the Garmin GTX 345 DR Transponder to provide ADS-B In traffic and weather capability.

The installed G1000 NXi software, version B5204-00 or later, meets the criteria of AC 20-172B and ED-233 for Crew Assisted Visual Separation (CAVS) airworthiness and is eligible to conduct CAVS operations using ADS-B In (14 CFR part 119, § 119.49(a)(5)); However, operational approval may have to be obtained from the Civil Aviation Authority (CAA) in the country where the operations take place.

The Runway Occupancy Awareness (ROA) function enhances ADS-B In traffic awareness by providing indications and caution alerts of potential runway conflicts with other suitably equipped aircraft. ROA is available when ADS-B In is enabled and the aircraft is operating on or near eligible hard-surface runways supported by the system databases. The function uses ADS-B traffic information together with runway and airport database information to identify potential high-speed runway conflicts during takeoff, landing, and runway crossing operations. ROA does not provide alerts for all airports, runways, or aircraft, and alerting depends on the availability and quality of ADS-B traffic data.

1.5.11 RVSM

The type design, reliability, and performance of this airplane model/ engine combination has been evaluated in accordance with FAA Advisory Circular 91-85B, "Authorization of Aircraft and Operators for Flight in Reduced Vertical Separation Minimum (RVSM) Airspace", 29 January 2019, and is qualified for operations in RVSM airspace.

NOTE

Airworthiness Approval alone does not authorize flight into airspace for which RVSM Operation Approval is required. Operation Approval must be obtained in accordance with the appropriate governing authority.

1.5.12 FLIGHT INTO KNOWN ICING (FIKI)

Flight into known icing conditions is authorized when all airplane equipment required for ice protection and ice detection is operating correctly and is activated at the first sign of icing.

Icing conditions can exist when:

- The outside air temperature (OAT) is 5°C or colder, and visible moisture in any form such as clouds, fog or mist, rain, snow, sleet and ice crystals is present.
- During ground operations when operating on contaminated ramps, taxiways or runways where surface snow, ice, standing water or slush are present.
- There are visible signs of ice accretion on the aircraft.

The E1000 ice protection system was designed and tested for operation in light to moderate meteorological conditions defined in 14 CFR 25, Appendix C, and for continuous maximum and intermittent maximum icing conditions. The ice protection system was not designed or tested for flight in freezing rain, freezing drizzle or supercooled large drops and ice crystals, or icing conditions defined as severe. Flight in these conditions must be avoided.

The ice protection system was not designed to remove ice, snow, or frost accumulations from a parked airplane. Ice, snow, or frost must be completely removed during preflight to ensure a safe takeoff and subsequent flight.

Procedures for ice, snow, or frost removal, such as storing the aircraft in a heated hangar, must be used to ensure that ALL ice, snow, or frost is completely removed from the wings, tail, control surfaces, windshield, propeller, engine intakes, fuel vents, pitot tubes, and static ports, prior to flight.

Some icing conditions not defined in 14 CFR Part 25, Appendix C have the potential of producing hazardous ice accumulations, which may exceed the capabilities of the airplane's ice protection equipment. See Section 4.5.4 OPERATIONS IN SEVERE ICING CONDITIONS.

An advisory ice detector is installed to assist the pilot in early detection of icing conditions. OAT and visible moisture remain the primary methods for the pilot to determine icing conditions. Visual verification that flight surfaces are clear of ice is the primary method for determining when to turn ice protection equipment off.

Descriptions of ice protection and ice detection systems are included in Section 7.

1.6 ABBREVIATIONS AND TERMINOLOGY

1.6.1 METEOROLOGICAL TERMINOLOGY

IMC	Instrument Meteorological Conditions, expressed in terms of visibility, distance from cloud, and ceiling less than the minima specified for visual meteorological conditions.
ISA	International Standard Atmosphere (standard day) is an atmosphere where 1. The air is a dry perfect gas. 2. The temperature at sea level is 15°C (59°F). 3. The pressure at sea level is 29.92 inHg (1,013.2 mb).
MSL	Mean Sea Level is the average height of the sea for all stages of tide. In this AFM, altitude given as MSL is the altitude above the mean sea level. It is the altitude read from the altimeter when the altimeter's barometric adjustment has been set to the altimeter setting obtained from ground meteorological sources.
OAT	Outside Air Temperature is the free air or static temperature obtained from in-flight temperature indications or from ground meteorological sources. It is expressed in either °C or °F.
PA	Pressure Altitude is the altitude indicated by an altimeter when the altimeter's barometric scale has been set to 29.92 inHg (1,013.2 mb).
Standard Temperature	Standard Temperature is the temperature that would be found at a given pressure altitude in the standard atmosphere. It is 15°C (59°F) at sea level pressure altitude and decreases by 2°C (3.6°F) for each 1,000 ft. of altitude increase.

1.6.2 POWER TERMINOLOGY

Beta	Beta is the range of power lever positions that allow for setting the propeller blades at a flat or reverse pitch angle.
ESHP	Equivalent Shaft Horsepower is the combined power output by the propeller shaft and the jet thrust generated by the exhaust.
Feathering	Feathering is the action which reduces the drag of a propeller by positioning blades at the pitch angle allowing minimal drag.
GPU	Ground Power Unit

Ground Fine	Condition where the propeller is in flat pitch but not producing reverse thrust.
ITT	Inter-Turbine Temperature
MCP	Maximum Continuous Power is the maximum power that can be used continuously.
MOR	Manual Override
N_G	Gas generator rotation speed.
N_P	Propeller rotation speed.
Reverse Thrust	Reverse thrust is the rearward thrust produced when the propeller blade pitch angle is negative.
RPM	Revolutions Per Minute
SHP	Shaft Horsepower is the power output by the propeller shaft.
Takeoff Power	Takeoff Power is the maximum power that can be used during takeoff.
TRQ	Torque

1.6.3 PERFORMANCE AND FLIGHT PLANNING TERMINOLOGY

Climb Gradient	Climb gradient is the ratio of the change in height to the horizontal distance traversed during a portion of a climb.
Demonstrated Crosswind Velocity	Demonstrated crosswind velocity is the velocity of the crosswind component for which adequate control of the airplane during taxi, takeoff, and landing was demonstrated during certification testing. Demonstrated crosswind is not considered to be limiting.
g	One "g" is a quantity of acceleration equal to that of Earth's gravity.
GPH	Gallons Per Hour is the amount of fuel (in gallons) consumed by the airplane in an hour.
Pusher Ice Mode	A setting of the Stall Prevention System. This mode adjusts the set points in the stall prevention system (stick shaker and stick pusher) to account for use of icing equipment. The critical angle of attack for stick shaker and stick pusher activation are decreased in this mode. Minimum airspeeds for stick shaker and stick pusher activation are increased in this mode. This mode is activated in flight above FL180, and when either the de-ice boots or prop heat are turned on.
Unusable Fuel	Unusable fuel is the amount of fuel remaining in the airplane fuel tanks due to the geometry of the fuel tanks and lines that cannot safely be used in flight.
Usable Fuel	Usable fuel is the fuel available for flight planning.

1.6.4 AIRSPEED TERMINOLOGY

KCAS	Knots Calibrated Airspeed - The indicated airspeed expressed in knots corrected for position and instrument error. Knots calibrated airspeed is equal to KTAS in standard atmosphere at sea level.
KIAS	Knots Indicated Airspeed - The speed shown on the airspeed indicator and expressed in knots.
KTAS	Knots True Airspeed - The airspeed expressed in knots relative to undisturbed air which is KCAS corrected for altitude and temperature.
M_{MO}	Maximum Mach Operating Speed - The maximum Mach that may not be deliberately exceeded in normal flight operations.
V_{FE}	Maximum Flap Extended Speed - The highest speed permissible with wing flaps in a prescribed extended position.
V_{LE}	Maximum Landing Gear Extended Speed - The maximum speed at which an airplane can be safely flown with the landing gear extended.
V_{LO}	Maximum Landing Gear Operating Speed - The maximum speed at which the landing gear can be safely extended or retracted.
V_{MO}	Maximum Operating Speed - The maximum speed that may not be deliberately exceeded in normal flight operations.
V_O	Operating Maneuvering Speed - The maximum speed at which application of full or abrupt control movement will not overstress the airplane.
V_R	Rotation Speed - The speed at which the pilot makes a control input with the intention of lifting the airplane out of contact with the runway.
V_{S0}	Stalling Speed - The minimum steady flight speed at which the airplane is controllable in the landing configuration.
V_{S1}	Stalling Speed - The minimum steady flight speed obtained in a specific configuration.
V_X	Best Angle of Climb Speed - The airspeed which delivers the greatest gain in altitude per unit of horizontal distance.
V_Y	Best Rate of Climb Speed - The airspeed which delivers the greatest gain in altitude per unit of time.

1.6.5 WEIGHT AND BALANCE TERMINOLOGY

Arm	Arm is the horizontal distance from the reference datum to the center of gravity (CG) of an item. The airplane's arm is obtained by adding the airplane's individual moments and dividing the sum by the total weight.
Basic Empty Weight	Basic Empty Weight is the actual weight of the airplane including all operating equipment that has a fixed location in the airplane. The basic empty weight includes the weight of unusable fuel and full oil.
CG	Center of Gravity is the point at which the airplane will balance if suspended. Its distance from the reference datum is found by dividing the total moment by the total weight of the airplane.
Fuselage Station	Fuselage Station (FS) is a location along the airplane fuselage measured in inches from the reference datum and expressed as a number. For example, a point 123 inches aft of the reference datum is FS 123.
Maximum Takeoff Weight	The Maximum Takeoff Weight (MTOW) is the maximum weight approved at the start of the takeoff run.
Maximum Landing Weight	Maximum Landing Weight (MLW) is the maximum weight approved for the landing touchdown.
Maximum Towing Operations Weight	Maximum weight approved for towing the airplane.
Moment	Moment is the product of the weight of an item multiplied by its arm.
Reference Datum	Reference Datum is an imaginary vertical plane from which all horizontal distances are measured for balance purposes. Reference Datum = FS 0.0

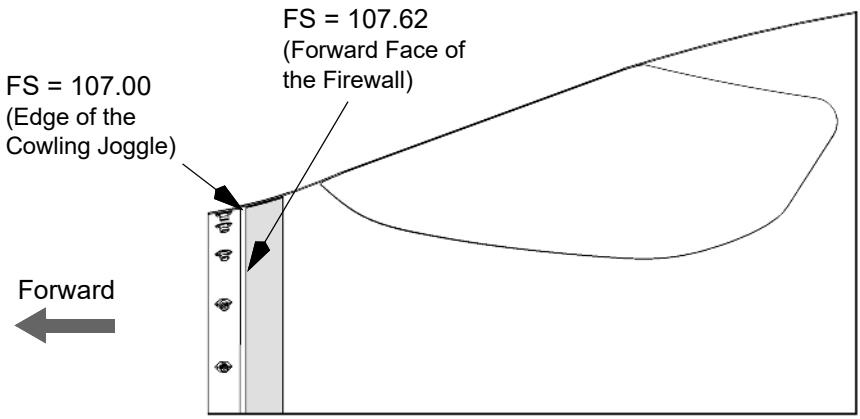

Useful Load	Useful Load is the basic empty weight subtracted from the maximum takeoff weight. It is the maximum allowable combined weight of pilot, passengers, usable fuel, and baggage.

1.6.6 AVIONICS TERMINOLOGY

ADAHRS	Air Data, Attitude, and Heading Reference System
ADF	Automatic Direction Finder
ADS-B	Automatic Dependent Surveillance - Broadcast
ADS-C	Automatic Dependent Surveillance - Contract
AET	Automatic Electric Trim
AFCS	Automatic Flight Control System
AR	Authorization Required
AT	Autothrottle
ATC	Air Traffic Control
Autopilot	Garmin GFC™ 700 Automatic Flight Control System (AFCS)
BMS	Battery Management System
CDI	Course Deviation Indicator
CPDLC	Controller Pilot Data Link Communication
CWS	Control-Wheel Steering
DME	Distance Measuring Equipment
EDM	Emergency Descent Mode
EFB	Electronic Flight Bag
EGNOS	European Geostationary Navigation Overlay Service
EIS	Engine Indicating System
EP	Engine Protection or Envelope Protection
ESP	Electronic Stability and Protection
FDE	Fault Detection and Exclusion
FMS	Flight Management System
GAGAN	GPS Aided GEO Augmented Navigation
GDU	Garmin Display Unit (PFD or MFD)
GNSS	Global Navigation Satellite System
GPS	Global Positioning System
ICAO	International Civil Aviation Organization
IFR	Instrument Flight Rules
IMC	Instrument Meteorological Conditions
LDA	Localizer Directional Aid
LFE	Landing Field Elevation
LNAV	Lateral Navigation
LNAV+V	Lateral Navigation with Advisory Vertical Guidance
LNAV/VNAV	Lateral Navigation with Vertical Navigation
LOC	Localizer
LOC-BC	Localizer Backcourse

LP	Localizer Performance
LP+V	Localizer Performance with Advisory Vertical Guidance
LPV	Localizer Performance with Vertical Guidance
MET	Manual Electric Trim
MFD	Multi-Function Display
MMC	Multi-Media Card
NOTAM	Notice to Airmen
OBS	Omnibearing Select
OSP	Overspeed Protection
PABI	Pressure Altitude Broadcast Inhibit
PBN	Performance Based Navigation
PED	Portable Electronic Device
PFD	Primary Flight Display
RAIM	Receiver Autonomous Integrity Monitoring
RF Leg	Radius-to-Fix Leg of a Charted Instrument Procedure
RNAV	Area Navigation
RNP	Required Navigational Performance
ROA	Runway Occupancy Awareness
SBAS	Satellite Based Augmentation System
SD	Secure Digital
SDF	Simplified Directional Facility
SUSP	Suspend
SVT	Synthetic Vision Technology
TAS	Traffic Awareness System
TAWS	Terrain Awareness and Warning System
TCAS	Traffic Collision Avoidance System
TCH	Threshold Crossing Height
TFR	Temporary Flight Restriction
TIS	Traffic Information System
TSO	Technical Standard Order
UAT	Universal Access Transmitter
USP	Underspeed Protection
VDI	Vertical Deviation Indicator
VFR	Visual Flight Rules
VMC	Visual Meteorological Conditions
VOR	VHF Omnidirectional Range
VRP	Visual Reporting Point
WAAS	Wide Area Augmentation System
WFDE	WAAS Fault Data Exclusion

1.7.8 HECTOPASCAL TO INCHES OF MERCURY CONVERSION

Pressure – Hectopascal (hPa) to Inches of Mercury (inHg) at 32ºF (0ºC)										
hPa		+1	+2	+3	+4	+5	+6	+7	+8	+9
930	27.46	27.49	27.52	27.55	27.58	27.61	27.64	27.27	27.7	27.73
940	27.76	27.79	27.82	27.85	27.88	27.91	27.94	27.96	27.99	28.02
950	28.05	28.08	28.11	28.14	28.17	28.20	28.23	28.26	28.29	28.32
960	28.35	28.38	28.41	28.44	28.47	28.50	28.53	28.56	28.59	28.61
970	28.64	28.67	28.70	28.73	28.76	28.79	28.82	28.85	28.88	28.91
980	28.94	28.97	29.00	29.03	29.06	29.09	29.12	29.15	29.18	29.21
990	29.23	29.26	29.29	29.32	29.35	29.38	29.41	29.44	29.47	29.50
1000	29.53	29.56	29.59	29.62	29.65	29.68	29.71	29.74	29.77	29.80
1010	29.83	29.85	29.88	29.91	29.94	29.97	30.00	30.03	30.06	30.09
1020	30.12	30.15	30.18	30.21	30.24	30.27	30.30	30.33	30.36	30.39
1030	30.42	30.45	30.47	30.50	30.53	30.56	30.59	30.62	30.65	30.68
1040	31.55	31.55	30.77	30.80	30.83	30.86	30.89	30.92	30.95	30.98
1050	31.84	31.84	31.07	31.10	31.12	31.15	31.18	31.21	31.24	31.27
1060	32.14	32.14	31.36	31.39	31.42	31.45	31.48	31.51	31.54	31.57
1070	32.43	32.44	31.66	31.69	31.72	31.74	31.77	31.80	31.83	31.86

Note: 1,013.2 hPa = 29.92 inHg

1.7.9 CELSIUS TO FAHRENHEIT CONVERSION GRAPH

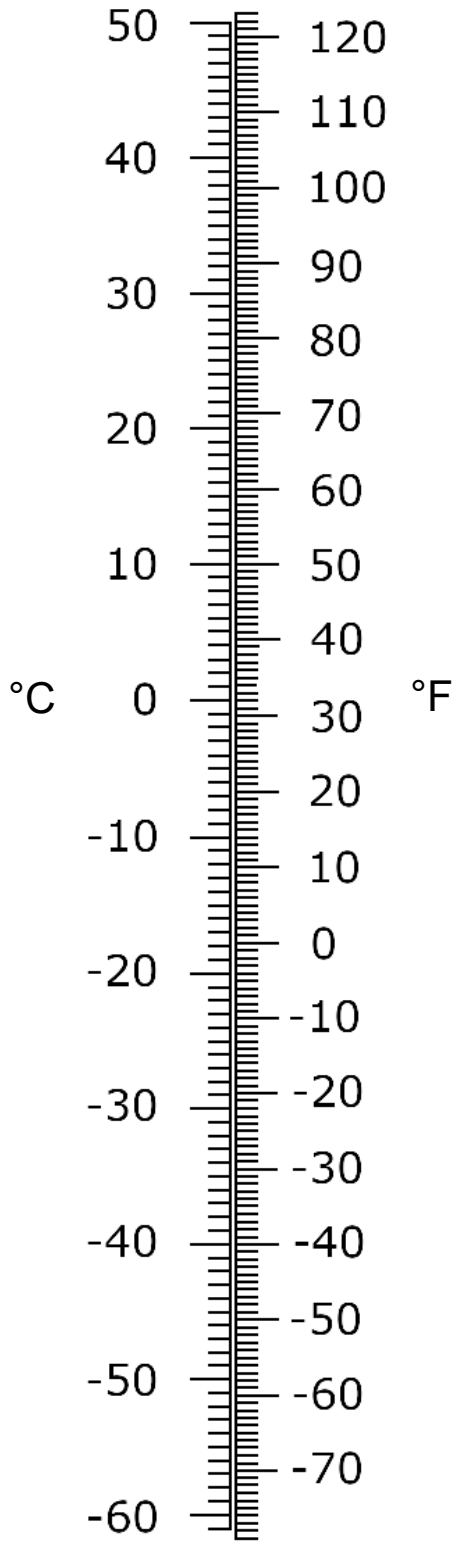

2.1 GENERAL

This Section of the airplane Pilot's Operating Handbook contains the various operating limitations, instrument markings, color coding, and basic placards necessary for the safe operation of the airplane.

The limitations included in this Section have been approved by the Federal Aviation Administration in accordance with 14 CFR Section 21.29.

This airplane must be flown in compliance with the limits specified by placards or markings and with those given in this Section and throughout the Pilot's Operating Handbook.

Refer to Section 9 SUPPLEMENTS of this handbook for the limitations for optional systems.

2.2 AIRSPEED LIMITATIONS

	Speed	KIAS	Remarks
M_{MO}	Maximum Mach operating speed	0.6 Mach	
V_{MO}	Maximum operating speed	270	
V_O	Operating maneuvering speed	170	Do not apply full or abrupt control movements above this speed.
V_{FE}	Maximum flaps extended speed: T/O FULL	 180 130	
V_{LO}	Maximum landing gear operation speed	150	Do not extend or retract the landing gear above this speed.
V_{LE}	Maximum landing gear extended speed	150	Do not exceed this speed with the landing gear extended.
	Minimum speed with autopilot engaged Flaps UP Flaps T/O Flaps FULL	 115 110 95	Do not operate below these speeds with the autopilot engaged.

2.3 POWERPLANT LIMITATIONS

2.3.1 ENGINE

OPERATING CONDITION	SHP	TORQUE % (1)	MAX ITT °C	N_G %	N_P RPM	OIL PRESS PSI (2)	OIL TEMP °C (7)(8)
STARTING	—	—	1000 (3)	—	—	200 (max)	-40 (min)
IDLE	—	—	750	51 (min)	—	60 (min)	-40 to 110
TAKEOFF (5)	1200	100	850	104	1700 (9)	90 to 135	10 to 110
MAX CONT. MAX CLIMB MAX CRUISE	1000 (6)	98	840	104	1700 (9)	90 to 135	10 to 105
MAX REVERSE	900	—	760	—	1650	90 to 135	10 to 105
TRANSIENT	—	137% (4)	870 (4)	104	1870	40 to 200 (4)	-40 to 110

NOTES:

(1) Torque limit applies within range of 1000–1700 propeller rpm (N_P). Below 1000 propeller rpm, torque is limited to 54%.

(2) Normal oil pressure is 90 to 135 psi at gas generator speeds above 72% N_G. With engine torque below 81%, minimum oil pressure is 85 psi at normal oil temperature (60 to 70 °C). Oil pressures under 90 psi are undesirable. Under emergency conditions, to complete a flight, a lower oil pressure limit of 60 psi is permissible at reduced power level not exceeding 54% torque. Oil pressures below 60 psi are unsafe and require that a landing be made at the nearest suitable airport, using the minimum power required to maintain flight.

(3) These values are time limited to 5 seconds.

(4) These values are time limited to 20 seconds.

(5) These values are time limited to 5 minutes.

(6) 83.3% torque at 1700 RPM or 88.5% torque at 1600 RPM

(7) For increased service life of engine oil, an oil temperature below 80°C is recommended.

(8) Oil temperature limits are -40°C to 105°C with limited periods of 10 minutes at 105°C to 110°C.

(9) Propeller N_P is plus or minus 30 RPM.

2.3.2 FUEL

Maximum Fuel Imbalance Between Tanks ..... 20 US gal
Approved Fuels:

- ASTM-D1655 JET A,
- MIL-DTL-83133 Grade JP-8,
- Any other fuel which complies with the latest revision of Pratt & Whitney Service Bulletin 14004.

CAUTION

THE USE OF AVIATION GASOLINE (AVGAS) MUST BE RESTRICTED TO EMERGENCY PURPOSES ONLY. AVGAS MUST NOT BE USED FOR MORE THAN 150 CUMULATIVE HOURS DURING ANY PERIOD BETWEEN ENGINE OVERHAUL PERIODS.

NOTE

Use of AVGAS must be recorded in the engine logbook.

Anti-Icing Additive:

Anti-icing additive must be used for all flight operations in ambient temperatures below 0°C.

WARNING

OPERATING IN AMBIENT TEMPERATURES LESS THAN 0°C WITHOUT FOLLOWING THE PROCEDURE TO ADD ANTI-ICING ADDITIVES MAY LEAD TO ICE IN THE FUEL SYSTEM WHICH MAY EVENTUALLY BLOCK THE DELIVERY LINES AND COMPONENTS OF THE FUEL SYSTEM, INCLUDING THE FUEL FILTER, SUBSEQUENTLY RESTRICTING OR STOPPING THE FLOW OF FUEL TO THE ENGINE.

Anti-icing additive must conform to MIL-DTL-27686 or MIL DTL-85470.

Anti-icing additives must be in compliance with the latest revision of Pratt & Whitney Service Bulletin 14004.

Additive concentration must be between a minimum of 0.06% and a maximum of 0.15% by volume.

CAUTION

THE CORRECT MIX OF ANTI-ICING ADDITIVE WITH THE FUEL IS IMPORTANT. CONCENTRATIONS OF MORE THAN THE MAXIMUM (0.15% BY VOLUME) WILL CAUSE DAMAGE TO THE PROTECTIVE PRIMER AND SEALANTS OF THE FUEL TANKS. DAMAGE WILL OCCUR IN THE FUEL SYSTEM AND ENGINE COMPONENTS.

2.3.3 ENGINE OIL

Oil grade or specification:

Any oil conforming to MIL-PRF-23699G, Type II (5cSt) and as specified in the latest revision of Pratt and Whitney Service Bulletin 14001.

Refer to Section 8 for a list of approved engine oils current as of the time of publication.

2.3.4 PROPELLER

Propeller operating limits (Np)

Maximum Normal..... 1700 RPM
(plus or minus 30 RPM)
Maximum Transient: ..... 1870 RPM
(limited to 6 minutes)
Maximum Reverse..... 1650 RPM

Operation of the propeller in the POWER lever BETA range is prohibited in flight.

The POWER lever must not be lifted over the gate into the BETA range on the ground when the engine is not running.

Stabilized operation on the ground between 401 and 900 RPM is prohibited.

WARNING

STABILIZED GROUND OPERATION WITHIN THE PROPELLER RESTRICTED RPM RANGE (401-900 RPM) CAN GENERATE HIGH PROPELLER STRESSES AND RESULT IN PROPELLER FAILURE, AND LOSS OF CONTROL OF THE AIRPLANE.

2.6 OPERATION LIMITATIONS

2.6.1 TEMPERATURE

Operating Temperature

-54°C (-65°F) to 49°C (120°F), 0% to 100% relative humidity

2.6.2 MANEUVER

This airplane is certified in the Utility category.

Only maneuvers required for normal flight are approved including normal stalls, chandelles, lazy eights, and turns with the angle of bank limited to 90 degrees.

Aerobatic maneuvers are prohibited.

Intentional spins are prohibited.

2.6.3 ALTITUDE OPERATION

Maximum Operating Altitude ..... 34,000 PA
Maximum Positive Cabin Pressure Differential ..... 6.6 psid

2.6.4 FLIGHT LOAD FACTOR

Flaps UP.....+4.4g, -1.76g
Flaps T/O or FULL.....+2.0g, -0.0g

2.6.5 AUTOPILOT

The AFCS preflight test must successfully complete prior to use of the autopilot and flight director or manual electric trim.

The autopilot and yaw damper must be OFF during takeoff and landing.

Minimum Autopilot Speed
- Flaps UP ..... 115 KIAS
- Flaps T/O ..... 110 KIAS
- Flaps FULL ..... 95 KIAS

Autopilot Minimum-Use Height:
- Takeoff and Climb ..... 400 ft AGL
- Enroute and Descent ..... 800 ft AGL
- Approach (GP or GS Mode)..... Higher of 200 ft AGL or Approach MDA, DA, DH
- Approach (FLC, VS, PIT or ALT Mode)..... Higher of 400 ft AGL or Approach MDA

2.6.6 AUTOTHROTTLE

Autothrottle must be disengaged during the following:

- Below 200 ft AGL during landing
- Engine out operations
- During use of the Manual Override (MOR) lever

2.6.7 GARMIN G1000 NXi INTEGRATED AVIONICS SYSTEM

2.6.7.1 GENERAL

The appropriate revision of the Garmin G1000 NXi Cockpit Reference Guide must be immediately available to the pilot during flight. The system software version stated in the Cockpit Reference Guide must be appropriate for the system software version displayed on the equipment.

The G1000 NXi must be turned on and operated for at least 30 minutes before takeoff if ground outside air temperature is -40°C (-40°F) or below.

The fuel required, fuel remaining, and gross weight estimate functions of the G1000 NXi are supplemental information only and must be verified by the flight crew.

Use of the MFD checklists as the only set of onboard airplane checklists is prohibited. POH checklists must be onboard the airplane. The MFD Checklist display is advisory only. It cannot contradict the POH/AFM checklists and supplements the Pilot's Operating Handbook checklists.

Use of the NAVIGATION MAP page for pilotage navigation is prohibited. The NAVIGATION MAP is intended only to enhance situational awareness.

Use of SAFETAXI, FLITECHARTS, CHARTVIEW, SURFACEWATCH, or TAXIWAY ROUTING functions as the basis for ground maneuvering is prohibited. These functions have not been qualified to be used as an airport moving map display (AMMD) and should only be used to improve pilot situational awareness during ground operations.

Use of the Terrain Proximity or Terrain Awareness Warning System (TAWS-B) (optional) information for primary terrain avoidance is prohibited. The Terrain Proximity Map is intended only to enhance situational awareness.

Datalink weather information displayed by the G1000 NXi system is limited to supplemental use only. XM, Garmin Connext, or FIS-B weather data is not a source of official weather information. Use of the NEXRAD, PRECIP, XM LTNG and DL LTNG (Datalink Lightning) data on the MAP – NAVIGATION MAP, MAP – WEATHER DATA LINK (XM), MAP – WEATHER DATA LINK (CNXT), and MAP – WEATHER DATA LINK (FIS-B) pages for hazardous weather, e.g., thunderstorm penetration, is prohibited.

NEXRAD, PRECIP, XM LTNG and DL LTNG information on the MAP – NAVIGATION MAP, MAP – WEATHER DATA LINK (XM), MAP – WEATHER DATA LINK (CNXT), and MAP – WEATHER DATA LINK (FIS-B) pages is intended only as an aid to enhance situational awareness of hazardous weather, not penetration. It is the pilot's responsibility to avoid hazardous weather using official weather data sources.

Use of the Garmin Synthetic Vision Technology (SVT) for flight guidance, navigation, traffic avoidance, or terrain avoidance is prohibited. Maneuvering the airplane in any phase of flight such as taxi, takeoff, approach, landing, or roll out must not be predicated on the SVT imagery. The Synthetic Vision Technology is not intended to be used independently of traditional attitude instrumentation. Consequently, SVT is disabled when traditional attitude instrumentation is not available. Otherwise, the traditional attitude instrumentation will always be visible in the foreground with SVT features in the background.

TAS, ADS-B, and ROA traffic information must not be the only basis for traffic avoidance maneuvers. The pilot is responsible for seeing and avoiding traffic, complying with ATC clearances, and ensuring the runway is clear before entering, crossing, taking off, or landing without relying solely on TAS, ADS-B, or ROA traffic information. TAS, ADS-B, and ROA traffic presentations are for advisory use only, serving as an aid to visually acquire traffic and increase situational awareness.

2.6.7.2 ATTITUDE AND HEADING REFERENCE SYSTEM (AHRS)

NOTE

This section only refers to the AHRS portion of the ADAHRS system.

The airplane must not operate in the regions listed below. Flying in these regions may lead to loss of attitude or heading information, and possibly even loss of airplane control.

NOTE

Alternative procedures must be established for dispatch if the GEO LIMITS system message advisory is displayed.

Excluded Regions	Latitude	Longitude
North	North of 72° N	All longitudes
	North of 70° N	Between 70° W and 128° W. (Northern Canada)
	North of 70° N	Between 85° E and 114° E. (Northern Russia)
	North of 65° N	Between 75° W and 120° W. (Northern Canada)
South	South of 70° S	All longitude
	South of 55° S	Between 120° E and 165° E. (South of Australia and New Zealand)

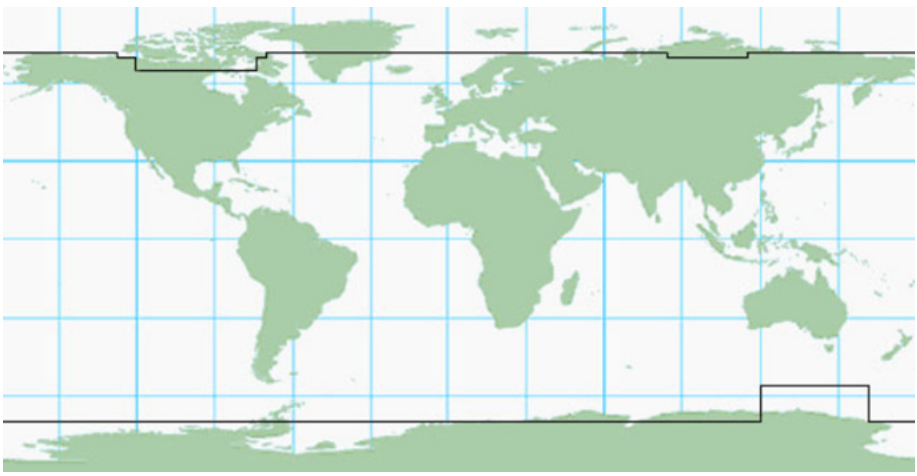

2.6.10.3 USE OF AUTOPILOT IN ICING CONDITIONS

Autopilot engagement is prohibited in the following conditions:

- Severe icing (reference Section 1.6.7).
- Ice is observed forming aft of the protected surfaces of the wing or horizontal stabilizer.
- Indications of frequent autopilot re-trimming while engaged.
- **P MISTRIM**, **R MISTRIM**, or **Y MISTRIM** CAS message is displayed.
- Any unusually small or large control forces or control deflections are required to move the flight controls while the autopilot is disengaged.

WARNING

THE AUTOPILOT MAY NOT MAINTAIN A SAFE AIRSPEED IF ICE ACCRETES ON THE AIRPLANE. MONITOR AIRSPEED CLOSELY.

WARNING

EXIT ICING CONDITIONS IMMEDIATELY IF ANY GRINDING OR STICKING IS FELT IN THE CONTROLS OR AUTOPILOT DISCONNECTS UNEXPECTEDLY.

CAUTION

THE AUTOPILOT MAY MASK TACTILE CUES THAT INDICATE ADVERSE CHANGES IN HANDLING CHARACTERISTICS.

2.6.11 ICE PROTECTION

2.6.11.1 DE-ICE BOOTS

De-ice boot minimum operating temperature is -40°C (-40°F).

De-ice boot operation is limited to a maximum OAT of 37.8°C (100°F).

De-ice boot functional check is limited to a maximum OAT of 49°C (120°F).

Minimum torque when operating de-ice boots at or below 10,000 ft is 15%.

Minimum torque when operating de-ice boots above 10,000 ft is 35%.

2.6.11.2 WINDSHIELD HEAT

Continuous operation of windshield heat is limited to an OAT of 5°C (41°F) or less. When OAT is greater than 5°C (41°F), windshield heat is limited to 30 seconds of operation.

2.6.11.3 INERTIAL SEPARATOR

Inertial separator actuation (switching from OFF to ON and from ON to OFF) in flight is limited to a maximum OAT of 15°C (59°F).

2.6.11.4 ADVISORY ICE DETECTOR

A satisfactory completion of the ice detector preflight test must be completed before each flight into known icing conditions.

2.6.12 AIRFRAME

Use of DEFROST together with EMERG PRESS is prohibited.

2.6.12.1 FLAP OPERATION

Flap extension above FL180 is prohibited.

Flight is prohibited with any flap hinge covers missing or damaged.

Takeoff with flaps FULL is prohibited.

2.6.12.2 LANDING GEAR

Extending or retracting the landing gear at bank angles in excess of 45 degrees is prohibited.

The landing gear may not fully retract into the uplocks with a load factor in excess of 1.4.

2.6.12.3 TURBULATORS, STALL STRIPS, AND VORTEX GENERATORS

Flight is prohibited with any turbulators, stall strips, or vortex generators missing or damaged.

System	Number Required	Types of Operation (Day, Night, VFR, IFR and FIKI*) *Flight Into Known Icing
PFD Heading Indication	1	NIGHT, IFR, FIKI
PFD Attitude Indication	1	NIGHT, IFR, FIKI
PFD Altitude Indication	1	DAY, NIGHT, VFR, IFR, FIKI
PFD Airspeed Indication	2	DAY, NIGHT, VFR, IFR, FIKI
PFD OAT Indication*	1	NIGHT, IFR, FIKI
NAV Radio	1	NIGHT, IFR, FIKI
Magnetometer	1	NIGHT, IFR, FIKI
Gyroscopic Directional Indication (HSI)	1	NIGHT, IFR, FIKI
Clock	1	NIGHT, IFR, FIKI
Attitude Indicator	2	NIGHT, IFR, FIKI
Static System	1	DAY, NIGHT, VFR, IFR, FIKI
Pitot Probe	1	DAY, NIGHT, VFR
Pitot Probe	2	IFR, FIKI
ATA 77 - Engine Indicating		
ITT Indication	1	DAY, NIGHT, VFR, IFR, FIKI
Fuel Flow Indication	1	DAY, NIGHT, VFR, IFR, FIKI
Oil Pressure Indication	1	DAY, NIGHT, VFR, IFR, FIKI
Oil Temperature Indication	1	DAY, NIGHT, VFR, IFR, FIKI
Propeller Speed, Np	1	DAY, NIGHT, VFR, IFR, FIKI
Engine Speed, Ng	1	DAY, NIGHT, VFR, IFR, FIKI
*Must be operational for flight into known icing. This supersedes any relief provided by an MEL.		

This Page Intentionally Left Blank

3.4.3 ENGINE FAILURE IN FLIGHT

1. Autopilot & Autothrottle	**DISENGAGE**
2. POWER Lever	**IDLE**
3. PROP Lever	**FEATHER**
4. Turn towards nearest landing area.	
5. Crew Oxygen Masks (above 14,000 ft)	**DON**

6. MASK MICS Switch ..... AS REQUIRED
7. Flaps ..... UP
8. Best Glide Airspeed ..... 129 KIAS
9. All Occupants ..... SEATED WITH SEATBELTS SECURE
10. *If in range of landing site:*
    a. Expedite descent to FL230.
11. *If cabin altitude exceeds 14,000 ft and passenger masks do not automatically deploy:*
    a. EMERG OXYGEN Switch ..... ON

❖ *IF TIME PERMITS*

12. Perform AIR START (3.6.2).

❖ *IF TIME DOES NOT PERMIT*

12. Perform FORCED LANDING (3.9.1).

Amplification

A total loss of combustion is indicated by a loss of fuel flow, low ITT, and/or NG below 40%. In case of fuel flow positive, ITT above 400°C, and NG above 40%, perform POWER LEVER CONTROL LOSS (MANUAL OVERRIDE OPERATION) (3.4.4).

NOTE

A turn towards the nearest landing area and re-engagement of the autopilot may be expedited by pressing and holding any Direct-To key on the G1000 NXi for three seconds to initiate SmartGlide.

If above FL230 and within gliding distance of landing area, consider expediting descent to FL230, below which an air start can be attempted.

3.4.4 POWER LEVER CONTROL LOSS (MANUAL OVERRIDE OPERATION)

1. Autopilot & Autothrottle	**DISENGAGE**
2. POWER Lever	**IDLE**
3. MAN OVRD Lever	**DEPLOY AND ENGAGE SLOWLY**

4. AUTO THROTTLE Circuit Breaker (**R T ╠ 1►**) .....PULL
5. Land as soon as possible.

WARNING

DEPENDING ON AIRFIELD CONDITIONS, AND AIRPLANE WEIGHT AND CONFIGURATION, THE AVAILABLE POWER MAY NOT BE SUFFICIENT TO ENSURE A GO-AROUND.

WARNING

TOTAL LANDING DISTANCE WILL BE INCREASED WITHOUT THE USE OF GROUND-FINE.

CAUTION

WHEN MAN OVRD LEVER IS IN OPERATION, DO NOT PERMIT NG TO FALL BELOW 75%, AVOID RAPID CONTROL MOVEMEMENTS, AND OBSERVE ENGINE INSTRUMENTS.

After touchdown:

6. MAN OVRD Lever ..... FULL DOWN
7. Brakes .....AS REQUIRED

Amplification

A power lever control loss with an erratic loss of power or partial power rollback is indicated by positive fuel flow, ITT above 400°C, and NG remaining at or above 40%. In case of loss of fuel flow, low ITT, and/or NG below 40%, perform ENGINE FAILURE IN FLIGHT (3.4.3).

Switch control of the engine from the POWER lever to the manual override (MOR) lever referencing this checklist.

Disable ESP to prevent Autothrottle Engine Protection from engaging.

3.5 EMERGENCY DESCENT

3.5.1 EMERGENCY DESCENT PROFILES

Conditions:

- Airplane Weight - 8,000 lb
- Landing gear up
- Propeller feathered

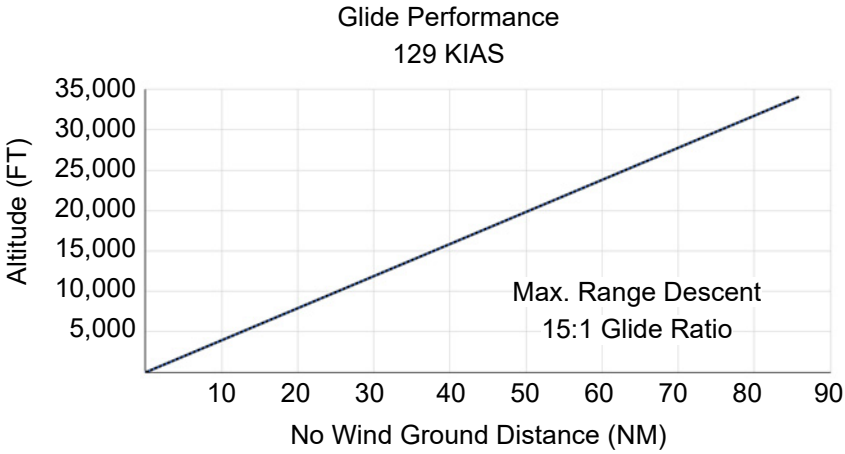

Two defined emergency descent procedures are:

1. Maximum Range - a descent that will cover the greatest distance over the ground.

2. Maximum Rate - a descent that will lose altitude in the shortest amount of time.

The choice of the type of descent to perform will depend on the kind of failure and the current situation. Other factors to consider when selecting which descent to use are:

- Cabin altitude and oxygen duration
- Electrical power endurance
- Distance to a suitable landing area
- Flight conditions (IMC, VMC, FIKI, etc.)
- Minimum safe altitude
- Fuel reserves.

The pilot must consider the entire situation and adjust his or her priorities accordingly.

3.5.2 MAXIMUM RATE EMERGENCY DESCENT

1. Autopilot & Autothrottle	**DISENGAGE**
2. POWER Lever	**IDLE**
3. PROP Lever	**MAX RPM**
4. Pitch	**10° TO 20° NOSE DOWN**
5. Airspeed	**M_{MO}/V_{MO}**

CAUTION

IF SIGNIFICANT TURBULENCE IS EXPECTED, OR IF SUSPECTED STRUCTURAL PROBLEM, DO NOT DESCEND AT INDICATED AIRSPEEDS GREATER THAN V_O.

Amplification

The pilot may roll into a 45-degree bank while pitching down to establish the descent more quickly. Once the airspeed is established in the descent, roll wings level.

Initiate the level-off from the descent approximately 1,000 feet above the target altitude.

3.5.3 MAXIMUM RANGE EMERGENCY DESCENT

1. Autothrottle ..... DISENGAGE
2. POWER Lever ..... IDLE
3. PROP Lever ..... FEATHER
4. Flaps ..... UP
5. Landing Gear ..... UP
6. Best Glide Airspeed ..... 129 KIAS

NOTE

A turn towards the nearest landing area and engagement of the autopilot may be expedited by pressing and holding any Direct-To button on the G1000 NXi for three seconds to initiate SmartGlide.

3.7 FIRE, SMOKE, OR FUMES

3.7.1 ENGINE OR COCKPIT/CABIN FIRE DURING START OR ON THE GROUND

1. Airplane	**STOP**
2. COND Lever	**FUEL CUTOFF**
3. FUEL TANK SELECTOR Knob	**OFF**

4. BATT 1 & BATT 2 Switches ..... OFF
5. Airplane ..... EVACUATE
6. Fire ..... EXTINGUISH

3.7.2 ENGINE FIRE IN FLIGHT

1. Autopilot & Autothrottle	**DISENGAGE**
2. POWER Lever	**IDLE**
3. PROP Lever	**FEATHER**
4. COND Lever	**FUEL CUTOFF**
5. FUEL TANK SELECTOR Knob	**OFF**
6. Crew Oxygen Masks (above 14,000 ft)	**DON**

7. MASK MICS Switch ..... AS REQUIRED
8. Initiate MAXIMUM RATE EMERGENCY DESCENT (3.5.2).
9. PRESS AIR Switch ..... OFF
10. L & R FUEL PUMP Switches ..... OFF
11. *If fire is extinguished:*
    a. Best Glide Airspeed ..... 129 KIAS

WARNING

AFTER AN ENGINE FIRE IN FLIGHT, DO NOT ATTEMPT AN AIR START.

12. *If smoke evacuation is required:*
    a. Oxygen Mask Regulator ..... EMGCY
    b. EMERG OXYGEN Switch ..... ON
    c. DUMP VALVE Switch ..... ON
    d. DOOR SEAL Switch ..... OFF
    e. GROUND FRESH AIR Switch ..... ON
13. *If cabin altitude exceeds 14,000 ft and passenger masks do not automatically deploy:*
    a. EMERG OXYGEN Switch ..... ON
14. Perform FORCED LANDING (3.9.1).

3.7.3 COCKPIT/CABIN ELECTRICAL FIRE IN FLIGHT

1. Crew Oxygen Masks	**DON**
2. Oxygen Mask Regulator	**EMGCY**

3. MASK MICS Switch ..... ON
4. EMERG OXYGEN Switch ..... ON
5. DUMP VALVE Switch ..... ON
6. Notify ATC of emergency and upcoming loss of communication.
7. STBY ALTN Switch ..... OFF
8. STARTER GEN Switch ..... OFF
9. BATT 1 & BATT 2 Switches ..... OFF
10. Fly by reference to Standby Instrument.
11. Fire Extinguisher ..... USE AS REQUIRED

❖ *IF FIRE NOT EXTINGUISHED*

12. Initiate MAXIMUM RATE EMERGENCY DESCENT (3.5.2).
13. Perform FORCED LANDING (3.9.1).

❖ *IF FIRE IS EXTINGUISHED*

12. Initiate descent to 10,000 ft or minimum safe altitude (if higher).
13. *If smoke or fumes are present or essential electrical equipment is required:*
    a. X-TIE Circuit Breaker (**L T ╠ 2►**) ..... PULL
    b. BATT 1 Switch ..... ON
14. *If smoke and/or fumes are present:*
    a. HI PRESS AIR Switch ..... ON
    b. DOOR SEAL Switch ..... OFF
15. *If smokes/fumes return:*
    a. BATT 1 Switch ..... OFF
16. Land as soon as possible.
    a. Landing Gear will not extend normally, plan for extending landing gear using Emergency Landing Gear Extension.
       i. Airspeed ..... BELOW 150 KIAS
       ii. Emergency Gear Extension Handle ..... ACTIVATE
    b. Flaps will not extend, plan on landing with flaps UP.
       i. Approach Speed (Normal Mode) ..... 115 KIAS

CAUTION

ALLOW FOR LANDING DISTANCE INCREASE OF UP TO 65% MORE THAN FLAPS FULL.

3.8 LANDING GEAR

3.8.1 LANDING GEAR FAILS TO RETRACT

Conditions:
- LANDING GEAR control UP, and
- One or more gear position indicators remain red after a normal gear actuation movement period.

1. Airspeed ..... BELOW 150 KIAS
2. Landing gear indicators..... CHECK
3. LANDING GEAR Control ..... DOWN, WAIT FOR GEAR EXTENSION TO COMPLETE, THEN UP

NOTE

Slowing down and/or reducing power will often allow the gear to retract.

4. *If landing gear retraction failure persists:*
   a. LANDING GEAR Control ..... DOWN
   b. Land as soon as practical.
5. *If* **HYD PUMP** *caution appears:*
   a. Refer to HYD PUMP (3A.7.19).

NOTE

If either the left or right main gear does not indicate up-and-locked with the LANDING GEAR control in the UP position, the hydraulic pump will remain active, eventually resulting in a **HYD PUMP** caution.

3.8.2 LANDING GEAR FAILS TO EXTEND

Conditions:
- LANDING GEAR control DOWN, and
- One or more gear position indicators not indicating down and locked (green) after a normal gear actuation movement period.

1. Airspeed ..... BELOW 150 KIAS
2. LAMP TEST ..... PRESS, CHECK GEAR INDICATOR
3. LANDING GEAR Control ..... UP, WAIT FOR GEAR RETRACTION TO COMPLETE, THEN DOWN
4. *If landing gear fails to extend normally:*
   a. Airspeed ..... BELOW 150 KIAS
   b. LANDING GEAR Control ..... DOWN
   c. GEAR CTRL Circuit Breaker (**L B ╠ 1 ►**) ..... PULL
   d. Emergency Gear Extension Handle ..... ACTIVATE

WARNING

AFTER EMERGENCY GEAR DEPLOYMENT, DO NOT ATTEMPT TO RETRACT GEAR.

   e. POWER Lever ..... AS REQUIRED
   f. Airspeed ..... BELOW 150 KIAS

❖ *IF ALL LANDING GEAR INDICATE UNSAFE:*

5. Perform LANDING WITH GEAR UP (3.9.2).

❖ *IF EITHER OR BOTH MAIN LANDING GEAR INDICATES UNSAFE:*

5. Perform LANDING WITH MAIN GEAR UNSAFE (3.9.3).

❖ *IF NOSE LANDING GEAR INDICATES UNSAFE:*

5. Perform LANDING WITH NOSE GEAR UNSAFE (3.9.4).

Amplification

LAMP TEST forces the gear-down indicators to illuminate. Crosscheck all gear indicators to confirm gear position.

NOTE

If any landing gear are still indicating up-and-locked, LAMP TEST may trigger a GEAR MISCOMP caution.

The emergency gear extension may only be used once per flight and will require servicing after its use.

NOTE

A failure of any of the up-lock or landing gear actuators results in an inability to extend the associated gear.

NOTE

Although a loss of hydraulic pressure is independent from the loss of nitrogen pressure, a single hose is common to both fluid paths, a blockage or leakage of which could conceivably be a single point of failure common to both extension functions.

3.8.3 LANDING GEAR INDICATES TRANSITION/UNSAFE IN CRUISE

Conditions:

- LANDING GEAR control UP, and
- One or more gear position indicators remain red or in transition.

1. Airspeed ..... BELOW 150 KIAS
2. Landing gear indicators ..... CHECK
3. LANDING GEAR Control ..... DOWN, WAIT FOR GEAR EXTENSION TO COMPLETE, THEN UP

NOTE

Slowing down and/or reducing power will often allow the gear to retract.

4. *If landing gear transition or unsafe persists:*
   a. LANDING GEAR Control ..... DOWN
   b. Land as soon as practical.
5. *If* **HYD PUMP** *caution appears:*
   a. Refer to HYD PUMP (3A.7.19).

NOTE

If either the left or right main gear does not indicate up-and-locked with the LANDING GEAR control in the UP position, the hydraulic pump will remain active, eventually resulting in a **HYD PUMP** caution.

3.9 EMERGENCY LANDINGS

3.9.1 FORCED LANDING

1. Seat Backs ..... UPRIGHT
2. Seat Belts ..... SECURE
3. Passengers ..... BRIEF
4. ELT ..... ON

Before touchdown:

5. COND Lever ..... FUEL CUTOFF
6. FUEL TANK SELECTOR Knob ..... OFF
7. DUMP VALVE Switch ..... ON
8. Flaps ..... AS REQUIRED
9. Emergency Gear Extension System ..... AS REQUIRED
10. Landing Airspeed ..... FLAPS UP: 110 KIAS
    (Normal Mode) FLAPS T/O: 105 KIAS
    FLAPS FULL: 95 KIAS
11. BATT 1 & BATT 2 Switches ..... OFF

After the airplane has stopped:

12. Airplane ..... EVACUATE AS REQUIRED

Amplification

Glide range to landing site permitting, flaps should be deployed incrementally to FULL before touchdown to minimize airspeed on landing. Flap extension from UP to FULL takes approximately 12 seconds.

If landing site is suitable, land with gear DOWN. If landing site is not suitable for gear down landing, land with gear UP. Emergency gear extension takes approximately five seconds.

3.9.2 LANDING WITH GEAR UP

1. If able, have ground personnel visually verify gear position.
2. Passengers ..... BRIEF
3. Flaps ..... FULL
4. Approach Speed (Normal Mode) ..... 95 KIAS

When runway is assured:

5. Autothrottle ..... DISENGAGE
6. POWER Lever ..... IDLE
7. PROP Lever ..... FEATHER
8. COND Lever ..... FUEL CUTOFF
9. FUEL TANK SELECTOR Knob ..... OFF
10. BATT 1 & BATT 2 Switches ..... OFF

After the airplane has stopped:

11. Airplane ..... EVACUATE AS REQUIRED

3.11.5 ELECTRONIC STABILITY PROTECTION (ESP) ENGAGEMENT

1. Use flight controls and power lever as required to correct the abnormal flight condition.

NOTE

The autothrottle may engage/disengage automatically to correct the abnormal flight condition

NOTE

If the airplane remains within the ESP engagement envelope for more than approximately 10 seconds, the autopilot will automatically engage in LVL mode, and will be accompanied by an aural “ENGAGING AUTOPILOT” alert.

3.12 AUTOTHROTTLE

3.12.1 AUTOTHROTTLE MALFUNCTION

Conditions:

- Power lever deviates unexpectedly during autothrottle operation.

1. AT DISC Switch	**PRESS AND HOLD**
2. POWER Lever	**ADJUST MANUALLY**

3. AUTOTHROTTLE Circuit Breaker (**R T** ╠**1►**) ..... PULL
4. AT DISC Switch ..... RELEASE

3.12.2 AUTOTHROTTLE OVERRIDE

Conditions:

- Autothrottle servo has been manually overridden,
- Amber **AT** flashing continuously on PFD, and
- Continuous “AUTOTHROTTLE” aural alert.

1. AT DISC Switch .....PRESS AND RELEASE
(to cancel disconnect tone)

2. POWER Lever .....ADJUST MANUALLY

3.13 ELECTRICAL

3.13.1 TOTAL LOSS OF ELECTRICAL POWER

1. Crew Oxygen Masks (above 14,000 ft) .....DON

2. Standby Instrument ..... REFERENCE

NOTE

The Standby Instrument may require acknowledgment to remain powered by its internal battery after losing airframe power.

3. POWER Lever .....SET BY REFERENCE TO ATTITUDE AND AIRSPEED

CAUTION

WHEN FULLY CHARGED, THE INTERNAL BATTERY IN THE STANDBY INSTRUMENT WILL PROVIDE POWER FOR AT LEAST 60 MINUTES IF AIRPLANE POWER IS LOST.

4. Land as soon as possible.
   a. Landing Gear will not extend normally, plan for extending landing gear using Emergency Landing Gear Extension.
      i. Airspeed ..... BELOW 150 KIAS
      ii. Emergency Gear Extension Handle .....ACTIVATE
   b. Flaps will not extend or retract, plan on landing with flaps in current position.
      i. Approach Speeds (Normal Mode) .....FLAPS UP: 115 KIAS
      FLAPS T/O: 110 KIAS
      FLAPS FULL: 95 KIAS

CAUTION

IF LANDING WITH ICE ACCRETIONS ON THE AIRPLANE, FINAL APPROACH AIRSPEEDS ARE 122 - 133 KIAS FLAPS UP AND 119 - 130 KIAS FLAPS T/O.

CAUTION

If landing with flaps up, ALLOW FOR LANDING DISTANCE INCREASE OF UP TO 65% MORE THAN FLAPS FULL.

Amplification

If VMC is encountered, attempt a descent and landing under VMC and avoid IFR conditions.

3.17 WARNING (RED) CAS MESSAGES — IN FLIGHT

3.17.1 AUTO DESCENT

AUTO DESCENT

"EMERGENCY DESCENT, EMERGENCY DESCENT, EMERGENCY DESCENT"

Conditions:

- Autopilot engaged,
- Cabin altitude above 15,000',
- Pressure altitude above 14,900',
- CABIN ALT HIGH Warning active, and
- DUMP VALVE Switch off.

1. To acknowledge and silence EDM alert:
   a. PFD ALERT Softkey .....PRESS AND RELEASE
2. To override auto-descent:
   a. Autopilot ..... DISCONNECT WITH AP KEY
   b. Autopilot ..... AS REQUIRED
   c. EDM OVERRIDE Advisory .....ACKNOWLEDGE
3. To cancel EDM Override and re-enable EDM:
   a. Pressurize the cabin and/or descend so that the cabin altitude falls below 10,000'.

Amplification

The AUTO DESCENT warning must be acknowledged to cancel the aural alert.

When EDM is active, disconnecting the autopilot with the AP key will cancel the auto-descent. The pilot may re-engage the autopilot at this point to continue flight with EDM overridden (deactivated).

To cancel EDM Override and re-enable EDM, the cabin altitude must be below 10,000'.

3.17.2 CABIN ALT HIGH

CABIN ALT HIGH

Conditions:

- Cabin altitude above 10,000 ft.

1. Crew Oxygen Masks (above 14,000 ft) .....DON

2. MASK MICS Switch.....AS REQUIRED
3. Immediately begin a descent to 10,000 ft or minimum safe altitude (if higher).
4. If cabin altitude is rising rapidly accelerate to VMO/MMO to maximize descent rate.

CAUTION

IF SIGNIFICANT TURBULENCE IS EXPECTED, OR IF SUSPECTED STRUCTURAL PROBLEM, DO NOT DESCEND AT INDICATED AIRSPEEDS GREATER THAN V_O.

5. *If cabin altitude exceeds 14,000 ft:*
   a. EMERG OXYGEN Switch ..... ON
6. DOOR SEAL Switch.....CHECK ON
7. PRESS AIR Switch.....CHECK ON
8. DUMP VALVE Switch.....CHECK OFF
9. HI PRESS AIR Switch ..... ON
10. CABIN Indicator..... CHECK
11. *If cabin altitude remains at or above 10,000 ft:*
    a. DEFROST Switch..... OFF
    b. EMERG PRESS Switch ..... ON
    c. PRESS AIR Switch..... OFF

CAUTION

USE OF DEFROST TOGETHER WITH EMERG PRESS IS PROHIBITED.

3.17.6 ENGINE CHIP

ENGINE CHIP

Conditions:
- Engine chip detector has activated.

1. Engine Instruments ..... CHECK & MONITOR
2. Autothrottle.....DISENGAGE
3. POWER Lever .....REDUCE TO MINIMUM REQUIRED FOR SAFE FLIGHT
4. Land as soon as possible.
5. Maintenance required.

CAUTION

CHIPS OF METAL IN THE ENGINE MAY BE AN EARLY INDICATION OF IMPENDING ENGINE FAILURE.

CAUTION

MAKE BEST EFFORT TO RETAIN GLIDE CAPABILITY TO A SELECTED LANDING AIRFIELD WHILE MANEUVERING TO LAND.

3.17.7 GEN FAIL

GEN FAIL

Conditions:
- Generator amps less than 5, and
- NG is greater than 75%

1. STARTER GEN Switch .....VERIFY ON
2. GEN RESET Switch.....PRESS & RELEASE

❖ *IF* **GEN FAIL** *EXTINGUISHES:*

3. Continue fight.
4. Service aircraft as soon as practical.

❖ *IF* **GEN FAIL** *PERSISTS:*

3. STARTER GEN Switch.....OFF
4. PROP HEAT Switch.....OFF
5. 12V CONVERT Circuit Breaker (**L B◄7╣**).....PULL
6. ALTN AMP Indicator ..... VERIFY POSITIVE
7. Electrical Load .....MONITOR

NOTE

Alternator output is internally limited to 41 Amps. Additional load will deplete the batteries. Alternator operation is limited to one hour.

8. Descend to FL190 or below.

- PROCEDURE CONTINUES ON NEXT PAGE -

9. Exit icing conditions as soon as possible.
10. *If in icing conditions:*
    a. R PITOT HEAT Circuit Breaker (**R B** ╠╒**5►**) .....PULL
    b. **R PITOT HEAT FAIL** Caution ..... ACKNOWLEDGE
    c. If copilot requires airspeed indication:
        i. Copilot's (Right) PFD.....SELECT ADC1 SENSOR
        ii. Notify ATC of loss of RVSM capability.

When not in icing conditions and protected surfaces are clear of residual ice:

11. PITOT STALL HT Switch..... OFF
12. DE-ICE BOOTS Switch ..... OFF
13. WINDSH HEAT Switch..... OFF
14. Non-Essential Electrical Equipment ..... OFF
15. ICE Light Switch ..... OFF
16. INERT SEP Switch.....AS REQUIRED
17. IGNITERS Switch.....AS REQUIRED
18. Electrical Load.....MONITOR
19. Land as soon as practical.

Amplification

The **ALTERNATOR ON** caution should display.

Reserve power with an operating standby alternator and following this load shedding procedure supports at least 60 minutes of electrical loads essential for continued safe flight, exiting icing conditions, and landing.

3.17.10 NP HIGH

NP HIGH

Conditions:
- N_P is above 1730 RPM.

1. PROP Lever ..... REDUCE TO 1700 RPM OR LESS
2. *If N_P not under control of PROP Lever:*
   a. Autothrottle.....DISENGAGE
   b. POWER Lever .....REDUCE (to idle if necessary)

❖ *IF N_P REMAINS BETWEEN 1730 AND 1802 RPM:*

3. Airspeed.....150 KIAS
4. POWER Lever .....AS REQUIRED TO SUSTAIN FLIGHT
5. Land as soon as practical.

❖ *IF N_P IS ABOVE 1802 RPM:*

3. Airspeed..... 120 KIAS OR LESS
4. POWER Lever .....AS REQUIRED TO SUSTAIN FLIGHT
5. Land as soon as practical.

NOTE

Overspeed operation up to 106% (1802 RPM) is allowed with no time limit. Operation from 106% (1802 RPM) to 110% (1870 RPM) is limited to six (6) minutes. Beyond six minutes, propeller overhaul is required.

3.17.11 OIL PRESS LOW

OIL PRESS LOW

Conditions:
- N_G is greater than 51%, and
- Oil pressure is less than 60 psi.

1. Autothrottle.....DISENGAGE
2. POWER Lever ..... REDUCE TO MINIMUM NECESSARY
3. Land as soon as possible.

CAUTION

OIL PRESSURES UNDER 60 PSI MAY BE AN EARLY INDICATION OF IMPENDING ENGINE FAILURE.

CAUTION

MAKE BEST EFFORT TO RETAIN GLIDE CAPABILITY TO A SELECTED LANDING AIRFIELD WHILE MANEUVERING TO LAND.

3.17.12 OIL TEMP HIGH

OIL TEMP HIGH

Conditions:
- Oil temperature is greater than 110°C.

1. Autothrottle ..... DISENGAGE
2. POWER Lever ..... REDUCE
3. Airspeed ..... 140 KIAS
4. *If* **OIL TEMP HIGH** *warning persists:*
   a. LANDING GEAR Control ..... DOWN
5. *If* **OIL TEMP HIGH** *warning persists:*
   a. Land as soon as possible.
   b. Maintenance required.

CAUTION

OIL TEMPERATURES ABOVE 110°C ARE UNSAFE AND MAY LEAD TO A LOSS OF OIL PRESSURE AND/OR ENGINE FAILURE.

CAUTION

MAKE BEST EFFORT TO RETAIN GLIDE CAPABILITY TO A SELECTED LANDING AIRFIELD WHILE MANEUVERING TO LAND.

CAUTION

CLIMB RATE WILL BE DETRIMENTALLY AFFECTED WHILE SIGNIFICANT ICE ACCRETIONS REMAIN ON THE AIRFRAME AND/OR WITH LANDING GEAR EXTENDED.

NOTE

Oil temperature between 105 to 110°C is limited to 10 minutes.

3.17.13 OVERSPEED

OVERSPEED

"OVERSPEED-OVERSPEED-OVERSPEED"

Conditions:
- Airspeed is greater than V_{MO} or M_{MO}.

1. POWER Lever ..... REDUCE
2. Pitch ..... UP AS REQUIRED

NOTE

Unless disabled, Electronic Stability Protection (ESP) will engage automatically to reduce power and to pitch the aircraft up to reduce airspeed.

SECTION 3A

ABNORMAL PROCEDURES

TABLE OF CONTENTS

3A.1 GENERAL 5
3A.2 DRY MOTORING 5
3A.3 ENGINE 6
3A.3.1 ENGINE DOES NOT SHUT DOWN 6
3A.4 PRESSURIZATION/OXYGEN 6
3A.4.1 CABIN DOES NOT DEPRESSURIZE BEFORE LANDING 6
3A.5 FLIGHT ENVIRONMENT 6
3A.5.1 FROST/MOISTURE ON INTERNAL WINDSHIELD 6
3A.6 AUTOMATED FLIGHT CONTROL SYSTEM 7
3A.6.1 SMARTGLIDE INITIATE 7
3A.6.2 SMARTGLIDE CANCEL 7
3A.7 CAUTION (AMBER) CAS MESSAGES — IN FLIGHT 8
3A.7.1 ALTERNATOR ON 8
3A.7.2 AUTO FUEL FAIL 8
3A.7.3 AUTO FUEL OFF 9
3A.7.4 AUTO PTRM FAIL 9
3A.7.5 BATT FAULT 10
3A.7.6 BATT LOW 10
3A.7.7 BATT SERVICE 11
3A.7.8 BRAKE HLD DSBLD 11
3A.7.9 DIFF P HIGH 12
3A.7.10 DOOR SEAL OFF 12
3A.7.11 DUCT TEMP HIGH 13
3A.7.12 FLAPS FAIL 14
3A.7.13 FUEL FILT BLOCK 15
3A.7.14 FUEL IMBALANCE 15
3A.7.15 FUEL PRESS LOW 16
3A.7.16 FUEL PUMP OFF 17

3A.7.17 FUEL QTY LOW 17
3A.7.18 GEAR MISCOMP 18
3A.7.19 HYD PUMP 18
3A.7.20 ICE 19
3A.7.21 ICE DETECT FAIL 19
3A.7.22 INERT SEP FAIL 20
3A.7.23 MAN PTRM FAIL 20
3A.7.24 MIN OAT 20
3A.7.25 MISTRIM 21
3A.7.26 NITROGEN LOW 21
3A.7.27 OAT FAIL 22
3A.7.28 OXY SYS OFF 22
3A.7.29 OXYGEN LOW 23
3A.7.30 PITOT HEAT OFF 23
3A.7.31 PITOT HT FAIL 24
3A.7.32 PITOT RELAY FAIL 25
3A.7.33 PRESS AIR OFF 25
3A.7.34 PROP HEAT FAIL 25
3A.7.35 PUSH MODE FAIL 26
3A.7.36 PUSHER ICE MODE 26
3A.7.37 PUSHER OFF 27
3A.7.38 STALL CMP FAIL 27
3A.7.39 STALL HT FAIL 28
3A.7.40 STARTER 29
3A.7.41 TRIM DISC 30
3A.7.42 WSH HEAT ON 30
3A.8 CAUTION (AMBER) CAS MESSAGES — ON GROUND 31
3A.8.1 BATT FAULT — ON GROUND 31
3A.8.2 BATT HEAT — ON GROUND 31
3A.8.3 BATT LOW — ON GROUND 31
3A.8.4 BATT SERVICE — ON GROUND 32
3A.8.5 BRAKE HOLD — ON GROUND 32
3A.8.6 FLAPS FAIL — ON GROUND 32
3A.8.7 GEAR MISCOMP — ON GROUND 32
3A.8.8 ICE — ON GROUND 33
3A.8.9 ICE DETECT FAIL — ON GROUND 33
3A.8.10 INERT SEP FAIL — ON GROUND 33

3A.8.11 NITROGEN LOW — ON GROUND 34
3A.8.12 NO BATT START — ON GROUND 34
3A.8.13 OAT FAIL — ON GROUND 34
3A.8.14 OXYGEN LOW — ON GROUND 35
3A.8.15 PITOT HT FAIL — ON GROUND 35
3A.8.16 PUSHER OFF — ON GROUND 35
3A.8.17 STALL CMP FAIL — ON GROUND 35
3A.8.18 STALL HT FAIL — ON GROUND 36
3A.8.19 STARTER — ON GROUND 36

This Page Intentionally Left Blank

3A.7.11 DUCT TEMP HIGH

DUCT TEMP HIGH

Conditions:

- Cabin bleed air duct temperature is high

1. POWER Lever..... REDUCE TO MINIMUM PRACTICAL
2. EMERG PRESS Switch ..... OFF
3. HI PRESS AIR Switch..... OFF
4. Climate Hot Air Control ..... FULL COLD (counterclockwise)
5. DEFROST Switch ..... OFF
6. WINDSH HEAT Switch ..... OFF

NOTE

Windshield heat may be turned back on, if necessary for forward visibility, five minutes prior to landing.

7. *If* **DUCT TEMP HIGH** *caution remains after 5 minutes:*
   a. Reduce power and descend immediately to 10,000 ft or minimum safe altitude (if higher).
   b. PRESS AIR Switch ..... OFF
   c. Land as soon as practical.

NOTE

Flight at lower altitudes significantly decreases fuel efficiency and range.

3A.7.12 FLAPS FAIL

FLAPS FAIL

Conditions:

- Flaps between positions for more than 20 seconds, or
- Flap limit switch failure

1. Visually determine flap position.
2. *If flaps in FULL position:*
   a. FLAPS Switch .....T/O
   b. FLAPS Circuit Breaker (**R B ╠3►**).....RESET
      (maximum 1 time)
   c. Observe flap position and movement.
   d. *If flaps fail to move:*
      i. Maximum bank angle ..... 30 DEGREES
      ii. Minimize maneuvering flight.
3. FLAPS Circuit Breaker (**R B ╠3►**).....PULL
4. Minimum Airspeed..... 115 KIAS
5. Maximum Airspeed.....180 KIAS MAXIMUM (Flaps UP to T/O)
   130 KIAS MAXIMUM (Flaps T/O to FULL)
6. Land as soon as practical.

CAUTION

ALLOW FOR LANDING DISTANCE INCREASE OF 65% MORE THAN FLAPS FULL.

CAUTION

WHEN LANDING IN PUSHER ICE MODE, INCREASE LANDING DISTANCE BY 20%. THIS MODE IS ACTIVE WHEN THE DE-ICE BOOTS SWITCH OR PROP HEAT SWITCH IS SELECTED ON.

3A.7.13 FUEL FILT BLOCK

FUEL FILT BLOCK

Conditions:
- Fuel filter bypass is impending or has occurred

1. Fuel Pressure ..... MONITOR
2. Land as soon as possible.
3. Maintenance required.

Amplification

Fuel is or may soon be bypassing the fuel filter for delivery to the engine.

Any existing particulate matter in the fuel supply may block fuel flow through the fuel control unit, causing an engine flame-out.

3A.7.14 FUEL IMBALANCE

FUEL IMBALANCE

Conditions:
- More than a 20-gallon imbalance between fuel tanks

NOTE

During uncoordinated flight, the fuel indicators may temporarily indicate a fuel imbalance. Restoring the aircraft to coordinated flight will return the fuel indicators to a balanced condition and automatically clear the **FUEL IMBALANCE** caution.

1. FUEL QTY ..... CHECK
2. FUEL AUTO SEL Switch ..... OFF
3. FUEL TANK SELECTOR Knob ..... FULLEST TANK

Once fuel tanks are balanced again:

4. FUEL AUTO SEL Switch ..... ON
5. *If* **FUEL IMBALANCE** *caution reappears:*
   a. FUEL AUTO SEL Switch ..... OFF
   b. FUEL TANK SELECTOR Knob ..... OPERATE MANUALLY

3A.7.15 FUEL PRESS LOW

FUEL PRESS LOW

Conditions:

- Fuel pressure at the engine pump inlet is less than 5 psi

1. L & R FUEL PUMP Switches.....CHECK ON
2. FUEL AUTO SEL Switch..... OFF
3. FUEL TANK SELECTOR Knob..... SWITCH TANKS

❖ *IF* **FUEL PRESS LOW** *CAUTION EXTINGUISHES:*

4. FUEL QTY.....CHECK REMAINING
5. Switch fuel tanks only as necessary to remain within fuel imbalance limitations.

❖ *IF* **FUEL PRESS LOW** *CAUTION PERSISTS:*

4. POWER Lever..... REDUCE TO MINIMUM NECESSARY FOR CONTINUED FLIGHT, AVOID HIGH POWER AND RAPID THROTTLE MOVEMENTS
5. Descend to FL210 or below.
6. Land as soon as practical.

CAUTION

EXTENDED OPERATION WITH FUEL PRESSURE BELOW 5 PSI MAY RESULT IN ENGINE DAMAGE.

NOTE

Record the amount of time the engine has run with fuel pressure at or below 5 PSI in the engine logbook.

3A.7.16 FUEL PUMP OFF

L FUEL PUMP OFF
R FUEL PUMP OFF

Conditions:
- Left or right fuel pump switch is OFF

1. L and/or R FUEL PUMP Switches.....ON
2. *If* **L/R FUEL PUMP OFF** *caution persists:*
   a. IGNITER Switch.....ON
   b. FUEL QTY ..... CHECK REMAINING
   c. FUEL AUTO SEL Switch .....OFF
   d. FUEL TANK SELECTOR Knob ..... TANK WITH OPERABLE PUMP
   e. Descend to FL210 or below.
   f. Switch fuel tanks as necessary to remain within fuel imbalance limitations.
   g. Land as soon as possible.

CAUTION

MAXIMUM FUEL IMBALANCE BETWEEN TANKS IS 20 US GALLONS.

CAUTION

EXTENDED OPERATION WITH FUEL PRESSURE BELOW 5 PSI MAY RESULT IN ENGINE DAMAGE.

NOTE

Record the amount of time the engine has run with fuel pressure at or below 5 PSI in the engine log book.

3A.7.17 FUEL QTY LOW

L FUEL QTY LOW
R FUEL QTY LOW

Conditions:
- Less than 15 gallons in the affected fuel tank

1. FUEL QTY..... CHECK REMAINING
2. IGNITER Switch.....ON
3. FUEL AUTO SEL Switch .....OFF
4. FUEL TANK SELECTOR Knob ..... SWITCH TO FULLEST TANK
5. Land as soon as possible.

CAUTION

AVOID UNCOORDINATED FLIGHT (SLIPS OR SKIDS) AND HIGH PITCH ATTITUDES GREATER THAN 10 DEGREES.

3A.7.18 GEAR MISCOMP

GEAR MISCOMP

Conditions:

- One or more landing gears are sensing both up and locked, and down and locked

Before landing:

1. Landing Gear ..... DOWN
2. *If unable to verify landing gear in down-and-locked position:*
   a. Perform LANDING GEAR FAILS TO EXTEND (3.8.2).

NOTE

Maximum speed with a **GEAR MISCOMP** is 150 KIAS.

3A.7.19 HYD PUMP

HYD PUMP

Conditions:

- Hydraulic system pressurizing for more than 20 seconds

CAUTION

LANDING GEAR MAY NOT OPERATE NORMALLY.

1. Airspeed..... BELOW 150 KIAS
2. *If any landing gear indicates in-transit or unsafe:*
   a. Landing Gear Control ..... DOWN
3. *If* **HYD PUMP** *caution does not extinguish:*
   a. GEAR CTRL Circuit Breaker (**L B** **1►**) .....PULL
4. Land as soon as practical.

CAUTION

MAINTAIN AIRSPEED AT OR BELOW 150 KIAS.

NOTE

Operation with the GEAR CTRL circuit breaker pulled will open the fuel return line from the engine to the left tank. Monitor fuel levels for imbalance.

- PROCEDURE CONTINUES ON NEXT PAGE -

3A.7.25 MISTRIM

P MISTRIM
R MISTRIM
Y MISTRIM

Conditions:
- Autopilot indicates out-of-trim condition.

1. Monitor flight path.
2. *If autopilot deviates from commanded flight path:*
   a. Control Yoke ..... GRASP AND MAINTAIN CONTROL
   b. AP/TRIM DISC Switch .....PRESS AND RELEASE
   c. Trim the airplane.

CAUTION

MANUAL ELEVATOR (PITCH) TRIM WILL CAUSE THE AUTOPILOT TO DISCONNECT. MANUAL RUDDER (YAW) TRIM WILL CAUSE THE YAW DAMPER TO DISCONNECT. HOLD THE CONTROL YOKE FIRMLY. SIGNIFICANT FORCE ON THE CONTROL YOKE MAY BE REQUIRED.

3A.7.26 NITROGEN LOW

NITROGEN LOW

Conditions:
- Nitrogen pressure in the emergency landing gear extension system is less than 1700 psi

1. N2PRES ..... MONITOR
2. *If nitrogen pressure is less than 1500 PSI:*
   a. Airspeed ..... AT OR BELOW 150 KIAS
   b. Landing Gear ..... EXTEND
   c. Flight must be conducted with landing gear down.

CAUTION

EXTENDED FLIGHT WITH GEAR DOWN SIGNIFICANTLY DECREASES FUEL EFFICIENCY AND RANGE.

NOTE

When nitrogen pressure drops below 1500 PSI, there may be insufficient pressure to utilize the emergency landing gear extension system.

3A.7.27 OAT FAIL

OAT FAIL

Conditions:

- Faults in one or both OAT systems are detected.

1. Watch for visible moisture.
2. *If visible moisture is detected:*
   a. IGNITER Switch ..... ON
   b. PITOT STALL HT Switch ..... ON
   c. PROP HEAT Switch ..... ON
   d. INERT SEP Switch ..... ON
   e. DE-ICE BOOTS Switch ..... ON
   f. WINDSH HEAT Switch ..... AS REQUIRED
   g. ICE LIGHT Switch ..... AS REQUIRED
3. Exit/avoid icing conditions.
4. Monitor airspeed.

NOTE

WSH HT ON caution/warning may erroneously be displayed during windshield heat operation.

3A.7.28 OXY SYS OFF

OXY SYS OFF

Conditions:

- The oxygen bottle regulator switch is closed

1. OXYGEN BOTTLE Switch ..... ON
2. *If* **OXY SYS OFF** *caution persists:*
   a. OXY PANEL Circuit Breaker (**L B ◄4╢**) ..... RESET
   (maximum 1 time)
3. *If* **OXY SYS OFF** *caution persists and range considerations allow:*
   a. Descend to FL250.

NOTE

Flight at lower altitudes significantly decreases fuel efficiency and range.

3A.7.32 PITOT RELAY FAIL

PITOT RELAY FAIL

Conditions:
- Pitot heat in “on ground” mode

1. PITOT STALL HT Switch .....OFF, THEN ON
2. *If* **PITOT RELAY FAIL** *caution remains:*
   a. Exit/avoid icing conditions.
   b. Remain clear of visible moisture.
   c. Land as soon as practical.

3A.7.33 PRESS AIR OFF

PRESS AIR OFF

Conditions:
- PRESS AIR switch is OFF

1. PRESS AIR Switch .....ON

3A.7.34 PROP HEAT FAIL

PROP HEAT FAIL

Conditions:
- PROP HEAT switch is ON, and
- Outside air temperature is less than 0°C, and
- No propeller heat current is sensed

1. PROP HEAT Switch.....OFF, WAIT 5 SECS, ON
2. *If* **PROP HEAT FAIL** *caution reappears:*
   a. PROP HEAT Switch.....OFF
3. Exit/avoid icing conditions and avoid visible moisture.

NOTE

Pusher Ice Mode will remain active unless both the PROP HEAT and DE-ICE BOOTS switches are turned off.

3A.7.35 PUSH MODE FAIL

PUSH MODE FAIL

Conditions:

- SPS pusher schedule does not match airplane configuration

1. Minimum Airspeed ..... FLAPS UP: 130 KIAS
   FLAPS T/O: 125 KIAS
   FLAPS FULL: 110 KIAS

CAUTION

WHEN LANDING IN PUSHER ICE MODE INCREASE LANDING DISTANCE BY 20%.

Amplification

If the **PUSH MODE FAIL** caution is displayed when both the prop heat and de-ice boots systems are off, and the airplane is below 18,000' MSL, then the Pusher Ice Mode schedule is incorrectly active. This may cause the SPS to activate at a lower angle of attack (higher airspeed) than expected. The pilot should fly higher minimum airspeeds to avoid inadvertent activation of the SPS.

If the **PUSH MODE FAIL** caution is displayed when either the prop heat or de-ice boots system is on, or the airplane is above 18,000' MSL, the Pusher Ice Mode schedule is incorrectly not active. This may cause the SPS to activate at a higher angle of attack (lower airspeed) than expected. The pilot should fly higher minimum airspeeds to avoid unprotected stalls.

3A.7.36 PUSHER ICE MODE

PUSHER ICE MODE

Conditions:

- Pusher Ice Mode is enabled, and
- Landing Gear Down

1. Approach Speeds ..... Flaps T/O: 119 – 130 KIAS (Pusher Ice Mode)

CAUTION

WHEN PUSHER ICE MODE IS ENGAGED, DO NOT LAND WITH FLAPS IN THE UP OR FULL POSITION.

3A.8 CAUTION (AMBER) CAS MESSAGES — ON GROUND

3A.8.1 BATT FAULT — ON GROUND

BATT 1 FAULT
BATT 2 FAULT

Conditions:
- Battery is indicating an internal fault.

1. Do not start engine.
2. Fault condition must be corrected before flight.

Amplification

Internal faults may be temporary and may result in partial or fully degraded functionality. Faults may clear with time or upon next usage. Verify battery health and availability by cross-checking other parameters (voltage, state of charge, etc.).

3A.8.2 BATT HEAT — ON GROUND

BATT 1 HEAT
BATT 2 HEAT

Conditions:
- Battery heaters are on, and
- Engine is not running.

1. Wait until **BATT 1 HEAT** and **BATT 2 HEAT** cautions clear or perform a GPU start.
2. *If* **BATT 1 LOW** *or* **BATT 2 LOW** *caution appears:*
   a. GPU start is recommended.
3. *If* **NO BATT START** *caution appears:*
   a. GPU start is required.

Amplification

The heaters will only provide heat when the BATT Switches are ON and when the battery temperature is sensed below 0°C. The heaters will stop heating when the internal battery temperature is above 5°C.

3A.8.3 BATT LOW — ON GROUND

BATT 1 LOW
BATT 2 LOW

Conditions:
- Battery state of charge is below 75%.

1. If practical, charge batteries prior to engine start.

After engine start:

2. Wait until **BATT 1 LOW** and **BATT 2 LOW** cautions clear prior to takeoff.

3A.8.4 BATT SERVICE — ON GROUND

BATT 1 SERVICE
BATT 2 SERVICE

Conditions:
- Battery is indicating a permanent fault.

1. Maintenance required before flight.

3A.8.5 BRAKE HOLD — ON GROUND

BRAKE HOLD

Conditions:
- Brake Hold is active,
- NG is above 75%, and
- TRQ is below 55%

1. Brakes..... GUARD AND USE AS NECESSARY

CAUTION

BRAKE HOLD MAY NOT HOLD THE AIRCRAFT IN POSITION AT POWER SETTINGS ABOVE IDLE, DEPENDING ON THE CONDITION OF THE BRAKES.

2. Power .....REDUCE BEFORE TURNING OFF BRAKE HOLD

3A.8.6 FLAPS FAIL — ON GROUND

FLAPS FAIL

Conditions:
- Flaps between positions for more than 20 seconds, or
- Flap limit switch failure

1. Maintenance required before flight.

3A.8.7 GEAR MISCOMP — ON GROUND

GEAR MISCOMP

Conditions:
- One or more landing gears are sensing both up and locked, and down and locked.

1. Maintenance required before flight.

SECTION 4

NORMAL PROCEDURES

TABLE OF CONTENTS

4.1 GENERAL 3
4.2 AIRSPEEDS FOR NORMAL OPERATION 3
4.3 NORMAL PROCEDURES 4
4.3.1 PREFLIGHT INSPECTION 4
4.3.2 BEFORE STARTING ENGINE 9
4.3.3 STARTING ENGINE 11
4.3.4 AFTER START/BEFORE TAXI 13
4.3.5 TAXI 14
4.3.6 BEFORE TAKEOFF 15
4.3.7 TAKEOFF 16
4.3.8 CLIMB 17
4.3.9 CRUISE 18
4.3.10 DESCENT 19
4.3.11 BEFORE LANDING 19
4.3.12 LANDING 20
4.3.13 BALKED LANDING/GO-AROUND 21
4.3.14 AFTER LANDING 22
4.3.15 SHUTDOWN 22
4.4 SUPPLEMENTAL PROCEDURES 23
4.4.1 ENGINE IGNITER PROCEDURES 23
4.4.2 ENGINE INERTIAL SEPARATOR PROCEDURES 23
4.4.3 COLD WEATHER OPERATION 23
4.4.4 HIGH ALTITUDE OPERATION 24
4.4.5 UNPRESSURIZED FLIGHT 24
4.4.6 ENGINE COMPRESSOR STALLS 24
4.4.7 NOISE CHARACTERISTICS 25

4.5 ENVIRONMENT SUPPLEMENTAL PROCEDURES 26

4.5.1 FLIGHT WITH HEAVY PRECIPITATION 26

4.5.2 TAKEOFF OR LANDING ON RUNWAYS CONTAMINATED WITH MELTING OR NON-COMPACTED SNOW. 26

4.5.3 TAKEOFF OR LANDING ON RUNWAYS THAT ARE ICY OR COVERED WITH COMPACTED SNOW 27

4.5.4 OPERATIONS IN SEVERE ICING CONDITIONS 28

4.5.5 OPERATIONS IN ICING CONDITIONS 29

4.6 ADVISORY (WHITE) CAS MESSAGES 31

4.6.1 AC ON 31

4.6.2 BATT CHRGING 31

4.6.3 BATT HEAT 31

4.6.4 BRAKE HOLD 31

4.6.5 DE-ICE ON 31

4.6.6 DOOR SEAL LOW 32

4.6.7 EDM OVERRIDE 32

4.6.7 ESP DEGRADE 32

4.6.8 ESP FAIL 32

4.6.9 ESP OFF 32

4.6.10 ICE 33

4.6.11 IGNITER ON 33

4.6.12 INERT SEP ON 33

4.6.13 PAX OXYGEN ON 33

4.6.14 PUSHER ICE MODE 34

4.6.15 STARTER 34

4.6.16 WSH HEAT ON 34

18. **ICE** Caution ..... VERIFY & CLEAR
19. BATT 1 & BATT 2 Switches ..... AS REQUIRED

NOTE

If the **BATT 1 HEAT** or **BATT 2 HEAT** caution is displayed, it is recommended to leave the batteries on to warm the batteries.

If the **BATT 1 LOW** or **BATT 2 LOW** caution is displayed, it is recommended, but not required, to connect a GPU with the batteries on to replenish them.

Area ②: Cabin

1. Seats and Seat Belts ..... CONDITION & SECURITY
2. Windows ..... CONDITION
3. Emergency Exit ..... LATCHED, LOCK PIN REMOVED

Area ③: Left Wing

1. Flap ..... CONDITION & SECURITY
2. Aileron ..... CONDITION & SECURITY
3. Aileron Trim Tab ..... CONDITION & SECURITY
4. Aileron Turbulators (20) ..... CONDITION & SECURITY
5. Static Wicks (2) ..... CONDITION & SECURITY
6. Fuel Tank Vent ..... CLEAR
7. Wing Tip, Lens, Lights ..... CONDITION
8. Pitot Tube ..... CLEAR
9. Fuel Quantity ..... CHECK VISUALLY
10. Fuel Filler Cap ..... CONDITION & SECURITY
11. De-Ice Boot ..... CONDITION & SECURITY
12. Leading Edge Turbulators (6) ..... CONDITION & SECURITY
13. SPS Lift Transducer ..... CONDITION & MOVEMENT
14. Leading Edge Stall Strips (2) ..... CONDITION & SECURITY
15. Lower Wing Surface ..... CONDITION
16. Lower Wing Vortex Generators (6) ..... CONDITION & SECURITY
17. OAT Probes ..... CONDITION
18. Ice Detector ..... CONDITION & CLEANLINESS
19. Fuel Tank Sump ..... SAMPLE FUEL
20. Main Gear Assembly and Tire ..... CONDITION

Area ④: Forward Fuselage / Nose

1. Left Inertial Separator Exit ..... CLEAR & CLOSED
2. Left Intercooler Inlet ..... CLEAR
3. Engine Oil Level ..... ABOVE MIN.
4. Left Exhaust Stack ..... CONDITION
5. Engine Cowling (Left Side) ..... SECURITY
6. Engine Inlet ..... CLEAR
7. Engine Inlet De-Ice Boot ..... CONDITION & SECURITY
8. Oil Cooler Inlet ..... CLEAR
9. Propeller/Spinner ..... CONDITION
10. Nose Gear Assembly and Tire ..... CONDITION
11. Engine Cowling (Right Side) ..... SECURITY
12. Right Exhaust Stack ..... CONDITION
13. Right Intercooler Inlet ..... CLEAR

14. Right Inertial Separator Exit ..... CLEAR & CLOSED

Area ⑤: Right Wing

1. Main Gear Assembly and Tire ..... CONDITION
2. Hydraulic Fluid Quantity ..... FULL
3. Fuel Tank Sump ..... SAMPLE FUEL
4. Lower Wing Vortex Generators (6) ..... CONDITION & SECURITY
5. Lower Wing Surface ..... CONDITION
6. Leading Edge Stall Strips (2) ..... CONDITION & SECURITY
7. SPS Lift Transducer ..... CONDITION & MOVEMENT
8. Leading Edge Turbulators (6) ..... CONDITION & SECURITY
9. De-Ice Boot ..... CONDITION & SECURITY
10. Fuel Quantity ..... CHECK VISUALLY
11. Fuel Filler Cap ..... CONDITION & SECURITY
12. Pitot Tube ..... CLEAR
13. Wing Tip, Lens, Lights ..... CONDITION
14. Fuel Tank Vent ..... CLEAR
15. Static Wicks (2) ..... CONDITION & SECURITY
16. Aileron Turbulators (20) ..... CONDITION & SECURITY
17. Aileron ..... CONDITION & SECURITY
18. Flap ..... CONDITION & SECURITY

Area ⑥: Rear Fuselage / Empennage

1. Emergency Exit ..... SECURITY
2. Right Static Ports ..... CONDITION & CLEAR
3. Air Conditioner Drain ..... CLEAR
4. Air Conditioner Inlet ..... CLEAR
5. Right Horizontal De-Ice Boot ..... CONDITION & SECURITY
6. Right Elevator ..... CONDITION & SECURITY
7. Right Elevator Static Wicks (2) ..... CONDITION & SECURITY
8. Rudder and Trim Tab ..... CONDITION & SECURITY
9. Rudder Static Wicks (2) ..... CONDITION & SECURITY
10. Left Elevator and Trim Tab ..... CONDITION & SECURITY
11. Left Elevator Static Wicks (2) ..... CONDITION & SECURITY
12. Left Horizontal De-Ice Boot ..... CONDITION & SECURITY
13. Air Conditioner Exhaust ..... CLEAR
14. Left Static Ports ..... CONDITION & CLEAR
15. Antennas ..... CONDITION & SECURITY
16. Main Entry Door Seals ..... CONDITION
17. Main Entry, Door, and Latches ..... CONDITION

Amplification

A thorough inspection of the airplane is recommended, especially if it was in long term storage, has recently undergone maintenance, or has been flown from unimproved airfields.

Before carrying out a preflight inspection, ensure that all required maintenance has been accomplished, review your flight plan, and compute weight and balance. Remove pitot tube covers, inlet covers, exhaust stack covers, and propeller tie-downs. Stow them appropriately.

4.3.3 STARTING ENGINE

1. Exterior Lights ..... AS REQUIRED
2. Propeller Area ..... CLEAR
3. FUEL TANK SELECTOR ..... LEFT
4. L & R FUEL PUMP Switches ..... ON
5. IGNITER Switch ..... ON
6. STARTER GEN Switch ..... ON
7. START Switch ..... PRESS & RELEASE
   a. Oil Pressure ..... VERIFY RISE
   b. NG ..... 12% MINIMUM
8. *If oil pressure does not rise or NG does not reach minimum speed:*
   a. DISCONTINUE ENGINE START (3.4.1).
9. COND Lever ..... LOW
10. FUEL FLOW Indicator ..... CHECK POSITIVE
11. ITT ..... MONITOR
    (870–1,000°C limited to 5 sec. 850–870°C limited to 20 sec.)
12. *If no light-off in 10 seconds or a rapid increase of ITT towards 1,000°C:*
    a. DISCONTINUE ENGINE START (3.4.1).
13. NG ..... VERIFY STABLE ABOVE 51%
14. *If NG stabilizes below 51% or ITT at idle approaches 750°C:*
    a. COND Lever ..... HIGH
    b. ITT ..... MONITOR
15. Engine Instruments ..... NORMAL
16. GEN AMP Indicator ..... VERIFY POSITIVE
17. *If GEN AMP indicator is not positive:*
    a. DISCONTINUE ENGINE START (3.4.1).
18. GPU (if applicable) ..... OFF, DISCONNECT

Amplification

The engine start cycle occurs in three phases: spool-up, light-off, and accelerate-to-idle. Normally, a balance of air and fuel is maintained throughout the process to keep temperatures under control.

NOTE

Use of the starter is governed by the limitations defined in Section 2.4.1 STARTER.

During spool-up, the gas generator starts spinning and moving air through the combustion chamber. The voltage at the starter/generator should remain at or above 18V, and the starter/generator should accelerate N_G a minimum of 1 percent per second. If the voltage-drop or turbine acceleration during spool-up begin to approach these numbers, check the capacity of the batteries.

Once the oil pressure has been verified and the gas generator (N_G) has achieved a sufficient speed (12%), light-off is achieved by setting the COND lever to LOW or HIGH which introduces fuel to the combustion chambers to be lit by the igniters.

CAUTION

TURNING ON THE IGNITERS AFTER INTRODUCING FUEL IS LIKELY TO CAUSE A TEMPERATURE EXCEEDANCE AND DAMAGE THE ENGINE.

NOTE

COLD START (oil temp below 5°C) - Set COND Lever to HIGH as soon as N_G is above 12%. Set COND Lever to LOW when N_G is above 51%.

WARM START (ITT above 150°C) - After N_G has stabilized, wait until ITT approaches 150° C before COND Lever is set to LOW.

Initial light-off occurs with fuel flowing through the primary nozzles. As the engine accelerates through approximately 35% N_G, secondary nozzles open to provide more fuel to the engine. Expect an increase in ITT as the secondary nozzles open. Rapid acceleration through 35% N_G suggests a start with the secondary nozzles already open, in which case, anticipate a hot start.

During the final phase of starting, the engine accelerates to the selected idle speed. The starter disengages at approximately 48% N_G. The generator will shortly thereafter come online once it can produce a voltage higher than the output of the batteries.

CAUTION

IF THE FRICTION IS NOT SET TIGHT ENOUGH, THE PROPELLER LEVER MAY INADVERTENTLY CREEP FORWARD OUT OF FEATHER ON ENGINE START AND CAUSE THE AIRCRAFT TO MOVE FORWARD IF THE BRAKES ARE NOT HELD FIRM.

4.3.4 AFTER START/BEFORE TAXI

1. IGNITER Switch ..... AUTO
2. PRE-TAXI Switches ..... ALL ON
3. Climate Controls ..... AS REQUIRED
4. Crew Oxygen Masks ..... PRESSURIZED
5. Autopilot ..... TEST
   a. AFCS Preflight Test ..... COMPLETE
   b. AP Switch ..... PRESS
   c. Flight Controls ..... RESTRICTED
   d. AP/TRIM DISC Switch ..... PRESS & RELEASE
   e. Warning Tone ..... VERIFY
6. Stall Prevention System ..... TEST
   a. STALL TEST Switch ..... PRESS & HOLD
   b. Flight Controls ..... VERIFY SHAKE & PUSH
   c. AP/TRIM DISC Switch ..... PRESS TO OVERRIDE
   d. STALL TEST Switch ..... RELEASE
   e. **TRIM DISC** Caution ..... CHECK ON
   f. TRIM RESET Switch ..... PRESS & RELEASE
   g. **TRIM DISC** Caution ..... CHECK CLEAR
7. Flight Controls ..... FREE & CORRECT
8. Avionics/Navigation ..... SET
9. Altimeters ..... SET
10. Transponder ..... AS REQUIRED
11. Landing Field Elevation ..... VERIFY/SET

Amplification

After turning on the standby alternator, the **ALTERNATOR ON** caution may appear, depending on the charge level of the batteries. This is considered normal whenever the COND lever is set to LOW.

During warm weather operations, it is acceptable to defer turning on PRESS AIR until the BEFORE TAKEOFF procedure to maintain a cooler cabin temperature.

Oxygen pressure and flow to the crew quick-don oxygen masks can be confirmed while turning on the oxygen bottle by listening for an audible whooshing sound and observing the in-line oxygen flow indicators.

The GFC™ 700 autopilot pre-flight test is conducted automatically, and during the test a **PFT** advisory will be displayed on the PFD. Upon successful completion of the preflight test, the white **PFT** advisory will disappear. Failure of the pre-flight test will be indicated with an **AFCS** warning.

Avionics and Navigation set up includes tuning COM and NAV radios, programming the route of flight into the FMS flight plan, and selecting the appropriate navigation source on the PFD CDI.

4.3.5 TAXI

1. TAXI Light ..... ON
2. PROP Lever ..... MAX RPM
3. COND Lever ..... HIGH
4. ALTN AMP Indicator ..... ZERO
5. Control Lever Friction ..... ADJUSTED
6. POWER Lever ..... AS REQUIRED
7. Brakes ..... CHECK
8. Nose Wheel Steering ..... CHECK
9. Flight Instruments ..... CHECK
10. Standby Instrument ..... AGREES WITH PFD

Amplification

POWER lever BETA range can be used during taxi to control taxi speed and improve brake life. When stopped, the POWER lever should be returned to the IDLE position (just forward of the gate) to improve air flow over the oil cooler and to reduce propeller blade erosion.

WARNING

STABILIZED GROUND OPERATION WITHIN THE PROPELLER RESTRICTED RPM RANGE (400-900 RPM) CAN GENERATE HIGH PROPELLER STRESSES AND RESULT IN PROPELLER FAILURE, AND LOSS OF CONTROL OF THE AIRPLANE.

CAUTION

THE USE OF REVERSE THRUST SHOULD BE MINIMIZED, ESPECIALLY ON UNPREPARED SURFACES, TO MINIMIZE PROPELLER BLADE EROSION AND POSSIBLE DAMAGE.

NOTE

During low-speed taxi with a strong tailwind, or when stopped with a strong tailwind, a moderate vibration can occur as a result of reverse airflow through the propeller disk with the blades at a positive pitch angle. This vibration can be significantly reduced by placing the POWER lever in the BETA range, or it can be eliminated by turning the airplane into the wind.

NOTE

Strong quartering tail winds require caution. Avoid excessive use of power and sharp braking when the airplane is in this condition. Use the steerable nose wheel and rudder to maintain direction.

During ground turns, verify operation of attitude, slip-skid, heading, and rate-of-turn indicators on PFD1, PFD2, and the Standby Instrument.

4.3.8 CLIMB

1. Yaw Damper ..... AS REQUIRED
2. Best Rate of Climb Speed (VY, S.L. to FL240) ..... 150 KIAS
3. Best Rate of Climb Speed (VY, above FL240) ..... 140 KIAS
4. Cruise Climb Speed ..... 150 - 180 KIAS
5. POWER Lever ..... MAXIMUM CLIMB POWER

NOTE

Referencing the dynamic TRQ bug on the EIS or the use of autothrottle during climb require the PROP lever to be set to MAX RPM.

6. Engine Instruments ..... MONITOR
7. Pressurization ..... CHECK
8. External lights ..... AS REQUIRED
9. ICE Switches ..... AS REQUIRED

Amplification

Frequent trim changes may be required as the airplane accelerates to climb speed. The yaw damper (YD) will automatically engage at 250' AGL to assist with rudder trim changes.

Normally, maximum climb power is maintained during the climb to cruise altitude. Adjust the POWER lever as required to prevent exceeding Maximum Climb Torque found in Section 5, maximum climb ITT of 840°C, or maximum climb Ng of 104%, whichever occurs first.

As torque is reduced below 83.3% at high altitude according to the torque tables, ITT will remain approximately constant during the final climb, establishing a typical climb ITT value for the particular engine being operated. This typical climb ITT for a particular engine will increase over the life of the engine, reducing the margin between this indicated ITT and the maximum climb ITT limit of 840°C.

For simplified engine operation during climb, power may be set first by torque, using 83.3%, then to maintain ITT at or below the typical climb ITT value for the particular engine being operated.

The PROP Lever should remain full forward (1700 RPM) for climb.

CAUTION

5 MINUTES AFTER TAKEOFF, MAXIMUM CLIMB POWER RATING IS 1000 SHP (83.3% TQ @ 1700 RPM). MONITOR ENGINE PARAMETERS DURING CLIMB AND REDUCE POWER AS NECESSARY TO REMAIN WITHIN LIMITATIONS.

CAUTION

SET IGNITER AND INERT SEP SWITCHES TO "ON" IF THERE IS VISIBLE MOISTURE (CLOUDS, RAIN, ETC.) WITH AN OAT OF 5°C (41°F) OR LESS.

When operating near the ITT limit, advance POWER lever slowly to allow the current ITT to be indicated. The rate of power and temperature increase of the engine is faster than the response rate of the ITT indicating system; therefore, a rapid POWER lever advance could cause a momentary over-temperature condition in the engine before the over-temperature would be indicated.

For a maximum performance climb, Best Rate of Climb Speed is recommended during instrument departures.

The following cruise climb speeds provide improved visibility over the nose and increased passenger comfort:

Below 10,000 ft MSL .....180 KIAS
10,000 ft to FL200 MSL.....170 KIAS
FL200 to FL300 MSL .....160 KIAS
Above FL300 MSL .....150 KIAS

Pressurization should be monitored throughout the climb.

4.3.9 CRUISE

1. POWER Lever ..... MAXIMUM CRUISE POWER OR LESS
2. Engine Instruments .....MONITOR
3. Pressurization.....MONITOR
4. Fuel Quantity, Balance .....MONITOR
5. ICE Switches .....AS REQUIRED

Amplification

Cruise is performed using any desired power setting up to the maximum cruise power (observe ITT, torque, and N_G cruise limits). Refer to cruise torque values in the cruise performance tables.

NOTE

Normal Cruise is recommended for engine longevity.

Do not exceed the maximum cruise torque or 840°C ITT shown in Cruise Performance charts in Section 5 for the particular altitude and temperature.

Propeller RPM may be reduced in order to provide for passenger comfort. Minimum recommended N_P in cruise is 1500 RPM.

CAUTION

SWITCH “IGNITER” AND “INERT SEP” TO “ON” IF THERE IS HEAVY PRECIPITATION.

4.4.7 NOISE CHARACTERISTICS

Increased emphasis on improving the quality of our environment requires renewed effort on the part of all pilots to minimize the effect of airplane noise on the public.

We, as pilots, can demonstrate our concern for environmental improvement, by application of the following suggested procedures, and thereby tend to build public support for aviation:

- Pilots operating airplane under VFR over outdoor assemblies of persons, recreational and park areas, and other noise-sensitive areas should make every effort to fly not less than 2,000 feet above the surface, weather permitting, even though flight at a lower level can be consistent with the provisions of government regulations.

- During departure from or approach to an airport, climb after takeoff and descent for landing should be made so as to avoid prolonged flight at low altitude near noise-sensitive areas.

NOTE

The above recommended procedures do not apply where they would conflict with Air Traffic Control clearances or instructions, or where, in the pilot's judgment, an altitude of less than 2,000 feet is necessary to adequately exercise the pilot’s duty to see and avoid other aircraft.

The corrected takeoff noise level of this airplane, established in compliance with 14 CFR Part 36, Appendix G (Amdt 36-31), and ICAO Annex 16, Volume I, Part II, Chapter 10, is 76.4 dB, as determined by flight tests. No determination has been made by the Federal Aviation Administration that the noise levels of this airplane are or should be acceptable for operation at, into, or out of any airport.

The above statement notwithstanding, the noise level stated above has been verified by and approved by the Federal Aviation Administration in noise level test flights conducted in accordance with 14 CFR Part 36, Appendix G, Amendment 31, Noise Standards: Airplane Type and Airworthiness Certification. The airplane noise is in compliance with all 14 CFR Part 36 and ICAO Annex 16, Volume I, Part II, Chapter 10 noise standards applicable to this type.

4.5 ENVIRONMENT SUPPLEMENTAL PROCEDURES

4.5.1 FLIGHT WITH HEAVY PRECIPITATION

1. IGNITER Switch ..... ON

NOTE

This action is intended to ensure immediate restarting without action from the pilot in the highly improbable occurrence of an engine flame-out due to an ingestion of heavy precipitation.

2. INERT SEP Switch ..... ON

4.5.2 TAKEOFF OR LANDING ON RUNWAYS CONTAMINATED WITH MELTING OR NON-COMPACTED SNOW.

- *PREFLIGHT INSPECTION*
  1. Remove any snow or ice from the wings, stabilizers, movable surfaces, engine inlet, landing gear wells, gear doors, flap hinges, and actuators and their fairings.
  2. Spray anti-icing fluid may be used on the wings, stabilizers and movable surfaces (upper and lower surfaces) and in the landing gear wells, shortly before takeoff. The engine must be shut down when applying anti-ice fluids.

- *TAXIING*
  1. Taxi at very slow speed (5 knots groundspeed maximum), flaps up, brake occasionally to keep the brake pads warm which will prevent locking due to freezing after takeoff.

- *BEFORE TAKEOFF*
  1. If the runway is long enough, perform takeoff with the flaps in the UP position. Consult the Flaps UP Takeoff Performance charts.

NOTE

The ground roll may be multiplied by 3 in some melting or non-compacted snow situations.

- *TAKEOFF*
  1. Lightly lift up the nose wheel during takeoff in order to reduce the forward resistance due to snow accumulation.
  2. After takeoff, workload permitting, normally retract the landing gear then perform a complete cycle (extension and retraction) at IAS less than or equal to 150 KIAS.

- *ON THE RAMP, AFTER LANDING OR TAXIING*
  1. Use wheel chocks and/or tie-down the airplane.

4.5.3 TAKEOFF OR LANDING ON RUNWAYS THAT ARE ICY OR COVERED WITH COMPACTED SNOW

❖ *PREFLIGHT INSPECTION*

1. Remove any snow or ice from the wings, stabilizers, movable surfaces, engine inlet, landing gear wells, gear doors, flap hinges, and actuators and their fairings.
2. Spray anti-icing fluid may be used on the wings, stabilizers and movable surfaces (upper and lower surfaces) and in the landing gear wells, immediately before takeoff. The engine must be shut down when applying anti-ice fluids.

❖ *TAXIING*

1. Taxi at very slow speed (5 KIAS maximum). Use ground fine area of throttle to adjust speed; avoid the use of reverse. Apply very smooth adjustments using the throttle.
2. Steer the airplane using the rudder. Make turns at a very low speed. Engine torque tends to make the airplane turn to the left.
3. Use brakes only at very low speed and progressively.

❖ *TAKEOFF*

1. After takeoff, workload permitting, normally retract the landing gear then perform a complete cycle (extension and retraction) at IAS less than or equal to 150 KIAS.

❖ *LANDING, AFTER TOUCHDOWN*

1. Use reverse only as necessary and very progressively by monitoring the airplane behavior.
2. Taxi at very slow speed (5 knots maximum). Use ground fine area of throttle to adjust speed. Apply very smooth adjustments using the throttle.
3. Steer the airplane using the rudder.
4. Make turns at a very low speed. Engine torque tends to make the airplane turn to the left.
5. Use brakes only at very low speed and progressively.

❖ *ON THE RAMP, AFTER LANDING OR TAXIING*

1. Use wheel chocks and/or tie-down the airplane.

4.5.4 OPERATIONS IN SEVERE ICING CONDITIONS

❖ *IDENTIFICATION OF SEVERE ICING OR SLD CONDITIONS*

The following cues may be used to identify possible severe icing or SLD conditions:

- Visible rain when outside air temperatures is below 5ºC; even as cold as -18ºC.
- Drops that splash or splatter on impact at outside air temperatures below 5ºC.
- Performance losses larger than normally encountered in icing conditions. It is possible to experience severe ice accretions on the underside of the wings or on the propeller blades which are not visible to the flight crew. Aircraft performance should be monitored closely.

The following cues may be used to identify severe icing or SLD conditions:

- Unprotected portions of the windscreen may begin to accumulate granular dispersed ice crystals or a translucent or opaque coating over the entire unprotected windscreen. This icing may be accompanied by other ice patterns, such as ridges. These patterns may occur from within a few seconds to half a minute after exposure to severe icing or SLD conditions.
- Ice may become visible on the upper surface of the wing, aft of the active part of the deicing boots. Pilots should look for irregular or jagged lines of ice or for pieces of ice shedding off the airplane. During night operations, adequate illumination should be used to observe all areas.
- Ice coverage may become unusually extensive, with visible ice fingers or feathers on parts of the airframe that normally would not be covered by ice.

❖ *PROCEDURE FOR EXITING SEVERE ICING OR SLD CONDITIONS*

1. Exit the area immediately by changing altitude and/or course.
2. If autopilot is engaged:
   a. Control Yoke .....GRASP AND MAINTAIN CONTROL
   b. AP/TRIM DISC Switch ..... PRESS & RELEASE
   c. Do not re-engage the autopilot until the airframe is clear of ice.
3. Avoid abrupt and excessive maneuvering that may exacerbate control difficulties.
4. If an unusual roll response or uncommanded control movement is observed, reduce angle of attack by increasing airspeed and/or rolling wings level (if in a turn), and apply additional power, if needed.
5. Avoid extending flaps during extended operations in icing conditions to reduce the possibility of ice forming on the upper surface of the wing further aft than normal.
6. If flaps are extended, do not retract them until the airframe is clear of ice.
7. Report these weather conditions to Air Traffic Control.

4.6 ADVISORY (WHITE) CAS MESSAGES

4.6.1 AC ON

AC ON

Conditions:
- The air conditioner is selected on

1. No action necessary.

4.6.2 BATT CHRGING

BATT 1 CHRGING
BATT 2 CHRGING

Conditions:
- Engine is not running, and
- The corresponding battery is being charged

1. No action necessary.

4.6.3 BATT HEAT

BATT 1 HEAT
BATT 2 HEAT

Conditions:
- The left or right battery heater is on, and
- Engine is running.

1. No action necessary.

4.6.4 BRAKE HOLD

BRAKE HOLD

Conditions:
- The electronic brake hold is engaged.

1. No action necessary.

4.6.5 DE-ICE ON

DE-ICE ON

Conditions:
- The DE-ICE BOOTS switch is ON

1. No action necessary.

4.6.6 DOOR SEAL LOW

DOOR SEAL LOW

Conditions:
- The DOOR SEAL switch is ON, and
- Door seal pressure is low for more than 10 seconds

1. Cabin Pressure ..... MONITOR

4.6.7 EDM OVERRIDE

EDM OVERRIDE

Conditions:
- Emergency Descent Mode has been disabled

1. To cancel EDM Override and re-enable EDM:
   a. Pressurize the cabin and/or descend so that the cabin altitude falls below 10,000'.

4.6.8 ESP DEGRADE

ESP DEGRADE

Conditions:
- ESP is degraded due to air data failures

1. PFD ..... CHECK AHRS, ADC, AND AFCS STATUS

NOTE

An ESP DEGRADE advisory may be caused by an AHRS, ADC, or AFCS failure. Check the status of the AHRS, ADC, and AFCS to confirm their function.

4.6.9 ESP FAIL

ESP FAIL

Conditions:
- ESP is inoperative

1. PFD..... CHECK AHRS, ADC, AND AFCS STATUS

NOTE

An ESP FAIL advisory may be caused by an AHRS, ADC, or AFCS failure. Check the status of the AHRS, ADC, and AFCS to confirm their function.

4.6.10 ESP OFF

ESP OFF

Conditions:
- ESP is selected off

1. No action necessary.

4.6.11 ICE

ICE

Conditions:
- Airframe icing condition detected, and
- PROP HEAT and DE-ICE BOOTS turned on

1. Unprotected surfaces of leading edges..... MONITOR

4.6.12 IGNITER ON

IGNITER ON

Conditions:
- The igniters are on

1. No action necessary.

4.6.13 INERT SEP ON

INERT SEP ON

Conditions:
- The inertial separator vanes are open

1. EIS indications and CAS messages..... MONITOR

NOTE

Turning on the inertial separators will cause a drop in TRQ and a rise in ITT. Monitor engine instruments for abnormal indications.

4.6.14 PAX OXYGEN ON

PAX OXYGEN ON

Conditions:
- The passenger oxygen system is pressurized

1. O2PRES Indicator..... MONITOR

4.6.15 PUSHER ICE MODE

PUSHER ICE MODE

Conditions:
- The pusher system is in pusher ice mode,
- The aircraft is below FL180, and
- Landing gear is retracted.

1. Approach Speeds .....Flaps T/O: 119 – 130 KIAS (Pusher Ice Mode)

CAUTION

LANDING WITH FLAPS UP OR FULL AND PUSHER ICE MODE ENGAGED IS PROHIBITED.

4.6.16 STARTER

STARTER

Conditions:
- The starter is engaged

1. No action necessary.

4.6.17 WSH HEAT ON

WSH HEAT ON

Conditions:
- The WINDSH HEAT switch is ON, and
- OAT is less than 5°C

1. No action necessary.

5.10 TAKEOFF PERFORMANCE

GR = Ground Roll (ft)

D50 = Takeoff Distance to clear a 50 ft obstacle

Conditions:

- Takeoff power set before brake release
- Paved, level, dry surface
- Rotate 90 KIAS
- Establish an attitude of 12.5º after rotation
- Headwind component = 0 knots
- Runway slope = 0º
- Inertial separator OFF

NOTE

Increase takeoff ground-roll distance by 22% for every 10 knots of tailwind up to 30 knots.

Increase takeoff distance to clear a 50 ft obstacle by 22% for every 10 knots of tailwind up to 30 knots.

Decrease takeoff ground-roll distance by 14% for every 10 knots of headwind up to 30 knots.

Decrease takeoff distance to clear a 50 ft obstacle by 11% for every 10 knots of headwind up to 30 knots.

Increase takeoff ground-roll distance 11% for every 1% of runway upslope up to 3% of slope.

Decrease takeoff ground-roll distance 1% for every 1% of runway downslope down to 3% of slope.

5.10.1 NOISE CHARACTERISTICS

The corrected takeoff noise level of this airplane, established in compliance with 14 CFR Part 36, Appendix G (Amdt 36-31), and ICAO Annex 16, Volume I, Part II, Chapter 10, is 76.4 dB, as determined by flight tests. No determination has been made by the Federal Aviation Administration that the noise levels of this airplane are or should be acceptable for operation at, into, or out of any airport.

5.10.2 FLAPS T/O

5.10.2.1 TAKEOFF WEIGHT: 6,000 LB

Takeoff Weight: 6,000 lb, Flaps T/O												
PA (ft)	ISA Temp (ºC)	Dist (ft)	Temperature (ºC)									
			ISA -55	ISA -40	ISA -30	ISA -20	ISA -10	ISA	ISA +10	ISA +20	ISA +30	ISA +40
SL	15.0	GR	666	732	778	825	873	921	971	1021	1193	1511
		D50	993	1084	1146	1209	1273	1339	1406	1474	1726	2211
2000	11.0	GR	725	799	850	902	955	1009	1064	1120	1345	1702
		D50	1074	1174	1242	1312	1384	1457	1531	1607	1939	2483
4000	7.1	GR	790	873	929	987	1046	1106	1167	1229	1529	1945
		D50	1162	1273	1349	1427	1507	1587	1670	1754	2199	2834
6000	3.1	GR	863	954	1017	1081	1147	1214	1282	1413	1748	2220
		D50	1260	1383	1468	1554	1643	1733	1825	2011	2509	3236
8000	-0.8	GR	943	1045	1115	1186	1259	1334	1410	1629	2008	2547
		D50	1368	1505	1600	1696	1794	1895	1997	2314	2880	3715
10000	-4.8	GR	1052	1168	1248	1329	1413	1498	1658	1910	2359	2998
		D50	1518	1674	1781	1891	2003	2117	2343	2710	3385	4386

5.10.2.2 TAKEOFF WEIGHT: 7,000 LB

Takeoff Weight: 7,000 lb, Flaps T/O												
PA (ft)	ISA Temp (ºC)	Dist (ft)	Temperature (ºC)									
			ISA -55	ISA -40	ISA -30	ISA -20	ISA -10	ISA	ISA +10	ISA +20	ISA +30	ISA +40
SL	15.0	GR	910	1001	1064	1128	1193	1260	1328	1397	1632	2072
		D50	1303	1424	1506	1591	1677	1764	1853	1944	2281	2932
2000	11.0	GR	991	1092	1162	1233	1306	1380	1455	1532	1841	2333
		D50	1410	1544	1635	1729	1824	1921	2020	2121	2566	3298
4000	7.1	GR	1081	1193	1271	1350	1430	1513	1597	1682	2095	2668
		D50	1528	1676	1778	1882	1988	2096	2206	2318	2915	3773
6000	3.1	GR	1180	1305	1391	1479	1569	1661	1754	1935	2395	3048
		D50	1659	1823	1936	2051	2169	2290	2413	2662	3331	4317
8000	-0.8	GR	1289	1429	1525	1623	1723	1826	1930	2231	2753	3498
		D50	1803	1986	2112	2240	2372	2506	2643	3068	3831	4970
10000	-4.8	GR	1439	1598	1708	1819	1934	2051	2270	2618	3237	4122
		D50	2002	2210	2354	2500	2650	2803	3106	3599	4513	5885

SECTION 7

DESCRIPTION

TABLE OF CONTENTS

7.1 GENERAL 5
7.2 AIRFRAME 5
7.2.1 WINGS 5
7.2.2 BELLY PANELS 6
7.2.3 AILERONS 6
7.2.4 FLAPS 6
7.2.5 EMPENNAGE 6
7.2.6 WINDSHIELD AND WINDOWS 6
7.3 FURNISHINGS 7
7.3.1 INSTRUMENT PANEL 7
7.3.2 GLARE SHIELD 17
7.3.3 DOOR 18
7.3.4 DOOR SEAL SYSTEM 18
7.3.5 EMERGENCY EXIT 19
7.3.6 SEATS, BELTS, AND HARNESSES 20
7.3.7 CREW CALL BUTTONS 23
7.4 FLIGHT CONTROLS 24
7.4.1 AILERONS 25
7.4.2 ELEVATOR 27
7.4.3 RUDDER 29
7.4.4 TRIM OVERRIDE 31
7.4.5 FLAPS 31
7.5 FUEL SYSTEM 36
7.5.1 FUEL TANKS 37
7.5.2 FUEL SELECTOR AND SHUTOFF VALVE 37
7.5.3 FUEL FILTER 38
7.5.4 ENGINE-START FUEL PURGE SYSTEM 38
7.5.5 ENGINE-SHUTDOWN FUEL PURGE SYSTEM 38

7.6 LANDING GEAR 40
7.6.1 WHEELS 42
7.6.2 BRAKES 43
7.6.3 WEIGHT ON WHEELS SWITCH 45
7.6.4 HYDRAULIC SYSTEM 46
7.6.5 EMERGENCY EXTENSION SYSTEM 48
7.6.6 LANDING GEAR CONTROL 48
7.6.7 LANDING GEAR POSITION INDICATION 49
7.7 POWERPLANT 50
7.7.1 ENGINE CONTROLS 50
7.7.2 ENGINE INDICATING 53
7.7.3 ENGINE FUEL 53
7.7.4 ENGINE OIL 54
7.7.5 TORQUE LIMITER 55
7.7.6 ENGINE START 55
7.7.7 IGNITION 56
7.7.8 ENGINE AIRFLOW AND COMBUSTION 56
7.7.9 AIR INDUCTION 57
7.7.10 ENGINE ACCESSORIES 57
7.8 PROPELLER 58
7.9 ELECTRICAL SYSTEM 58
7.9.1 POWER SOURCES 60
7.9.2 POWER DISTRIBUTION 63
7.10 LIGHTING 69
7.10.1 EXTERIOR LIGHTING 69
7.10.2 INTERIOR LIGHTING 70
7.11 ENVIRONMENTAL CONTROL SYSTEM 72
7.11.1 TEMPERATURE-CONTROLLED BLEED AIR SYSTEM 74
7.11.2 CABIN PRESSURIZATION 76
7.11.3 AIR CONDITIONING 77
7.11.4 GROUND FRESH AIR 77
7.12 OXYGEN SYSTEM 77
7.13 PITOT/STATIC SYSTEM 79

7.3.5 EMERGENCY EXIT

An emergency exit is located directly across from the cabin door. This exit completely disengages from the airplane when opened.

The emergency exit may be locked when the airplane is parked on the ground using the Emergency Exit Locking Pin inserted into a placarded hole on the cabin side of the exit. This pin is placarded with a "Remove Before Flight" tag.

CAUTION

THE EMERGENCY EXIT LOCKING PIN MUST BE REMOVED BEFORE FLIGHT SO THE EXIT CAN BE OPENED IN AN EMERGENCY.

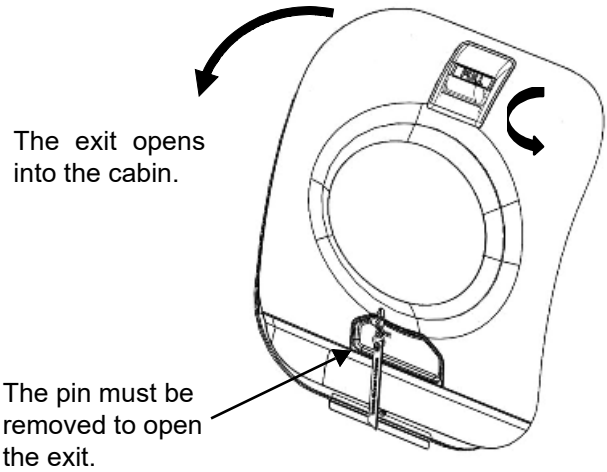

INSIDE THE AIRPLANE

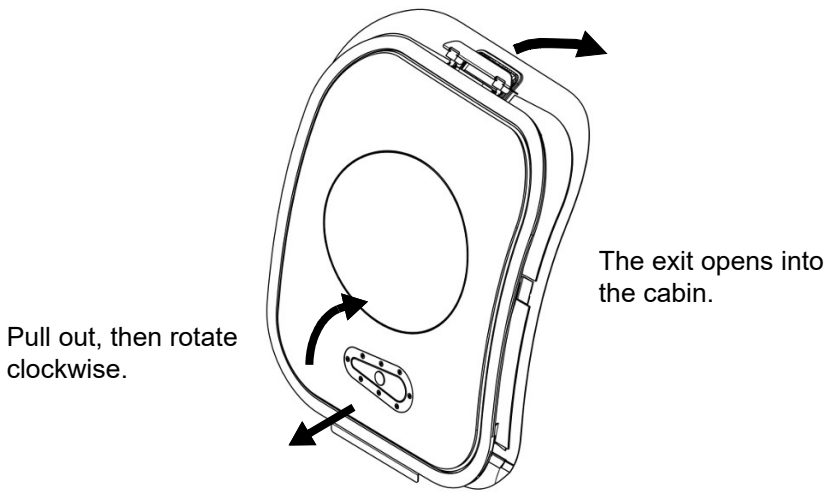

OUTSIDE THE AIRPLANE

7.3.6 SEATS, BELTS, AND HARNESSES

7.3.6.1 CREW SEATS

This airplane has two crew seats, pilot and copilot. A passenger may occupy the copilot seat.

The pilot and copilot seats are mounted to rails attached to the spar saddle of the fuselage. Longitudinal position, seat height, lumbar support, seat back tilt, and the headrests are adjustable.

Longitudinal position of the seats is controlled by pulling upwards on the lever bar under the front of the seat to unlock the pins then sliding the seat to the desired position. Release the lever bar then move the seat back and forth slightly while pressing down on the lever bar to make sure the locking pins engage the seat rails.

Seat height is controlled by rotating the hand wheel on the inboard forward side of the seat. A folding handle on the wheel can be extended for ease of operation.

Seat back tilt is controlled by rotating upwards on the lever on the inboard aft side of the seat then tilting the seat back to the desired position. Releasing the lever locks the seat back in place.

Lumbar support is controlled by rotating the hand wheel on the outboard lower side of the seat back.

The waist straps of the harnesses are adjusted by pulling on the free end of the strap to tighten, and lifting the metal tab to loosen.

The headrests height may be adjusted by pulling upwards or pushing downwards to set their supports into the desired detents.

The armrests may be raised for ease of access to the seats and for comfort.

The proper method to use the 4 point restraint system is:

1. Attach the lap belt connectors to the rotary buckle and then tighten the lap belts to be low and tight about the occupant’s pelvis.
2. Attach the torso harness connectors to the rotary buckle and adjust the torso harness to be snug (but not excessively tight) to the occupant's torso.

7.3.6.2 CREW EYE REFERENCE HEIGHT

Crew Seats should be adjusted for correct Eye Reference Height. Set crew seat height such that the top glare shield surface is visible while maintaining visibility to all instruments and annunciations.

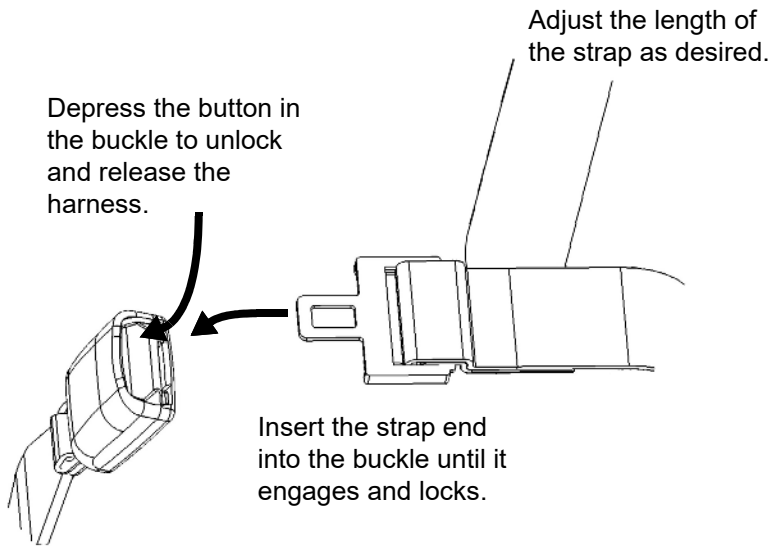

7.3.7 CREW CALL BUTTONS

Cabin crew call buttons are placed at each trim panel in the passenger compartment. They can be pressed for assistance or in case of emergency.

When a Crew Call button is pressed, blue CREW CALL annunciations are illuminated in the Wedge annunciation panels. These annunciations can be cleared by pressing the Alerts softkey on the pilot or co-pilot PFD.

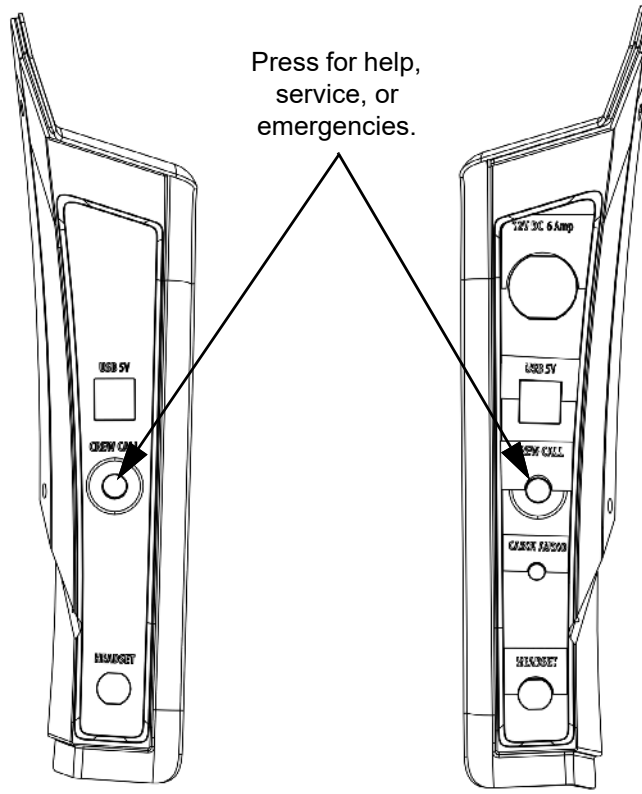

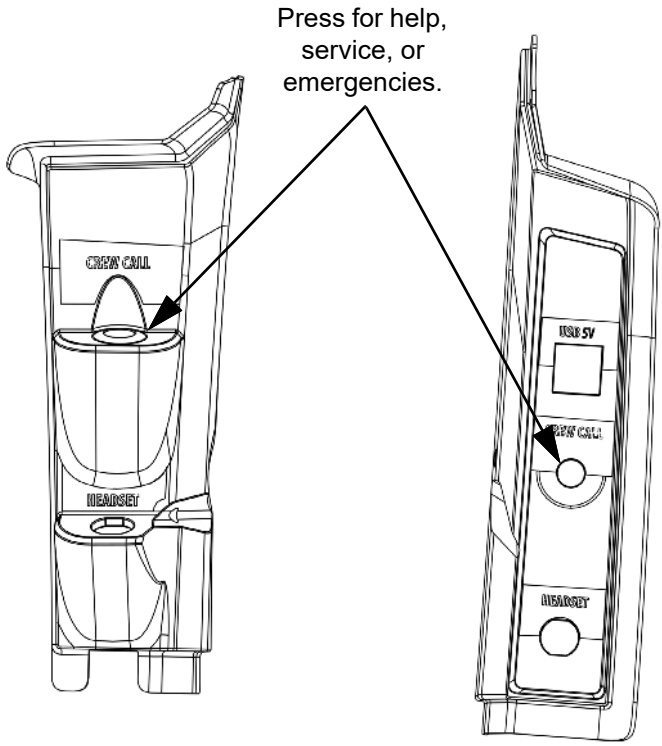

7.4 FLIGHT CONTROLS

The primary flight controls for this airplane are the ailerons, rudder, and elevator. They are controlled from either front seat using standard yoke style controls and rudder pedals.

Rudder pedals control the rudder as well as nose wheel steering and differential braking (disc brakes are installed on each of the main wheels). A linkage attaching the rudder pedals to the nose gear allows steering during taxing. The nose wheel decouples from the steering mechanism when the wheel is deflected greater than 16° ± 5° to either the right or the left. Each rudder pedal is attached to the braking system which also allows steering of the airplane during taxiing using differential braking.

Electric servos are used to provide fine trim secondary flight control on the trailing edges of the LH aileron, the elevator, and the rudder.

The high lift flight controls for this airplane are the electrically actuated double slotted flaps.

7.4.1 AILERONS

Aileron deflection up is 20°. Aileron deflection down is 15.5°. Aileron trim tab deflection up or down is 17°.

Aileron trim is controlled by a toggle switch on the control yoke. Position of the trim tab is indicated by a cyan marker in the MFD EIS display.

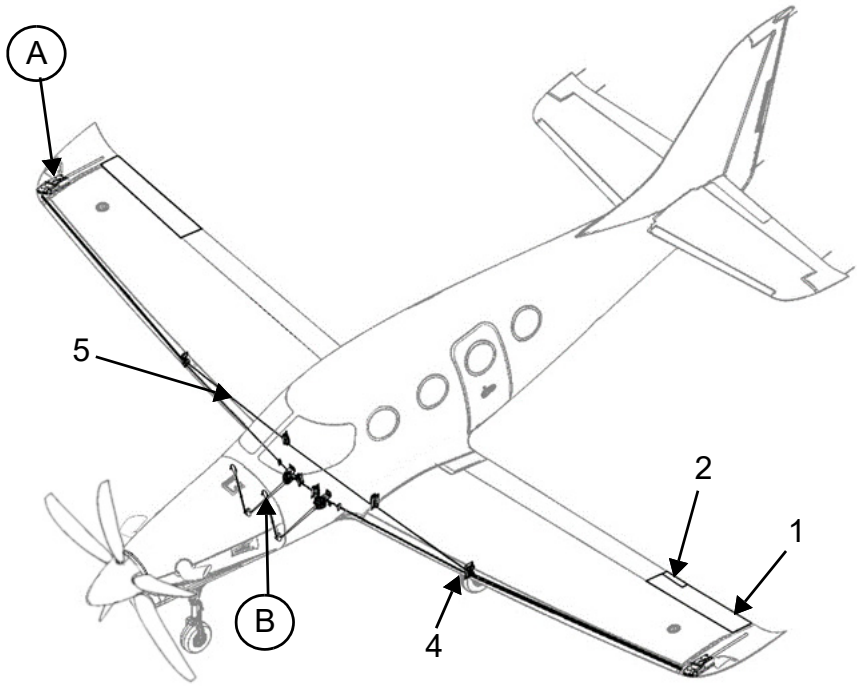

LEGEND

1. Aileron
2. Trim Tab
3. Bellcrank
4. Pulley
5. Cable
6. Yoke

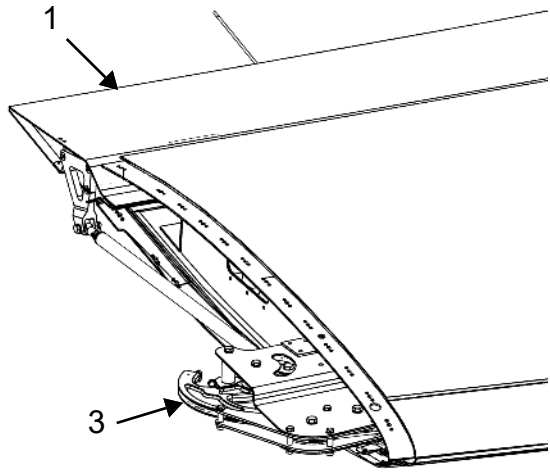

DETAIL (A)

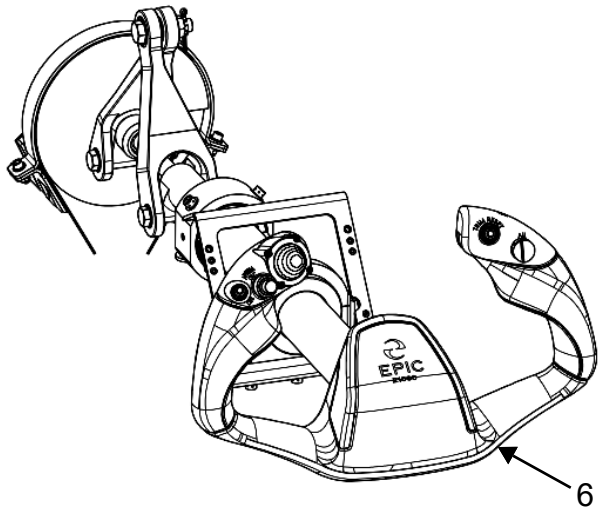

DETAIL (B)

7.4.2 ELEVATOR

Elevator deflection up is 25.6°. Elevator deflection down is 13.5°. Elevator trim tab deflection up is 7.5°. Elevator trim tab deflection down is 19.5°.

Elevator trim is controlled using the elevator/rudder trim hat switch on the control yoke. Position of the trim tab is indicated by a cyan marker in the MFD EIS display.

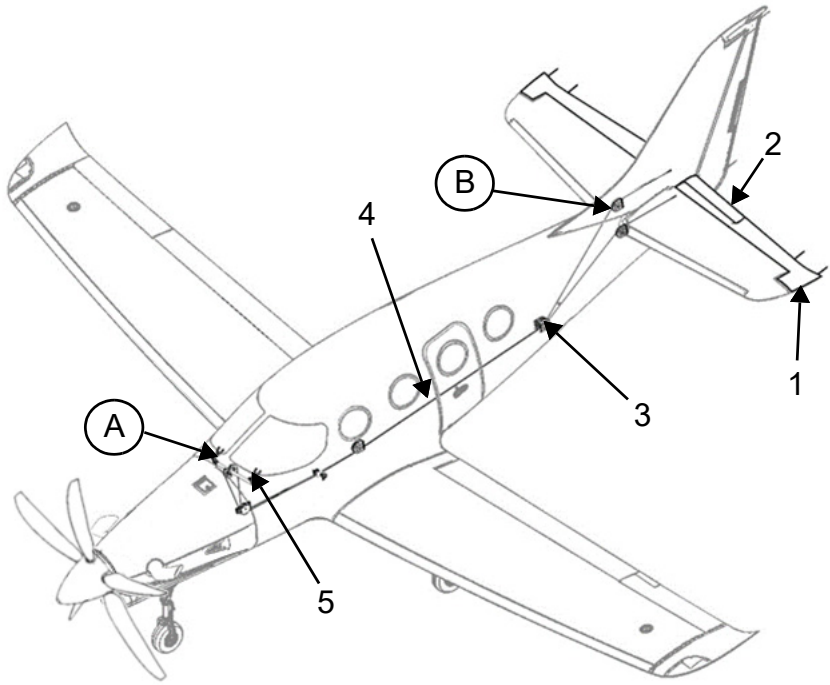

LEGEND

1. Elevator
2. Trim Tab
3. Pulley
4. Cable
5. Torque Tube

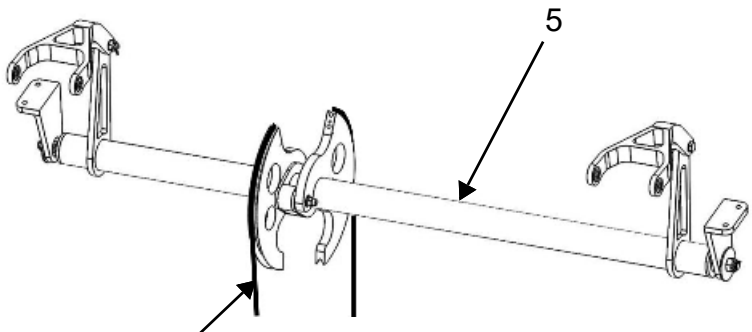

DETAIL (A)

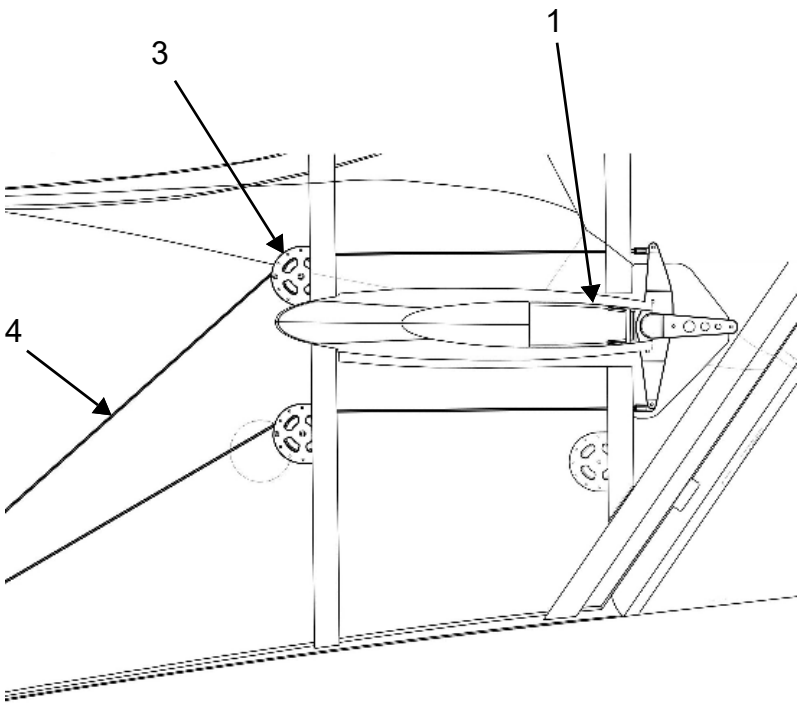

DETAIL (B)

7.4.3 RUDDER

The rudder travels 18.75° to the right from neutral and 18.5° to left except when the airplane is airborne and the engine is at 20% torque or greater. Under these conditions the rudder is limited to the left and not additionally limited to the right. Rudder trim tab deflection left is 20°. Rudder trim tab deflection right is 5°.

The rudder limiter is a solenoid powered rod that limits left rudder travel by restricting the travel of the rudder bellcrank. When the airplane is airborne (Weight on Wheels switch closed) and the engine is at 20% torque or greater, rudder travel is limited to 6° to the left and unrestricted to the right. If the rudder limiter is determined not to be in the correct positions, the **RUD LIM FAIL** Warning will be displayed.

Rudder trim is controlled using the elevator/rudder trim hat switch on the control yoke. The position of the trim tab is indicated by a cyan marker in the MFD EIS display.

NOTE

Check full rudder travel only with the nose steering link decoupled.

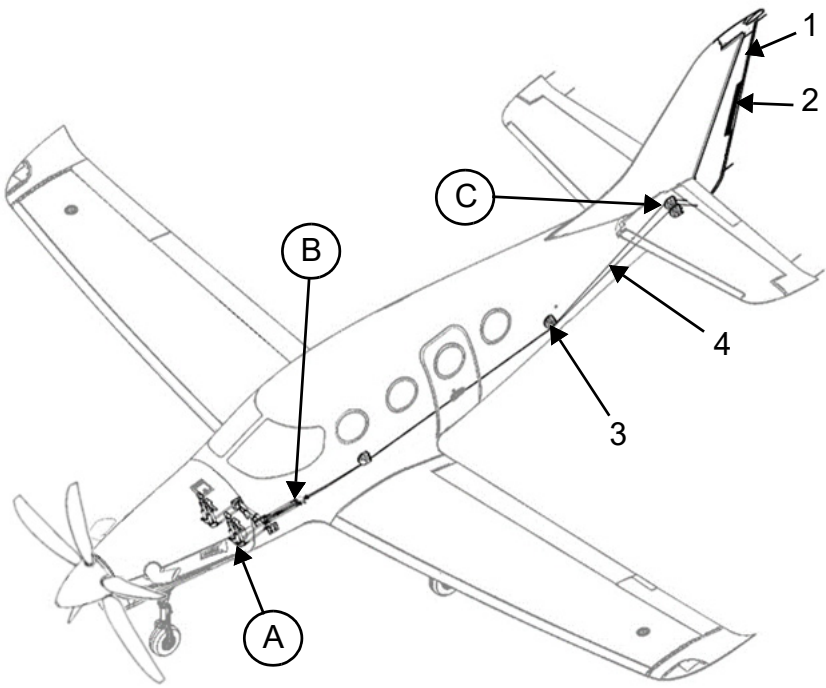

LEGEND

1. Rudder
2. Trim Tab
3. Pulley
4. Cable
5. Bellcrank
6. Rudder Pedals

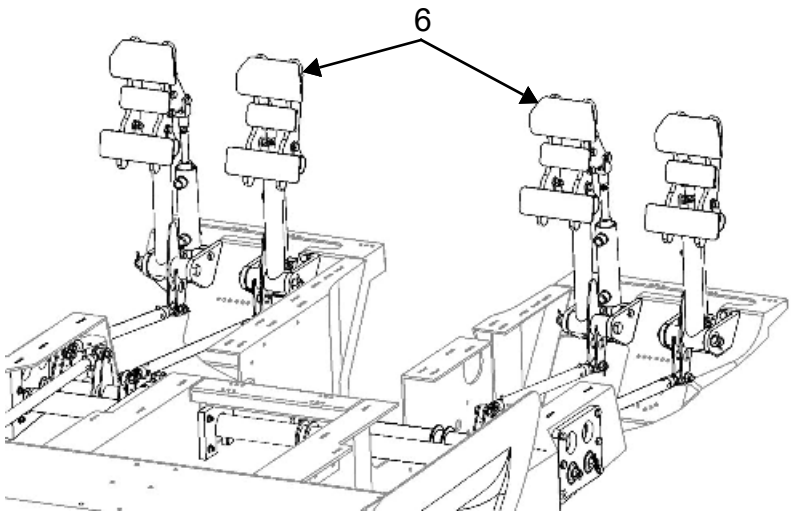

DETAIL (A)

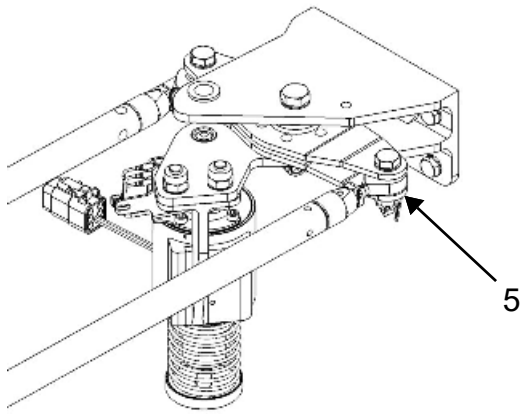

DETAIL (B)

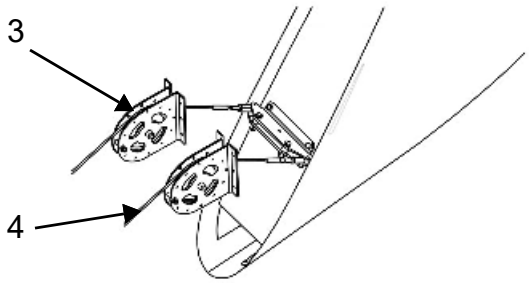

DETAIL (C)

7.4.4 TRIM OVERRIDE

In the event of a trim system malfunction, a trim override relay can be activated with the AP/TRIM DISC switch to disable the trim system. Two methods are available: Trim Interrupt or Trim Disconnect.

Trim Interrupt is engaged immediately upon a quick press and release of the AP/TRIM DISC switch. This energizes the trim override relay and in turn interrupts the trim actuator circuit.

Trim Disconnect is engaged by pressing and holding the AP/TRIM DISC switch for more than 1.25 seconds. This activates the Trim Disconnect latch integrated into the G1000 NXi system software. The Trim Disconnect latch keeps the trim override relay energized thereby disconnecting the trim actuator circuit. To re-enable the trim system, press and release the TRIM RESET switch on the pilot control yoke.

7.4.5 FLAPS

The flaps are positioned by a linear actuator driven by an electric motor that rotates the flap torque tube, which in turn extends or retracts control rods connected to the flaps. Three micro-switches mounted on the linear actuator stop the motor to position the flaps at the desired position for cruise, takeoff, and landing [UP (0°), T/O (12°), and FULL (43°)]. If the flaps remain between the limit switches for more than 20 seconds, the **FLAPS FAIL** Caution will be displayed. A fourth micro-switch removes power to the flap motor in the event the FULL limit switch fails to prevent over-travel of the flaps.

The Flap control is located in the airplane control panel to the right of the Garmin GCU 477 Flight Management System Controller. The control is a three position (UP, T/O, and FULL) electric selector switch that activates the flap motor to either extend or retract the flaps to the desired position.

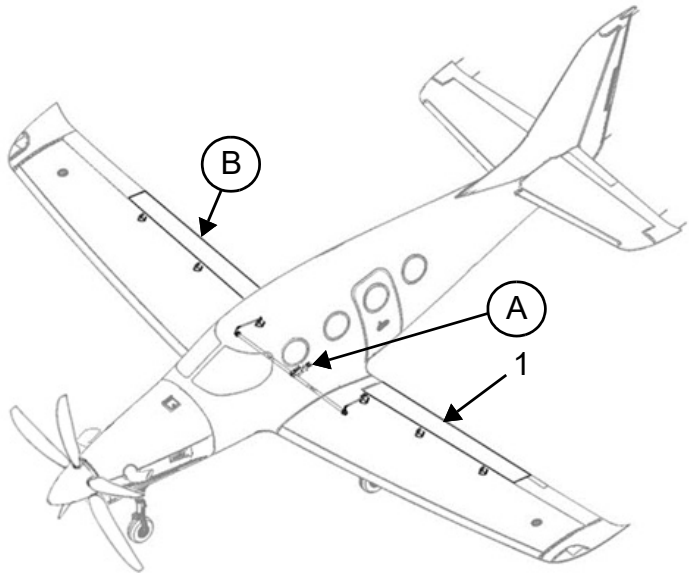

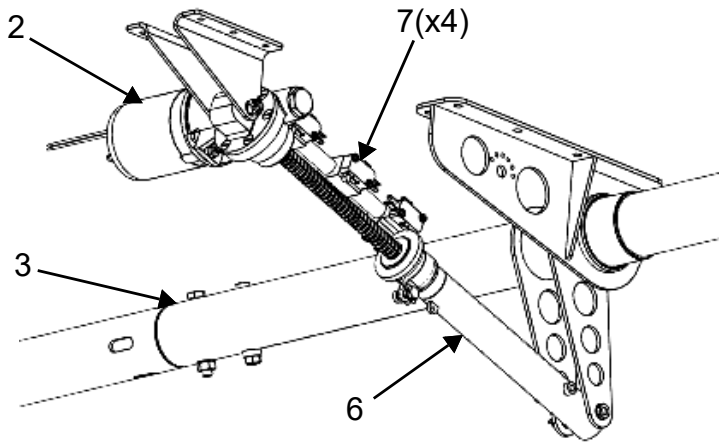

DETAIL (A)

LEGEND

1. Flap
2. Flap Motor
3. Torque Tube
4. Push Rod
5. Hinge
6. Flap Actuator
7. Flap Limit Switch

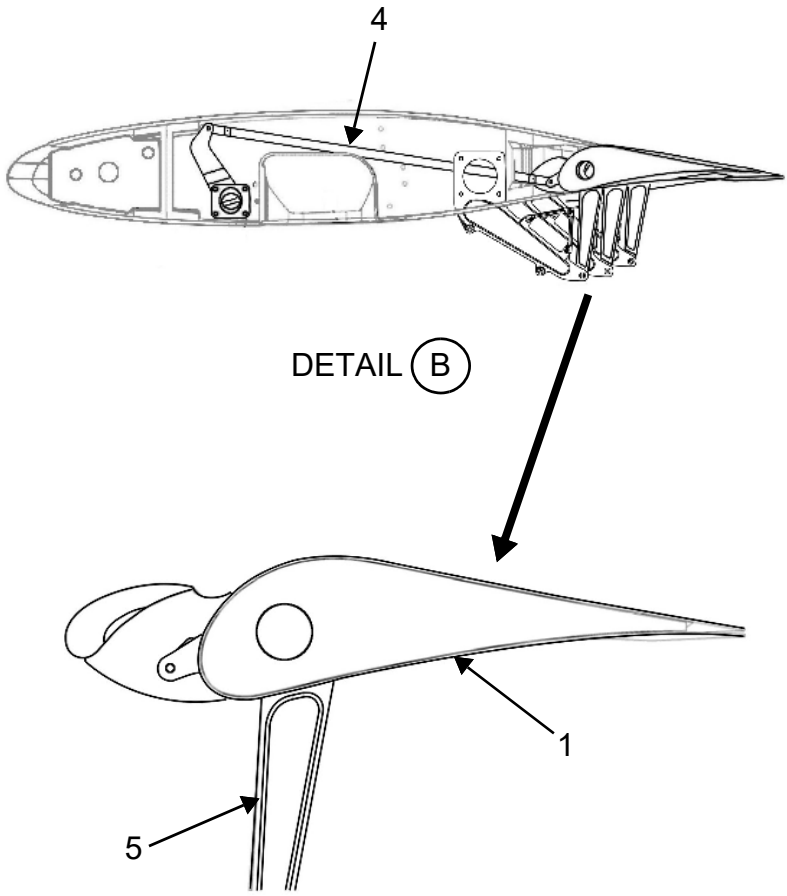
4
DETAIL B
1
5

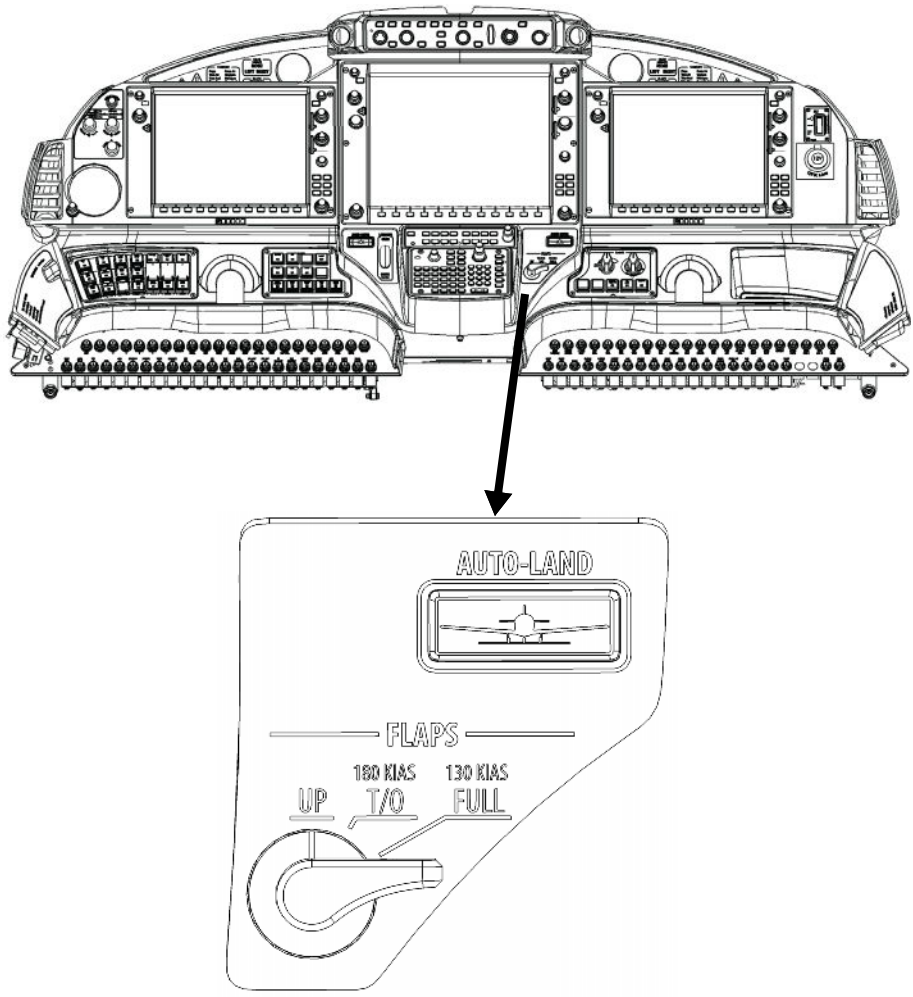

7.4.5.1 FLAP POSITION INDICATION

The primary flap position indication is in the MFD EIS display. Listed within a white outlined box are the words UP, T/O, FULL and TRNS. When the flaps are at any particular position, the indication will display in white with all others being gray. When the flaps position is changed, the TRNS indication will display in yellow until the flaps have moved to the selected position (UP, T/O or FULL) which will change in color from gray to white.

Secondary flap indications (T/O, FULL, and TRANSITION) illuminate on the Wedge annunciation panels depending on the position of the flaps. Flaps in the T/O and FULL positions will be annunciated accordingly. Flaps between positions will be annunciated in TRANSITION. The entire Flaps annunciator will remain dark when the flaps are UP.

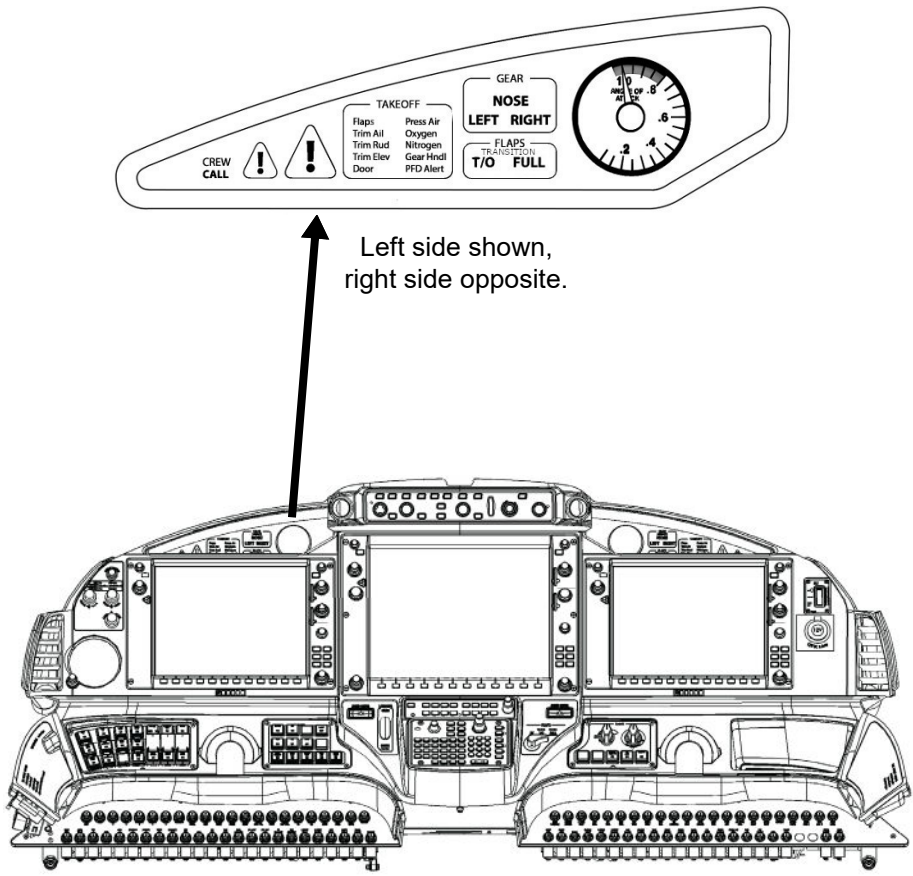
CREW
CALL
TAKEOFF
Flaps
Trim Ail
Trim Rud
Trim Elev
Door
Press Air
Oxygen
Nitrogen
Gear Hndl
PFD Alert
GEAR
NOSE
LEFT RIGHT
FLAPS
TRANSITION
T/O FULL
Left side shown,
right side opposite.

7.5 FUEL SYSTEM

The fuel system for the airplane is composed of two wet wing fuel tanks, two electric boost pumps, fuel sumps, a fuel selector and shutoff valve, a fuel filter, hoses, lines, fittings, and (integral to the engine) an oil-to-fuel heat exchanger and engine-driven high-pressure fuel pump.

Refueling is accomplished using over-wing filler caps. Fuel quantity, fuel flow rate, and fuel pressure are shown in the MFD EIS display. Low fuel pressure, low fuel quantity, and fault conditions will be shown as Crew Alerting System (CAS) messages.

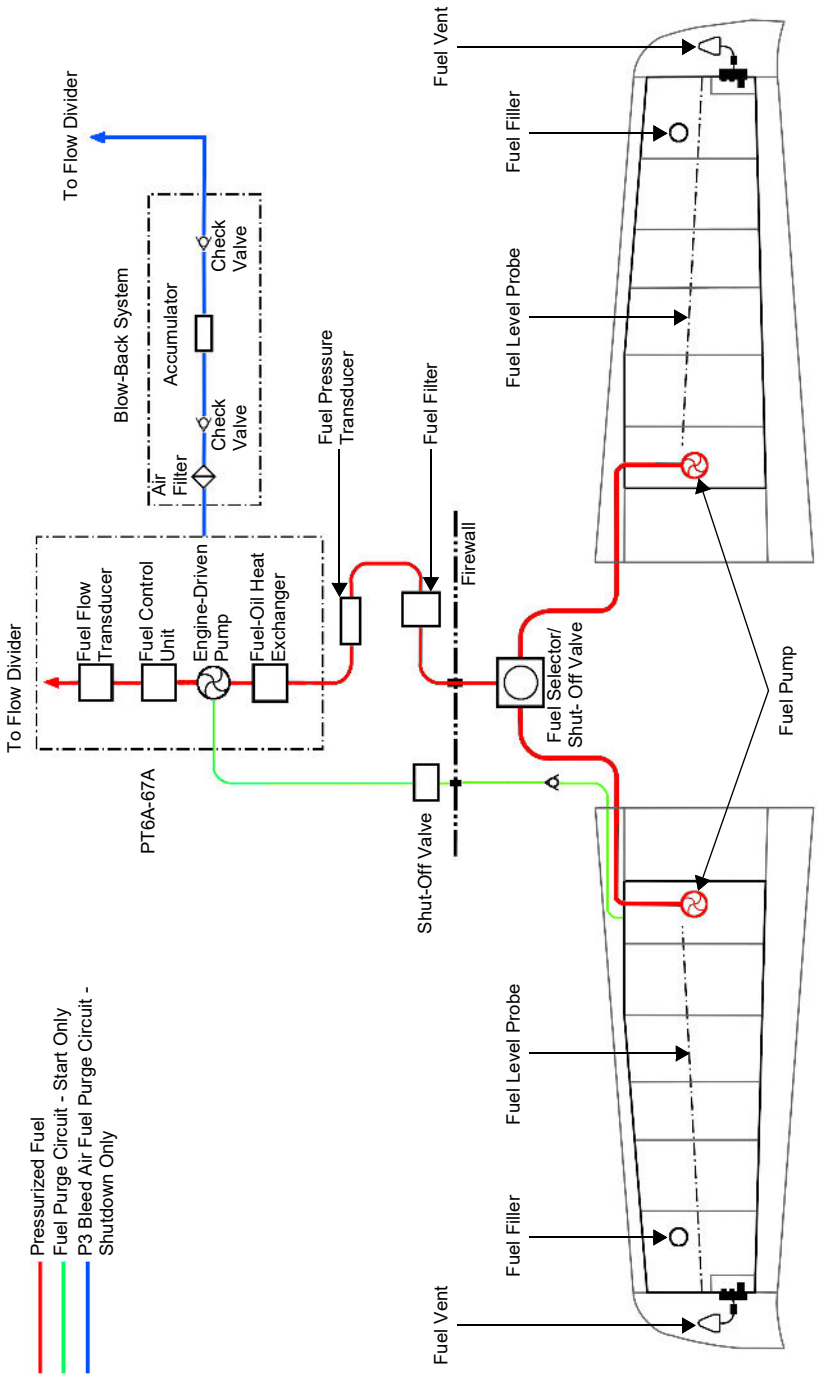

7.5.1 FUEL TANKS

Six bays in each wing hold approximately 139 US gallons (526.2 liters) of fuel capacity for a total of 278 US gallons (1052.3 liters). The inboard fuel bay is equipped with flapper valves. An electric boost pump in each wing provides fuel to the fuel selector. Capacitance probes in each wing provide fuel quantity information.

NOTE

Usable fuel amount is 264 US gal (999.3 L).

Unusable fuel amount is 6.7 US gal (25.4 L) per wing for a total of 13.4 US gal (50.8 L).

A fuel venting system at each wing tip protects the wings by ensuring the fuel tanks neither pressurize nor pull a vacuum. The fuel vent system incorporates a NACA vent, flame arrestor, positive and vacuum pressure relief valves, and a float valve.

If the left or right fuel indicator drops below 15 US gal (56.8 L), the **L FUEL LOW** or **R FUEL LOW** Cautions will be displayed, respectively. If a fuel imbalance of more than 20 gallons is indicated, the **FUEL IMBALANCE** Caution will be displayed.

7.5.1.1 FUEL BOOST PUMPS

The continuous-duty, in-wing submerged fuel boost pumps provide positive fuel pressure from the fuel tanks through the fuel selector and fuel filter to the high-pressure engine-driven fuel pump. They are operated with the L/R FUEL PUMP switches in the PRE-START switch panel.

When the left or right FUEL PUMP Switch is off, the **L FUEL PUMP OFF** or **R FUEL PUMP OFF** Caution will be displayed, respectively.

7.5.1.2 FUEL SAMPLING

There is a fuel sampling valve on the underside of each wing. Fuel drained into a sampling cup at these points will show if water or sediment is present in the fuel. If water or sediment is found in the fuel sample, fuel should continue to be drained until no more water or sediment is evident.

7.5.2 FUEL SELECTOR AND SHUTOFF VALVE

The fuel selector acts to select which tank is providing fuel to the engine, and also acts as a shutoff valve. When the fuel selector control lever is set to the LEFT or RIGHT position, fuel will flow to the fuel filter from the selected tank. In an emergency, fuel flow can be stopped by pushing down on the control lever and turning it, either clockwise or counterclockwise, past the gate until it pops up in the OFF range. Any position in the OFF range will shut off fuel flow. Fuel flow can be restored by pushing down on the fuel selector control lever and turning it to the LEFT or RIGHT position.

WARNING

POSITIONING THE FUEL SELECTOR CONTROL LEVER BETWEEN THE LEFT AND RIGHT POSITIONS MAY CAUSE OVER-PRESSURIZATION OF A FUEL TANK AND SUBSEQUENT DAMAGE TO THE WING.

7.5.2.1 FUEL AUTO-SELECTOR

The fuel selector is equipped with an automatic selection mechanism that switches between the left and right fuel tanks every 2 minutes to balance the flow of fuel from each tank.

The fuel auto-selector is turned on and off with the FUEL AUTO SEL switch on the PRE-TAXI switch panel. When the FUEL AUTO SEL switch is OFF, **AUTO FUEL OFF** caution will be displayed.

The position of the fuel selector is monitored during fuel auto-selection. If the fuel auto-selector detects a failure to correctly reposition the fuel selector, the **AUTO FUEL FAIL** caution will be displayed.

7.5.3 FUEL FILTER

The fuel filter is located between the fuel selector and the engine's oil-to-fuel heat exchanger. It is mounted on the forward side of the firewall at the lower right corner. The fuel filter consists of filter disks, a drain port, a differential pressure indicator, and a bypass valve.

If the fuel filter becomes clogged or blocked, the bypass valve opens to allow unfiltered fuel to the engine. This will cause the differential pressure indicator to send a signal to the flight deck that will in turn display the **FUEL FILT BLOCK** caution.

7.5.4 ENGINE-START FUEL PURGE SYSTEM

The PT6A-67A engine-driven high-pressure fuel pump is a gear type pump. Any residual air or vapor in the fuel system may prevent the pump from developing the pressure necessary to deliver fuel to the engine. To address this, excess fuel from the pump is vented during start in order to purge the fuel system of any air or vapor that could be trapped in the system.

The starter/generator circuitry controls a normally open solenoid valve to vent excess fuel during the start sequence. The valve remains open when the starter/generator is in start mode and closes when the starter/generator exits start mode. The valve is mounted on the lower engine mount near the fuel filter.

The fuel purge line returns fuel to the left fuel tank.

7.5.5 ENGINE-SHUTDOWN FUEL PURGE SYSTEM

During engine shutdown excess fuel from the fuel nozzle manifold collects in the fuel flow divider. Per U. S. Environmental Protection Agency (EPA) rules, this fuel must be disposed of and may not just be dumped overboard of the airplane. This airplane uses a pressurized bleed air accumulator to dispose of the excess fuel.

The fuel purge system passes P3 bleed air through an air filter and check valve before using it to charge an accumulator. Downstream of the accumulator, another check valve is plumbed enroute to the fuel flow divider on the engine.

During engine shutdown, fuel inlet pressure to the fuel flow divider will drop below the accumulator pressure resulting in the opening of the downstream check valve. This allows the residual fuel in the manifold to be blown into the combustion chamber where it is burned.

7.6 LANDING GEAR

This airplane has hydraulically actuated retractable main and nose gear in a tricycle configuration. Taxiing, takeoff, and landing forces are absorbed using hydro-pneumatic dampers on each trailing link main gear and a hydro-pneumatic strut on the nose gear.

The nose gear is coupled to the rudder pedals for steering of up to 15 degrees to each side of the centerline of the airplane. Beyond 15 degrees the steering mechanism decouples and the airplane can be steered up to 60 degrees to each side of the centerline of the airplane using the application of differential braking to the main gear wheels. The disc brakes on the main wheels are activated by individual master cylinders mounted to the left and right rudder pedals of both the pilot and copilot.

NOTE

The landing gear may not fully retract into the uplocks with a load factor in excess of 1.4.

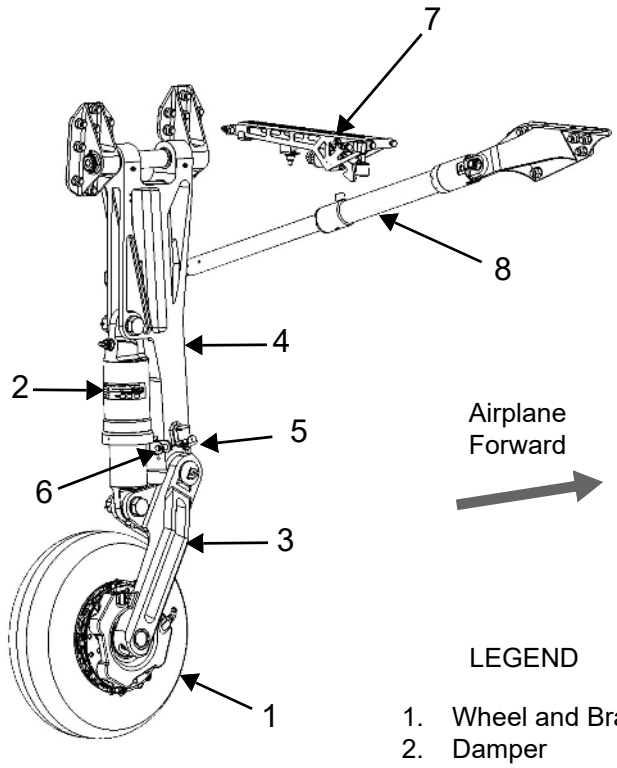

Main Landing Gear
Left shown, right opposite.

LEGEND

1. Wheel and Brake
2. Damper
3. Trailing Link
4. Bracket Assembly
5. Weight on Wheels Switch
6. Uplock Bracket
7. Uplock
8. Actuator

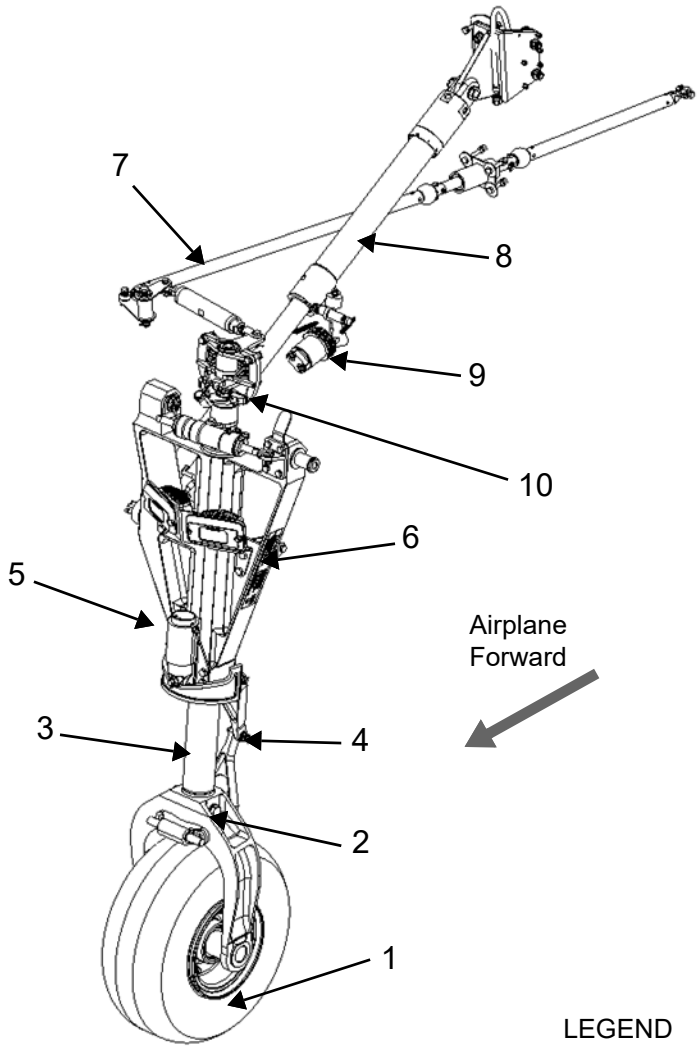

Nose Landing Gear

LEGEND

1. Wheel
2. Fork
3. Strut Piston
4. Scissor Link
5. Centering Spring
6. Uplock Bracket
7. Steering Linkage
8. Actuator
9. Uplock
10. Steering Kickout Assembly

7.6.1 WHEELS

This airplane is equipped with a 6.00 x 6 nose wheel and two 18 x 5.5 main wheels. Both types of wheels are made of forged aluminum alloy and use 10-ply tubeless tires. Each wheel has two rim halves, two bearing cups, two bearing cones, two snap rings, and grease seals. The wheel halves are mated using bolts, washers, and nuts.

Inflation and servicing of the tires to the following pressures using nitrogen is recommended.

Nose Wheel Tire: ..... 65 to 70 psi (448.2 to 482.63 kPa)
Main Gear Tire: ..... 103 to 108 psi (710.16 to 744.6 kPa)

NOTE

Consider load factor and ambient temperature when checking tire pressure. Air pressure in the tire will increase when the tire is subjected to loads and when temperature increases.

7.6.2 BRAKES

The brake system consists of a brake fluid reservoir, the Automated Braking (auto-brake) master cylinder, four rudder-pedal master cylinders, and two 8" six-cylinder metallic-lining brake assemblies. The brake system is used to stop the airplane and provide steering by differential braking. If the pilot and copilot simultaneously apply pressure to the same side brake pedal, the one applying the greatest pressure will control the braking.

The brake system is separate and independent from the landing gear hydraulic system. The brake fluid reservoir is mounted on the upper left of the firewall.

Brake fluid flows from the brake fluid reservoir, through the auto-brake master cylinder, to the left and right copilot-side master cylinders mounted on toe-pedals attached to the copilot rudder pedal assemblies. The fluid then flows from the left and right copilot-side master cylinders to the respective pilot-side master cylinders. From there, brake fluid flows to the respective brake assemblies mounted on the main landing gear. There is no brake anti-lock system.

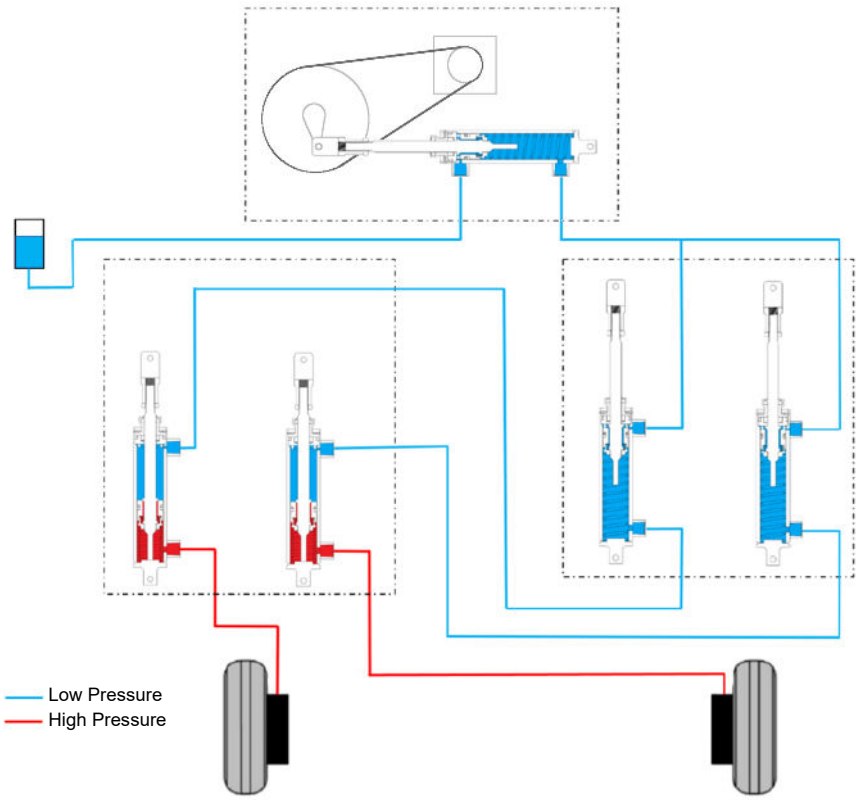

Shown with Pilot’s brakes applied.

7.6.2.1 AUTOMATED BRAKING

The Automated Braking system uses a servo to actuate a single master cylinder to apply pressure to both main wheel brakes evenly. The servo is powered through the 5A AUTO BRAKE circuit breaker on the ACC1 bus, located on the right circuit breaker panel.

Automated Braking provides a Brake Hold function to allow pilots to exit the airplane when the engine is not running and place or remove wheel chocks, to prevent inadvertent airplane movement during pre- and post-taxi operations. Brake Hold is controlled by the BRAKE HOLD switch located on the left switch panel and Brake Hold can only be activated when the airplane is on the ground and stationary. Wheel speed sensors and GPS groundspeed inputs prevent activation if the airplane is in motion on the ground. Brake Hold will automatically release when power is turned off.

The Brake Hold system has the following CAS messages:

BRAKE HOLD	(Advisory): Brake Hold system is activated.
BRAKE HOLD	(Caution): Brake Hold system is activated and engine power is above 75% N_G.
BRAKE HOLD	(Warning): Brake Hold system is activated and engine is above 55% torque.
BRAKE HLD DSBLD	(Caution): Brake Hold system is not available because the airplane is in motion.

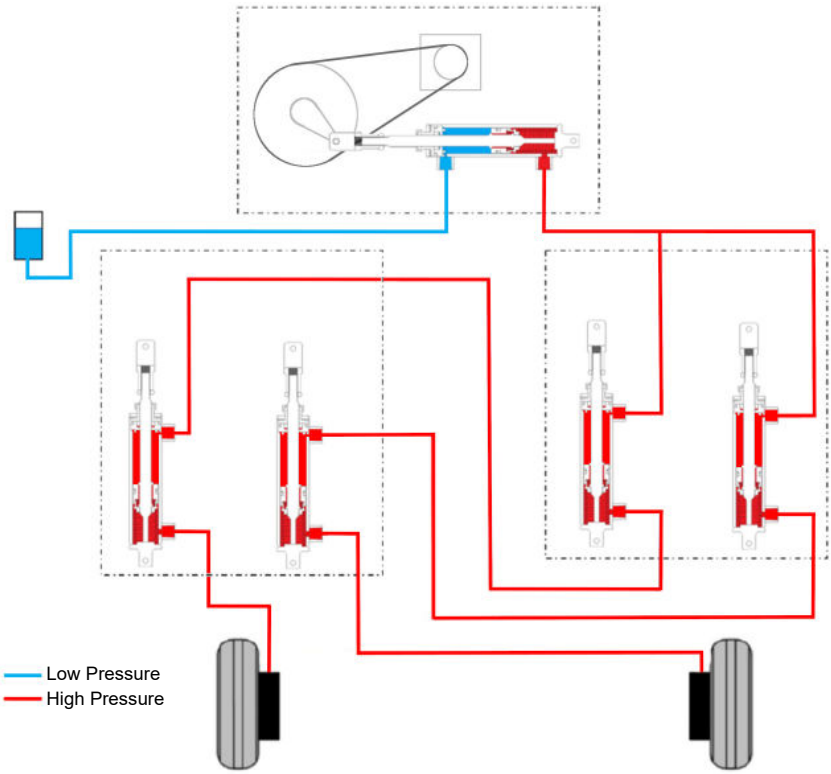

Shown with Brake Hold engaged.

7.6.3 WEIGHT ON WHEELS SWITCH

Left WOW Switch

Cabin Pressurization Controller	No pressurization schedule on the ground, i.e. cabin will not pressurize.
Left Lift Computer	The Pilot Actuated Test (PAT) works only when the airplane is on the ground. Activation of the shaker and pusher based on AOA is disabled on the ground.
Pitot/Stall Heat	Heater elements in the pitot tubes and stall vanes operate at half the in-flight power output when the airplane is on the ground.

Right WOW Switch

Automatic Engine Igniters	The igniters are automatically turned on when the airplane is airborne and the engine is at 20% torque or less.
Garmin Systems	Signal sent to Garmin systems to distinguish between ground vs. airborne operations.
Landing Gear	The landing gear will not retract when the airplane is on the ground.
Mass Flow Controller	Pressurization air flow is 1.5 pounds per minute on the ground, 5 pounds per minute airborne.
Right Lift Computer	The Pilot Actuated Test (PAT) works only when the airplane is on the ground. Activation of the shaker and pusher based on AOA is disabled on the ground.
Rudder Limiter	Rudder travel is limited when the airplane is airborne and the engine is at 20% torque or more.

7.6.4 HYDRAULIC SYSTEM

The hydraulic system powers the landing gear and up-lock actuators to extend and retract the landing gear. The hydraulic system consists of an engine-driven pump, accumulator, noise suppressor, high-pressure hydraulic valve assembly, reservoir, pressure switch, bypass solenoid, secondary bypass valve, landing gear actuators, and up-locks. Down-locks are integral to the landing gear actuators.

The engine-driven pump feeds hydraulic fluid through a suppressor (to reduce noise and vibration) to charge the accumulator. Pressurized fluid is then routed from the accumulator into the high-pressure hydraulic valve assembly. Engine bleed air is used to create positive pressure in the reservoir, ensuring adequate fluid flow to the hydraulic pump.

The hydraulic system operates in one of two modes: pressurizing or recirculation. In pressurizing mode, pump output pressurizes the system until a pressure switch opens a bypass solenoid, switching the system to recirculation mode. In recirculation mode, pump output recirculates through the bypass solenoid directly back to the reservoir. The bypass solenoid also opens during engine start to reduce drag on the starter. In the event of a bypass solenoid failure, the primary relief valve prevents over-pressurization. If the hydraulic system remains in pressurizing mode for an extended period, the **HYD PUMP** Caution will be displayed.

When the landing gear switch is engaged, fluid is released to the landing gear actuators through a solenoid valve. This causes a decrease in hydraulic pressure, which switches the hydraulic pump from recirculation to pressurizing mode, providing power to the actuators. The pump switches back to recirculation mode after the landing gear has locked in place (either up or down), and the system has again reached full pressurization.

NOTE

When the landing gear switch is in the UP position, the hydraulic pump will remain in pressurizing mode until both main landing gears indicate up-and-locked.

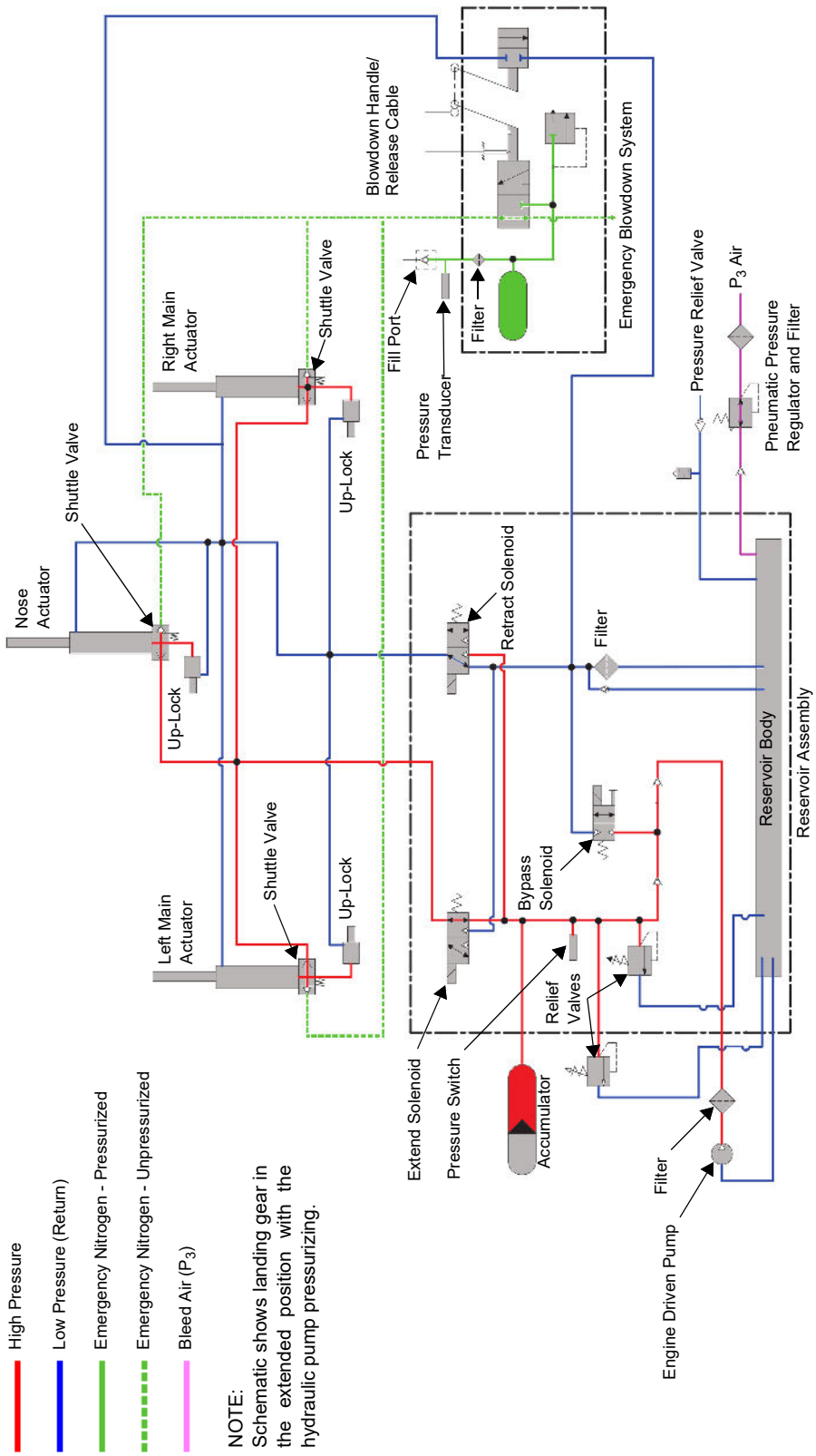
Blowdown Handle/
Release Cable
Emergency Blowdown System
Fill Port
Filter
Pressure
Transducer
Pressure Relief Valve
P_3 Air
Pneumatic Pressure
Regulator and Filter
Right Main
Actuator
Shuttle Valve
Up-Lock
Shuttle Valve
Nose
Actuator
Up-Lock
Retract Solenoid
Filter
Reservoir Body
Reservoir Assembly
Shuttle Valve
Up-Lock
Left Main
Actuator
Bypass
Solenoid
Relief
Valves
Extend Solenoid
Pressure Switch
Accumulator
Filter
Engine Driven Pump
High Pressure
Low Pressure (Return)
Emergency Nitrogen - Pressurized
Emergency Nitrogen - Unpressurized
Bleed Air (P_3)
NOTE:
Schematic shows landing gear in
the extended position with the
hydraulic pump pressurizing.

7.6.5 EMERGENCY EXTENSION SYSTEM

If the hydraulic system malfunctions, an emergency extension system is used to extend the landing gear.

The emergency extension system is actuated with the Emergency Gear Extension lever located within the underfloor compartment between the pilot and copilot seats. Pulling up on the lever first opens a valve to relieve pressure in the hydraulic system, preventing hydraulic lock. Then the lever opens the nitrogen discharge valve to pressurize the actuators.

Once pulled up fully, the lever locks into place until it is reset by maintenance personnel.

7.6.6 LANDING GEAR CONTROL

The Landing Gear Control is located in the airplane control panel to the left of the Garmin GCU 477 Flight Management System Controller. The control is an electric selector switch that activates the hydraulic system to either extend or retract the landing gear. Operation of the landing gear is performed by pulling out on the control lever then putting it in the desired "UP" or "DOWN" position.

NOTE

A weight on wheels switch on the right main landing gear prevents the gear from being retracted when the airplane is on the ground.

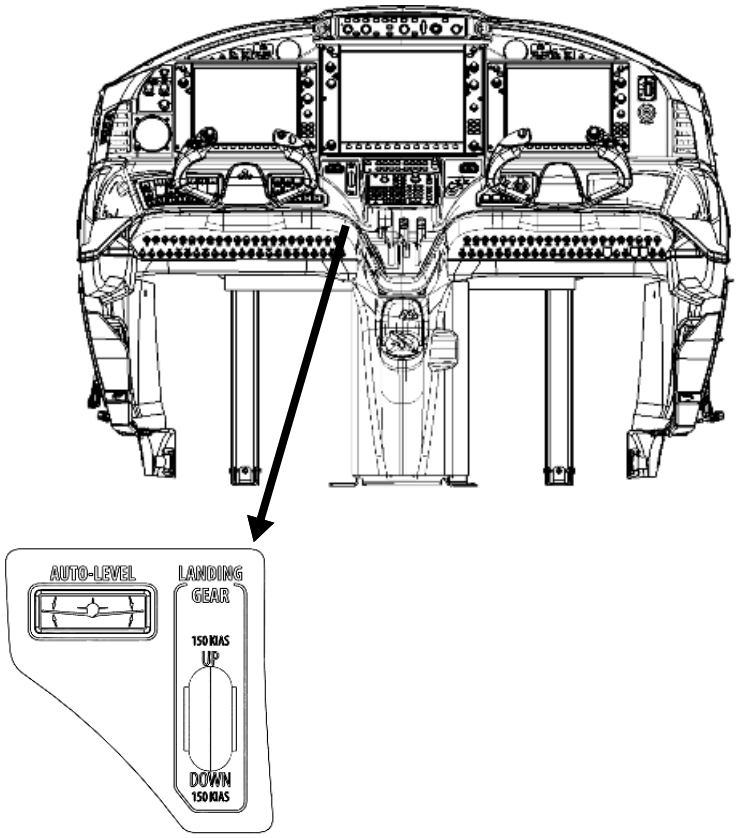

7.6.7 LANDING GEAR POSITION INDICATION

The primary landing gear position indication is in the MFD EIS display to the right of the “LG” label. When the gear is down and locked, three green circles surrounding the letters “DN” are displayed (one each for the left, right and nose gear). When the landing gear position is in transition the circles are gray. When the landing gear is up and locked three white circles surrounding the letters “UP” are displayed.



Secondary indication is shown on the Wedge annunciator panels. Three words (NOSE, LEFT, and RIGHT) illuminate depending on the condition of the landing gear:

Landing Gear Position Indicator

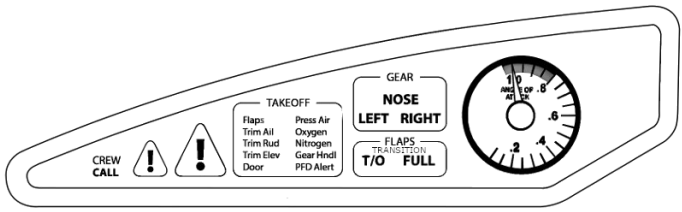

Pilot’s wedge shown, copilot’s opposite.

	Annunciation Color	
Gear Position	**Primary (MFD)**	**Secondary (Wedge)**
Up and Locked	White	Off
Transition	Gray	Red
Down and Locked	Green	Green

7.7 POWERPLANT

Propulsion and power for this airplane is provided by a Pratt & Whitney PT6A-67A turboprop engine, which has twin shafts with four axial and one centrifugal compressor stages, an annular combustion chamber, and a three stage turbine where one stage drives the compressor and two stages power the propeller.

This engine is rated to 1200 SHP (Shaft Horsepower) at takeoff power, developing a total power output of 1272 ESHP (Equivalent Shaft Horsepower).

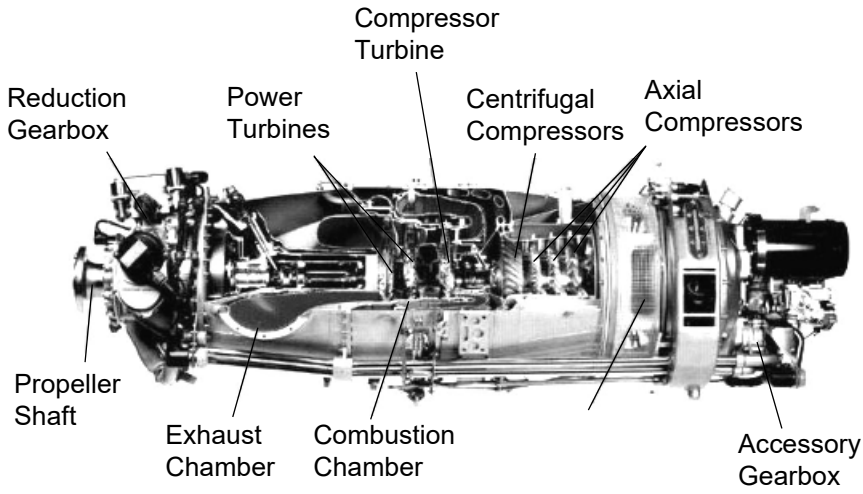

7.7.1 ENGINE CONTROLS

The engine and the propeller are controlled using four levers located below and aft of the instrument panel centered between the pilot and copilot.

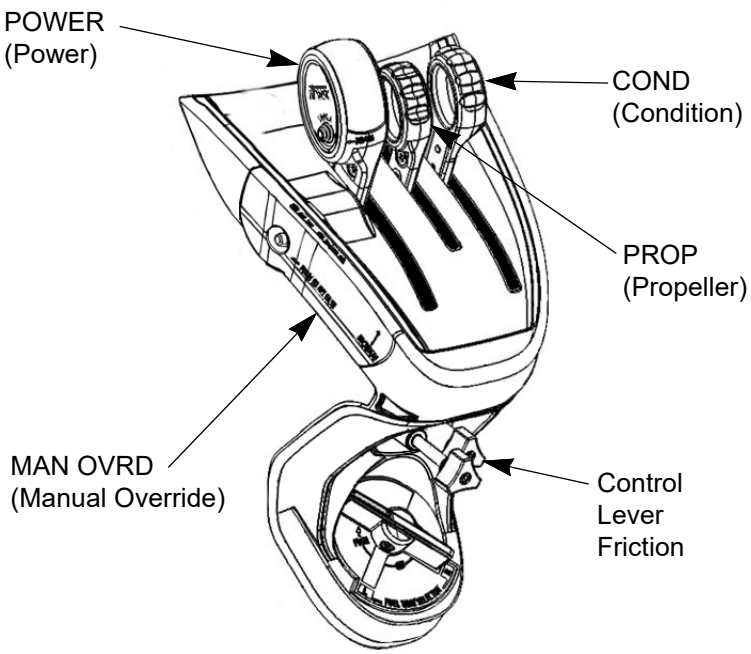

7.7.1.1 POWER LEVER

The Power (POWER) lever selects the required engine power (NG) through a range from idle to maximum. In certain conditions it directly controls the propeller pitch.

The POWER lever has a flight and a ground operating range separated by a lift gate immediately aft of the IDLE position. The flight operating range is forward of the gate. When the POWER lever is at the idle gate, the gas generator is at the idle speed selected on the COND lever, and the propeller is either feathered or at the primary blade angle, depending on the position of the PROP lever.

As the POWER lever is moved forward of the idle gate, engine power and propeller RPM speed increase until each are high enough for the propeller to operate in a constant speed mode. In this mode, the propeller governor selects the propeller pitch to maintain the propeller speed selected on the PROP lever.

A lifting action to raise the POWER lever over the flight idle gate is required to move it into the ground fine and reverse thrust operating range.

CAUTION

TO PREVENT DAMAGE TO ENGINE CONTROLS, DO NOT MOVE THE POWER LEVER AFT OF THE IDLE GATE WITH THE ENGINE NOT RUNNING.

Aft of the idle gate is the BETA range for ground fine and reverse thrust operations. The POWER lever must be lifted over the idle gate to move it into the BETA range. In this mode, the beta valve controls the propeller pitch, allowing both engine power and propeller pitch to be controlled together with the POWER lever.

Initial POWER lever movement aft of the idle gate adjusts the propeller pitch while the gas generator remains at idle (ground fine) and can be used to control taxi speed. Further aft movement causes the propeller to move into the reverse range followed by an increase in engine power.

7.7.1.2 CONDITION

The Condition (COND) Lever has three positions and is used to select the gas generator idle speed and shut down the engine. The LOW position (approximately 52% NG) is for engine start and shutdown, or periods of long idling. To ensure the propeller speed remains outside the prohibited range (400 to 900 rpm), use the LOW setting only when the propeller is feathered.

The HIGH position (approximately 71% NG) is selected for ground and flight operation. HIGH idle keeps the propeller speed out of the prohibited range and provides sufficient bleed air flow to maintain cabin pressurization at minimum NG and to give smooth engine response to POWER lever movement during approach and landing.

The FUEL CUT-OFF position mechanically stops the fuel flow to shut down the engine. To move the COND lever from the FUEL CUT-OFF to LOW position it must be lifted over a gate. The lever can then be moved from LOW to HIGH and back according to the setting of the lever friction knob. To move the lever from LOW to FUEL CUT-OFF it has to be lifted over the gate again.

7.7.1.3 PROPELLER

The Propeller (PROP) Lever selects the propeller speed during constant-speed mode through a range from a minimum of 900 to a max of 1700 rpm. In addition, the propeller can be feathered by pulling the PROP lever fully aft to the FEATHER position. The propeller is normally feathered prior to engine shutdown and remains feathered for the subsequent engine start.

7.7.1.4 MANUAL OVERRIDE

The red fuel control unit (FCU) Manual Override (MOR) Lever, located on the left side of the power quadrant and placarded MAN OVRD, controls the engine power in case of a pneumatic failure of the engine fuel control or in case of a POWER lever system failure. The MOR lever is an emergency device and it is possible to exceed engine limits if the MOR lever is operated too quickly. The MOR lever should allow the crew to continue safe flight and landing. Refer to POWER LEVER CONTROL LOSS (MANUAL OVERRIDE OPERATION) (3.4.4).

The MOR lever is operated by pushing the button on the side to unlock it then rotating as required. There is a gap between the MOR mechanism and the pneumatic bellows in the FCU. This gap must first be taken up before the MOR lever takes effect, which results in a dead band when starting to operate the MOR lever.

At high altitudes it is possible to achieve full engine power when operating the MOR system. At low altitudes with the MOR lever fully forward the MOR system may not give full engine power.

7.7.2 ENGINE INDICATING

The normal engine indicators are shown on the Engine Indicating System (EIS) on the left side of the MFD. When the Garmin G1000 NXi is in reversionary mode, the engine indicators are displayed on all the GDUs.

- TRQ - Engine Torque (%),
- NP - Propeller Speed (RPM),
- NG - Gas Generator Rotation Speed (%),
- ITT - Interstage Turbine Temperature (°C),
- OIL PSI - Oil Pressure (PSI),
- OIL TEMP - Oil Temperature (°C).

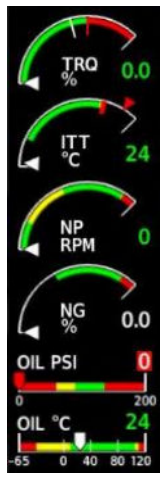

Normal
EIS



Reversionary
EIS

7.7.3 ENGINE FUEL

The engine fuel system consists of an oil to fuel heat exchanger, a high-pressure engine driven fuel pump, a fuel control unit, a fuel flow transducer, a fuel flow divider and dump valve, and the fuel nozzles.

Fuel is delivered to the oil-to-fuel heat exchanger from the fuel filter. The oil-to-fuel heat exchanger pre-heats the fuel, to eliminate the chance of ice formation in the fuel, and reduces the oil temperature. The high-pressure engine-driven fuel pump delivers fuel to the fuel control unit after it passes through the oil-to-fuel heat exchanger. Refer to FUEL SYSTEM (7.5) for more information.

The fuel control unit is controlled by the POWER and COND levers during normal operations, and the MANUAL OVERRIDE lever during emergency operation. The fuel control unit is also controlled by the propeller governor and torque limiter at the front of the engine via the pneumatic PY control line. Either system can cause the FCU to reduce fuel flow by venting air pressure from the PY control line. Fuel flows through the fuel flow transducer on its way to the fuel flow divider and dump valve. The fuel flow transducer converts fuel flow rate into an electrical signal which is then displayed in the MFD EIS display.

The fuel flow divider and dump valve serves two functions. First, it divides the fuel between the primary and secondary manifolds. Second, it directs air from the fuel purge accumulator into the fuel manifolds in order to purge them of unused fuel at engine shutdown. The fuel manifolds deliver fuel to 14 duplex fuel nozzles with primary and secondary spray patterns.

7.7.4 ENGINE OIL

The engine oil system consists of pressure, scavenge, and breather systems with the oil tank being an integral part of the engine compressor inlet case. Oil is supplied to the engine bearings, bushings, reduction gears, accessory drives, torquemeter pressure transmitter, and propeller governor. Oil is also used to cool the bearings.

A filler neck with quantity dipstick and cap are located on top of the accessory gearbox. The quantity dipstick is marked in one US quart increments. It is not recommended to start a flight without any oil showing on the dipstick. Total oil capacity is 2.5 US gal (9.5 L) while usable oil quantity is 1.5 US gal (5.7 L). The oil tank incorporates a drain plug.

An engine driven gear type pressure pump provides oil to the engine bearings, torquemeter pressure transmitter, propeller bearings, reduction gears, and propeller governor. Oil flows from the integral oil tank, through the pick-up screen, to the oil pump. Oil then goes through a pressure regulating valve which regulates oil pressure to between 90 and 135 psi. A pressure relief valve opens when pressure exceeds 160 psi, possibly during cold weather operations. Oil then goes through a cartridge type oil filter assembly, which incorporates a bypass valve and a spring-loaded check valve. The bypass valve allows oil to bypass the filter in case the filter becomes clogged, however oil pressure drops to below 90 psi when the filter by-pass valve is open. The check valve prevents gravity oil flow into the engine after shutdown and permits the oil filter to be changed without draining the oil tank. Oil is then directed throughout the engine and applicable accessories.

The oil scavenge system incorporates two double element pumps. The oil from the reduction gearbox (RGB), which takes output power from the engine to turn the propeller, is pumped directly through the airframe mounted oil cooler. All remaining oil passes through the oil to fuel heat exchanger and, depending on oil temperature, is directed back to the oil tank or through the oil cooler.

When the fuel temperature is low, warm oil flows through the oil to fuel heater. At fuel temperatures above 21°C (70°F) the bypass valve begins to open and at 37°C (98°F) the bypass valve is fully open and the oil bypasses the oil to fuel heater.

The scavenge system in the propeller reduction gearbox incorporates a magnetic chip detector that detects foreign matter in the system and causes the **ENGINE CHIP** warning to be displayed. The chip detector also acts as the propeller reduction gearbox oil drain.

The breather system allows air from the engine bearing compartments and the propeller reduction and accessory gearboxes to be vented overboard through the centrifugal breather in the accessory gearbox.

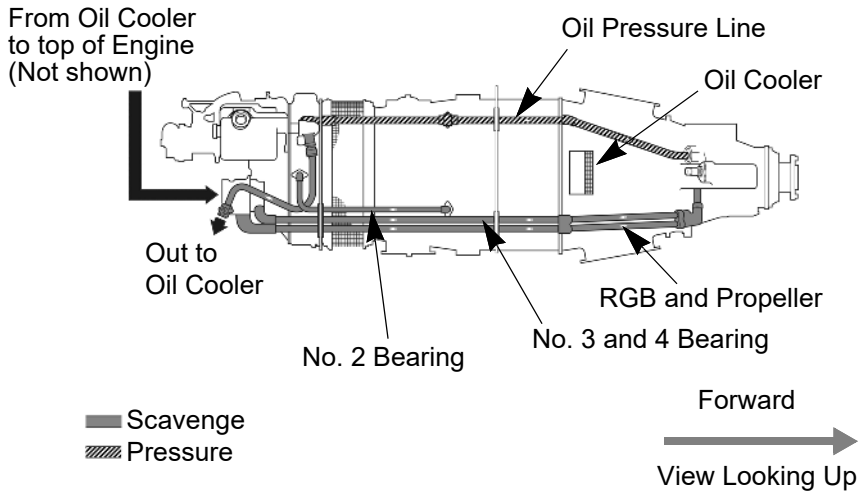

7.7.5 TORQUE LIMITER

A torque limiter is installed at the torque transmitter boss on the forward engine case. Within the unit is a sealed bellows connected directly to the torque meter oil pressure outlet, a flapper valve, a PY air bleed orifice and a torque-limit adjusting spring. Oil pressure proportional to engine torque is applied through cored passages in the reduction gearbox to the sealed bellows in the limiter body. The bellows is mechanically connected to the flapper valve and to the controlling spring.

With an increase in torque pressure, above the control spring setting, the flapper valve adjusts to compensate for this increase and causes the pneumatic pressure orifice to open and bleed off PY air. As PY air pressure is bled off, the fuel flow from the FCU is reduced by closing the metering valve, causing gas generator speed and engine torque to decrease until the engine torque meter pressure is balanced by the torque control spring pressure; at this time the PY pressure orifice closes.

The torque limiter limits the engine torque to slightly below 100% at sea level condition. At higher altitudes, due to ambient pressure and interference with the FCU maximum governing speed, it is possible for maximum torque not to be obtained.

7.7.6 ENGINE START

Starting is provided by the combination starter/generator unit. Power to the starter/generator is supplied from the Primary Bus.

Starter function is controlled by the Generator Control Unit (GCU) using the STARTER GEN and START switches in the PRE-START switch panel. The STARTER GEN is switched to the ON position to provide power to the GCU. After the START switch is pressed momentarily, the GCU energizes the starter relay in the Master Control Unit (MCU), which in turn energizes the starter. The starter will automatically disengage when the engine reaches 48% NG.

The **STARTER** caution will be displayed if the starter has been engaged for more than 60 seconds.

The start sequence can be interrupted at any time by switching STARTER GEN to off.

For information on the generator function, refer to STARTER/GENERATOR (7.9.1.2).

7.7.7 IGNITION

The ignition system provides the electrical spark required to initiate the combustion process during engine start. The system consists of an ignition exciter, two high-voltage cables, and two spark igniters.

Engine ignition is controlled by the IGNITER switch in the PRE-START switch panel. The IGNITER switch has two positions: AUTO and ON. In the AUTO position, the igniters will automatically turn on whenever torque drops below 20% while in flight (weight off wheels). The igniters can be turned on manually by switching IGNITER to the ON position.

The IGNITER switch should be in the ON position when operating the airplane in conditions of heavy precipitation, turbulence, severe icing, wind shear, or when inertial separators are on to help minimize the potential for a flame-out due to an interruption in total airflow. Refer to ENGINE IGNITER PROCEDURES (4.4.1).

7.7.8 ENGINE AIRFLOW AND COMBUSTION

Intake air for the engine is drawn aft through an intake located in the bottom engine cowling. The compressor assembly draws intake air through the AIR INDUCTION (7.7.9) and into the engine through an annular plenum installed around the compressor inlet case. Protection against foreign object damage and icing is provided by the air inlet screen and an inertial separator system.

The pressure of the inlet air is increased as it is drawn forward through each stage of the compressor assembly. From the centrifugal impeller, compressed air is directed radially to an array of diffuser pipes and straightening vanes then directed forward through to the combustion chamber. A compressor bleed valve regulates pressure within the compressor assembly.

Compressor discharge air, known as P3 air, is admitted to the interior of the combustion chamber through a series of perforations in the combustion chamber liners. Metered fuel from the fuel control unit is introduced to the interior of the combustion chamber through fourteen duplex nozzles.

The air/fuel mixture is ignited by a pair of spark igniters during engine start after which combustion is self-sustaining under normal engine operating conditions. Once ignited, the expanding combustion gasses are directed aft, then forward 180 degrees through the combustion chamber to the compressor turbine inlet. This expansion forces the gasses forward through the compressor turbine, the first stage power turbine, the second stage power turbine, and out the exhaust stacks.

Air not used in combustion, referred to as secondary air, is used by the engine for hot section cooling, bearing compartment sealing, and fuel control.

7.7.9 AIR INDUCTION

The air induction system is a pitot-style intake which directs and meters airflow into the engine. It consists of an inlet, diffuser-style ducts, inertial separators, and a plenum. Inlet air is directed equally into two ducts routed to the left and right sides of the engine then into an annular plenum surrounding the engine intake. A pneumatic de-ice boot is installed on the inlet lip. Each duct is equipped with an inertial separator to protect the engine from ingesting harmful particulate matter.

Each inertial separator is equipped with a vane controlled by an electric actuator via the INERT SEP switch in the ICE switch panel. When INERT SEP is switched OFF, the vanes are in the fully closed position and inlet air flows unimpeded into the engine air inlet. When INERT SEP is switched ON, the vanes open to force the inlet air to move through a sharp turn causing the particles to drop out of the air flow and discharge through an exit duct in the sides of the cowling.

The **INERT SEP ON** Advisory is displayed when the inertial separator vanes are open.

The **INERT SEP FAIL** Caution is displayed when the inertial separator is not in the commanded position within 30 seconds of the INERT SEP switch being selected ON or OFF.

Engine performance is affected depending upon the position of the inertial separator. Refer to ENGINE INERTIAL SEPARATOR PROCEDURES (4.4.2).

7.7.10 ENGINE ACCESSORIES

The following engine accessories are mounted on the front of the engine:

- Propeller
- Propeller governor
- Propeller overspeed governor
- Torque limiter
- Torque pressure transducer
- NP Tachometer Generator

The following accessories are mounted on the accessory gearbox on the rear of the engine:

- Starter/Generator
- Standby Alternator
- Fuel Control Unit
- High-Pressure Fuel Pump
- Oil-to-Fuel Heat Exchanger
- NG Tachometer Generator
- Hydraulic Pump

7.8 PROPELLER

This airplane is equipped with a full-feathering, full-reversing, counterweighted, variable-speed Hartzell 5-blade propeller. Integrated into each blade is an electro-thermal de-ice boot.

The full-feathering propeller hub uses oil pressure to bring the propeller out of feather. If there is a power failure and subsequent oil pressure loss, the propeller will feather, enhancing the glide range of the airplane.

The pilot has control over the propeller through the POWER and PROP levers. During flight, the propeller is governed to maintain a maximum of 1700 RPM and a minimum of 900 RPM. On the ground, the propeller can be moved into ground fine and reverse pitch through the POWER lever. Refer to ENGINE CONTROLS (7.7.1).

7.9 ELECTRICAL SYSTEM

The electrical system on the airplane is a 28 VDC system with a split-bus architecture providing independent sources of power to independent avionics display systems.

The electrical system consists of:

- One primary and five secondary buses controlled by a Master Control Unit (MCU)
- A diode-isolated essential bus
- A hot bus
- Two independent intelligent lithium-ion 20 ampere-hour batteries
- An automatic battery cross-tie
- Primary electrical generation from an engine driven 300 ampere 28 VDC starter/generator (limited to 200 amps on the ground)
- Secondary electrical generation from an engine driven 41 ampere 27.5 VDC standby alternator
- An external ground receptacle to connect to a ground power unit (GPU)

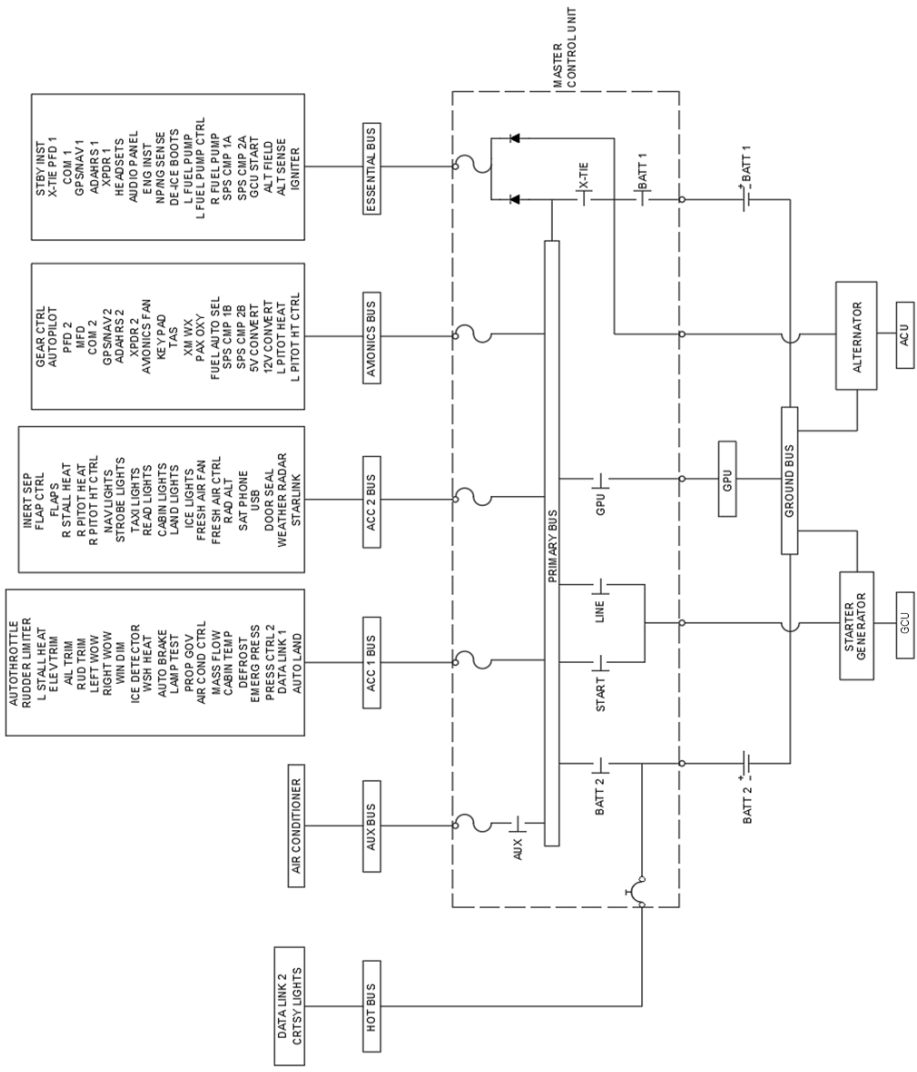
MASTER CONTROL UNIT
STBY INST
X-TIE PFD 1
COM 1
GPS/NAV 1
ADAHRS 1
XPDR 1
HEADSETS
AUDIO PANEL
ENG INST
NP/NG SENSE
DE-ICE BOOTS
L FUEL PUMP
L FUEL PUMP CTRL
R FUEL PUMP
SPS CMP 1A
SPS CMP 2A
GCU START
ALT FIELD
ALT SENSE
IGNITER
ESSENTIAL BUS
GEAR CTRL
AUTOPILOT
PFD 2
MFD
COM 2
GPS/NAV 2
ADAHRS 2
XPDR 2
AVIONICS FAN
KEYPAD
TAS
XM WX
PAX OXY
FUEL AUTO SEL
SPS CMP 1B
SPS CMP 2B
5V CONVERT
12V CONVERT
L PITOT HEAT
L PITOT HT CTRL
AVIONICS BUS
INERT SEP
FLAP CTRL
FLAPS
R STALL HEAT
R PITOT HEAT
R PITOT HT CTRL
NAV LIGHTS
STROBE LIGHTS
TAXI LIGHTS
READ LIGHTS
CABIN LIGHTS
LAND LIGHTS
ICE LIGHTS
FRESH AIR FAN
FRESH AIR CTRL
RAD ALT
SAT PHONE
USB
DOOR SEAL
WEATHER RADAR
STARLINK
ACC 2 BUS
AUTOTHROTTLE
RUDDER LIMITER
L STALL HEAT
ELEV TRIM
AIL TRIM
RUD TRIM
LEFT WOW
RIGHT WOW
WIN DIM
ICE DETECTOR
WSH HEAT
AUTO BRAKE
LAMP TEST
PROP GOV
AIR COND CTRL
MASS FLOW
CABIN TEMP
DEFROST
EMERG PRESS
PRESS CTRL 2
DATA LINK 1
AUTOLAND
ACC 1 BUS
AIR CONDITIONER
AUX BUS
DATA LINK 2
CRTSY LIGHTS
HOT BUS
X-TIE
BATT 1
BATT 1
PRIMARY BUS
GPU
GPU
LINE
START
BATT 2
BATT 2
AUX
GROUND BUS
ALTERNATOR
ACU
STARTER GENERATOR
GCU

7.9.1 POWER SOURCES

Power is supplied to the airplane from the batteries, starter/generator, standby alternator, and ground power receptacle.

7.9.1.1 BATTERIES

Two (2) True Blue TB20 batteries, rated at 20 ampere-hours each, are installed in parallel for engine starting and emergency power storage. Each battery is installed in a fireproof box that is vented overboard.

The batteries have a built-in Battery Management System (BMS). The BMS is responsible for enabling and disabling charging and discharging, protections based on internal monitoring such as current flow, as well as current limiting charging. The software logic monitors the battery functions and provides protection for conditions such as short circuit, over temperature, and over discharge.

Battery 1 is controlled by the BATT 1 switch in the PRE-START switch panel. When BATT 1 is switched ON, the Battery 1 relay closes, providing power to the Essential bus via an isolating diode and the Primary bus via the automatic cross-tie relay. See AUTOMATIC CROSS-TIE (7.9.2.1).

Battery 2 is controlled by the BATT 2 switch in the PRE-START switch panel. When BATT 2 is switched ON, the Battery 2 relay closes, providing power to the Primary Bus.

The batteries are designed to support an engine start from temperatures as low as -5°C (23°F) without preheat required. Below this temperature, the performance of the batteries decreases. To address this, each battery contains internal heaters which are powered by the batteries themselves, even at very low temperatures. The heaters are disabled when both the BATT 1 and BATT 2 switches are OFF. With the BATT 1 and BATT 2 switches ON, the heaters will automatically turn on when the battery temperature is below 0°C and off when the battery temperature is above 5°C.

NOTE

When the battery heaters are active, they consume approximately 600W per battery. GPU power will prevent the depletion of the batteries while the heaters are active.

The voltage of the batteries (BATT 1 and BATT 2) are displayed in the lower left corner of the MFD EIS.

The state of charge of the batteries is indicated indirectly with the **BATT 1 LOW**, **BATT 2 LOW**, and **NO BATT START** cautions.

Battery 1 and Battery 2 are connected to GIA 1 and GIA 2, respectively, via ARINC 429 to provide capacity, fault, and diagnostic data to the G1000 NXi. The following CAS messages may be displayed by the batteries:

BATT 1 CHRGING **BATT 2 CHRGING**	(Advisory): Battery is charging while the engine is not running.
BATT 1 HEAT **BATT 2 HEAT**	(Advisory): Battery is heating while the engine is running.
BATT 1 HEAT **BATT 2 HEAT**	(Caution): Battery is heating while the engine is not running (prior to start).
BATT 1 LOW **BATT 2 LOW**	(Caution): Battery state of charge is below 75%.
BATT 1 FAULT **BATT 2 FAULT**	(Caution): Battery is indicating an internal fault.
BATT 1 SERVICE **BATT 2 SERVICE**	(Caution): Battery is indicating that service is required.
NO BATT START	(Caution): Battery state of charge is below 25%, the minimum required for starting the engine with batteries only.

7.9.1.2 STARTER/GENERATOR

The engine-driven starter/generator is a single electric motor that serves as both starter and generator.

During engine start, the starter/generator is energized by the airplane batteries and optionally the ground power receptacle, and is referred to as the starter. Refer to ENGINE START (7.7.6) for more information.

As the engine reaches approximately 48% N_G, the starter disengages, and the starter/generator is reconfigured as a generator. Shortly thereafter, the generator connects to the primary bus to serve as the primary source of 300-ampere 28 VDC electrical power for the airplane. The generator is limited to 200-amperes on the ground. At high idle and above, the starter/generator is configured to generate approximately 28.8 VDC.

The starter/generator is controlled by the Generator Control Unit (GCU) and the Master Control Unit (MCU) using the following switches:

PRE-START Switch Panel

STARTER GEN	ON/OFF switch that controls power to the GCU and starter/generator
START	Momentary switch that initiates the start sequence

TEST Switch Panel (under cover)

OV TEST	Simulates an over voltage condition.
GEN TRIP	Simulates a generator trip.
GEN RESET	Restores the generator to normal operation after it goes offline.

The amperage of the generator (GEN AMP) is displayed above the BATT 1 and BATT 2 indicators in the lower left corner of the MFD EIS.

The **GEN FAIL** Warning is displayed when the generator is producing less than 5 amps and N_G is greater than 75%.

7.9.1.3 STANDBY ALTERNATOR

Secondary 28 VDC electrical power generation is with a 41-amp standby alternator manufactured by B&C Specialties. The standby alternator is controlled by the Alternator Control Unit (ACU).

The STBY ALTN switch controls power to the ACU and standby alternator. The ACU will bring the standby alternator online whenever the essential bus voltage drops below approximately 28.4 VDC.

The amperage of the standby alternator (ALTN AMP) is displayed above the BATT 1 and BATT 2 indicators in the lower left corner of the PFD.

The **ALTERNATOR ON** Caution is displayed when the standby alternator is on and generating power.

7.9.1.4 GROUND POWER RECEPTACLE

The ground power receptacle allows connection of the airplane to a ground power unit.

The ground power controller gives voltage sense detection and over-voltage protection.

See GROUND POWER (8.8) for connection and disconnection procedures.

CAUTION

IF USING A GPU FOR STARTING THE ENGINE, ENSURE IT PROVIDES A 28-VOLT REGULATED VOLTAGE WITH NEGATIVE ON GROUND AS WELL AS SUPPLYING 800 AMPERES MINIMUM AND 1,000 AMPERES MAXIMUM. REFER TO THE PLACARD NEAR THE GROUND POWER RECEPTACLE DOOR.

NOTE

The GPU needs to provide minimum of 200 amperes for operation of all equipment on the airplane other than the starter.

7.9.2 POWER DISTRIBUTION

The electrical power distribution system consists of the Primary bus in the Master Control Unit (MCU), the Essential bus, Avionics bus, Accessory buses 1 and 2, Auxiliary bus, Hot bus, relays, circuit breakers, and switches.

The Primary bus is the main electrical distribution path. Power from the batteries, ground power receptacle, generator and/or standby alternator is distributed via the Primary bus to the starter and secondary buses.

The Essential bus provides power to equipment considered essential for the safety of flight and is powered via two redundant paths protected by isolating diodes: from the Primary bus, and separately from Battery 1 and the Standby Alternator.

7.9.2.1 AUTOMATIC CROSS-TIE

The automatic cross-tie system connects Battery 1 and the Standby Alternator to the Primary bus. This is controlled by a relay that is energized by the X-TIE circuit breaker connected to the Essential bus. After activating the BATT 1 switch ON, the BATT 1 relay will close, energizing the Essential bus which in turn will energize and automatically close the cross-tie relay.

7.9.2.2 CIRCUIT BREAKERS

Circuit breakers are used to protect the electrical system. The circuit breakers are located in two cockpit circuit breaker panels, in the engine compartment on the MCU, and behind the aft pressure bulkhead near the air conditioning compressor.

Circuit breaker capacities are labeled on the top of each breaker. Circuit breakers can be in either an open (out) or closed (in) position. In the closed position the circuit is connected, and in the open position the circuit is disconnected. A circuit breaker will automatically open if a fault or overload occurs. To reset a circuit breaker, push it in.

CAUTION

DO NOT RESET A CIRCUIT BREAKER IN FLIGHT UNLESS IT IS ESSENTIAL FOR SAFE FLIGHT AND LANDING, AND IN THAT CASE RESET THE CIRCUIT BREAKER NO MORE THAN ONCE.

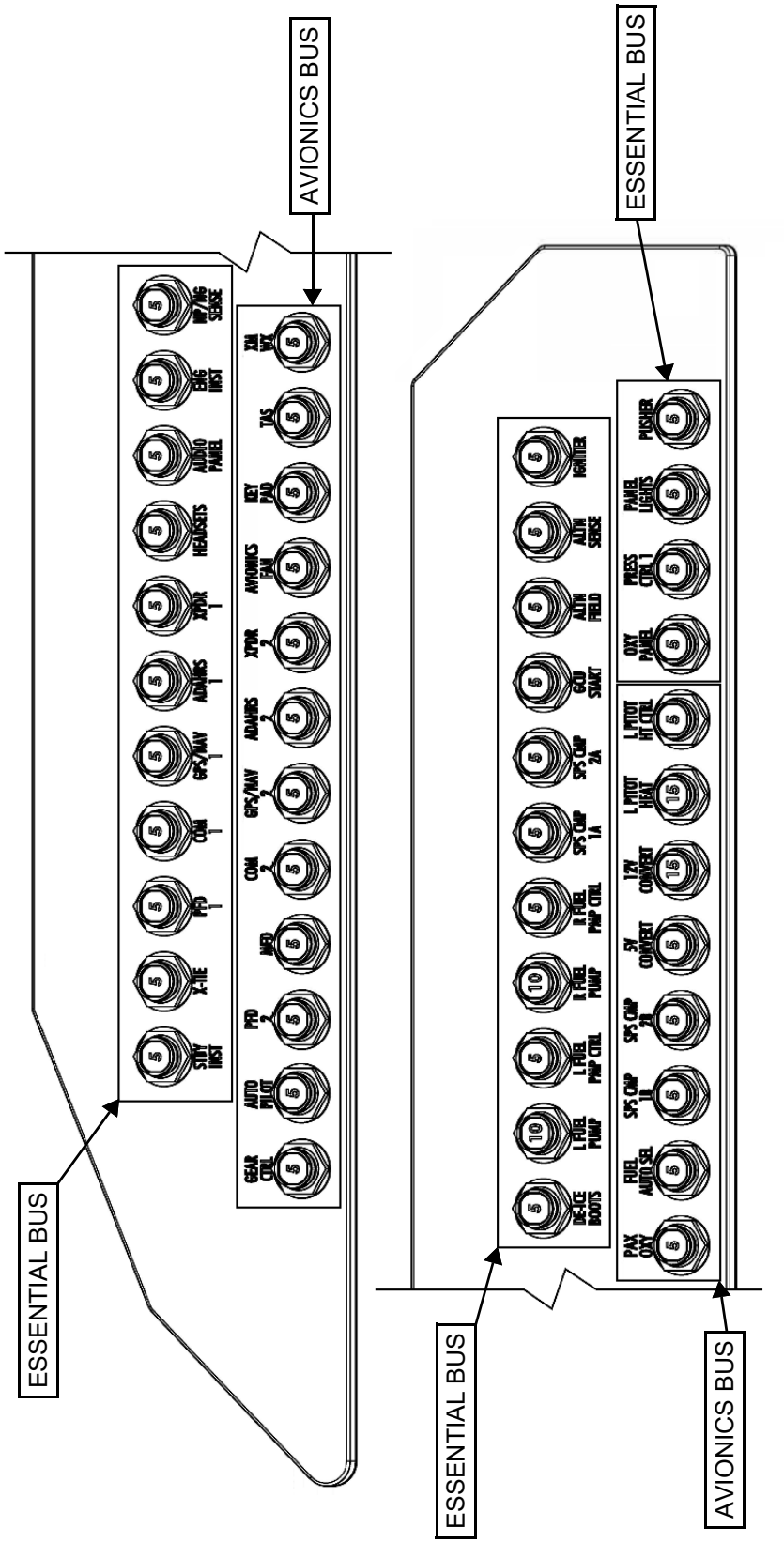

LEFT CIRCUIT BREAKER PANEL

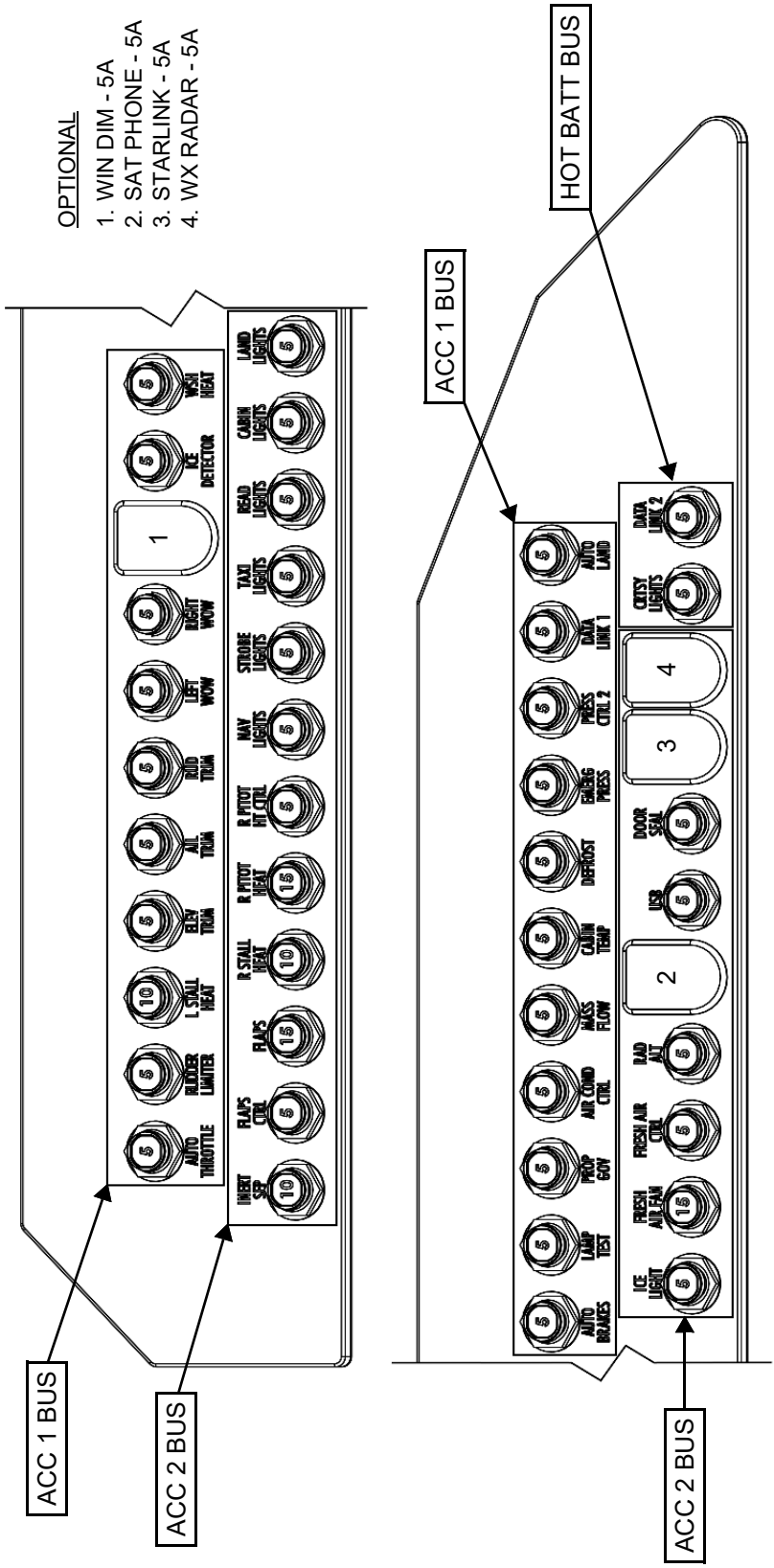

RIGHT CIRCUIT BREAKER PANEL

7.9.2.3 SWITCHES

The Pre-Start, Pre-Taxi, and Systems Switches are located above and to the left of the circuit breaker panel on the pilot's side.

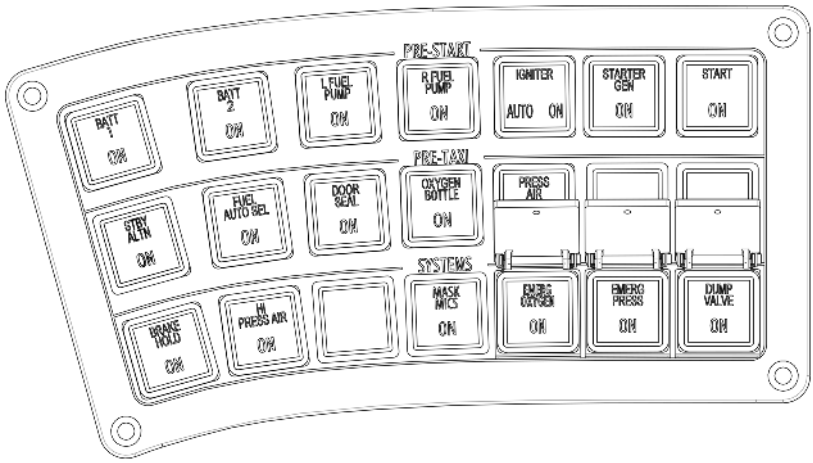

Pre-Start, Pre-Taxi, and Systems Switch Panel

The Lights and Ice Protection Switches are located above and to the right of the circuit breaker panel on the pilot's side.

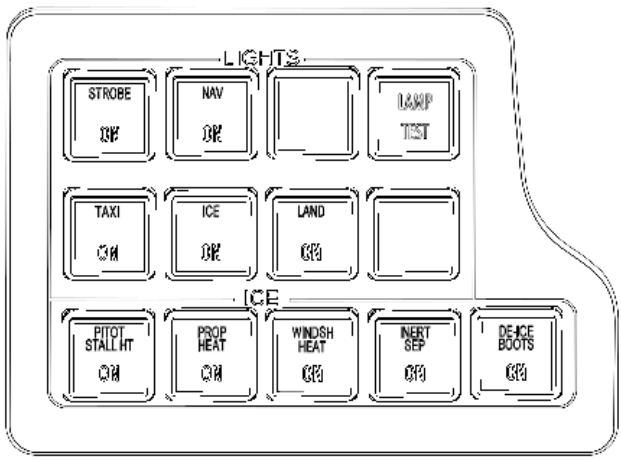

Lights and Ice Switch Panel

The STALL TEST, PROP GOV TEST, GEN RESET, GEN TRIP, and OV TEST switches are located behind a protective cover above the circuit breaker panel and to the extreme left of the instrument panel on the pilot's side.

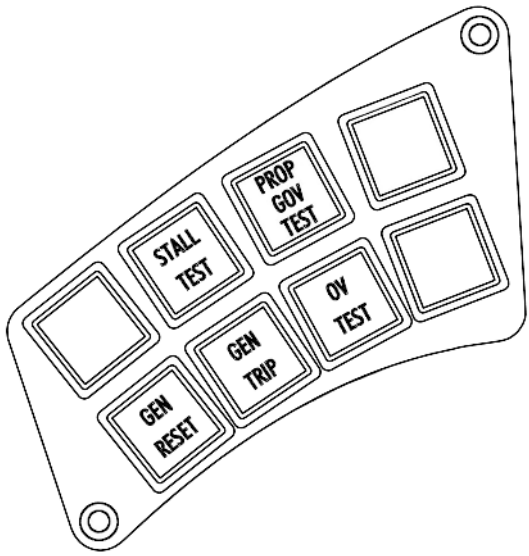

Test Switch Panel

The GROUND FRESH AIR, AIR COND, and DEFROST switches are in the climate control panel immediately to the lower right of the MFD.

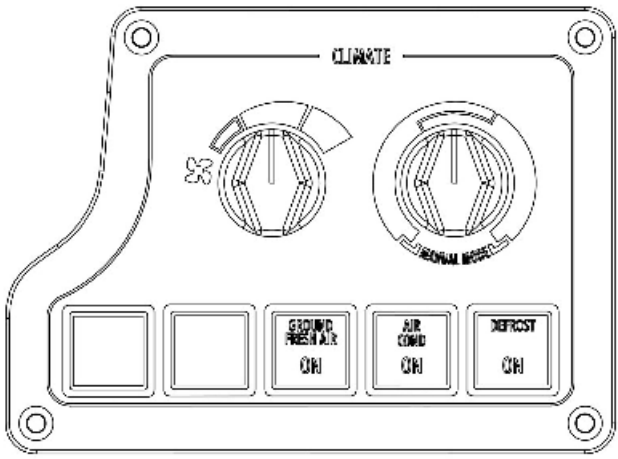

Climate Control Panel

7.9.2.4 PASSENGER POWER OUTLETS

The aircraft contains two types of crew and passenger convenience power: 12VDC accessory and USB charging.

A Garmin GSB 15 dual USB Type-A/Type-C port, located in the pilot's kick panel, which provides up to 27W (5V/3A, 9V/2A, 12V/2.25A) output per port, plus data connectivity abilities. Four True Blue dual USB Type-A/Type-C ports, are installed in the copilot's kick panel, right mid and aft cabin seat side panels, and the left mid-cabin The USB charging ports are powered through the 5A USB circuit breaker on the ACC 2 bus. seat side panel. They provide 15W (5V/3A) of output per port.

Two 12VDC accessory outlets, powered through the 15A 12V CONV circuit breaker on the ACC 2 bus, are installed on the right side of the instrument panel and in the right mid passenger side panel. They provide a combined total of 6A output.

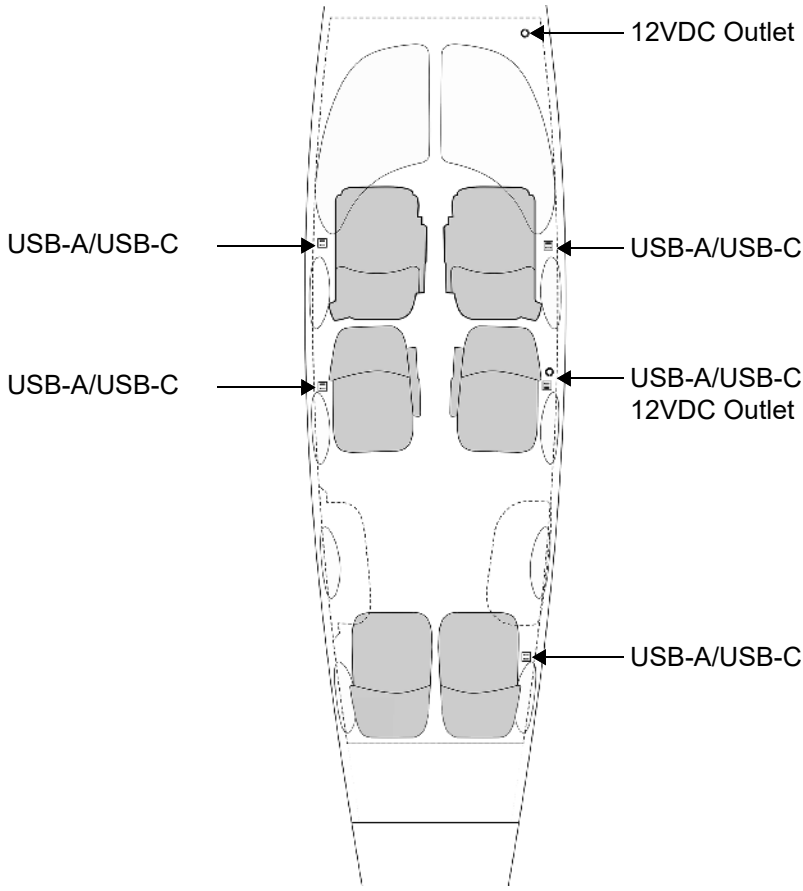

12V and USB Locations

7.10 LIGHTING

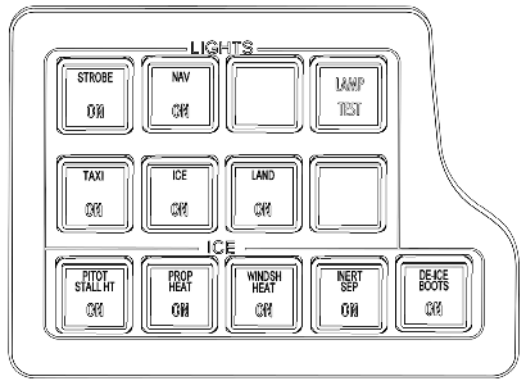

7.10.1 EXTERIOR LIGHTING

The airplane has two landing lights, two taxi lights, three combined navigation/strobe lights, and a wing leading edge icing inspection light. Switches for the external lights are located on the LIGHTS switch panel.

7.10.1.1 LANDING LIGHTS

Each wing tip is equipped with an LED landing light. Both landing lights are turned on or off using the LAND switch.

7.10.1.2 TAXI LIGHTS

Two LED diffused taxi lights are mounted on the nose landing gear. Both taxi lights are turned on or off using the TAXI switch.

7.10.1.3 NAVIGATION AND STROBE LIGHTS

The navigation and strobe lights are combined into a single light assembly mounted on each wing tip and on the top of the rudder. The navigation lights are turned on or off using the NAV switch, and the strobe lights are turned on or off using the STROBE switch.

7.10.1.4 WING LEADING EDGE ICING INSPECTION LIGHT

The wing leading edge icing inspection light is mounted on the left side of the fuselage and illuminates the left wing leading edge when activated. This light is turned on or off using the ICE switch.

7.10.2 INTERIOR LIGHTING

Interior lighting in the cabin consists of pilot controlled overhead cabin lighting and accent lighting, as well as individually controlled reading and cargo compartment lights. Lighting in the cockpit consists of pilot controlled red floodlighting and white instrument panel backlighting (including the circuit breaker panel), as well as individually controlled reading lights.

7.10.2.1 LAMP TEST

When switches in the switch panels are pressed, they illuminate when "ON". If the switch does not illuminate it indicates either a bad switch or a bad switch light.

Pressing the LAMP TEST switch on the LIGHTS switch panel will cause the lights in all of the switches to illuminate verifying each indicator light within the switch is functioning.

The LAMP TEST switch also simulates a landing gear down-and-locked signal, allowing the pilot to confirm the functioning of the landing gear indicators.

NOTE

Pressing the LAMP TEST switch in flight may cause a **GEAR MISCOMP** caution, that will automatically clear once the LAMP TEST switch is released.

7.10.2.2 DIMMABLE WINDOWS (OPTIONAL)

The six windows in the cabin, the window in the entry door, and the window in the emergency exit have an integral polarizing film that lets them be lightened or darkened as required.

At the base of each window is a control panel with a "+" button (makes the window darker), a "-" button (makes the window lighter), an LED indicator of window opacity, and a blue LED that when lit indicates there is power to the window.

The pilot controls the dimmable windows using a three position knob. At the pilot's discretion the windows can be set to fully dim, fully clear, or manual control (window control panel active). When set by the pilot to fully dim or fully clear the passengers have no control over the windows opacity.

7.10.2.3 DIMMING INTERIOR LIGHTING

All interior lighting may be dimmed using the dimmer control panel.

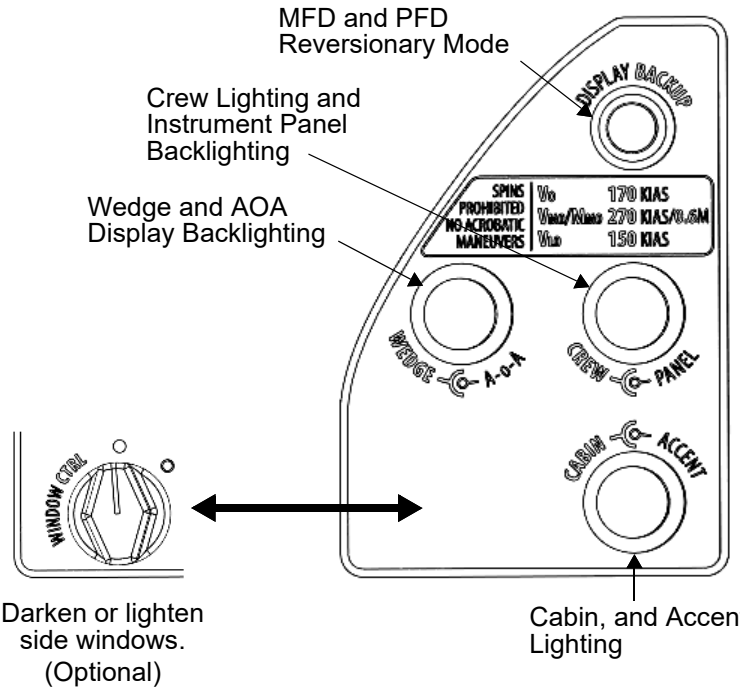

7.10.2.4 CABIN AND ACCENT LIGHTS

Cabin lighting consists of light strips in the overhead panel and lighting in door steps and is controlled with the CABIN dimmer. Accent lighting consists of a colored accent strip on the interior wall and is controlled with the ACCENT dimmer.

When the airplane power is off, the cabin and accent lighting illuminates automatically when the door is opened or closed. After activation the lights will extinguish after nine minutes. A button on the door (inside cabin) labeled “COURTESY LIGHT” may be pressed to manually turn the cabin and accent lighting on and restart the timer.

When airplane power is on, the cabin and accent lighting is powered continuously and may be dimmed using the dimmer control panel on the upper left side of the instrument panel.

7.10.2.5 READING AND CARGO COMPARTMENT LIGHTS

There are six LED reading lights (one per each crew and passenger) and one LED cargo light installed in the overhead finish panel.

Each light is individually operated using a push on/push off switch immediately adjacent to the light.

7.10.2.6 CREW, INSTRUMENT PANEL, AND CIRCUIT BREAKERS

Red light strips under the glare shield illuminate the entire crew area and are controlled with the CREW dimmer. Red spotlights in the overhead panel illuminate the engine controls and floor between the crew seats. These are controlled using a dimmer switch in the overhead panel.

The panels, switches, and levers on the instrument panel and the circuit breakers at the bottom of the instrument panel are all backlit. These lights may be controlled using the PANEL dimmer.

7.11 ENVIRONMENTAL CONTROL SYSTEM

The environmental control system provides heating, cooling, fresh air, and pressurization systems for the safety and comfort of the crew and passengers. It consists of a temperature-controlled bleed air system, a cabin pressurization system, a vapor-cycle air-conditioning system, and a ground fresh air system.

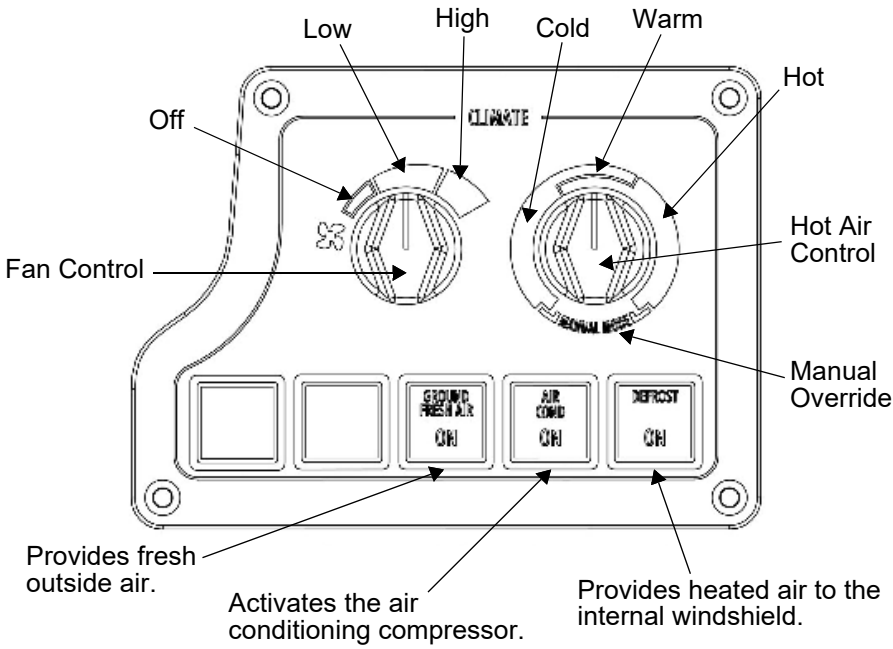

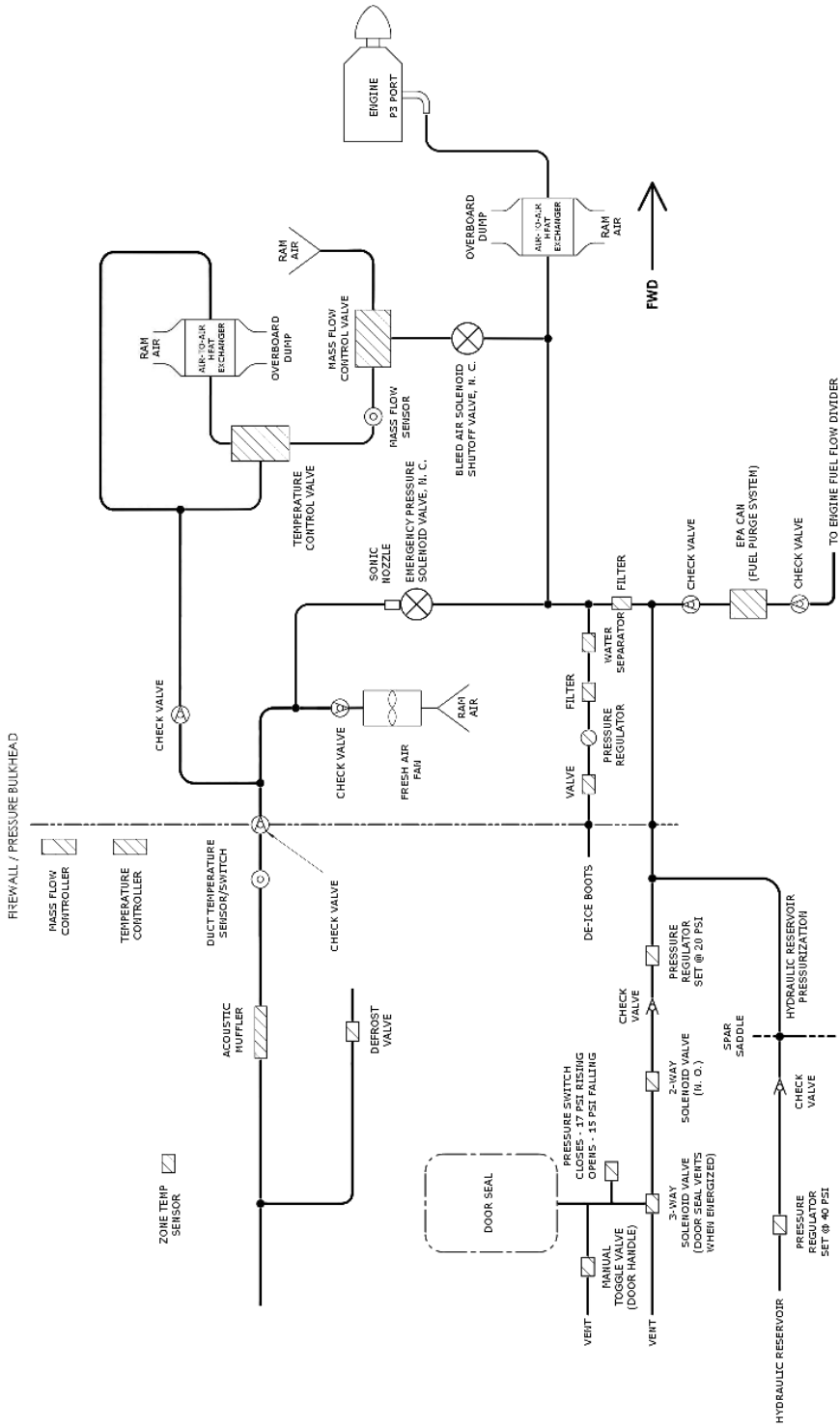

Environmental Control System
1 of 2

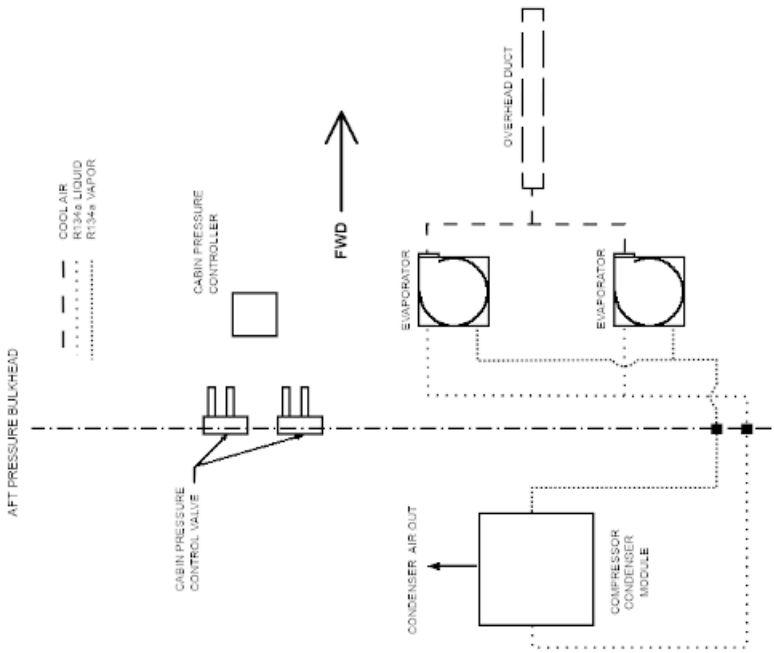

Environmental Control System
2 of 2

7.11.1 TEMPERATURE-CONTROLLED BLEED AIR SYSTEM

Warm pressurized air is provided to the cabin by the temperature-controlled bleed air system. This air heats the cabin and provides the mass air inflow required for pressurization.

P3 bleed air from the engine is routed through a primary air-to-air heat exchanger (intercooler) on the right side of the engine compartment, a bleed air shutoff solenoid valve, a mass flow control valve, a temperature control valve, optionally a secondary intercooler on the left side of the engine compartment, a series of check valves, and an acoustic muffler, to be distributed throughout the cabin via a number of vents along the floor.

The bleed air shutoff solenoid is controlled by switching PRESS AIR in the PRE-TAXI switch panel ON, which causes the bleed air shutoff solenoid to open.

The mass flow control valve is controlled by an electronic flow controller which receives input from an integrated flow control sensor to determine the actual mass flow of pressurized air to the cabin. Bleed air is also mixed with ambient air in the flow control valve to further reduce the temperature of the pressurized air. There are three mass flow settings: ground, normal, and high. The ground flow setting is set by the weight-on-wheels switch and is not sufficient to pressurize the airplane but will provide some mass air flow for cabin heating purposes. The normal flow setting is used when airborne. The high flow setting can be selected by switching HIGH PRESS in the SYSTEMS switch panel ON. This setting is used for extra cabin heat or additional air flow as required.

The temperature control valve manages the final stage of cooling of the pressurized air. Based on the setting of the Hot Air Control knob on the climate control panel, the temperature control valve routes a portion of the pressurized air through the secondary intercooler to cool it further. The remainder of the warm pressurized air flows directly to the cabin.

The Hot Air Control has two manual settings and an automatic temperature range. Normal operation is to select automatic temperature control by positioning the Hot Air Control between the two extreme positions. This selects a constant cabin temperature to maintain based on the cabin air temperature sensor mounted on the aft pressure bulkhead near the ceiling of the cabin. If the system is unable to maintain a constant temperature, the Hot Air Control may be turned past the detent at either extreme position to manually select maximum cold or maximum hot pressurized air.

In the event of a bleed air/temperature control system failure, an emergency pressurization air system allows for P3 bleed air exiting the primary intercooler to be delivered directly to the cabin by switching EMER PRESS in the SYSTEMS switch panel ON. This opens the emergency pressure solenoid valve, which bypasses the normal flow and temperature control systems.

CAUTION

USE OF DEFROST TOGETHER WITH EMERG PRESS IS PROHIBITED.

The bleed air / temperature control system includes a duct temperature sensor inside the cabin. If the temperature of the pressurization air gets too high, the **DUCT TEMP HIGH** caution will be displayed. Refer to DUCT TEMP HIGH (3A.7.11). While the **DUCT TEMP HIGH** caution is displayed, the temperature control valve is automatically opened to reduce duct temperature.

CAUTION

Selecting Manual Hot may result in a **DUCT TEMP HIGH** caution depending on the engine power setting. For maximum heating during normal operations, place the Hot Air Control at the hot (clockwise) position within the Automatic temperature range.

7.11.2 CABIN PRESSURIZATION

Cabin pressure is maintained using the KAPS II pressurization system consisting of two outflow valves, and an auto-schedule controller. The outflow valves and their controller are mounted to the pressure bulkhead access panel aft of the rear passenger seats.

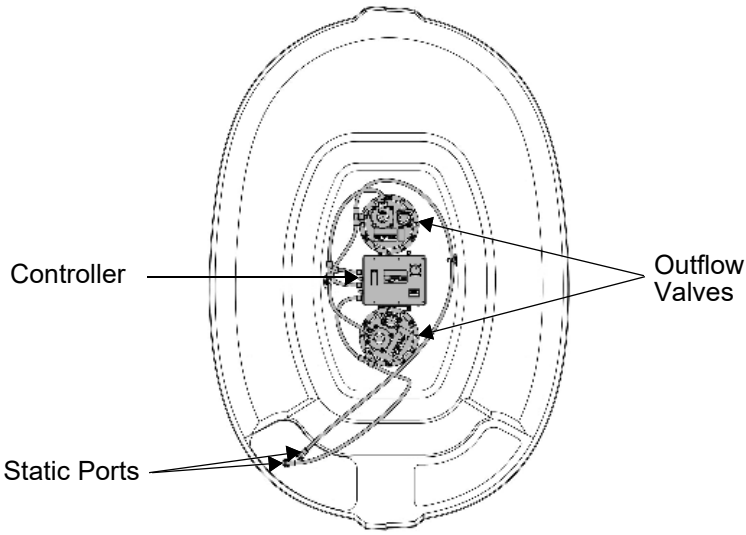

View looking aft.

The pressurization system is always powered on. On the ground, the weight-on-wheels switch keeps the cabin unpressurized. In flight, the pressurization system automatically optimizes cabin pressure for passenger comfort while maintaining airplane safety limits. Cabin altitude at FL340 is approximately 9750 ft with a differential pressure of 6.6 psi.

Airplane altitude and landing field elevation (LFE) are provided to the controller by the Garmin G1000 NXi. The landing field elevation is automatically or manually set in the TMR/REF window on both PFDs. Cabin altitude and differential pressure are displayed in the MFD EIS display.

Both outflow valves feature an independent Maximum Differential Pressure Limiter (Delta-P Limiter) and a Maximum Altitude Limiter (MAL). A common pneumatic connection between valves balances the outflow between them. As a pair, these outflow valves meet all applicable regulations regarding maximum and negative differential pressure. The outflow valves automatically vent when cabin pressurization exceeds 6.8 ± 0.1 psi.

The controller includes a manual cabin dump function selected by setting the covered DUMP VALVE switch on the SYSTEMS switch panel ON. The DUMP VALVE switch disables the controller and opens all outflow valves, depressurizing the cabin. The maximum cabin pressure altitude achieved during the cabin dump is limited to a cabin altitude of 15,000 ft by the maximum altitude limiter valve (MAL).

An independent cabin pressure switch triggers the **CABIN ALT HIGH** Warning when cabin exceeds 10,000 ft pressure altitude.

7.11.3 AIR CONDITIONING

The vapor-cycle air-conditioning system consists of a compressor and condenser located in the empennage aft of the pressure bulkhead, and two evaporators and fan assemblies located under the aft passenger seats. The air-conditioning system delivers cold air to the airplane through ducting up the sides and along the center of the roof of the cabin.

Fan speed is controlled using the Fan Control knob on the Climate Control Panel which has three settings: Off, Low, and High. These fans recirculate air throughout the cabin.

The AIR COND switch on the Climate Control Panel turns the air conditioning compressor either off or on to cool the recirculating air.

NOTE

This switch does not turn the compressor on unless the air conditioning fans have been turned on.

7.11.4 GROUND FRESH AIR

A fan located forward of the firewall on the left side of the airplane can be used to provide fresh air to the cabin. Air from this fan enters the cabin through the same ducts as the bleed air system.

The fan may be used to provide fresh air when the airplane is on the ground or during unpressurized flight to help clear smoke in the cabin in the event of an emergency.

The fan is operated using the GROUND FRESH AIR switch on the Climate Control Panel.

NOTE

The fan will run whenever the switch is pressed but is ineffective when the cabin is pressurized. The fan does not give sufficient airflow to overcome the pressurization of the cabin.

7.12 OXYGEN SYSTEM

This airplane has a continuous supply oxygen system designed for two crew members and up to four passengers. Oxygen is always available to crew members via always-on quick-don masks with on-demand regulators and integrated microphones. Quick connect outlets for the crew masks are located at the forward outboard sides of the cabin floor next to the seats. The integrated microphones in the crew masks can be selected by switching MASK MICS in the SYSTEMS switch panel ON.

Passenger oxygen is supplied by continuous-flow masks that automatically deploy from ceiling mounted cartridges when cabin altitude exceeds 14,000 ft. Passenger masks can be deployed manually by switching EMERG OXYGEN in the SYSTEMS switch panel ON. The hose to the passenger oxygen mask must be pulled gently to start the flow of oxygen to each mask.

The oxygen system has a 40 ft^3. capacity oxygen cylinder with regulator with a nominal working pressure of 1850 psi., a pressure transducer, a service port, a pressure gauge at the service port, an over-pressure/over-fill relief valve, a cabin altitude switch, two low pressure switches, distribution tubing, and oxygen masks.

Refer to Section 2 for oxygen use limitations and Section 5 for oxygen supply and duration charts.

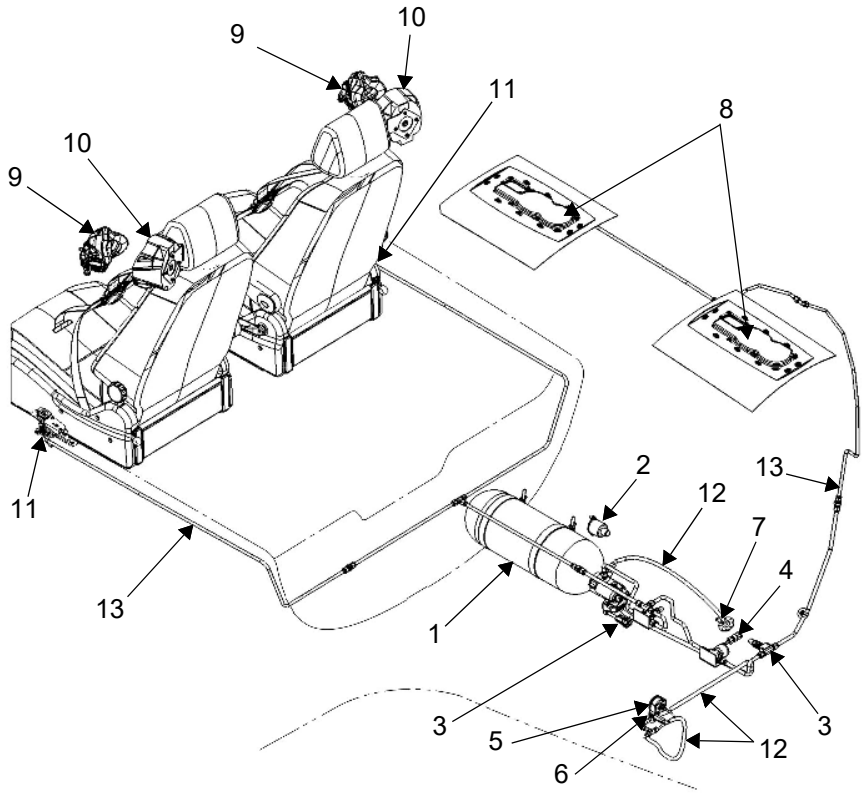

LEGEND

1. Oxygen Cylinder with Regulator
2. Altitude Switch
3. Low Pressure Switch
4. Solenoid Valve
5. Fill Port
6. Pressure Gauge
7. Over-Pressure/Over-Fill Relief Valve
8. Passenger Mask Delivery System
9. Crew Mask
10. Mask Holder
11. Quick Connect Coupler
12. High Pressure Flex Line
13. Low Pressure tubing

7.13 PITOT/STATIC SYSTEM

There are two unheated static ports, one each on the left and right sides of the fuselage just aft of the aft pressure bulkhead. The static ports provide static air pressure to the two ADAHRS, the standby instrument, and the pressurization system, during normal operation.

One heated pitot tube is installed under each wing near the wing tip. The pitot tube on the left wing provides dynamic pressure to ADAHRS 1 and to the standby instrument system. The pitot tube on the right wing provides dynamic pressure to ADAHRS 2. Static Source Error Correction (SSEC) is applied by the ADAHRS to meet Reduced Vertical Separation Minimum (RVSM) criteria. Corrected altitude and airspeed is displayed on both PFDs. The standby instrument system does not include SSEC, and will show slightly different airspeed and altitude than the primary displays.

Water trap/drains are located at each wing root for the pitot tubes and under the floor of the passenger compartment for the static ports. These are not pilot accessible.

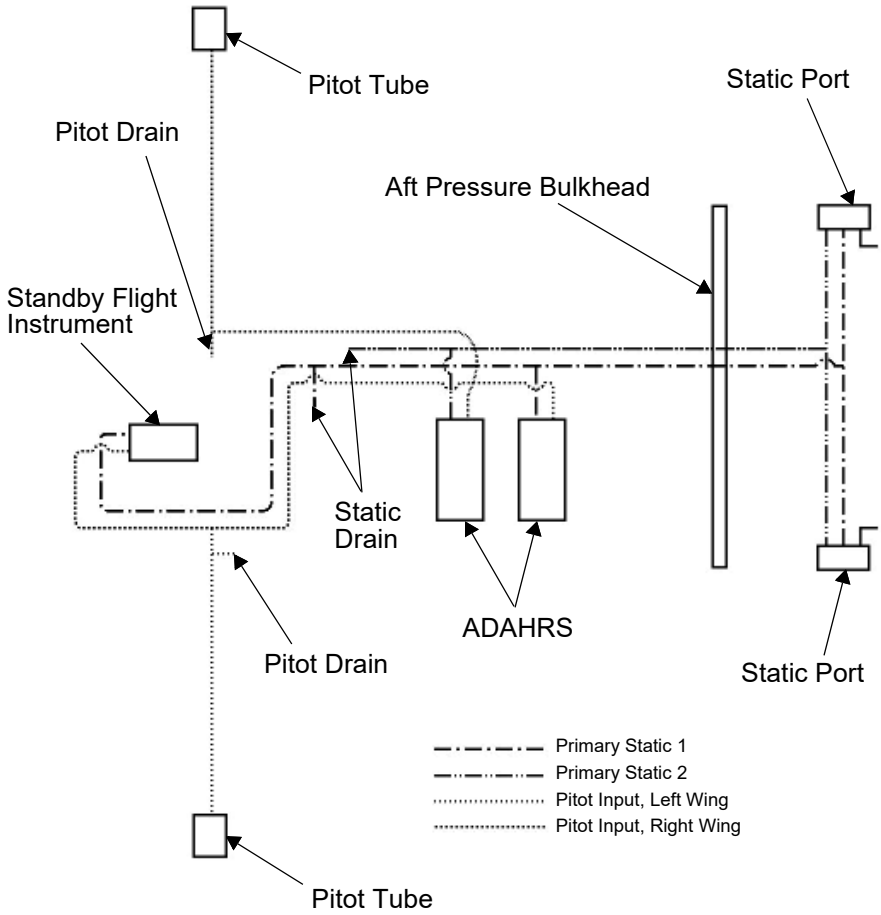

7.14 ICE PROTECTION

This airplane has an advisory ice detector and ice protection for the pitot tubes, stall prevention system lift transducers, wings, horizontal stabilizer, windshield, propeller, and engine inlet.

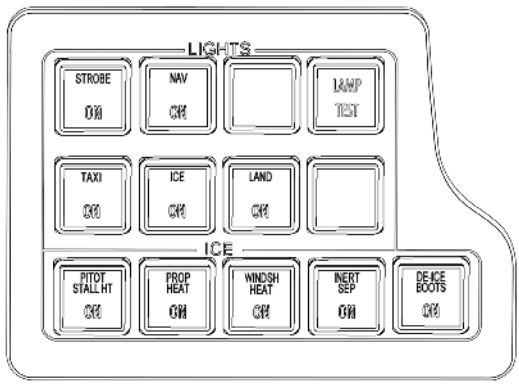

7.14.1 PROPELLER HEAT

Electrically heated boots are installed on the root of all the propeller blades. The system is activated by pushing the PROP HEAT switch on the ICE switch panel ON. While the propeller heat is on, two independent elements on each blade are alternately heated at a rate based on the outside air temperature (OAT) as follows:

		Automatic Propeller Heat Cycles
OAT	Above 0°C	Propeller heat remains off.
	−16°C to 0°C	45 seconds ON for each set. 90 seconds OFF.
	Below −16°C	90 seconds ON for each set, alternating.
	OAT FAIL Caution	90 seconds ON for each set, alternating.

The longer heating cycle at temperatures below −16°C heats the ice/water on the propeller longer allowing it to be shed more effectively.

When the propeller heat system is turned on, the OAT is used to automatically switch between propeller heat cycles. If a failure of one or more OAT probes is detected, the automatic switching function will not be available and propeller heat cycles will default to 90 seconds ON for each set, alternating. OAT failures are annunciated with the **OAT FAIL** Caution. When OAT is failed, the auto-off function will not be available, and the propeller heat will need to be manually turned off after landing.

CAUTION

TURNING ON THE PROPELLER HEAT WHILE THE PROPELLER IS NOT MOVING MAY CAUSE DAMAGE TO THE PROPELLER AND ITS HEAT SYSTEM.

NOTE

The PROP HEAT switch must be ON for any heat to be on the propeller blades.

NOTE

The **PROP HEAT FAIL** Caution will be displayed if the propeller heat is not functioning.

NOTE

Pusher Ice Mode is engaged when prop heat is turned on. Alternate approach speeds are applicable.

7.14.2 PITOT AND SPS LIFT TRANSDUCER HEAT

The pitot tubes and the SPS lift transducers are electrically heated. Each SPS transducer has 4 internal heating elements and 1 external supplemental heater installed above the main SPS transducer plate. All pitot and SPS transducer heating elements are controlled by the PITOT STALL HT switch on the ICE Switch panel. With the PITOT STALL HT switch ON, power to the pitot heater and external supplemental stall heater are determined by OAT and the on-ground condition. Power to the internal stall heater is determined by the PITOT STALL HT switch and the on-ground condition.

The weight-on-wheels switch controls an on-ground relay which in turn controls the temperature of the heating elements. On-ground, the heating elements are at half the power as in-air.

OAT is monitored and failures of either side are annunciated with the **OAT FAIL** Caution. Heaters will remain on if at least one OAT side is at or below 10°C. Internal SPS heating elements are unaffected by OAT failures.

With the PITOT STALL HT switch in the ON position, the pitot and stall system heat functions as follows:

	OAT > 10°C On-Ground	OAT ≤ 10°C On-Ground	OAT > 10°C In-Air	OAT ≤ 10°C In-Air
Pitot Heating Elements	OFF	ON (Half Power)	OFF	ON
SPS Lift Transducer Internal Elements	ON (Half Power)	ON (Half Power)	ON	ON
SPS Lift Transducer Supplemental Heaters	OFF	ON (Half Power)	OFF	ON

NOTE

If the on-ground relay becomes stuck in the closed position, the heating elements will remain at reduced heat during flight and the **PITOT RELAY FAIL** Caution will be displayed.

7.14.3 WING, HORIZONTAL STABILIZER, AND ENGINE INLET DE-ICE BOOTS

Pneumatic de-ice boots installed on the leading edge of the wings, horizontal stabilizers, and the engine inlet cyclically inflate and deflate to dislodge and remove any ice accumulation. Air pressure comes from the engine P3 bleed air system.

The de-ice boots are activated by switching DE-ICE BOOTS in the ICE switch panel ON. The inflation/deflation cycle for the de-ice boots is a total of 60 seconds long: 6 seconds inflated, and 54 seconds deflated.

NOTE

Pusher Ice Mode is engaged when de-ice boots are turned on. Alternate approach speeds are applicable.

Refer to WING LEADING EDGE ICING INSPECTION LIGHT (7.10.1.4) for information on the wing leading edge icing inspection light.

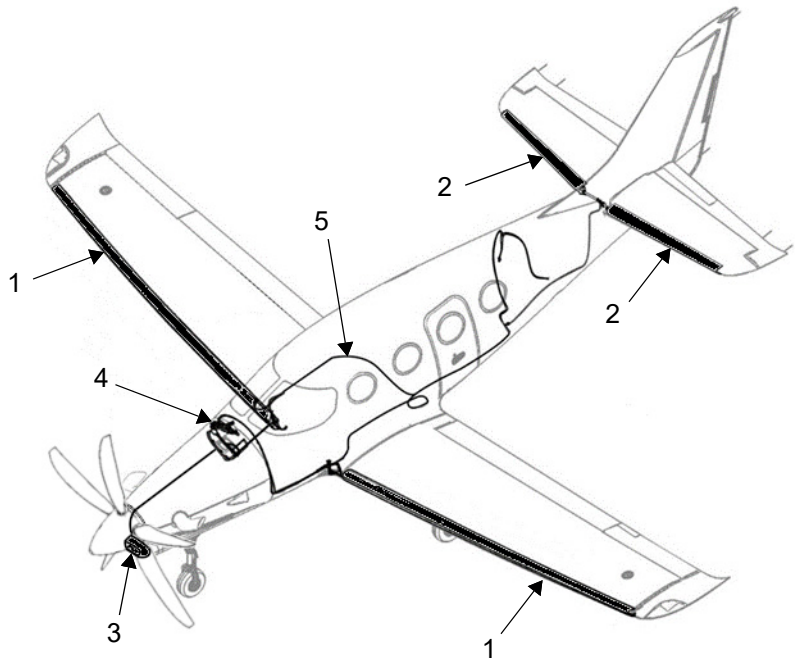

LEGEND

1. Wing De-Ice Boot
2. Horizontal De-Ice Boot
3. Engine Inlet De-Ice Boot
4. Inflation Manifold
5. Tubing

7.14.4 WINDSHIELD DE-ICE SYSTEM

The windshield de-ice system blows hot engine bleed air on the windshield to prevent or remove ice without damaging the windshield or its installation.

The windshield de-ice system is engaged by switching WINDSH HEAT in the ICE switch panel ON, which opens a solenoid allowing hot air to flow into the windshield de-ice manifold, out of the exhaust tubes, then over the windshield.

The windshield heat operation is sequenced with the pneumatic de-ice boot operation such that windshield heat is turned off when boots are inflated then turned back on when they are deflated. This sequencing is automatic, no pilot action is required.

The windshield structure and surrounding bonded area are protected against thermal overheat by a combination of physical insulation and convective cooling from ambient airflow when the outside air temperature is below 5°C.

OAT failures may result in the **WSH HEAT ON** Caution/Warning being erroneously displayed when the windshield heat function is on. OAT failures may also inhibit **WSH HEAT ON** Caution/Warning messages. Failures of the OAT data are annunciated with the **OAT FAIL** Caution.

7.14.5 ENGINE AIR INLET ICE PROTECTION

Refer to WING, HORIZONTAL STABILIZER, AND ENGINE INLET DE-ICE BOOTS (7.14.3) for information on the Engine Inlet De-Ice Boot and AIR INDUCTION (7.7.9) for information on the engine air intake inertial separator system.

7.14.6 ICE DETECTOR

An advisory optical ice detector probe is installed on the underside of the left wing leading edge. When ice is present on the detector probe, an ICE caution is displayed to advise the pilot of icing conditions and prompt the pilot to turn on the de-ice systems. The ICE caution will remain displayed until the ice clears from the detector probe.

If ice is present on the detector probe and the pilot turns the PROP HEAT and DE-ICE BOOTS switches ON, the ICE caution will be replaced with an ICE advisory. The ICE advisory will remain displayed until either the PROP HEAT or DE-ICE BOOTS switch is turned OFF. At temperatures -40°C and below, the DE-ICE BOOTS switch may be turned off to comply with the de-ice boot minimum operating temperature limitation, and the ICE advisory will remain displayed.

NOTE

The **ICE** advisory will remain displayed indefinitely while the PROP HEAT and DE-ICE BOOTS systems are on, even after ice has cleared from the detector.

To allow for testing the ice detector on the ground, the **ICE** caution and **ICE** advisory must first be acknowledged by the pilot before they are removed. The ICE CAS messages are inhibited at static OAT temperatures above 5°C in flight. If either OAT fails at a temperature greater than 5°C in flight, the ICE CAS messages are inhibited.

7.15 STALL PREVENTION SYSTEM (SPS)

The stall prevention system (SPS) consists of two lift transducers, one in the leading edge of each wing, connected to two independent lift computers, a control column shaker, and a control yoke pusher servo connected to the elevator cable.

Each lift transducer senses the deflection of its vane providing a continuous sensing of the airflow stagnation point and angle-of-attack (AOA). Each lift computer calculates a stall warning margin based on input from the lift transducers, flap position, and barometric altitude.

As the airplane approaches a stall condition, either lift computer can activate the control yoke shaker to warn the pilot and/or copilot, and the **STICK SHAKER** warning is displayed with the “STALL-STALL-STALL” aural annunciation.

If the angle-of-attack on both wings reaches a critical level, the pusher servo is activated to move the control yoke forward to immediately reduce angle-of-attack and prevent a stall, and the **STICK PUSH** warning is displayed with the “PUSH-PUSH-PUSH” aural annunciation

The PUSHER ICE MODE increases the stall warning speed and decreases the critical angle of attack of stick pusher activation in any of the following potential icing conditions:

- Flight above FL180
- Propeller heat is on
- De-ice boots are on

CAUTION

DISABLING BOTH SPS COMPUTERS WILL CAUSE PUSHER ICE MODE TO BE DISPLAYED, AND WHEN ICE PROTECTION SYSTEMS ARE OFF, AN ADDITIONAL ICE MODE FAIL CAUTION WILL BE DISPLAYED.

NOTE

The **PUSHER ICE MODE** advisory will display when the pusher ice mode is on below FL180.

The control yoke push servo can be temporarily disabled by pressing and holding the AP/TRIM DISC switch on either control yoke.

CAUTION

TRIM DISC (PRESSING AND HOLDING AP/TRIM DISC FOR MORE THAN 1.25 SECONDS) DOES NOT DISABLE THE PUSHER. AFTER RELEASING THE AP/TRIM DISC BUTTON, POWER WILL BE RESTORED TO THE PUSHER REGARDLESS OF THE STATE OF **TRIM DISC**.

Each lift computer receives on-ground/in-flight status from its respective Weight-on-Wheels (WOW) switch. When the WOW switch indicates the airplane is on the ground, the AOA-based shake and push are disabled.

The STALL TEST switch simultaneously activates both the shaker and the pusher. STALL TEST is disabled by the WOW switch when in the air, and is enabled on the ground.

7.16 AIRFLOW MODIFICATION DEVICES

Wing leading edge stall strips, airflow turbulators in front of the ailerons and on the leading edges, and vortex generators on the underside of the wings are the devices used for modification of the airflow over and under the wings to improve flight handling characteristics. None can be missing for flight.

There are two neoprene leading edge stall strips bonded to the leading edge de-ice boot on each wing. Pre-flight inspection includes checking that these stall strips are present and are not starting to disbond.

There are twenty turbulators bonded on top of each wing in front of the aileron. The turbulators are made of aluminum extruded into a triangular strip 2” long by 0.3” wide by 0.15” tall.

There are six vortex generators bonded on the underside of each wing. The vortex generators are made of aluminum sheet formed into an angle approximately 3” long by 1” wide by 1” tall.

There are six turbulators bonded to the leading edge de-ice boot, on either side of the Stall Prevention System lift transducers. The turbulators are made of rubber in a triangular shape that is 1” wide at the base.

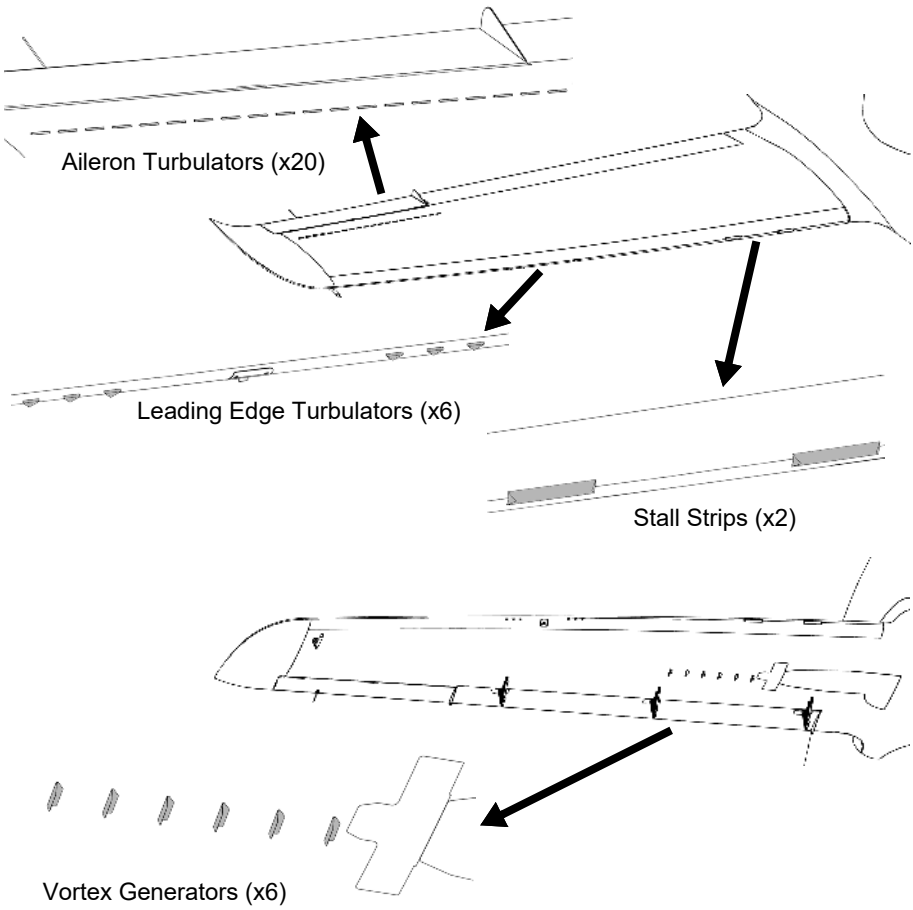

Right wing shown, left wing opposite.

7.17 STATIC WICKS

Static electricity has a tendency to build up on the surface of the airplane and can cause degradation of radio communications during flight. Static wicks are installed at the trailing edge of the wing tips (2 each), the elevator (2 at each tip), and the rudder (2) to discharge this static electricity into the atmosphere.

7.18 FIRE EXTINGUISHER

This airplane is equipped with a 1211/1301 Halon blend fire extinguisher approved for use on class A (ordinary combustibles), B (flammable or combustible liquids), and C (electrical equipment) fires.

The extinguisher is mounted with a quick release bracket within the underfloor compartment between the pilot's and copilot's seats.

CAUTION

DO NOT BLOCK ACCESS TO THE FIRE EXTINGUISHER COMPARTMENT. THE DOOR TO THE COMPARTMENT MUST BE KEPT CLEAR.

7.19 AVIONICS

7.19.1 GARMIN G1000 NXi INTEGRATED FLIGHT DECK

Refer to the appropriate Garmin G1000 NXi Epic E1000 Pilot's Guide for complete description and operation procedures for the Garmin G1000 NXi system and its components. The system software version stated in the Pilot's Guide must be appropriate for the system software version displayed on the equipment.

The Hour Meter is located on the MFD Aux Page Group on the Utility Page. The Hour Meter begins counting when the system enters into Air Mode and stops when the system enters into Ground Mode. Air Mode is triggered ON when True Air Speed (TAS) is greater than 50kts or GNSS Ground Speed is greater than 30kts. Ground Mode is triggered ON when neither True Air Speed or GNSS Ground Speed conditions occur.

7.19.2 GARMIN GFC 700 AUTOMATIC FLIGHT CONTROL SYSTEM (AFCS)

Refer to the appropriate Garmin G1000 NXi Epic E1000 Pilot's Guide for complete description and operation procedures for the Garmin GFC 700 Automatic Flight Control System (AFCS) and its components. The system software version stated in the Pilot's Guide must be appropriate for the system software version displayed on the equipment.

The GFC 700 AFCS is a dual-channel, fail-passive, fully digital flight control system comprised of smart servos and trim adapters controlled by software functions spread across several units of the G1000 NXi GIFD.

The system consists of the following components:

- GMC 711 Mode Controller
- Flight Management System Keyboard
- Integrated Avionics Units
- Pitch, Roll, and Yaw Servos
- Autothrottle and Brake Servos
- Pitch and Yaw Trim Adapters
- AP/TRIM DISC Switch
- AT DISC Switch
- CWS Switch
- TO/GA Switch
- Auto-Level Button

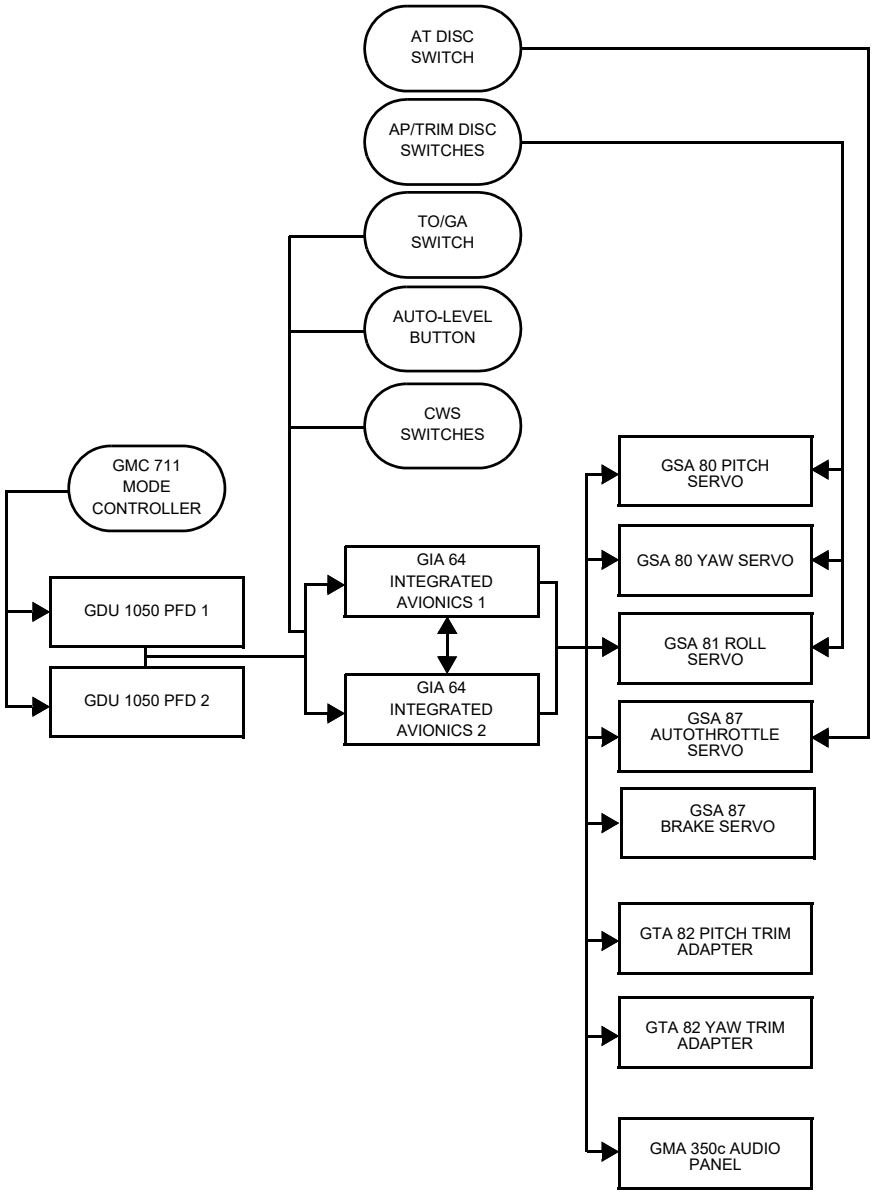

The GFC 700 AFCS can be divided into four primary operating functions:

Flight Director

Dual Flight Directors, one calculated in each Integrated Avionics Unit, provide pitch and roll commands to the AFCS system and display them on the PFDs. With the Flight Director activated, the pilot can hand-fly the airplane to follow the path shown by the command bars. The active Flight Director is selected on the GMC 711 Mode Controller and provides:

- Vertical and lateral mode selection and processing
- Command bars showing pitch/roll guidance
- Pitch and roll commands to the autopilot

Autopilot

Autopilot operation occurs within the pitch and roll servos, and the pitch trim adapter. The autopilot provides automatic flight control in response to flight directory steering commands, Attitude and Heading Reference System (AHRS) attitude and rate information, and airspeed.

NOTE

A failure of either AHRS will render the autopilot inoperative. The flight director may continue to function if the AFCS is transferred to a PFD referencing an operable AHRS.

Yaw Damper

Yaw Damper operation is provided by the yaw servo and yaw trim adapter. The Yaw Damper provides Dutch Roll damping and turn coordination in response to yaw rate, roll angle, lateral acceleration, and airspeed.

Autothrottle

The Autothrottle system provides engine power and speed control by controlling the power lever through a servo installed in the pedestal.

7.19.2.1 FUNCTIONAL LIMITS

The autopilot and Flight Director (FD) will not command pitch and roll beyond the Command Limits.

Axis	Autopilot Command Limit
FD Pitch Command Limits	+20°, –25°
FD Roll Command Limits	+/-60°

The autopilot will not engage beyond the Engagement Limits.

Axis	Autopilot Engagement Limit
Pitch	±50°
Roll	±75°

If the autopilot is engaged beyond the command limits (up to engagement limits), it will be rolled and/or pitched to within the command limits, and an altitude loss of 1000 feet or more can be expected while attitude is established in the selected mode.

7.19.2.2 CONTROLS

GMC 711 Mode Controller

The GMC 711 AFCS Mode Controller, located above the MFD, provides primary control of autopilot modes. A control wheel is included on the GMC to adjust flight director pitch reference. Through the mode controller, the Integrated Avionics Units serve the function of converting operator commands to logic signals for the roll and pitch functions.

NOTE

For more information about the autopilot modes, refer to the Garmin G1000 NXi Pilot's Guide.

AP/TRIM DISC Switch

The AP/TRIM DISC Switch on the pilot and co-pilot control yokes is used to disengage the autopilot, mute the aural alert associated with an autopilot disconnect, and interrupt Electronic Stability & Protection (ESP), Manual Electric Trim, Yaw Damper, and SPS Pusher.

Control-Wheel Steering (CWS) Switch

The Control-Wheel Steering (CWS) switch allows manual control of the airplane while the autopilot is engaged and synchronizes the flight director command bars with the current aircraft pitch when released (for select lateral and vertical modes). CWS also interrupts Electronic Stability & Protection (ESP).

Take-Off/Go-Around (TO/GA) Switch

The Take-Off/Go-Around (TO/GA) switch on the POWER lever is used to select Take-Off (TO) and Go-Around (GA) modes on the Flight Director.

Pressing and holding the TO/GA switch will illuminate the Before-Takeoff Configuration Checklist in the Wedge annunciation panel. All systems configured correctly for takeoff will be illuminated in green. Any system not configured for takeoff will be illuminated in red.

Autothrottle Disconnect (AT DISC) Switch

The Autothrottle Disconnect (AT DISC) swtitch on the POWER lever is used to disconnect the autothrottle.

Auto-Level Button

The Auto-Level Button, located on the instrument panel next to the landing gear switch, can be used by the pilot to activate the autopilot and provide assistance in leveling the aircraft.

7.19.2.3 ELECTRIC TRIM

The GFC 700 AFCS controls elevator and rudder trim through the pitch and yaw trim adapters, respectively. Aileron trim is not integrated with the AFCS.

Manual Electric Trim (MET) input from the pilots is routed through the trim adapters and will cause the autopilot and/or yaw damper to disconnect in response to manual trim input.

With the autopilot engaged, the GFC 700 AFCS applies pitch and yaw Automatic Electric Trim (AET) to relieve control force pressure on the servos.

Pitch trim monitoring is provided by both Integrated Avionics Units. In the event a trim monitor detects erroneous power being applied to the pitch trim actuator during AET operation, it will automatically disconnect the pitch trim system and display an AUTO PTRM FAIL caution. The AUTO PTRM FAIL caution and the pitch trim system can be reset with the TRIM RESET Switch. In the event a trim monitor detects erroneous power being applied to the pitch trim actuator during MET operation, a MAN PTRM FAIL caution will be displayed and the pilot may press and hold the AP/TRIM DISC switch to disconnect the pitch trim system (see 3A.8.20 MAN PTRM FAIL). The MAN PTRM FAIL caution will be reset only when the G1000 NXi system is powered down.

7.19.2.4 AUTOTHROTTLE

The Autothrottle system primarily controls engine torque to maintain a torque or an airspeed references, and provides automatic engagement of envelope protection modes. Automatic engagement of envelope protection modes consists of engine operating limit protection for torque, N_G, and ITT, as well as aircraft overspeed and underspeed protection.

The system is designed to fly the aircraft according to the phase of flight and flight director mode, and provide engine power or speed automation from takeoff to before landing. When the speed selector switch on the GMC 711 is in the MAN position, the target speed is manually controlled using the speed knob on the GMC 711. When the speed selector is in the FMS position, the autothrottle will either track a predefined speed or a predefined power target from the flight management system.

The autothrottle servo position and movement is monitored to annunciate potential failures and disconnect accordingly. The system disconnects when the pilot activates the AT DISC switch on the power lever or applies force to the power lever to overcome the servo.

The autothrottle servo is powered through the 5A AUTOTHROTTLE circuit breaker on the ACC1 bus, located on the right circuit breaker panel.

7.19.2.5 AUTOMATIC FLIGHT PROTECTION

The GFC 700 AFCS provides the following automatic flight protection features:

- Overspeed Protection (OSP)
- Underspeed Protection (USP)
- Electronic Stability & Protection (ESP)
  - Roll Protection
  - Pitch Protection
  - Electronic Stability Overspeed Protection (ESOSP)
- Envelope Protection (EP)
  - Engine Protection (Torque, N_G, ITT)
  - Overspeed Protection
  - Underspeed Protection

NOTE

For more information about the automatic flight protection features, refer to the Garmin G1000 NXi Pilot's Guide.

NOTE

ESP will not be available if the autopilot has failed.

7.19.3 ADS-B

The G1000 NXi incorporates dual Mode S extended squitter transponders to provide ADS-B Out capability. The system transmits ADS-B Out information on 1090 MHz. These components are interfaced with the G1000 NXi GNSS/SBAS receivers, altitude source, heading source, audio panel, and air/ground switch.

Both transponders perform the following functions:

- Transmission of ADS-B Out data on 1090 MHz extended squitter.
- Integration of data from internal and external sources to transmit the following data per 14 CFR §91.277:
  - GNSS Position, Altitude, and Position Integrity
  - Ground Track and/or Heading, Ground Speed, and Velocity Integrity
  - Air Ground Status
  - Flight ID, Call Sign, ICAO Registration Number
  - Capability and Status Information
  - Transponder squawk code, IDENT, and emergency status
  - Pressure Altitude Broadcast Inhibit
  - Diversity (top and bottom) antennas

If an XPDR1 system message advisory is displayed in combination with an XPDR2 message, the system does not meet ADS-B Out requirements.

Pressure Altitude Broadcast Inhibit (PABI) shall only be enabled when requested by ATC while operating in airspace requiring an ADS-B Out compliant transmitter. PABI is enabled by selecting the transponder to ON mode.

The G1000 NXi incorporates the Garmin GTX 345 DR Transponder to provide ADS-B In traffic capability.

- Reception of ADS-B In data on 1090 MHz ES and 978 MHz UAT directly from another aircraft or from a ground station.
- Provides ADS-B traffic information and alerting to the pilot via the interfaced display and audio output.

In the event of failure of the GTX 345 DR, the G1000 NXi incorporates the Garmin GTS 825 Traffic Advisory System or optional GTS 850/855 Traffic Alert and Collision System to provide ADS-B In traffic capability on 1090 MHz ES.

The G1000 NXi incorporates the Garmin GTX 345 DR Transponder to provide ADS-B In weather capability.

7.19.4 GARMIN GDL 60 DATALINK

The GDL 60 provides ground-based broadband datalink via a 4G LTE cellular and Wi-Fi (IEEE 802.11b/g/n) radios to the G1000 NXi. Additional Wi-Fi and Bluetooth radios provide in-air connectivity between the G1000 NXi and Crew/Cabin Portable Electronic Devices (PEDs). Additionally, the GDL 60 supports connectivity to other datalink radios including the GDL 69A SiriusXM (SXM) receiver and the optional GSR 56 Iridium SATCOM transceiver.

The GDL 60 provides the following functions:

- Automatic Database Updates
- Flight/Engine Data Logging
- Remote Aircraft Status
- Mobile Device Connectivity
- Entertainment Interface
- GSR 56 Interface

NOTE

For more information about the GDL 60 features, refer to the Garmin G1000 NXi Pilot's Guide.

The GDL 60 is powered from the DATA LINK 1 circuit breaker on the ACC 1 bus, and the DATA LINK 2 circuit breaker on the HOT BATT bus. The Remote Aircraft Status function allows pilots to remotely wake up the airplane to query the status of various systems. During this process, the GDL 60 will power on the ESSENTIAL bus from Battery 1 with the automatic cross-tie disabled.

7.20 EMERGENCY LOCATOR TRANSMITTER (ELT)

This airplane is equipped with a self-contained Kannad AF Integra Emergency Locator Transmitter (ELT) system installed on a shelf aft of the pressure bulkhead on the left side of the empennage. The transmitter uses internal and remote antennas and has a built in GPS providing a more accurate position to be transmitted.

The ELT can be activated either automatically when a crash occurs or manually using the ELT remote control panel located on the upper right side of the instrument panel.

The transmitter is designed to transmit on two frequencies (121.5 and 406 MHz). The 121.5 MHz frequency is mainly used for homing in the final stages of the rescue operations. The 406 MHz frequency is used by the COSPAS-SARSAT satellites for precise pinpointing and identification of the aircraft in distress.

Once activated, the transmitter operates continuously on 121.5 MHz, and a digital message is transmitted on 406.037 MHz every 50 seconds.

7.20.1 ELT SELF TEST

It is recommended by the manufacturer to test the ELT to detect any possible failure. A self-test should be performed regularly by the pilot or maintenance personnel from the cockpit (Remote Control Panel). It is recommended to perform a self-test at least once every six months but it should not be done more than once a month.

NOTE

Each self-test consumes energy from the battery. Should self-tests be carried out more often than the maximum allowed, the battery life-time might be shorter than specified.

NOTE

The self-test should be conducted only in the first five (5) minutes of any hour and then only for a maximum of three audio sweeps of the transmitter.

ELT Self-Test Procedure:

1. Check that the antenna is correctly connected. Do not perform self-test without antenna connected.
2. Tune aircraft radio to 121.5 MHz and ensure you can hear it.
3. Press RESET & TEST on the Remote Control Panel (ensure that the switch returns to the ARM position).
4. Listen for the buzzer or watch the LED - it operates during the whole self-test procedure.
5. Close to the end of self-test, a short (3 sweeps) 121.5 transmission is made. Verify you hear this on the airplane radio.
6. 10 seconds after the beginning of the self-test, the test result is displayed with the red visual indicator and the buzzer will sound:
   a. One long flash (duration 1 seconds) indicates that the system is operational and that no error conditions were found.
   b. A series of short flashes (200 ms) indicates the test has failed.

If the ELT self-test procedure fails, the ELT requires maintenance.

7.21 OPTIONAL EQUIPMENT

Refer to Section 9 SUPPLEMENTS.

SECTION 8

HANDLING, SERVICING, AND MAINTENANCE

TABLE OF CONTENTS

8.1 GENERAL 3
8.2 IDENTIFICATION PLATE 3
8.3 PUBLICATIONS 3
8.4 GROUND HANDLING 4
8.4.1 TOWING 4
8.4.2 PARKING 4
8.4.3 SECURING THE AIRPLANE 4
8.5 JACKING AND LEVELING 4
8.6 STORAGE 5
8.6.1 FLYABLE STORAGE 5
8.6.2 LONG TERM STORAGE 5
8.7 SERVICING 6
8.7.1 ENGINE OIL 6
8.7.2 FUEL 7
8.7.3 LANDING GEAR 8
8.7.4 OXYGEN SYSTEM 9
8.8 GROUND POWER 10
8.8.1 CONNECTION 11
8.8.2 DISCONNECTION 11
8.9 CLEANING 12
8.9.1 ADVISORY ICE DETECTOR 12
8.9.2 WINDSHIELD AND WINDOWS 12

This Page Intentionally Left Blank

Maximum oil consumption should remain below 0.025 US gal/hr (0.09 L/hr). Higher oil consumption should be referred to maintenance for evaluation.

CAUTION

DO NOT MIX DIFFERENT VISCOSITIES OR SPECIFICATIONS OF OIL AS THEIR DIFFERENT CHEMICAL STRUCTURE CAN MAKE THEM INCOMPATIBLE.

8.7.2 FUEL

8.7.2.1 SAFETY PRECAUTIONS

1. A fire extinguisher must be available and accessible.
2. Ground the airplane nose gear tow mount bracket and the fuel service equipment prior to fueling and defueling the airplane.
3. Ensure fuel tank vents are unobstructed.
4. Ensure airplane fueling operations are over 100 feet (30.48 meters) away from energized electrical equipment capable of producing sparks.
5. No open flames within 100 feet (30.48 meters) of the airplane or fueling vehicle.
6. No smoking 100 feet (30.48 meters) of the airplane or fueling vehicle.
7. Do not operate electrical equipment or electrical switches during fueling or defueling of the airplane.
8. Sample the fuel for any moisture or contaminates after each refueling and before the first flight of the day. Wait at least five minutes for any moisture and sediment to settle before flushing fuel drain valves.

8.7.2.2 REFUELING RECOMMENDATIONS

1. Park the airplane on level ground in a well-ventilated location outside of the hangar.
2. Ensure the airplane remains stationary using wheel chocks on the main wheels.
3. Electrically ground the airplane by connecting a grounding cable from the fuel service nozzle to the nose gear tow bracket.
4. Place a rubber protective mat on the wing and around the fuel tank filler port.

CAUTION

TO PREVENT DAMAGE TO THE INLET FLANGE DO NOT ALLOW THE FUEL NOZZLE AND HOSE TO REST UNSUPPORTED ON THE WING. DO NOT ALLOW THE FUEL NOZZLE TO COME IN CONTACT WITH THE BOTTOM OF THE INSIDE OF THE WING OR THE FUEL LEVEL SENSOR PROBE.

5. Remove the fuel cap then fill the wing to the desired level.

6. Remove the fuel service nozzle then install the fuel cap.
7. Move the fire extinguisher, protective mat, and fuel service nozzle to the remaining wing to be filled.
8. Place the protective mat on the wing and around the fuel tank filler port.
9. Remove the fuel cap then fill the wing to the desired level.
10. Remove the fuel service nozzle then install the fuel cap.
11. Remove the protective mat from the fueling area.
12. Disconnect the grounding cable from the nose gear tow bracket and the fuel service nozzle.
13. Return the fire extinguisher to its storage area.

8.7.3 LANDING GEAR

8.7.3.1 TIRE INFLATION

Inflation and servicing of the tires using nitrogen is recommended.

1. Nose Wheel Tire:..... 65 to 70 psi (448.2 to 482.63 kPa)
2. Main Gear Tire:..... 103 to 108 psi (710.16 to 744.6 kPa)

NOTE

Consider load factor and ambient temperature when checking tire pressure. Air pressure in the tire will increase when the tire is subjected to loads and when temperature increases.

8.7.3.2 HYDRAULIC FLUID AND NITROGEN SERVICING

Check the fluid level on the primary sight gauge on the right side of the hydraulic reservoir body. With the landing gear down and the hydraulic system pressurized, the fluid should not be below the 1/2 level in the primary sight gauge.

Refer to the latest revision of the Epic E1000 Maintenance Manual, p/n SK05000000 for nitrogen servicing.

8.7.3.3 BRAKE FLUID

1. Remove the upper engine cowling.
2. Remove any dirt, grime, or contamination from the reservoir before removing the cap.
3. Remove the cap then add brake fluid (type MIL-PRF-83282 or MIL-PRF-87257) as required. Add fluid to the reservoir if it is less than 3/4 full.
4. Install the filler cap.
5. Install the engine cowling.

8.8.1 CONNECTION

1. All cockpit switches ..... OFF
2. GPU Plug ..... CONNECT
3. GPU ..... ON
4. BATT 1 Switch ..... ON
5. BATT 2 Switch ..... ON (optional)
6. AIR COND Switch ..... ON (if air conditioning is desired)

CAUTION

If the Ground Power Unit does not provide adequate power for the electrical demand, the batteries will discharge over time. Make sure the batteries are charging or they have reached full charge (28V) while connected to the GPU.

8.8.2 DISCONNECTION

1. AIR COND Switch ..... OFF
2. BATT 2 Switch ..... OFF (if on)
3. BATT 1 Switch ..... OFF
4. GPU ..... OFF
5. GPU Plug ..... DISCONNECT

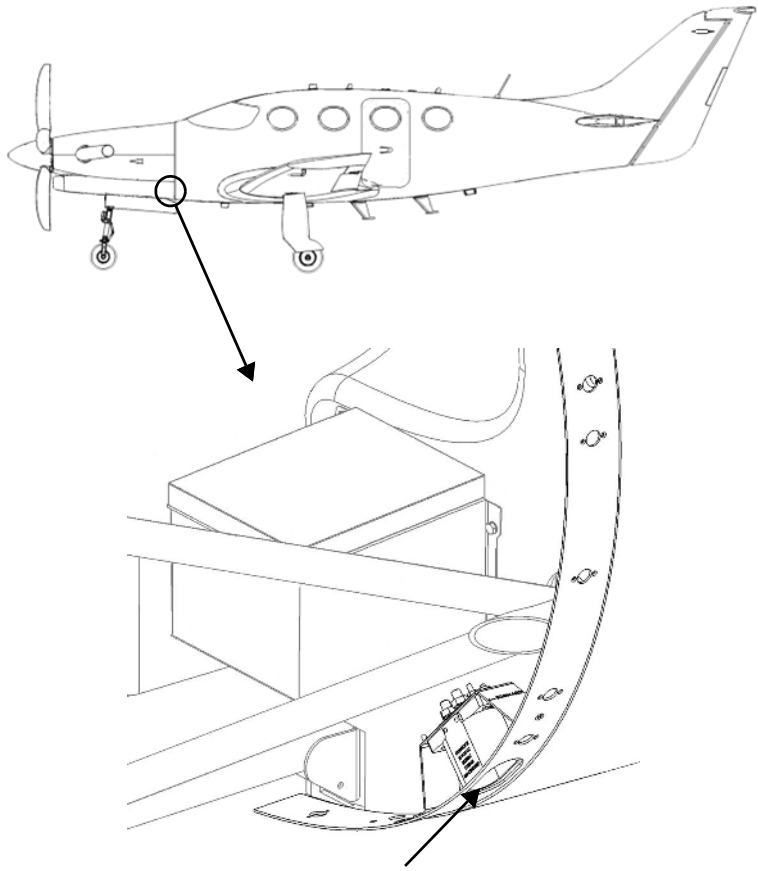

Ground Power Receptacle
(Cowling not shown for clarity.)

8.9 CLEANING

8.9.1 ADVISORY ICE DETECTOR

1. Clean the advisory ice detector with a lint-free microfiber cloth and clean water.

NOTE

Cleaning the advisory ice detector with power applied can cause the ICE CAS message to appear. Make sure the CAS message can be cleared. Cleaning may be performed during the preflight inspection to verify ice detector operation.

8.9.2 WINDSHIELD AND WINDOWS

1. Clean the acrylic windshield and windows using only clean water, mild non-detergent soap and acrylic cleaner.

CAUTION

DO NOT USE ANYTHING CONTAINING AMMONIA, HOUSEHOLD WINDOW CLEANERS, PETROLEUM BASED SOLVENTS, GASOLINE, ACETONE, BENZENE, CARBON TETRACHLORIDE, FIRE EXTINGUISHER SOLUTIONS, OR DE-ICING FLUID TO CLEAN THE ACRYLIC WINDSHIELD AND WINDOWS. THE USE OF THESE MATERIALS MAY CAUSE THE SURFACE OF THE WINDSHIELD OR WINDOW TO FOG OR CRAZE.

CAUTION

DO NOT USE ANY TYPE OF PAPER TOWEL TO CLEAN OR DRY THE ACRYLIC WINDSHIELD OR WINDOWS.

1. Remove any grease or oil using a clean cotton cloth saturated with kerosene followed by a thorough rinse using clean water.
2. Remove dust and contaminants using a rinse of clean water or a mild dish soap solution. Let accumulations of dirt soak for a few minutes then rinse using clean water. Avoid touching the window, unless required to remove persistent contamination.
3. Dry the window using a clean cotton cloth, clean chamois, or lint-free microfiber towel.

NOTE

Lint-free microfiber towels recommended for all cleaning.

NOTE

Prist Window Cleaner recommended for initial cleaning followed by DAM Window Cleaner.

1. Polish the windshield and windows using approved polish in accordance with the polish manufacturer’s instructions.

PILOT'S OPERATING HANDBOOK
AND
FAA APPROVED
AIRPLANE FLIGHT MANUAL
SUPPLEMENT

for

Garmin Emergency Autoland (EAL)

When the Garmin EAL system is installed, this Supplement is applicable and must be inserted in the Supplements Section, (Section 9) of the Epic Aircraft AX Pilot's Operating Handbook and FAA Approved Airplane Flight Manual (POH/AFM). Information in this supplement adds to, supersedes, or removes information in the basic POH/AFM.

FAA Approved_____ FTE, AIR-713 *for*,
Manager, Flight Test & Human Factors Branch, AIR-710
Federal Aviation Administration

Approved Date: 03 September 2026

Log of Revisions			
Revision	Date	Description of Revisions	Approval
Initial Release	03 Sept 2026	Initial Release	Michael Magers FTE, AIR-713

SECTION 1 - GENERAL

This airplane is equipped with Garmin Emergency Autoland (EAL).

Refer to the Garmin G1000 NXi Pilot's Guide for the Epic E1000 AX (p/n 190-03268-XX, where X can be any digit from 0 to 9) for full operational procedures and description of implemented modes.

SECTION 2 - LIMITATIONS

2.1 EMERGENCY AUTOLAND (EAL)

The Emergency Autoland system is for emergency situations only and must not be used when the pilot is able to land the aircraft.

SECTION 3 - EMERGENCY PROCEDURES

3.1 EMERGENCY AUTOLAND – ACTIVATION

1. AUTO-LAND Switch ..... PRESS & RELEASE

3.2 EMERGENCY AUTOLAND – DEACTIVATION

1. Control Yoke ..... GRASP AND MAINTAIN CONTROL
2. AP/TRIM DISC ..... PRESS & RELEASE
3. AUTO-LEVEL Switch ..... PRESS & RELEASE
4. DISPLAY BACKUP Switch ..... PRESS & RELEASE TO ENTER REVERSIONARY MODE

NOTE

Reversionary mode allows pilots to reference the engine instrument display on the PFDs.

5. Power ..... AS REQUIRED
6. Flaps Switch ..... MATCH TO FLAPS POSITION
7. *If* **FLAPS SWITCH POS** *Caution is displayed:*
   a. TRIM RESET Switch ..... PRESS & RELEASE
8. Flaps Switch ..... AS REQUIRED
9. Landing Gear Control ..... MATCH TO GEAR POSITION, THEN AS REQUIRED
10. COM Radio ..... TRANSMIT INTENTIONS
11. Transponder Code ..... AS REQUIRED
12. Flight Plan ..... AS REQUIRED
13. Altimeters ..... AS REQUIRED
14. Altitude Preselect ..... AS REQUIRED
15. Autopilot ..... AS REQUIRED
16. Autothrottle ..... AS REQUIRED

- PROCEDURE CONTINUES ON NEXT PAGE -

When MFD switches from EAL to Reversionary mode (approx. 60 seconds):

17. DISPLAY BACKUP Switch ..... PRESS & RELEASE TO EXIT REVERSIONARY MODE

18. **EAL CANCELED** Advisory..... ACKNOWLEDGE

Amplification

Once activated, the Emergency Autoland system will reconfigure the aircraft to perform an emergency landing. After deactivating the EAL system, the pilot must reconfigure the aircraft systems to continue normal flight.

After deactivating EAL, engaging the AFCS Level Mode with the AUTO-LEVEL switch allows the pilot to more fully concentrate on restoring the rest of the G1000 NXi to normal operation.

To restore the Flaps and Landing Gear to operation, refer to FLAPS SWITCH POS (3A.1.2) and GEAR SWITCH POS (3A.1.3).

After deactivating EAL, the MFD display will remain in the EAL mode for 60 seconds. Using Reversionary mode during that time ensures the pilot can view the engine instrument indications on the PFDs. After the 60 seconds is over, the MFD display will switch from EAL to Reversionary mode, which can then be exited to resume normal display functionality.

3.3 WARNING (RED) CAS MESSAGES — IN FLIGHT

3.3.1 INACTIVITY

INACTIVITY

Conditions:

- **INACTIVITY** caution CAS message displayed without pilot or copilot inputs for more than 30 seconds

1. Acknowledge the warning to reset the inactivity timer.

SECTION 3A - ABNORMAL PROCEDURES

3A.1 CAUTION (AMBER) CAS MESSAGES — IN FLIGHT

3A.1.1 EAL ACTIVATING

EAL ACTIVE IN *[seconds]*

EAL ACTIVATING

"EMERGENCY AUTOLAND ACTIVE IN *[SECONDS]*"

"EMERGENCY AUTOLAND ACTIVATING"

Conditions:

- EAL activation countdown has started, after which Emergency Autoland will take control and declare an emergency.

❖ *IF EAL ACTIVATION IS NOT DESIRED:*

1. Control Yoke ..... GRASP AND MAINTAIN CONTROL
2. AP/TRIM DISC Switch .....PRESS & RELEASE
3. Autopilot ..... AS REQUIRED

NOTE

Before reengaging AP and/or AT, check that AFCS modes are correct.

4. **EAL CANCELED** Advisory .....ACKNOWLEDGE
5. *If the EAL activation is believed to result from an EAL system malfunction or an unruly passenger:*
   a. Disable EAL on the MFD: *Aux > System Setup > Setup 2 > Autoland > Disable*

❖ *IF EAL ACTIVATION IS DESIRED:*

1. Wait for the EAL ACTIVATING countdown to complete.
2. Follow instructions on MFD.

NOTE

The EAL ACTIVE IN [seconds] caution CAS will display at 30, 20, 10, 5, 4, 3, 2, and 1 seconds before EAL activation. An aural countdown will occur at the same intervals.

3A.1.2 FLAPS SWITCH POS

FLAPS SWITCH POS

Conditions:

- EAL has been activated then canceled after the EAL system has changed the flap position.
- The flaps switch and flaps position do not agree.

1. *If flaps in UP, T/O, or FULL position:*
   a. FLAPS Switch .....MATCH TO FLAPS POSITION

- PROCEDURE CONTINUES ON NEXT PAGE -

2. *If flaps position is in transition:*

   a. FLAPS Switch .....T/O

3. TRIM RESET Switch ..... PRESS & RELEASE

4. FLAPS Switch .....AS REQUIRED

3A.1.3 GEAR SWITCH POS

GEAR SWITCH POS

Conditions:

- EAL has been activated then canceled after the EAL system has changed the landing gear position, and
- The landing gear switch and landing gear positions do not agree.

1. LANDING GEAR Control ..... DOWN

2. LANDING GEAR Control.....AS REQUIRED

3A.1.4 INACTIVITY

INACTIVITY

Conditions:

- **INACTIVITY** advisory CAS message has been displayed with no pilot or copilot control inputs for more than 1 minute.

1. Acknowledge the caution to reset the inactivity timer.

SECTION 4 - NORMAL PROCEDURES

4.1 BEFORE STARTING ENGINE

Amplification

A passenger preflight briefing of the Emergency Autoland system should include, at a minimum, the following information:

- What the system is intended to do, e.g.:
  - Performs a fully-automated, survivable landing at the nearest suitable airport in case of pilot incapacitation.
  - Shuts down the engine after coming to a stop.
- It is an emergency system and activation is prohibited during all ground and normal flight operations.
- How to activate the system via the AUTO-LAND switches.
- Follow the information and instructions presented on the Garmin displays, such as keeping your hands and feet away from the aircraft controls.
- After an emergency autoland event, leave the Emergency Autoland system ON for first responders to deactivate when ready to move the airplane to a safe location.

4.2 TAXI

1. TAXI Light ..... ON
2. BRAKE HOLD Switch ..... ON
3. BRAKE HOLD Advisory CAS ..... CONFIRM
4. PROP Lever ..... MAX RPM
5. COND Lever ..... HIGH
6. BRAKE HOLD Switch ..... OFF
7. Brakes ..... CHECK
8. Flight Instruments ..... CHECK
9. Standby Instrument ..... AGREES WITH PFD

NOTE

After the Brake Hold system is engaged with the pilot's feet off the brake pedals, the aircraft should remain in position with the propeller unfeathered at high idle.

WARNING

FAILURE OF THE AUTOMATIC BRAKING SYSTEM WILL DEGRADE EMERGENCY AUTOLAND SYSTEM PERFORMANCE AND MAY RESULT IN DAMAGE TO THE AIRFRAME OR INJURY TO THE OCCUPANTS.

4.3 ADVISORY (WHITE) CAS MESSAGES

4.3.1 EAL CANCELED

EAL CANCELED

"EMERGENCY AUTOLAND CANCELED"

Conditions:

- EAL activation has been canceled

1. No action necessary.

4.3.2 EAL FAIL

EAL FAIL

Conditions:

- EAL is unavailable due to a failed Autothrottle, Automated Brake, or Autopilot component.

1. No action necessary.

4.3.3 EAL OFF

EAL OFF

Conditions:

- EAL has been disabled in the MFD System Setup page.

1. No action necessary.

4.3.4 INACTIVITY

INACTIVITY

Conditions:

- No pilot or copilot inputs for more than 20 minutes

1. Acknowledge the advisory to reset the inactivity timer.

SECTION 5 - PERFORMANCE

No change.

SECTION 6 - WEIGHT AND BALANCE

No change.

SECTION 7 - DESCRIPTION

7.1 EMERGENCY AUTOLAND (EAL)

The Emergency Autoland (EAL) system is designed to safely land the airplane in the event of pilot incapacitation. Once activated, it performs the following:

- Declares the emergency and provides periodic status updates over both COM radios;
- Selects the closest suitable airport;
- Navigates via the most direct route possible while avoiding terrain and undesirable weather (if weather information is available for use); and
- Lands the airplane, brings it to a stop, and shuts down the engine.

Automatic control of the landing gear, flaps, de-ice systems, lights, and fuel selector during Emergency Autoland is powered from the AUTOLAND circuit breaker.

Emergency Autoland evaluates runway length, width, elevation, gradient, terminal area weather, time to destination, and aircraft fuel state to select a destination.

Emergency Autoland uses METAR data in determining destination suitability. If METAR data is unavailable, the system may select a less suitable destination.

Emergency Autoland uses NEXRAD weather information to route around weather. If NEXRAD data is unavailable, the system will be unable to route around weather.

For more information about Emergency Autoland, refer to the Garmin G1000 NXi Pilot's Guide.

WARNING

EMERGENCY AUTOLAND ASSUMES A FULLY FUNCTIONAL AIRPLANE IN ORDER TO OPERATE PROPERLY, AND IS NOT DESIGNED TO MITIGATE SYSTEM FAILURES. ANY SYSTEM FAILURE THAT PREVENTS THE AFCS OR ENGINE FROM FUNCTIONING, OR THE FMS FROM NAVIGATING, WILL PREVENT EMERGENCY AUTOLAND FROM FUNCTIONING. OTHER FAILURES INCLUDING (BUT NOT LIMITED TO) FLAPS, LANDING GEAR, OR RADAR ALTIMETER WILL DEGRADE SYSTEM PERFORMANCE, AND MAY RESULT IN DAMAGE TO THE AIRFRAME AND POSSIBLE INJURY TO THE OCCUPANTS.

Because of these limitations, EAL should only be activated in a true pilot incapacitation emergency. Do not allow the presence of the system to influence your operational decision making, for example, attempting a flight into weather that you would not otherwise attempt if the EAL system were not installed.

NOTE

EAL will not be available if the autopilot has failed.

EAL can be requested by the following manual or automatic methods:

1. Manually pressing one of three AUTO-LAND switches.
2. Automatically after pilot inactivity has been detected.
3. Automatically after Emergency Descent Mode has been triggered and pilot inactivity is subsequently detected.
4. Automatically after ESP automatically engages Level Mode.

Passengers can request EAL through one of three AUTO-LAND switches in the airplane. One is on the right side of the instrument panel above the flap switch, and two are located above the mid and aft row passenger seats in the cabin overhead. If the autopilot is not engaged when an AUTO-LAND switch is pressed, the AFCS will automatically enter Level Mode.

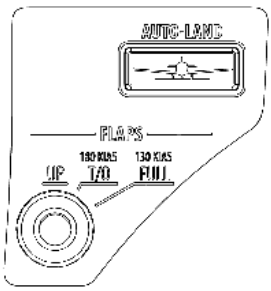

Cockpit AUTO-LAND Switch

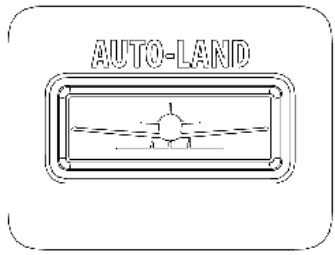

Cabin AUTO-LAND Switch (Typical)

In the event of pilot inactivity, the **INACTIVITY** advisory, **INACTIVITY** caution, and **INACTIVITY** warning CAS messages will illuminate after 20 minutes, 21 minutes, and 21 minutes and 30 seconds, respectively. An INACTIVITY CAS message will be cleared and the inactivity timer will be reset if the pilot acknowledges the CAS message. If the pilot does not acknowledge the **INACTIVITY** warning within 10 seconds, EAL will be requested automatically.

If EDM is active and no pilot activity has been detected for more than 1 minute after the airplane levels off at the bottom of the emergency descent, EAL will be requested automatically.

If ESP engages AFCS Level Mode and it remains engaged for more than 2 minutes, EAL will be requested automatically.

When EAL is requested (either manually or automatically), a 30-second countdown starts. This allows time for pilots to cancel the EAL request before the system activates. During this countdown, the **EAL ACTIVATING** caution CAS message is annunciated at 30, 20, 10, 5, 4, 3, 2, and 1 seconds, alerting the crew that EAL activation is imminent. At the conclusion of the countdown, EAL activation will commence. The pilot may cancel the EAL request countdown by pressing the AP/TRIM DISC switch. After cancellation, the **EAL CANCELED** advisory CAS message will be displayed.

NOTE

If the autopilot was engaged prior to requesting EAL, the pilot must manually reengage the autopilot after pressing the AP/TRIM DISC switch to cancel the EAL countdown.

EAL will not activate if:

- The EAL system can not determine the flap position; or
- The right weight-on-wheels switch is in the on-ground configuration; or
- The GPS altitude is below 200’ AGL; or
- The EAL system has been disabled by the pilot, indicated by the **EAL OFF** advisory CAS message; or
- A component required for EAL operation is failed, indicated by the **EAL FAIL** advisory CAS message.

EAL can be deactivated by:

- Pressing and releasing the AP/TRIM DISC switch; or
- Disabling the EAL system on the MFD AUX page, or
- Turning the BATT switches OFF (on-ground only).

CAUTION

DEACTIVATING THE EMERGENCY AUTOLAND SYSTEM ON THE GROUND WILL RELEASE THE BRAKES.

After EAL system deactivation, the flaps and/or landing gear will be disabled until their respective control switches are matched to their current condition, and in the case of the flaps the system is reset. Out-of-position control switches are indicated by the **FLAPS SWITCH POS** and/or **GEAR SWITCH POS** caution CAS messages, respectively. To restore control of the flaps, either press and release the TRIM RESET switch on the pilot yoke or wait five minutes. To restore control of the landing gear, match the Landing Gear Control to the current position of the landing gear.

SECTION 8 - HANDLING, SERVICING, AND MAINTENANCE

8.1 POST-EAL LANDING AIRCRAFT RECOVERY AND INSPECTION

CAUTION

THE AUTOMATED BRAKING SYSTEM WILL NOT OPERATE WITH POWER OFF. MAKE SURE THE AIRPLANE HAS BEEN CHOCKED.

NOTE

After an EAL landing has occurred, a video will instruct the first responders on how to reconfigure the airplane and turn power off. The following procedures are provided to confirm the airplane has been reconfigured correctly.

- *IF AIRCRAFT POWER IS ON:*

  1. Follow the airplane recovery instruction video playing on the MFD.

- *IF AIRCRAFT POWER IS OFF:*

  1. LANDING GEAR Control ..... DOWN
  2. FLAPS Switch ..... SET TO CURRENT FLAPS POSITION
  3. LIGHTS Switches ..... ALL OFF
  4. ICE Switches ..... ALL OFF
  5. SYSTEMS Switches ..... ALL OFF
  6. PRE-TAXI Switches ..... ALL OFF
  7. PRE-START Switches ..... ALL OFF

  NOTE

  While aircraft power is off, the switches will not have ON indication lights. Determine the position of each switch physically to ensure it is in the OFF position.

  8. *If a different flaps position is desired:*
     a. BATT 1 and BATT 2 Switches ..... ON
     b. FLAPS Switch ..... AS DESIRED
     c. BATT 1 and BATT 2 Switches ..... OFF

- *IF A RUNWAY EXCURSION HAS OCCURRED:*

  1. Inspect the tires and landing gear in accordance with the Aircraft Maintenance Manual for the Epic E1000, PN SK05000000.