Service Bulletin SB-0070

Epic Aircraft, LLC ◆ 22590 Nelson Road ◆ Bend OR 97701
Phone: 541-318-8849 ◆ Fax: 541-382-5125 ◆ Web: www.epicaircraft.com

Subject: Emergency Autoland Retrofit

ATA-Code: 22-00

Labor: 4 Hours

Effectivity: K086 and On

Affected Model(s): E1000 AX

Due: At the owner's discretion.

Compliance: Recommended

Recurrence: No

1 BACKGROUND AND PURPOSE:

This Service Bulletin provides instructions to retrofit the Garmin Emergency Autoland (EAL) system on applicable E1000 AX aircraft.

2 REFERENCES:

- Garmin G1000 NXi Integrated Avionics System Line Maintenance Manual, P/N 190-02330-02.
- Epic E1000 Aircraft Maintenance Manual, P/N SK05000000.

3 WARRANTY:

For aircraft under warranty, parts and labor will be covered by Epic Aircraft, LLC if the work is performed within the compliance period and at an Authorized E1000 Service Center.

4 APPROVAL:

The engineering aspects of this service document have been shown to comply with the applicable Federal Aviation Regulations and are FAA approved.

5 REVISION:

A:

- Updated labor hours to 4.
- Updated E-Checklist loading procedure.
- Added step to record and update engine cycles.
- Added step to record and retain SYSTEM SETUP information.
- Added step to verify and re-enter SYSTEM SETUP settings after software loading.
- Updated access and closeout steps.
- Updated document updates steps.

6 TOOLS:

No.	Description	Qty	Epic Aircraft Supplied	Customer Supplied
1.	Basic Hand Tools	A/R	☐	☒

7 PARTS/MATERIALS:

No.	Part Number	Description	Qty	Epic Aircraft Supplied	Customer Supplied
1.	PK99008404 Or PK99390010	Light Plate, Flaps, Auto-Land Light Plate, Flaps, EAL, IP	1	☒	☐
2.	AK25223423	Emer. AL Button, Bucket Assembly, Overhead Console	2	☒	☐
3.	AK25223427	Harness Assembly, Emer. Autoland Button, Pax	2	☒	☐
4.	NAS620C6	Washer, Reduced, O.D., Cres, .143 I.D., .267 O.D.	8	☒	☐
5.	NAS1352-06-5P	Screw, Socket Head .138-32 x .313	8	☒	☐
6.	MS21083N3	Nut, Self-Locking, Non-Metallic Insert 10-32	6	☒	☐
7.	NAS1149F0316P	Washer, Flat #10x .016	6	☒	☐
8.	010-00330-LQ	GX000, EAL Enablement Card	1	☒	☐
9.	006-B5204-00	Baseline Loader Card	1	☒	☐
10.	SK05003001	POH/AFM, Pilot's Operating Handbook and Flight Manual, Replacement Pages (Refer to Table 1)	1	☒	☐
11.	SK05001503	POH & AFM Supplement for Garmin EAL	1	☒	☐
12.	190-03269-01	E1000 NXi Cockpit Reference Guide for Epic E1000 AX	1	☒	☐
13.	190-03268-01	G1000 NXi Pilot's Guide for the Epic E1000 AX	1	☒	☐
14.	E1000-003 Rev A	E1000AX Electronic Checklist Software	1	☒	☐

Epic Aircraft, LLC ◆ 22590 Nelson Road ◆ Bend OR 97701
Phone: 541-318-8849 ◆ Fax: 541-382-5125 ◆ Web: www.epicaircraft.com

8 INSTRUCTIONS

8.1.1 EAL Overhead Bucket Assembly Installation

CAUTION

READ ALL INSTRUCTIONS BEFORE BEGINNING ANY WORK.

CAUTION

ENSURE ALL STANDARD ENABLEMENT CARDS AND REQUIRED OPTIONAL ENABLEMENT CARDS PROVIDED UPON INITIAL DELIVERY ARE AVAILABLE BEFORE PROCEEDING. DO NOT BEGIN THE FOLLOWING STEPS UNLESS THE RETROFIT AND SOFTWARE LOADING PROCESSES CAN BE COMPLETED WITHOUT INTERRUPTION.

Note:

The removal and installation procedure is the same for both cabin EAL switches.

1. Set the BATT 1 and BATT 2 switches to off.
2. Disconnect external electrical power from the aircraft (refer to Epic E1000 Aircraft Maintenance Manual, P/N SK05000000, chapter 24-40).
3. Install protection on interior trim and seats as needed.
4. Remove the MID ROW and AFT oxygen mask covers (refer Figure 1).
5. Remove overhead finish panels (refer to Epic E1000 Aircraft Maintenance Manual, P/N SK05000000 chapter 25-20).
6. Remove the forward Autoland bucket close-out assembly.
    a. Remove the (3x) nuts and (3x) washers connecting the FWD Autoland bucket close-out assembly to the overhead console.
    b. Remove the bucket close-out assembly.
7. Repeat step 6 for the AFT Autoland bucket close-out assembly.
8. Install overhead console bucket assemblies AK25223423 (refer to Figure 2).
    a. Install FWD Autoland bucket assembly with (3x) MS21083N3 nuts and (3x) NAS1149F0316P washers.
    b. Connect J755 of the FWD EAL harness assembly to 1P755 of the main cabin overhead lighting harness assembly.

c. Install AFT Autoland bucket assembly with (3x) MS21083N3 nuts and (3x) NAS1149F0316P washers.
d. Connect J755 of the AFT EAL harness assembly to 2P755 of the main cabin overhead lighting harness assembly.

9. Install the overhead finish panel (refer to Epic E1000 Aircraft Maintenance Manual, P/N SK05000000 chapter 25-20).
10. Install the MID ROW and AFT oxygen mask covers (refer to Figure 1).

8.1.2 EAL Switch and Flap Light Plate Installation

1. Remove the switch panel trim.
2. Remove the GDU 1250 Multifunction Display (refer to Epic E1000 Aircraft Maintenance Manual, P/N SK05000000 chapter 34-40).
3. Remove the GCU 477 Flight Management System (FMS) Controller (refer to Epic E1000 Aircraft Maintenance Manual, P/N SK05000000 chapter 34-40).
4. Remove the center display bezel (refer to Epic E1000 Aircraft Maintenance Manual, P/N SK05000000 chapter 25-10).
5. Remove the flaps light plate.
    a. Remove the flap control knob AK39000013 and (2x) MS51965-17 setscrews to the flap switch shaft.
    b. Remove the (3x) NAS1149FN616P washers, (3x) NAS1352-06-6P screws and PK39000023 connector retainer that attach the light plate to the instrument support.
    c. On the back of the light plate, disconnect P535.
    d. Remove the light plate.
6. Install the new EAL light plate (PK99390010 or PK99008404).
    a. On the back of the updated EAL light plate, connect P535.
    b. Install the (3x) NAS1149FN616P washers, (3x) NAS1352-06-6P screws and PK39000023 connector retainer that attach the light plate to the instrument support.
    c. Install the flap control knob AK39000013 and (2x) MS51965-17 set screws to the flap switch shaft.
7. Install the center display bezel (refer to Epic E1000 Aircraft Maintenance Manual, P/N SK05000000 chapter 25-20).
8. Install the GCU 477 Flight Management System (FMS) Controller (refer to Epic E1000 Aircraft Maintenance Manual, P/N SK05000000 chapter 34-40).

9. Install the GDU 1250 Multifunction Display (refer to Epic E1000 Aircraft Maintenance Manual, P/N SK05000000 chapter 34-40).

8.1.3 Record Engine Cycles

CAUTION

THE SOFTWARE LOADING PROCEDURE WILL RESET THE ENGINE-CYCLE COUNT TO ZERO. MAKE SURE TO RECORD THE EXISTING VALUES BEFORE PROCEEDING WITH THE SOFTWARE LOAD.

1. Record the current engine-cycle count before proceeding with this service bulletin.
   a. Put the system in Configuration Mode.
   b. On the GDU page group, select Reset Blob Counters.
   c. Record the values in Engine Cycle Starts, Engine Cycle Flights, and incr_eng_1_cycle_count.

8.1.4 Uploading EAL Software

1. On the MFD, select AUX > SYSTEM SETUP > SETUP 1. Record the current settings by taking clear photographs of all displayed settings. Repeat for SETUP 2 tab.
2. Repeat step 1 for all Profiles.

Note:

Retain the recorded settings for verification after completing the software loading procedure.

3. Display Software Loading (refer to Epic E1000 Aircraft Maintenance Manual, P/N SK05000000 chapter 39-11).
4. Load Baseline Software and Configuration (refer to Epic E1000 Aircraft Maintenance Manual, P/N SK05000000 chapter 39-11).
5. Load Optional Equipment Software and Configuration (refer to Epic E1000 Aircraft Maintenance Manual, P/N SK05000000 chapter 39-11).

Note:

Do **not** load calibration options.

6. Enablement Cards:

Note:

Once an enablement card is utilized for a particular installation the card becomes locked to the system ID for that aircraft. The enablement cards must be retained for that aircraft, should there be a need to enable the feature again.

a. Insert the enablement card for the 010-00330-LQ Emergency Autoland Enablement card in the top slot of PFD1.
b. Power up the system in configuration mode. PFD1 displays the SYSTEM UPLOAD page.
c. Press the small FMS knob. “SD CARD” is highlighted in the CARD window.
d. Press ENT. Turn the small FMS knob. The option to be enabled is highlighted in the GROUP window.
e. Press the ENT key. The ENTRIES window populates with software and configuration.
f. Press the CHK All Softkey.
g. Select the “Load” softkey.

Note:

Do not cancel a load in progress. If a failure occurs, wait until the fail message appears before proceeding.

h. Monitor the status of the load. When the load is finished, press ENT to acknowledge.
i. View the SUMMARY field to ensure that all items are complete. Verify the PASS appears in green at the check boxes.
j. Press the “UPDT CFG” softkey to update the configuration module.

7. Enablement Card Options (SD card supplied upon delivery of aircraft).

a. Load the following enablement cards:

Table 1: E1000 Enablement Cards

Description	P/N	Standard/Optional
SD Card, GDU1xxx SVS Unlock, 2 PFDs	010-03905-E0	Standard
SD Card, GIFD SurfaceWatch Enable		
SD Card, GDU1XXX Enhanced AFCS Unlock		
SD Card, GDU10xx Chart Unlock, Heavy AC		
SD Card, Auto Throttle Integration		

SD Card, GDU10xx TAWS Unlock	010-03905-04	Optional
SD Card, GDU1XXX TAS to TCAS I Enablement	010-00330-A1	Optional
SD Card, GX000, Taxiway Routing Enablement SysRel 7.51+	010-03905-18	Optional
SD Card, GX000, GWX Processor Automode LH, GCS TD Enablement	010-00330-JA	Optional
SD Card, GX000, GWX Ground Clutter Enablement		
SD Card, GX000, GWX Turbulence Detection Enablement		

Table 2: E1000 AX Database Cards

Description	P/N	Standard/Optional
Integrated Avionics – NavData Starter Kit for Jepp Databases	010-11093-00	Optional
SD Card, GIFD, Supp DBs, IFR/VFR Charts, black	010-00474-50	Optional

Note:

Enablement cards are locked to the system ID for that aircraft. The enablement cards must be retained for that aircraft, should there be a need to enable the feature again.

b. Insert the enablement card for the desired feature in the top slot of PFD 1.
c. Power up the system in configuration mode. PFD 1 displays the SYSTEM UPLOAD page.
d. Press the small FMS knob. “SD CARD” is highlighted in the CARD window.
e. Turn the small FMS knob. “SD CARD” is highlighted in the small window.

f. Press ENT. Turn the small FMS knob. The option to be enabled is highlighted in the GROUP window.

g. Press the ENT key. The PRODUCT window populates with software and configuration.

h. Press the CHK All Softkey.

i. Select the “Load” softkey.

Note:

Do not cancel a load in progress. If a failure occurs, wait until the fail message appears before proceeding.

j. Monitor the status of the load. When the load is finished, press ENT to acknowledge.

k. View the SUMMARY field to ensure that all items are complete. Verify the PASS appears in green at the check boxes.

l. Press the “UPDT CFG” softkey to update the configuration module.

8. Load the EAL Language Option.

Note:

The English language option is loaded by default with the baseline load. If English is the desired language, and another language option has not been loaded, this section does not apply.

Note:

Make sure the 006-B5204-00 SD card is still installed.

a. Ensure the system is in configuration mode on the SYSTEM UPLOAD Page.

b. Press the FMS knob on PFD 1. “E1000 Baseline” is highlighted in the GROUP window.

c. Turn the large FMS knob on PFD 1. “E1000 Baseline” is highlighted in a small window.

d. Turn the small FMS knob until “EAL Languages” is highlighted.

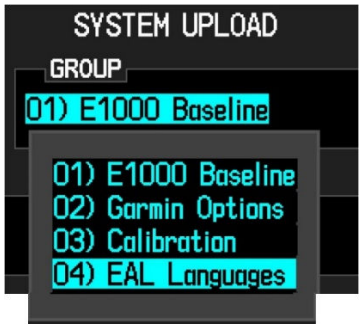

e. Press ENT. Verify that the OPTION window is displayed. Turn the small FMS knob. A small window is displayed showing the possible options.



f. Highlight the desired language option and press the ENT key. The ENTRIES window fills with software and configuration.

g. Press the CHK All Softkey.

h. Press “Load” at the bottom of PFD1. All software and configuration for the option starts loading.

i. Verify “Crossfill was completed” in the progress window.

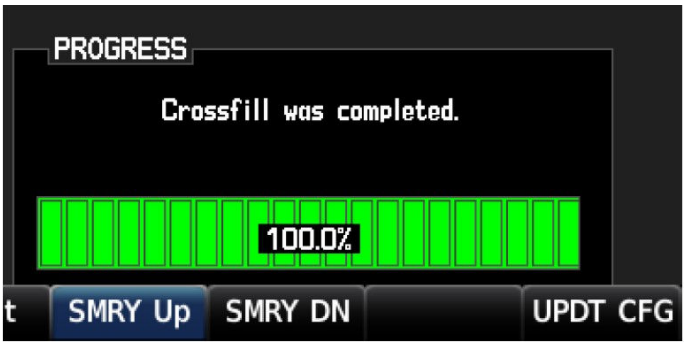

j. View the SUMMARY field and ensure that all items are complete. Verify that PASS appears in green at the check boxes.

k. Press the “UPDT CFG” softkey to update the configuration module.

9. Aircraft Registration Number Entry (refer to Epic E1000 Aircraft Maintenance Manual, P/N SK05000000 chapter 39-11).

10. GTX Cable Loss:

a. Start this procedure with the system in Configuration Mode.

b. Use the FMS knob to select the GTS Configuration Page, which is located in the GTS page group.

c. Verify that the TOP ANT CBL LOSS field is set to 2.8dB.

d. Using the FMS knob select the TOP ANT CBL LOSS field and change it to 1.8dB.

11. Enter the current engine-cycle counts noted in step 8.1.3.

a. On the GDU page group, select Reset Blob Counters.

b. Select Engine Cycle Starts.

i. When the password prompt appears, enter: EPICM.

ii. Enter the value noted in step 8.1.3.

c. Select Engine Cycle Flights, enter the value noted in step 8.1.3.

d. Select incr_eng_1_cycle_count, enter the value noted in step 8.1.3.

12. Update the Configuration Module.

a. Select the System Upload Page on PFD1.

b. Press the UPDT CFG softkey at the bottom of the display.

c. 'Update Configuration Module?' is displayed.

d. Press ENT to acknowledge the prompt.

e. The system updates the configuration module located in PFD 1 connector.

13. Confirm Configuration.

a. Select the *Configuration Manager* page on PFD1.

b. Press the CNFM CFG softkey at the bottom of the display.

c. The prompt Confirm Configuration as Expected Configuration appears with OK selected.

d. Press ENT to confirm the configuration.

8.1.5 Load E-Checklist

1. Electronic Checklist File Load Instructions.

Note:

This procedure assumes that all circuit breakers are in and the system is able to power on.

a. Ensure the software SD card is removed.

b. Ensure no power is applied to the G1000 system.

c. Insert an SD card loaded with the Electronic Checklist file (.gcl) and (.sff) in the top slot of the MFD.

d. Apply power to the G1000 system.

e. Ensure the message “DATABASE STANDBY CHECKLIST WILL BE VERIFIED BEFORE USE.” Is shown. Acknowledge by pressing any key or waiting for the countdown to end.

f. Advance past the splash screen by pressing the ENT or the rightmost softkey.

g. Navigate to the Databases page in the Aux Page Group on the MFD.

h. Using the FMS knob, scroll down to the Checklist option and hit the ENT key.

i. Verify the Standby column shows the Checklist to be loaded, with an arrow pointing towards the Active column.

Note:

The correct checklist can be verified by selecting the “Details” soft key. “Epic E1000 AX Rev A – Chklist” should be displayed in the Standby column.

j. Press the “Restart” soft key, then hit “Restart” on the pop-up menu.

k. Once the system has restarted, again navigate to the Databases page in the Aux Page Group.

l. Scroll down to Checklist and hit the “Details” soft key. Verify “Epic E1000 AX Rev A – Chklist” appears in the Active (Expires) column.

Note:

If the restart softkey does not activate the new E-Checklist, cycle the aircraft power and repeat steps j and k.

8.2 Verify System Setup Settings

1. On the MFD, select AUX > SYSTEM SETUP > SETUP 1. As necessary, change the displayed settings to match the photographic record of the settings recorded before the software load in step 8.1.4. Repeat for the SETUP 2 tab.
2. Repeat step 1 for all Profiles.

8.2.1 Perform EAL Operational Check

1. Connect external electrical power to the aircraft (refer to Epic E1000 Aircraft Maintenance Manual, P/N SK05000000, chapter 24-40).
2. Enter Configuration Mode as follows:
   a. Pull the PFD 1, PFD 2 and MFD circuit breakers.
   b. Set the BATT 1 and BATT 2 switches to ON.
   c. Press ENTER on the pilot’s PFD while resetting the PFD 1 circuit breaker.

d. Press ENTER on the co-pilot's PFD while resetting the PFD 2 circuit breaker.
e. Press ENTER on the MFD while resetting the MFD circuit breaker.
f. *INITIALIZING SYSTEM* message should be displayed on all three displays.

3. Using the FMS knob, navigate to the GIA 64x tab on the PFD.
4. Scroll down and select Discrete in Configuration.
5. Make sure *Select Unit* is populated with *GIA 1*.
6. Using the FMS knob, navigate down the *Discrete Input Channel Configuration* page to channel 15A.
7. Press and hold the cockpit AUTO-LAND switch until the Data box is green.
8. Repeat step 7 at the mid-row and aft-row cabin AUTO-LAND switches.
9. Using the FMS Knob, navigate to the *Select Unit* dialog box and select *GIA 2*.
10. Using the FMS knob, navigate to the *Select Unit Channel Configuration* page to channel *3A*.
11. Press and hold the cockpit AUTO-LAND switch until the *Data* box is green.
12. Repeat step 10 at the mid-row and aft-row cabin EAL switches.
13. Set the BATT 1 and BATT 2 switches to OFF.
14. Disconnect external power from the aircraft (refer to Epic E1000 Aircraft Maintenance Manual, P/N SK05000000, chapter 24-40).

8.2.2 Document Updates

1. Provide the owner with the latest revision of the following documents:
   a. SK05001503 POH & AFM Supplement for Garmin EAL.
   b. Garmin Cockpit Reference Guide P/N 190-02290-04 Revision B.
   c. Garmin G1000 NXi Pilot's Guide for the Epic E1000, P/N 190-02290-02.

2. Remove the affected pages from Pilot's Operating Handbook and FAA Approved Aircraft Flight Manual P/N SK05003001, and insert replacement pages provided with this Service Bulletin (refer to Table 1).
3. Insert the Garmin Emergency Autoland Supplement P/N SK05001503 into Section 9 of the Pilot's Operating Handbook and FAA Approved Aircraft Flight Manual P/N SK05003001. Update the Log of Supplements.

I

Epic Aircraft, LLC ◆ 22590 Nelson Road ◆ Bend OR 97701
Phone: 541-318-8849 ◆ Fax: 541-382-5125 ◆ Web: www.epicaircraft.com

9 TABLES AND FIGURES:

Table 1: Pilot's Operating Handbook and FAA Approved AFM for E1000 AX Replacement Pages

Section/ Page	Changes Made
Cover	New Approval
LOEP 1-4	Updated
1-1	Updated
1-11	Updated 1.5.4
1-15	Updated 1.5.9
1-17 thru 1-22	Updated 1.5.10, Pagination Changes
1-24	Updated 1.6.6
1-33	Updated 1.7.8
2-3	Updated 2.2
2-5	Updated 2.3.2
2-9	Updated 2.6.3
2-10	Updated 2.6.6
2-11	Updated 2.6.7.1
2-18	Updated 2.6.11.1
2-33	Updated 2-10
3-10	Updated 3.4.4
3-11	Updated 3.5.1
3-12	Updated 3.5.2
3-16	Updated 3.7.3
3-19	Updated 3.8.1
3-20	Updated 3.8.2
3-21	Updated 3.8.3
3-32	Updated 3.13.1
3-39	Updated 3.17.1
3-43/ 3-44	Corrected Pagination
3-48	Updated 3.17.12
3A-2/ 3A-3	Updated
3A-14	Updated 3A.7.12
3A-16	Updated 3A.7.15
3A-18	Updated 3A.7.19
3A-21	Updated 3A.7.26
3A-26	Updated 3A.8.6

Epic Aircraft, LLC ◆ 22590 Nelson Road ◆ Bend OR 97701
Phone: 541-318-8849 ◆ Fax: 541-382-5125 ◆ Web: www.epicaircraft.com

3A-32	Updated
4-2	Updated
4-5/4-6	Updated 4.3.1
4-11	Updated 4.3.3
4-13	Updated 4.3.4
4-17	Updated 4.3.8
4-25	Updated 4.4.7
4-28	Updated 4.5.4
4-31 thru 4-34	Added 4.6.2 and 4.6.7
5-13	Updated 5.10.1
7-1	Updated
7-20	Updated 7.3.6.1
7-23 thru 7-94	Added 7.3.7, updated 7.4.5 and graphic, updated 7.5 graphic, updated 7.6.3, updated 7.6.4 graphic, updated 7.9.1.1, updated 7.9.2.2 graphic. Pagination changes.
8-1	Updated
8-8	Updated 8.7.3.2
8-11/ 8-12	Updated 8.8.1, 8.9.1, and 8.9.2

Epic Aircraft, LLC ◆ 22590 Nelson Road ◆ Bend OR 97701
Phone: 541-318-8849 ◆ Fax: 541-382-5125 ◆ Web: www.epicaircraft.com

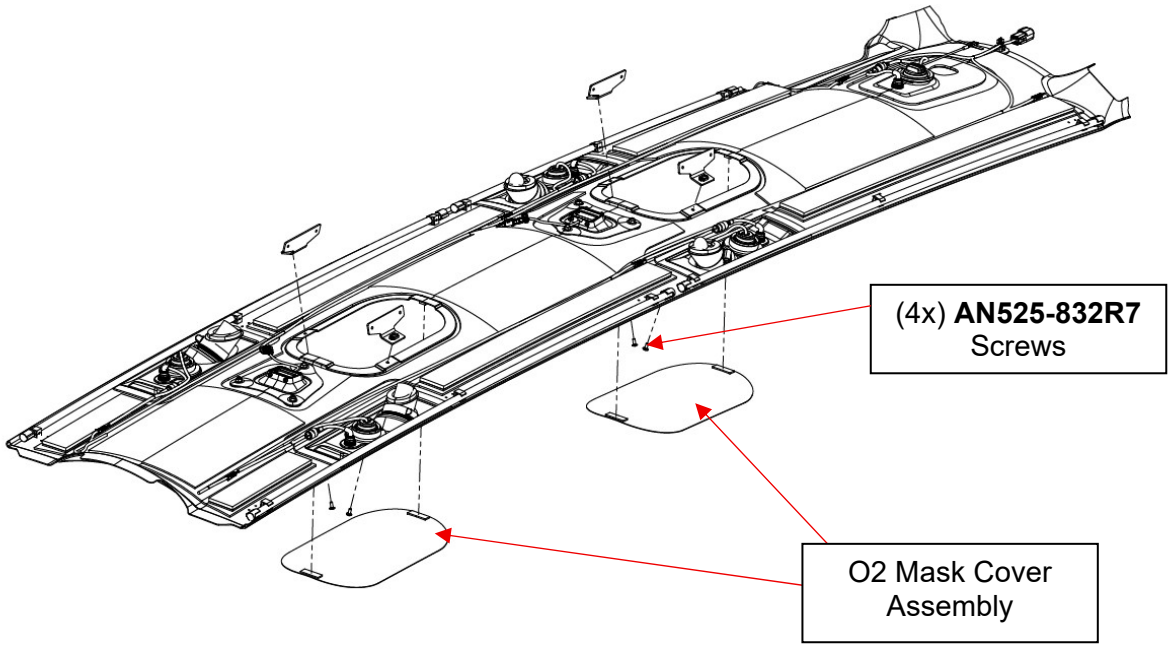

Figure 1: Cabin Overhead Finish Panel

Epic Aircraft, LLC ◆ 22590 Nelson Road ◆ Bend OR 97701
Phone: 541-318-8849 ◆ Fax: 541-382-5125 ◆ Web: www.epicaircraft.com

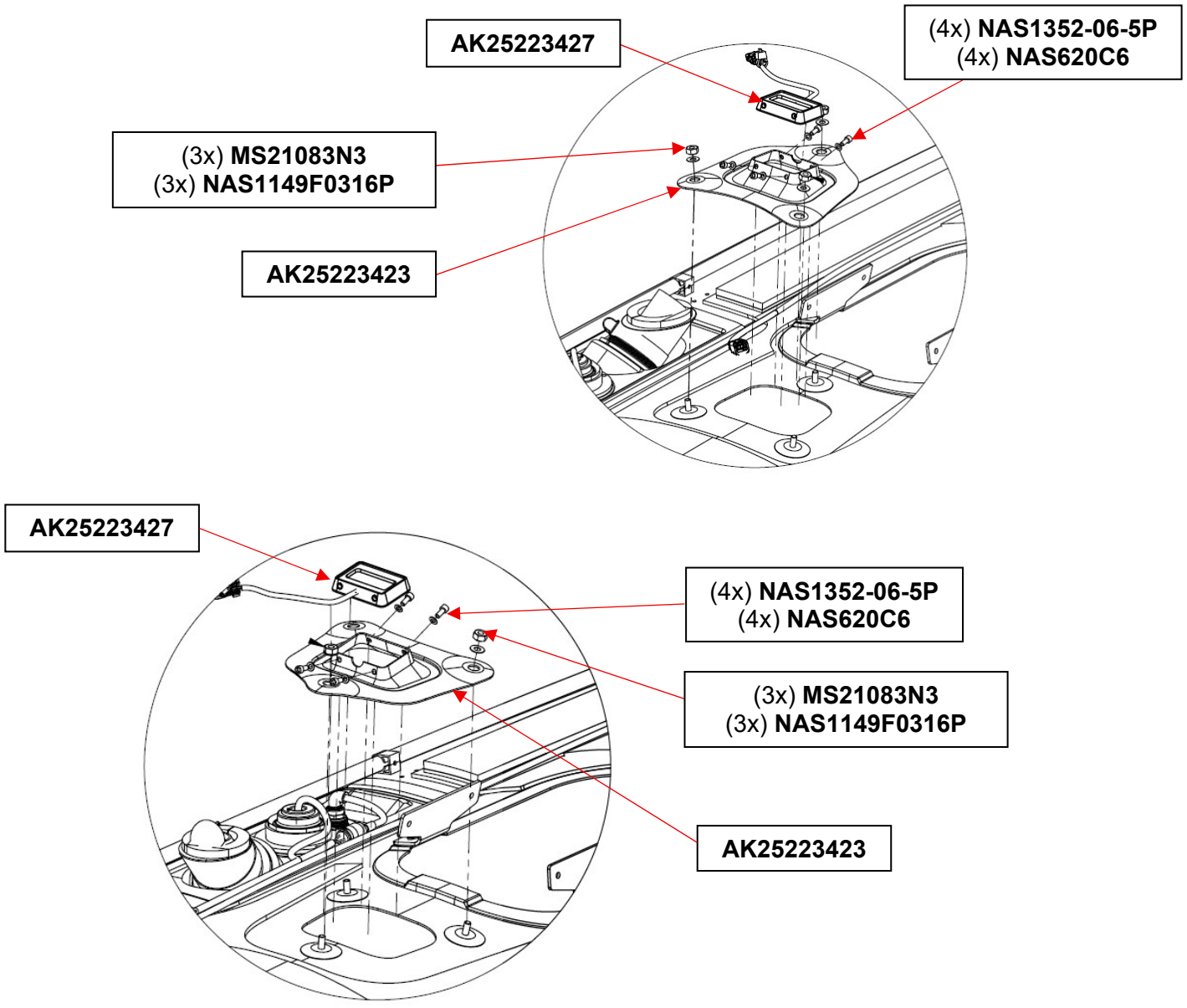

Figure 2: Cabin Emergency Autoland Button Harness Installation

Epic Aircraft, LLC ◆ 22590 Nelson Road ◆ Bend OR 97701
Phone: 541-318-8849 ◆ Fax: 541-382-5125 ◆ Web: www.epicaircraft.com

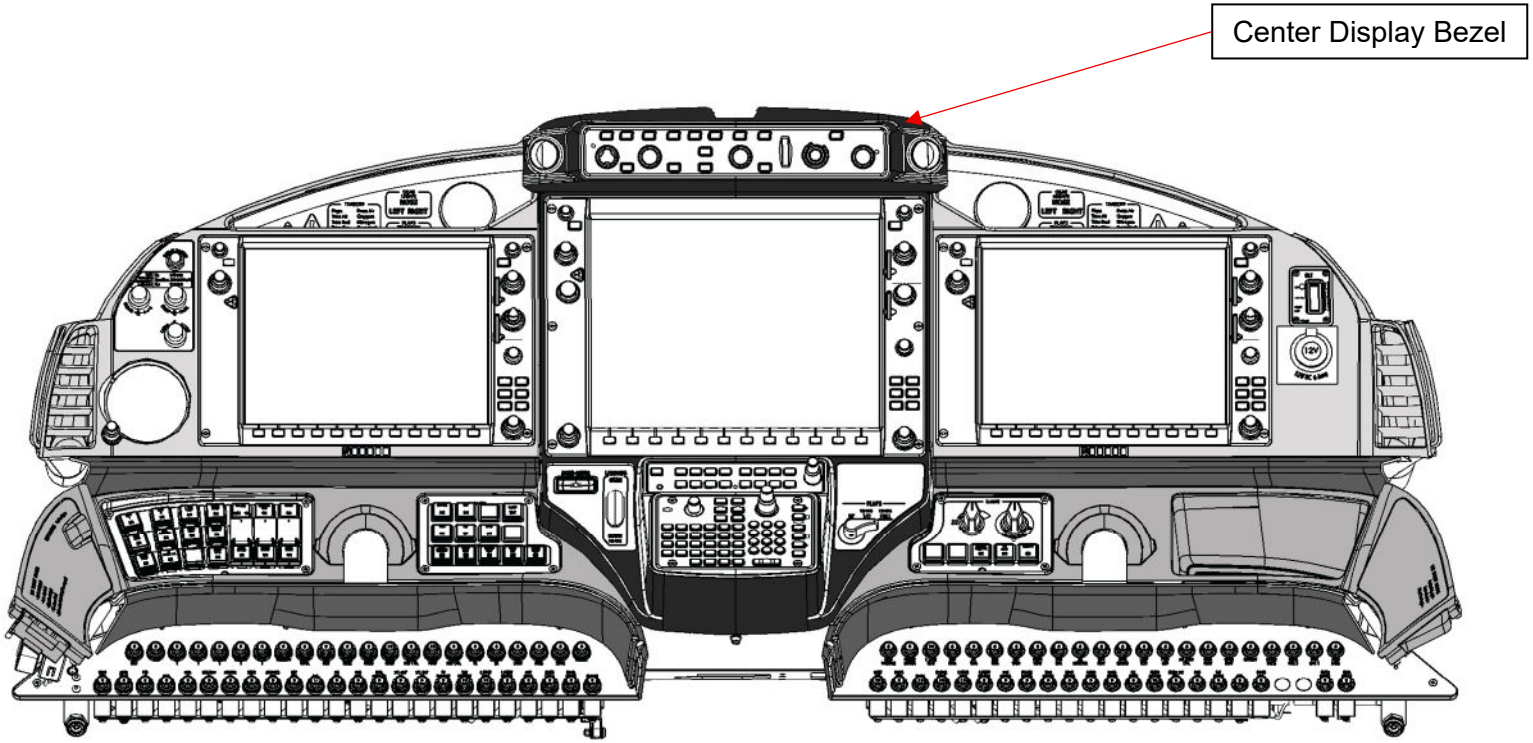

Figure 3: Center Display Bezel

Epic Aircraft, LLC ◆ 22590 Nelson Road ◆ Bend OR 97701
Phone: 541-318-8849 ◆ Fax: 541-382-5125 ◆ Web: www.epicaircraft.com

10 WEIGHT AND BALANCE:

N/A

11 PUBLICATIONS AFFECTED:

- Pilot's Operating Handbook and FAA Approved AFM for E1000 AX, P/N SK05003001.
- Garmin Cockpit Reference Guide P/N 190-02290-04 Revision B.
- Garmin G1000 NXi Pilot's Guide for the Epic E1000, P/N 190-02290-02.
- POH & AFM Supplement for Garmin EAL, P/N SK05001503.

12 RECORD COMPLIANCE:

Make appropriate entry in aircraft maintenance records.

Epic Aircraft, LLC ◆ 22590 Nelson Road ◆ Bend OR 97701
Phone: 541-318-8849 ◆ Fax: 541-382-5125 ◆ Web: www.epicaircraft.com

Appendix A: Compliance Letter

Please complete and mail this form to Customersupport@epicaircraft.com

This is to certify that I have completed the work in accordance with the Epic Aircraft, LLC Service Bulletin.

Aircraft Owner Information:
Date: _____ Aircraft Serial Number: _____ Aircraft Reg. Number: _____ Owner's Name: _____
Maintenance Entity Information
Name of Shop Performing the work: _____ Name of Person(s) Performing inspection and/or work: _____ Phone Number: _____ Email: _____