

AIRCRAFT MAINTENANCE MANUAL

For the

Epic E1000
E1000 GX
E1000 AX

EPIC AIRCRAFT, LLC
22590 Nelson Road
Bend, OR 97701-9710
Phone: (541) 318-8849
Fax: (541) 382-5125

FAA approval has been obtained on the technical data in this publication that affects airplane type design.

COPYRIGHT 2020
Subject to Non-Disclosure Agreement
EPIC AIRCRAFT, LLC BEND, OREGON, USA

P/N SK05000000
ISSUED: 02 Jan 2020

This Page Intentionally Left Blank

Log of Revisions

Revision Number	Issue Date
Original	02 Jan 2020
A	13 Apr 2020
B	11 Nov 2020
C	14 Jul 2021
D	16 May 2022
E	13 Jul 2022
F	19 Jan 2023
G	20 Oct 2023
H	08 Apr 2024
I	10 Jul 2025
J	12 Nov 2025
K	08 Sep 2026

Revision Number	Issue Date

Revision Number	Issue Date

This Page Intentionally Left Blank

Highlights of Revision K

Chapter/ Page No.	Change
1-00 Pg 1	Updated general info section.
5-10 Pg 5, 6	Updated engine mount replacement. Added EAL 1000 hour operational check requirement. Added trailing link lube requirement.
5-20 Pg 4, 17, 18	Added Nose Wheel Centering service procedure requirement. Added Brake Hold test requirement. Added Security Event Log review.
5-30 Pg 2, 5, 6, 8-26	Added the E1000 AX to be eligible for the progressive inspection program. Added Nose Wheel Centering service procedure requirement. Added trailing link lube requirement to Mini Inspection. Added Brake Hold test requirement. Added Security Event Log review. Updated Progressive eligibility wording for clarity. Updated Mini inspection tasks for clarity, and added specific reference to Pratt inspection table.
6-00 Pg 7	Added access panel section title
11-30 Pg 5, 17	Added E-Door handle placard,
12-20 Pg 5-6	Added door pin lube option. Added phase interval to lubrication schedule.
21-20 Pg 16	Updated adhesives.
22-00 Pg 9-12	Added EAL system info and switch procedures.
22-10 Pg 6, 8, 9, 10, 21-26	Updated procedure. Added functional test from 24-00.
22-11 Pg 8-28	Added functional test from 24-00. Updated Bridle cable instructions. Updated servo procedures. Updated pusher cable clamp torque. Removed aircraft leveling requirement from all procedures, updated numbering.
22-30, Page 2-3	Refined a step for the autothrottle servo adjustment. Corrected a value for the AutoThrottle Servo Installation. Updated bridle cable tension.
23-30 Pg 2	Added GDL 69 config check from 24-00.
23-50 Pg 2	Added audio panel ops check from 24-00.
23-70 Pg 1	Added SN effectivity
24-00 Pg. 2, 5-12	Updated electrical block diagram. Removed procedures unrelated to ATA 24.
24-30 Pg 23, 27-30	Added Caution to assure terminals do not touch when torquing cables. Updated start/gen and stdby alt procedures.
25-10 Pg 13	Added AX graphic.
26-20 Pg 1	Added non-halon option.

27-10 Pg 1-5, 11, 14-22	Updated neutral procedure wording and graphic. Updated pulley locator graphic. Added aileron trim check from 24-00.
27-20 Pg 1-34	Updated trim tab/actuator procedures, added rudder trim check from 24-00, various formatting/graphic changes. Updated pedal procedures.
27-30 Pg 2-4, 8, 13, 14-17	Added elevator trim check from 24-00. Removed incorrect control assembly procedure. Updated trim actuator procedures. Updated graphics and formatting.
27-50 Pg 15-28	Updated flap control procedures. Added operational check from 24-00.
28-20 Pg 20-22, 25, 26, 27	Added fuel bypass check from 24-00, updated fuel flow cal to match SB. Added Dat Cal requirement for xducer.
28-40 Pg 1	Updated procedure.
29-10, Page 1-52	Updated procedures. Graphic and formatting updates.
29-20, Page 3	Refined wording for the emergency landing gear operational check.
30-30 Pg 15-26	Added stall heat checks for 24-00.
30-40 Pg 2	Added test procedure from 24-00.
30-60 Pg 1	Updated torque.
31-20 Pg 20-22	Added annunciator panel verification check from 24-00
32-10 Pg 1-18	Added trailing link lube and updated section to match current data.
32-20 Pg 1-3, 8-9	Updated NLG and centering device procedures.
32-30 All Pages	Updated MLG and NLG uplock adjustment and MLG upstop procedures. Reorganized section.
32-40 Pg 13-26	Added Wheels Speed sensor, reorganized section and updated graphics. Updated brake servo procedures, added brake servo ops check.
32-60 Pg 5-6	Updated WoW adjustment procedure.
33-10 Pg 2, 4	Added test procedures from 24-00.
33-20 Pg 2, 4-6	Added ops checks from 24-00.
33-40 All Pgs	Reformatted section (no content changes, just formatting).
34-00 Pg 7-14	Added Garmin and various system checks from 24-00.
34-10 Pg 5-32	Added VSI tolerance from 24-00. Pagination and formatting changes.
34-20 Pg 2-12	Added GTX config check from 24-00.
34-40 Pg5-24	Added GTS 825 config check from 24-00, removed antenna cables section.
39-10 All Pgs	Updated software loading procedures.

39-11 All Pgs	Added AX software loading section.
39-30 Pg 1-2	Updated relay box procedures.
51-20 Pg 10-24	Added interior paint and PPG Aerospace specs. Added radome protective tape.
52-10 Pg 2, 11, 20, 28	Updated lube spec, added door lock check from 24-00.
52-20 pg 1	Added emergency door caution.
53-80, Page 3-5	Updated figures to match current drawings.
55-20 Pg 5-6	Updated weight point specs and weight limits.
55-40 Pg 6	Updated weight point specs.
71-30 Pg 1, 9	Updated procedure.
71-60 Pg 4	Added inert sep test from 24-00.
71-60 Pg. 1-5	Added high temp RTV as alternative for PR-1995.
71-70 Pg. 1	Added note on using silicone tape for the inner lining of sceet tubing.
74-10 Pg 1-10	Updated procedures.
79-20 Pg 5-6	Added DAT cal, leak and ops check requirements.

This Page Intentionally Left Blank

CHAPTER 1

Introduction

This Page Intentionally Left Blank

List of Effective Pages

Chapter/Section	Page Number	Effective Date
1-Title	Page 1	02 Jan 2020
1-Title	Page 2	02 Jan 2020
1-LOEP	Page 1	08 Sep 2026
1-LOEP	Page 2	02 Jan 2020
1-TOC	Page 1	02 Jan 2020
1-TOC	Page 2	02 Jan 2020
1-00	Page 1	08 Sep 2026
1-00	Page 2	02 Jan 2020
1-00	Page 3	02 Jan 2020
1-00	Page 4	14 Jul 2021
1-00	Page 5	14 Jul 2021
1-00	Page 6	14 Jul 2021
1-00	Page 7	10 Jul 2025
1-00	Page 8	20 Oct 2023
1-00	Page 9	14 Jul 2021
1-00	Page 10	14 Jul 2021
1-00	Page 11	14 Jul 2021
1-00	Page 12	20 Oct 2023

This Page Intentionally Left Blank

Table of Contents

List of Effective Pages ..... 1-LOEP / Page 1
Table of Contents ..... 1-TOC / Page1

Paragraph **Page Number**

1. General ..... 1-00 / Page 1
2. Page Numbering ..... 1-00 / Page 1
3. Warning, Caution, and Note ..... 1-00 / Page 2
4. Maintenance Manual Chapters ..... 1-00 / Page 3
5. List of Publications ..... 1-00 / Page 4
6. Revision Service ..... 1-00 / Page 7
   A. Revisions ..... 1-00 / Page 7
   B. Change Bars ..... 1-00 / Page 7
7. Service Documents ..... 1-00 / Page 8
8. Effectivity ..... 1-00 / Page 8
9. Airplane Serial Number Applicability ..... 1-00 / Page 8
10. Description of the Airplane and Systems ..... 1-00 / Page 9
    A. Overview ..... 1-00 / Page 9
    B. Engine ..... 1-00 / Page 9
    C. Propeller ..... 1-00 / Page 9
    D. Landing Gear ..... 1-00 / Page 10
    E. Fuel System ..... 1-00 / Page 10
    F. Environmental Control System (ECS) ..... 1-00 / Page 11
    G. Oxygen System ..... 1-00 / Page 11
    H. Electrical System ..... 1-00 / Page 11
    I. Flight Controls ..... 1-00 / Page 12
    J. Standby Instrument ..... 1-00 / Page 12
    K. Fastener Torque ..... 1-00 / Page 12

This Page Intentionally Left Blank

INTRODUCTION

1. General

This manual is intended to assist mechanics and other authorized personnel in maintaining the Epic E1000 airplane. The manual gives detailed descriptions of systems, troubleshooting procedures, procedures for removal and installation of parts and components, and applicable maintenance procedures and techniques.

The manual is arranged, in part, according to guidelines established by the Air Transport Association of America (ATA) Specification 100 and supplemental standards mandated by the General Aviation Manufacturers Association (GAMA) Specification 2. The manual is divided into chapters. Chapters are divided, when necessary, into subsystems or sections that are sometimes divided into a specific subject.

This manual is electronically distributed and the electronic copy is maintained as the official controlled version. Printed copies of any part of this document are considered uncontrolled and may not reflect the latest revision. It is the responsibility of the user to verify that any printed copy is current prior to use. Failure to verify revision status may result in the use of outdated or incorrect maintenance information.

Any part numbers given in this maintenance manual are for reference only and should not be used for ordering replacement parts. Refer to the latest revision of the Illustrated Parts Catalog to order replacement parts and spares.

2. Page Numbering

Pages are numbered using two numbers separated by a dash followed by a forward slash and a sequential page number. The first number represents the chapter/system and the second indicates the section/subsystem. The section/subsystem number is always a two digit number.

Whenever the section/subsystem number is shown as two zeros (e.g. 27-00), the information on the page is general and applicable to the entire system.

The page numbering sequence starts at “1” at the beginning of each chapter/system.

The Table of Contents and the List of Effective Pages of each chapter/system are treated as if they are individual chapters.

3. Warning, Caution, and Note

The terms Warning, Caution, and Note are used to identify important issues.

WARNING: The information which follows is of critical importance and concerns an operating procedure, inspection, repair, or maintenance practice, which could cause or result in personal injury or death if not carefully followed.

CAUTION: The information which follows is of significant importance and concerns an operating procedure, inspection, repair, or maintenance practice, which could cause or result in damage to or destruction of equipment if not carefully followed.

Note: The information which follows is of particular importance regarding an operating procedure, inspection, repair, or maintenance practice.

4. Maintenance Manual Chapters

Chapter Title	Chapter No.
Introduction	1
Airworthiness Limitations	4
Time Limits and Maintenance Checks	5
Dimensions and Areas	6
Lifting and Shoring	7
Leveling and Weighing	8
Towing and Taxiing	9
Mooring, Storage, and Return to Service	10
Placards and Markings	11
Servicing	12
Standard Practices – Airframe	20
Environmental Systems	21
Auto Flight	22
Communications	23
Electrical Power	24
Equipment/Furnishings	25
Fire Protection	26
Flight Controls	27
Fuel	28
Hydraulic Power	29
Ice and Rain Protection	30
Indicating/Recording Systems	31
Landing Gear and Brakes	32
Lights	33
Navigation	34
Oxygen	35
Electrical Panels and Multipurpose Components	39
Standard Practices/Structures	51
Doors	52
Fuselage	53
Stabilizers	55
Windows	56
Wings	57
Propeller	61
Powerplant	71
Ignition	74
Engine Controls	76
Engine Indication	77
Exhaust	78
Oil	79

5. List of Publications

Engine

Publication Number	Publication Title	Manufacturer
3036132	Maintenance Manual Turboprop Gas Turbine Engine	Pratt & Whitney Canada Corp. 1000 Marie-Victorin Blvd. Longueuil, Quebec Canada J4G 1A1
3036134	Illustrated Parts Catalog Turboprop Gas Turbine Engine	Pratt & Whitney Canada Corp. 1000 Marie-Victorin Blvd. Longueuil, Quebec Canada J4G 1A1
	Continued Airworthiness of FA8103 Stacks	Frakes Aviation 2101 West Kilpatrick Cleburne, TX 76033 USA info@frakesaviation.com

Propeller

Publication Number	Publication Title	Manufacturer
Manual No. 127	Spinner Assembly Maintenance	Hartzell Propellers, Inc. One Propeller Place Piqua, Ohio 45356
Manual No. 147	Propeller Owner's Manual	Hartzell Propellers, Inc. One Propeller Place Piqua, Ohio 45356
Manual No. 149	Propeller Owner's Manual	Hartzell Propellers, Inc. One Propeller Place Piqua, Ohio 45356

Avionics

Publication Number	Publication Title	Manufacturer
190-02330-02	Garmin G1000 NXi Integrated Avionics System Line Maintenance Manual for the Epic E1000	Garmin International, Inc. 1200 E. 151st Street Olathe, KS 66062 USA
190-03244-00	Garmin G1000 NXi Integrated Avionics System Line Maintenance Manual for the Epic E1000 AX	Garmin International, Inc. 1200 E. 151st Street Olathe, KS 66062 USA
190-00719-00	Garmin G900X/G950X Installation and Maintenance Manual	Garmin International, Inc. 1200 E. 151st Street Olathe, KS 66062 USA
190-00734-11	GTX 33x and GTX 3x5 ADS-B Maintenance Manual	Garmin International, Inc. 1200 E. 151st Street Olathe, KS 66062 USA
190-00587-50	Garmin GTS Processor Installation Manual	Garmin International, Inc. 1200 E. 151st Street Olathe, KS 66062 USA
190-00587-20	GA 58 Antenna Installation Manual	Garmin International, Inc. 1200 E. 151st Street Olathe, KS 66062 USA
190-00848-00	GA 35, GA36, GA 37 Antenna Installation Instructions	Garmin International, Inc. 1200 E. 151st Street Olathe, KS 66062 USA
190-01639-00	Garmin GSU 75/GMU 75 Installation Manual	Garmin International, Inc. 1200 E. 151st Street Olathe, KS 66062 USA
190-01912-00	GIA 64 Installation Manual	Garmin International, Inc. 1200 E. 151st Street Olathe, KS 66062 USA
190-01134-11	GMA 350/ GMA 350H Installation Manual	Garmin International, Inc. 1200 E. 151st Street Olathe, KS 66062 USA
0040-15000-01	L3 Avionics Systems Genesis™ Electronic Standby Instrument System ESI-500 P/N 9200-15000-0101, MAG-500 P/N 9200-15500-0101 Pilot's Guide	L-3 Avionics Systems 5353 52nd Street, S.E. Grand Rapids, MI 49512-9704, USA

0040-15001-01	L3 Avionics Systems Genesis™ Electronic Standby Instrument System ESI-500 P/N 9200-15000-0101, MAG-500 P/N 9200-15500-0101 Installation Manual	L-3 Avionics Systems 5353 52nd Street, S.E. Grand Rapids, MI 49512-9704, USA
87201	S-TEC MAGIC® 2100 Pilot's Operating Handbook	One S–TEC Way Municipal Airport Mineral Wells, TX 76067–9236

Other

Publication Number	Publication Title	Manufacturer
10014485	Mask Deployment System (MDS)-Mask Packing Procedure	AVOX Systems 225 Erie Street Lancaster, NY 14086
2041-CMM019	Component Maintenance Manual with Illustrated Pats List, Model 2041 Passenger Seat Assemblies	Millennium Concepts, Inc 9050 W. Monroe Circle Wichita, KS 67209
2041-CMM022	Component Maintenance Manual with Illustrated Pats List, Model 2041 Crew Seat Assemblies	Millennium Concepts, Inc 9050 W. Monroe Circle Wichita, KS 67209
DOC09078E	Kannad Aviation AF Integra/AF-H Integra ELT Operation Manual	Orolia SA - Headquarters Bâtiment D, Bureau D204 (2ème étage) 2405 Route des Dolines 06560 Valbonne Sophia-Antipolis France
30-191	CM30-191 Component Maintenance Manual With IPL For Main Brake Assembly	Parker Hannifin Corporation 1160 Center Road Avon, OH 44011 USA
40-423	CM40-423Component Maintenance Manual with IPL for Nose Wheel Assembly	Parker Hannifin Corporation 1160 Center Road Avon, OH 44011 USA
40-434	CM40-434 Component Maintenance Manual with IPL for Main Wheel Assembly	Parker Hannifin Corporation 1160 Center Road Avon, OH 44011 USA
AWBCMM0001-12	Component Maintenance Manual for External Design Wheels & Brakes	Parker Hannifin Corporation 1160 Center Road Avon, OH 44011 USA

AWBTSG0001	Technician's Service Guide	Parker Hannifin Corporation 1160 Center Road Avon, OH 44011 USA
5-0171	RG Series Main Aircraft Battery Component Maintenance Manual	Concorde Battery Corporation 2009 San Bernadino Road West Covina, CA 91790
21-00-45	E1000 Air Management System System Description and Operation Manual with Illustrated Parts List	Enviro Systems, Inc. 12037 N. Highway 99 Seminole, OK 74868

6. Revision Service

Revision Service for this manual is available from Epic Aircraft Customer Support.

Epic Aircraft
22590 Nelson Rd.
Bend, OR 97701
Phone: (541) 318-8849

A. Revisions

Revisions to this manual will be issued periodically. Revised pages are assigned a revision letter or number to distinguish them from past or future revisions. Revisions are printed on white paper.

B. Change Bars

Changes to text and figures in the manual will be indicated by revision bars in the outer margin of the page adjacent to where the changes occur.

7. Service Documents

Service Documents include Service Bulletins, Service Letters, Service Instructions, and Service Advisories. When a Service Document is issued Epic Aircraft, LLC will notify the airplane owner concerning details for compliance. Service Documents are defined as follows:

(1) Service Bulletin (SB) – used for information that is pertinent to more than one aircraft and that is recommended or mandatory in nature, which will be identified on the SB.

(2) Service Letter (SL) – used for information that is pertinent to more than one aircraft and is non-mandatory or advisory in nature and involves some level of service or maintenance be performed on the aircraft.

(3) Service Instruction (SI) – used for information that is pertinent to a single airplane. It may be mandatory or recommended in nature, which will be identified on the SI.

(4) Service Advisory (SA) – used for information that is pertinent to one or more aircraft, is non-mandatory or advisory in nature, and does not require an aircraft maintenance interval. The primary use for a SA is the dissemination of product information.

8. Effectivity

At the beginning of each chapter of the maintenance manual is a list of effective pages (LOEP). The date of issue of each effective page is shown on the list.

9. Airplane Serial Number Applicability

Service Bulletins and Maintenance Manual Revisions issued for the airplane may not be applicable to all the airplanes Epic Aircraft, LLC has produced. When a particular change is issued, it will identify applicability by indicating the range of airplane serial numbers affected by the change. If no serial number is noted then the change is applicable to all E1000 airplanes.

The serial number for the airplane is issued at the time of manufacture and remains for the lifetime of that airplane. The airplane serial number, make, model, Type Certificate (TC) number, year of manufacture, and Production Certification (PC) number are on the Fuselage Identification Plate on the tail cone of the airplane. The serial number is also listed on the cover page of the FAA Approved Flight Manual.

10. Description of the Airplane and Systems

A. Overview

The Epic E1000 is a six-seat single-engine turbine-powered propeller airplane. The airplane is configured with a PT6A-67A engine in the front, and a Hartzell HC-E4A- 3D/E10477SK/D-5500-1P four-blade propeller or HC-E5A-3A/NC10245B*6 five bladed propeller. The airplane has a low-mount wing with a conventional tail. There are pneumatic deice boots on the wing, horizontal stabilizer, and engine inlet (FIKI certified aircraft only) and electric deice boots on the propeller. The maximum gross weight of the airplane is 8000 lbs. with maximum fuel capacity of 264 gallons stored in the wings.

The airplane is pressurized with a 34000 ft ceiling. All airplane structure is carbon composite, including the control surfaces (aileron, elevator, and rudder) and flaps. The airplane is has a Garmin avionics system with three flight displays configured as two primary flight displays (one in front of each crew seat) with a single multi-function display in the center of the instrument panel. It also has back-up altitude, airspeed, and attitude electrical instruments.

B. Engine

The airplane has a Pratt & Whitney PT6A-67A turbine engine that has two shafts and a 4-stage axial compressor driven by a single-stage centrifugal compressor turbine with an independent shaft coupling the power turbine to the propeller through an epicyclic concentric reduction gearbox. The engine generates 1200 SHP at 1700 RPM

C. Propeller

(SN: K003 - K010) The E1000 has a Hartzell Propeller, Inc. HC-E4A-3D/E10477SK/D-5500-1P counterweighted, four bladed, constant speed, variable pitch, full feathering, reversible propeller.

(SN: K011 and On, or K003 - K004 with SB-0017) The E1000 GX has a Hartzell Propeller, Inc. HC-E5A-3A/NC10245B*6 counterweighted, five bladed, constant speed, variable pitch, full feathering, reversible, carbon fiber composite propeller.

The pitch of the blades is changed using engine driven hydraulic pressure, the twisting moment of the rotating blades, and spring force in a configuration that provides the correct pitch for the engine load. A single acting engine driven governor controls the engine oil supplied to a piston in the center of the hub. The piston is linked to each blade and controls blade angle as hydraulic pressure operates the piston to overcome spring force and centrifugal counterweights mounted at the base of each blade. An increase in oil pressure from the governor decreases the blade pitch increasing propeller RPM. A decrease in oil pressure from the governor increases blade angle and decrease the propeller RPM. The feathering spring ensures the propeller blades will feather with the loss of engine oil pressure.

D. Landing Gear

This airplane has retractable main and nose gear in a tricycle configuration. Taxiing, takeoff, and landing forces are absorbed using hydro-pneumatic dampers on each main gear and a hydro-pneumatic strut on the nose gear. Each landing gear has tubeless tires on aluminum wheels. Braking is done using hydraulic disc brakes on each main gear. The brakes are operated by master cylinders attached to the left and right rudder pedals on both the pilot and the copilot sides. Aircraft K086 and on have an automated brake system that functions as an electronic parking brake and provides braking for the Emergency Autoland (EAL) system. Steering of the airplane is done by directional braking and by turning the nose gear.

The landing gear are actuated by a hydraulic system powered by an engine mounted hydraulic pump. An emergency nitrogen blowdown system can be used to extend the landing gear in an emergency.

E. Fuel System

The fuel system for the airplane has 5 main areas.

(1) Fuel Storage System
   (a) Wing Tanks that combined hold 264 gallons of usable fuel.

(2) Fuel Distribution System
   (a) Electric Boost Pump (in wing).
   (b) Auto Fuel Selector / Shut off valve.
   (c) Fuel Filter.
   (d) Fuel Hoses, Lines, and Fittings.

(3) Fuel System – Operation
   (a) The fuel selector valve allows for auto fuel selection. The auto fuel select enables the fuel selector valve to change between left and right tanks and vice versa, automatically through an electric servo. The servo will change the selector valve every 2 minutes and provides a means for managing fuel balance automatically.

(4) Fuel System – Indication
   (a) Indication of fuel quantity, fuel flow, fuel pressure and their associated warnings are all displayed on the Garmin flight displays.
   (b) A capacitance type fuel quantity probe senses the level of fuel in each tank system. One probe is mounted in each wing and runs parallel to the wing spar.
   (c) Fuel Flow is monitored with a Fuel Flow Transducer that is mounted between the Fuel Control Unit (FCU) and the fuel flow divider.
   (d) Fuel pressure is monitored with a pressure transducer that is tied into the fuel line between the fuel filter and the inlet to the oil-to-fuel heater. The transducer has a pressure range of 0-100 psig.

(5) Fuel System – Miscellaneous

(a) Fuel Purge Circuit.

(b) EPA Can / Blow-Back System.

F. Environmental Control System (ECS)

The majority of the pressurization, heating, and cooling system for the airplane is components from Enviro Systems. The inflow system and VCS cooling systems are manufactured by Enviro Systems, Inc. The cabin pressurization system is the KAPS II manufactured by Enviro Systems. The Bleed air to air heat exchangers are manufactured by Seamech.

G. Oxygen System

This airplane has a continuous supply oxygen system designed for two crew members and up to four passengers. Crew oxygen is “always on” to quick don masks with on-demand regulators. Quick connect outlets for the crew masks are located at the forward outboard sides of the cabin floor next to the seats. Passenger oxygen is supplied by continuous flow to masks that automatically deploy from ceiling mounted cartridges when needed.

The system has an oxygen cylinder with regulator, a pressure transducer, a service port, an over-pressure/over-fill relief valve, an altitude switch, two low pressure switches, distribution tubing, and oxygen masks.

The system provides 2 hours of oxygen to the crew and 10 minutes of oxygen for all four passengers.

H. Electrical System

Primary electrical power generation is done by a Skurka 300-amp starter generator and a Generator Control Unit (GCU). Secondary electrical power generation is done by a 41-amp standby alternator manufactured by B & C Specialties.

The main electrical design features are:

(1) Split bus architecture with provisions for joining the buses together through an energized contactor.

(2) Primary 28 VDC electrical generation from an engine driven 300 ampere starter generator.

(3) Secondary 28 VDC electrical generation from an engine driven 41 ampere alternator.

(4) Two sealed lead-acid 25 ampere-hour batteries. *(SN: K003 - K085)*

(5) Two lithium-ion 20 ampere-hour batteries. *(SN: K086 and On)*

(6) Diode isolated essential bus.

(7) External ground power socket.

I. Flight Controls

Flight Controls for the airplane are ailerons with trim tab, an elevator with trim tab, and a rudder with trim tab. All controls are cable actuated except the flaps which are rod actuated.

The airplane has a stall prevention system (AOA sensor, pusher, and shaker) and a rudder limiter.

J. Standby Instrument

The standby instrument system is either the L3 ESI-500 or the Garmin GI 275.

The Garmin GI 275 is installed in aircraft SN: K040 and on under STC SA02658SE. Refer to the latest revision of ICA 190-02246-11 for STC SA02658SE for maintenance information.

The L3 ESI-500 and remote-mounted MAG-500 magnetometer is installed in aircraft SN: K003-K039. The system provides a display of attitude, slip, altitude, airspeed, and heading. The ESI-500 can be barometrically corrected and the display brightness can be adjusted.

The ESI-500 has the following integral components:

(1) Active Matrix Liquid Crystal Display (AMLCD), menu push button, a rotating knob with push button, ambient light sensor, battery pack, solid-state rate sensors, accelerometers, and pressure transducers. A MicroSD card slot is located on the front bezel and is used for software and database updates. One 44-pin connector is located in the rear of the unit.

(2) The ESI-500 has interfaces for input and output of ARINC 429 data, discrete output, input/output of serial data, outside air temperature, dimming bus, RS-485 interfaces between the ESI-500 and MAG-500, and an I2C interface to the DCM-500.

(3) The battery pack automatically powers the ESI-500 without interruption upon loss of main input power. The battery pack has three lithium ion cells that are recharged using airplane power. The battery pack includes monitoring and safety functionality that provides continual operational checks and oversight of operation to ensure the battery cannot be overcharged, overly depleted, or detrimentally charged due to temperature limitations.

(4) Pitot and static pressures are measured through pitot and static ports located on the rear of the unit.

(5) The Data Configuration Module (DCM-500) is a solid-state device that retains software and hardware configuration information for the ESI-500. The DCM-500 is permanently attached to the airplane via the wiring harness.

K. Fastener Torque

All fastener torque is standard torque (refer to Chapter 20-60.2.) unless a specific torque value is indicated.

CHAPTER
4

Airworthiness Limitations

This Page Intentionally Left Blank

List of Effective Pages

Chapter/Section	Page Number	Effective Date
4-Title	Page 1	02 Jan 2020
4-Title	Page 2	02 Jan 2020
4-LOEP	Page 1	12 Nov 2025
4-LOEP	Page 2	02 Jan 2020
4-TOC	Page 1	02 Jan 2020
4-TOC	Page 2	02 Jan 2020
4-00	Page 1	13 Apr 2020
4-00	Page 2	12 Nov 2025
4-00	Page 3	02 Jan 2020
4-00	Page 4	02 Jan 2020

This Page Intentionally Left Blank

Table of Contents

List of Effective Pages ..... 4-LOEP / Page 1
Table of Contents ..... 4-TOC / Page1

Paragraph **Page Number**

Airworthiness Limitations

1. General ..... 4-00 / Page 1
   A. Maintenance Limitations ..... 4-00 / Page 1
   B. Replacement Limitations ..... 4-00 / Page 1
   C. Structural Limitations ..... 4-00 / Page 1
2. Description ..... 4-00 / Page 2
   A. Maintenance Limitations ..... 4-00 / Page 2
   B. Replacement Limitations ..... 4-00 / Page 2
   C. Structural Limitations ..... 4-00 / Page 2

This Page Intentionally Left Blank

AIRWORTHINESS LIMITATIONS

1. General

As required by 14 CFR 23.1529, by reference to 23.575 and G23.4, the Airworthiness Limitations section sets forth each mandatory replacement time, structural inspection interval, and related structural inspection procedure required for type certification. It outlines the maximum replacement intervals and/or maintenance requirements for specific aircraft components, systems, and structures.

The airworthiness limitations section is FAA approved and specifies maintenance required under 14 CFR 43.16 and 91.403 unless an alternative program has been FAA approved.

Airworthiness Limitations have been separated into three groups as follows:

A. Maintenance Limitations

These limitations apply to component and system inspections or checks that are required to be done during aircraft scheduled maintenance.

B. Replacement Limitations

These limitations apply to components that are life limited and require replacement at specific time intervals.

C. Structural Limitations

In accordance with 14 CFR 23.573, composite structures must be designed to meet damage tolerant criteria. No special structural limitations or inspections have been established at this time.

TIERNEY JANENE YOUNG
Digitally signed by TIERNEY JANENE YOUNG
Date: 2025.11.25 14:46:43 -08'00'

FAA Approved _____ Date: _____
for Manager, West Certification Branch
Compliance & Airworthiness Division
Aircraft Certification Service

2. Description

A. Maintenance Limitations

The scheduled maintenance requirements tabulated below are also included in Chapter 5 of this manual.

Inspection Item	Maintenance Limits
Engine Components	Refer to the Airworthiness Limitations in the current revision of Pratt & Whitney Engine Maintenance Manual, P/N: 3036132 for maintenance limitations on the Engine.

B. Replacement Limitations

The replacement requirements tabulated below are also included in Chapter 5 of this manual.

Inspection Item	Maintenance Limits	Chapter
Wing Pins	Replace all wing pins every 22,000 hours.	Chapter 57-10.2.B.
Horizontal Stabilizer Attachment Bolts	Replace all horizontal stabilizer attachment bolts every 22,000 hours.	Chapter 55-10.2.B.

C. Structural Limitations

The certification requirements of 14 CFR 23.573 {Amdt 23-48} require that the composite airframe structure, cabin, wing, empennage their carry through, and attaching structure whose failure would be catastrophic must be designed to damage tolerant criteria.

The airframe has a structural limitation of 22,000 flight hours. Operation beyond this limit may be expanded upon approval of an FAA-accepted inspection or life-extension program.

CHAPTER 5

Time Limits and Maintenance Checks

This Page Intentionally Left Blank

List of Effective Pages

Chapter/Section	Page Number	Effective Date
5-Title	Page 1	02 Jan 2020
5-Title	Page 2	02 Jan 2020
5-LOEP	Page 1	08 Sep 2026
5-LOEP	Page 2	08 Sep 2026
5-TOC	Page 1	10 Jul 2025
5-TOC	Page 2	02 Jan 2020
5-00	Page 1	10 Jul 2025
5-00	Page 2	08 Apr 2024
5-10	Page 1	12 Nov 2025
5-10	Page 2	16 May 2022
5-10	Page 3	14 Jul 2021
5-10	Page 4	12 Nov 2025
5-10	Page 5	08 Sep 2026
5-10	Page 6	08 Sep 2026
5-20	Page 1	08 Apr 2024
5-20	Page 2	02 Jan 2020
5-20	Page 3	10 Jul 2025
5-20	Page 4	10 Jul 2025
5-20	Page 5	10 Jul 2025
5-20	Page 6	10 Jul 2025
5-20	Page 7	10 Jul 2025
5-20	Page 8	10 Jul 2025
5-20	Page 9	10 Jul 2025
5-20	Page 10	10 Jul 2025
5-20	Page 11	10 Jul 2025
5-20	Page 12	10 Jul 2025
5-20	Page 13	10 Jul 2025
5-20	Page 14	10 Jul 2025
5-20	Page 15	10 Jul 2025
5-20	Page 16	10 Jul 2025
5-20	Page 17	10 Jul 2025
5-20	Page 18	08 Sep 2026
5-20	Page 19	10 Jul 2025
5-20	Page 20	10 Jul 2025
5-30	Page 1	08 Apr 2024
5-30	Page 2	08 Sep 2026
5-30	Page 3	08 Apr 2024

5-30 ..... Page 4 ..... 08 Apr 2024
5-30 ..... Page 5 ..... 08 Sep 2026
5-30 ..... Page 6 ..... 08 Sep 2026
5-30 ..... Page 7 ..... 10 Jul 2025
5-30 ..... Page 8 ..... 08 Sep 2026
5-30 ..... Page 9 ..... 08 Sep 2026
5-30 ..... Page 10 ..... 08 Sep 2026
5-30 ..... Page 11 ..... 08 Sep 2026
5-30 ..... Page 12 ..... 08 Sep 2026
5-30 ..... Page 13 ..... 08 Sep 2026
5-30 ..... Page 14 ..... 08 Sep 2026
5-30 ..... Page 15 ..... 08 Sep 2026
5-30 ..... Page 16 ..... 08 Sep 2026
5-30 ..... Page 17 ..... 08 Sep 2026
5-30 ..... Page 18 ..... 08 Sep 2026
5-30 ..... Page 19 ..... 08 Sep 2026
5-30 ..... Page 20 ..... 08 Sep 2026
5-30 ..... Page 21 ..... 08 Sep 2026
5-30 ..... Page 22 ..... 08 Sep 2026
5-30 ..... Page 23 ..... 08 Sep 2026
5-30 ..... Page 24 ..... 08 Sep 2026
5-30 ..... Page 25 ..... 08 Sep 2026
5-30 ..... Page 26 ..... 08 Sep 2026

5-50 ..... Page 1 ..... 02 Jan 2020
5-50 ..... Page 2 ..... 02 Jan 2020
5-50 ..... Page 3 ..... 02 Jan 2020
5-50 ..... Page 4 ..... 02 Jan 2020
5-50 ..... Page 5 ..... 12 Nov 2025
5-50 ..... Page 6 ..... 12 Nov 2025
5-50 ..... Page 7 ..... 14 Jul 2021
5-50 ..... Page 8 ..... 14 Jul 2021

Table of Contents

List of Effective Pages ..... 5-LOEP / Page 1
Table of Contents ..... 5-TOC / Page1

Paragraph **Page Number**

Time Limits and Maintenance Checks

1. General ..... 5-00 / Page 1
2. Inspection Programs ..... 5-00 / Page 1
3. Unscheduled Maintenance Inspections ..... 5-00 / Page 2
4. Out of Phase Inspections ..... 5-00 / Page 2
5. Special Conditions Cautionary Notice ..... 5-00 / Page 2

Time Limits and Special Inspection Items

1. Description ..... 5-10 / Page 1

Annual Inspection

1. Description ..... 5-20 / Page 1
2. Visual Inspection Definition ..... 5-20 / Page 1
3. Tap Testing ..... 5-20 / Page 2
4. Annual Inspection Checklist ..... 5-20 / Page 3

Progressive Inspection

1. Description ..... 5-30 / Page 1
2. Progressive Inspection Details: ..... 5-30 / Page 1
3. Inspection Definitions ..... 5-30 / Page 3
4. Progressive Inspection Checklists ..... 5-30 / Page 8

Unscheduled Maintenance Inspections

1. Description ..... 5-50 / Page 1
2. Maintenance Practices ..... 5-50 / Page 1

This Page Intentionally Left Blank

TIME LIMITS AND MAINTENANCE CHECKS

1. General

This chapter gives recommended schedules for maintenance, component overhaul and replacement, time limits, and airplane inspection. The checklists should be used at each scheduled inspection and contain the minimum items required to be inspected, checked, serviced, or replaced. Performance of the required maintenance procedures in this chapter will ensure the continued safe operation of this airplane.

2. Inspection Programs

A. Annual Inspections

All civil airplanes must undergo a complete inspection every 12 calendar months (refer to 14 CFR Part 91.409). This annual inspection must be done by authorized maintenance personnel (refer to 14 CFR 43.3).

B. 100 Hour Inspections

If the airplane is operated for hire, it must have an inspection every 100 flight hours.

The time between 100 hour inspections should never be exceeded by more than ten hours and then only exceeded if the extra time is required to reach a location where the inspection can be done. The additional flight hours used are then part of the 100 hours until the next inspection.

C. Progressive Inspection Program

The Epic Aircraft E1000 progressive inspection programs allow the annual inspection requirements to be divided into smaller operations over a specific time period. At the completion of one of the three progressive inspection programs offered, the aircraft will have undergone a full annual inspection in accordance with the requirements of 14 CFR Part 91.409(d). There are three (3) progressive inspection programs offered by Epic Aircraft. It is the responsibility of the owner/operator to ensure their aircraft is up to date on inspections when entering or exiting a progressive inspection program.

Note: This progressive inspection program is intended to assist owners/operators to be compliant with all CFRs relating to their aircraft. Epic Aircraft, LLC. is not responsible for ensuring compliance of said aircraft.

Note: Refer to the latest revision of the Pratt &Whitney Maintenance Manual for Turboprop Gas Turbine Engine, Manual No. 3036132 for engine inspection requirements.

3. Unscheduled Maintenance Inspections

Abnormal airplane operations such as hard or overweight landings, overspeed, foreign object damage, severe air turbulence, bird strike, lightning strike, and improper ground handling, etc. require specific inspections. Refer to Chapter 5-50.

4. Out of Phase Inspections

Out of phase inspections are all Time Limit and Specific Inspection items in Chapter 5-10 that are outside the scope of the Annual/100 Hour and Progressive Inspection programs.

5. Special Conditions Cautionary Notice

Airplanes operating in abnormal conditions, such as, high humidity, Arctic cold, or severe caustic or environmental locations may need more frequent inspection and service for wear, corrosion, and potential lack of lubrication. When these conditions are usual, periodic inspections should be done until an operator can set their own inspection periods based on experience or an approved condition monitoring system is established.

Note: The time periods stated in this manual are based upon average usage and average environmental conditions. The recommended periods do not ensure the item will reach the period without malfunction.

TIME LIMITS AND SPECIFIC INSPECTION ITEMS

1. Description

The following components are subject to a thorough inspection based on calendar time, operating cycles or hours. Some components may be subject to regulation stated in 14 CFR 23.1529 and 91.403(c) Instructions for Continued Airworthiness (ICA). Maintenance checks and component overhaul/replacement time periods and cycles are given below. For engine and propeller time limits and ICA information, refer to the current component service publication. Epic Aircraft, LLC defines one cycle as a single unit when the engine has been started and shut down (refer to AC 33.70-1).

Table 5-10.1: Time Limits and Specific Inspection Items

Specific Inspection Item		Time	Chapter
1.	Air Conditioning System Components	Refer to Section 7 of the current revision of Enviro Systems, Inc., System Description and Operation Manual with Illustrated Parts List for the Epic E1000, P/N SDOM Epic E1000 21-00-45	N/A
2.	Cabin Altitude Pressure Switch - Test for proper operation. Replace as necessary.	Every 10,000 hours	Chapter 21-30.2.I.
3.	Garmin GMA350c -- Verify Fail-Safe operation.	Every 5,000 hours	Chapter 23-50.2.A.
4.	Starter/Generator Brushes - Inspect brushes to determine rate of wear in accordance with the latest revision of the Skurka Aerospace Inc. Starter Generator Installation Manual, Document Number IM 001, Service Letter SL180, and Service Letter SL193.	Every 500 hours	Refer to the latest revision of the Skurka Aerospace Inc. Starter Generator Installation Manual, Document Number IM 001
5.	Overhaul the Starter/Generator - Time to overhaul depends on when brushes must be changed as determined by Item No. 4 above.	800 to 1,000 hours depending on when brushes must be changed.	Refer to the latest revision of the Skurka Aerospace Inc. Starter Generator Installation Manual, Document Number IM 001

6.	Alternator Field Voltage Circuit Breaker - Do the functional check of the ALT FIELD circuit breaker (CB119).	Every 10,000 hours	Refer to Chapter 24-30.2.F.
7.	Replace the Emergency Locater Transmitter (ELT) battery.	Before or on the battery expiration date, after more than 1 hour of real transmission (cumulated duration), after use in an emergency, or after an inadvertent activation of unknown duration.	Refer to the Kannad Aviation Component Maintenance Manual, CMM-25-63-08, P/N S18540501-25-05.
8.	Fire Extinguisher - Do inspection and maintenance every six years after the date of manufacture.	Every 6 years	Refer to Chapter 26-20.2.A.
9.	Fire Extinguisher Cylinder - Do hydrostatic testing 12 years after date stamped on the cylinder and every 12 years thereafter.	Every 12 years	Refer to Chapter 26-20.2.A.
10.	Fuel Collector Bay Check Valves - Inspect for condition and operation.	Every 5,000 hours	Chapter 28-10.2.E.
11.	Fuel Tank Vent Vacuum Breakers - Replace the fuel tank vent vacuum breakers every 5,000 hrs.	Every 5,000 hours	Chapter 28-10.2.D.
12.	Fuel Tank Vent Relief Valves - Replace the fuel tank vent relief valves every 5,000 hrs.	Every 5,000 hours	Chapter 28-10.2.D.
13.	Fuel Tank Vent Float Valves - Visually inspect the fuel tank vent float valves.	Every 5,000 hours	Chapter 28-10.2.D.
14.	Emergency Landing Gear Extension Bottle – Hydrostatic test 5 years after date stamped on the tank and every 5 years thereafter.	Every 5 years	Chapter 29-20.2.B.
15.	In-Line Filter – Replace the de-ice protection inflatable boots in-line filter.	Every 500 hours or annually, whichever comes first	Refer to Chapter 30-10.2.D.
16.	Garmin GDL 69A – Perform an electrical bonding check.	Every 10 years or 2,000 hours, whichever occurs first.	Refer to Chapter 23-30.2.A.

17.	Garmin GSU 75 – The static system and altimeter must be verified in accordance with 14 CFR 91.411 and Appendix E of 14 CFR Part 43. Refer to the latest revision of the Garmin G1000 NXi Integrated Avionics System Line Maintenance Manual for the Epic E1000, P/N 190-02330-01 for the test procedure.	Not later than every 2 years.	N/A
18.	Garmin GTX 33x/GTX 3x5 – The ATC transponder must be verified in accordance with 14 CFR 91.413 and Appendix F of 14 CFR Part 43. Refer to the latest revision of the Garmin G1000 NXi Integrated Avionics System Line Maintenance Manual for the Epic E1000, P/N 190-02330-01 for the test procedure.	Not later than every 2 years.	N/A
19.	L3 Aviation Systems Genesis™ ESI-500 – Calibrate the battery once every year. Check the accuracy of the Real Time Clock (RTC) once every 2 years. Correct any RTC error at an appropriately rated repair station. Refer to the latest revision of the L3 Aviation Systems Genesis™ ESI-500 and MAG-500 Installation Manual, P/N 0040-15001-01.	Battery Calibration – Every year Real Time Clock Accuracy Check – every 2 years	Chapter 34-20.2.F.
20.	L3 Aviation Systems Genesis™ ESI-500 – The static system and altimeter must be verified in accordance with 14 CFR 91.411 and Appendix E of 14 CFR Part 43. Refer to the latest revision of the L3 Aviation Systems Genesis™ ESI-500 and MAG-500 Installation Manual, P/N 0040-15001-01 for the test procedure.	Not later than every 2 years.	N/A
21.	Passenger Oxygen Mask -- Overhaul or replace every 6 years from date of manufacture.	Every 6 years	Refer to Chapter 35-0.2.H.

22.	Crew Oxygen Face Mask with Regulator -- Repair and/or overhaul every 5 years.	Every 5 years	Refer to Chapter 35-0.2.I.
23.	Oxygen Cylinder – Hydrostatic test 5 years after date stamped on the cylinder and every 5 years thereafter.	Every 5 years	Refer to Chapter 35-0.2.G.
24.	Oxygen Cylinder - Replace after 15 years of service after date stamped on the cylinder.	Every 15 years	Refer to Chapter 35-0.2.F.
25.	Horizontal Stabilizer Attachment Bolts - Four bolts attach the horizontal stabilizer to the fuselage. Inspection – Visually inspect the bolts for signs of motion or corrosion, every 2,000 hrs. Do not loosen or remove the bolts unless replacement is required. Replacement – Replace the bolts every 22,000 hours.	Inspection – Every 2,000 hours Replacement – Every 22,000 hours	Chapter 55-10.2.A. Chapter 55-10.2.B.
26.	Wing Pins – Four pins attach the wings to the fuselage. Inspection – Visually inspect the pins for signs of motion or corrosion every 2,000 hrs. Do not loosen or remove the pins unless replacement is required. Replacement – Replace the pins every 22,000 hours.	Inspection – Every 2,000 hours Replacement – Every 22,000 hours	Chapter 57-10.2.C. Chapter 57-10.2.B.
27.	Wing Bonding– Perform a visual inspection of the fuel bay for each side of the wing. Perform a tap test on both upper and lower skins.	Every 11,000 hrs	Refer to Chapter 51-20.2.H.

28.	Overhaul the Propeller – Overhaul the propeller by an authorized propeller overhaul facility.	Every 4,000 hours or 72 calendar months	Refer to the latest revision of Hartzell Propeller Service Letter HC-SL-61-61.
29.	Overhaul the Propeller Overspeed Governor – Overhaul by an authorized overhaul facility.	If operating continuously, overhaul at engine TBO, otherwise every 6 years. See Woodward SB 33580-M for exceptions.	Refer to the latest revision of Woodward Service Bulletin 33580-M.
30.	Overhaul the Engine – Overhaul the engine by an authorized engine repair facility.	Every 3,500 hours	Refer to the latest revision of Pratt & Whitney Canada Service Bulletin, S.B. No. 14603.
31.	Engine Hot Section Inspection (HSI)	1750 to 2,000 hours	Refer to the latest revision of Pratt & Whitney Canada Service Bulletin, S.B. No. 14603.
32.	Engine Mount – Replace the engine mount.	Every 22,000 hours	Chapter 71-20.2.B. Chapter 71-20.2.C.
33.	Engine Vibration Isolators – Replace at engine overhaul. Complete including all associated attachment hardware.	At engine overhaul	Chapter 71-20.2.A.
34.	Hydraulic Pump - Remove and apply spline lubricant (molybdenum sulfide grease conforming to MIL-G-21164) to the pump drive spline.	Every 500 Hours	Refer to Chapter 29-10.2.A. (Piston-Type) Refer to Chapter 29-10.2.B. (Gear-Type)

35.	Cabin Interior - Side Panels		
	Remove the left and right side panels, windshield center post and glareshield.	Every 48 months or 2,000 Hours	Refer to Chapter 25-10.2.G. Refer to Chapter 25-10.2.H. Refer to Chapter 25-10.2.I. Refer to Chapter 25-20.2.G.
	Perform a visual inspection of the side panels for condition. Clean as necessary.		Chapter 5-20.2.
	Perform a visual inspection of the interior structure for condition, attachment, corrosion, debonding, delamination, and cracks. If damage is found, do a tap test (refer to Chapter 51-10) and contact Epic Aircraft, LLC for disposition.		Chapter 5-20.2.
	Perform a visual inspection of all exposed wiring, plumbing, and environmental system ducting for condition, security, chafing, and attachment.		Chapter 5-20.2.
	Perform a visual inspection of the windshield center post, windshield retention flanges, and all associated hardware for condition, security, delamination, or damage.		Chapter 56-10.2.A.
	Perform a visual inspection of the side windows for cracking, crazing, scratches, and adhesive delamination. Clean as necessary. Check the window support brackets for condition and security.Every 48 Months or 2,000 Hours		Refer to Chapter 56-20.2.A.
36.	Comply with RVSM Special Inspection Items	Every 24 months	Refer to Chapter 34-10.2.J.
37.	Garmin Emergency Autoland (EAL) Operational Check	Every 1000 Hours	Chapter 22-00.3.
38.	Trailing Link Lubrication	Every 100 Hours	Chapter 32-10.C.

ANNUAL INSPECTION

1. Description

14 CFR Part 91.409 gives regulatory information for annual and 100 hour inspections. An annual inspection must be done every 12 months and must be approved for return to service of the aircraft by an authorized technician (refer to requirements stated in 14 CFR 43.7). A 100 hour Inspection is required for an airplane being used for compensation or hire.

Upon completion of all checklist items, the aircraft will have met the requirements of 14 CFR 91.409 and may be returned to service by an authorized technician.

In addition the altimeter instrument and static system and all ATC transponders MUST be tested and inspected at 24-month intervals (refer to 14 CFR §91.411 and 91.413, and Part 43 Appendix E and Appendix F).

The owner and/or operator is responsible for maintaining the airplane in an airworthy condition, including compliance with all applicable Airworthiness Directives. It is further the responsibility of the owner or operator to ensure the airplane is inspected as specified in Parts 43 and 91 of the Federal Aviation Regulations. This inspection checklist is a guide to assist in meeting the foregoing requirements and is not intended to be all-inclusive. The owner or operator should select only qualified personnel to maintain the airplane.

2. Visual Inspection Definition

When doing a visual inspection use any inspection aids necessary.

Visual Inspection should look for, but not be limited to, the following conditions.

(1) Composite Parts

Cleanliness, security, condition, wear, cracking, deformation, disbonding, delamination, overheating, fluid saturation, blockage of vent or drainage holes, and any other apparent damage

(2) Metal Parts

Cleanliness, corrosion, condition, security, fatigue cracks, welding cracks, and any other apparent damage,

(3) Bolts and Nuts

Damage, wear, fretting, elongation, proper torque, safety wire, and cotter pins.

(4) Moving Parts

Cleanliness, condition, security, proper operation, lubrication, clearance, tension, travel, binding, excessive wear, deformation, cracking, corrosion, or any other apparent damage.

(5) Fuel, Air, Oxygen, Nitrogen, and Hydraulic Oil Lines, Tubing, and Hoses

Cleanliness, security, improper bend radius, deterioration, chafing, obstruction, and any other apparent damage.

(6) Filters and Screens

Remove filters and screens, as applicable, then cleaned and inspected for condition and contamination. Replace as necessary.

(7) Wet Wing Fuel Tanks

Evidence of fuel leaks, corrosion, delamination, disbonding, and any other apparent damage.

(8) Electrical Wiring

Cleanliness, attachment, deformation, heat deterioration, hardening, brittleness, and fluid contamination, broken, loose, or corroded terminals, chafed, worn, or broken insulation, and any other apparent damage.

Inspect wiring for correct routing and clearances as follows:

(a) Make sure wiring is supported at least every 24” using a primary support (metal cushion or plastic clamp, not plastic cable straps).

(b) Make sure chafe protection is installed at any point where contact with a surface is possible.

(c) Make sure edging or grommets are installed at any point wiring passes through structure.

(d) Make sure a minimum of 0.5” of separation exists between wiring and moving engine linkage components through their full range of motion.

(e) Make sure a minimum of 0.5” of separation exists between wiring and all moving flight control system components through their full range of motion.

(f) Make sure a drip loop is present at any point that wiring angles downward to a connector, terminal block, panel or junction box.

(g) Make sure the minimum bend radius of any harness, cable, or wire is not smaller than ten times the outer diameter of the largest included wire or cable.

(h) Make sure flammable fluid lines are not used to support wiring.

(i) Whenever possible, wiring should be routed above flammable fluid lines, and maintain the maximum practicable separation when deflected towards the flammable fluid line.

3. Tap Testing

Refer to Chapter 51-20.

4. Annual Inspection Checklist

Operational Checks		Annual		Inspector
		100 Hour		
1.	STALL PREVENTION SYSTEM Perform a Visual Inspection of the lift transducers for condition. Verify proper operation. Refer to Chapter 31-20.2.F.			
2.	LH AND RH PITOT HEAT AND CURRENT SENSORS Do the operational check. Refer to Chapter 34-10.2.I.			
3.	ICE MODE CHECK Perform the Lift Computer Ice Mode Check. Refer to Chapter 31-20.2.B. (K056 and On and K003 – K055 with SB-0035 only)			
4.	ICE DETECTOR Perform a Visual Inspection for conditions and security. Do the Ice Detector Operational check. Refer to Chapter 30-10.2.J. Do the Ice Detector Calibration Check. Refer to Chapter 30-10.2.J. (K056 and On and K003 – K055 with SB-0035 only)			
5.	PRESSURIZATION SYSTEM Do the emergency pressurization airflow test. Refer to Chapter 21-30.2.J. Do the ground fresh air fan test. Refer to Chapter 21-30.2.K.			
6.	ESI-500 ELECTRONIC STANDBY INSTRUMENT SYSTEM (SN:K003 - K039) Perform the battery calibration procedure. Refer to the latest revision of L3 Avionics Systems document no. 0040-15000-01.			
7.	GARMIN GI-275 ELECTRONIC FLIGHT DISPLAY (SN:K040 and On) Comply with Instructions for Continued Airworthiness for STC SA02658SE. Refer to the latest revision of Garmin document 190-02246-11.			
8.	DE-ICE BOOTS Perform a Visual Inspection of all boots and edge sealant for condition, leaks and attachment. Verify correct operation, (inlet lip de-ice boot K056 and On and K003 – K055 with SB-0035 only). Refer to Chapter 30-10.2.A.			
9.	RUDDER LIMITER Perform the rudder limiter operational check. Refer to Chapter 27-20.2.G.			

Operational Checks		Annual		Inspector
		100 Hour		
10.	EXTERIOR LIGHTS Perform a Visual Inspection and verify proper operation of: - Ice Light (Refer to Chapter 33-40.2.E.) - Taxi Light (Refer to Chapter 33-40.2.D.) - Landing Lights (Refer to Chapter 33-40.2.A.) - Wing Position/Strobe Lights (Refer to Chapter 33-40.2.B.) - Tail Position/Strobe Lights (Refer to Chapter 33-40.2.C.)			
11.	INTERIOR LIGHTING Perform a Visual Inspection and verify proper operation of: - Cockpit Overhead and Glareshield Lights - Reading, Cargo, And Courtesy Lights - Overhead Lighting - Step Lighting			
12.	FUEL AUTO SELECTOR Cycle auto selector left/right and verify that it springs back to neutral if depressed. Perform Operational Check, refer to Chapter 28-20.B.1.C			
13.	SECURITY EVENT LOG REVIEW Perform the Security Event Log Review. (K014, K086 and On only.) Chapter 23-70.4.			

Powerplant and Propeller		Annual		Inspector
		100 Hour		
14.	ENGINE Perform engine MINOR inspection items. Refer to the latest revision of the Pratt &Whitney Maintenance Manual for Turboprop Gas Turbine Engine, Manual No. 3036132, 72-00-00, Table 601.			
15.	ENGINE Perform engine inspections in accordance with the manufacturer's approved Instructions for Continued Airworthiness. Refer to the latest revision of the Pratt &Whitney Maintenance Manual for Turboprop Gas Turbine Engine, Manual No. 3036132, 72-00-00, Table 601.			
16.	PROPELLER: COMPONENTS Perform a Visual Inspection of the spinner, mechanical feedback ring, stop rods, springs, and reversing linkage for condition, damage, and security. Perform a Visual Inspection of the beta system carbon block for wear and condition. Make sure there is no metal contact between the beta ring and beta arm. Refer to the current revision of Hartzell Manual 149 for 4 bladed propellers *(SN: K003 - K010)* and Hartzell Manual 147 for 5 bladed propellers *(SN: K011 and On, or K003 - K004 with SB-0017)* for carbon block wear limits. BLADES AND HUB Clean and do visual inspection of the blades and hub. Lubricate as required. Refer to the current revision of Hartzell Manual 149 for 4 bladed propellers *(SN: K003 - K010)* and Hartzell Manual 147 for 5 bladed propellers *(SN: K011 and On, or K003 - K004 with SB-0017)*. DE-ICE BOOTS Visual inspection for condition and security. Refer to the current revision of Hartzell Manual No. 180, Table 5-1. PROPELLER HEAT Perform the propeller de-ice operational check. 4 Blade Propeller - Refer to Chapter 30-60.2.E. 5 Blade Propeller - Refer to Chapter 30-60.2.F. BRUSH BLOCK ASSEMBLY Visual inspection for security, angle, and brush wear. Refer to the current revision of Hartzell Manual No. 180, Table 5-3.			

Powerplant and Propeller		Annual		Inspector
		100 Hour		
17.	COWLING Clean and inspect. Visual inspection for cracks, delamination, chafing, heat damage, condition of fastening system, condition of paint, and condition of interior epoxy fire protective coating. If cracks, delamination, chafing, or heat damage is found, contact Epic Aircraft, LLC.			
18.	INLET AIR DUCT Visual inspection for condition and security. Visual inspection of the de-ice boot, plumbing, and associated components for condition, and attachment.Verify correct operation in conjunction with the wing/stabilizer de-ice boot check (K056 and On and K003 – K055 with SB-0035 only).			
19.	INERTIAL SEPARATORS Visual inspection of the vanes, actuator, wiring, switch, and components for condition, and security. Do the operational check. Refer to Chapter 71-60.2.A.			
20.	COMPRESSOR INLET Visual inspection of the compressor inlet area. Check struts, blades, and vanes for damage, corrosion, dirt, cracks, erosion, and foreign object damage.			
21.	EXHAUST Visual inspection for cracks, corrosion, attachment, and distortion. Refer to Chapter 78-10.2.A. and Frakes Aviation Document Continued Airworthiness of FA8103 Exhaust Stacks.			
22.	ENGINE IGNITION SYSTEM Do the operational check of the engine ignition system. Refer to Chapter 74-10.2.D.			
23.	ENGINE GENERAL INSPECTION Perform a Visual Inspection of the following for leakage, condition, damage, and attachment: - Engine mount and ground straps. - Engine vibration isolators. - Engine accessories. - Oil cooler and plumbing. - Engine drains and plumbing. - Electrical harness and wiring. - Fuel purge system. - Firewall, firewall blanket, and firewall blanket penetration panels. Refer to Chapter 71-30.2.F.			

Powerplant and Propeller		Annual		Inspector
		100 Hour		
24.	ENGINE CONTROLS (Power, Condition, Propeller, and MOR Levers) Perform a Visual Inspection of the controls and cables for condition and attachment. Verify operation full travel with no binding and correct cushion. Check for correct operation of the friction lock (K003 - K085 excluding K014). Make sure there is a minimum 0.375" gap between any moving components (e.g. rod ends, rotating levers) and any possible obstructions. **WARNING: DO NOT MOVE THE POWER LEVER AFT INTO BETA WHEN THE ENGINE IS NOT RUNNING.** Refer to the current revision of Pratt & Whitney Engine Maintenance Manual, P/N: 3036132.			
25.	STARTER GENERATOR Perform a Visual Inspection of the starter generator, cool air duct, wiring, and mounting clamp for condition and security. Check the that the terminal connector stud nuts are tight and fully seated.			
26.	STANDBY ALTERNATOR Perform a Visual Inspection for condition and attachment.			
27.	IN-LINE PNEUMATIC (P3) FILTER Remove and inspect for condition and contaminants. Clean or replace as required. Refer to Chapter 28-20.2.H.			
28.	MAGNETIC CHIP DETECTOR Do the operational check of the magnetic chip detector. Refer to Chapter 77-40.2.E.			
29.	AIRFRAME FUEL FILTER (GASCOLATOR): SCREEN Remove and do a visual inspection for contaminants and microbial growth. Clean or replace as required. Refer to Chapter 28-20.2.C. BYPASS CHECK VALVE Do a visual inspection for condition and cleanliness. Check for correct operation. Refer to Chapter 28-20.2.C. DIFFERENTIAL PRESSURE INDICATOR Check for correct operation. Refer to Chapter 28-20.2.C.			
30.	DE-ICE SYSTEM IN-LINE FILTER Replace the de-ice system in-line filter. Refer to Chapter 30-10.2.D.			

Powerplant and Propeller		Annual		Inspector
		100 Hour		
31.	WINDSHIELD DE-ICE MANIFOLD Visual inspection for condition and corrosion. Drain any moisture using the drain cock and install new MS20995C32 safety wire. Verify correct operation. Refer to Chapter 30-40.2.A.			
32.	MASTER CONTROL UNIT (MCU) Perform a Visual Inspection for condition and security. Do the MCU Essential Bus Isolation Diode Check. Refer to Chapter 24-30.2.C.			
33.	AIRCRAFT BATTERIES (K003-K085 excluding K014): Clean, do a visual inspection, and charge. Do a capacity test. Refer to the latest revision of the Concorde Battery Corporation RG Series Main Aircraft Battery Component Maintenance Manual, P/N 5-0171. (K014, K086 and On): Perform Battery Diagnostics Check. Refer to Chapter 24-30.2.B.			

Airframe - Exterior		Annual		Inspector
		100 Hour		
34.	FUSELAGE/EMPENNAGE EXTERIOR SKIN AND STRUCTURE Clean as necessary then perform a Visual Inspection of the exterior fuselage structure including the skin and skin bond seams located at BL 0 (top and bottom). Perform a Visual Inspection for impact damage, surface abrasion, and delamination. If damage is found, do a tap test and contact Epic Aircraft, LLC. Refer to Chapter 51-10.2.A.			
35.	WING GENERAL INSPECTION - Perform a Visual Inspection of the wing skin, panels, fairing and structure for damage, cracks, delamination, and debonding. Do a tap test and contact Epic Aircraft for disposition. Refer to Chapter 51-10.2.A. - Perform a Visual Inspection of fuel tank access panels and fuel drains for leaks. Check fuel caps for proper operation. - Perform a Visual Inspection of wiring for attachment and damage. make sure wiring in the wing tip does not interfere with the aileron bellcranks.			
36.	WINGS CENTER ACCESS AREA Perform a Visual Inspection of the wing spars, attach fittings, and wing ground straps for condition and security. Perform a Visual Inspection of the flight control cables, pulleys, bulkhead seals, flap motor, torque tube, wiring, switches, and associated components for condition, security, and attachment. Visual inspection of the hydraulic system for condition, leaks, and hose connections. Perform a Visual Inspection of the flap actuator assembly. Make sure the flap actuator jack screw is lubricated with Lubriplate 130 AA.			
37.	VERTICAL STABILIZER Perform a Visual Inspection of the vertical stabilizer skin, spar, trailing edges for cracks, debonding, condition, attachment. Perform a Visual Inspection of the ground straps for condition and security. Refer to Chapter 32-40.2.I. If damage is found, do a tap test and contact Epic Aircraft, LLC. Refer to Chapter 51-10.2.A.			
38.	HORIZONTAL STABILIZER Perform a Visual Inspection of the horizontal stabilizer skin, spar, trailing edges for cracks, debonding, condition, attachment. Perform a Visual Inspection of the ground straps for condition and security. Refer to Chapter 55-10.2.E. If damage is found, do a tap test and contact Epic Aircraft, LLC. Refer to Chapter 51-10.2.A.			

Airframe - Exterior		Annual		Inspector
		100 Hour		
39.	EXTERIOR PLACARDS Inspect for presence and condition. Refer to Chapter 11-20.2.C.			
40.	STATIC WICKS AND BASES Perform a Visual Inspection for security and condition. Do a static wick base electrical continuity test. Refer to Chapter 23-60.2.B. Test the wick for electrical resistance. Refer to Chapter 23-60.2.A.			
41.	AIRFLOW MODIFICATION DEVICES Perform a Visual Inspection for condition and security. Flight is prohibited if any are missing or damaged. - Leading Edge Stall Strips (Refer to Chapter 57-40.2.A.) - Leading Edge Turbulators (Refer to Chapter 57-40.2.C.) - Vortex Generators (Refer to Chapter 57-40.2.D.) - Aileron Turbulators (Refer to Chapter 57-40.2.B.)			
42.	ANTENNAS Perform a Visual Inspection for condition and security. Verify leading edge protective tape is present and in good condition.			
43.	FUSELAGE DRAIN HOLES Perform a Visual Inspection for condition and obstructions. Refer to Chapter 53-10.2.J.			
44.	WINDSHIELD PANELS AND ADHESIVE - EXTERIOR Perform a Visual Inspection for cracking, crazing, and adhesive delamination. Clean as necessary. Check the windshield frame for condition and security. Refer to Chapter 56-10.2.A. CENTERPOST - EXTERIOR Perform a Visual Inspection of the post and upper and lower area attachment and all associated hardware for condition, security, delamination, or damage. Refer to Chapter 56-10.2.A.			
45.	WINDOWS AND ADHESIVE - EXTERIOR Perform a Visual Inspection for cracking, crazing, scratches, and adhesive delamination. Refer to Chapter 56-20.2.A. If any of these conditions or damage are found contact Epic Aircraft, LLC. Clean as necessary. Check the window frames for condition and security.			
46.	STATIC PORTS Perform a Visual Inspection for condition and obstructions.			

Airframe - Exterior		Annual		Inspector
		100 Hour		
47.	PITOT TUBES AND PITOT LINES (Inspect lines through wing access panels and in wing root.) (Do in conjunction with Item 60) Perform a Visual Inspection and drain moisture. Refer to Chapter 34-10.2.E.			
48.	OXYGEN SYSTEM Ensure the over pressure/over-fill relief valve Overboard Discharge Indicator (ODI) is intact, undamaged, and green. Replace the ODI if it is missing, damaged, or the green color is faded or damaged.			

	Airframe - Interior	Annual		Inspector
		100 Hour		
49.	AIRFRAME INTERIOR GENERAL INSPECTION **Note: Removal of cockpit and cabin floor panels and the overhead finish panel is required for this inspection, refer to 53-20, 25-10, and 25-20. Refer to 5-10.1 item 35 for side panel removal requirements.** COCKPIT- - Perform a Visual Inspection of the instrument panel, sub panels, displays, wiring, and plumbing for condition and attachment. - Perform a Visual Inspection of wiring, environmental system ducting, pitot static lines, de-ice lines, fuel lines and hydraulic lines in the underfloor and behind the kick panels for leaks condition, damage, and attachment. - Perform a Visual Inspection of interior structure for condition, attachment, debonding, delamination, and cracks. If damage is found, do a tap test and contact Epic Aircraft, LLC. Refer to Chapter 51-10.2.A. - Perform a Visual Inspection of interior trim panels for condition and security. CABIN - - Perform a Visual Inspection of wiring, environmental system ducting, pitot static lines, de-ice lines, and hydraulic lines for leaks condition, damage, and attachment. - Perform a Visual Inspection of terminal blocks TS101 and TS102 for condition and security of the ring terminals. Refer to Chapter 53-80.2.B. - Perform a Visual Inspection of interior structure for condition, attachment, debonding, delamination, and cracks. If damage is found, do a tap test and contact Epic Aircraft, LLC. Refer to Chapter 51-10.2.A. - Perform a Visual Inspection of interior trim panels for condition and security.			

Airframe - Interior		Annual		Inspector
		100 Hour		
50.	EMPENNAGE INTERIOR **Note: Removal of the pressure bulkhead access panel is required for this inspection (refer to Chapter 21-30).** Perform a Visual Inspection of structure for cracks and condition. Perform a Visual Inspection of shelves, components, de-ice plumbing, tubing, and wiring for condition and attachment.			
51.	AFT PRESSURE BULKHEAD Perform a Visual Inspection for condition, debonding, security, and cracks. Inspect thoroughly around the outflow valves and adjacent fuselage structure. Inspect the outflow valves, pressurization controller, and associated wiring and plumbing for condition, attachment, and damage. Refer to Chapter 21-30.2.A.			
52.	PASSENGER/CREW DOOR Perform a Visual Inspection of the skin, structure, seal, passive door seal including the foam near the hinge, and attachment hinge for condition, security, and attachment. Inspect all moving parts, cables, and latch mechanism for security, condition, and correct rigging. Clean and lubricate the pins using Loctite™ LB8042 lithium grease, or Lubriplate No. 630-2 grease. Refer to Chapter 52-10.2.D.			
53.	EMERGENCY EXIT DOOR Perform a Visual Inspection of skin, structure, and seals for condition, security, and attachment. Confirm latch pins are fully seated into the blocks and no red is showing. **Note: Door will have to be removed per 52-20 to gain access to both seals for inspection.** Inspect all moving parts, cables, and latch mechanism for security, condition, and correct rigging. Refer to Chapter 52-20.2.A.			
54.	SEATS Perform a Visual Inspection of seats, belts, and shoulder harnesses for condition and attachment. Check for proper operation. Ensure TSO tags are present and legible on the restraints. Refer to the current revision of Millennium Concepts, Inc. Component Maintenance Manual with Illustrated Parts List, Document Numbers 2014-CMM019 and 2014-CMM022.			

Airframe - Interior		Annual		Inspector
		100 Hour		
55.	SEAT RAILS Perform a Visual Inspection for scratches and condition. Surface scratches in the black anodizing are allowable but if damage past the anodizing into the aluminum are found, contact Epic Aircraft, LLC. Clean with isopropyl alcohol and lubricate with paraffin wax.			
56.	OXYGEN Perform a Visual Inspection of the crew masks, stowage cup, hose, and hose fitting for condition and cleanliness. Refer to Chapter 35-0.2.I. Perform a Visual Inspection of the passenger masks, storage bottle, plumbing, and associated components for condition and cleanliness. Refer to Chapter 35-0.2.H.			
57.	INTERIOR PLACARDS Inspect for presence and condition. Refer to Chapter 11-30.2.E.			
58.	FIRE EXTINGUISHER Check gauge, condition and date. Inspect in accordance with NFPA 10.			
59.	AIR CONDITIONER Verify proper operation. Perform a Visual Inspection of evaporator modules, compressor condenser module, plumbing, and wiring for condition and attachment as required by Section 7 of the latest revision of the Enviro Systems, Inc., Air Management System, System Description and Operation Manual with Illustrated Parts List for the E1000, document # 21-00-45.)			
60.	EMERGENCY LOCATOR TRANSMITTER (ELT) Perform a Visual Inspection for condition and security. Test in accordance with the latest revision of Orolia Service Letter SL S18XX501-25-01. Record the battery replacement due date.			
61.	PITOT AND STATIC LINES (Do in conjunction with Item 48) Perform a Visual Inspection and drain moisture. Refer to Chapter 34-10.2.E.			

Flight Controls		Annual		Inspector
		100 Hour		
62.	AILERONS Prior to wingtip removal, inspect the ailerons for operation, chafing, and binding. Perform a Visual Inspection of the structure, hinges, hardware, bearings, attachment, and ground straps for condition and corrosion. Make sure the right aileron moisture drain hole is unobstructed (the left aileron moisture drains through the trim tab wire conduit hole). Refer to Chapter 27-00.2.F. Check for correct operation, deflections, correct direction of travel, and movement is free without binding. Make sure aileron travel limits are being met with the stops at the aileron bellcranks and not limited by yoke travel. Refer to Chapter 27-10.2.K.			
63.	AILERON TAB Perform a Visual Inspection of the trim servo attachment brackets, rod assemblies, rod ends, wiring, and hinge for condition and security. Inspect bearings for looseness. Check for correct operation, deflection and indication. Refer to Chapter 27-10.2.K.			
64.	ELEVATORS Perform a Visual Inspection of the structure, hinges, hardware, bearings, torque tube, tube horns, grounding straps, and attachment for condition, and corrosion. Verify correct operation, deflections, and freedom of movement. Make sure elevator travel limits are being met with the stops at the elevator bellcrank and not limited by yoke travel. Refer to Chapter 27-30.2.K. Check the moisture drain holes are unobstructed. Refer to Chapter 27-00.2.F.			
65.	ELEVATOR TRIM TAB Perform a Visual Inspection of the trim servo attachment brackets, rod assemblies, rod ends, wiring, and hinge for condition and security. Inspect bearings for looseness. Check for correct operation, deflection and indication. Refer to Chapter 27-30.2.K. Check the moisture drain hole is unobstructed. Refer to Chapter 27-00.2.F.			
66.	RUDDER Perform a visual inspection of the structure, hinges, hardware, bearings, and ground straps for condition and attachment. Make sure the moisture drain hole is unobstructed. Refer to Chapter 27-00.2.F. Check for correct operation and deflections. Make sure rudder travel limits are being met with the stops at the lower rudder bellcrank and not limited by pedal travel. Refer to Chapter 27-20.2.N.			

Flight Controls		Annual		Inspector
		100 Hour		
67.	RUDDER TRIM TAB Perform a Visual Inspection of the trim motor attachment brackets, rod assemblies, rod ends, wiring, and hinge for condition and security. Inspect bearings for looseness. Make sure the moisture drain hole is unobstructed. Refer to Chapter 27-00.2.F. Check for correct operation, deflection and indication. Refer to Chapter 27-20.2.N.			
68.	FLAPS - Perform a Visual Inspection for condition. Check hinges, hinge fairings, horns, rod ends, bearings, push rods, torque tube assembly, deflections, and attachment. Refer to Chapter 27-50.2.I. Make sure the moisture drain holes are unobstructed. Refer to Chapter 27-00.2.F. Flight is prohibited if any of the flaps hinge fairings are missing or damaged. - Perform the secondary limit switch check. Refer to Chapter 27-50.2.J.			
69.	YOKE Perform a Visual Inspection for condition, attachment, and full travel without binding. Check switches for condition and operation.			
70.	FLIGHT CONTROL CABLES Perform a Visual Inspection of the aileron, elevator, and rudder cables, cable rod ends, pulleys, brackets, and associated components for condition, corrosion, broken strands, tension, security, and correct safetying. Refer to Chapter 27-0.2.B.			
71.	RUDDER PEDALS Perform a Visual Inspection of the pedals, torque tubes, pushrods, and associated hardware for condition, attachment, and security. Refer to Chapter 27-20.2.E.			
72.	RUDDER LIMITER Perform a Visual Inspection of the rudder limiter for condition and attachment. Perform the rudder limiter lubrication. Refer to Chapter 27-20.2.G.			
73.	AUTOPILOT - Perform a Visual Inspection of the servos for condition and attachment. - Check bridle cable tensions *(SN: K003-K010)* Refer to Chapter 22-10.2.L., *(SN: K011 and on and K003-K004 with SB-0017)* Refer to Chapter 22-11.2.G. - Do the Autopilot Operational Checkout *(SN: K003-K010)* Refer to Chapter 22-10.2.I., *(SN: K011 and on and K003-K004 with SB-0017 only)* Refer to Chapter 22-11.2.H.			

Landing Gear		Annual		Inspector
		100 Hour		
74.	MAIN LANDING GEAR INSPECTION Perform a Visual Inspection of the following for condition, damage, leakage, and security: - Attachment Brackets - Landing Gear Legs (Bracket, Fork, and Axle) - Uplock Hook and Bump Stop - Wiring Harness/Switches - Landing Gear Doors - Dampers - Actuators - Uplock Actuators - Hydraulic and Brake Lines Perform the following services: - Do lubrication items. Refer to Chapter 12-20.2.E. - Service the dampers if needed. Refer to Chapter 12-10.2.E.			
75.	BRAKES Check the brake system for proper operation and brake wear. Perform a Visual Inspection of brake assemblies and brake lines for leaks, security of installation, corrosion, and damage, refer to Chapter 32-40. Check the fluid level in the brake reservoir. Inspect the brake assembly in accordance with the current revision of Aircraft Wheel And Brake By Parker Hannifin (Kaman) Maintenance Manual with Illustrated Parts List, P/N 30-191. (SN: K014, K086 and on): Inspect the wheel speed sensors, for security, installation, corrosion, and damage. Do an Operational Check of the Brake Hold system. Refer to Chapter 32-40.2.I.			
76.	MAIN WHEELS AND TIRES Perform a Visual Inspection of the wheels for condition, damage, and corrosion. Check tires for wear, damage, and inflation. Inspect, clean, and lubricate bearings and races. Refer to Chapter 32-40 and the latest revision of the Aircraft Wheel And Brake By Parker Hannifin (Kaman) CM40-434 Component Maintenance Manual with IPL for Main Wheel Assembly P/N 40-434 for detailed maintenance procedures and the Goodyear Aircraft Tire Care & Maintenance document, or Michelin Aircraft Tire and Service Manual MAT-CSM 32-45-01.			

Landing Gear		Annual		Inspector
		100 Hour		
77.	NOSE LANDING GEAR INSPECTION Perform a Visual Inspection of the following for condition, damage, leakage, and security: - Landing Gear Leg (Housing, Strut, and Fork) - Uplock Hook and Bump Stop - Nose Wheel Centering Device - Wiring Harness/Switches - Landing Gear Doors - Actuator - Steering Damper - Uplock Actuator - Hydraulic Lines Perform the following services: - Do lubrication items. Refer to Chapter 12-20.2.E. - Do the Nose Wheel Centering Device Service. Refer to Chapter 32-20.2.C. - Service the strut if needed. Refer to Chapter 12-10.2.F.			
78.	STEERING SYSTEM Perform a Visual Inspection of the steering system components for condition, corrosion, damage, attachment, and operation. Refer to Chapter 32-50.2.H.			
79.	NOSE WHEEL AND TIRE Perform a Visual Inspection of the wheel for condition, damage, and corrosion. Check tire for wear, damage, and inflation. Inspect, clean, and lubricate bearings and races. Refer to Chapter 32-40 and the latest revision of the Aircraft Wheel And Brake By Parker Hannifin (Kaman) CM40-423 Component Maintenance Manual with IPL for Nose Wheel Assembly P/N 40-423 for disassembly, assembly, and maintenance procedures and the Goodyear Aircraft Tire Care & Maintenance document.			
80.	HYDRAULIC RESERVOIR Perform a Visual Inspection of the plumbing, and wiring for condition, attachment and security, and evidence of leakage. Service reservoir as required. Replace the hydraulic fluid filter. Refer to Chapter 29-10.2.C.			
81.	HYDRAULIC ACCUMULATOR Perform a Visual Inspection of the condition and security of the accumulator, hoses, and fittings. Verify the accumulator is pressurized to 1200 ± 50 psig at 70°F. Service with nitrogen (A-A-59503) as required. Refer to Chapter 12-10.2.D.			

Landing Gear		Annual		Inspector
		100 Hour		
82.	HYDRAULIC SUPPRESSOR Perform a Visual Inspection of the condition and security of the suppressor, hoses, and fittings. Verify the suppressor is pressurized to 150 ± 50 psig at 70°F Service with nitrogen (A-A-59503) as required. Refer to Chapter 12-10.2.D.			
83.	LANDING GEAR BLOWDOWN BOTTLE Perform a Visual Inspection of the plumbing, fittings, tank, handles, and nitrogen burst disc for condition, security, and leaks. Check nitrogen service. Service as required. Refer to Chapter 12-10.2.G.			
84.	LANDING GEAR OPERATIONAL CHECKS - Do the Emergency Extension Check. Refer to Chapter 29-20.2.A. - Do the Landing Gear Operational Check. Refer to Chapter 32-30.2.F. *Do the following when performing the landing Gear Operational Check:* - Check landing gear door fit in the retracted position. Refer to Chapter 32-10.2.D. Refer to Chapter 32-20.2.E. - Check for correct operation of the nose wheel centering device. Refer to Chapter 32-20.2.C. - Do the uplock hook check. Refer to Chapter 32-30.2.G. - Do the operational check of the weight on wheels switches. Refer to Chapter 32-60.2.B.			

Aircraft Records		Annual		Inspector
		100 Hour		
85.	AIRCRAFT LOGBOOKS Record total times, times since overhaul and times since last required or recommended maintenance checks.			
86.	AMM CHAPTER 4 AND CHAPTER 5 Review AMM 4-00 Airworthiness Limitation and 5-10 Time Limits and Specific Inspection Items for additional inspection and replacement requirements.			
87.	INSTRUCTIONS FOR CONTINUED AIRWORTHINESS (ICA) Check for updates and comply with all ICA.			
88.	AIRWORTHINESS DIRECTIVES (AD'S) AND SERVICE BULLETINS Check for new and recurring AD's which may need to be complied with during this inspection. Also, check for applicable manufacturer's Service Documents.			
89.	AIRCRAFT RECORDS Check for the presence and condition of aircraft federal registration form and airworthiness certificate.			
90.	APPROVED FLIGHT MANUAL/PILOT'S OPERATING HANDBOOK (AFM/POH). Verify all revisions have been installed and the Equipment List and Weight and Balance forms are current and correct.			

Signature of Mechanic or Inspector _____

Certificate Number _____

Date_____

PROGRESSIVE INSPECTION

1. Description

These inspections meet the intent of 14 CFR §23.1529, 14 CFR §91.409, 14 CFR §135.419, and part 43, Appendix D.

In addition, the altimeter system and altitude reporting equipment and ATC transponders must be tested and inspected at 24-month intervals in accordance with 14 CFR §91.411 and §91.413, and part 43 Appendix E and Appendix F.

The owner and/or operator is responsible for maintaining the airplane in an airworthy condition, including compliance with all applicable Airworthiness Directives. It is further the responsibility of the owner or operator to ensure the airplane is inspected as specified in parts 43, 91 and 135 of the Federal Aviation Regulations. This inspection guide is to assist in meeting the foregoing requirements and is not intended to be all-inclusive or replace the good judgment of a certified airframe and powerplant mechanic.

It is the responsibility of the owner/operator to ensure the appropriately rated personnel performing the inspections have access to the latest revision of this inspection guide, all Epic Aircraft maintenance and service documents, and all vendor publications required to perform the inspections.

2. Progressive Inspection Details:

For each aircraft maintained under this program, the scope of a full annual inspection will be completed within 400, 800, or 1200 hours (dependent upon program selected) and within a 12 month period.

A. Inspection Programs:

(1) **400 Hour Program:** This cycle will have four (4) phase inspections spaced every 100 hours and a mini inspection included in each phase. This is to be completed within 12 calendar months or 400 hours, whichever comes first. The program excludes those tasks that have component operating hour intervals.

(2) **800 Hour Program:** This cycle will have mini inspections to be held every 100 hours as well as four (4) phase inspections to be completed within 12 calendar months or 800 hours, whichever comes first. This schedule excludes those tasks that have component operating hour intervals.

(3) **1200 Hour Program:** This cycle will have mini inspections to be held every 100 hours as well as four (4) phase inspections to be completed within 12 calendar months or 1200 hours, whichever comes first. This schedule excludes those tasks that have component operating hour intervals.

B. Progressive Inspection Program Intervals -

Progressive inspection program intervals may only be exceeded by 10 hours and only for the purpose of reaching a facility where the inspection can be completed. The completion of the progressive inspection constitutes an annual inspection. If all inspection phases for each 12 month period are not completed within 12 calendar months, all remaining inspection phases must be completed to maintain airworthiness as required by 14 CFR §91.409.

C. Progressive Inspection Program Eligibility -

Epic E1000, E1000 GX, and E1000 AX aircraft are eligible for the progressive inspection program provided they meet the following criteria:

(1) The aircraft has had all required service documents and Airworthiness Directives addressed, and completed an annual inspection, or

(2) The aircraft has had all required service documents and Airworthiness Directives addressed, and the aircraft has less than 100 hours flight time since production manufacture date or last annual inspection, or

(3) The aircraft has had all required service documents and Airworthiness Directives addressed, and the aircraft is less than 12 months from production manufacture date or last annual inspection.

D. Beginning the Progressive Inspection Program -

To begin the progressive inspection program, the owner/operator must submit a letter of request and a copy of the progressive inspection program for approval to the Flight Standards District Office having jurisdiction over the area in which the applicant is located. A certified mechanic holding an inspection authorization or an appropriately certified repair station will be required to supervise or conduct the progressive inspection. Approval must be obtained before initiating this program.

E. Conducting the Progressive Inspection Program -

Prior to beginning an inspection phase, review the airplane inspection records and maintenance history to determine all inspections that are due. Determine and comply with any FAA airworthiness directives. Make sure to comply in the time frame required by the instructions contained within the directive. Inspect airplane records to determine hourly and calendar replacement times for components.

Perform all maintenance and inspection tasks required in the progressive inspection program checklist. Make the required entries in the aircraft maintenance records for the work performed.

F. Ending the Progressive Inspection Program -

The owner or operator must notify the local Flight Standards District Office (or if outside the United States, the appropriate governing body having jurisdiction over the area in which the applicant is located) in writing before ending the progressive inspection program. Within 10 flight hours of exiting the progressive inspection program the owner or operator must comply with the remaining inspection items of the program or have a complete annual inspection performed on the aircraft. It is the responsibility of the owner/operator to ensure their aircraft is up to date on inspections when entering/exiting a progressive inspection program.

3. Inspection Definitions

A. Inspection Criteria

(1) Composite Parts

Cleanliness, security, condition, wear, cracking, deformation, disbonding, delamination, overheating, fluid saturation, blockage of vent or drainage holes, and any other apparent damage.

(2) Metal Parts

Cleanliness, corrosion, condition, security, fatigue cracks, welding cracks, and any other apparent damage.

(3) Bolts and Nuts

Damage, wear, fretting, elongation, proper torque, safety wire, and cotter pins.

(4) Moving Parts

Cleanliness, condition, security, lubrication, clearance, tension, travel, binding, excessive wear, deformation, cracking, corrosion, or any other apparent damage.

(5) Fuel, Air, Oxygen, Nitrogen, and Hydraulic Oil Lines, Tubing, and Hoses

Cleanliness, security, improper bend radius, deterioration, chafing, and any other apparent damage.

(6) Filters and Screens

Remove filters and screens, as applicable, then cleaned and inspected for condition and contamination. Replace as necessary.

(7) **Wet Wing Fuel Tanks**

Evidence of fuel leaks, corrosion, delamination, disbonding, and any other apparent damage.

(8) Electrical Wiring

Cleanliness, attachment, deformation, heat deterioration, hardening, brittleness, and fluid contamination, broken, loose, or corroded terminals, chafed, worn, or broken insulation, and any other apparent damage. Inspect wiring for correct routing and clearances as follows:

(a) Ensure wiring is supported at least every 24” using a primary support (metal cushion or plastic clamp, not plastic cable straps).

(b) Ensure chafe protection is installed at any point where contact with a surface is possible.

(c) Ensure edging or grommets are installed at any point wiring passes through structure.

(d) Ensure a minimum of 0.5” of separation exists between wiring and moving engine linkage components through their full range of motion.

(e) Ensure a minimum of 0.5” of separation exists between wiring and all moving flight control system components through their full range of motion.

(f) Ensure a drip loop is present at any point that wiring angles downward to a connector, terminal block, panel or junction box.

(g) Ensure the minimum bend radius of any harness, cable, or wire is not smaller than ten times the outer diameter of the largest included wire or cable.

(h) Ensure flammable fluid lines are not used to support wiring.

(i) Whenever possible, wiring should be routed above flammable fluid lines, and maintain the maximum practicable separation when deflected towards the flammable fluid line.

B. Inspection Program Outlines

400 Hour Program		
Task	**Hours**	**Inspector**
Phase A & Mini Inspection	100	
Phase B & Mini Inspection	200	
Phase C & Mini Inspection	300	
Phase D & Mini Inspection	400	

800 Hour Program		
Task	**Hours**	**Inspector**
Mini Inspection	100	
Phase A & Mini Inspection	200	
Mini Inspection	300	
Phase B & Mini Inspection	400	
Mini Inspection	500	
Phase C & Mini Inspection	600	
Mini Inspection	700	
Phase D & Mini Inspection	800	

1200 Hour Program		
Task	**Hours**	**Inspector**
Mini Inspection	100	
Mini Inspection	200	
Phase A & Mini Inspection	300	
Mini Inspection	400	
Mini Inspection	500	
Phase B & Mini Inspection	600	
Mini Inspection	700	
Mini Inspection	800	
Phase C & Mini Inspection	900	
Mini Inspection	1,000	
Mini Inspection	1,100	
Phase D & Mini Inspection	1,200	

C. Inspection Tasks

(1) Visual Inspection

A visual examination of an area or component to detect obvious damage or failures. A mirror, flashlight, and/or drop-light may be needed.

(2) Operational Check

A task to determine that a part, assembly, or system is performing as intended.

(3) Tap Testing

Refer to Chapter 51-20.

D. Inspection Program Tolerances

CAUTION: Tolerances do not apply to life limited items.

Each phase may be signed off between 10 hours prior to or 10 hours after the due time without affecting the due time of the next inspection. Any inspection completed prior to the 10 hour tolerance will reset the due time of the next inspection.

4. Progressive Inspection Checklists

Mini Inspection

Mini Inspection		
Task	Description	Inspector
1.	AIRCRAFT LOGBOOKS: Review airframe, engine, and propeller logbooks for required and recommended maintenance checks. Record total times since overhaul and times since last required or recommended maintenance checks.	
2.	AMM CHAPTER 4 AND CHAPTER 5: Review AMM 4-00 Airworthiness Limitation and 5-10 Time Limits and Specific Inspection Items for additional inspection and replacement requirements.	
3.	INSTRUCTIONS FOR CONTINUED AIRWORTHINESS (ICA): Check for updates and comply with all ICA requirements, including any applicable STC's.	
4.	AIRWORTHINESS DIRECTIVES (AD'S) AND SERVICE BULLETINS: Check for new and recurring AD's which may need to be complied with during this inspection. Check for applicable manufacturer's service documents.	
5.	AIRCRAFT RECORDS: Check for the presence and condition of aircraft federal registration form and airworthiness certificate.	
6.	APPROVED FLIGHT MANUAL/PILOT'S OPERATING HANDBOOK: (AFM/POH). Verify all revisions have been installed and the Equipment List and Weight and Balance forms are current and correct.	
7.	ENGINE Perform engine inspections in accordance with the latest revision of the Pratt &Whitney Maintenance Manual for Turboprop Gas Turbine Engine, Manual No. 3036132, 72-00-00, Table 601.	
8.	PROPELLER Perform propeller inspections in accordance with the current revision of Hartzell Manual 149 for 4 bladed propellers (SN: K003 - K010) and Hartzell Manual 147 for 5 bladed propellers (SN: K011 and On, or K003 - K004 with SB-0017) and Hartzell Manual 180 for Propeller Deice.	
9.	PASSIVE DOOR SEAL Inspect passive door seal for proper adhesion, debris, cuts, or nicks. Chapter 52-10.2.	

Mini Inspection		
Task	Description	Inspector
10.	WING, ENGINE INLET, AND HORIZONTAL DEICE BOOTS Inspect for damage. Chapter 30-10.2.	
11.	INTERIOR LIGHTING Perform a Visual Inspection and verify proper operation of: - Cockpit Overhead and Glareshield Lights - Reading, Cargo, And Courtesy Lights - Overhead Led Lighting - Step Led Lighting	
12.	STATIC WICKS AND BASES: Inspect for broken or damaged static wicks, cracks around bonded bases.	
13.	EXTERIOR LIGHTS Perform a Visual Inspection and verify proper operation of: - Ice Light (Refer to Chapter 33-40.2.E.) - Taxi Light (Refer to Chapter 33-40.2.D.) - Landing Lights (Refer to Chapter 33-40.2.A.) - Wing Position/Strobe Lights (Refer to Chapter 33-40.2.B.) - Tail Position/Strobe Lights (Refer to Chapter 33-40.2.C.)	
14.	TIRES Visually inspect the main and nose tires for damage and wear. Service as needed. Chapter 12-10.2.	
15.	LANDING GEAR Visually inspect NLG strut for signs of leakage. Perform a visual inspection of the MLG dampers and associated hardware for leaks, correct inflation, condition, and attachment. Clean and service as necessary. Do the 100 Hour Trailing Link Lubrication. Chapter 32-10.2. Chapter 32-20.2.	
16.	BRAKES Visually inspect for signs of leakage and check wear. Refer to Chapter 32-40 and the current revision of Parker Hannafin Component Maintenance Manual with Illustrated Parts List, P/N 30-191.	

Mini Inspection		
Task	Description	Inspector
17.	PROPELLER Visually inspect the propeller blades and de-ice boots for damage. Visually inspect the beta arm and carbon block for wear and condition. Make sure there is no contact between the beta ring and beta arm. Refer to the current revision of Hartzell Manual 149 for 4 bladed propellers *(SN: K003 or K010)* and Hartzell Manual 147 for 5 bladed propellers *(SN: K011 and On, or K003 - K004 with SB-0017).*	
18.	ENGINE Remove the top cowl. Visually inspect the starter/generator, standby alternator, hydraulic pump for signs of leakage or damage. Install the top cowl. Refer to Chapter 71-10.2.A.	

Signature of Mechanic or Inspector _____

Certificate Number _____

Date_____

Phase A: Exterior Inspection

Phase A: Exterior Inspections		
Task	Description	Inspector
1.	FUSELAGE/EMPENNAGE EXTERIOR SKIN AND STRUCTURE Clean as necessary then perform a Visual Inspection of the exterior fuselage structure including the skin and skin bond seams located at BL 0 (top and bottom). Perform a Visual Inspection for impact damage, surface abrasion, and delamination. If damage is found, do a tap test and contact Epic Aircraft, LLC. Refer to Chapter 51-10.2.A.	
2.	VERTICAL STABILIZER Perform a Visual Inspection of the vertical stabilizer skin, spar, trailing edges for cracks, debonding, condition, attachment. Perform a Visual Inspection of the ground straps for condition and security. Refer to Chapter 53-10.2.K. If damage is found, do a tap test and contact Epic Aircraft, LLC. Refer to Chapter 51-10.2.A.	
3.	HORIZONTAL STABILIZER Perform a Visual Inspection of the horizontal stabilizer skin, spar, trailing edges for cracks, debonding, condition, attachment. Perform a Visual Inspection of the ground straps for condition and security. Refer to Chapter 55-10.2.E. If damage is found, do a tap test and contact Epic Aircraft, LLC. Refer to Chapter 51-10.2.A.	
4.	ANTENNAS Perform a Visual Inspection for condition and security. Verify leading edge protective tape is present and in good condition.	
5.	FUSELAGE DRAIN HOLES Perform a Visual Inspection for condition and obstructions. Refer to Chapter 53-10.2.J.	
6.	WINDSHIELD PANELS AND ADHESIVE - EXTERIOR Perform a Visual Inspection for cracking, crazing, and adhesive delamination. Clean as necessary. Check the windshield frame for condition and security. Refer to Chapter 56-10.2.A. CENTERPOST - EXTERIOR Perform a Visual Inspection of the post and upper and lower area attachment and all associated hardware for condition, security, delamination, or damage. Refer to Chapter 56-10.2.A..	

Phase A: Exterior Inspections		
Task	Description	Inspector
7.	WINDOWS AND ADHESIVE - EXTERIOR Perform a Visual Inspection for cracking, crazing, scratches, and adhesive delamination. Refer to Chapter 56-20.2.A. If any of these conditions or damage are found contact Epic Aircraft, LLC. Clean as necessary. Check the window frames for condition and security.	
8.	AIRFLOW MODIFICATION DEVICES Perform a Visual Inspection for condition and security. Flight is prohibited if any are missing or damaged. - Leading Edge Stall Strips (Refer to Chapter 57-40.2.A.) - Leading Edge Turbulators (Refer to Chapter 57-40.2.C.) - Vortex Generators (Refer to Chapter 57-40.2.D.) - Aileron Turbulators (Refer to Chapter 57-40.2.B.)	
9.	OXYGEN SYSTEM Ensure the over pressure/over-fill relief valve Overboard Discharge Indicator (ODI) is intact, undamaged, and green. Replace the ODI if it is missing, damaged, or the green color is faded or damaged.	
10.	EXTERIOR PLACARDS Inspect for presence and condition. Refer to Chapter 11-20.2.C.	
11.	INTERIOR PLACARDS Inspect for presence and condition. Refer to Chapter 11-30.2.E.	
12.	ESI-500 ELECTRONIC STANDBY INSTRUMENT SYSTEM (SN:K003 - K039) Perform the battery calibration procedure. Refer to the latest revision of L3 Avionics Systems document no. 0040-15000-01.	
13.	GARMIN GI-275 ELECTRONIC FLIGHT DISPLAY (SN:K040 and On) Comply with Instructions for Continued Airworthiness for STC SA02658SE. Refer to the latest revision of Garmin document 190-02246-11.	
14.	SECURITY EVENT LOG REVIEW Perform the Security Event Log Review. (K014, K086 and On only.) Chapter 23-70.4.	

Signature of Mechanic or Inspector _____

Certificate Number _____

Date_____

Phase B: Engine/Firewall Forward Inspection

Phase B: Engine/Firewall Forward Inspections		
Task	Description	Inspector
1.	ENGINE Perform engine MINOR inspection items. Refer to the latest revision of the Pratt &Whitney Maintenance Manual for Turboprop Gas Turbine Engine, Manual No. 3036132, 72-00-00, Table 601.	
2.	PROPELLER: COMPONENTS Perform a Visual Inspection of the spinner, mechanical feedback ring, stop rods, springs, and reversing linkage for condition, damage, and security. Perform a Visual Inspection of the beta system carbon block for wear and condition. Make sure there is no metal contact between the beta ring and beta arm. Refer to the current revision of Hartzell Manual 149 for 4 bladed propellers *(SN: K003 - K010)* and Hartzell Manual 147 for 5 bladed propellers *(SN: K011 and On, or K003 - K004 with SB-0017)* for carbon block wear limits. BLADES AND HUB Clean and do visual inspection of the blades and hub. Lubricate as required. Refer to the current revision of Hartzell Manual 149 for 4 bladed propellers *(SN: K003 - K010)* and Hartzell Manual 147 for 5 bladed propellers *(SN: K011 and On, or K003 - K004 with SB-0017)*. DE-ICE BOOTS Visual inspection for condition and security. Refer to the current revision of Hartzell Manual No. 180, Table 5-1. PROPELLER HEAT Perform the propeller de-ice operational check. 4 Blade Propeller - Refer to Chapter 30-60.2.E. 5 Blade Propeller - Refer to Chapter 30-60.2.F. BRUSH BLOCK ASSEMBLY Visual inspection for security, angle, and brush wear. Refer to the current revision of Hartzell Manual No. 180, Table 5-3.	
3.	COWLING Clean and inspect. Visual inspection for cracks, delamination, chafing, heat damage, condition of fastening system, condition of paint, and condition of interior epoxy fire protective coating. If cracks, delamination, chafing, or heat damage is found, contact Epic Aircraft, LLC.	

Phase B: Engine/Firewall Forward Inspections		
Task	Description	Inspector
4.	INLET AIR DUCT Visual inspection for condition and security. Visual inspection of the de-ice boot, plumbing, and associated components for condition, and attachment.Verify correct operation in conjunction with the wing/stabilizer de-ice boot check (K056 and On and K003 – K055 with SB-0035 only).	
5.	INERTIAL SEPARATORS Visual inspection of the vanes, actuator, wiring, switch, and components for condition, and security. Do the operational check. Refer to Chapter 71-60.2.A.	
6.	COMPRESSOR INLET Visual inspection of the compressor inlet area. Check struts, blades, and vanes for damage, corrosion, dirt, cracks, erosion, and foreign object damage.	
7.	EXHAUST Visual inspection for cracks, corrosion, attachment, and distortion. Refer to Chapter 78-10.2.A. and Frakes Aviation Document Continued Airworthiness of FA8103 Exhaust Stacks.	
8.	ENGINE IGNITION SYSTEM Do the operational check of the engine ignition system. Refer to Chapter 74-10.2.D.	
9.	ENGINE GENERAL INSPECTION Perform a Visual Inspection of the following for leakage, condition, damage, and attachment: - Engine mount and ground straps. - Engine vibration isolators. - Engine accessories. - Oil cooler and plumbing. - Engine drains and plumbing. - Electrical harness and wiring. - Fuel purge system. - Firewall, firewall blanket, and firewall blanket penetration panels. Refer to Chapter 71-30.2.F.	

Phase B: Engine/Firewall Forward Inspections		
Task	Description	Inspector
10.	ENGINE CONTROLS (Power, Condition, Propeller, and MOR Levers) Perform a Visual Inspection of the controls and cables for condition and attachment. Verify operation full travel with no binding and correct cushion. Check for correct operation of the friction lock (K003 - K085 excluding K014). Make sure there is a minimum 0.375” gap between any moving components (e.g. rod ends, rotating levers) and any possible obstructions. **WARNING: DO NOT MOVE THE POWER LEVER AFT INTO BETA WHEN THE ENGINE IS NOT RUNNING.** Refer to the current revision of Pratt & Whitney Engine Maintenance Manual, P/N: 3036132.	
11.	STARTER GENERATOR Perform a Visual Inspection of the starter generator, cool air duct, wiring, and mounting clamp for condition and security. Check the that the terminal connector stud nuts are tight and fully seated.	
12.	STANDBY ALTERNATOR Perform a Visual Inspection for condition and attachment.	
13.	IN-LINE PNEUMATIC (P3) FILTER Remove and inspect for condition and contaminants. Clean or replace as required. Refer to Chapter 28-20.2.H.	
14.	MAGNETIC CHIP DETECTOR Do the operational check of the magnetic chip detector. Refer to Chapter 77-40.2.E.	
15.	AIRFRAME FUEL FILTER (GASCOLATOR): SCREEN Remove and do a visual inspection for contaminants and microbial growth. Clean or replace as required. Refer to Chapter 28-20.2.C. BYPASS CHECK VALVE Do a visual inspection for condition and cleanliness. Check for correct operation. Refer to Chapter 28-20.2.C. DIFFERENTIAL PRESSURE INDICATOR Check for correct operation. Refer to Chapter 28-20.2.C.	
16.	WINDSHIELD DE-ICE MANIFOLD Visual inspection for condition and corrosion. Drain any moisture using the drain cock and install new MS20995C32 safety wire. Verify correct operation. Refer to Chapter 30-40.2.A.	

Phase B: Engine/Firewall Forward Inspections		
Task	Description	Inspector
17.	MASTER CONTROL UNIT (MCU) Perform a Visual Inspection for condition and security. Do the MCU Essential Bus Isolation Diode Check. Refer to Chapter 24-30.2.C.	
18.	AIRCRAFT BATTERIES (K003-K085 excluding K014): Clean, do a visual inspection, and charge. Do a capacity test. Refer to the latest revision of the Concorde Battery Corporation RG Series Main Aircraft Battery Component Maintenance Manual, P/N 5-0171. (K014, K086 and On): Perform Battery Diagnostics Check. Refer to Chapter 24-30.2.B.	

Signature of Mechanic or Inspector _____

Certificate Number _____

Date_____

Phase C: Operational Checks and Landing Gear Inspections

Phase C: Operational Checks and Landing Gear Inspections		
Task	Description	Inspector
1.	STALL PREVENTION SYSTEM Perform a Visual Inspection of the lift transducers for condition. Verify proper operation. Refer to Chapter 31-20.2.F.	
2.	LH AND RH PITOT HEAT AND CURRENT SENSORS Do the operational check. Refer to Chapter 34-10.2.I.	
3.	ICE MODE CHECK Perform the Lift Computer Ice Mode Check. Refer to Chapter 31-20.2.B. (K056 and On and K003 – K055 with SB-0035 only)	
4.	ICE DETECTOR Perform a Visual Inspection for conditions and security. Do the Ice Detector Operational check. Refer to Chapter 30-10.2.J. Do the Ice Detector Calibration Check. Refer to Chapter 30-10.2.J. (K056 and On and K003 – K055 with SB-0035 only)	
5.	PRESSURIZATION SYSTEM Do the emergency pressurization airflow test. Refer to Chapter 21-30.2.J. Do the ground fresh air fan test. Refer to Chapter 21-30.2.K.	
6.	DE-ICE BOOTS Perform a Visual Inspection of all boots and edge sealant for condition, leaks and attachment. Verify correct operation, (inlet lip de-ice boot K056 and On and K003 – K055 with SB-0035 only). Refer to Chapter 30-10.2.A.	
7.	WINGS CENTER ACCESS AREA Perform a Visual Inspection of the wing spars, attach fittings, and wing ground straps for condition and security. Perform a Visual Inspection of the flight control cables, pulleys, bulkhead seals, flap motor, torque tube, wiring, switches, and associated components for condition, security, and attachment. Visual inspection of the hydraulic system for condition, leaks, and hose connections. Perform a Visual Inspection of the flap actuator assembly. Make sure the flap actuator jack screw is lubricated with Lubriplate 130 AA.	

Phase C: Operational Checks and Landing Gear Inspections		
Task	Description	Inspector
8.	MAIN LANDING GEAR INSPECTION Perform a Visual Inspection of the following for condition, damage, leakage, and security: - Attachment Brackets - Landing Gear Legs (Bracket, Fork, and Axle) - Uplock Hook and Bump Stop - Wiring Harness/Switches - Landing Gear Doors - Dampers - Actuators - Uplock Actuators - Hydraulic and Brake Lines Perform the following services: - Do lubrication items. Refer to Chapter 12-20.2.E. - Service the dampers if needed. Refer to Chapter 12-10.2.E.	
9.	BRAKES Check the brake system for proper operation and brake wear. Perform a Visual Inspection of brake assemblies and brake lines for leaks, security of installation, corrosion, and damage, refer to Chapter 32-40. Check the fluid level in the brake reservoir. Inspect the brake assembly in accordance with the current revision of Aircraft Wheel And Brake By Parker Hannifin (Kaman) Maintenance Manual with Illustrated Parts List, P/N 30-191. (SN: K014, K086 and on): Inspect the wheel speed sensors, for security, installation, corrosion, and damage. Do an Operational Check of the Brake Hold system. Refer to Chapter 32-40.2.I.	
10.	MAIN WHEELS AND TIRES Perform a Visual Inspection of the wheels for condition, damage, and corrosion. Check tires for wear, damage, and inflation. Inspect, clean, and lubricate bearings and races. Refer to Chapter 32-40 and the latest revision of the Aircraft Wheel And Brake By Parker Hannifin (Kaman) CM40-434 Component Maintenance Manual with IPL for Main Wheel Assembly P/N 40-434 for detailed maintenance procedures and the Goodyear Aircraft Tire Care & Maintenance document, or Michelin Aircraft Tire and Service Manual MAT-CSM 32-45-01.	

Phase C: Operational Checks and Landing Gear Inspections		
Task	Description	Inspector
11.	NOSE LANDING GEAR INSPECTION Perform a Visual Inspection of the following for condition, damage, leakage, and security: - Landing Gear Leg (Housing, Strut, and Fork) - Uplock Hook and Bump Stop - Nose Wheel Centering Device - Wiring Harness/Switches - Landing Gear Doors - Actuator - Steering Damper - Uplock Actuator - Hydraulic Lines Perform the following services: - Do lubrication items. Refer to Chapter 12-20.2.E. - Do the Nose Wheel Centering Device Service. Refer to Chapter 32-20.2.C. - Service the strut if needed. Refer to Chapter 12-10.2.F.	
12.	STEERING SYSTEM Perform a Visual Inspection of the steering system components for condition, corrosion, damage, attachment, and operation. Refer to Chapter 32-50.2.H.	
13.	NOSE WHEEL AND TIRE Perform a Visual Inspection of the wheel for condition, damage, and corrosion. Check tire for wear, damage, and inflation. Inspect, clean, and lubricate bearings and races. Refer to Chapter 32-40 and the latest revision of the Aircraft Wheel And Brake By Parker Hannifin (Kaman) CM40-423 Component Maintenance Manual with IPL for Nose Wheel Assembly P/N 40-423 for disassembly, assembly, and maintenance procedures and the Goodyear Aircraft Tire Care & Maintenance document.	
14.	HYDRAULIC RESERVOIR Perform a Visual Inspection of the plumbing, and wiring for condition, attachment and security, and evidence of leakage. Service reservoir as required. Replace the hydraulic fluid filter. Refer to Chapter 29-10.2.C.	
15.	HYDRAULIC ACCUMULATOR Perform a Visual Inspection of the condition and security of the accumulator, hoses, and fittings. Verify the accumulator is pressurized to 1200 ± 50 psig at 70°F. Service with nitrogen (A-A-59503) as required. Refer to Chapter 12-10.2.D.	

Phase C: Operational Checks and Landing Gear Inspections		
Task	Description	Inspector
16.	HYDRAULIC SUPPRESSOR Perform a Visual Inspection of the condition and security of the suppressor, hoses, and fittings. Verify the suppressor is pressurized to 150 ± 50 psig at 70°F Service with nitrogen (A-A-59503) as required. Refer to Chapter 12-10.2.D.	
17.	LANDING GEAR OPERATIONAL CHECKS - Do the Emergency Extension Check. Refer to Chapter 29-20.2.A. - Do the Landing Gear Operational Check. Refer to Chapter 32-30.2.F. *Do the following when performing the landing Gear Operational Check:* - Check landing gear door fit in the retracted position. Refer to Chapter 32-10.2.D. Refer to Chapter 32-20.2.E. - Check for correct operation of the nose wheel centering device. Refer to Chapter 32-20.2.C. - Do the uplock hook check. Refer to Chapter 32-30.2.G. - Do the operational check of the weight on wheels switches. Refer to Chapter 32-60.2.B.	

Signature of Mechanic or Inspector _____

Certificate Number _____

Date_____

Phase D: Flight Control and Interior Inspections

Phase D: Flight Control and Interior Inspections		
Task	Description	Inspector
1.	AIRFRAME INTERIOR GENERAL INSPECTION **Note: Removal of cockpit and cabin floor panels and the overhead finish panel is required for this inspection, refer to 53-20, 25-10, and 25-20. Refer to 5-10.1 item 35 for side panel removal requirements.** COCKPIT- - Perform a Visual Inspection of the instrument panel, sub panels, displays, wiring, and plumbing for condition and attachment. - Perform a Visual Inspection of wiring, environmental system ducting, pitot static lines, de-ice lines, fuel lines and hydraulic lines in the underfloor and behind the kick panels for leaks condition, damage, and attachment. - Perform a Visual Inspection of interior structure for condition, attachment, debonding, delamination, and cracks. If damage is found, do a tap test and contact Epic Aircraft, LLC. Refer to Chapter 51-10.2.A. - Perform a Visual Inspection of interior trim panels for condition and security. CABIN - - Perform a Visual Inspection of wiring, environmental system ducting, pitot static lines, de-ice lines, and hydraulic lines for leaks condition, damage, and attachment. - Perform a Visual Inspection of terminal blocks TS101 and TS102 for condition and security of the ring terminals. Refer to Chapter 53-80.2.B. - Perform a Visual Inspection of interior structure for condition, attachment, debonding, delamination, and cracks. If damage is found, do a tap test and contact Epic Aircraft, LLC. Refer to Chapter 51-10.2.A. - Perform a Visual Inspection of interior trim panels for condition and security.	

Phase D: Flight Control and Interior Inspections		
Task	Description	Inspector
2.	EMPENNAGE INTERIOR **Note: Removal of the pressure bulkhead access panel is required for this inspection (refer to Chapter 21-30).** Perform a Visual Inspection of structure for cracks and condition. Perform a Visual Inspection of shelves, components, de-ice plumbing, tubing, and wiring for condition and attachment.	
3.	AFT PRESSURE BULKHEAD Perform a Visual Inspection for condition, debonding, security, and cracks. Inspect thoroughly around the outflow valves and adjacent fuselage structure. Inspect the outflow valves, pressurization controller, and associated wiring and plumbing for condition, attachment, and damage. Refer to Chapter 21-30.2.A.	
4.	PASSENGER/CREW DOOR Perform a Visual Inspection of the skin, structure, seal, passive door seal including the foam near the hinge, and attachment hinge for condition, security, and attachment. Inspect all moving parts, cables, and latch mechanism for security, condition, and correct rigging. Clean and lubricate the pins using Loctite™ LB8042 lithium grease, or Lubriplate No. 630-2 grease. Refer to Chapter 52-10.2.D.	
5.	EMERGENCY EXIT DOOR Perform a Visual Inspection of skin, structure, and seals for condition, security, and attachment. Confirm latch pins are fully seated into the blocks and no red is showing. **Note: Door will have to be removed per 52-20 to gain access to both seals for inspection.** Inspect all moving parts, cables, and latch mechanism for security, condition, and correct rigging. Refer to Chapter 52-20.2.A.	
6.	SEATS Perform a Visual Inspection of seats, belts, and shoulder harnesses for condition and attachment. Check for proper operation. Ensure TSO tags are present and legible on the restraints. Refer to the current revision of Millennium Concepts, Inc. Component Maintenance Manual with Illustrated Parts List, Document Numbers 2014-CMM019 and 2014-CMM022.	

Phase D: Flight Control and Interior Inspections		
Task	Description	Inspector
7.	SEAT RAILS Perform a Visual Inspection for scratches and condition. Surface scratches in the black anodizing are allowable but if damage past the anodizing into the aluminum are found, contact Epic Aircraft, LLC. Clean with isopropyl alcohol and lubricate with paraffin wax.	
8	OXYGEN Perform a Visual Inspection of the crew masks, stowage cup, hose, and hose fitting for condition and cleanliness. Refer to Chapter 35-0.2.I. Perform a Visual Inspection of the passenger masks, storage bottle, plumbing, and associated components for condition and cleanliness. Refer to Chapter 35-0.2.H.	
9.	FIRE EXTINGUISHER Check gauge, condition, and date. Inspect in accordance with NFPA 10.	
10.	FUEL AUTO SELECTOR Cycle auto selector left/right and verify that it springs back to neutral if depressed. Perform Operational Check, refer to Chapter 28-20.B.1.C	
11.	AIR CONDITIONER Verify proper operation. Perform a Visual Inspection of evaporator modules, compressor condenser module, plumbing, and wiring for condition and attachment as required by Section 7 of the latest revision of the Enviro Systems, Inc., Air Management System, System Description and Operation Manual with Illustrated Parts List for the E1000, document # 21-00-45.)	
12.	EMERGENCY LOCATOR TRANSMITTER (ELT) Perform a Visual Inspection for condition and security. Test in accordance with the latest revision of Orolia Service Letter SL S18XX501-25-01. Record the battery replacement due date.	
13.	STATIC PORTS Perform a Visual Inspection for condition and obstructions.	
14.	PITOT TUBES AND PITOT LINES (Inspect lines through wing access panels and in wing root.) Perform a Visual Inspection and drain moisture. Refer to Chapter 34-10.E.	
15.	PITOT AND STATIC LINES (Underfloor area and empennage.) Perform a Visual Inspection and drain moisture. Refer to Chapter 34-10.2.E.	

Phase D: Flight Control and Interior Inspections		
Task	Description	Inspector
16.	AILERONS Prior to wingtip removal, inspect the ailerons for operation, chafing, and binding. Perform a Visual Inspection of the structure, hinges, hardware, bearings, attachment, and ground straps for condition and corrosion. Make sure the right aileron moisture drain hole is unobstructed (the left aileron moisture drains through the trim tab wire conduit hole). Refer to Chapter 27-00.2.F. Check for correct operation, deflections, correct direction of travel, and movement is free without binding. Make sure aileron travel limits are being met with the stops at the aileron bellcranks and not limited by yoke travel. Refer to Chapter 27-10.2.K.	
17.	AILERON TAB Perform a Visual Inspection of the trim servo attachment brackets, rod assemblies, rod ends, wiring, and hinge for condition and security. Inspect bearings for looseness. Check for correct operation, deflection and indication. Refer to Chapter 27-10.2.K.	
18.	ELEVATORS Perform a Visual Inspection of the structure, hinges, hardware, bearings, torque tube, tube horns, grounding straps, and attachment for condition, and corrosion. Verify correct operation, deflections, and freedom of movement. Make sure elevator travel limits are being met with the stops at the elevator bellcrank and not limited by yoke travel. Refer to Chapter 27-30.2.K. Check the moisture drain holes are unobstructed. Refer to Chapter 27-00.2.F.	
19.	ELEVATOR TRIM TAB Perform a Visual Inspection of the trim servo attachment brackets, rod assemblies, rod ends, wiring, and hinge for condition and security. Inspect bearings for looseness. Check for correct operation, deflection and indication. Refer to Chapter 27-30.2.K. Check the moisture drain hole is unobstructed. Refer to Chapter 27-00.2.F.	
20.	RUDDER Perform a visual inspection of the structure, hinges, hardware, bearings, and ground straps for condition and attachment. Make sure the moisture drain hole is unobstructed. Refer to Chapter 27-00.2.F. Check for correct operation and deflections. Make sure rudder travel limits are being met with the stops at the lower rudder bellcrank and not limited by pedal travel. Refer to Chapter 27-20.2.N.	

Phase D: Flight Control and Interior Inspections		
Task	Description	Inspector
21.	RUDDER TRIM TAB Perform a Visual Inspection of the trim motor attachment brackets, rod assemblies, rod ends, wiring, and hinge for condition and security. Inspect bearings for looseness. Make sure the moisture drain hole is unobstructed. Refer to Chapter 27-00.2.F. Check for correct operation, deflection and indication. Refer to Chapter 27-20.2.N.	
22.	FLAPS - Perform a Visual Inspection for condition. Check hinges, hinge fairings, horns, rod ends, bearings, push rods, torque tube assembly, deflections, and attachment. Refer to Chapter 27-50.2.I. Make sure the moisture drain holes are unobstructed. Refer to Chapter 27-00.2.F. Flight is prohibited if any of the flaps hinge fairings are missing or damaged. - Perform the secondary limit switch check. Refer to Chapter 27-50.2.J.	
23.	YOKE Perform a Visual Inspection for condition, attachment, and full travel without binding. Check switches for condition and operation.	
24.	FLIGHT CONTROL CABLES Perform a Visual Inspection of the aileron, elevator, and rudder cables, cable rod ends, pulleys, brackets, and associated components for condition, corrosion, broken strands, tension, security, and correct safetying. Refer to Chapter 27-0.2.B.	
25.	RUDDER PEDALS Perform a Visual Inspection of the pedals, torque tubes, pushrods, and associated hardware for condition, attachment, and security. Refer to Chapter 27-10.2.E.	
26.	RUDDER LIMITER Perform a Visual Inspection of the rudder limiter for condition and attachment. Perform the rudder limiter lubrication. Refer to Chapter 27-20.2.G.	
27.	AUTOPILOT - Perform a Visual Inspection of the servos for condition and attachment. - Check bridle cable tensions *(SN: K003-K010)* Refer to Chapter 22-10.2.L., *(SN: K011 and on and K003-K004 with SB-0017)* Refer to Chapter 22-11.2.G. - Do the Autopilot Operational Checkout *(SN: K003-K010)* Refer to Chapter 22-10.2.I., *(SN: K011 and on and K003-K004 with SB-0017 only)* Refer to Chapter 22-11.2.H.	

Phase D: Flight Control and Interior Inspections		
Task	Description	Inspector
28.	STATIC WICKS AND BASES Perform a Visual Inspection for security and condition. Do a static wick base electrical continuity test. Refer to Chapter 23-60.2.B. Test the wick for electrical resistance. Refer to Chapter 23-60.2.A.	
29.	DE-ICE SYSTEM IN-LINE FILTER Replace the de-ice system in-line filter. Refer to Chapter 30-10.2.D.	
30.	LANDING GEAR BLOWDOWN BOTTLE Perform a Visual Inspection of the plumbing, fittings, tank, handles, and nitrogen burst disc for condition, security, and leaks. Check nitrogen service. Service as required. Refer to Chapter 12-10.2.G.	
31.	WING GENERAL INSPECTION - Perform a Visual Inspection of the wing skin, panels, fairing and structure for damage, cracks, delamination, and debonding. Do a tap test and contact Epic Aircraft for disposition. Refer to Chapter 51-10.2.A. - Perform a Visual Inspection of fuel tank access panels and fuel drains for leaks. Check fuel caps for proper operation. - Perform a Visual Inspection of wiring for attachment and damage. make sure wiring in the wing tip does not interfere with the aileron bellcranks.	

Signature of Mechanic or Inspector _____

Certificate Number _____

Date_____

UNSCHEDULED MAINTENANCE INSPECTIONS

1. Description

Unscheduled maintenance checks for special or unusual conditions such as overweight or hard landings, engine and airframe overspeed, severe air turbulence and maneuvers, lightning strike, bird strike, and engine chip light inspections are given in this chapter.

A hard landing is defined as landing with a descent rate that exceeds 600 feet per minute.

Log book entry
An entry covering the extent of inspection, damage, and repairs must be noted in the permanent records.

Note: Due to the variety and degree of structural damage which may occur, the repairs or replacement procedures must be based on the inspection findings of the individual airplane. If significant damage outside of the scope of this manual has occurred due to unusual conditions, contact the technical support team at Epic Aircraft, LLC.

2. Maintenance Practices

Table 5-50.1: Unscheduled Maintenance Inspections

Description	Component	Inspection Required
Inspection after hard landing	Wheels and tires	Inspect for excessive wear, splits in the tread and sidewall, bottoming out or folding over sidewalls. Inspect wheels and wheel bearings. Refer to the current revision of the Goodyear Aircraft Tire Care & Maintenance Manual.

Any structure or components in question must be further explored. Shock loading may be transmitted from one structural member to another, carefully inspect surrounding and supporting structures. Contact technical support at Epic Aircraft, LLC for questions concerning your condition.	Landing gear struts	Check attachment for cracks and damage. Check for leaks.
	Brakes	Check brake lines, calipers and linings for leaks and damage. Check for brake assembly discoloration.
	Landing gear attach brackets	Inspect for attachment, check torque on bolts, check spar, rib and surrounding structure for cracks and damage.
	Surrounding wheel well structure	Inspect for debonding, cracks, deformation, attachment of all components.
	Rib 3 web and rib 3 to lower skin bondline	Inspect for debonding, cracks, deformation, attachment of all components.
	Spar saddle aft web and spar saddle to fuselage skin bondline	Inspect for debonding, cracks, deformation, attachment of all components.
	Firewall tunnel/dome interface.	Inspect for debonding, cracks, deformation, attachment of all components.
	Landing gear actuators	Inspect for condition, leaks, and correct attachment.
	Operational Inspection	Place the airplane on jacks. Do a minimum of five gear extension and retractions. Refer to Chapter 32-30.2.F.

Inspection after turbulence	Wings	Inspect for fuel leaks, cracks, debonding, delamination and cracked paint.
An airplane subjected to high G loading must be inspected for return to service. This inspection will determine if any external damage and internal structural failure has occurred.	Wing Spars	Remove the belly panels (refer to Chapter 57-10). Inspect spar attach points, surrounding structure for damage, condition, delamination, loose bolts or missing hardware. Use a scope/mirror inspection of the upper spar cap.
	Primary Controls	Check for freedom of movement. Check all flight control attachment points for condition and correct operation. Perform an end-to-end check of the flight control system load path from pilot controls through push-pull rods, cables, and control horns for condition.
	Trim	Check all trim tabs for smooth operation and freedom of movement. Check for correct attachment.
	Wing Box/Spar Attachment	Remove the belly panels (refer to Chapter 57-10) and inspect wing spar attach bolts, fittings, spar saddle attachment, surrounding structure and associated components for condition, cracks, delamination, and attachment.
	Fuselage	Inspect entire length of skin surface for cracks, fractures, delamination, and cracked paint.
	Empennage	Inspect entire length of skin surface for cracks, fractures, delamination, and cracked paint.

	Cabin	Check for loose equipment, furnishings for correct attachment and security. Check panels, switches, and all visible items for attachment and security

Inspection after lightning strike	Propeller	Refer to the current revision of the Hartzell Propeller Owner's Manual, Manual No. 149 for the 4 bladed propeller or Hartzell Propeller Owner's Manual, Manual No. 147 for the 5 bladed propeller, Section 61, Special Inspections. Refer to Section 30-60 of this manual for inspection/maintenance of the propeller de-ice system.
	Powerplant	Inspect. Refer to the current revision of Pratt & Whitney Engine Maintenance Manual, P/N: 3036132. Verify proper function of all powerplant accessories in accordance with the accessory manufacturer's instructions.
	All External Surfaces.	Check for arcing and heat damage along the current path. Check for skin delamination. Check bearings and attachments if strike path is through a movable joint. Check all static dischargers for correct ground and operation. Check for freedom of movement. Check all flight control attachment points for condition and correct operation. Perform an end-to-end check of the flight control system load path from pilot controls through push-pull rods, cables, and control horns for condition

	Electrical	Check all fuses and circuit breaker protection for condition and correct operation. Check standby compass for correct operation. Verify fuel indication on PFD is functioning as intended. Inspect antennas for damage, condition and correct operation. Do a static wick base electrical continuity test and test the wick for electrical resistance (refer to Chapter 23-60.2.A.(4) and 23-60.2.B.(3). Inspect all bonding straps. Check all external lights and trim actuator function. Check flap function. Check autopilot function and inspect autopilot servos and bridal cables for damage.
	Control Surfaces	Check for arcing and heat damage along the current path. Check for skin delamination. Check bearings and attachments if strike path is through a movable joint. Inspect all control cables and cable pulleys. Inspect auto pilot servos and bridal cables. Inspect all pushrods. Inspect bonding jumpers.
	De-Ice	Verify De-ice function. Refer to Chapter 30-10.2.A.(6). Check pneumatic de-ice boots for punctures.

Sudden engine stop.	Propeller	The propeller must be overhauled or replaced. Refer to the current revision of Hartzell Manual 149 for 4 bladed propellers and Hartzell Manual 147 for 5 bladed propellers.
Suspect components must be further explored to determine airworthiness. Consult Epic Aircraft, LLC for details concerning your condition.	Powerplant	Inspect. Refer to the current revision of Pratt & Whitney Engine Maintenance Manual, P/N: 3036132.
	Propeller Governor	Overhaul or replace. Refer to the current revision of Pratt & Whitney Engine Maintenance Manual, P/N: 3036132.
	Propeller Overspeed Governor	Overhaul or replace. Refer to the current revision of the Woodward Governor Company Bulletin 33048 Maintenance Manual, P/N 33048. Overhaul requires Woodward Overhaul Kit 8932-430.
	Propeller Tachometer Generator	Overhaul or replace
	Vibration Isolators	Replace. Refer to Chapter 71-20.
	Engine mount	Check for cracks, damage, and general condition. Inspect fuselage firewall attachment points.

Inspection for overspeed	Propeller	Inspect. Refer to the current revision of Hartzell Manual 149 for 4 bladed propellers and Hartzell Manual 147 for 5 bladed propellers.
	Powerplant	Inspect. Refer to the current revision of Pratt & Whitney Engine Maintenance Manual, P/N: 3036132.
	Airframe	Inspect control surfaces and attachment points for cracks and damage.

CHAPTER
6

Dimensions and Areas

This Page Intentionally Left Blank

List of Effective Pages

Chapter/Section	Page Number	Effective Date
6-Title	Page 1	02 Jan 2020
6-Title	Page 2	02 Jan 2020
6-LOEP	Page 1	08 Sep 2026
6-LOEP	Page 2	02 Jan 2020
6-TOC	Page 1	08 Sep 2026
6-TOC	Page 2	02 Jan 2020
6-00	Page 1	14 Jul 2021
6-00	Page 2	14 Jul 2021
6-00	Page 3	13 Apr 2020
6-00	Page 4	02 Jan 2020
6-00	Page 5	02 Jan 2020
6-00	Page 6	02 Jan 2020
6-00	Page 7	08 Sep 2026
6-00	Page 8	02 Jan 2020
6-00	Page 9	02 Jan 2020
6-00	Page 10	02 Jan 2020

This Page Intentionally Left Blank

Table of Contents

List of Effective Pages ..... 6-LOEP / Page 1
Table of Contents ..... 6-TOC / Page1

Paragraph **Page Number**

Dimensions and Areas

1. General ..... 6-00 / Page 1
2. Dimensions and Areas ..... 6-00 / Page 1
   - A. General ..... 6-00 / Page 1
   - B. Cabin ..... 6-00 / Page 1
   - C. Wings ..... 6-00 / Page 1
   - D. Flaps ..... 6-00 / Page 2
   - E. Ailerons ..... 6-00 / Page 2
   - F. Horizontal Stabilizer ..... 6-00 / Page 2
   - G. Elevator ..... 6-00 / Page 2
   - H. Vertical Stabilizer ..... 6-00 / Page 2
   - I. Rudder ..... 6-00 / Page 2
   - J. Landing Gear ..... 6-00 / Page 2
3. Control Surface Travel Limits and Cable Tension ..... 6-00 / Page 2
   - A. Aileron ..... 6-00 / Page 2
   - B. Elevator ..... 6-00 / Page 3
   - C. Rudder ..... 6-00 / Page 3
   - D. Flaps ..... 6-00 / Page 3
4. Access Panels ..... 6-00 / Page 7

This Page Intentionally Left Blank

DIMENSIONS AND AREAS

1. General

This chapter gives text, diagrams, and figures that show the dimensions, area, stations, access panels, and locations of the structural members of the airplane.

2. Dimensions and Areas

A. General

Length	35.80 ft	10.91 m
Wing Span	43.00 ft	13.11 m
Height	12.48 ft	3.80 m
Propeller Diameter (Maximum)	8.75 ft	2.66 m
Wheel Track (Main to Main)	10.29 ft	2.83 m

B. Cabin

Width	53 in	1.3 m
Height	52.5 in	1.3 m
Length	16 ft.	4.8 m
Volume	309.16 ft^3	8.75 m^3
Baggage Compartment Height		
Maximum	47.7 in	1.21 m
Minimum	41.6 in	1.05 m
Baggage Compartment Width		
Maximum	35.8 in	0.90 m
Minimum	33.2 in	0.84 m
Baggage Compartment Length	24.1 in	0.61 m
Baggage Compartment Volume	18.87 ft^3	0.53 m^3

C. Wings

Span	43.03 ft	13.11 m
Area	207.27 ft^2	19.26 m^2
Wing Loading	38.60 lb/ft^2	188.41 kg/m^2
Aspect Ratio	8.93	
Wing Dihedral	4.0°	

D. Flaps

Span ..... 11.13 ft ..... 3.39 m
Area ..... 16.80 ft^2 ..... 1.56 m^2

E. Ailerons

Span ..... 5.25 ft ..... 1.60 m
Area ..... 5.97 ft^2 ..... 0.55 m^2

F. Horizontal Stabilizer

Span ..... 17.25 ft ..... 5.26 m
Area ..... 55.30 ft^2 ..... 5.14 m^2
Aspect Ratio 5.39

G. Elevator

Span ..... 8.63 ft ..... 2.63 m
Area ..... 18.39 ft^2 ..... 1.71 m^2

H. Vertical Stabilizer

Span ..... 7.61 ft ..... 2.32 m
Area ..... 30.17 ft^2 ..... 2.80 m^2
Aspect Ratio 1.92

I. Rudder

Span ..... 7.61 ft ..... 2.32 m
Area ..... 12.98 ft^2 ..... 1.21 m^2

J. Landing Gear

Wheel Track (Main to Main) ..... 10.29 ft ..... 2.83 m
Wheel Base (Main to Nose) ..... 10.17 ft ..... 3.10 m

3. Control Surface Travel Limits and Cable Tension

A. Aileron

Aileron Up: ..... 20° ± 2°
Aileron Down: ..... 15.5° ± 0.5°
Aileron Trim Up: ..... 17° ± 2°
Aileron Trim Down: ..... 17° ± 2°
Aileron Cable Tension: ..... 24 to 28 lbs (refer to Chapter 27-00)

B. Elevator

Elevator Up: .....25.5° to 25.8°
Elevator Down: .....13.5° ± 2°
Elevator Trim Up: .....7.5° ± 1°
Elevator Trim Down: .....19.5° ± 0.5°
Elevator Cable Tension: .....24 to 28 lbs (refer to Chapter 27-00)

C. Rudder

Rudder Right: .....18° to 19.5°
Rudder Left.....18° to 19.5°
Rudder Trim Left: .....20° ± 0.5°
Rudder Trim Right: .....5° ± 1°
Rudder Limiter Left..... 5.5° to 6.5°
Rudder deflection to the left is limited to 5.5° to 6.5° when the Rudder Limiter is engaged.
Rudder Cable Tension: .....24 to 28 lbs (refer to Chapter 27-00)

D. Flaps

Flap Retracted: ..... 0°
Flap Takeoff: .....12° ± 2°
Flap Landing: .....42.8° to 43.4°

Note: Up to 0.5° of rigging asymmetry may be used to correct flight characteristics resulting from inherent manufacturing variance.

Figure 6-00.1: Airplane Overall Dimensions

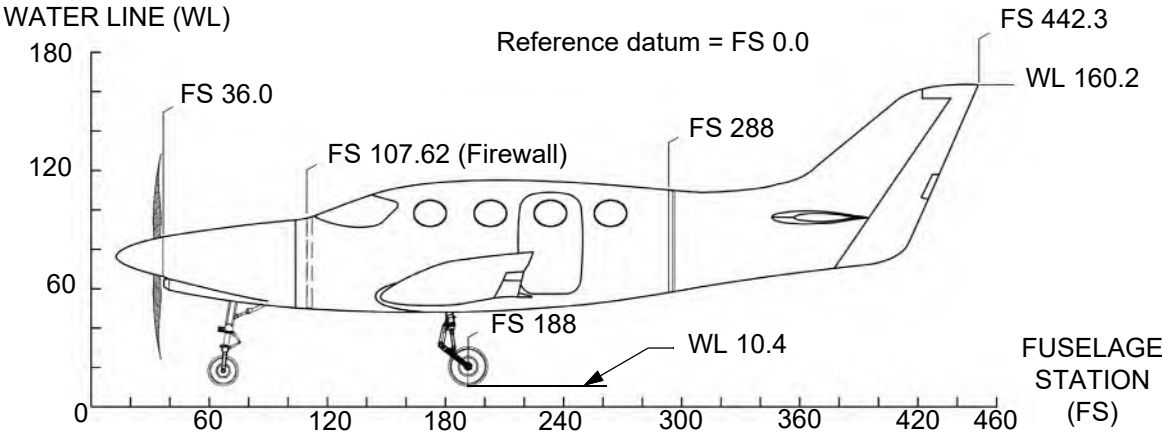

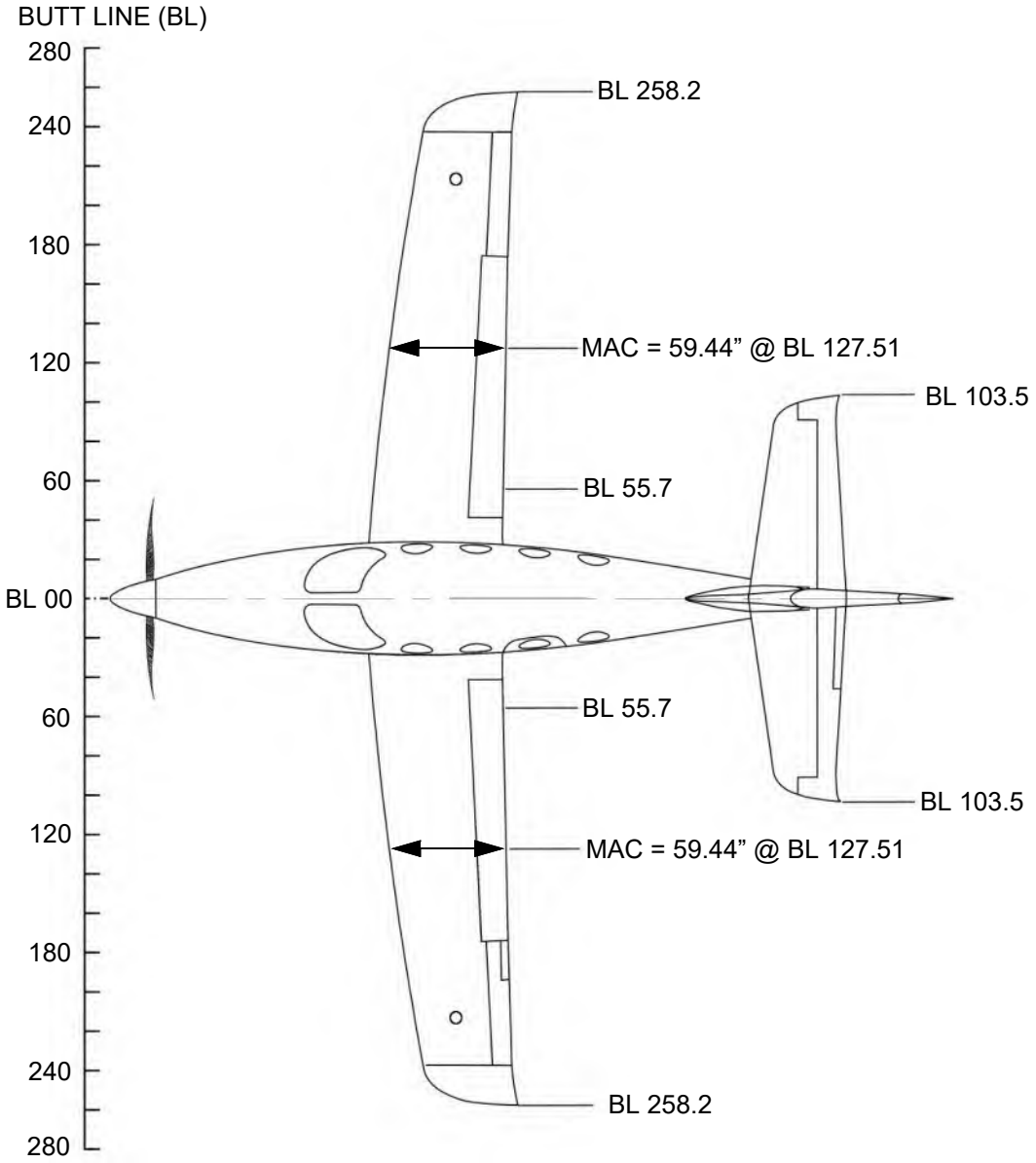

Figure 6-00.2: Wing Stations

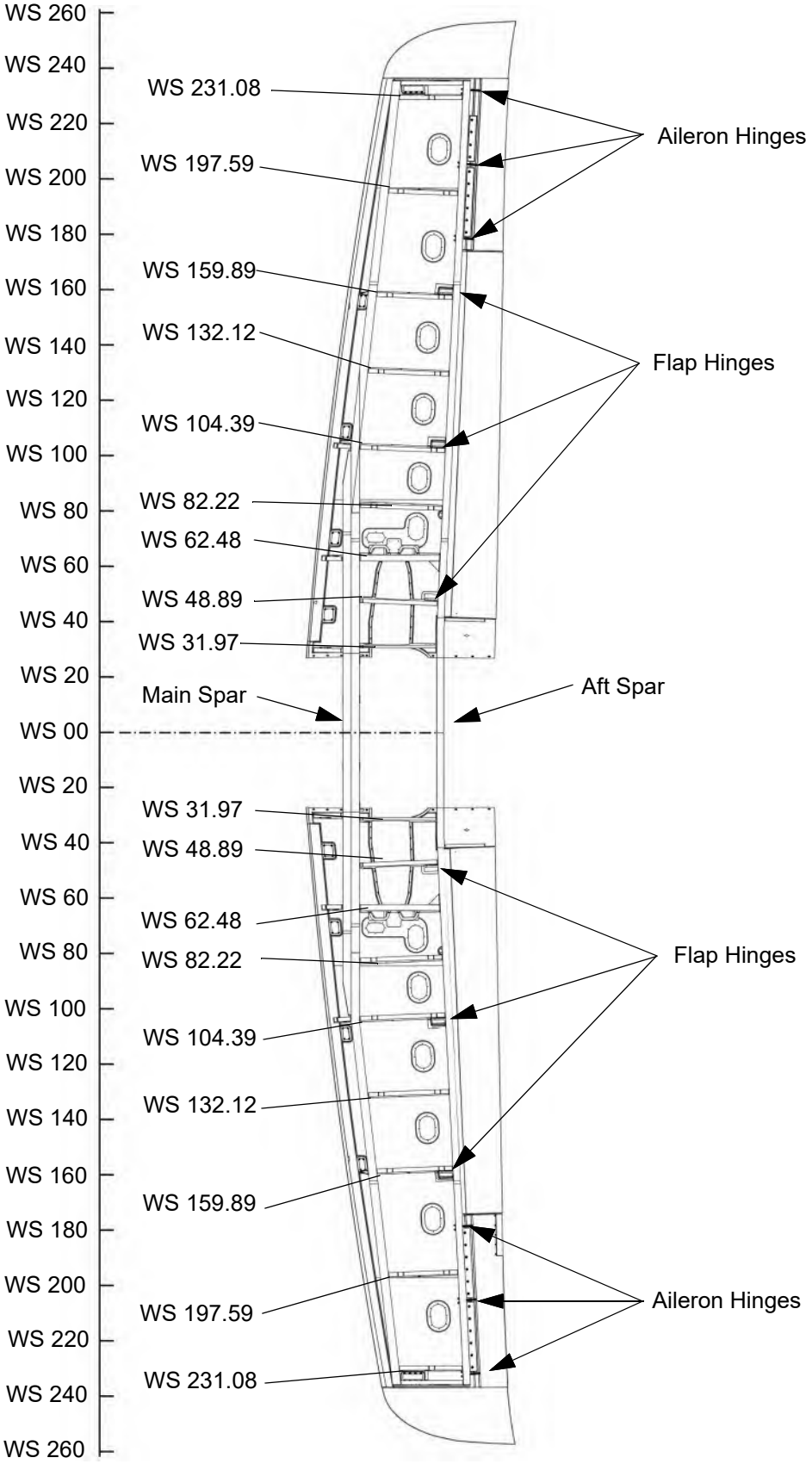

Figure 6-00.3: Elevator Stations

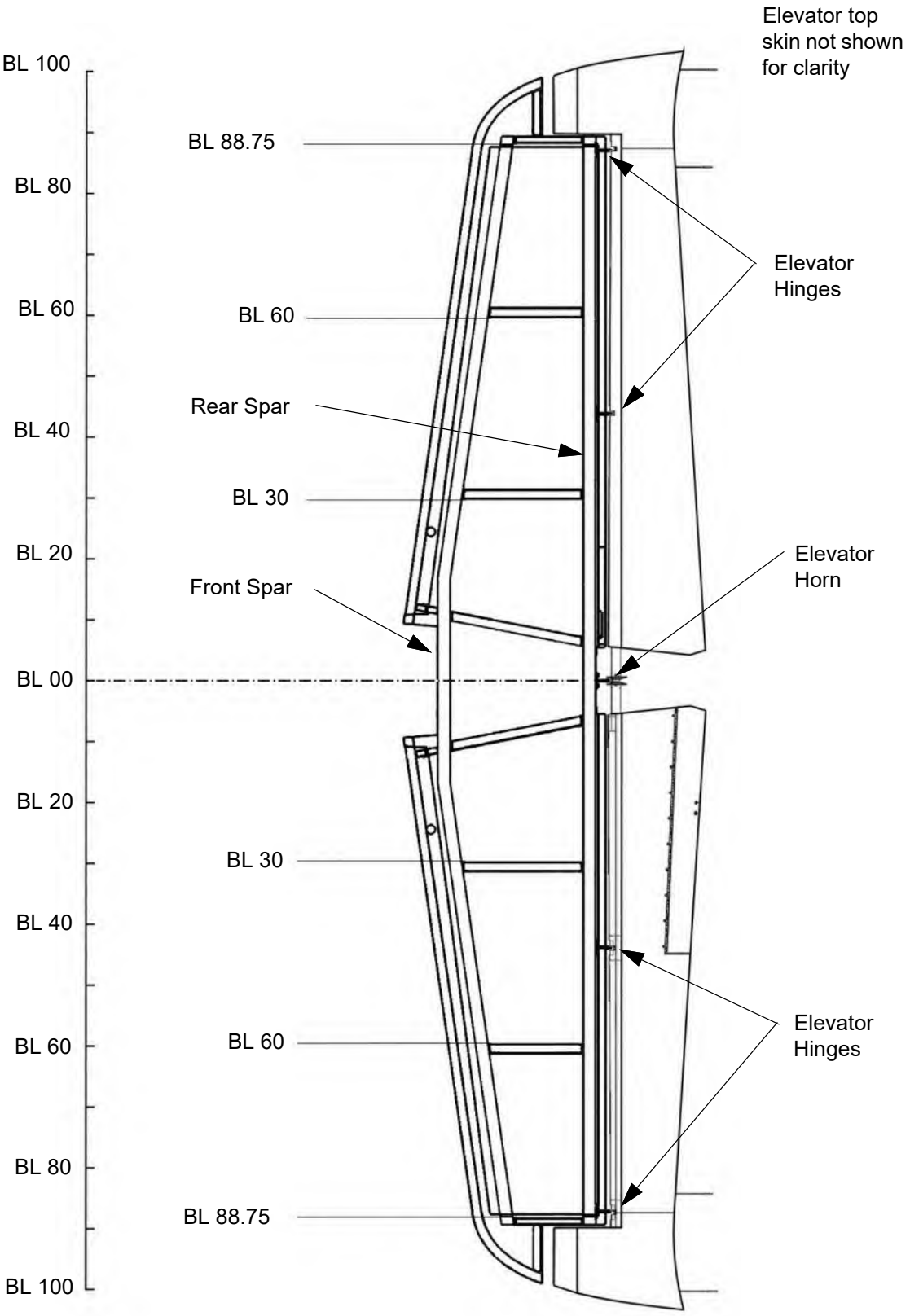

4. Access Panels

Figure 6-00.4: Wing and Elevator Access Panels

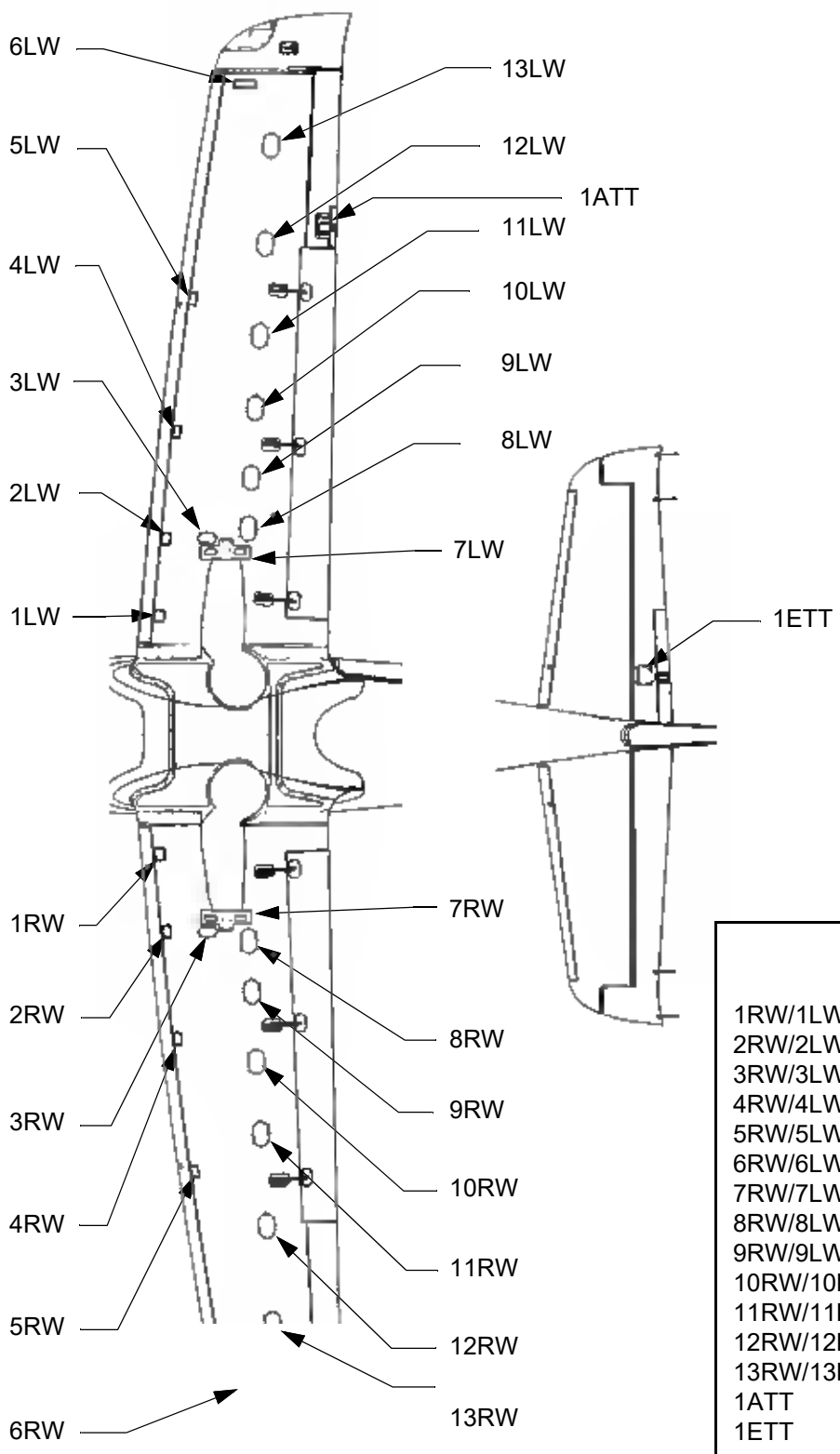

LEGEND

1RW/1LW	Aileron Cable Turnbuckle
2RW/2LW	Fuel Line
3RW/3LW	Fuel Drains
4RW/4LW	Aileron Cable Pulley
5RW/5LW	Stall Prevention Detector
6RW/6LW	Pitot and Aileron Bellcrank
7RW/7LW	Main Gear
8RW/8LW	Fuel Pump
9RW/9LW	Fuel Bay
10RW/10LW	Fuel Bay
11RW/11LW	Fuel Bay
12RW/12LW	Fuel Bay
13RW/13LW	Fuel Bay
1ATT	Aileron Trim Tab
1ETT	Elevator Trim Tab

Figure 6-00.5: Empennage Access Panels

LEGEND

1RE/1LE	Horizontal Stabilizer
2RE	Air Inlet
2LE	Rudder and Elevator Cable
3LE	Elevator Cable
4LE	Magnetometer
1RTT	Rudder Trim Tab
5LE	Air Outlet

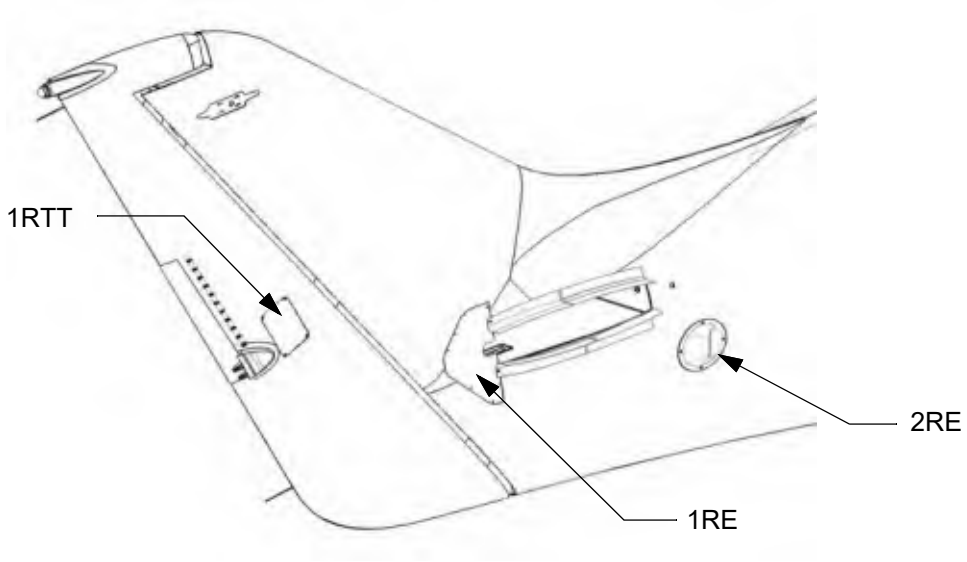

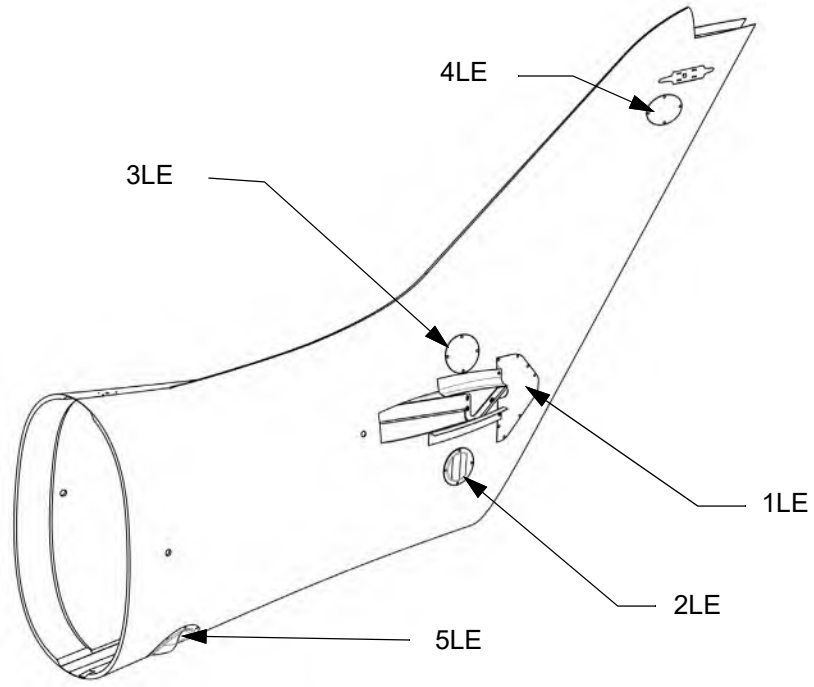

Figure 6-00.6: E1000 Classic and GX Cabin Access Panels (SN K003 - K0085, except K014)

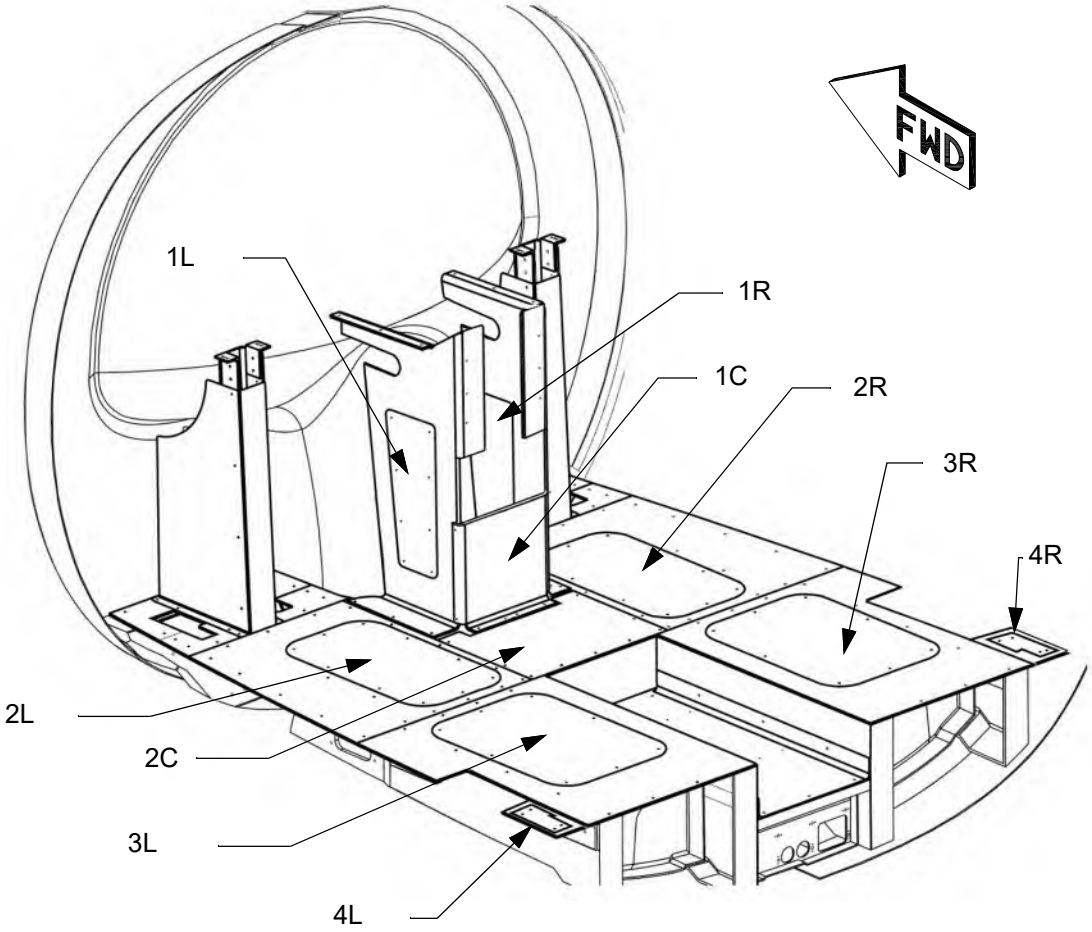

LEGEND

1C/2C/1R/1L	Fuel Selector Valve
2R/2L	Rudder and Elevator Controls
3R/3L	Rudder and Elevator Controls
4R/4L	Fuel Lines and Wing Attachment Pins

Figure 6-0.1: E1000 AX Classic Cabin Access Panels (K014, K086 and On)

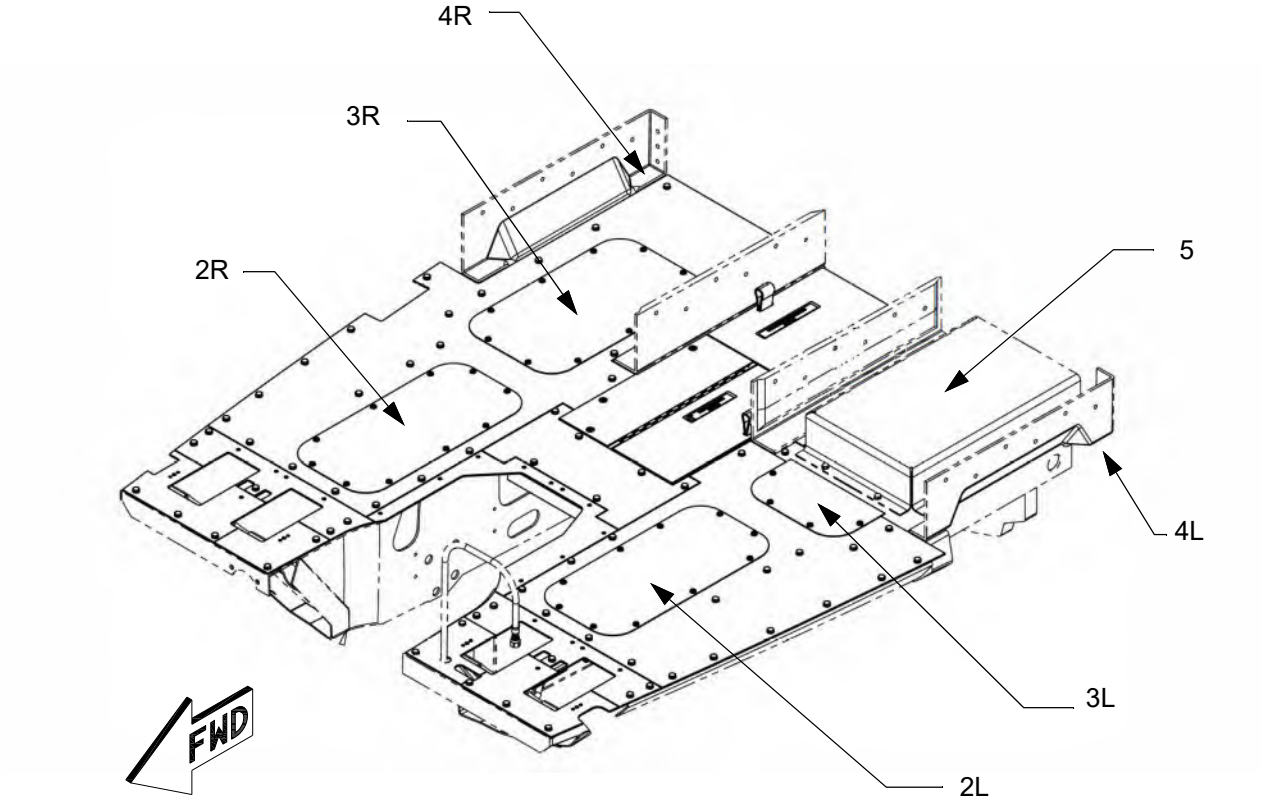

LEGEND

2R/2L	Rudder and Elevator Controls
3R/3L	Rudder and Elevator Controls
4R/4L	Fuel Lines and Wing Attachment Pins
5	Brake Servo

CHAPTER
7

Lifting and Shoring

This Page Intentionally Left Blank

List of Effective Pages

Chapter/Section	Page Number	Effective Date
7-Title	Page 1	02 Jan 2020
7-Title	Page 2	02 Jan 2020
7-LOEP	Page 1	16 May 2022
7-LOEP	Page 2	02 Jan 2020
7-TOC	Page 1	02 Jan 2020
7-TOC	Page 2	02 Jan 2020
7-00	Page 1	13 Apr 2020
7-00	Page 2	02 Jan 2020
7-10	Page 1	16 May 2022
7-10	Page 2	14 Jul 2021
7-10	Page 3	02 Jan 2020
7-10	Page 4	02 Jan 2020

This Page Intentionally Left Blank

Table of Contents

List of Effective Pages ..... 7-LOEP / Page 1
Table of Contents ..... 7-TOC / Page1

Paragraph **Page Number**

Lifting and Shoring

1. General ..... 7-00 / Page 1
2. Tools ..... 7-00 / Page 1

Jacking

1. Description ..... 7-10 / Page 1
2. Maintenance Practices ..... 7-10 / Page 1
   A. Jacking the Airplane ..... 7-10 / Page 1
   B. Hoisting the Airplane ..... 7-10 / Page 2

This Page Intentionally Left Blank

LIFTING AND SHORING

1. General

During normal maintenance the airplane may need to be lifted and shored. This chapter describes the equipment and procedures for correctly lifting the plane for inspections, maintenance, overhaul, repair, and abnormal conditions. Lifting pins at the jacking points on the wings and fuselage give contact points for safe jacking. The jacking site should be level ground and protected from wind, preferably inside a hangar with the doors closed.

2. Tools

Table 7-00.1: Special Tools

Item	Part Number	Supplier
Hydraulic Aircraft Jacks 10000 lb capacity	-	Any
Lifting Pins	FK07100001	Epic Aircraft, LLC
Tie Down Pin	FK07100002	Epic Aircraft, LLC
Aircraft Chocks	-	Any
Wing Brace	-	Any
Cotton Blankets	-	Any

This Page Intentionally Left Blank

JACKING AND HOISTING

1. Description

The airplane is lifted using support at three jack points. The jack points are located in the left and right wings at WS 192.94 and on the firewall. Each jack point is threaded for 1/20-20 jack pins or tie-down rings.

2. Maintenance Practices

A. Jacking the Airplane

(1) Raising the Airplane

(a) Ensure the SPS CMP 1A, SPS CMP 1B, SPS CMP 2A, SPS CMP 2B, GEAR CONTROL, IGNITER, L PITOT HEAT, L PITOT HT CTRL, L STALL HEAT, R STALL HEAT, R PITOT HEAT, R PITOT HT CTRL and PUSHER circuit breakers are OUT.

(b) Put the airplane on a hard flat surface. Ensure sufficient clearance from all surrounding obstacles.

(c) Install each of the 3 jacking pins into the jacking points at the wings and the firewall. Do not over tighten the pins.

(d) Put the jacks under the jacking points then raise the jacks to make firm contact with the jacking pins.

(e) Begin jacking at the same time to keep the airplane as level as possible.

Note: Raise the airplane no further than required for the work to be done.

(f) Immediately after jacking, engage the jack locks.

(g) Position the tail stand then extend it as necessary.

(2) Lowering the Airplane

(a) Remove the tail stand before lowering the airplane.

(b) Ensure the airplane has sufficient clearance from all surrounding obstacles.

(c) Verify all landing gear are in the down and locked position.

(d) Disengage the jack locks on all the jacks.

(e) Release pressure on all the jacks at the same time to keep the airplane as level as possible.

(f) When the airplane wheels are on the ground remove the jacks then secure the airplane using wheel chocks.

CAUTION: Lower the airplane at a speed that maintains control and a level attitude.

(g) Remove the jacks and jack pins. Stow the jack pins in the baggage compartment.

(h) Reset the SPS CMP 1A, SPS CMP 1B, SPS CMP 2A, SPS CMP 2B, GEAR CONTROL, IGNITER, L PITOT HEAT, L PITOT HT CTRL, L STALL HEAT, R STALL HEAT, R PITOT HEAT, R PITOT HT CTRL and PUSHER circuit breakers.

B. Hoisting the Airplane

If the airplane must be hoisted because the use of jacks is not desired or is impractical use the following procedures. Use a hoist with a minimum capacity of 10000 lbs.

(1) Raising the Airplane

(a) Ensure the SPS CMP 1A, SPS CMP 1B, SPS CMP 2A, SPS CMP 2B, GEAR CONTROL, IGNITER, L PITOT HEAT, L PITOT HT CTRL, L STALL HEAT, R STALL HEAT, R PITOT HEAT, R PITOT HT CTRL and PUSHER circuit breakers are OUT.

(b) Remove the upper cowling.

(c) Put lifting straps around the fuselage immediately in front of the horizontal stabilizer. Use lifting straps with a minimum capacity of 10000 lbs.

(d) Attach lifting straps to each of the two upper engine mount arms where they are bolted to the firewall.

WARNING: Ensure the lifting straps are attached to the upper engine mount arms and the spreader bar using hardware of adequate strength and capable of secure attachment.

(e) Raise the airplane slowly.

(2) Lowering the Airplane

(a) Ensure the landing gear is down and locked.

(b) Lower the airplane until its weight is supported by the landing gear and the lifting straps are loose.

(c) Remove the lifting straps.

(d) Reset the SPS CMP 1A, SPS CMP 1B, SPS CMP 2A, SPS CMP 2B, GEAR CONTROL, IGNITER, L PITOT HEAT, L PITOT HT CTRL, L STALL HEAT, R STALL HEAT, R PITOT HEAT, R PITOT HT CTRL and PUSHER circuit breakers.

Figure 7-10.1: Jacking and Hoisting

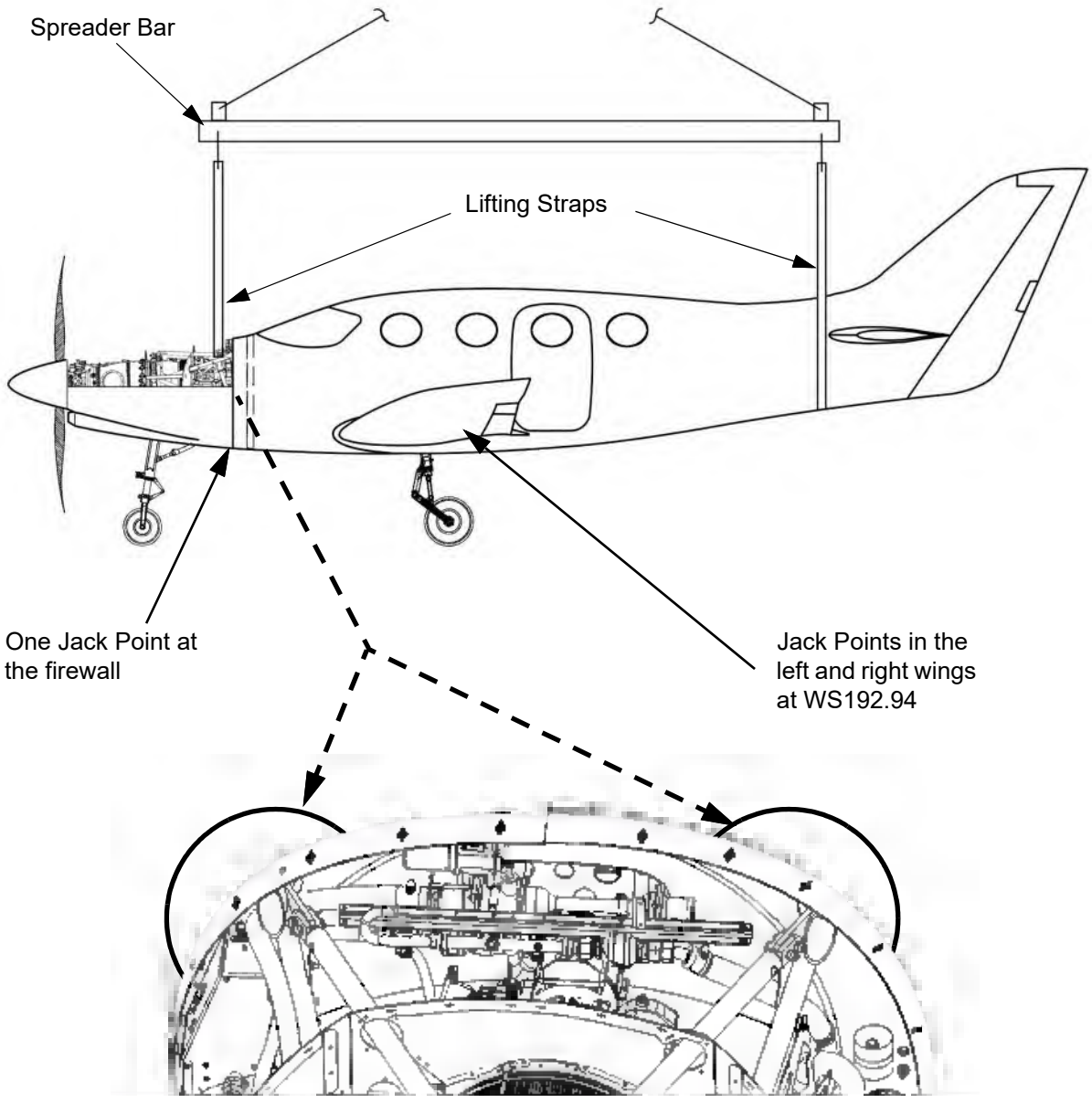

This Page Intentionally Left Blank

CHAPTER
8

Leveling and Weighing

This Page Intentionally Left Blank

List of Effective Pages

Chapter/Section	Page Number	Effective Date
8-Title	Page 1	02 Jan 2020
8-Title	Page 2	02 Jan 2020
8-LOEP	Page 1	19 Jan 2023
8-LOEP	Page 2	02 Jan 2020
8-TOC	Page 1	02 Jan 2020
8-TOC	Page 2	02 Jan 2020
8-00	Page 1	13 Apr 2020
8-00	Page 2	02 Jan 2020
8-10	Page 1	19 Jan 2023
8-10	Page 2	19 Jan 2023
8-10	Page 3	19 Jan 2023
8-10	Page 4	19 Jan 2023
8-10	Page 5	19 Jan 2023
8-10	Page 6	19 Jan 2023
8-20	Page 1	14 Jul 2021
8-20	Page 2	02 Jan 2020

This Page Intentionally Left Blank

Table of Contents

List of Effective Pages ..... 8-LOEP / Page 1
Table of Contents ..... 8-TOC / Page1

Paragraph **Page Number**

Leveling and Weighing
1. General ..... 8-00 / Page 1
2. Tools ..... 8-00 / Page 1

Weighing and Balancing
1. Description ..... 8-10 / Page 1
   A. Measuring Arms ..... 8-10 / Page 1
   B. Weighing the Airplane - Empty Fuel ..... 8-10 / Page 2
   C. Weighing the Airplane - Full Fuel ..... 8-10 / Page 4

Leveling
1. Description ..... 8-20 / Page 1
2. Maintenance Practices ..... 8-20 / Page 1
   A. Leveling ..... 8-20 / Page 1

This Page Intentionally Left Blank

LEVELING AND WEIGHING

1. General

This chapter gives information and procedures for leveling and weighing the airplane. Finding the center of gravity (CG) of the airplane is critical for safe flight. The airplane must be operated within the specified load and CG envelope to get expected performance, flight characteristics, and for safety.

Modification of the airplane, removal or addition of equipment, or any activity that affects the weight or location of the CG requires the empty weight of the airplane and the CG be remeasured.

2. Tools

Table 8-00.1: Special Tools

Item	Part Number	Supplier
Hydraulic Aircraft Jacks	-	Any
Load Cells (4000 lb to 6000 lb capacity)	-	Any
Load Cell Reader	-	Any
Lifting Pins	FK07100001	Epic Aircraft, LLC
Tie Down Pin	FK07100002	Epic Aircraft, LLC
Tail Stand	-	Any
Aircraft Chocks	-	Any
Cotton Blankets	-	Any
Plumb Bob	-	Any

This Page Intentionally Left Blank

WEIGHING

1. Description

This chapter gives information and procedures for weighing the airplane. Finding the empty weight center of gravity (EWCG) of the airplane is critical for safe flight. The airplane must be operated within the specified load and CG envelope to get expected performance, flight characteristics, and for safety.

Modification of the airplane, removal or addition of equipment, or any activity that affects the weight or location of the CG makes it necessary that the empty weight of the airplane and the EWCG be remeasured. Alternate procedures are provided to calculate the EWCG with empty or full fuel tanks.

A. Measuring Arms

(1) If weighing from other than the jackpoints, measure the arms as follows:

(a) Drop a plumb bob on each side from forward face of the firewall (FS107.62) onto the floor (refer to Figure 8-10.2.). Put the plumb bob as far outboard as possible, tangent to the cowl. Mark the floor with a dot at each plumb bob location.

(b) Connect the two dots and measure halfway between to get the airplane centerline.

(c) Drop a plumb bob from the center of the fuselage close to the rudder. Connect this location to the forward reference to get the airplane centerline.

(d) Continue this line forward to establish the Reference Datum FS 0 which is 107.62 inches forward of the front face of the firewall.

(e) Drop a plumb bob from the center of each weighing point. Mark the floor with a dot at each plumb bob location then extend a straight line between the two points crossing the previously established airplane centerline.

(f) Measure and record the distance from FS 0 to the location of the weighing point as marked on the airplane centerline.

B. Weighing the Airplane - Empty Fuel

(1) Prepare the airplane.

(a) Service the engine oil if needed, refer to Chapter 12-10.2.B.

(b) Service the brake reservoir if needed, refer to Chapter 12-10.2.C.

(c) Service the hydraulic reservoir if needed, refer to Chapter 12-10.2.D.

(d) Inflate the tires to the recommended operating pressures, refer to Chapter 12-10.2.H.

(e) Drain the fuel. Refer to Chapter 12-20.2.A.2.

Note: Approximately 13.4 gallons (6.7 gallons per wing) of unusable fuel will remain in the tanks when they are drained. This fuel is part of the basic empty weight.

(f) Move all seats to the most aft position.

(g) Make sure the flaps are in the UP position.

(h) Put all control surfaces in the neutral position.

(i) Verify installed equipment and its location against the equipment list.

(2) Weigh the airplane.

(a) Put the airplane on a level area. The preferred location is in a hangar with the doors closed to eliminate the effect of wind on the airplane and the scales.

(b) Attach a load cell to each hydraulic jack. Ensure the load cells are centered on the load reaction pads on the stands.

(c) Turn on the load cell reader then verify all load cells read 0.

(d) Level the airplane using the jacks, refer to Chapter 8-20.2.A.

Note: Make sure all tires are clear of the ground.

(e) Close the airplane door then record the weight at each load cell (Table 8-10.1).

(f) Carefully lower the airplane to the ground.

(g) Remove the lifting pins.

(3) Calculating Empty Weight Center of Gravity (EWCG)

(a) Enter measured weights and distances into table 8-10.1.

(b) Find the moment of each item using the formula, Moment = Net Weight x Arm.

(c) Add the values in the appropriate columns to get the total CG weight and moment.

(d) Find the EWCG using the formula, EWCG = Total Moment/Total Weight.

Table 8-10.1: Empty Fuel Weight Calculation*

***Approximately 13.4 gallons (6.7 gallons per wing) of fuel is considered unusable. This fuel is part of the basic empty weight.**

EWCG. Calculation			
Epic E1000 S/N _____ N# _____ Date _____			
Max Gross Weight: 8000 lb			
Reference Datum: 107.62 inches forward of the forward face of the firewall.			
Weighing Point	Weight (lbs)	Arm (in)	Moment (in-lbs)
Nose Jack		106.43	
Right Main Jack		192.94	
Left Main Jack		192.94	
Total		----------	
EWCG (total moment/total weight) =			

EWCG % of MAC		
LEMAC (Inches) =	MAC (Inches) =	EWCG % of MAC (%)*
155.35	59.21	
*(EWCG [inches] - LEMAC [inches])/MAC [inches] x 100 = EWCG % of MAC (EWCG - 155.35)/59.21 x 100 = EWCG% of MAC		

C. Weighing the Airplane - Full Fuel

(1) Prepare the airplane.

(a) Service the engine oil if needed, refer to Chapter 12-10.2.B.

(b) Service the brake reservoir if needed, refer to Chapter 12-10.2.C.

(c) Service the hydraulic reservoir if needed, refer to Chapter 12-10.2.D.

(d) Inflate the tires to the recommended operating pressures, refer to Chapter 12-10.2.H.

(e) Move all seats to the most aft position.

(f) Make sure the flaps are in the UP position.

(g) Put all control surfaces in the neutral position.

(h) Verify installed equipment and its location against the equipment list.

(2) Weigh the airplane.

(a) Put the airplane on a level area. The preferred location is in a hangar with the doors closed to eliminate the effect of wind on the airplane and the scales.

(b) Attach a load cell to each hydraulic jack. Ensure the load cells are centered on the load reaction pads on the stands.

(c) Turn on the load cell reader then verify all load cells read 0.

(d) Level the airplane using the jacks, refer to Chapter 8-20.2.A.

Note: Make sure all tires are clear of the ground.

(e) Add fuel as needed until exactly 132 gallons per side is indicated on the MFD.

(f) Close the airplane door then record the weight at each load cell (Table 8-10.2).

(g) Carefully lower the airplane to the ground.

(h) Remove the lifting pins.

(3) Calculate the fuel weight as follows (Table 8-10.2):

(a) Use a pounds-per gallon hydrometer to find the weight of the fuel.

(b) Multiply the fuel weight by 264 to find the total weight of the fuel.

(4) Calculate the Empty Weight Center of Gravity as follows (Table 8-10.2):

(a) Enter measured weights and distances into table 8-10.2.

(b) Find the moment of each item using the formula, Moment = Net Weight x Arm.

(c) Add the values in the appropriate columns to get the total EWCG weight and moment.

(d) Subtract the calculated fuel weight and moment from the totals from the previous step.

(e) Find the EWCG using the formula, EWCG = Total Moment/Total Weight.

Table 8-10.2: Full Fuel Weight Calculation

Fuel Weight*		
Total Fuel from MFD (Gal)	Hydrometer Reading	Total Fuel Weight
264		
***Approximately 13.4 gallons (6.7 gallons per wing) of fuel is considered unusable. This fuel is part of the basic empty weight.**		

EWCG. Calculation			
Epic E1000 S/N _____ N# _____ Date _____			
Max Gross Weight: 8000 lb			
Reference Datum: 107.62 inches forward of the forward face of the firewall.			
Weighing Point	Weight (lbs)	Arm (Inches)	Moment (inch-lbs)
Nose Jack		106.43	
Right Main Jack		192.94	
Left Main Jack		192.94	
Subtotal		----------	
Subtract Fuel Weight	-	180.93	-
Total		----------	
EWCG (inches) =			

EWCG % of MAC		
LEMAC (Inches) =	MAC (Inches) =	EWCG % of MAC*
155.35	59.21	
*(EWCG [inches] - LEMAC [inches])/MAC [inches] x 100 = EWCG % of MAC (EWCG - 155.35)/59.21 x 100 = EWCG% of MAC		

Figure 8-10.1: Weight and Balance Envelope

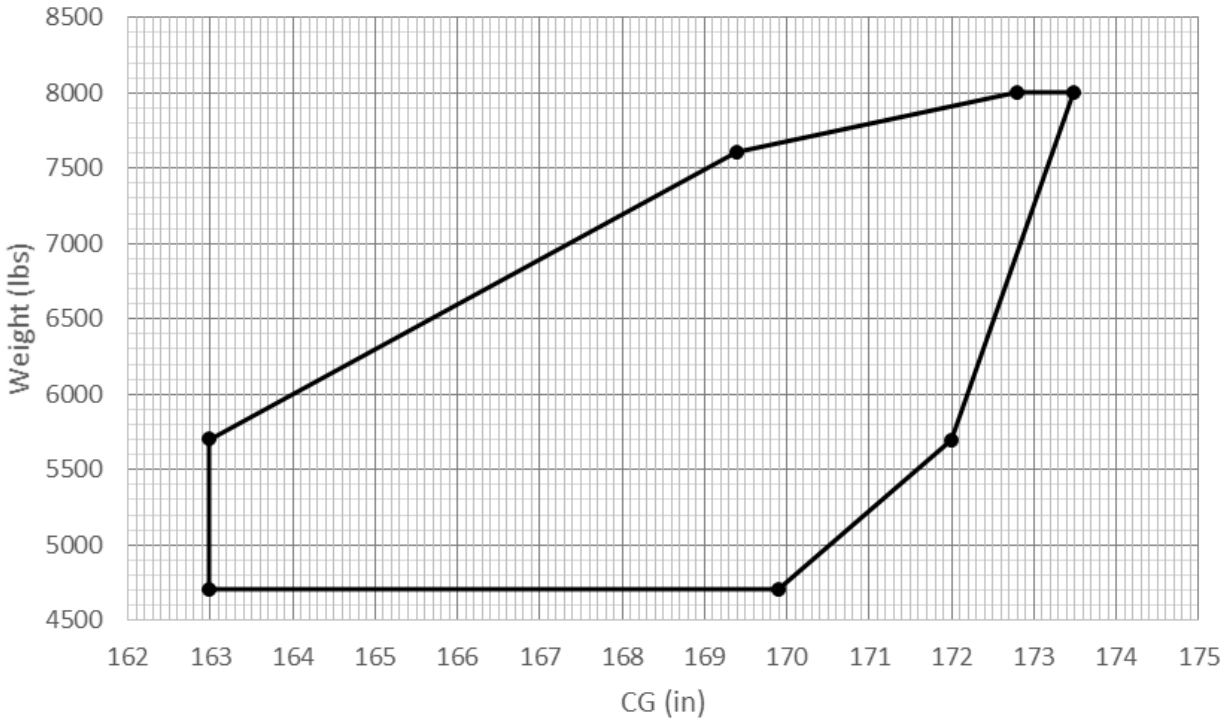

Figure 8-10.2: Basic Arms

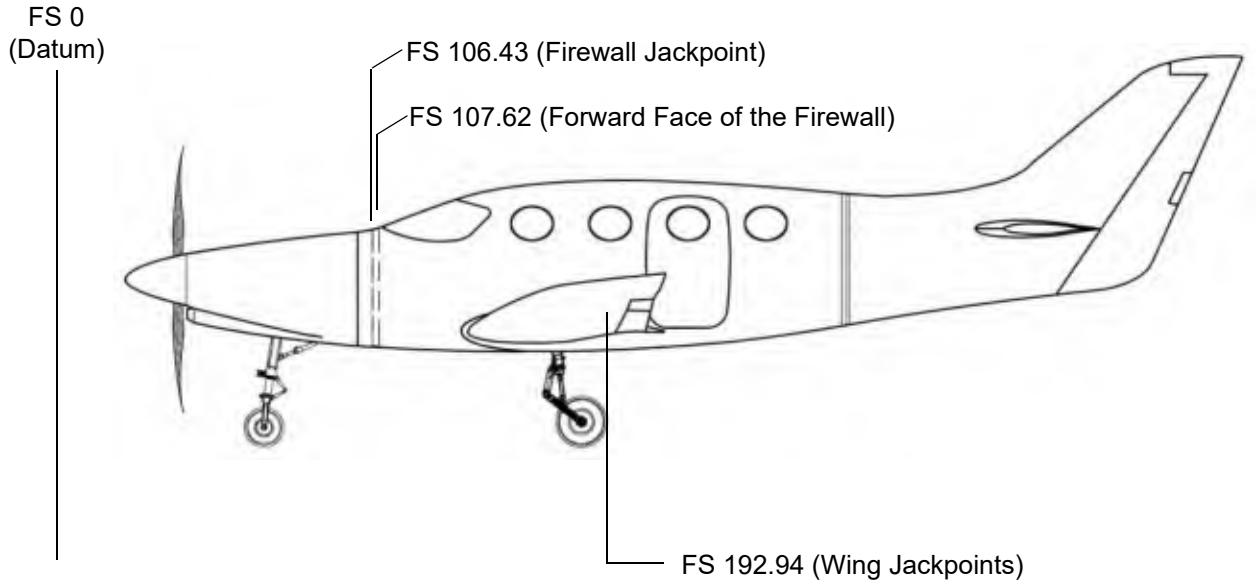

LEVELING

1. Description

This chapter gives information and procedures for leveling the airplane. Any maintenance, repair, or weighing activities that require the airplane to be level require that it be level in both lateral and longitudinal planes of the airplane.

2. Maintenance Practices

A. Leveling

(1) Pitch Attitude

(a) Ensure the SPS CMP 1A, SPS CMP 1B, SPS CMP 2A, SPS CMP 2B, GEAR CONTROL, IGNITER, L PITOT HEAT, L PITOT HT CTRL, L STALL HEAT, R STALL HEAT, R PITOT HEAT, R PITOT HT CTRL and PUSHER circuit breakers are OUT.

(b) Install a lifting pin into each of the jack points.

(c) Raise the airplane using aircraft jacks at each of the jack points.

(d) Remove the carpet runner.

(e) Put a calibrated level between the middle row seats oriented longitudinally in the airplane on the un-upholstered surface.

(f) Adjust the aircraft jacks until the level indicates 0.0° ± 0.1°.

(2) Roll Attitude

(a) Ensure the SPS CMP 1A, SPS CMP 1B, SPS CMP 2A, SPS CMP 2B, GEAR CONTROL, IGNITER, L PITOT HEAT, L PITOT HT CTRL, L STALL HEAT, R STALL HEAT, R PITOT HEAT, R PITOT HT CTRL and PUSHER circuit breakers are OUT.

(b) Install a lifting pin into each of the jack points.

(c) Raise the airplane using aircraft jacks at each of the jack points.

(d) Remove the carpet runner.

(e) Put a calibrated level between the middle row seats oriented laterally in the airplane un-upholstered surface.

(f) Adjust the aircraft jacks until the level indicates 0.0° ± 0.1°.

Figure 8-20.1: Airplane Leveling

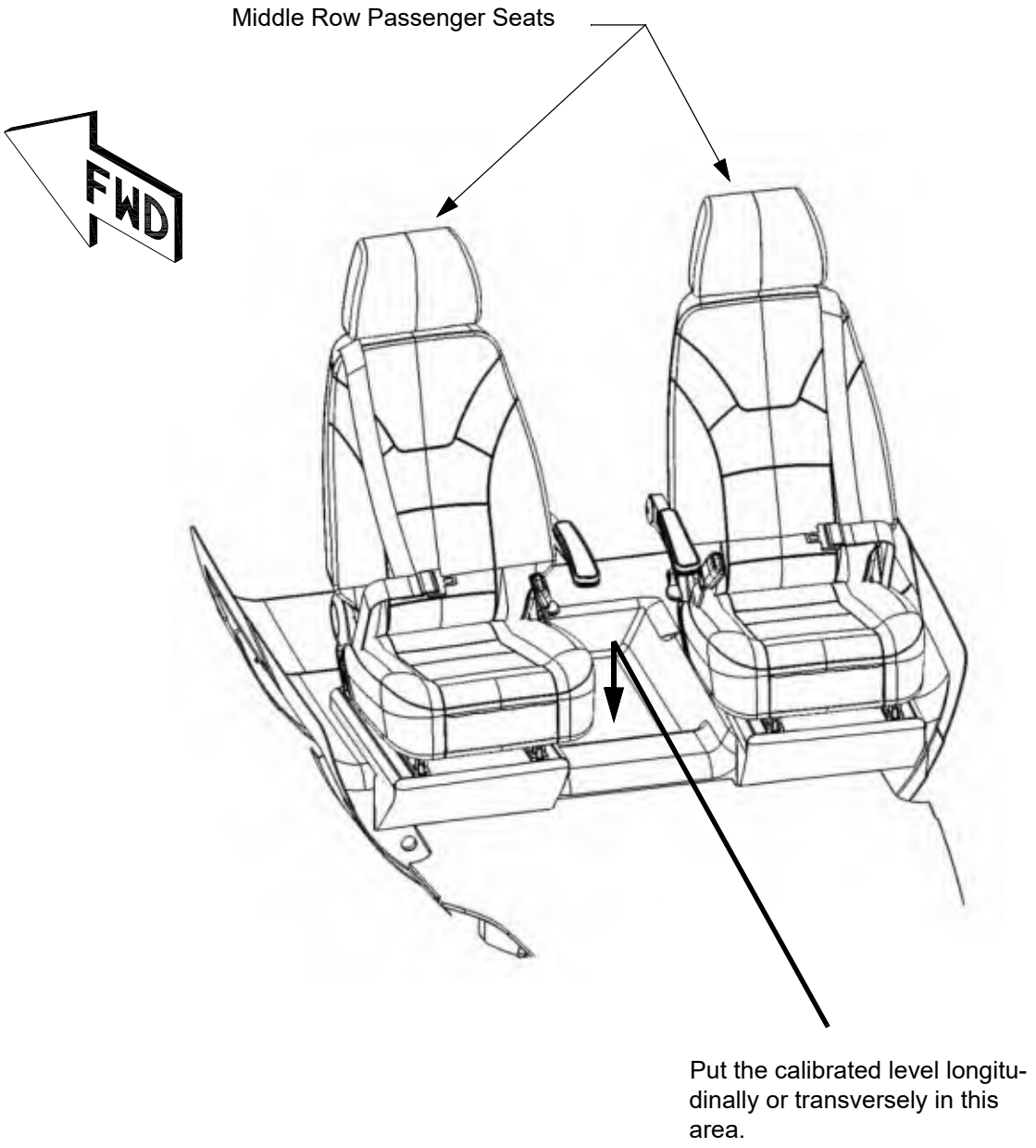

CHAPTER 9

Towing and Taxiing

This Page Intentionally Left Blank

List of Effective Pages

Chapter/Section	Page Number	Effective Date
9-Title	Page 1	02 Jan 2020
9-Title	Page 2	02 Jan 2020
9-LOEP	Page 1	16 May 2022
9-LOEP	Page 2	02 Jan 2020
9-TOC	Page 1	02 Jan 2020
9-TOC	Page 2	02 Jan 2020
9-00	Page 1	13 Apr 2020
9-00	Page 2	02 Jan 2020
9-10	Page 1	02 Jan 2020
9-10	Page 2	02 Jan 2020
9-20	Page 1	16 May 2022
9-20	Page 2	02 Jan 2020

This Page Intentionally Left Blank

Table of Contents

List of Effective Pages ..... 9-LOEP / Page 1
Table of Contents ..... 9-TOC / Page1

Paragraph **Page Number**

Towing and Taxiing

1. General ..... 9-00 / Page 1
2. Tools ..... 9-00 / Page 1

Towing

1. Description ..... 9-10 / Page 1
2. Maintenance Practices ..... 9-10 / Page 1
   A. Airplane Towing ..... 9-10 / Page 1

Taxiing

1. Description ..... 9-20 / Page 1
2. Maintenance Practices ..... 9-20 / Page 1
   A. Taxiing ..... 9-20 / Page 1

This Page Intentionally Left Blank

TOWING AND TAXIING

1. General

The airplane can be towed using a locking tow bar or a front loading tow tug. The nose gear is steerable up to 15° by mechanical connection to the rudder pedals. Rotation of the nose gear beyond 15° causes it to disengage and become free castering. The nose wheel can swivel up to 60° if the pilot uses differential braking to steer.

2. Tools

Table 9-00.1: Special Tools

Item	Part Number	Supplier
Tow Tug	-	Any
Aircraft Chocks	-	Any

This Page Intentionally Left Blank

TOWING

1. Description

Ground handling of the airplane must be done by trained qualified personnel. The use of a front loading tow tug is recommended. When using a tow bar, the tow bar locks into position in the center of the nose gear above the fork. The tow bar must be locked before trying to move the airplane or damage may occur.

2. Maintenance Practices

A. Airplane Towing

(1) Manual Tow Bar

CAUTION: Do not rotate the nose gear more than its turning radius of 60° on either side of center. Rotation more than this limit will result in damage to the nose gear.

(a) Put chocks on the main wheels.
(b) Attach the tow bar to the nose wheel tow bracket.
(c) Remove the wheel chocks.
(d) Move the airplane to the necessary location.

CAUTION: Do not push or pull on the propeller, ailerons, elevator, or rudder when moving the airplane. Pushing on the trailing edge of the flaps by hand when they are in the full up position is permitted for small movements on flat ground.

(e) Remove the tow bar.

(2) Tow Vehicle

CAUTION: Do not rotate the nose gear more than its turning radius of 60° on either side of center. Rotation more than this limit will result in damage to the nose gear.

(a) Put chocks on the main wheels.
(b) Attach the tow vehicle to the nose wheel tow bracket.
(c) Remove the wheel chocks.
(d) Move the airplane to the necessary location.

CAUTION: Do not push or pull on the propeller or the airplane flight control surfaces when moving the airplane.

(e) Disconnect the tow vehicle.

This Page Intentionally Left Blank

TAXIING

1. Description

On ground direction control of the airplane is done using the rudder pedals. Braking and steering are both adjusted using the rudder pedals. Master cylinders on each rudder pedal control the brakes on the left and right main gear. A nose gear steering system is linked to the rudder control system.

2. Maintenance Practices

A. Taxiing

Note: Use only authorized personnel to start the engine, taxi the airplane, or shut down the engine.

CAUTION: Do not rotate the nose gear more than its turning radius of 60° on either side of center. Rotation more than this limit will result in damage to the nose gear.

(1) Start the engine. Refer to the latest revision of the appropriate Epic E1000 Pilot's Operating Handbook and FAA Approved Airplane Flight Manual.
(2) Advance the power lever.
(3) Use the rudder pedals and differential braking to steer the airplane.
(4) Avoid constant use of the brakes. Apply the brakes lightly.
(5) Propeller reverse or Beta mode may be used to slow the airplane.or for backwards taxi.
(6) Taxi the airplane to the necessary location.
(7) Shut down the engine. Refer to the latest revision of the appropriate Epic E1000 Pilot's Operating Handbook and FAA Approved Airplane Flight Manual.
(8) Secure the airplane.

This Page Intentionally Left Blank

CHAPTER
10

Parking, Mooring, Storage, and Return to Service

This Page Intentionally Left Blank

List of Effective Pages

Chapter/Section	Page Number	Effective Date
10-Title	Page 1	02 Jan 2020
10-Title	Page 2	02 Jan 2020
10-LOEP	Page 1	13 Apr 2020
10-LOEP	Page 2	02 Jan 2020
10-TOC	Page 1	02 Jan 2020
10-TOC	Page 2	02 Jan 2020
10-00	Page 1	13 Apr 2020
10-00	Page 2	02 Jan 2020
10-10	Page 1	02 Jan 2020
10-10	Page 2	02 Jan 2020
10-10	Page 3	02 Jan 2020
10-10	Page 4	02 Jan 2020
10-20	Page 1	02 Jan 2020
10-20	Page 2	02 Jan 2020
10-30	Page 1	10 Jul 2025
10-30	Page 2	02 Jan 2020

This Page Intentionally Left Blank

Table of Contents

List of Effective Pages ..... 10-LOEP / Page 1
Table of Contents ..... 10-TOC / Page1

Paragraph **Page Number**

Parking, Mooring, Storage, and Return to Service

1. General ..... 10-00 / Page 1
2. Tools ..... 10-00 / Page 1

Parking

1. Description ..... 10-10 / Page 1
2. Maintenance Practices ..... 10-10 / Page 1
   A. Parking ..... 10-10 / Page 1
   B. Storage ..... 10-10 / Page 2

Mooring

1. Description ..... 10-20 / Page 1
2. Maintenance Practices ..... 10-20 / Page 1
   A. Mooring ..... 10-20 / Page 1

Return to Service

1. Description ..... 10-30 / Page 1
2. Maintenance Practices ..... 10-30 / Page 1
   A. Return to Service ..... 10-30 / Page 1

This Page Intentionally Left Blank

PARKING, MOORING, STORAGE, AND RETURN TO SERVICE

1. General

This chapter gives procedures for parking and mooring the airplane under any of the likely conditions that may be found. This chapter also gives procedures for short and long term storage of the airplane as well as procedures for return to service.

2. Tools

Table 10-00.1: Special Tools

Item	Part Number	Supplier
Tow Tug	-	Any
Aircraft Chocks	-	Any
Tie Down Anchor	FK99000701	Epic Aircraft, LLC
Combo Engine Cover Kit	FK61000010	Epic Aircraft, LLC
Pitot Tube Cover	KPC4-625-6	Sesame Technologies, Inc.
Rope in accordance with FAA Advisory Circular AC 20-35C	-	Any

This Page Intentionally Left Blank

PARKING AND STORAGE

1. Description

This chapter gives procedures for parking and storing the airplane for various lengths of time and under various conditions.

2. Maintenance Practices

A. Parking

(1) Short Term or Mild Weather

(a) Put the airplane on a level surface with the nose into the wind.

(b) Chock the main gear wheels.

(c) Moor the airplane if there are gusty winds or stormy weather.

(2) Long Term or Severe Weather

Wheel bearing corrosion and tire deformation are possible if the airplane is parked for an extended length of time. The airplane should be moved regularly by pushing or towing daily in cold weather and monthly in warm weather.

(a) Put the airplane on a level surface with the nose into the wind.

(b) Ensure the airplane has adequate clearance from all surrounding obstacles, especially items that could move in extreme winds.

(c) Move elevator trim to full nose down if you think there will be severe weather.

(d) Chock the main gear wheels.

(e) Moor the airplane.

(f) Regularly tighten mooring lines if there are severe winds.

B. Storage

The primary concern during storage of the airplane is preservation of the engine and engine related items. The carbon fiber construction of the airframe requires no preservation other than the application of aircraft wax, or equivalent, to the exterior paint if the airplane is not hangared.

(1) Short Term (0 to 7 days)
- (a) Park the airplane.
- (b) Do the engine preservation procedures (refer to the Pratt & Whitney Maintenance Manual, P/N 3036132).

(2) Medium Term (8 to 28 days)
- (a) Park the airplane.
- (b) Do the engine preservation procedures (refer to the Pratt & Whitney Maintenance Manual, P/N 3036132).

(3) Long Term (29 to 90 days)
- (a) Park and moor the airplane. Hangar the airplane if possible.
- (b) Do the engine preservation procedures (refer to the Pratt & Whitney Maintenance Manual, P/N 3036132).
- (c) Completely fill the fuel tanks. Test for water in the fuel tanks once a week.
- (d) Wipe the tires with a clean dry cloth.
- (e) Turn the wheels a minimum of four revolutions every 30 days to prevent bearing corrosion.
- (f) Visually inspect tire air pressure daily, gauge check the air pressure weekly.
- (g) Disarm the ELT.
- (h) Install pitot covers.
- (i) Lubricate the airplane (refer to the lubrication schedule).
- (j) Clean the propeller.
- (k) Clean and cover the instruments and the instrument panel.
- (l) Clean the seats then install protective covers.
- (m) Remove and store all loose equipment.
- (n) Clean the windshield and windows then install protective covers.

(4) Indefinite (Greater than 90 days)
- (a) Park and moor the airplane. Hangar the airplane if possible.
- (b) Do the engine preservation procedures (refer to the Pratt & Whitney Maintenance Manual, P/N 3036132).
- (c) Drain the fuel tanks. Refer to Chapter 12-20 2.A.(2).
- (d) Clean the brake assemblies.
- (e) Wipe the tires with a clean dry cloth.
- (f) Turn the wheels a minimum of four revolutions every 30 days to prevent bearing corrosion.

(g) Gauge check the tires air pressure regularly and inflate the tires as required.

(h) Remove the aircraft batteries then store them. Refer to the latest revision of the Concorde Battery Corporation RG Series Main Aircraft Battery Component Maintenance Manual, P/N 5-0171.

(i) Disarm the ELT.

(j) Install pitot covers.

(k) Lubricate the airplane (refer to the lubrication schedule in Chapter 12-20).

(l) Clean the propeller.

(m) Coat the propeller blades with preservative oil then wrap them with moisture proof sheeting.

(n) Clean and cover the instruments and the instrument panel.

(o) Clean the seats then install protective covers.

(p) Remove and store all loose equipment.

(q) Clean the windshield and windows then install protective covers.

(r) Cover or plug static ports, vents, and inlets.

(s) Apply good quality exterior paint protection such as aircraft wax, or equivalent, to the airplane.

This Page Intentionally Left Blank

MOORING

1. Description

Hangar the airplane in a storm proof, climate controlled hangar with chocks on the main wheels. If this is not possible, moor the airplane using the following procedures. Refer to FAA Advisory Circular AC20-35C, Tie-down Sense, for additional information for preparation for severe weather, tie-down, and related information.

2. Maintenance Practices

A. Mooring

(1) Point the airplane propeller forward into the wind over airport or ramp tie down fixtures.
(2) Install the tie down anchors into the wings and firewall jack points.
(3) Attach mooring ropes snug using a secure anti-slip knot such as a bowline.
(4) Double ropes may be used if you think there will be severe weather.
(5) Chock the main gear wheels.
(6) Install propeller and exhaust cover assemblies.
(7) Install the engine inlet plug.
(8) Install the pitot tube cover.

CAUTION: Give sufficient cooling time after engine shutdown before installing the pitot tube cover, engine inlet cover, and exhaust stack covers!

This Page Intentionally Left Blank

RETURN TO SERVICE

1. Description

The following procedures give return to service guidelines for airplanes coming out of long term storage. The Pilot's Operating Handbook and FAA Approved Airplane Flight Manual for the Epic E1000 gives the necessary preparations and preflight guidelines for airplanes stored under Short Term Storage conditions.

2. Maintenance Practices

A. Return to Service

(1) From Short Term Storage

(a) Refer to the Pilot's Operating Handbook

(2) From Long Term Storage

(a) Return the engine to service (refer to the current revision of the Pratt & Whitney Maintenance Manual, P/N 3036132).

(b) Remove all covers, plugs, tapes, and tags from the airplane.

(c) Test and charge the aircraft batteries (refer to the current revision of the Concorde Battery Corporation RG Series Main Aircraft Battery Component Maintenance Manual, P/N 5-0171) then install or replace the batteries, as applicable.

(d) Test then arm the ELT (refer to the current revision of Kannad Aviation Service Letter, SL S1840501-25-05 and Service Bulletin, S1800000-25-00).

(e) Fill the fuel tanks, if applicable.

(f) Clean and visually inspect the airplane.

(g) Do preflight and engine run-up, refer to the Pilot's Operating Handbook and FAA Approved Airplane Flight Manual for the Epic E1000.

This Page Intentionally Left Blank

CHAPTER
11

Placards and Markings

This Page Intentionally Left Blank

List of Effective Pages

Chapter/Section	Page Number	Effective Date
11-Title	Page 1	02 Jan 2020
11-Title	Page 2	02 Jan 2020
11-LOEP	Page 1	08 Sep 2026
11-LOEP	Page 2	02 Jan 2020
11-TOC	Page 1	02 Jan 2020
11-TOC	Page 2	02 Jan 2020
11-00	Page 1	13 Apr 2020
11-00	Page 2	02 Jan 2020
11-20	Page 1	02 Jan 2020
11-20	Page 2	13 Apr 2020
11-20	Page 3	02 Jan 2020
11-20	Page 4	13 Apr 2020
11-30	Page 1	02 Jan 2020
11-30	Page 2	02 Jan 2020
11-30	Page 3	02 Jan 2020
11-30	Page 4	08 Sep 2026
11-30	Page 5	08 Sep 2026
11-30	Page 6	02 Jan 2020
11-30	Page 7	02 Jan 2020
11-30	Page 8	02 Jan 2020
11-30	Page 9	02 Jan 2020
11-30	Page 10	02 Jan 2020
11-30	Page 11	02 Jan 2020
11-30	Page 12	02 Jan 2020
11-30	Page 13	02 Jan 2020
11-30	Page 14	02 Jan 2020
11-30	Page 15	02 Jan 2020
11-30	Page 16	02 Jan 2020
11-30	Page 17	08 Sep 2026
11-30	Page 18	02 Jan 2020
11-30	Page 19	02 Jan 2020
11-30	Page 20	02 Jan 2020

This Page Intentionally Left Blank

Table of Contents

List of Effective Pages ..... 11-LOEP / Page 1
Table of Contents ..... 11-TOC / Page1

Paragraph **Page Number**

Placards and Markings
1. General ..... 11-00 / Page 1

Exterior Placards and Markings
1. Description ..... 11-20 / Page 1
2. Maintenance Practices ..... 11-20 / Page 1
   A. Pressure Adhesive Placard ..... 11-20 / Page 1
   B. Painted Placards ..... 11-20 / Page 1
   C. Placards and Locations ..... 11-20 / Page 2

Interior Placards and Markings
1. Description ..... 11-30 / Page 1
2. Maintenance Practices ..... 11-30 / Page 1
   A. Water Slide Transfer Decal Placard ..... 11-30 / Page 1
   B. Pressure Adhesive Placard ..... 11-30 / Page 2
   C. Engraved Placard ..... 11-30 / Page 3
   D. Backlighted Placard ..... 11-30 / Page 3
   E. Placards and Locations ..... 11-30 / Page 4

This Page Intentionally Left Blank

PLACARDS AND MARKINGS

1. General

Placards on the exterior and the interior of the airplane give vital information for identification and indication. Placards give operating instructions, servicing instructions, emergency instructions, airplane and component identification, and any other data that may be immediately helpful for normal operation, maintenance, and emergencies.

Each placard is made and installed on the airplane using one of four processes depending on the application. The four processes are water slide transfer decals, pressure adhesive stickers, engraving, or painted.

This Page Intentionally Left Blank

EXTERIOR PLACARDS AND MARKINGS

1. Description

This section gives the removal, installation, and maintenance procedures for the exterior placards on this airplane.

2. Maintenance Practices

A. Pressure Adhesive Placard

(1) Removal

(a) Make reference marks around the placard to be removed to help in positioning the new placard.

(b) Remove the existing placard by raising one corner then slowly peeling it back. Pull slowly and steadily keeping the peeled portion of the placard parallel to the surface.

(c) Remove residual adhesive from the airplane surface using isopropyl alcohol.

(2) Installation

Note: Apply the placard when the ambient temperature and the temperature of the airplane surface are 70°F to 80°F (20°C to 26°C).

(a) Use water and a mild detergent to clean the surface of the airplane where the placard is to be installed. Put the airplane on a flat surface with the nose into the wind if possible.

(b) Wipe the cleaned area using isopropyl alcohol. Let the alcohol completely evaporate.

(c) Remove the backing from the placard. Do not contaminate the adhesive surface of the placard with dust, dirt, or fingerprints**.**

(d) Attach one end of the placard to the airplane then slowly roll it on avoiding air bubbles.

(e) If the placard has a protective covering remove it.

(3) Maintenance

(a) Wash the placard using mild soap and water.

Note: Do not use petroleum based, caustic, or abrasive cleaning materials.

(b) If aviation fuel touches a placard immediately rinse with water.

(c) Never apply paint to or paint over a placard.

B. Painted Placards

These placards are painted onto the exterior of the airplane using a stencil. If this type of placard becomes damaged contact Epic Aircraft, LLC.

C. Placards and Locations

Figure 11-20.1: Exterior Placards (Sheet 1 of 3)

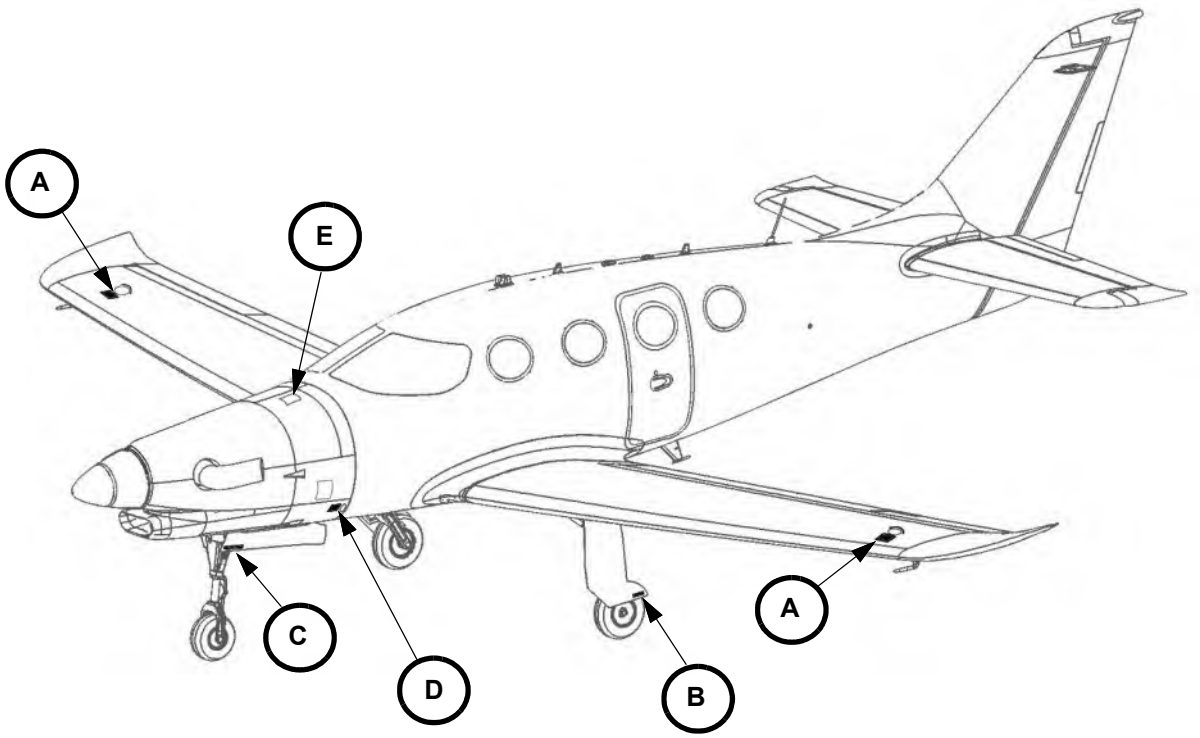

Figure 11-20.1: Exterior Placards (Sheet 2 of 3)



A

MAIN 103-108 PSI

On Each Main Gear Door

B

NOSE 65-70 PSI

On Each Nose Gear Door

C

28 VOLT DC POWER

D

Figure 11-20.1: Exterior Placards (Sheet 3 of 3)



Inside the Oil Door

E

INTERIOR PLACARDS AND MARKINGS

1. Description

This section gives the removal, installation, and maintenance procedures for the interior placards on this airplane.

2. Maintenance Practices

A. Water Slide Transfer Decal Placard

(1) Removal

(a) Mask off the area around the placard using masking tape.

(b) Remove the clear coat paint over the placard using 220 grit sandpaper.

(c) Carefully continue sanding until the placard is removed. Take care not to damage the paint under the placard.

(2) Installation

(a) Clean the surface where the water slide transfer decal is to be applied using denatured alcohol. Let the alcohol completely evaporate.

(b) Remove the top protective sheet from the transfer decal.

(c) Soak the transfer decal in room temperature water for 10 to 15 seconds.

(d) Holding the release paper above the placard location, slide the transfer decal off the paper and into position.

Note: A clear film holds the graphics of the placard for positioning.

(e) Using the clear film as an aid and index guide, position the placard.

(f) Press out air bubbles and excess water using a small rubber squeegee.

(g) Clean any remaining glue from the surface of the transfer using a cloth wet with water.

(h) Use a dry cloth to absorb any remaining moisture.

(i) Let the decal dry at 70°F to 110°F (20°C to 38°C) for a minimum of 8 hours.

Note: The clear film must remain on the decal during drying.

(j) Remove the clear film immediately before application of clear coat (Dupont/ Axalta Imron AF740).

(k) Inspect the perimeter of the decal where the clear film was. Clean any remaining glue from the surface using a cloth wet with water.

(l) Apply the clear coat by spray (refer to the clear coat manufacturer's instructions).

(m) Let the clear coat cure (refer to the clear coat manufacturer's instructions).

(n) Remove the masking tape.

(3) Maintenance

(a) Wash the placard using mild soap and water.

Note: Do not use petroleum based, caustic, or abrasive cleaning materials.

(b) If aviation fuel touches a placard immediately rinse with water.

(c) Never apply paint to or paint over a placard.

B. Pressure Adhesive Placard

(1) Removal

(a) Make reference marks around the placard to be removed to help in positioning the new placard.

(b) Remove the existing placard by raising one corner then slowly peeling it back. Pull slowly and steadily keeping the peeled portion of the placard parallel to the surface.

(c) Remove residual adhesive from the airplane surface using denatured alcohol.

(2) Installation

(a) Apply the placard when the ambient temperature and the temperature of the airplane surface are 70°F to 80°F (20°C to 26°C).

(b) Use water and a mild detergent to clean the surface of the airplane where the placard is to be installed. Put the airplane on a flat surface with the nose into the wind if possible.

(c) Wipe the cleaned area using denatured alcohol. Let the alcohol completely evaporate.

(d) Remove the backing from the placard. Do not contaminate the adhesive surface of the placard with dust, dirt, or fingerprints**.**

(e) Attach one end of the placard to the airplane then slowly roll it on avoiding air bubbles.

(f) If the placard has a protective covering remove it.

(3) Maintenance

(a) Wash the placard using mild soap and water.

Note: Do not use petroleum based, caustic, or abrasive cleaning materials.

(b) If aviation fuel touches a placard immediately rinse with water.

(c) Never apply paint to or paint over a placard.

C. Engraved Placard

These placards are engraved into a component of the airplane such as the MAN OVRD lever on the throttle quadrant. If this type of placard becomes damaged, repair is by replacement of the engraved airplane component.

D. Backlighted Placard

These placards are part of the dimmer panel and the fuel selector knob backing plate. If these placards become damaged, repair is by replacement of the dimmer panel or the fuel selector knob backing plate, as applicable.

E. Placards and Locations

Figure 11-30.1: Interior Placards (Sheet 1 of 16)

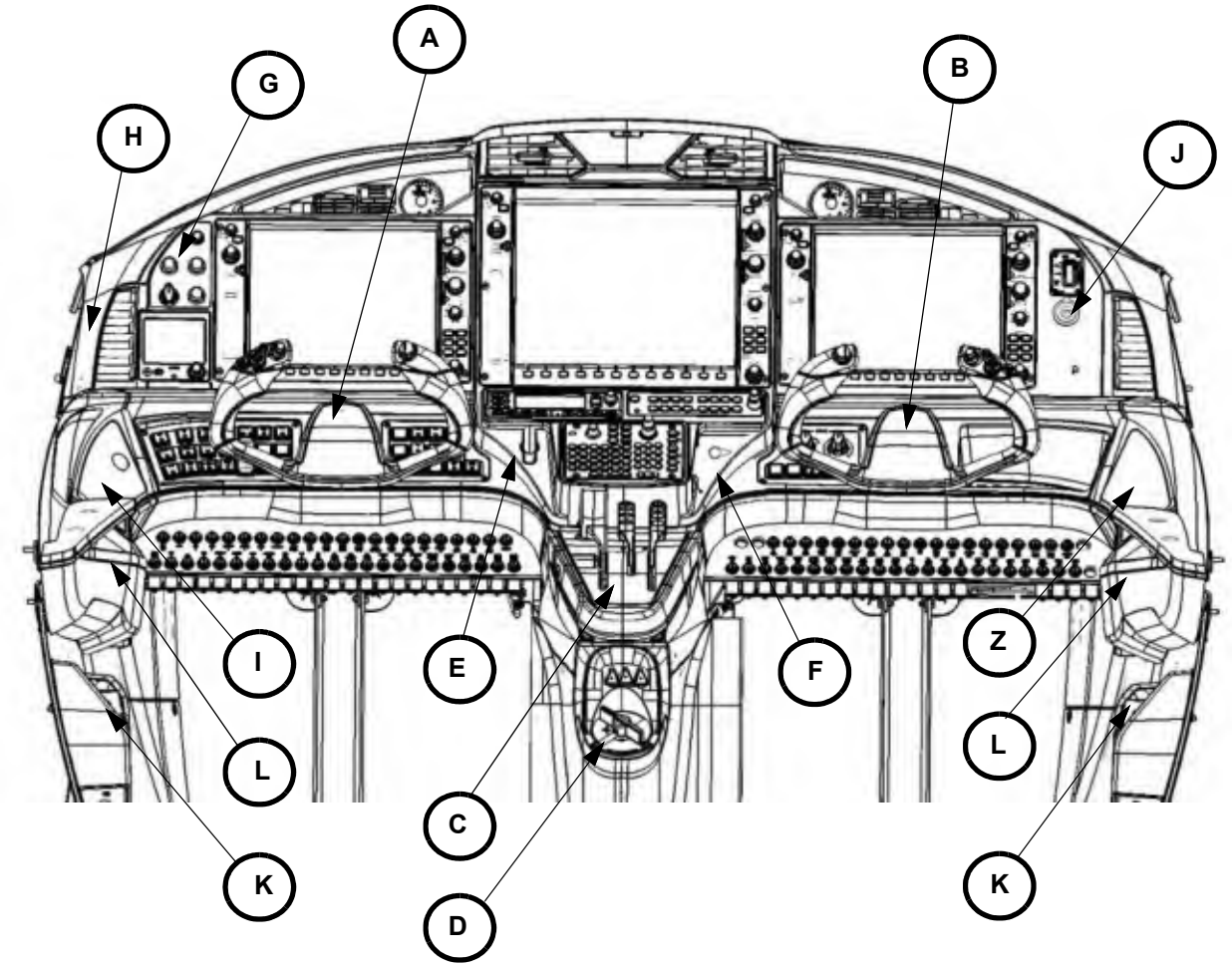

Figure 11-30.1: Interior Placards (Sheet 2 of 16)

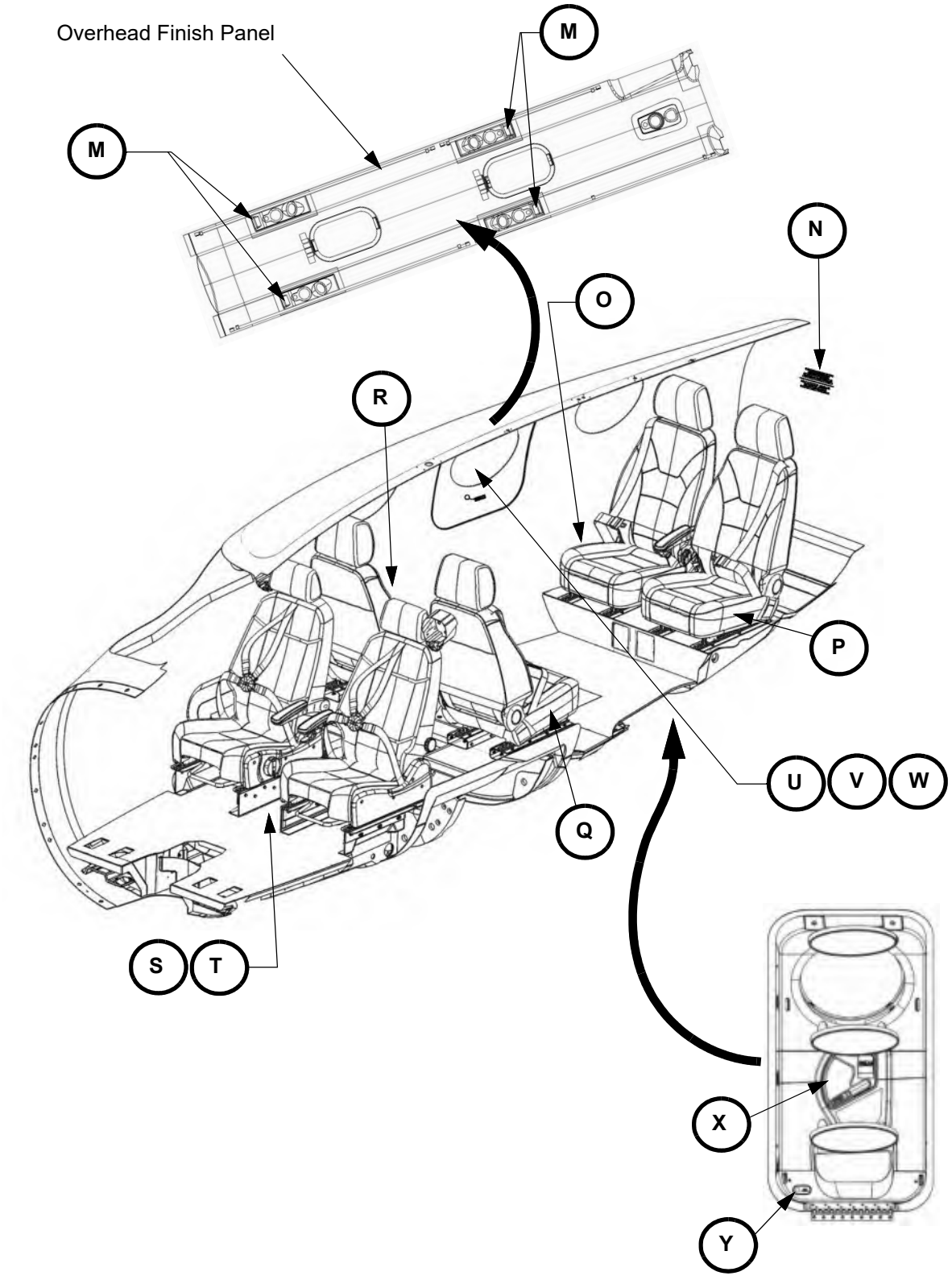

Figure 11-30.1: Interior Placards (Sheet 3 of 16)

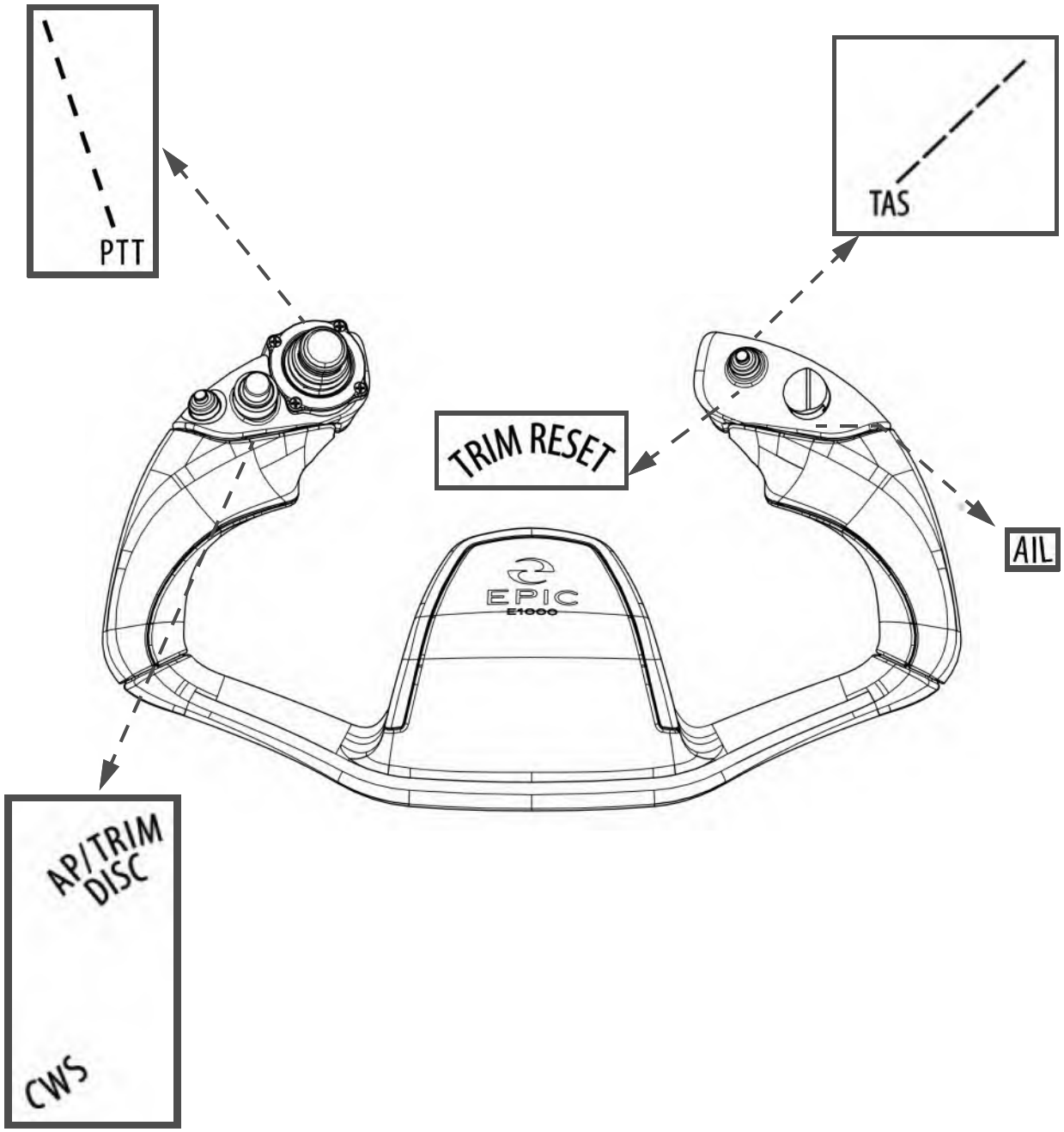

PILOT YOKE

A

Figure 11-30.1: Interior Placards (Sheet 4 of 16)

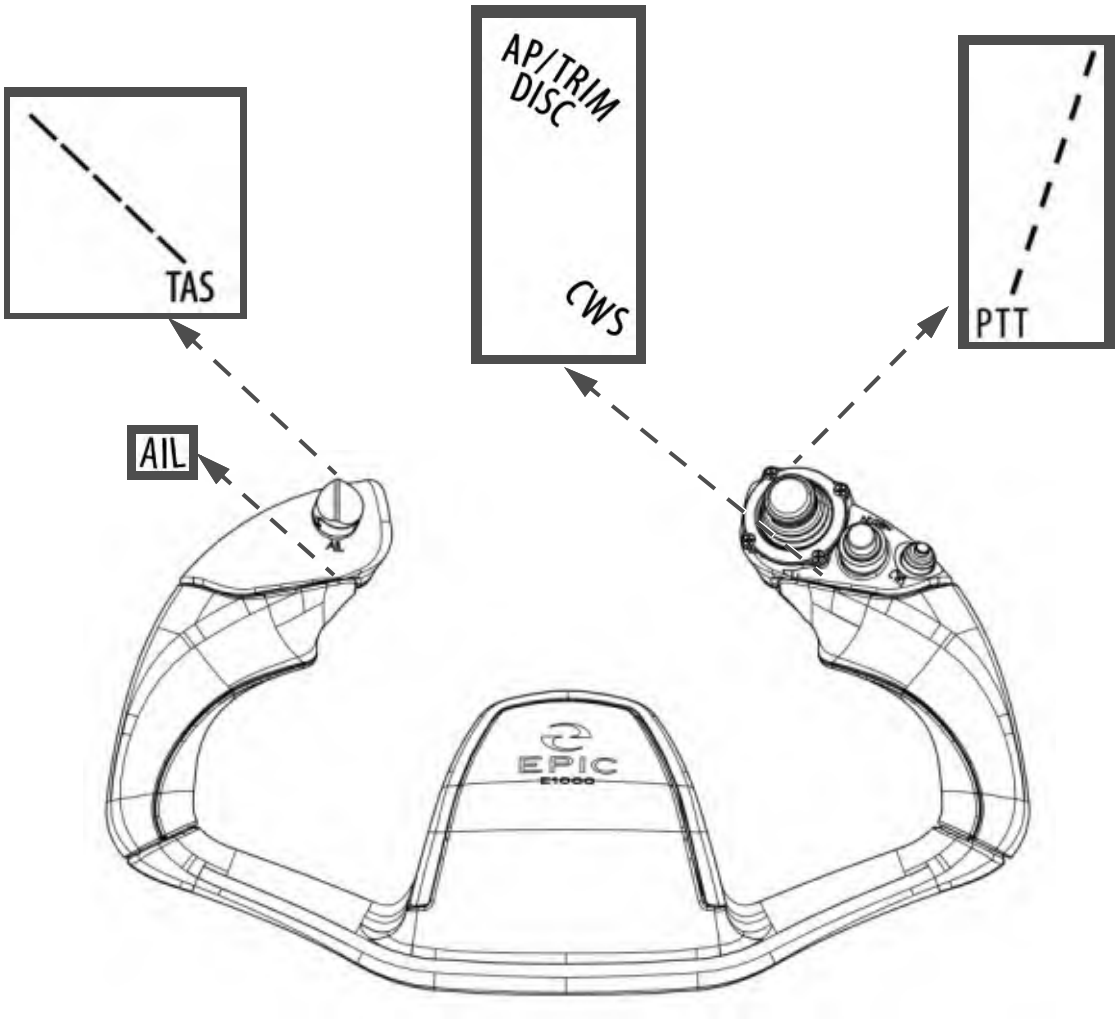

COPILOT YOKE

B

Figure 11-30.1: Interior Placards (Sheet 5 of 16)

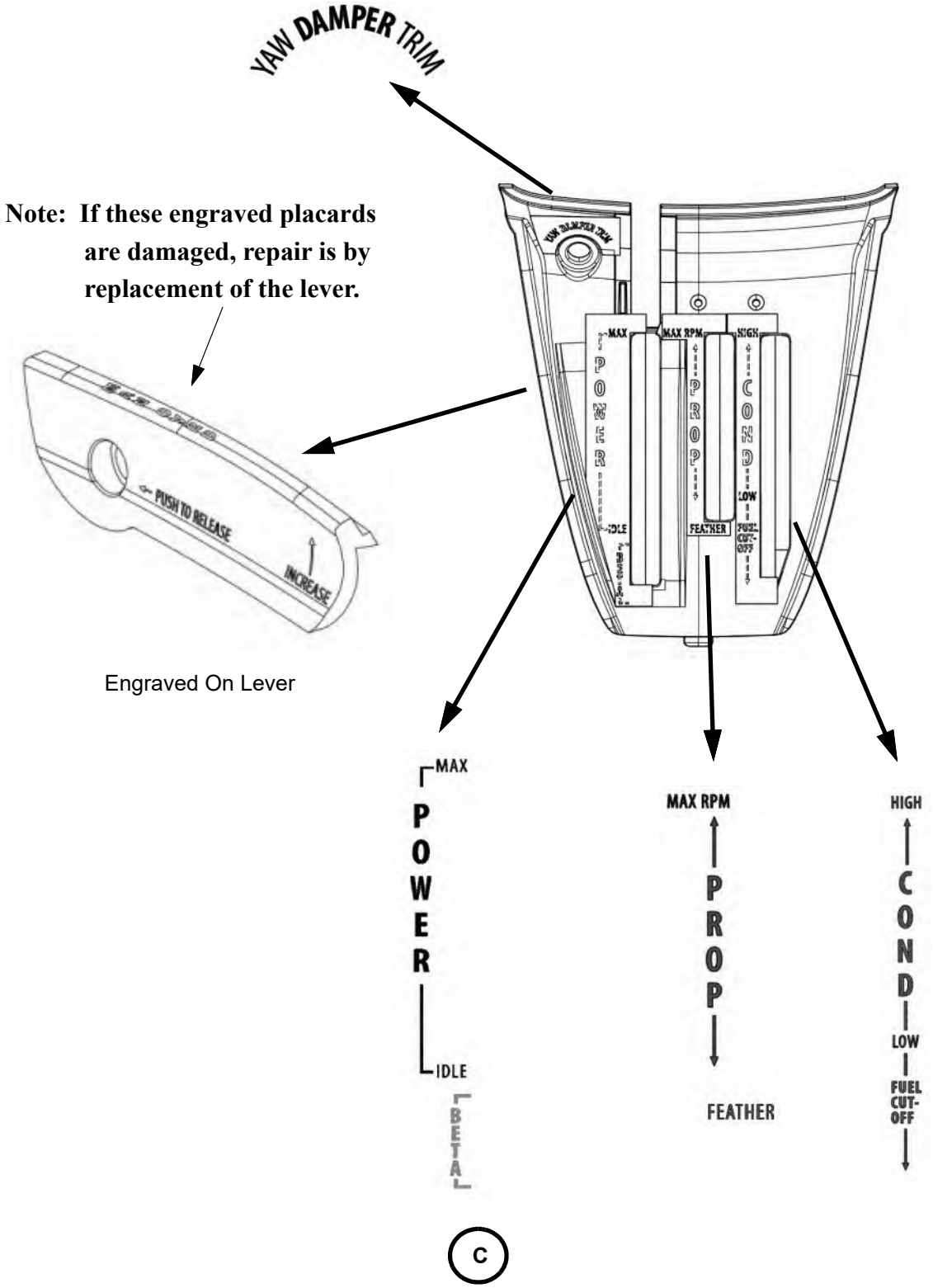

Figure 11-30.1: Interior Placards (Sheet 6 of 16)

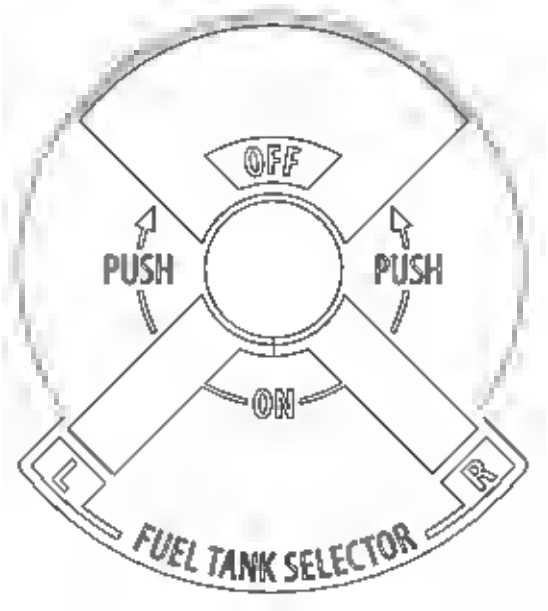

D

Note: If these backlit placards are damaged, repair is by replacement of the fuel selector knob backing plate.

Figure 11-30.1: Interior Placards (Sheet 7 of 16)



E

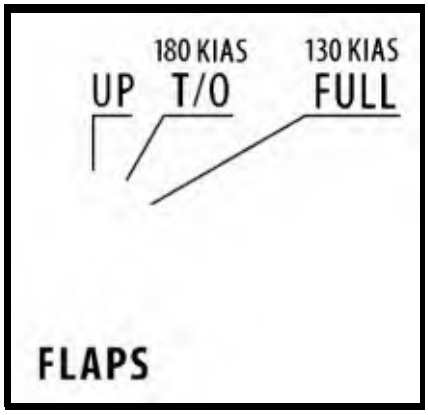

F

Figure 11-30.1: Interior Placards (Sheet 8 of 16)

Note: If these backlit placards are damaged, repair is by replacement of the Dimmer Panel.

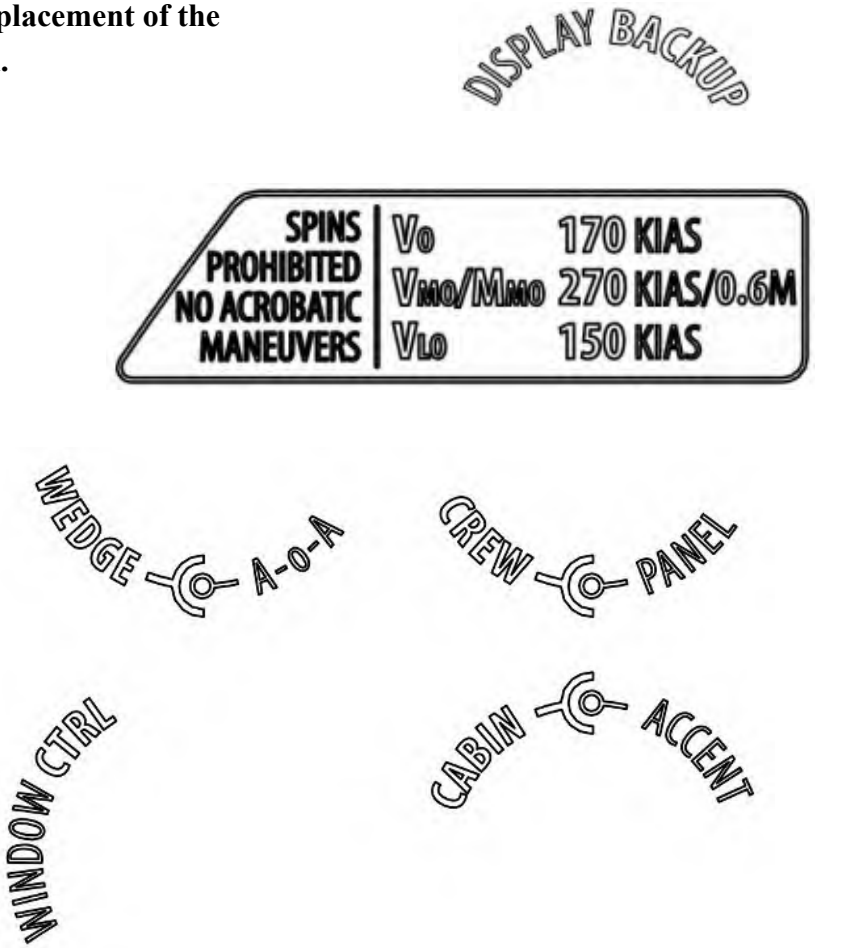

G

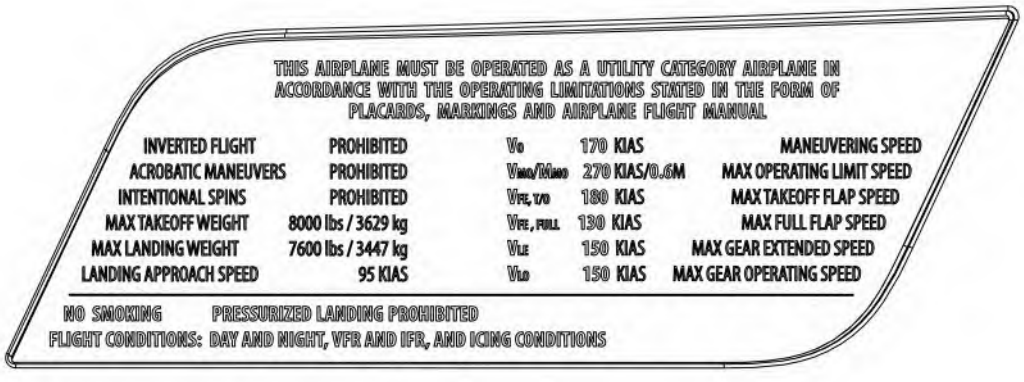

H

Figure 11-30.1: Interior Placards (Sheet 9 of 16)

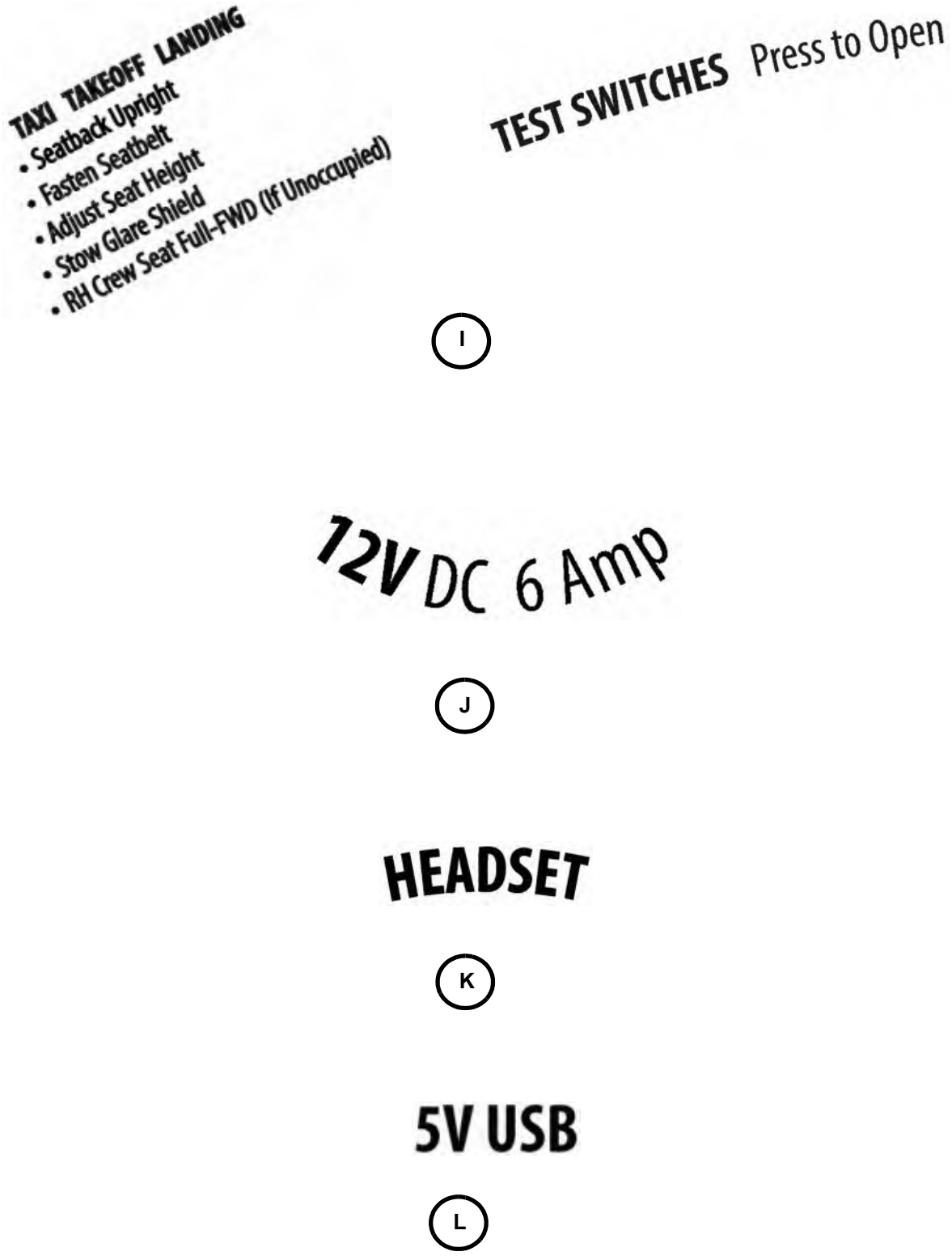

Figure 11-30.1: Interior Placards (Sheet 10 of 16)



M

EMERGENCY LOCATOR TRANSMITTER
LOCATED AFT OF THIS POINT
IT MUST BE MAINTAINED IN ACCORDANCE
WITH THE FEDERAL AVIATION REGULATIONS

TOTAL BAGGAGE WEIGHT 200 LBS. MAX.
SEE WEIGHT AND BALANCE DATA
FOR ADDITIONAL LOADING INSTRUCTIONS

N

Figure 11-30.1: Interior Placards (Sheet 11 of 16)

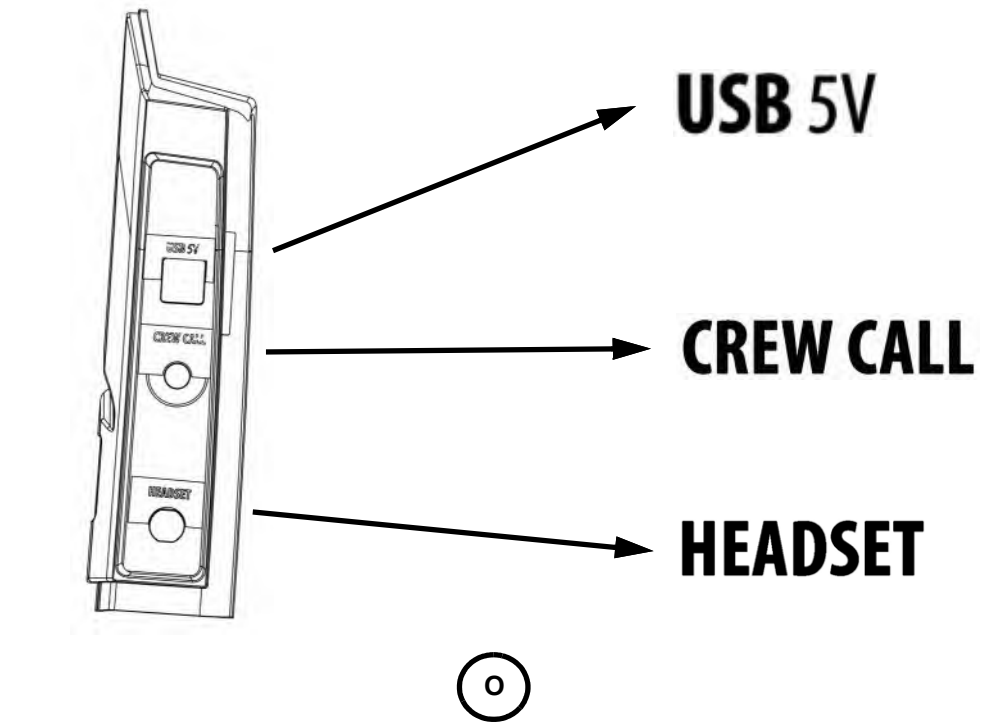

O

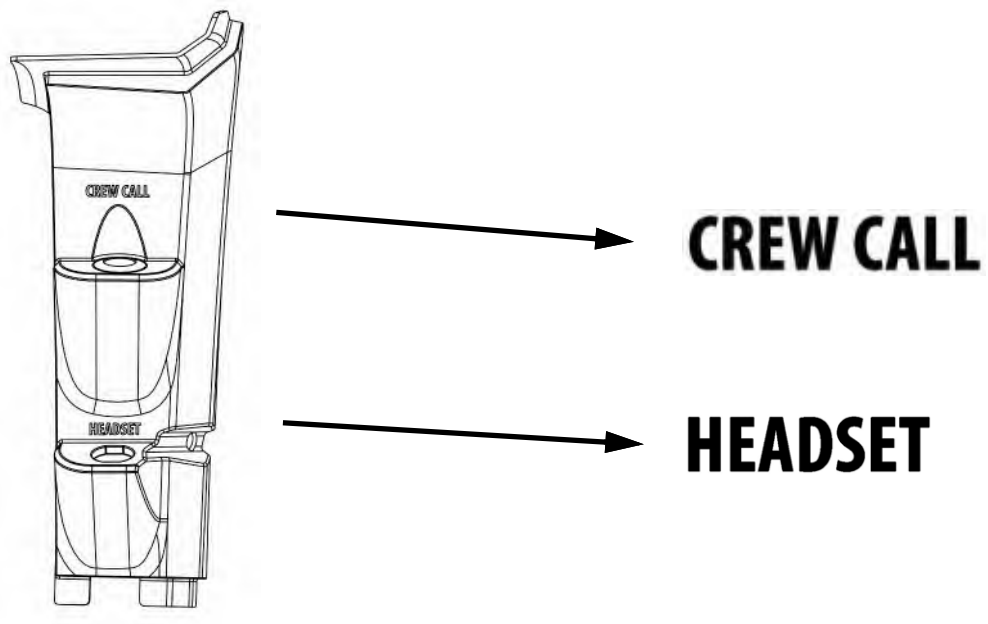

P

Figure 11-30.1: Interior Placards (Sheet 12 of 16)

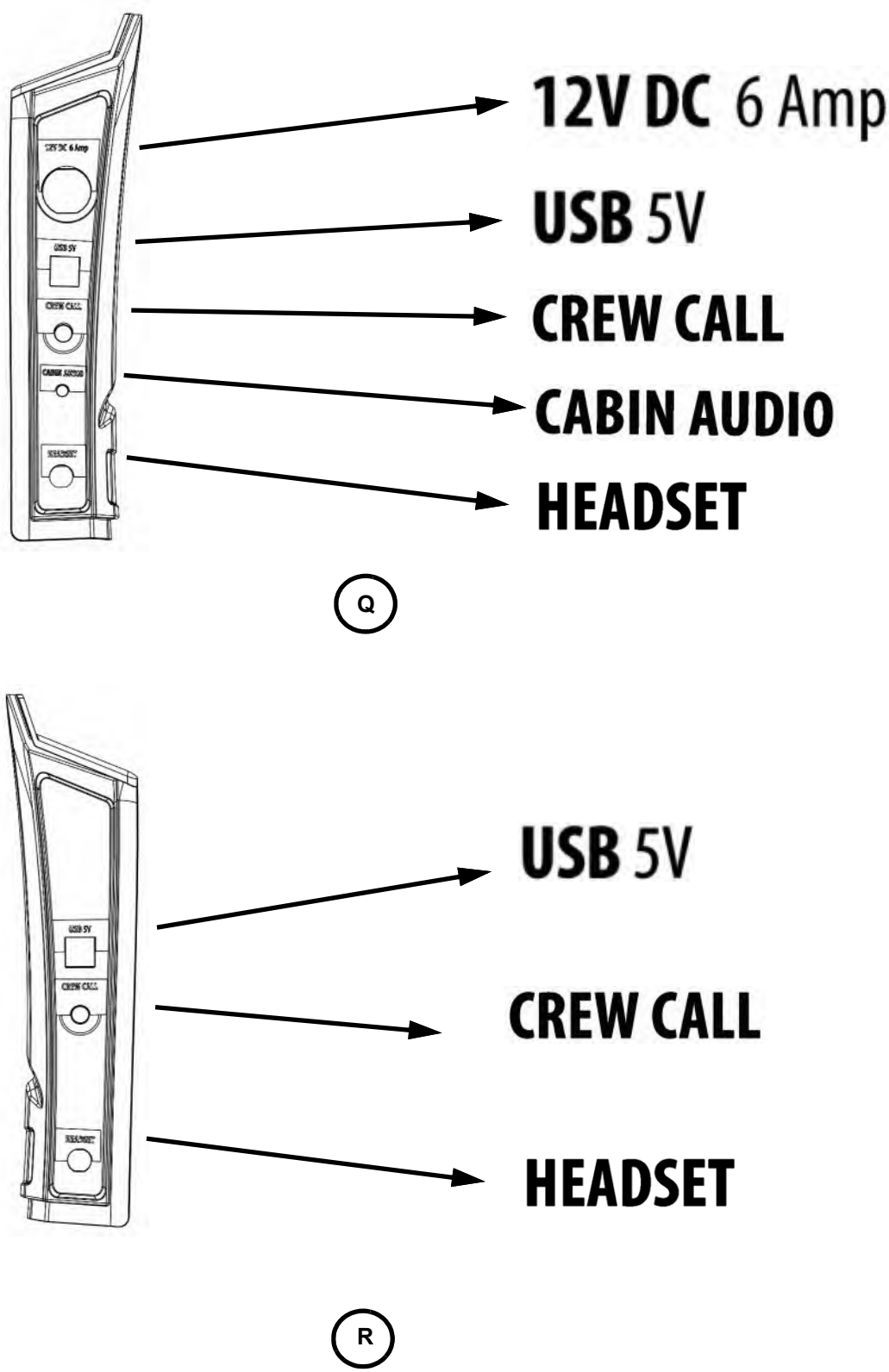

Figure 11-30.1: Interior Placards (Sheet 13 of 16)



S



T

Figure 11-30.1: Interior Placards (Sheet 14 of 16)



U



V



W

Figure 11-30.1: Interior Placards (Sheet 15 of 16)

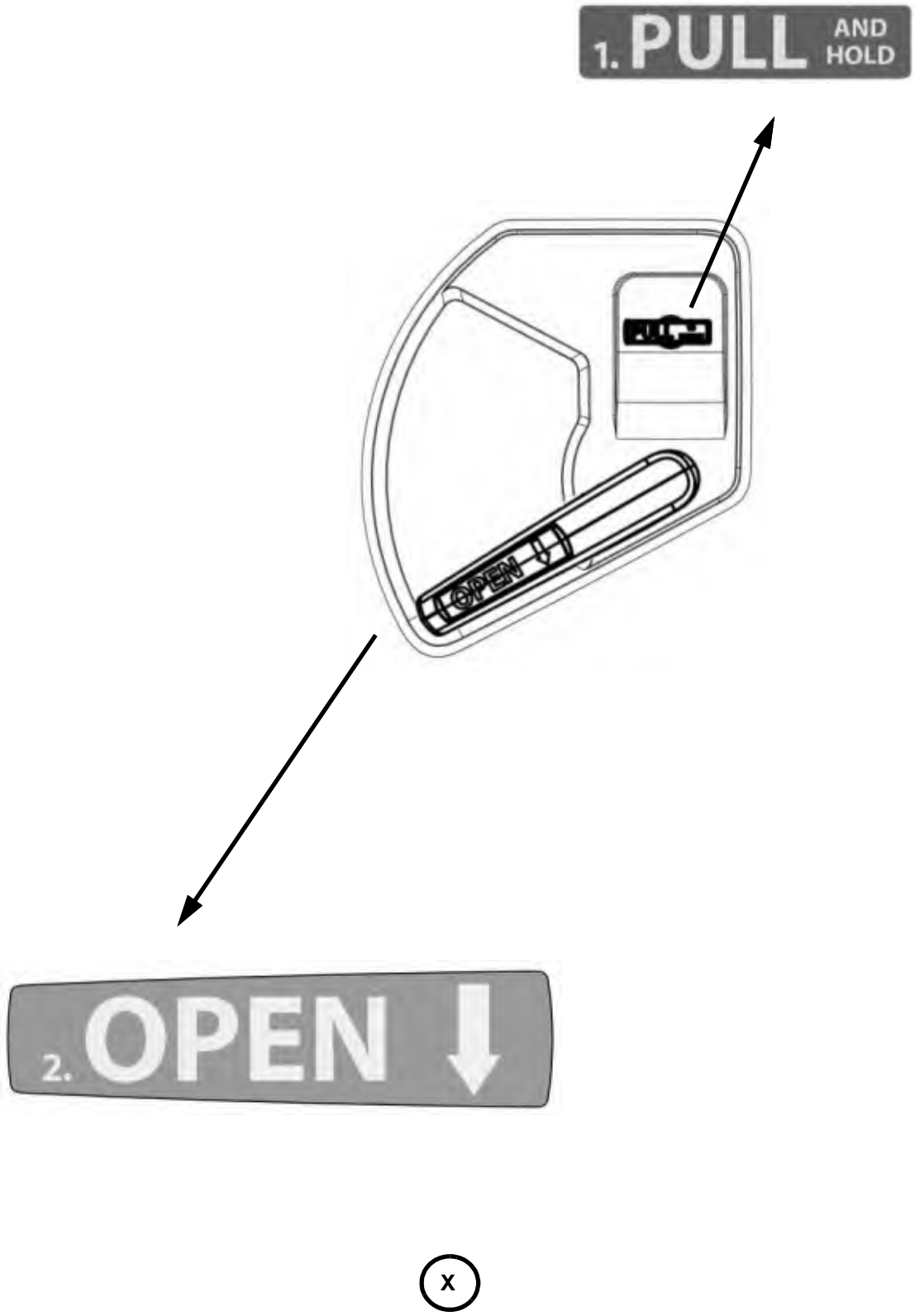

Figure 11-30.1: Interior Placards (Sheet 16 of 16)



This Page Intentionally Left Blank

CHAPTER 12

Servicing

This Page Intentionally Left Blank

List of Effective Pages

Chapter/Section	Page Number	Effective Date
12-Title	Page 1	02 Jan 2020
12-Title	Page 2	02 Jan 2020
12-LOEP	Page 1	08 Sep 2026
12-LOEP	Page 2	02 Jan 2020
12-TOC	Page 1	08 Sep 2026
12-TOC	Page 2	02 Jan 2020
12-00	Page 1	13 Apr 2020
12-00	Page 2	13 Apr 2020
12-10	Page 1	02 Jan 2020
12-10	Page 2	10 Jul 2025
12-10	Page 3	10 Jul 2025
12-10	Page 4	10 Jul 2025
12-10	Page 5	10 Jul 2025
12-10	Page 6	10 Jul 2025
12-10	Page 7	10 Jul 2025
12-10	Page 8	10 Jul 2025
12-10	Page 9	10 Jul 2025
12-10	Page 10	10 Jul 2025
12-10	Page 11	10 Jul 2025
12-10	Page 12	08 Sep 2026
12-10	Page 13	08 Sep 2026
12-10	Page 14	10 Jul 2025
12-20	Page 1	02 Jan 2020
12-20	Page 2	08 Sep 2026
12-20	Page 3	02 Jan 2020
12-20	Page 4	08 Sep 2026
12-20	Page 5	08 Sep 2026
12-20	Page 6	08 Sep 2026
12-20	Page 7	16 May 2022
12-20	Page 8	10 Jul 2025
12-20	Page 9	10 Jul 2025
12-20	Page 10	10 Jul 2025
12-20	Page 11	10 Jul 2025
12-20	Page 12	10 Jul 2025
12-30	Page 1	02 Jan 2020
12-30	Page 2	02 Jan 2020

This Page Intentionally Left Blank

Table of Contents

List of Effective Pages ..... 12-LOEP / Page 1
Table of Contents ..... 12-TOC / Page1

Paragraph **Page Number**

Servicing

1. General ..... 12-00 / Page 1
2. Tools ..... 12-00 / Page 1

Replenishing

1. Description ..... 12-10 / Page 1
2. Maintenance Practices ..... 12-10 / Page 1
   - A. Fuel System ..... 12-10 / Page 1
   - B. Oil System ..... 12-10 / Page 3
   - C. Brake System ..... 12-10 / Page 3
   - D. Hydraulic System ..... 12-10 / Page 4
   - E. Main Landing Gear Damper ..... 12-10 / Page 9
   - F. Nose Landing Gear Strut ..... 12-10 / Page 9
   - G. Emergency Landing Gear Extension Bottle ..... 12-10 / Page 10
   - H. Tires ..... 12-10 / Page 11
   - I. Oxygen System ..... 12-10 / Page 12

Scheduled Servicing

1. Description ..... 12-20 / Page 1
2. Maintenance Practices ..... 12-20 / Page 1
   - A. Fuel System ..... 12-20 / Page 1
   - B. Oil System ..... 12-20 / Page 2
   - C. Brake System ..... 12-20 / Page 4
   - D. Hydraulic System ..... 12-20 / Page 4
   - E. Lubrication ..... 12-20 / Page 5
   - F. Cleaning ..... 12-20 / Page 10

Unscheduled Servicing

1. Description ..... 12-30 / Page 1
2. Maintenance Practices ..... 12-30 / Page 1
   - A. Ice and Snow Removal ..... 12-30 / Page 1

This Page Intentionally Left Blank

SERVICING

1. General

This chapter provides servicing instructions adequate to meet average requirements under normal operating conditions at recommended and required servicing intervals specified in Chapter 5.

Shortening of the service intervals specified in Chapter 5 should be considered if the airplane is used under prolonged abnormal operating conditions. Abnormal conditions include, but are not limited to, salt water environments, high humidity and moisture areas, high dust areas, extreme temperature ranges, and unimproved runways.

CAUTION: Performance and operation of the airplane can be seriously impaired if unapproved or contaminated fuel, oil, fluids, lubricants, or materials are used. Do not mix various brands, types, and weights of materials. Use of substitutes or other lubricants than those specified in this chapter may cause malfunction when operating in extreme temperature conditions, or may cause excessive wear due to incorrect lubrication.

2. Tools

Table 12-00.1: Special Tools

Item	Part Number	Supplier
Grounding Cable	-	Any
Fire Extinguisher (Type AB, or ABC)	-	Any
Fuel Drain Hose	-	Any
Fuel Drain Container	-	Any
Rubber Protective Mat	-	Any
Mild Non-Detergent Dishwashing Soap	-	Any
Whisk Broom	-	Any
Vacuum Cleaner	-	Any
Automotive Wax, Silicone Free	-	Any
Cotton Cloth	-	Any

Item	Part Number	Supplier
Acrylic Polish	-	Any
Acrylic Cleaner	-	Any
Kerosene	-	Any

REPLENISHING

1. Description

This section specifies the replenishing of all fluids and gases used on the airplane.

2. Maintenance Practices

A. Fuel System

(1) Safety Precautions

(a) A fire extinguisher must be available and accessible.

(b) Electrically ground the airplane nose gear tow bar hitch and the fuel service equipment before fueling and defueling the airplane.

(c) Ensure fuel tank vents are clear.

(d) Ensure aircraft fueling operations are over 100 feet (30.48 meters) away from energized electrical equipment capable of producing sparks.

(e) No open flames within 100 feet (30.48 meters) of the airplane or fueling vehicle.

(f) No smoking 100 feet (30.48 meters) of the airplane or fueling vehicle.

(g) Do not operate electrical equipment or electrical switches during fueling or defueling of the airplane.

(h) Frequently inspect the fuel for ice formation during cold weather operation.

(i) Sample the fuel for any moisture or contaminates after each refueling and before the first flight of the day. Wait at least five minutes for any moisture and sediment to settle before flushing fuel drain valves.

(2) Approved Fuels and Capacities

(a) Approved Fuels and Additives

- ASTM-D1655 JET A,
- MIL-DTL-83133 Grade JP-8
- Any fuel which complies with the latest revision of Pratt & Whitney Service Bulletin No. 14004.

CAUTION: The fuel used must contain an anti-ice additive, in accordance with specification Mil-I-27686 or Mil-I-85470. Additive concentrations (Egme or DiEgme) shall be comprised between a minimum of 0.06% and a maximum of 0.15% by volume.

CAUTION: The use of aviation gasoline (Avgas) must be restricted to emergency purposes only. Avgas shall not be used for more than 150 cumulative hours during any period between engine overhaul periods.

Note: Use of AVGAS must be recorded in the engine logbook.

(b) Fuel Capacities:

Table 12-10.1:

	Total Fuel Capacity			Usable Fuel Capacity		
	U. S. Gal.	Imp. Gal.	Liter	U. S. Gal.	Imp. Gal.	Liter
Left Wing	139	115.7	526.2	132	109.9	499.7
Right Wing	139	115.7	526.2	132	109.9	499.7
Total	278	231.4	1052.4	264	219.8	999.4

(3) Refueling

(a) Put the airplane on level ground in a well ventilated location outside of the hangar.

(b) Ensure the airplane remains stationary using wheel chocks on the main wheels.

(c) Put a fire extinguisher near the wing to be serviced.

(d) Electrically ground the airplane by connecting a grounding cable from the fuel service nozzle to the nose gear tow bar hitch.

(e) Put a rubber protective mat on the wing and around the fuel tank filler port.

CAUTION: Do not let the fuel nozzle and hose rest unsupported on the wing to prevent damage to the inlet flange and/or wing structure. Do not let the fuel nozzle come in contact with the bottom of the wing.

(f) Remove the fuel cap then fill the wing to the desired level.

Note: When adding fuel to only one wing, the wing being fueled should be filled to the same level as the other wing.

(g) Remove the fuel service nozzle then install the fuel cap.

(h) Move the fire extinguisher, protective mat, and fuel service nozzle to the remaining wing to be filled.

(i) Put the protective mat on the wing and around the fuel tank filler port.

(j) Remove the fuel cap then fill the wing to the desired level.

(k) Remove the fuel service nozzle then install the fuel cap.

(l) Remove the protective mat from the fueling area.

(m) Disconnect the grounding cable from the nose gear tow bracket and the fuel service nozzle.

(n) Return the fire extinguisher to its storage area.

B. Oil System

Refer to the current revision of Pratt & Whitney PT6A-67A Maintenance Manual P/N 3036132. The following steps are recommended by Pratt & Whitney for best results.

CAUTION: To avoid overfilling the oil tank, the oil level should be checked within 30 minutes of engine shutdown. After 30 minutes the engine should be run before checking the oil level. The ideal time to inspect the oil level is 15 to 20 minutes after engine shutdown.

Note: The airplane should always be parked on level ground with the engine off when inspecting the oil level.

(1) Oil System Replenishing

(a) Open the access door on the upper left side of the cowling.

(b) Remove then wipe the oil dip stick with a clean cloth.

(c) Install the dipstick then lock, remove, and examine the dipstick.

(d) Check the oil level against the marking on the dipstick.

(e) Service as necessary using oil type specified in the latest revision of Pratt & Whitney Service Bulletin No. 14001.

Note: Service the oil to the level that results in acceptable consumption, down to 3 US quarts (2.84 liters) below maximum if necessary. For engines with an oil sight gauge keep the level within the green band. This practice is acceptable due to the large usable oil quantity, if the oil level is monitored in accordance with the engine maintenance manual and ensuring the consumption allowance and operation are within the recommended oil temperature and pressure.

(f) After the oil level has been confirmed install the filler cap.

(g) Close and secure the access door in the cowling.

C. Brake System

(1) Brake Fluid Replenishing

(a) Remove the upper cowling (refer to Chapter 71-10).

(b) Remove any dirt, grime, or contamination from the reservoir before removing the cap.

(c) Remove the cap then add brake fluid (type MIL-PRF-83282 or MIL-PRF-87257) as necessary. Add fluid to the reservoir if it is less than 3/4 full.

Note: The brake reservoir holds approximately 5 oz. when full.

(d) Install the filler cap.

(e) Install the cowling (refer to Chapter 71-10).

D. Hydraulic System

(1) Fluid Servicing

CAUTION: The landing gear must be down and locked and the hydraulic system pressurized to correctly perform the hydraulic system service.

Note: MIL-PRF-83282 and MIL-PRF-87257 are both acceptable fluids, AeroShell #31 or Brayco 881 are preferred. The hydraulic reservoir holds approximately 1 gallon when full.

(a) If performed within 1 hour of engine shutdown and the airplane is on a level surface, the hydraulic system can be serviced without pressurizing the system. Connect a hydraulic service cart to the airplane and proceed to step (c).

(b) If the hydraulic system need to be pressurized, do the steps that follow:

(i) Raise the airplane using aircraft jacks (refer to Chapter 7-10).

(ii) Level the airplane (refer to Chapter 8-20).

(iii) Remove the hydraulic servicing access panel in front of the right wheel well.

(iv) Connect the hydraulic service cart to the airplane. Make sure the service cart is configured to draw fluid from the service cart or other source of clean hydraulic fluid.

(v) Connect a ground power unit to the airplane (refer to Chapter 24-40).

(vi) Make sure the GEAR CTRL circuit breaker is in.

(vii) Set the BATT 1 and BATT 2 switches to ON.

(viii) Turn the hydraulic service cart on.

(ix) With the gear down and locked, turn on the hydraulic service cart then wait for the hydraulic system to enter recirculation mode, then turn the hydraulic service cart off.

(x) Set the BATT 1 and BATT 2 switches to off.

(c) Check the fluid level on the primary sight gauge on the right side of the hydraulic reservoir body. With the landing gear down and the hydraulic system pressurized, the fluid should not be below the 1/2 level in the primary sight gauge, refer to Figure 12-10.1.

CAUTION: If the hydraulic service cart has adjustable flow, it is recommended to set the flow at a low rate to control the filling speed and help prevent over-servicing and damage to pneumatic system components.

(i) Turn on the hydraulic service cart and observe the primary sight gauge on the right side of the reservoir.

(ii) Turn off the hydraulic service cart when the fluid level is between the 3/4 and full levels in the primary sight gauge.

CAUTION: Running the aircraft engine with an over-serviced hydraulic reservoir can damage pneumatic system components.

(iii) If it can not be determined that the servicing stopped at the full level of the primary sight gauge and/or the secondary sight gauge is over 1/2 full, the reservoir is considered over-serviced. Drain the reservoir until the level is between 3/4 and full in the primary sight gauge.

(iv) Disconnect the ground power unit from the airplane (refer to Chapter 24-40).

(v) Disconnect the hydraulic service cart.

(vi) Install the hydraulic servicing access panel in front of the right wheel well.

(vii) Lower the airplane and remove the jacks (refer to Chapter 7-10).

Figure 12-10.1: Hydraulic Reservoir Servicing

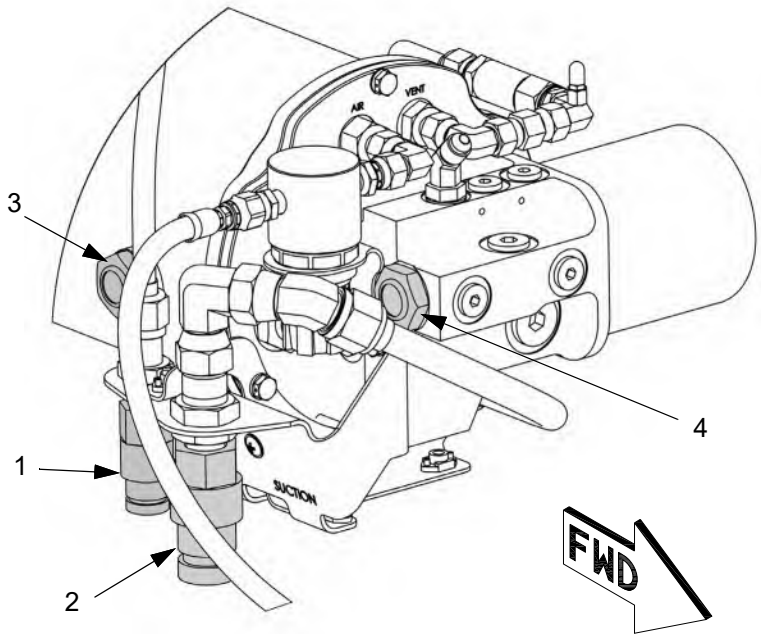

LEGEND

1. Pressure Connection
2. Suction Connection
3. Primary Sight Gauge
4. Secondary Sight Gauge

PRIMARY SIGHT GAUGE LEVEL

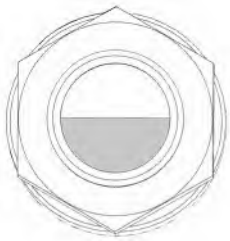

1/2 full,
no service needed.

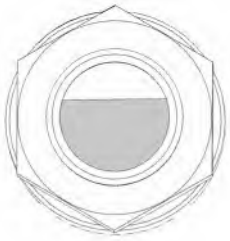

Between 1/2 and full,
no service needed.

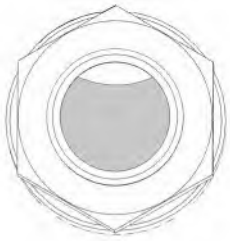

Over 3/4 full,
no service needed.

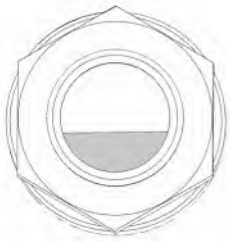

Below 1/2 full,
requires Service.

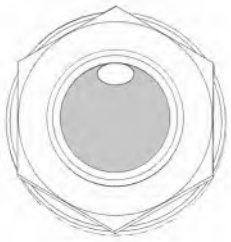

Trapped air bubble,
possibly over-serviced.
If the fluid level in the secondary sight gauge is above 1/2, drain the reservoir to correct the fluid level.

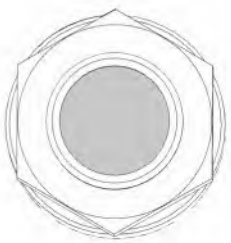

Full sight gauge,
possibly over-serviced.
If the fluid level in the secondary sight gauge is above 1/2, drain the reservoir to correct the fluid level.

(2) Nitrogen Servicing the Accumulator

(a) Raise the airplane using aircraft jacks (refer to Chapter 7-10).

(b) Connect a ground power unit to the airplane (refer to Chapter 24-40).

(c) Set the BATT 1 and BATT 2 switches to ON.

(d) Set the landing gear handle to the UP position.

Note: Selecting gear UP without hydraulic power applied will bleed off remaining hydraulic pressure. The amount the landing gear move is dependent on how much pressure remains in the system.

(e) When the landing gear stop moving, put the landing gear handle in the DOWN position.

(f) Remove the airplane belly panels as needed to access the accumulator (refer to Chapter 57-10).

(g) Charge the accumulator to 1200 ± 50 psig at 70°F using nitrogen conforming to A-A-59503.

(h) Manually put all three landing gear in the down and locked position.

(i) Make sure all three landing gear have green down and locked indications.

(j) Set the BATT 1 and BATT 2 switches to OFF.

(k) Disconnect the ground power unit from the airplane (refer to Chapter 24-40).

(l) Install the airplane belly panels (refer to Chapter 57-10).

(m) Lower the airplane and remove the jacks (refer to Chapter 7-10).

Table 12-10.2: Nitrogen Accumulator Service

Nitrogen Pressure Versus Temperature		
Temperature (ºC)	Temperature (ºF)	Fill Quantity (psi)
-40	-40	948
-34	-30	970
-29	-20	994
-23	-10	1017
-18	0	1040
-12	10	1063
-7	20	1085
-1	30	1108
4	40	1132
10	50	1155
16	60	1177
21	70	1200
27	80	1223
32	90	1245
38	100	1268
43	110	1291
49	120	1315
54	130	1338

(3) Nitrogen Servicing the Hydraulic Noise Suppressor

(a) Make sure the hydraulic system is depressurized (refer to Chapter 29-10).

(b) Gain access to the Hydraulic Noise Suppressor (refer to Chapter 29-10).

(c) Remove the valve cap from the high pressure valve.

(d) Connect a nitrogen service cart using nitrogen conforming to A-A-59503 to the high pressure valve.

(e) Loosen the outer nut approximately two turns while holding the inner nut stationary.

(f) Recharge the Hydraulic Noise Suppressor to 150 +0/-50 psig at 70°F(21°C).

(g) Let the tank cool for 10 minutes then check the pressure again to verify it is 150 +0/-50 psig. Add more nitrogen as necessary.

(h) Tighten the outer nut while holding the inner nut stationary.

(i) Install the valve cap.

(j) Restore items removed to access the Hydraulic Noise Suppressor (refer to Chapter 29-10).

E. Main Landing Gear Damper

(1) Fluid Servicing

The main landing gear strut can not be easily fluid serviced. The strut must be removed from the airplane then emptied of as much existing fluid as possible before refilling. Refer to Chapter 32-10.2.B. (3).

(2) Nitrogen Servicing

(a) Raise the airplane using aircraft jacks. Ensure there is sufficient clearance from the ground to rotate the nose gear assembly.

(b) Install a tail stand.

(c) Remove the valve cap from the high pressure valve then loosen the outer nut one to two turns while holding the inner nut stationary.

(d) Connect a nitrogen line to the Schrader valve.

(e) Pressurize the strut to 297 ± 3 psi of nitrogen (Type I, Class 2, A-A-59503).

(f) Close the valve snug then give the nut an additional 1/8 turn.

(g) Use soapy water to do a leak test on the valve.

(h) Install the valve cap.

(i) Ensure the landing gear is fully extended and locked.

(j) Remove the tail stand then lower the airplane.

F. Nose Landing Gear Strut

(1) Fluid Servicing

(a) Jack the aircraft (refer to Chapter 7-10).

Note: Make sure the tires are clear of the ground and the strut is fully extended.

CAUTION: Wear appropriate Personal Protective Equipment (PPE) and use caution when relieving nitrogen pressure from the nose strut.

(b) Remove the valve cap and slowly open the outer nut on the Schrader valve located at the top of the strut to relieve all nitrogen pressure from the strut.

(c) Cut the safety wire and remove the Schrader valve from the strut.

(d) Smoothly cycle the strut four complete times (collapsed to extended).

(e) Leave the strut extended for a minimum of 10 minutes.

(f) Lightly tap on the strut at the beginning of the 10 minute cycle with a dead blow hammer to release any air bubbles that may be entrapped within the strut.

(g) Collapse the strut completely.

(h) With the strut fully collapsed, fill the strut with MIL-PRF-87257 (Aeroshell 51 recommended) until fluid begins to flow out of the Schrader hole (approximately 27.7 ±0.5 fl-oz total).

(i) Repeat steps (d) through (h) until the fluid level is consistently at the bottom of the Schrader valve hole.

Note: Rotating the nose wheel side-to-side while cycling the strut will help remove air.

(j) With the strut fully collapsed, fill the strut with MIL-PRF-87257 (Aeroshell 51 recommended) until fluid begins to flow out of the Schrader hole.

(k) Install the Schrader valve with a new o-ring and torque to 115 - 125 in-lbs and install safety wire (refer to Chapter 20-50).

Note: Lubricate the o-ring with hydraulic fluid.

(l) Do the Nitrogen Servicing procedure.

(m) After the nitrogen service is done and the aircraft lowered off jacks, do a leak check of the Schrader valve with soapy water.

(2) Nitrogen Servicing

(a) Jack the aircraft (refer to Chapter 7-10).

Note: Make sure the nose wheel is clear of the ground.

(b) Remove the valve cap from the Schrader valve then loosen the outer nut one to two turns while holding the inner nut stationary.

(c) Connect the nitrogen source to the Schrader valve.

(d) Pressurize the strut to 130.5 ± 3 psi of nitrogen (Type I, Class 2, A-A-59503).

(e) Close the Schrader valve and torque the nut to 50 - 60 in-lbs.

(f) Disconnect the nitrogen source.

(g) Use soapy water to do a leak check on the Schrader valve.

(h) Install the valve cap and torque to 5 - 15 in-lbs.

CAUTION: Make sure the landing gear is fully extended and locked.

(i) Lower the aircraft and remove the jacks (refer to Chapter 7-10).

G. Emergency Landing Gear Extension Bottle

(1) Nitrogen Servicing

(a) Open the fire extinguisher storage door in the cockpit.

(b) Remove the valve cap from the high pressure valve.

(c) Connect a nitrogen service cart using nitrogen conforming to A-A-59503 to the high pressure valve.

(d) Loosen the outer nut one to two turns while holding the inner nut stationary.

(e) Recharge the emergency landing gear extension bottle to 2000 psig - 2560 psig with the bottle temperature of 70°F.

Note: Service the landing gear extension bottle in 500 psi increments. Allow the bottle to cool for 1 minute after each 500 psi. Allow the bottle to fully cool to ambient temperature to check the final pressure.

(f) Tighten the outer nut while holding the inner nut stationary.

(g) Install the valve cap.

(h) Close the fire extinguisher storage door.

Table 12-10.3: Emergency Landing Gear Extension Bottle Service Pressure

Nitrogen Fill Pressure Versus Temperature			
Temp (ºC)	Temp (ºF)	Lower (psi)	Upper (psi)
4.4	40	1885	2414
7.2	45	1904	2438
10	50	1923	2462
12.8	55	1942	2487
15.6	60	1961	2511
18.3	65	1980	2535
21.1	70	2000	2560
23.9	75	2019	2584
26.7	80	2038	2608
29.4	85	2057	2632
32.2	90	2076	2657
35	95	2095	2681
37.8	100	2114	2705

H. Tires

The nose landing gear uses a 15 x 6.00-6, 10 ply tubeless tire. The main landing gear uses a 18 x 5.5-10, 10 ply tubeless tire. Tires should be inspected and serviced regularly. During service, check the tires for flat spots, splitting, cuts, visible chord, possible slippage (the valve stem should be lined up with the index spot on the tire), and any signs of abnormal wear.

CAUTION: Always check tire pressure using an accurate calibrated gage with the airplane on a smooth level surface.

Note: Consider load factor and ambient temperature when checking tire pressure. Air pressure in the tire will increase when the tire is subjected to loads and when temperature increases.

(1) Tire Servicing

(a) Install wheel chocks.

(b) Remove the valve cap then test the tire pressure using an accurate calibrated pressure gage.

(c) Service the tire as needed. The use of nitrogen is recommended.

Nose Wheel Tire Pressure: 65 to 70 psi (448.2 to 482.63 kPa)
Main Wheel Tire Pressure: 103 to 108 psi (710.16 to 744.6 kPa)

(d) Apply soapy water to the valve core to check for leakage.

(e) Install the valve cap to protect the valve from contaminants.

I. Oxygen System

The oxygen system is a high pressure storage cylinder and a pressure regulator with shut off valve. Oxygen ports, lines, masks, and containers are used for the crew and passengers. A pressure transducer gives oxygen quantity for the crew.

WARNING: Use only MIL-O-27210 or MIL-PRF-27210J aviator's breathing oxygen for system recharging. Never use medical or welding oxygen to re-service the system. Non-aviation oxygen may contain moisture which can collect and freeze rendering the oxygen system inoperative.

WARNING: Inspect the filler neck for cleanliness before attaching the service hose. Wash hands before servicing the oxygen system. Fill the airplane bottle slowly to prevent excessive heat buildup.

(1) Verify the OXYGEN BOTTLE switch is OFF.

(2) Find and remove the oxygen fill port protective cap which is immediately inside the cabin door.

(3) Connect the oxygen service line.

(4) Slowly fill the oxygen bottle. Rapid filling causes a temperature rise due to the compression of gas into the oxygen cylinder.

(5) Fill the system to 1850 psig at 70°F.

Note: The gauge at the fill port is for information only. Use the oxygen indication on the Garmin avionics system for accurate pressure indication.

(6) Shut off the oxygen supply to the airplane.

(7) Let the oxygen bottle temperature stabilize.

(8) Verify the airplane oxygen quantity is in the normal operating range.

(9) Disconnect the service line from the fill port then install the protective cap.

Table 12-10.4: Oxygen Service

Oxygen Fill Pressure Versus Temperature			
Temperature (ºC)	Temperature (ºF)	Fill Quantity (psi)	Minimum Dispatch (psi)
-40	-40	1466	1188
-34	-30	1501	1217
-29	-20	1536	1245
-23	-10	1571	1273
-18	0	1606	1302
-12	10	1640	1330
-7	20	1675	1358
-1	30	1710	1387
4	40	1745	1415
10	50	1780	1443
16	60	1815	1472
21	70	1850	1500
27	80	1885	1528
32	90	1920	1557
38	100	1955	1585
43	110	1990	1613
49	120	2025	1642
54	130	2060	1670

This Page Intentionally Left Blank

SCHEDULED SERVICING

1. Description

This section specifies the procedures for scheduled servicing of the airplane.

2. Maintenance Practices

A. Fuel System

(1) Safety Precautions

(a) A fire extinguisher must be available and accessible.

(b) Electrically ground the airplane nose gear tow mount bracket and the fuel service equipment before fueling and defueling the airplane.

(c) Ensure the fuel tank vents are unobstructed.

(d) Ensure aircraft fueling operations are over 100 feet (30.48 meters) away from energized electrical equipment capable of producing sparks.

(e) No open flames within 100 feet (30.48 meters) of the airplane or fueling vehicle.

(f) No smoking within 100 feet (30.48 meters) of the airplane or fueling vehicle.

(g) Do not operate electrical equipment or electrical switches during fueling or defueling of the airplane.

(h) Frequently inspect the fuel for ice formation during cold weather operation.

(i) Sample the fuel for any moisture or contaminates after each refueling and before the first flight of the day. Wait at least five minutes for any moisture and sediment to settle before flushing fuel drain valves.

(2) Defueling the Airplane

(a) Park the airplane on level ground in a well ventilated location outside of the hangar.

(b) Ensure the airplane remains stationary using wheel chocks on the main wheels.

(c) Provide a suitable container of the appropriate size for fuel collection.

(d) Electrically ground the airplane and the container.

Note: If the fuel level is low enough and the aircraft is not being weighed, the fuel can be drained from the fuel drains in the wings.

(e) Remove the top cowling (refer to Chapter 71-10).

(f) Disconnect the engine supply fuel line at the firewall then install a fuel drain hose of adequate length to reach the fuel drain container.

(g) Put the open end of the drain hose into the container.

(h) Connect a ground power unit to the airplane (refer to Chapter 24-40).

(i) Turn the fuel selector to the wing to be defueled.

(j) Remove the fuel filler cap from the wing to be drained.

(k) Activate the fuel pump. Let the fuel pump operate until the wing is empty then turn off the pump immediately.

CAUTION: Do not let the electric fuel pump run dry for more than 2 seconds.

(l) Repeat steps (i) through (k) to defuel the remaining wing, if desired.

(m) Disconnect external electrical power from the airplane (refer to Chapter 24-40).

(n) Install the filler cap.

(o) Remove the fuel drain hose.

(p) Connect the engine supply fuel line to the firewall.

(q) Install the cowling (refer to Chapter 71-10).

(r) Drain the remaining fuel into suitable containers using the drain valves on the wings.

B. Oil System

(1) Changing Engine Oil and Oil filter

(a) Park the airplane on level ground.

(b) Verify the BATT 1 and BATT 2 switches are set to OFF.

(c) Disconnect external electrical power from the airplane (refer to Chapter 24-40).

(d) Remove the lower cowling (refer to Chapter 71-10).

(e) Change the oil and the oil filter in accordance with the current revision of the Pratt & Whitney Engine Maintenance Manual, P/N: 3036132. Install the cowling (refer to Chapter 71-10).

Engine Oil Drain Plug Locations

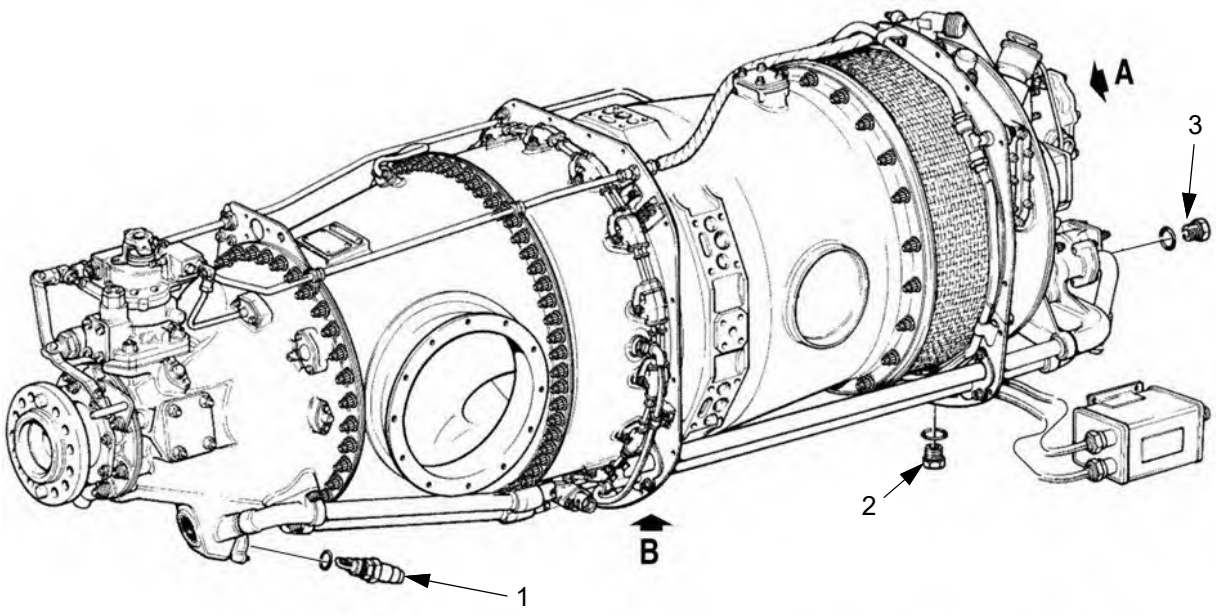

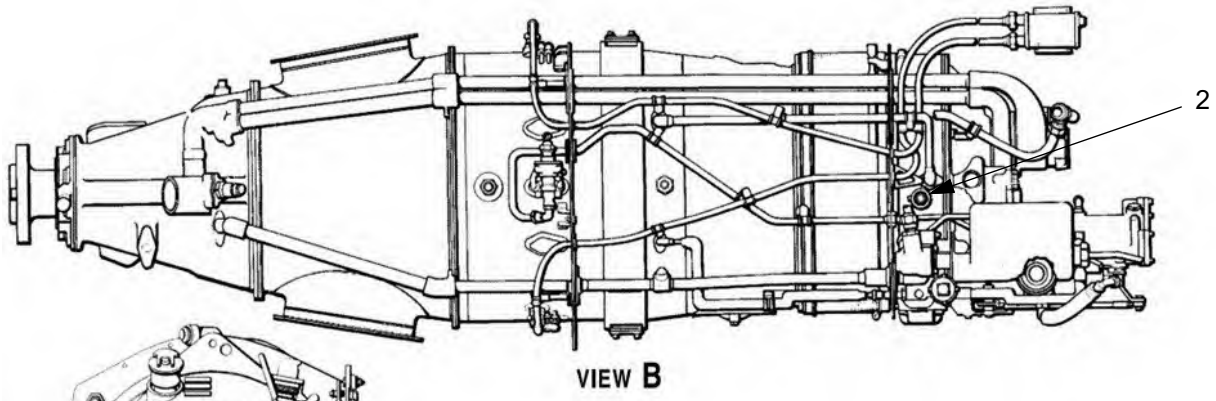

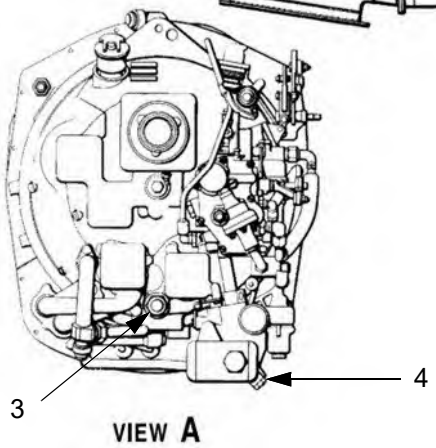

LEGEND

1. Chip Detector
2. Forward Drain Plug
3. Upper Drain Plug
4. Oil-to-Fuel Heater Drain Plug

C. Brake System

The brake system has a hydraulic fluid reservoir through which the system can be serviced. Brake fluid is drawn from the reservoir by the brake master cylinders to maintain the volume of fluid required for maximum braking efficiency. A “spongy” feel when using the brake pedals is often an indication that the brake fluid reservoir is low on fluid or air has become trapped in the system. When repairs to the brake system are done, the reservoir will have to be filled or serviced to maintain a safe level of fluid.

(1) Draining the Brake System

(a) Put the airplane on level ground.

(b) Set the BATT 1 and BATT 2 switches to OFF.

(c) Put a suitable drain pan under the applicable brake caliper.

(d) Disconnect the brake fluid supply line from the brake caliper.

(e) Pump the brake pedal associated with that brake caliper to empty the supply line of fluid.

(f) When the reservoir nears empty, fill the reservoir using denatured alcohol. Maintain the prime of the system by continually filling it with alcohol as you flush the system.

(2) Filling the Brake Fluid Reservoir

(a) Remove the upper cowling (Refer to Chapter 71-10).

(b) Remove the bolt and washer in the fill port next to the vent.

(c) Add hydraulic fluid conforming to the latest revision of MIL-PRF-83282 or MIL-PRF-87257, as necessary.

(d) Re-install the bolt and washer into the fill port.

(e) Install the cowling (refer to Chapter 71-10).

D. Hydraulic System

Refer to Chapter 29-10.2.H.

E. Lubrication

Data is given in this section defining points of lubrication, points to avoid lubricating, scheduled lubrication intervals, and lubricant specifications.

The lubrication schedule should be used in conjunction with the Annual /100 Hour Inspection checklist.

Note: If the airplane is NOT being operated for hire as defined by 14 CFR Part 91.409, lubrication may be performed annually unless otherwise indicated.

Table 12-20.1: Lubricants

	Lubricant	Manufacturer	Specification
1	Lubriplate No. 130AA	Lubriplate	MIL-G-46003
2	Aeroshell 4	Shell Oil	MIL-H-5606A
3	Aeroshell 22	Shell Oil	MIL-G-81322
4	Aeroshell 31	Shell Oil	MIL-PRF-83282D
5	Aeroshell 64	Shell Oil	MIL-G-21164D
6	LPS-1	LPS Labs	MIL-C-23411A
7	Loctite™ LB 8632 or Lubriplate No. 630-2	Henkel Adhesive Technologies Lubriplate	-
8	SHC 100	Mobil	-

Table 12-20.2: Lubrication Schedule

	Location	Lubricant	Interval
1	Nose gear assembly	Aeroshell 22	Annual/100 Hour, Phase C
2	Nose Wheel Centering Device	Aeroshell 22	Annual/100 Hour, Phase C
3	Nose gear steering	LPS-1	Annual/100 Hour, Phase C

4	Main gear assembly	Aeroshell 22	Annual/100 Hour, Phase C
5	Main gear damper	Aeroshell 51	As necessary
6	Rudder Limiter Solenoid Rod	LPS Dry Film PTFE Lubricant	Annual/100 Hour, Phase D
7	All piano hinges	LPS-1	Annual/100 Hour, Phase C
8	Door Pins	Loctite™ LB 8632 or Lubriplate No. 630-2	Annual/100 Hour, Phase D
9	Hydraulic Pump Shaft Splines	Aeroshell 64	500 hours
10	Flap Actuator Jackscrew	Lubriplate 130 AA	Annual/100 Hour, Phase C
11	Pilot and Copilot Seat Rails	Paraffin Wax	Annual/100 Hour, Phase D
12	Contact surfaces of the left and right steering kickout arms and contact plates.	Aeroshell 64	Annual/100 Hour, Phase C

Note: Do not lubricate the following airplane components:

1. **Nose and main landing gear actuator rod end.**
2. **Landing gear uplock bearings.**
3. **Aileron hinge bearings.**
4. **Rudder hinge bearings.**
5. **Elevator hinge bearings.**
6. **Flaps hinge bearings.**
7. **Rudder pedal torque tube bearings.**
8. **Rudder pedal push rod bearings.**
9. **Flaps torque tube bearings.**
10. **Aileron bellcrank bearings.**
11. **All control cable pulleys.**
12. **Steering system attachment points.**
13. **All control surface and trim tab rod ends.**

(1) Main Gear

Grease the main gear lubricated bushings using Aeroshell 22. The locations of the grease fittings or lubrication points are shown below.

Note: If grease does not extrude from both sides of the lower bracket assembly, the lower pivot pin should be removed, cleaned, and inspected per Ch 32-10. Inspect bushings and grease grooves while disassembled.

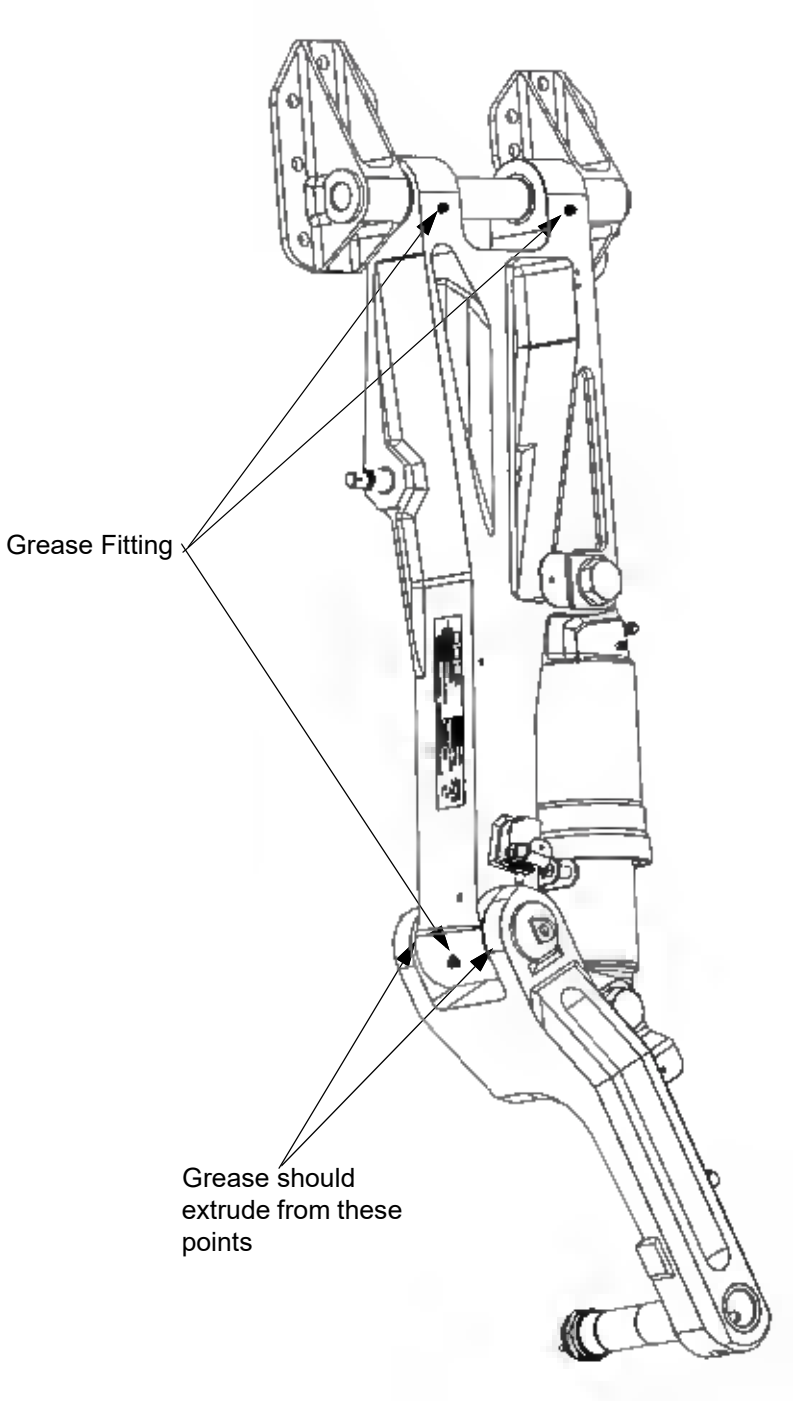

Right side shown, left side opposite.

(2) Nose Gear

Grease the nose gear lubricated bushings using Aeroshell 22 and check gear for free return to center from both directions. The locations of the grease fittings or lubrication points are shown below.

Note: Make sure the nose gear is clear of the ground when greasing the upper bushing. Add grease until grease escapes between the bottom of the distance piece and the top of the nose gear housing. If grease does not extrude from the bottom of the distance piece, remove, clean and inspect the distance piece per Ch 32-20. If gear does not return to center, remove distance piece to clean and lubricate the two washers under the distance piece per Ch 32-20.

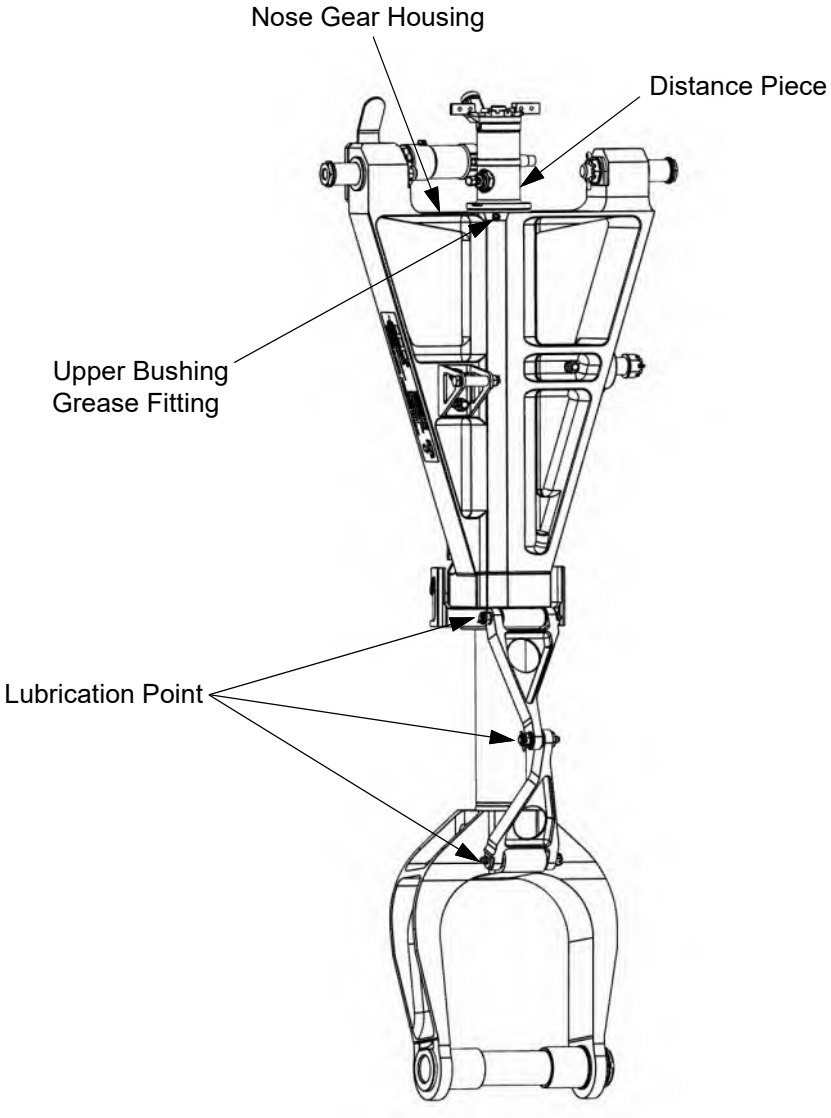

(3) Engine Mount

Grease the lower engine mount lubricated bushings using Aeroshell 22. The locations of the grease fittings or lubrication points are shown below.

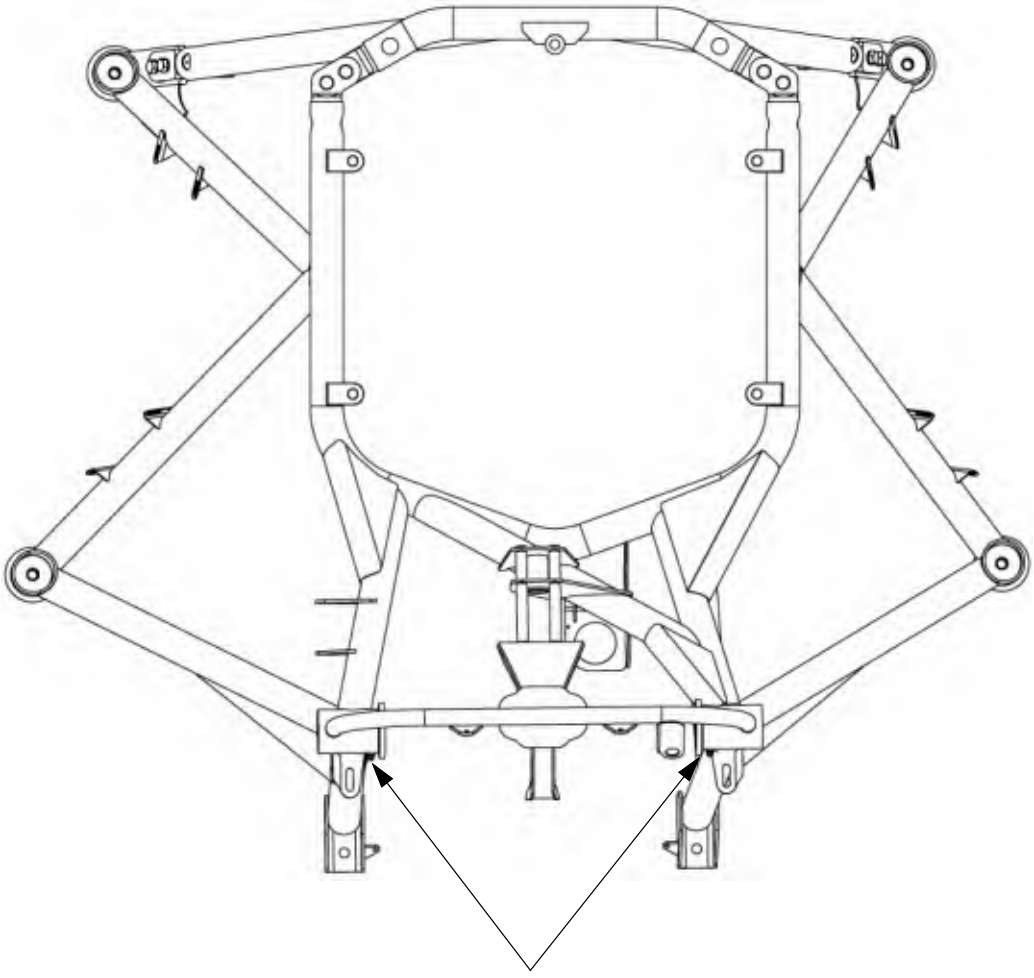

Lower Engine Mount
Grease Fitting

F. Cleaning

The exterior of the airplane, including the propeller, should be kept clean to ensure optimal aerodynamic performance. The seal coats of the paint system applied to the airplane give solar and moisture protection that may be enhanced by the regular application of a good quality silicone-free wax. The wax also improves the removal of dirt and bug debris from the airplane when washed using warm soapy water.

CAUTION: Do not apply wax or ceramic coating to new paint until it has cured a minimum of 90 days for wax, or 6 months for ceramic coating. During this time, gently wash the uncured paint surface using mild non-detergent soap and cold or lukewarm water.

(1) Washing the Exterior

(a) Cover the pitot tubes, brake discs, and static ports to prevent damage.

(b) Remove loose dirt, mud, and insects by rinsing the airplane using fresh water.

(c) Wash the airplane using mild non-detergent soap and fresh water.

(d) Rinse off the soapy water.

Note: RealClean SootMaster is recommended for removing soot.

(e) Dry the airplane using clean cotton cloth, clean chamois, or lint free microfiber towels.

Note: New or freshly laundered lint-free microfiber towels are recommended for all cleaning.

Note: P&S Bead Maker is recommended for a final cleaning of the airplane.

(f) Uncover then inspect the pitot tubes, brake discs, and static ports.

WARNING: Ensure the pitot tube and static port orifices are clear and unobstructed.

(2) Windshield and Windows

The windshield and windows of the airplane are made of acrylic plastic. Clean the acrylic windshield and windows using only fresh water, mild non-detergent soap (dish washing soap), and acrylic cleaner.

CAUTION: Do not use anything containing ammonia, household window cleaners, petroleum based solvents, gasoline, acetone, benzene, carbon tetrachloride, fire extinguisher solutions, or de-icing fluid to clean the acrylic windshield and windows. The use of these materials may cause the surface of the windshield or window to fog or craze.

CAUTION: Do not use any type of paper towel to clean or dry the acrylic windshield or windows.

(a) The person cleaning the windows should remove jewelry such as rings, watches, and bracelets. Roll up the sleeve of long-sleeved shirts to cover exposed buttons.

(b) Remove any grease or oil using a clean cotton cloth saturated with kerosene followed by a thorough rinse using clean water

(c) Remove dust and contaminants using a rinse of clean water and/or a mild non-abrasive dish soap solution, pouring from the top of the window down. Let accumulations of dirt and insects soak for a few minutes to soften then rinse using clean water. Avoid touching the window, but if required gently rub persistent contamination using a bare hand.

(d) Dry the window using a clean cotton cloth, clean chamois, or lint-free microfiber towel.

Note: New or freshly laundered lint-free microfiber towels are recommended for all cleaning.

Note: Prist Window Cleaner is recommended for initial cleaning followed by DAM Window Cleaner.

(e) When polishing the windshield and windows ensure the acrylic surface is clean then use an approved polish in accordance with the polish manufacturer's instructions.

(3) Cleaning the Interior

Cleaning the airplane interior generally consists of the removal of dust and dirt from the headliners, interior panels, seats, and carpet by vacuuming at regular intervals. Clean other surfaces such as the instrument panel, yokes, knobs, and trim by wiping them down using a damp cotton cloth.

Soiled carpet can be cleaned using any mild foam household carpet cleaning product and small spots can be cleaned using a suitable spot remover in accordance with the manufacturer's instructions. Test the carpet cleaner and spot remover in an inconspicuous area of the carpet to ensure it will not cause damage.

(a) Remove large pieces of dirt and trash using a whisk broom.

(b) Remove small particles of dirt and dust using a vacuum cleaner.

(c) Wipe un-upholstered surfaces using a clean damp cotton cloth.

(d) Clean the seats in accordance with Millennium document number 2041-CMM022 for crew seats, and 2041-CMM019 for passenger seats.

UNSCHEDULED SERVICING

1. Description

This section specifies the procedures for unscheduled servicing of the airplane.

2. Maintenance Practices

A. Ice and Snow Removal

Do not let ice and snow remain on the airplane. The recommended method for removal of accumulated ice and snow is to move the airplane into a heated hangar.

CAUTION: Never use sharp objects to remove ice and snow.

WARNING: All surfaces of the airplane must be completely free of ice and snow accumulation before flight.

This Page Intentionally Left Blank

CHAPTER
20

Standard Practices
Airframe

This Page Intentionally Left Blank

List of Effective Pages

Chapter/Section	Page Number	Effective Date
20-Title	Page 1	02 Jan 2020
20-Title	Page 2	02 Jan 2020
20-LOEP	Page 1	10 Jul 2025
20-LOEP	Page 2	10 Jul 2025
20-TOC	Page 1	16 May 2022
20-TOC	Page 2	20 Oct 2023
20-00	Page 1	13 Apr 2020
20-00	Page 2	02 Jan 2020
20-10	Page 1	13 Apr 2020
20-10	Page 2	02 Jan 2020
20-20	Page 1	02 Jan 2020
20-20	Page 2	02 Jan 2020
20-30	Page 1	02 Jan 2020
20-30	Page 2	02 Jan 2020
20-40	Page 1	16 May 2022
20-40	Page 2	16 May 2022
20-50	Page 1	11 Nov 2020
20-50	Page 2	02 Jan 2020
20-50	Page 3	02 Jan 2020
20-50	Page 4	02 Jan 2020
20-50	Page 5	02 Jan 2020
20-50	Page 6	02 Jan 2020
20-50	Page 7	02 Jan 2020
20-50	Page 8	02 Jan 2020
20-50	Page 9	02 Jan 2020
20-50	Page 10	02 Jan 2020
20-60	Page 1	20 Oct 2023
20-60	Page 2	20 Oct 2023
20-60	Page 3	20 Oct 2023
20-60	Page 4	20 Oct 2023
20-60	Page 5	20 Oct 2023
20-60	Page 6	20 Oct 2023
20-60	Page 7	20 Oct 2023
20-60	Page 8	20 Oct 2023

20-70 ..... Page 1 ..... 20 Oct 2023
20-70 ..... Page 2 ..... 20 Oct 2023
20-70 ..... Page 3 ..... 10 Jul 2025
20-70 ..... Page 4 ..... 20 Oct 2023
20-70 ..... Page 5 ..... 20 Oct 2023
20-70 ..... Page 6 ..... 20 Oct 2023

Table of Contents

List of Effective Pages ..... 20-LOEP / Page 1
Table of Contents ..... 20-TOC / Page1

Paragraph **Page Number**

Standard Practices -- Airframe
1. General ..... 20-00 / Page 1

Adhesives
1. Description ..... 20-10 / Page 1
2. Maintenance Practices ..... 20-10 / Page 1
   A. Adhesives ..... 20-10 / Page 1

Solvents
1. Description ..... 20-20 / Page 1
2. Maintenance Practices ..... 20-20 / Page 1
   A. Solvents ..... 20-20 / Page 1

Sealants
1. Description ..... 20-30 / Page 1
2. Maintenance Practices ..... 20-30 / Page 1
   A. Sealants ..... 20-30 / Page 1

Thread Locking
1. Description ..... 20-40 / Page 1
2. Maintenance Practices ..... 20-40 / Page 1
   A. Thread Lock ..... 20-40 / Page 1

Safetying
1. Description ..... 20-50 / Page 1
2. Maintenance Practices ..... 20-50 / Page 1
   A. Safety Wiring ..... 20-50 / Page 1
   B. Cotter Pins ..... 20-50 / Page 4
   C. Safetying for Turnbuckles ..... 20-50 / Page 7
   D. Self-Locking Nuts ..... 20-50 / Page 9

Torque Data

1. Description ..... 20-60 / Page 1
2. Maintenance Practices ..... 20-60 / Page 1
   A. Friction Drag Torque ..... 20-60 / Page 1
   B. Torque Wrench Adapters ..... 20-60 / Page 1
   C. Torque Values for Metal and Composites ..... 20-60 / Page 2
   D. Torque Values for MS35842 Worm Drive Hose Clamps ..... 20-60 / Page 4
   E. Torque Values for NAS1922 Worm Drive Clamps ..... 20-60 / Page 4
   F. Torque Values for Marman V-Band Couplings ..... 20-60 / Page 4
   G. Torque Values for Skurka Starter Generator Terminal Block Studs ..... 20-60 / Page 4
   H. Torque Values for CTSG-700 Ground Fault Transformer Studs ..... 20-60 / Page 5
   I. Torque Values for the 410-100-4 Alternator “B” Stud ..... 20-60 / Page 5
   J. Torque Values for MS3506-1 28V Ground Power Receptacle Studs ..... 20-60 / Page 5
   K. Torque Values for MS27212 Terminal Board Studs ..... 20-60 / Page 6
   L. Non-Structural Fastener Torque Values ..... 20-60 / Page 6
   M. Prevailing Torque Values for Locking Fasteners ..... 20-60 / Page 7

Fluid Fittings

1. Description ..... 20-70 / Page 1
2. Maintenance Practices ..... 20-70 / Page 2
   A. Torque Data, Hydraulic, Fuel, and Pneumatic Lines ..... 20-70 / Page 2
   B. Torque Data, Oxygen Lines ..... 20-70 / Page 3
   C. NPT/NPTF Threads ..... 20-70 / Page 3
   D. Bulkhead Nuts ..... 20-70 / Page 4
   E. Legris Fittings ..... 20-70 / Page 5
   F. SAE/ORB Fittings and Plugs ..... 20-70 / Page 6

STANDARD PRACTICES - AIRFRAME

1. General

This chapter describes procedures, practices, and materials that are typical to many areas and systems on the airplane.

This Page Intentionally Left Blank

ADHESIVES

1. Description

This chapter provides information on the adhesives used on the airplane.

2. Maintenance Practices

A. Adhesives

The following adhesives have been approved for use on the airplane by Epic Aircraft, LLC for the areas and items indicated when the adhesive is correctly applied.

WARNING: Unless otherwise indicated, apply and cure the adhesives in accordance with the adhesive manufacturer's instructions.

Item	Part Number	Supplier
Acrylic Adhesive	Plastic Welder™	ITW Devcon
Acrylic Adhesive	Plastic Welder™ II	ITW Devcon
Acrylic Adhesive	Plexus MA 300	ITW PANA
Composite Surfacing Film	Hysol EA 9845 Aero	Henkel
Conductive Paste	Loctite™ Ablestik CT 5047-2 A/B	Henkel
Conductive Paste	LP-89	Epic Aircraft, LLC
Epoxy	Hysol EA 9360 Aero	Henkel
Epoxy	Hysol EA 9696 Aero	Henkel
Epoxy	Hysol EA 9394 Aero	Henkel
Flame Retardant Adhesive	Hysol EA 9364FR	Henkel
Flame Retardant Adhesive	L-9115	L & L Products
Foaming Core Splice Adhesive	Hysol EF 562 Aero	Henkel
Primer	Loctite™ HY 4090	Henkel

This Page Intentionally Left Blank

SOLVENTS

1. Description

This chapter provides information on the solvents used on the airplane.

2. Maintenance Practices

A. Solvents

The following solvents have been approved for use on the aircraft by Epic Aircraft, LLC for the areas and items indicated when the solvent is correctly applied.

WARNING: Unless otherwise indicated, use solvents in accordance with the solvent manufacturer's instructions.

Item	Part Number	Supplier
Cleaner/Degreaser	Isopropyl Alcohol conforming to TT-I-735A	Chemical Specialists and Development, Inc.
Cleaner/Degreaser	Acetone conforming to ASTM D329-07	UNIVAR
Cleaner/Degreaser	SAT-C1-100 Isopropyl Alcohol Wipe	Contec, Inc.

This Page Intentionally Left Blank

SEALANTS

1. Description

This chapter provides information on the sealants used on the airplane.

2. Maintenance Practices

A. Sealants

The following sealants have been approved for use on the airplane by Epic Aircraft, LLC for the areas and items indicated when the sealant is correctly applied.

WARNING: Unless otherwise indicated, store and use sealants in accordance with the sealant manufacturer's instructions.

Item	Part Number	Supplier
Adhesion Promoter	AC 137	3M Chem Seal Products or Distributor
Aerospace Sealant - Fuel Tank	AC 236 B-1/2 AC 236 B-2 AC 236 B-4 CS 3204 Class B-1/2 CS 3204 Class B-2 CS 3204 Class B-4	
Aerospace Sealant - Wing Access Panels, Corrosion Barrier	AC 240 B-1/2	
Aerospace Sealant - De-Ice Boot	AC 251 B-1/2	
Aerospace Sealant - Cabin Windows	PR 1425 B-1/2	PPG Aerospace
Sealant - Fuel Tank	Rhino 9700	Rhino Linings
Sealant	RTV100	Momentive Performance Materials, Inc.
High Temperature Sealant	81409	Permantex

This Page Intentionally Left Blank

THREAD LOCKING

1. Description

This chapter provides information on the thread locking used on the airplane.

2. Maintenance Practices

A. Thread Lock

Thread locking is done using Loctite products manufactured by Henkel Corporation. The type of Loctite used depends on the hardware being secured.

WARNING: Unless otherwise indicated, store and use thread lock solution in accordance with the material manufacturer's instructions.

Item	Part Number	Supplier
Medium Strength	Loctite™ 242	Henkel
High Strength	Loctite™ 262	Henkel
High Strength	Loctite™ 263	Henkel
Refrigerant	Loctite™ 554	Henkel
High Temperature	Loctite™ 567	Henkel
High Strength	Loctite™ 569	Henkel
Retaining Compound	Loctite™ 680	Henkel
Primer	Loctite™ 7471	Henkel

(1) Thoroughly clean bearing surfaces and the threads of hardware to receive thread locking solution using isopropyl alcohol. Let the alcohol dry completely.
(2) Prime the threads using Loctite™ 7471.
(3) Apply the thread lock solution to either the male or the female threads of the hardware.
(4) In blind hole applications, coat the sides of the hole and the first two threads of the male fastener.
(5) Tighten to normal specified torque values.
(6) Wipe excess thread lock solution from the hardware using a clean cloth moistened with isopropyl alcohol.

This Page Intentionally Left Blank

SAFETYING

1. Description

This chapter provides information on safetying techniques and procedures used to ensure the security of the hardware on the airplane. Three methods are used for safetying: safety wire, cotter pins, and self-locking nuts. For additional information on safetying refer to the latest revision of FAA Advisory Circular AC 43.13-1B, Acceptable Methods, techniques, and Practices - Aircraft Inspection and Repair, AIA Specifications NASM 33540 General Practices for Safety Wiring and Cotter Pinning, NASM 33588 Reliability and Maintainability Usage Requirements for Nuts, Self-Locking, Aircraft, and NASM 24665 Pin, Cotter (Split).

2. Maintenance Practices

A. Safety Wiring

There are two basic methods used for the installation of safety wiring. The single-wire method and the double-twist method.

The types of wire used for safety wiring are as follows:

Inconel - Used for general safety wiring at temperatures up to 1500°F (815°C). This wire is uncoated.

Monel - Used for general safety wiring at temperatures up to 700°F (371°C). This wire is uncoated.

Stainless Steel - Used for general safety wiring where corrosion resistance is required. This wire is uncoated.

Copper - Used for shear and seal safety wiring. Shear applications are those where it is necessary to purposely break or shear the wire to permit operation or actuation of emergency devices. Seal applications are those where the wire is used with a lead seal to prevent tampering or use of a device without indication. This wire is cadmium plated and dyed yellow.

Aluminum - Used exclusively for safety wiring magnesium parts. This wire is anodized and dyed blue.

WARNING: Do not use stainless steel, monel, inconel, or aluminum alloy safety wire to secure emergency mechanisms such as switch handles, guard covering handles used on exits, fire extinguishers, emergency gear releases, or other emergency equipment. Some existing structural equipment or safety of flight emergency devices require copper wire (0.020 inch diameter only). Where successful emergency operation of this equipment is dependent on shearing or breaking of the safety wire, particular care should be used to ensure that safetying does not prevent emergency operation.

(1) General Safety Wiring Installation Rules

(a) Do not reuse safety wire. Use new safety wire upon each application.

(b) When bolts, screws, or other parts are closely grouped it is convenient to safety wire them in series. The number of parts that may be wired together depends on their application.

(c) Bolts and screws with drilled heads do not need to be safety wired if they are installed using self-locking nuts.

(d) Safety wire must be tight after installation to prevent failure due to rubbing or vibration.

(e) Install safety wire in a manner that will prevent the tendency of a part to loosen.

(f) Never over-stress safety wire during installation. Maintain a light tension when secured.

(g) Create a pigtail of 1/4 to 1/2 inch (3 to 5 twists) at the end of the wiring.

(h) Bend safety wire ends under and inward toward the part to avoid sharp or projecting ends.

(i) Ensure hardware to be safety wired has been correctly tightened and torqued.

(j) Safety wire must not be nicked, kinked, or mutilated.

(2) Single Wire Method

The single-wire method is used when hardware is installed in a closely spaced, closed geometrical pattern, or in a location that is hard to reach. Use this method for shear and seal wiring applications. This method is also used on parts in electrical systems.

Note: When using the single wire method use the largest diameter wire that will fit through the hardware safetying hole.



External Snap Ring

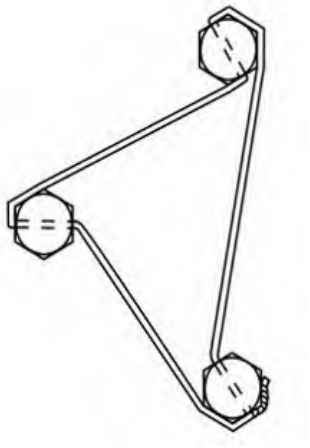

The safety wire is shown installed for right-hand threaded bolts. The safety wire is routed in the opposite direction for left-hand threaded bolts.

(3) Double Twist Method

The double twist method is the most commonly used for safety wiring hardware. Use 0.032 inch minimum diameter wire for parts that have a hole diameter larger than 0.045 inch. Use 0.020 inch diameter wire for parts that have a hole diameter smaller than 0.045 inch or on parts that have a hole diameter between 0.045 and 0.062 inch with a spacing between parts of less than 2 inches.

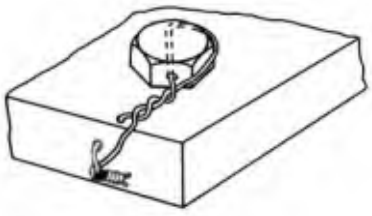

Single Fastener

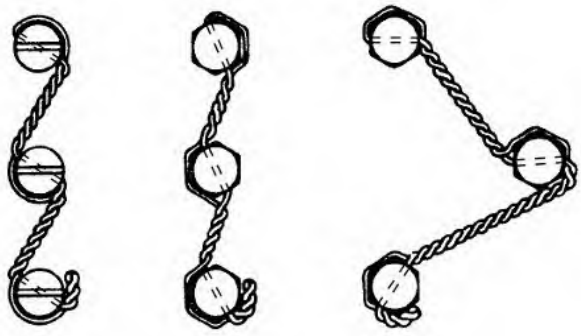

Multiple Fastener

The safety wire is shown installed for right-hand threaded bolts. The safety wire is touted in the opposite direction for Left-hand threaded bolts.

B. Cotter Pins

Castellated nuts are secured using cotter pins.

CAUTION: Do not use cadmium-plated cotter pins if they will come in contact with fuel, hydraulic fluid, or synthetic lubricants.

(1) General Cotter Pin Installation Rules

(a) Select cotter pin material necessary to withstand temperature, atmospheric, and service limitations.

(b) Use a new cotter pin upon each application.

(c) When a nut is to be secured to a fastener using a cotter pin, tighten the nut to the low side (minimum) of the applicable specified or selected torque range, unless otherwise specified, and if necessary, continue tightening until the slot aligns with the hole. Do not exceed the high side (maximum) torque of the torque range.

(d) When more than 50 percent of the cotter pin diameter is above the nut castellation, use a washer under the nut or a shorter fastener. A maximum of two washers may be used under a nut.

(e) Use the largest diameter cotter pin which the hole and slot will accept. Do not use a cotter pin smaller than shown in the following table.

(f) Install the cotter pin with the head firmly in the slot of the nut with the axis of the eye at right angles to the bolt shank. Bend the cotter pin prongs so that the head and upper prong are firmly seated against the bolt.

(g) In pin applications, install the cotter pin with the axis of the eye parallel to the shank of the clevis pin or rod end. Bent the cotter pin prongs around the shank of the pin or rod end.

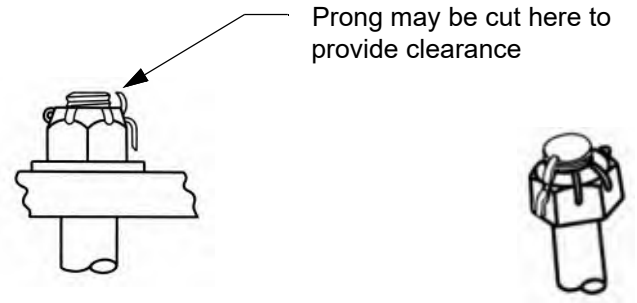

Preferred Method



Alternate Method

Castellated Nut on Bolt

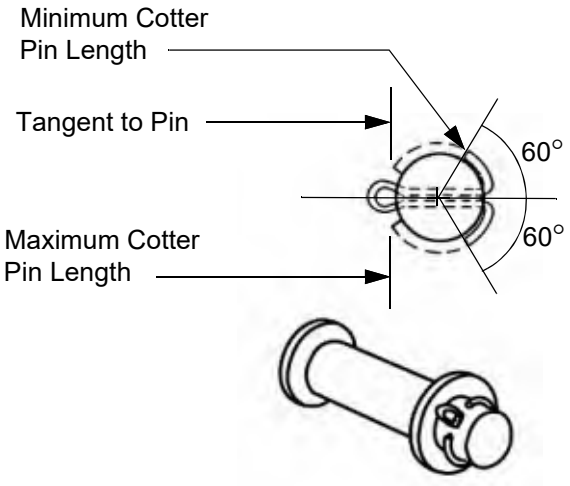

Pin

Cotter Pin Specification		
Material	**Temperature**	**Application**
Carbon Steel	Up to 450°F (232°C)	Normal atmospheres Cadmium plated bolts or nuts
Corrosion Resistant Steel	Up to 800°F (426°C)	Corrosive atmospheres Non-magnetic requirements Corrosion resistant steel bolts or nuts

Minimum Cotter Pin Size	
Fastener Size	**Minimum Pin Diameter**
6	0.028
8	0.044
10	0.044
1/4	0.044
5/16	0.044
3/8	0.072
7/16	0.072
1/2	0.072
9/16	0.086
5/8	0.086
3/4	0.086
7/8	0.086
1	0.086
1-1/8	0.116
1-1/4	0.116
1-3/8	0.116
1-1/2	0.116

C. Safetying for Turnbuckles

Turnbuckles are installed in the aileron, elevator, and rudder cabling systems on the airplane. Locking clips or safety wire are used to safety the turnbuckles. Two locking clips are required for each turnbuckle, one for each terminal.

Note: If the turnbuckle must be adjusted to insert the safety clip, ensure cable tension is still within tolerance.

(1) Locking Clips

(a) When adjusting turnbuckles, ensure both terminals are threaded an equal distance into the turnbuckle body with not more than three threads exposed outside the body.

(b) Rotate the turnbuckle body to the locking position then insert the straight end of the locking clip into the body and terminal until the hook end of the clip is over the hole in the center of the body.

Note: Use a new locking clip at each application.

(c) Press the hook into the hole.

Note: There are two holes in the turnbuckle body that can be used for safetying. It is acceptable for both clips to share the same hole, if necessary.

(d) The clip is correctly installed when the hook end cannot be removed from the hole when the clip is pulled outwards using fingers.

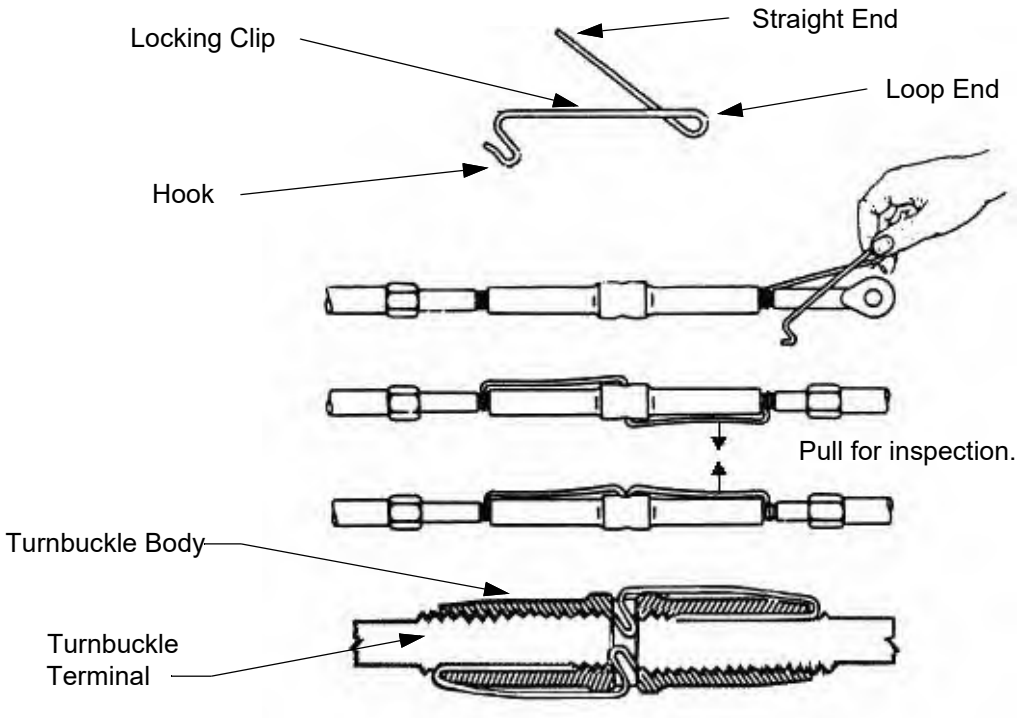

(2) Safety Wire

Note: Only the double-wrap method is approved for use.

(a) Use two separate lengths of wire. Run one end of the first wire through the hole in the barrel of the turnbuckle then bend the ends of the wire toward opposite ends of the turnbuckle.

(b) Pass the second length of wire into the hole in the barrel then bend the ends along the barrel on the side opposite the first. Spiral the two wires in opposite directions around the barrel to cross each other twice between the center hole and the ends.

(c) Then pass the wires at the end of the turnbuckle in opposite direction through the hole in the turnbuckle eyes or between the jaws of the turnbuckle fork, as applicable, laying one wire along the barrel and wrapping the other at least four times around the shank of the turnbuckle and binding the laid wires in position before cutting the wrapped wire off.

(d) Wrap the remaining length of safety wire at least four turns around the shank and cut it off. Repeat the procedure at the opposite end of the turnbuckle.

(e) When a swaged terminal is being safetied, pass the ends of both wires though the hole in the terminal for this purpose and wrap both ends around the shank as previously described. If the hole is not large enough for passage of both wires, pass the wire through the hole and loop it over the free end of the other wire, and then wrap both ends around the shank as previously described. Another satisfactory

double-wrap method is similar to the previous method, except that the spiraling of the wires is omitted.

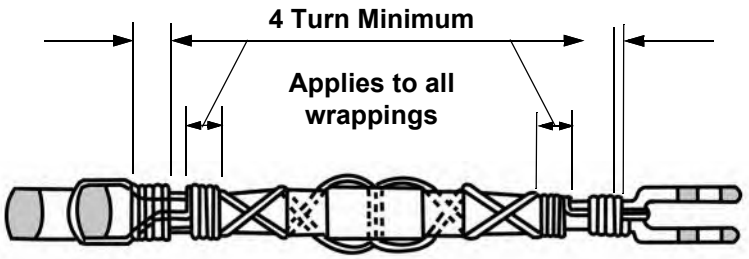

Double Wrap (Spiral)



Double Wrap

D. Self-Locking Nuts

There are two types of self-locking nuts used on the aircraft. The all-metal type and the fiber or nylon type. Self-locking nuts are used in applications that do not require their removal often. Repeated removal and installation causes self-locking nuts to lose their locking ability. Replace self-locking nuts that are unable to maintain their minimum prevailing torque.

Minimum Prevailing Torque Values for Reused Self-Locking Nuts			
Fine Thread		**Coarse Thread**	
Thread Size	Minimum Prevailing Torque (in-lbs)	Thread Size	Minimum Prevailing Torque (in-lbs)
7/16-20	8	7/16-14	8
1/2-20	10	1/2-13	10
9/16-18	13	9/16-12	14
5/8-18	18	5/8-11	20
3/4-16	27	3/4-10	27
7/8-14	40	7/8-9	40
1-14	55	1-8	51
1-1/8-12	73	1-1/8-8	68
1-1/4-12	94	1-1/4-8	88

(1) Installation

(a) Thread the self-locking nut onto the bolt until it is near the washer or bearing surface. Measure the amount of torque required to thread the nut (prevailing torque also known as friction drag torque).

(b) Add the prevailing torque measured to the specified torque for that fastener.

(2) Restrictions on Self- Locking Nut Use

(a) Do not use reworked or reprocessed self-locking nuts for any application.

(b) Do not use self-locking nuts with bolts, screws, or studs to attach access panels or doors, or to assemble any parts that are routinely removed or disassembled.

(c) Do not use self-locking nuts with bolts or screws in locations where the loose nut, bolt, washer, or screw could fall or be drawn into the engine air intake.

(d) Self-locking castellated nuts with cotter pins or lock wire may be used in any system.

(e) Do not use self-locking nuts on parts subject to rotation.

(f) No self-locking nut may be used on any bolt subject to rotation in operation unless a non-friction locking device is used in addition to the self-locking device.

(g) Use only all-metal self-locking nuts forward of the firewall or in high temperature areas.

(h) Bolts, studs, or screws must extend through self-locking nuts for a minimum of two threads including chamfer.

(i) Do not install a self-locking nut backwards.

(j) Dispose of a reused self-locking nut if it can be fully hand tightened onto its mating fastener.

TORQUE DATA

1. Description

This chapter provides torque data for the fasteners used on the airplane. Fasteners requiring a specific torque value will have that torque indicated in the applicable chapter of this manual.

2. Maintenance Practices

A. Friction Drag Torque

Frictional drag torque must be accounted for in all installations, unless the fastener can be assembled by the torque applied by two fingers (finger tight). If the fastener can be assembled by finger tight torque, the frictional drag is assumed to be zero.

Awareness of maximum and minimum friction drag torque should be recognized, but measurement is not required as a standard process. If required, the friction drag torque can be determined by running the nut down to near contact with the washer or bearing surface and check the friction drag torque required to turn the nut. Add the friction drag torque to the desired torque. This is referred to as “final torque,” which should register on the indicator or setting for a snap-over type torque wrench.

B. Torque Wrench Adapters

When using an extended length adapter on a torque wrench, apply the following equation.

$$T_E = (T \times L) / (L + E)$$

T = Specified torque value to achieve
L = Wrench length from the grip center to the turn center
E = Length, in axial direction of the wrench, from the wrench turn center to the extension turn center

T_E = Torque wrench setting when using an adapter

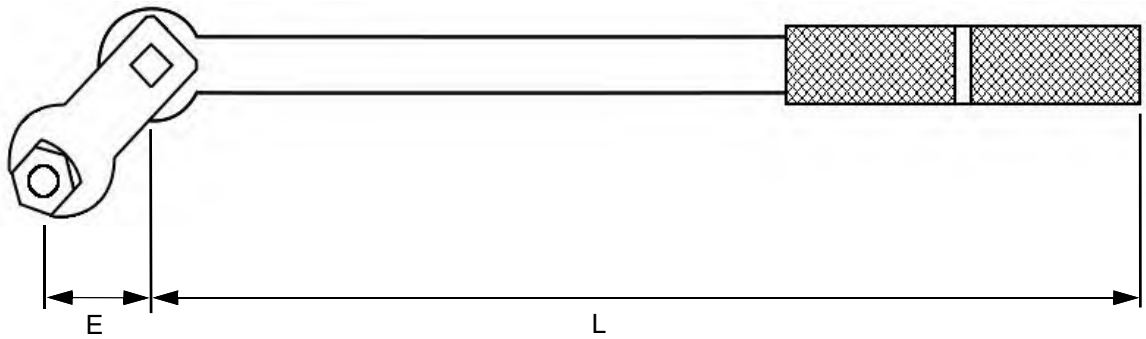

C. Torque Values for Metal and Composites

Note: Frictional drag has been accounted for in all values in this table. All values are suitable for torquing at the bolt head. Torque castellated nuts to minimum torque and increase torque as required, limited to max torque, in order to align the castellation to the drilled hole in the bolt.

Fine Threaded Fasteners					
Thread Size	**Nominal Diameter**	**Torque Limits for Installation**		**Maximum Allowable Torque Limits**	
Fine	Inches	Tension* (in-lbs.)	Shear** (in-lbs.)	Tension* (in-lbs.)	Shear** (in-lbs.)
2-64	.0860	1.8 - 2.2	1.1 - 1.3	2.8	1.7
4-48	.1120	3.6 - 4.4	2.2 - 2.6	5.3	3.2
6-40	.1380	7 - 9	4.2 - 5.4	9.9	5.9
8-36	.1640	12 - 15	7 - 9	20	12
10-32	.1900	20 - 25	12 - 15	40	25
1/4-28	.2500	50 - 70	30 - 40	100	60
5/16-24	.3125	100 - 140	60 - 85	225	140
3/8-24	.3750	160 - 190	95 - 110	390	240
7/16-20	.4375	450 - 500	270 - 300	840	500
1/2-20	.5000	480 - 690	290 - 410	1,100	660
9/16 - 18	.5625	800 - 1,000	480 - 600	1,600	960
5/8 - 18	.6250	1,100 - 1,300	600 - 780	2,400	1,400
3/4 16	.7500	2,300 - 2,500	1,300 - 1,500	5,000	3,000
7/8 - 14	.8750	2,500 - 3,000	1,500 - 1,800	7,000	4,200
1 - 14	1.00	3,700 - 5,500	2,200 - 3,300	10,000	6,000
1 1/8 - 12	1.1250	5,000 - 7,000	3,000 - 4,200	15,000	9,000
1 1/4 - 12	1.2500	9,000 - 11,000	5,400 - 6,600	25,000	15,000

Coarse Threaded Fasteners					
Thread Size	**Nominal Diameter**	**Torque Limits for Installation**		**Maximum Allowable Torque Limits**	
Coarse	Inches	Tension* (in-lbs.)	Shear** (in-lbs.)	Tension* (in-lbs.)	Shear** (in-lbs.)
2-56	.0860	1.8 - 2.2	1.1 - 1.3	2.8	1.7
4-40	.1120	3.6 - 4.4	2.2 - 2.6	5.3	3.2
6-32	.1380	7 - 9	4.2 - 5.4	9.9	5.9
8-32	.1640	12 - 15	7 - 9	20	12
10-24	.1900	20 - 25	12 - 15	35	21
1/4-20	.2500	40 - 50	25 - 30	75	45
5/16-18	.3125	80 - 90	48 - 55	160	100
3/8-16	.3750	160 - 185	95 - 100	275	170
7/16-14	.4375	235 - 255	140 - 155	475	280
1/2-13	.5000	400 - 480	240 - 290	880	520
9/16 - 12	.5625	500 - 700	300 - 420	1,100	650
5/8 - 11	.6250	700 - 900	420 - 540	1,500	900
3/4 - 10	.7500	1,150 - 1,600	700 - 950	2,500	1,500
7/8 - 9	.8750	2,200 - 3,000	1,300 - 1,800	4,600	2,700

***Nuts in Tension - Part Numbers:** AN256, AN310, AN315, AN363, AN365, MS14144, MS14156, MS14164, MS14182, MS17825, MS18725, MS20365, MS20500, MS21042, MS21043, MS21044, MS21045, MS21047-49, MS21051-56, MS21058-62, MS21069-76, MS21080, MS21084, MS21086, MS21133, MS21225. NAS509, NAS577, NAS679, NAS1021, NAS1023, NAS1031, NAS1033, NAS1067, NAS1291, NAS1473, NAS1474, NAS1758, NAS1766, NAS1770, NAS1771, NAS1772, NAS1773, NAS1778, NAS1791, NAS1792, NAS1793, NAS1804, NAS1805, NAS1870

** **Nuts in Shear - Part Numbers:** AN316, AN320, AN364, MS14145, MS17826, MS18726, MS20364, MS21025, MS21083, NAS1022, NAS1068, NAS1423, NAS1789

D. Torque Values for MS35842 Worm Drive Hose Clamps

Clamp Type	Torque Limits (in-lbs.)
MS35842-10 - MS35842-16	30-45

E. Torque Values for NAS1922 Worm Drive Clamps

Clamp Type	Initial Installation Torque (in-lbs.)	Max Torque (in-lbs.)
NAS1922-0050-1 - NAS1922-0525-1	18	35
NAS1922-0575-1 - NAS1922-1000-1	18	27
NAS1922-0050-3 - NAS1922-0525-3	18	35
NAS1922-0575-3 - NAS1922-1000-3	18	27

F. Torque Values for Marman V-Band Couplings

Part Number	Thread	Torque Limits (in-lbs)
4562-150	.250-28 UNJF-3A	31.5 - 38.5

G. Torque Values for Skurka Starter Generator Terminal Block Studs

Stud Thread Size	Nominal Diameter (in)	Torque (in-lbs)
10 - 32	.1900	20 - 25
3/8 - 24	.3750	160 - 190 (Single Wire on Terminal)
3/8 - 24	.3750	200 - 235 (Multiple Wires on Terminal)

H. Torque Values for CTSG-700 Ground Fault Transformer Studs

Stud Thread Size	Nominal Diameter (in)	Torque (in-lbs)
10 - 32	.1900	20 - 25

I. Torque Values for the 410-100-4 Alternator “B” Stud

“B” Stud Thread Size	Nominal Diameter (mm)	Torque (in-lbs)
M6 x 1	6	50

J. Torque Values for MS3506-1 28V Ground Power Receptacle Studs

Stud Thread Size	Nominal Diameter (in)	Installation Torque (in-lbs)	Max Torque (in-lbs)
10 - 32 UNF-2A	.1900	21 - 25	36
3/8 - 24 UNF-2A	.3750	101 - 117	168

K. Torque Values for MS27212 Terminal Board Studs

Part Number	Stud Thread Size	Nominal Diameter (in)	Installation Torque (in-lbs)	Max Torque (in-lbs)
MS27212-1	6 - 32 UNC-2A	.1380	10.3 - 13.1	18.7
MS27212-2	10 - 32 UNF-2A	.1900	20 - 25	34
MS27212-3	1/4 - 28 UNF-2A	.2500	50 - 70	127.5
MS27212-4	5/16 - 24 UNF-2A	.3125	100 - 140	144.5
MS27212-5	3/8 - 24 UNF-2A	.3750	100 - 140	144.5
MS27212-6	8 - 32 UNC-2A	.1640	12 - 15	27.2

L. Non-Structural Fastener Torque Values

The torque values listed are recommended fastener torques for non-structural applications such as but not limited to the attachment of clips, interior panels, interior trim, and flange mounted connectors. They are applicable for aluminum, brass, corrosion resistant steel, and steel fasteners in all non-structural applications.

Thread Size	Nominal Diameter (mm)	Torque (in-lbs)
2 - 56 / 64	.0860	0.5 - 1
4 - 40 / 48	.1120	1 - 2
6 - 32 / 40	.1380	2 - 6
8 - 32 / 36	.1640	4 - 6
10 - 24 / 32	.1900	6 - 8

M. Prevailing Torque Values for Locking Fasteners

Fine Threaded*			
Thread Size*	Nominal Diameter (in)	Minimum Prevailing Torque (in-lbs)	Maximum Prevailing Torque (in-lbs)
10 - 32	.1900	2	18
1/4 - 28	.2500	3.5	30
5/16 - 24	.3125	6.5	60
3/8 - 24	.3750	9.5	80
7/16 - 20	.4375	8	100
1/2 - 20	.5000	10	150
9/16 - 18	.5625	13	200
5/8 - 18	.6250	18	300
3/4 - 16	.7500	27	400
7/8 - 14	.8750	40	600
1 - 14	1.00	55	800
1-1/8 - 12	1.125	73	900
1-1/4 - 12	1.250	94	1000

*If a thread size for a specific locking fastener is not listed, that fastener should be discarded after initial use.

Coarse Threaded*			
Thread Size*	Nominal Diameter (in)	Minimum Prevailing Torque (in-lbs)	Maximum Prevailing Torque (in-lbs)
10 - 24	.1900	2	18
1/4 - 20	.2500	3.5	30
5/16 - 18	.3125	6.5	60
3/8 - 16	.3750	9.5	80
7/16 - 14	.4375	8	100
1/2 - 13	.5000	10	150
9/16 - 12	.5625	14	200
5/8 - 11	.6250	20	300
3/4 - 10	.7500	27	400
7/8 - 9	.8750	40	600
1 - 8	1.00	51	800
1-1/8 - 8	1.125	68	900
1-1/4 - 8	1.250	88	1000

*If a thread size for a specific locking fastener is not listed, that fastener should be discarded after initial use.

FLUID FITTINGS

1. Description

This chapter provides instructions and torque data for aircraft system fittings.

A. Fluid Fittings

Fluid fittings (hydraulic, fuel, pneumatic, and oxygen) must be torqued as instructed to prevent loosening and damage due to over tightening.

Prior to installation, all tubes, hoses and fittings must be inspected for damage, wear, and contamination. Sealing surfaces should be smooth and free of corrosion and damage.

The male threads of hydraulic, fuel and pneumatic fittings are to be lubricated with petrolatum or lubricant that conforms to MIL-PRF-83483.

The use of PTFE tape is only allowed on pipe fittings (NPT/NPTF). Tape must be wrapped in the direction of the thread spiral and be flush against the threads. The tape must never overhang the first thread.

CAUTION: Do not lubricate oxygen system fittings.

CAUTION: The B-Nut (AN818) must never be used to pull the tube to seat on the fitting or align the tube with the fitting.

CAUTION: Cap or plug all open lines and fittings to prevent contamination.

CAUTION: Always use a back up wrench to hold the fitting in a fixed position when tightening a B-Nut (AN818).

2. Maintenance Practices

A. Torque Data, Hydraulic, Fuel, and Pneumatic Lines

Torque values for aluminum alloy and steel tubing flared in accordance with SAE-AS4330 or SAE-A33583.

Note: Torque values are for lubricated threads.

Torque Values for AN818 Nut*			
Dash Number	Tubing OD	Aluminum-Alloy tubing. Torque (in-lbs)	Steel tubing. Torque (in-lbs)
-2	0.125	20-30	75-85
-3	0.188	25-35	95-105
-4	0.250	50-65	135-150
-5	0.313	70-90	170-200
-6	0.375	110-130	270-300
-8	0.500	230-260	450-500
-10	0.625	330-360	650-700
-12	0.750	460-500	900-1000
-16	1.000	500-700	1200-1400
-20	1.250	800-900	1520-1680
-24	1.500	800-900	1900-2100
-32	2.000	1800-2000	2660-2940

*When the hose fitting (nipple and nut) is aluminum, the min/max torque values for aluminum tubing shall apply. When the hose fitting (nipple and nut) is steel, the min/max torque values for steel tubing shall apply.

B. Torque Data, Oxygen Lines

Torque values for steel and aluminum alloy tubing, flared in accordance with SAE-A33583.

Note: Torque values are for dry threads.

Torque Values for AN818 Nut		
Dash Number	Tubing OD	Steel Tubing. Torque (in-lbs)
-4	0.250	135-150
-5	0.313	170-200
-6	0.375	270-300

Torque Values for AN818 Nut		
Dash Number	Tubing OD	Aluminum Alloy Tubing. Torque (in-lbs)
-4	0.250	50-65
-5	0.313	70-90
-6	0.375	110-160

C. NPT/NPTF Threads

NPT / NPTF Fitting Installation Tightness		
Thread Size (in)	Turns After Hand-Tight	Thread Engagement (Reference Only)
1/16” - 1’	1.5 - 3	3.5 - 6

D. Bulkhead Nuts

AS5178 / AN924 Bulkhead Fitting Nut Torque Values (All Materials)			
Size	Tube OD (in)	Thread	Torque (in-lbs)
-2	1/8	5/16 - 24	35 - 50
-3	3/16	3/8 -24	65 - 80
-4	1/4	7/16 - 20	85 - 105
-5	5/16	1/2 - 20	105 - 125
-6	3/8	9/16 - 18	120 - 150
-8	1/2	3/4 - 16	240 - 280
-10	5/8	7/8 - 14	320 - 380
-12	3/4	11/16 - 12	500 - 600
-16	1	1-5/16 - 12	720 - 880
-20	1-1/4	1-5/8 - 12	960 - 1200
-24	1-1/2	1-7/8 - 12	1200 - 1440
-32	2	2-1/2 - 12	1400 - 1500

E. Legris Fittings

Torque Values for Parker Legris LF 3000 Push-In Fittings		
Thread Identification Code	Thread Size	Torque (in-lbs)
11	1/8	64-78
14	1/4	96-117
18	3/8	239-292
22	1/2	279-341
20	10-32 UNF	10-13

Torque Values for Parker Legris LF 3000 Banjo Fittings		
Thread Identification Code	Thread Size	Torque (in-lbs)
11	1/8	32 - 39
14	1/4	40 - 49
18	3/8	48 - 58
22	1/2	58 - 68
20	10-32 UNF	10 - 13

F. SAE/ORB Fittings and Plugs

Torque Values for SAE / ORB Fittings and Plugs		
Size	Nominal Diameter (in)	Torque (ft-lbs)
-2	1/8	6 - 7
-3	3/16	8 - 9
-4	1/4	14 - 16
-6	3/8	24 - 26
-8	1/2	37 - 44
-10	5/8	50 - 60
-12	3/4	75 - 83
-16	1	111 - 125

CHAPTER 21

Environmental Systems

This Page Intentionally Left Blank

List of Effective Pages

Chapter/Section	Page Number	Effective Date
21-Title	Page 1	02 Jan 2020
21-Title	Page 2	02 Jan 2020
21-LOEP	Page 1	10 Jul 2025
21-LOEP	Page 2	10 Jul 2025
21-LOEP	Page 3	16 May 2022
21-LOEP	Page 4	13 Apr 2020
21-TOC	Page 1	14 Jul 2021
21-TOC	Page 2	10 Jul 2025
21-00	Page 1	10 Jul 2025
21-00	Page 2	13 Apr 2020
21-00	Page 3	02 Jan 2020
21-00	Page 4	02 Jan 2020
21-00	Page 5	02 Jan 2020
21-00	Page 6	02 Jan 2020
21-00	Page 7	02 Jan 2020
21-00	Page 8	02 Jan 2020
21-00	Page 9	02 Jan 2020
21-00	Page 10	02 Jan 2020
21-20	Page 1	11 Nov 2020
21-20	Page 2	11 Nov 2020
21-20	Page 3	11 Nov 2020
21-20	Page 4	11 Nov 2020
21-20	Page 5	11 Nov 2020
21-20	Page 6	11 Nov 2020
21-20	Page 7	11 Nov 2020
21-20	Page 8	11 Nov 2020
21-20	Page 9	11 Nov 2020
21-20	Page 10	11 Nov 2020
21-20	Page 11	11 Nov 2020
21-20	Page 12	11 Nov 2020
21-20	Page 13	11 Nov 2020
21-20	Page 14	11 Nov 2020
21-20	Page 15	11 Nov 2020
21-20	Page 16	02 Jan 2020
21-20	Page 17	02 Jan 2020
21-20	Page 18	02 Jan 2020
21-20	Page 19	14 Jul 2021
21-20	Page 20	14 Jul 2021
21-20	Page 21	14 Jul 2021
21-20	Page 22	10 Jul 2025

21-20 ..... Page 23 ..... 10 Jul 2025
21-20 ..... Page 24 ..... 10 Jul 2025
21-20 ..... Page 25 ..... 10 Jul 2025
21-20 ..... Page 26 ..... 10 Jul 2025
21-20 ..... Page 27 ..... 10 Jul 2025
21-20 ..... Page 28 ..... 10 Jul 2025
21-20 ..... Page 29 ..... 10 Jul 2025
21-20 ..... Page 30 ..... 10 Jul 2025
21-20 ..... Page 31 ..... 10 Jul 2025
21-20 ..... Page 32 ..... 10 Jul 2025
21-20 ..... Page 33 ..... 10 Jul 2025
21-20 ..... Page 34 ..... 10 Jul 2025
21-20 ..... Page 35 ..... 10 Jul 2025
21-20 ..... Page 36 ..... 10 Jul 2025
21-20 ..... Page 37 ..... 10 Jul 2025
21-20 ..... Page 38 ..... 10 Jul 2025
21-20 ..... Page 39 ..... 10 Jul 2025
21-20 ..... Page 40 ..... 10 Jul 2025
21-20 ..... Page 41 ..... 10 Jul 2025
21-20 ..... Page 42 ..... 10 Jul 2025
21-20 ..... Page 43 ..... 10 Jul 2025
21-20 ..... Page 44 ..... 10 Jul 2025

21-30 ..... Page 1 ..... 10 Jul 2025
21-30 ..... Page 2 ..... 10 Jul 2025
21-30 ..... Page 3 ..... 10 Jul 2025
21-30 ..... Page 4 ..... 10 Jul 2025
21-30 ..... Page 5 ..... 10 Jul 2025
21-30 ..... Page 6 ..... 10 Jul 2025
21-30 ..... Page 7 ..... 10 Jul 2025
21-30 ..... Page 8 ..... 10 Jul 2025
21-30 ..... Page 9 ..... 10 Jul 2025
21-30 ..... Page 10 ..... 10 Jul 2025
21-30 ..... Page 11 ..... 10 Jul 2025
21-30 ..... Page 12 ..... 10 Jul 2025
21-30 ..... Page 13 ..... 10 Jul 2025
21-30 ..... Page 14 ..... 10 Jul 2025
21-30 ..... Page 15 ..... 10 Jul 2025
21-30 ..... Page 16 ..... 10 Jul 2025
21-30 ..... Page 17 ..... 10 Jul 2025
21-30 ..... Page 18 ..... 10 Jul 2025
21-30 ..... Page 19 ..... 10 Jul 2025
21-30 ..... Page 20 ..... 10 Jul 2025
21-30 ..... Page 21 ..... 10 Jul 2025
21-30 ..... Page 22 ..... 10 Jul 2025
21-30 ..... Page 23 ..... 10 Jul 2025
21-30 ..... Page 24 ..... 10 Jul 2025

21-30 ..... Page 25 ..... 10 Jul 2025
21-30 ..... Page 26 ..... 10 Jul 2025
21-30 ..... Page 27 ..... 10 Jul 2025
21-30 ..... Page 28 ..... 10 Jul 2025
21-30 ..... Page 29 ..... 10 Jul 2025
21-30 ..... Page 30 ..... 10 Jul 2025
21-30 ..... Page 31 ..... 10 Jul 2025

21-50 ..... Page 1 ..... 16 May 2022
21-50 ..... Page 2 ..... 16 May 2022
21-50 ..... Page 3 ..... 16 May 2022
21-50 ..... Page 4 ..... 16 May 2022
21-50 ..... Page 5 ..... 16 May 2022
21-50 ..... Page 6 ..... 16 May 2022
21-50 ..... Page 7 ..... 16 May 2022
21-50 ..... Page 8 ..... 16 May 2022
21-50 ..... Page 9 ..... 16 May 2022
21-50 ..... Page 10 ..... 16 May 2022

21-60 ..... Page 1 ..... 02 Jan 2020
21-60 ..... Page 2 ..... 02 Jan 2020

This Page Intentionally Left Blank

Table of Contents

List of Effective Pages ..... 21-LOEP / Page 1
Table of Contents ..... 21-TOC / Page1

Paragraph **Page Number**

Environmental Systems

1. General ..... 21-00 / Page 1
   - A. Bleed Air Inflow System ..... 21-00 / Page 1
   - B. Cabin Pressurization Control System (CPCS) ..... 21-00 / Page 2
   - C. Fresh Air System ..... 21-00 / Page 3
   - D. Door Seal ..... 21-00 / Page 3
   - E. Vapor Cycle Air Conditioning (VCS) ..... 21-00 / Page 4
   - F. ECS Controls ..... 21-00 / Page 4
2. Troubleshooting ..... 21-00 / Page 8

Distribution

1. Description ..... 21-20 / Page 1
2. Maintenance Practices ..... 21-20 / Page 1
   - A. Environmental Control System (ECS) Distribution - Firewall Forward ..... 21-20 / Page 1
   - B. Air Conditioning Distribution - Firewall Forward ..... 21-20 / Page 3
   - C. Cabin Air Conditioning Ducting ..... 21-20 / Page 16
   - D. Crew Air Conditioning Ducting (SN: K003 - K010) ..... 21-20 / Page 19
   - E. Crew Air Conditioning Ducting (SN: K011 - K085)* ..... 21-20 / Page 22
   - F. Crew Air Conditioning Ducting (SN: K086 and On) ..... 21-20 / Page 25
   - G. Air Gasper Valve ..... 21-20 / Page 28
   - H. Heat Distribution ..... 21-20 / Page 30
   - I. Heat Distribution Ducting ..... 21-20 / Page 30
   - J. Temperature Controller ..... 21-20 / Page 42
   - K. Intercooler Leak Check ..... 21-20 / Page 44

Pressurization Control

1. Description ..... 21-30 / Page 1
2. Maintenance Practices ..... 21-30 / Page 1
   - A. Pressure Bulkhead Access Panel ..... 21-30 / Page 1
   - B. Tubing ..... 21-30 / Page 6
   - C. Outflow Valve(s) - Valve Housing Only ..... 21-30 / Page 6
   - D. Outflow Valve(s) - Entire Assembly ..... 21-30 / Page 7
   - E. Outflow Valve Controller ..... 21-30 / Page 9
   - F. Mass Flow Valve ..... 21-30 / Page 14
   - G. Mass Flow Sensor Controller ..... 21-30 / Page 16
   - H. Mass Flow Controller ..... 21-30 / Page 18
   - I. Cabin Altitude Pressure Switch ..... 21-30 / Page 20
   - J. Emergency Pressurization Airflow Test ..... 21-30 / Page 23
   - K. Ground Fresh Air Fan Test ..... 21-30 / Page 25

L. Windshield Defrost Test ..... 21-30 / Page 25
M. Passive Door Seal Inspection ..... 21-30 / Page 25
N. Cabin Pressurization Test ..... 21-30 / Page 25
O. ECS System Functional Check ..... 21-30 / Page 29
P. Troubleshooting ..... 21-30 / Page 31

Cooling

1. Description ..... 21-50 / Page 1
2. Maintenance Practices ..... 21-50 / Page 1
A. Compressor Condenser Module ..... 21-50 / Page 1
B. Evaporator Module(s) ..... 21-50 / Page 3
C. Air Conditioning System Test ..... 21-50 / Page 10

Temperature Control

1. Description ..... 21-60 / Page 1
2. Maintenance Practices ..... 21-60 / Page 1
A. Air Conditioning Control Panel ..... 21-60 / Page 1

ENVIRONMENTAL SYSTEMS

1. General

Heating, cooling, fresh air, and pressurization systems in this airplane are for the safety and comfort of the crew and passengers.

Heating of the cabin is done by ducting in cooled bleed air from the engine. Ambient air is mixed with the bleed air in an air-to-air heat exchanger to cool it. The amount of conditioned bleed air let into the airplane cabin is controlled by the crew of the airplane. This system also provides the air supply for cabin pressurization and for ventilation when the airplane is on the ground or for unpressurized flight.

The airplane cabin is cooled using a condenser, evaporator, and electrically driven compressor. The blower and evaporator are under the aft passenger seats. The compressor and condenser are aft of the pressure bulkhead and are accessible through the pressure bulkhead access panel.

The cabin pressurization system has two outflow valves, a mass flow valve, an altitude and rate selector, a vacuum solenoid valve, a surge tank, plumbing, and wiring. The two outflow valves are mounted with the controller on the pressure bulkhead access panel behind the aft passenger seats.

Left and right side panel ducts, overhead panel ducts, a windshield defrost outlet, individual seat outlets, and the various system controls are used to distribute conditioned air throughout the cabin.

K003-K085 (excluding K014), refer to the current revision of the E1000 Wiring Manual, P/N SK05000002.

K014, K086 and on, refer to the current revision of the E1000 Wiring Manual, P/N SK05003002.

A. Bleed Air Inflow System

The primary bleed air circuit first passes through a stainless steel ram air cooled “pre-cooler” heat exchanger. The air then passes through a high pressure/temperature bleed air shutoff valve. Downstream of the shutoff valve is a Mass Flow Control Valve/Jet Pump which takes hot high pressure bleed air and induces ambient air flow by a Venturi function. The jet pump gets information from a mass flow controller through a hot wire anemometer mass flow sensor and adjusts bleed airflow accordingly. There are different flow settings for ground, normal flow, and high flow (heating). The ambient air induction helps to reduce the temperature of the bleed discharge air during lower altitude operation. At high altitude (approximately 18000 MSL and above), the ambient air pressure is too low to mix with the bleed air and the cooling is done with the bleed air heat exchangers. The Jet Pump Valve is configured for 4 settings (OFF, LOW, NORMAL, and HIGH) flow (0, 1.5, 5 and 8 lb/min respectively).

(1) Bleed Air Temperature Control/Heating
Downstream of the bleed air jet pump, air is either directed through the 2nd stage heat

exchanger or bypassed, depending on the position of the Temperature Control Valve (TCV). The system controller sets the position of the TCV based on a combination of the downstream duct temperature sensor input and the cabin temperature sensor inputs. In addition, the duct over-temperature sensor contains a switching function that will tell the crew of a duct over-temperature situation, automatically forcing the TCV into the "full cold" setting (bleed air routed entirely through the heat exchanger).

(2) Emergency Pressurization Inflow Circuit
A secondary bleed air inflow circuit is available in an emergency. The emergency circuit is isolated from the primary circuit by a bleed air shutoff valve and unidirectional stainless steel check valves. The circuit adds a level of redundancy to the inflow system in a bleed air valve failure in the primary circuit. The system is selectable manually by the crew.

B. Cabin Pressurization Control System (CPCS)

The cabin pressurization system has a controller and two outflow valves. This system does not require a bleed air reference line. The system is integrated with the avionics package via ARINC 429 and requires no pilot interaction such as entering the landing field elevation, as this function is automatic. The system contains mechanical functions to maintain lower than a 15000 ft MSL cabin altitude in the event of any probable system failures and does not depend on software to maintain a safe cabin altitude. The maximum cabin differential pressure is 6.6 PSID, which corresponds to approximately a 9,700 ft. cabin altitude at the maximum operating altitude of 34,000 ft. MSL. The system also contains a mechanical maximum cabin pressure differential relief valve set at 6.8 PSID. The outflow valves incorporates mechanical functions to prevent a negative cabin pressure differential. The software only controls the "Minor" system level functions, including the cabin pressure rate of change.

(1) CPCS Aircraft Interface, Displays, and Warnings
The electronic aircraft interface provides for an interface to the FMS, flight warning system, serial I/O, and aircraft discrete signals. The FMS interface supplies an ARINC 429 interface so that the pressurization system can communicate with the aircraft flight management system. The information exchanged with the FMS lets the pressurization system controller correctly implement the Autoschedule algorithm. The aircraft discrete signals let the controller determine the identity of the present aircraft application and the present state of the aircraft, such as, on the ground, takeoff, etc. This information is used by the control logic to correctly implement the Autoschedule algorithm. The BIT routines of the control logic give several warning signals that the aircraft may display on the flight warning system. The serial I/O gives access to controller operational data that is useful for cabin pressurization system maintenance. The pressurization system gives several ARINC outputs to the E1000 avionics suite:

CPCS ARINC Outputs

Label	Parameter
127	Selected Landing Altitude (at 29.92 inHg baro)
150	Cabin Altitude Rate
151	Cabin Altitude
152	Cabin Differential Pressure
203	Altitude (At 29.92 inHg baro)
204	Corrected Altitude
206	Computed Airspeed
235	Baro Correction (inHg) #1
270	Discrete Switch Information
301	Calculated A/C Altitude (at 29.92 in Hg baro) (Using Internal Transducers)
302	Software Part Number

(2) High Altitude Warning Signal
The High Altitude Warning signal is a warning to the airplane that the controller is commanding the cabin to a higher altitude than the maximum cabin cruise altitude because of a High Altitude Take Off (HATO) or High Altitude Landing (HAL) condition. The High Altitude Warning signal is intended for use in suppressing the cockpit High Altitude warnings while the airplane is engaged in high altitude landing and takeoff operations.

C. Fresh Air System

As shown in the system schematic, a fresh air circuit is available during unpressurized operations and ground/taxi phase. In addition, this circuit will help with smoke clearing operations if there is an emergency resulting in smoke in the cabin. The fresh air circuit is isolated with a check valve.

D. Door Seal

Bleed air is used to inflate the door seal. Bleed air is taken off of the same circuit as the de-ice boots and passed through a pressure regulator which is on the aft side of the firewall. The door seal is operated by the pilot using an electrically actuated solenoid valve. The door has a built in vent valve that deflates the door seal when the door latch is operated. This permits opening of the door from either inside or outside the airplane in an emergency.

E. Vapor Cycle Air Conditioning (VCS)

The vapor cycle air-conditioning system uses refrigerant R134a to cool the airplane cabin. The major components of the air conditioning system are a receiver/dryer, expansion valve, evaporators, and compressor condenser module. The compressor and condenser fan on the air-conditioning system is driven by a single electric motor. The fan pulls air from the tail-cone area over the compressor assembly (for motor cooling) and then through the condenser coil where it is sent overboard. If the generator fails, the VCS will be automatically disabled.

The receiver/drier stores liquid refrigerant under pressure. The drier portion of the assembly removes any traces of moisture that may have accumulated in the system. Liquid refrigerant flows from the receiver drier through the expansion valve where the refrigerant pressure is reduced, letting it spray into the evaporator. At the same time, a blower driven by an electric motor passes air over the evaporator. This air is cooled since heat is removed from the air by the evaporation of the refrigerant in the evaporator. The evaporator produces water due to condensation which drains overboard through a line attached to the evaporator condensate drain. The evaporators contain a “freeze switch” that will cut system power to prevent freezing water in the evaporator coil.

The refrigerant leaves the evaporator as a gas. The compressor, raising its pressure and temperature, pumps this gas. This high temperature gas then flows to the condenser. Cooling air, driven by another electric blower motor, passes over the condenser, cooling and therefore condensing the refrigerant to a liquid. The liquid refrigerant then enters the receiver/drier, repeating the process.

The plumbing, which connects the compressor, condenser and the evaporators, is rubber-based hoses with a nylon barrier. Fittings are either "o-ring" type or use flared connections. Sealant is used on the fitting mating surfaces to prevent refrigerant leaks. The two R134a service valves are sized differently to avoid incorrect cross connecting when gaining access to the plumbing for system recharging. The system has a “binary pressure switch” that will cut power to the compressor module if there is a system overpressure.

F. ECS Controls

The ECS is controlled by the climate control panel and by switches in a panel within easy reach of the pilot.

The climate control panel has a three position fan control switch (OFF, LOW, and HIGH), a temperature rheostat, and “AIR COND ON”, “DEFROST ON”, and “GROUND FRESH AIR” switches.

The switch panel has the “PRESS AIR ON” switch which powers the bleed air inflow system and CPCS controller, the “HI PRESS ON” switch which engages the higher 8 lb/min mass flow from the jet pump flow control valve, the “EMERG PRESS ON” switch which opens the emergency pressurization shutoff valve, and the “DUMP VALVE ON” switch which engages the emergency dump function of the outflow valves.

Figure 21-00.1: Environmental Control System

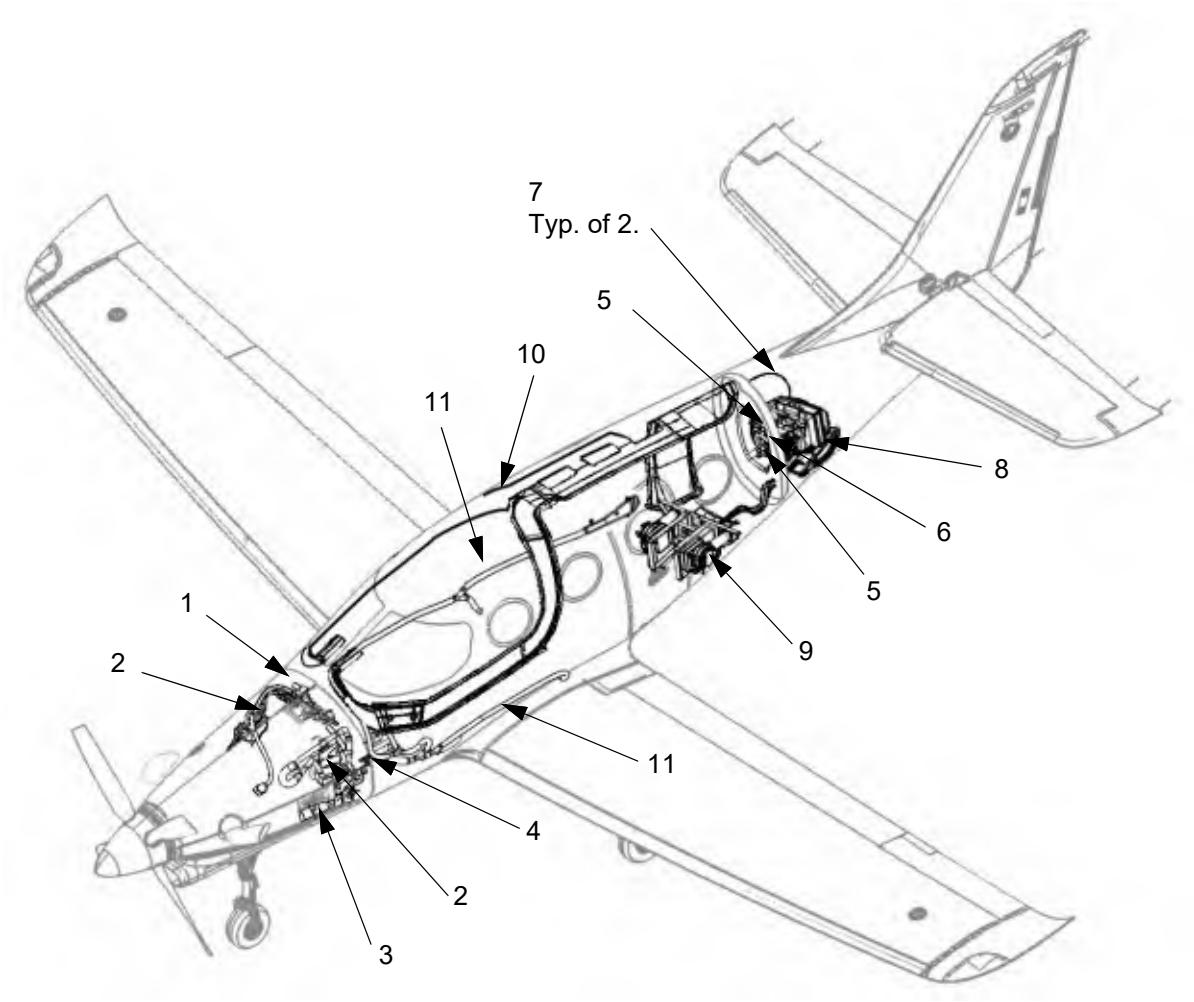

LEGEND

1. Mass Flow Valve
2. Intercooler
3. Fresh Air Fan
4. Pressure Circulation Manifold
5. Outflow Valve
6. Pressurization Controller
7. Pitot Static Port
8. Compressor Module
9. Evaporator Module
10. Cold Air Ducting
11. Hot Air Ducting

Figure 21-00.2: ECS Schematic (Sheet 1 of 2)

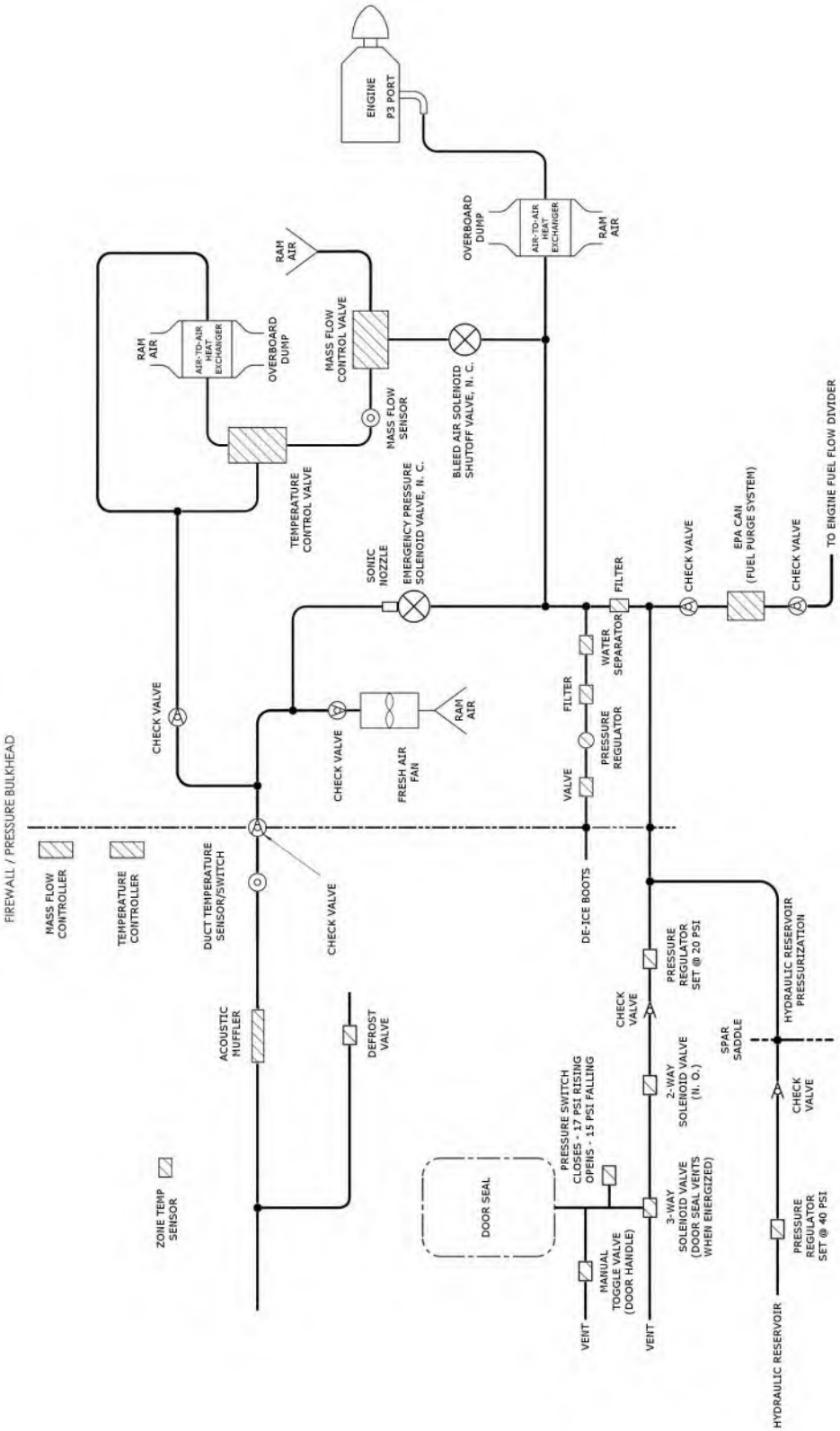

Figure 21-00.2: ECS Schematic (Sheet 2 of 2)

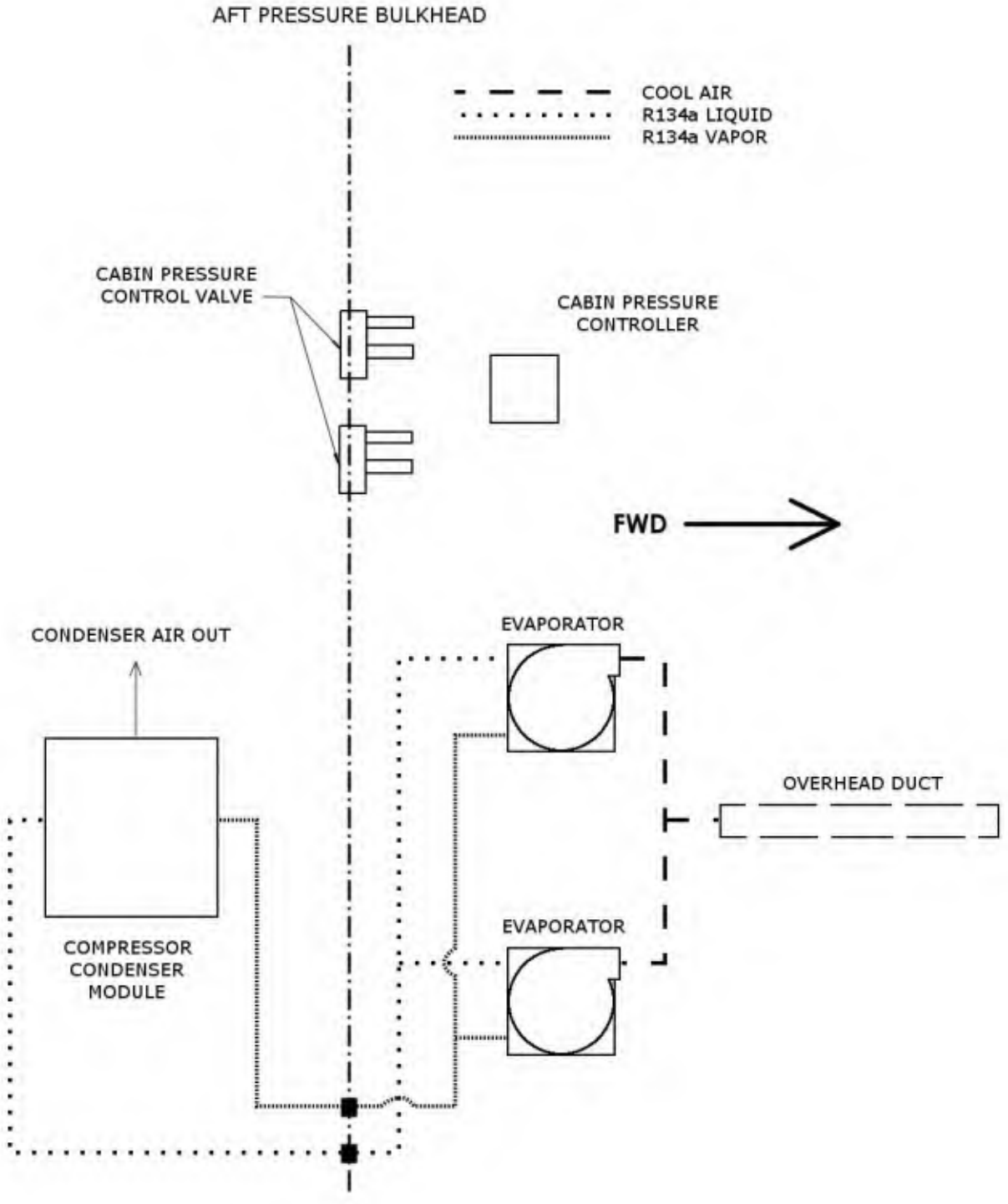

2. Troubleshooting

(1) Pressurization System - Refer to the latest revisions of the Kollsman KAPS II Operation and Description Manual S2119 and the Enviro Systems, Inc., Air Management System, System Description and Operation Manual with Illustrated Parts List for the E1000, document # 21-00-45.

(2) Air Conditioning System - Refer to the latest revision of the Enviro Systems, Inc., Air Management System, System Description and Operation Manual with Illustrated Parts List for the E1000, Document # 21-00-45 and the following table.

Problem	Probable Cause	Solution
No cold air on the ground.	Ground power not connected and energized.	Connect ground power.
	AIR COND CTRL circuit breaker tripped/pulled.	Reset circuit breaker.
	CABIN TEMP circuit breaker tripped/pulled.	Reset circuit breaker.
	Condenser malfunction.	Clean and tighten the electrical connections.
		Repair or replace the condenser.
	Evaporator fan malfunction.	Clean and tighten the electrical connections.
		Repair or replace the evaporator fan.
	Vents closed.	Open vents.

Problem	Probable Cause	Solution
No cold air in flight.	AIR COND CTRL circuit breaker tripped/pulled.	Reset circuit breaker.
	CABIN TEMP circuit breaker tripped/pulled.	Reset circuit breaker.
	Condenser malfunction.	Clean and tighten the electrical connections.
		Repair or replace the condenser.
	Evaporator fan malfunction.	Clean and tighten the electrical connections.
		Repair or replace the evaporator fan.
	Vents closed.	Open vents.
No fresh air on the ground.	FRESH AIR CTRL circuit breaker tripped/pulled.	Reset circuit breaker.
	FRESH AIR circuit breaker tripped/pulled.	Reset circuit breaker.
No heat on the ground.	Engine not running.	Start engine.
No heat in flight.	AIR COND CTRL circuit breaker tripped/pulled.	Reset circuit breaker.
	CABIN TEMP circuit breaker tripped/pulled.	Reset circuit breaker.
	Duct temperature sensor/ switch malfunction.	Repair or replace the sensor/ switch.
	Temperature control valve malfunction.	Repair or replace the temperature control valve.
	Vents closed.	Open vents.

This Page Intentionally Left Blank

DISTRIBUTION

1. Description

Distribution of the conditioned air from the engine bleed air heat conditioning system, pressurization and control system, ventilation air system, and vapor cycle air conditioning system is done using hoses, tubing, intercoolers, fans, and air flow valves.

The cabin air distribution system consists of left and right side panel ducting, windshield defrost, and recirculation blowers. The overhead panel ducts give overall air distribution throughout the length of the cabin as well as individual controllable air outlets at each seat (eyeball outlets or gaspers). The defrost control will let part of the bleed air be diverted to the windshield defrost outlet. The recirculation blowers supply airflow to the portion of the overhead ducts containing the individual seat outlets.

2. Maintenance Practices

A. Environmental Control System (ECS) Distribution - Firewall Forward

(1) Removal

(a) Remove the cowling (refer to Chapter 71-10).

(b) Loosen the hose clamps securing the ambient air in to mass flow valve hose, intercooler to flow control valve hose, and ambient air to flow control valve hose to the engine mount.

(c) Disconnect each end of the ambient air in to mass flow valve hose, intercooler to flow control valve hose, and ambient air to flow control valve hose.

(d) Remove the bolts, washers, locknuts, and cable clamps attaching the ECS manifold to the ECS bracket then remove it from the airplane.

(2) Installation

(a) Attach the ECS manifold to the ECS bracket using bolts, washers, and locknuts.

(b) Connect each end of the ambient air in to mass flow valve hose, intercooler to flow control valve hose, and ambient air to flow control valve hose.

(c) Install the hose clamps attaching each hose to the engine mount.

(d) Install the cowling (refer to Chapter 71-10).

Figure 21-20.1: ECS Distribution

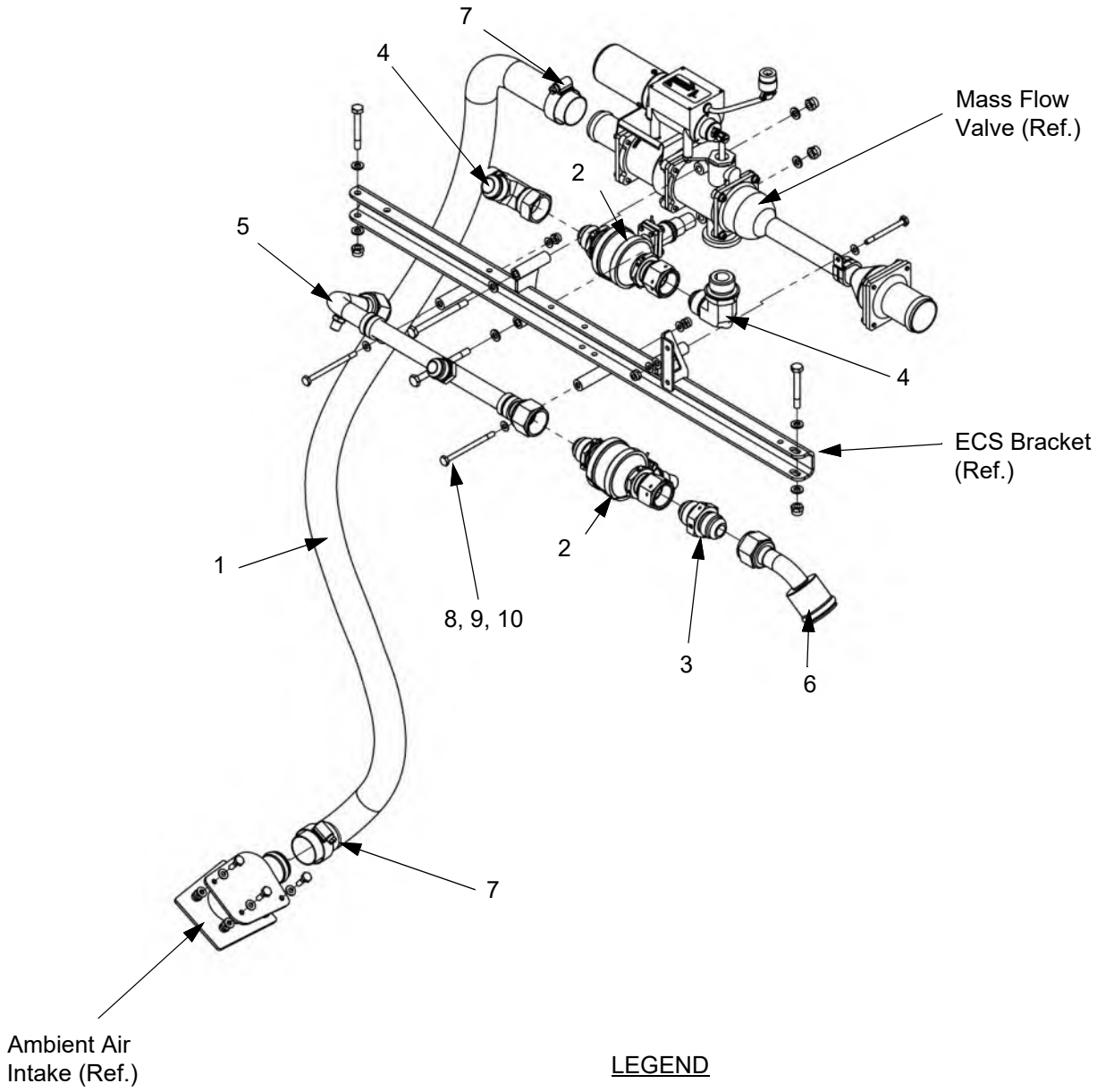

LEGEND

1. Ambient Air In to Mass Flow Valve Hose
2. Solenoid Shutoff Valve
3. Sonic Nozzle
4. 90° Fitting
5. ECS Manifold
6. Hose Adapter Fitting
7. Hose Clamp
8. Bolt
9. Washer
10. Locknut

B. Air Conditioning Distribution - Firewall Forward

(1) Removal

(a) Remove the cowling (refer to Chapter 71-10).

(b) Loosen the hose clamps securing the hoses connected to the intercoolers.

(c) Disconnect the ambient air to flow control valve hose from the pressure circulation manifold.

(d) Disconnect the hose on the inside of the cockpit from the pressure circulation manifold.

(e) Disconnect the wiring harness from the duct temperature sensor/switch.

(f) Remove the hose connecting the fresh air fan to the pressure circulation manifold.

(g) Remove the firewall blanket plate (refer to Chapter 71-30).

(h) Remove the hose connecting the pressure circulation manifold to the tee to the temperature control valve.

(i) Remove the hose connecting the tee to the temperature control valve to the left intercooler.

(j) Remove the left intercooler.

(k) Remove the right intercooler.

(l) Disconnect the electrical harness from the fresh air fan then remove the fresh air fan.

(m) Remove the six bolts, washers, and locknuts attaching the pressure circulation manifold to the manifold flange on the opposite side of the firewall then remove the pressure circulation manifold.

(2) Installation

Note: Torque all hose clamps 25-30 in-lbs.

Note: Install the pressure circulation manifold, manifold coupler, and all bolts, washers, and nuts passing through the firewall using PPG Aerospace PR-1995 Fire Sealant Paste. Clean surfaces using iso-propyl alcohol before application of PR-1995. Do not allow the sealant to restrict airflow through the valve. Verify sealant squeeze out around the perimeter of hardware and fittings on the forward and aft sides of the firewall and remove excess sealant to ensure adequate clearance for tool access.

(a) Install the fresh air fan.

(b) Install the pressure circulation manifold.

(c) Install the right intercooler.

(d) Install the left intercooler.

(e) Install the hose connecting the pressure circulation manifold to the tee to the temperature control valve.

(f) Install the hose connecting the tee to the temperature control valve to the left intercooler.

(g) Install the hose connecting the fresh air fan to the pressure circulation manifold.

(h) Connect the ambient air to flow control valve hose to the pressure circulation manifold.

(i) Install the firewall blanket plate (refer to Chapter 71-30).

(j) Connect the wiring harness to the fresh air fan and to the duct temperature sensor/switch.

(k) Install the cowling (refer to Chapter 71-10).

Figure 21-20.2: Air Conditioning Distribution (Sheet 1 of 11)

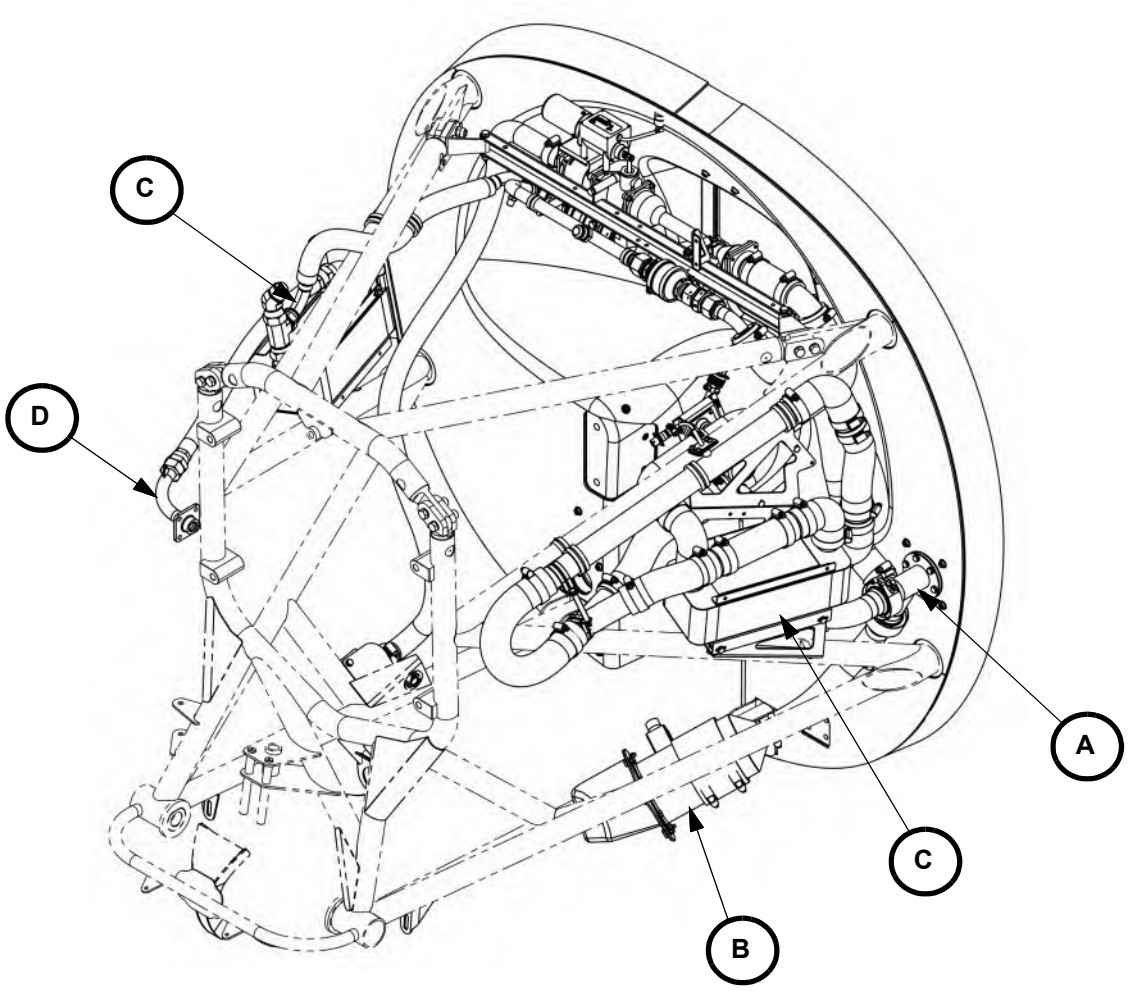

Figure 21-20.2: Air Conditioning Distribution (Sheet 2 of 11)

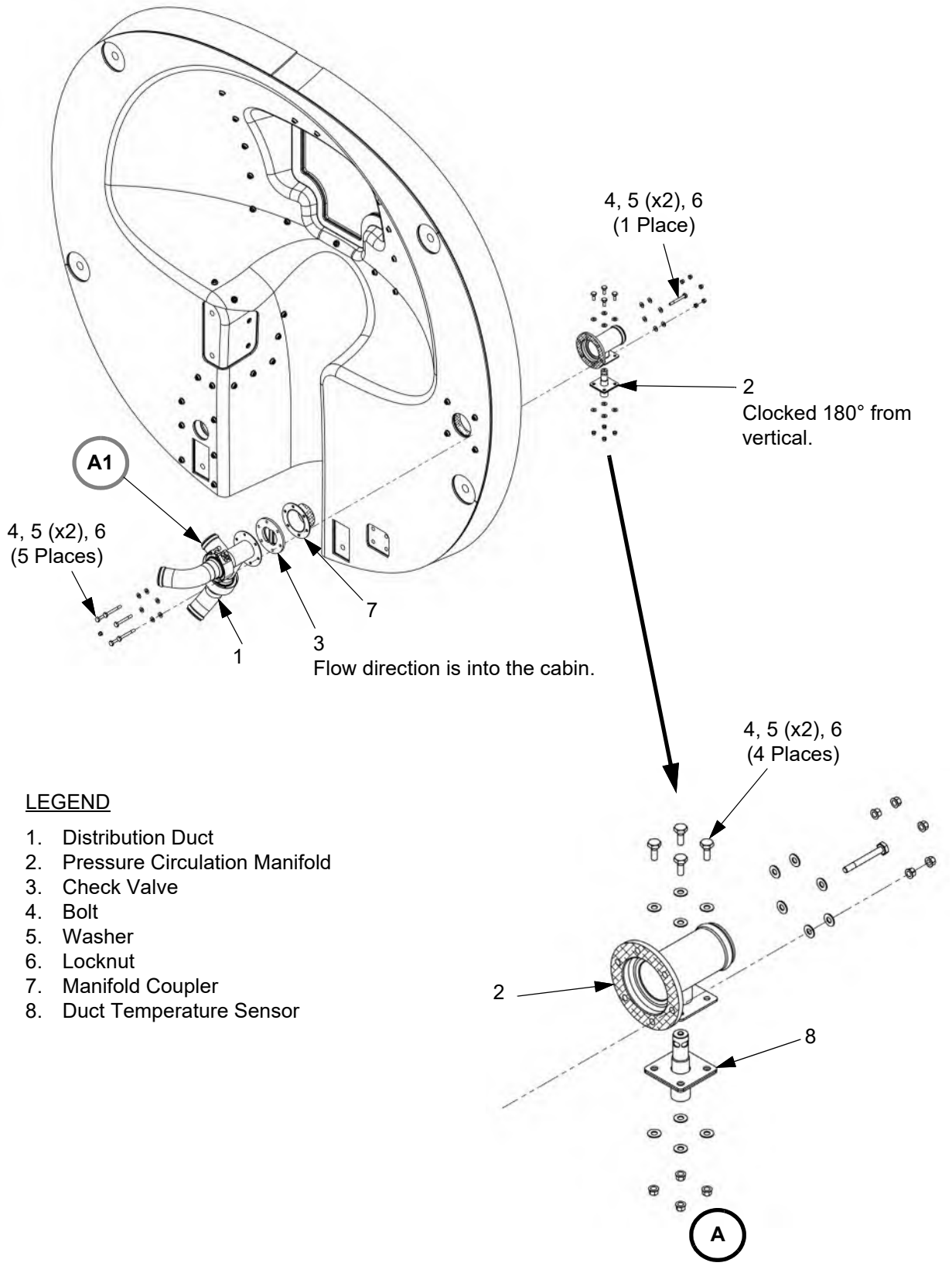

LEGEND

1. Distribution Duct
2. Pressure Circulation Manifold
3. Check Valve
4. Bolt
5. Washer
6. Locknut
7. Manifold Coupler
8. Duct Temperature Sensor

Figure 21-20.2: Air Conditioning Distribution (Sheet 3 of 11)

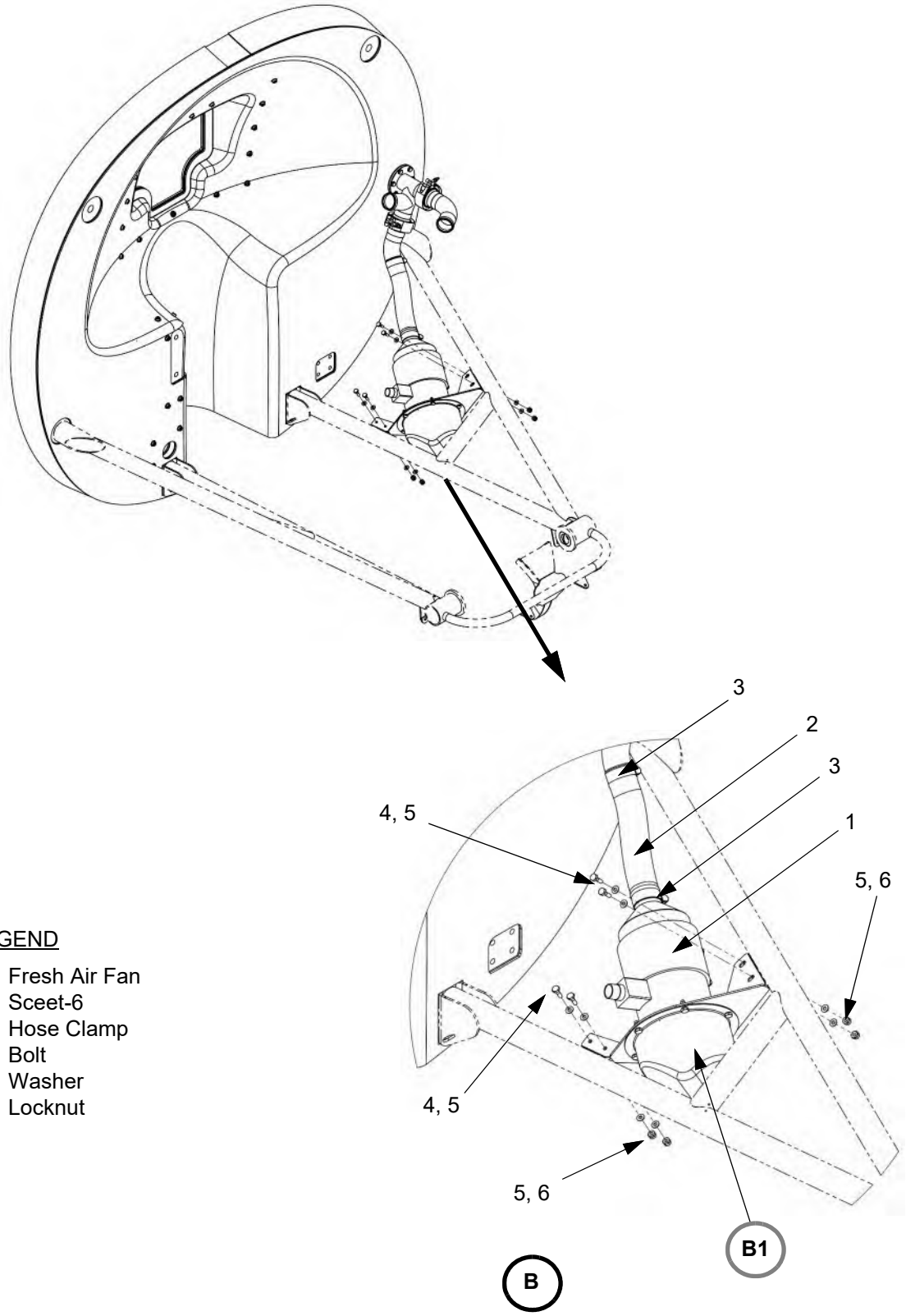

LEGEND

1. Fresh Air Fan
2. Sceet-6
3. Hose Clamp
4. Bolt
5. Washer
6. Locknut

Figure 21-20.2: Air Conditioning Distribution (Sheet 4 of 11)

LEGEND

1. Pressure Circulation Manifold
2. Check Valve
3. Marman Clamp
4. Tube
5. Sceet-6
6. Hose Clamp
7. Reducer
8. Hose
9. Fresh Air Fan
10. Bracket
11. Plenum
12. Bolt
13. Washer
14. Locknut

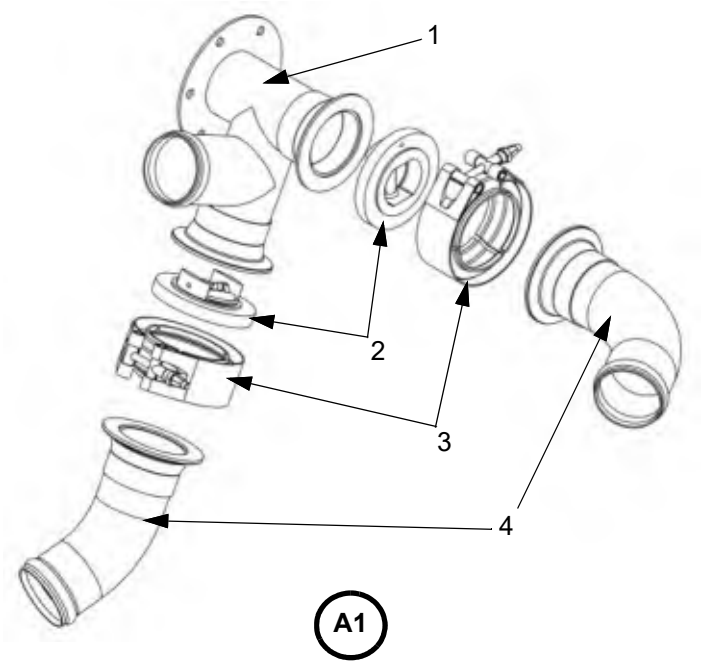

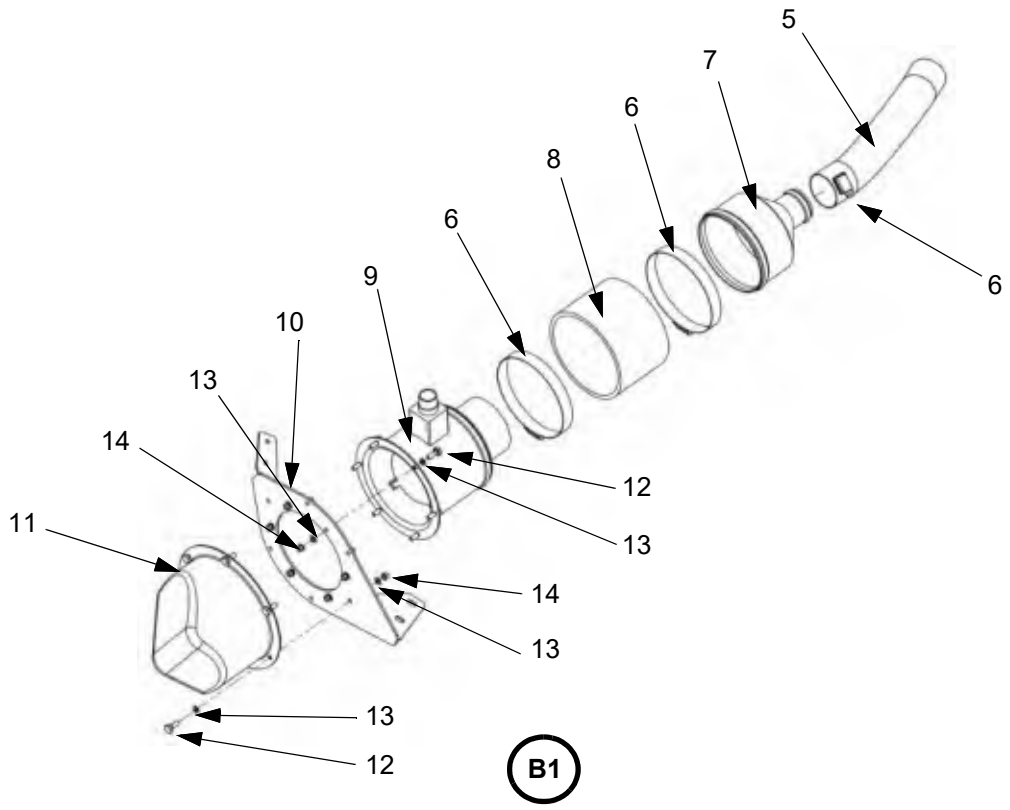

Figure 21-20.2: Air Conditioning Distribution (Sheet 5 of 11)

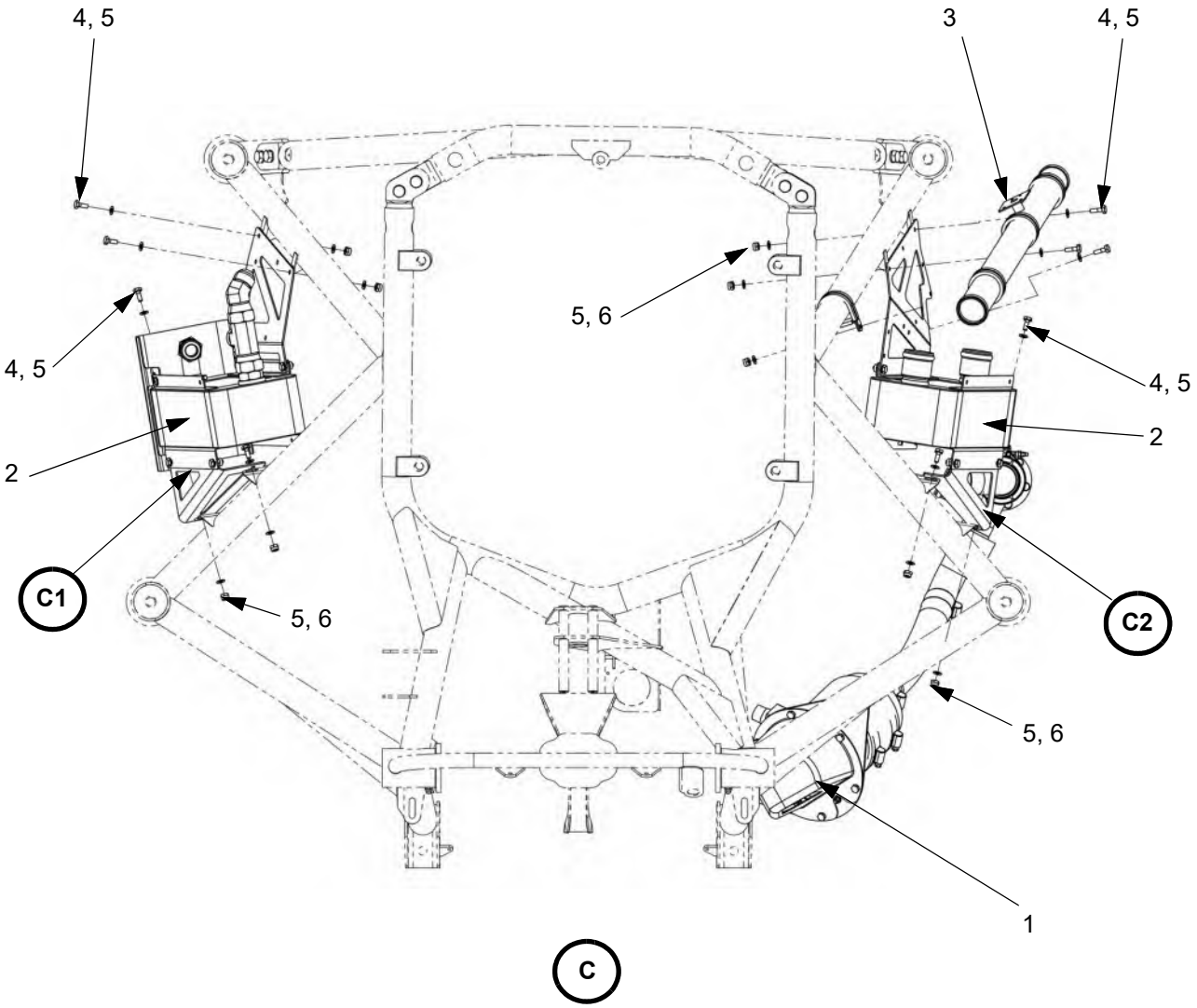

LEGEND

1. Fresh Air Fan
2. Intercooler
3. MAF Sensor Mount Tube
4. Bolt
5. Washer
6. Locknut

Figure 21-20.2: Air Conditioning Distribution (Sheet 6 of 11)

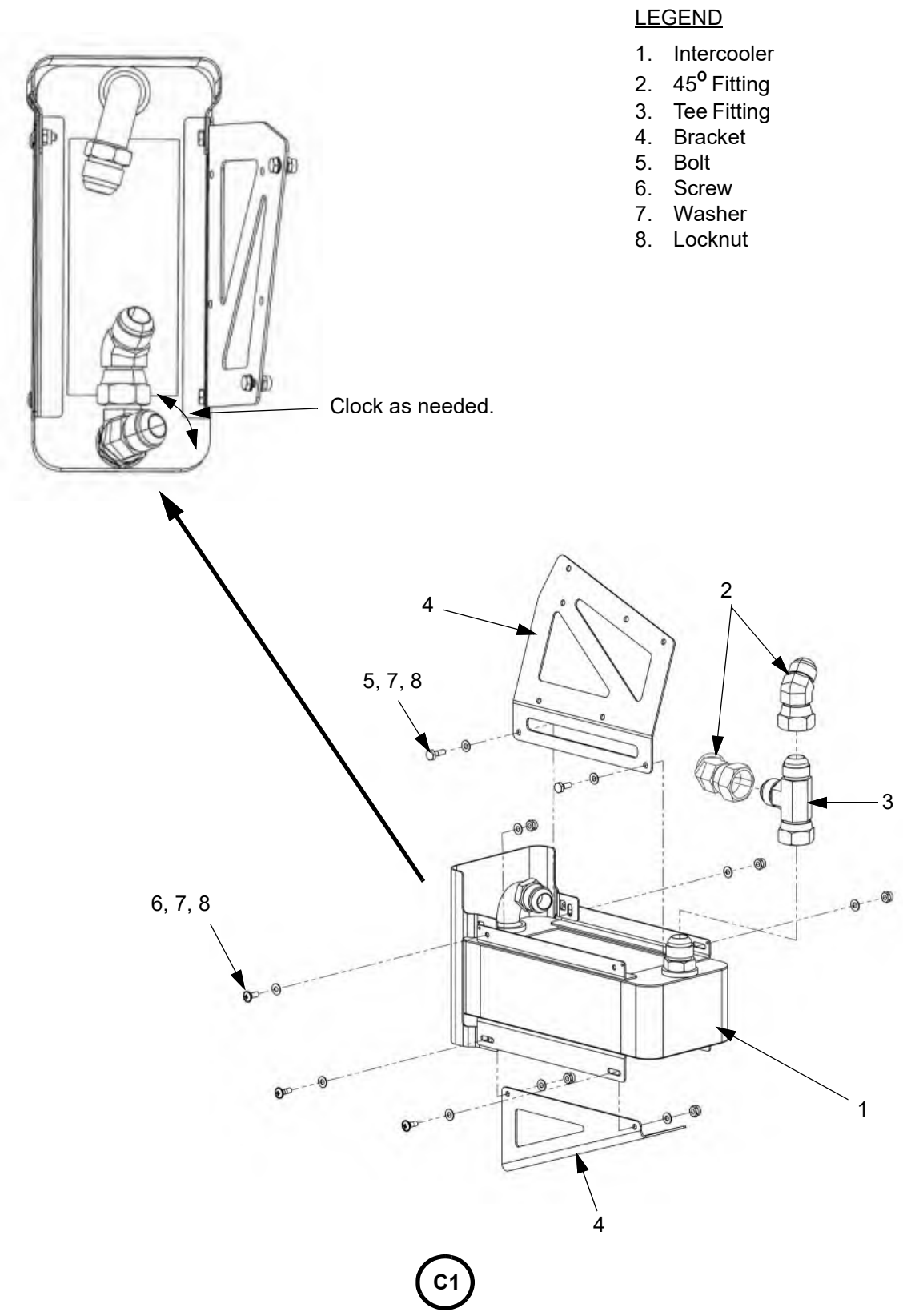

Figure 21-20.2: Air Conditioning Distribution (Sheet 7 of 11)

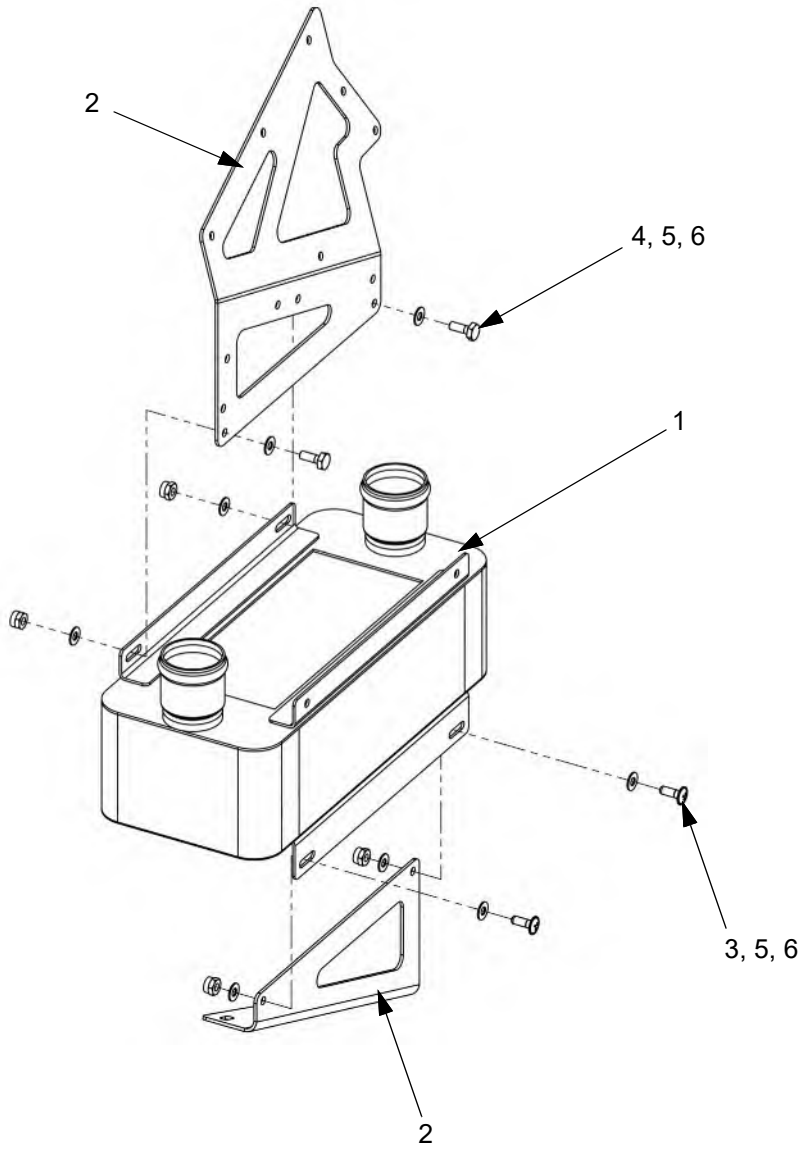

LEGEND

1. Intercooler
2. Bracket
3. Screw
4. Bolt
5. Washer
6. Locknut

Figure 21-20.2: Air Conditioning Distribution (Sheet 8 of 11)

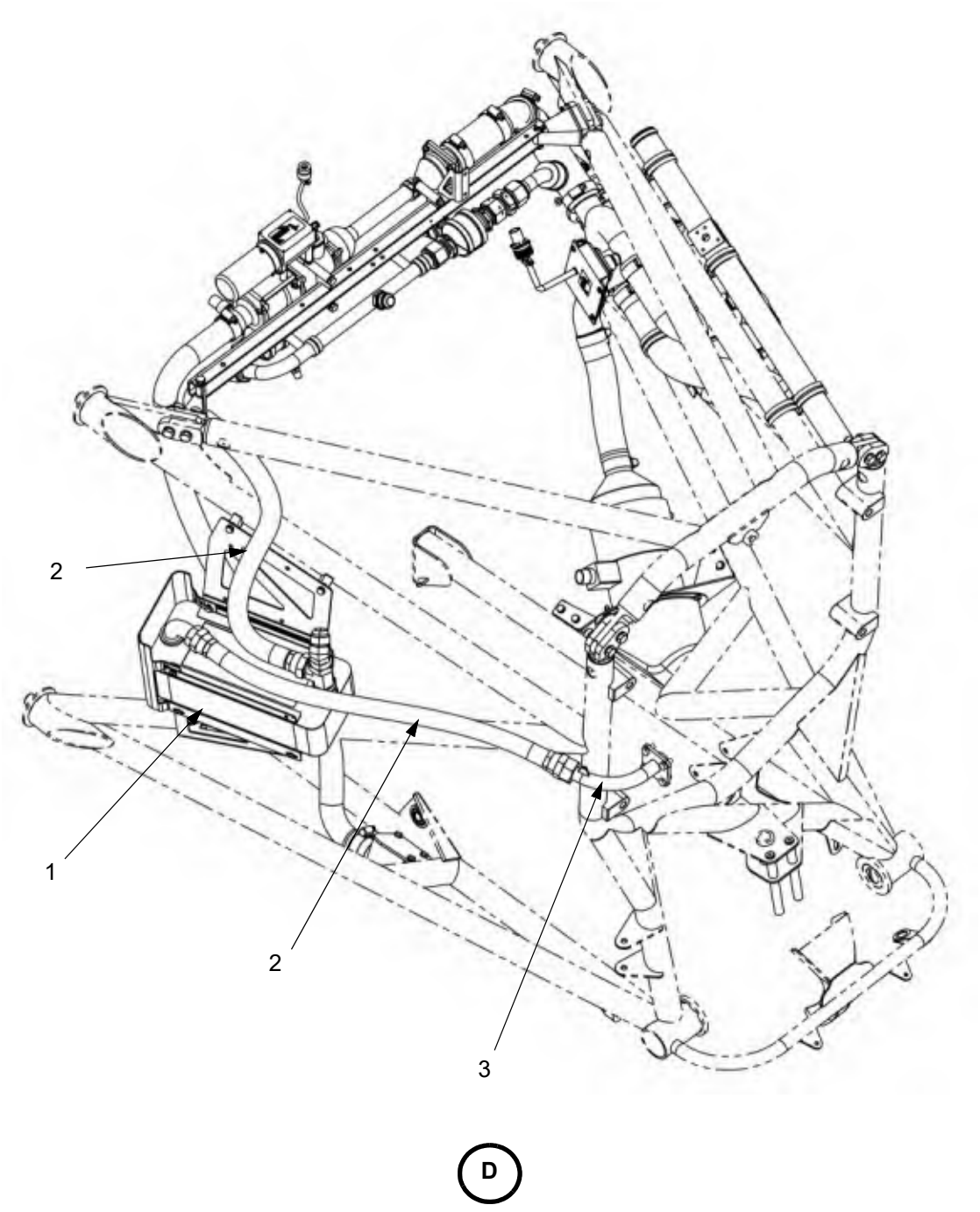

LEGEND

1. Intercooler
2. Hose
3. P3 Bleed Air Fitting

Figure 21-20.2: Air Conditioning Distribution (Sheet 9 of 11)

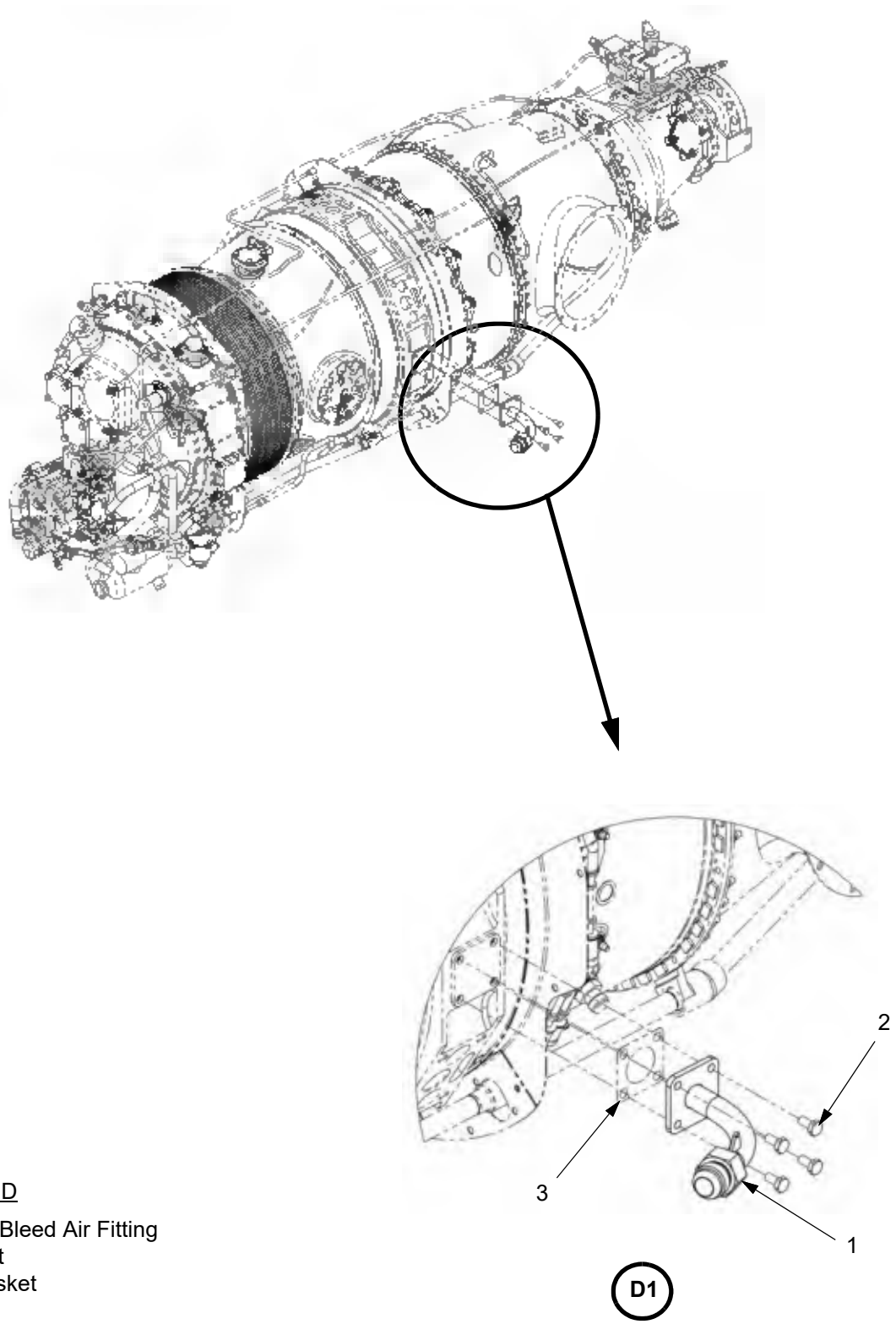

LEGEND

1. P3 Bleed Air Fitting
2. Bolt
3. Gasket

Figure 21-20.2: Air Conditioning Distribution (Sheet 10 of 11)

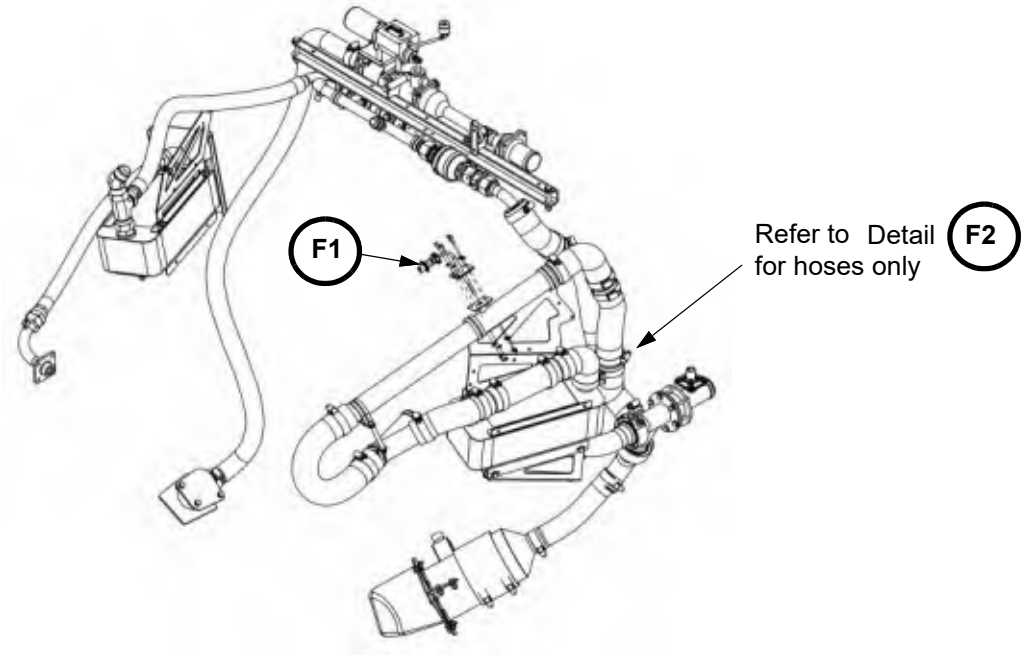

TOP VIEW

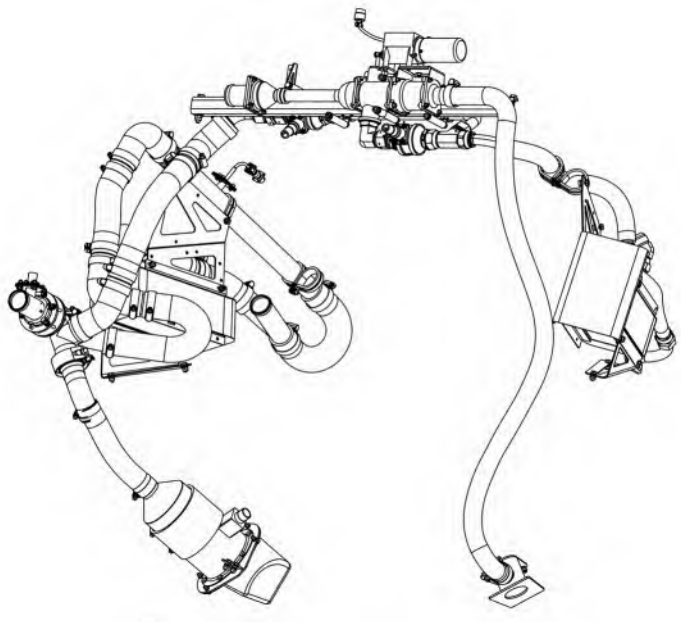

BOTTOM VIEW

F

Figure 21-20.2: Air Conditioning Distribution (Sheet 11 of 11)

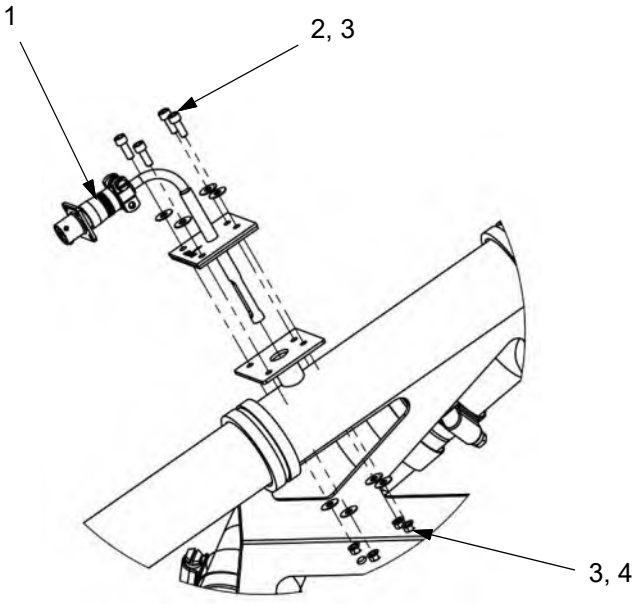

F1

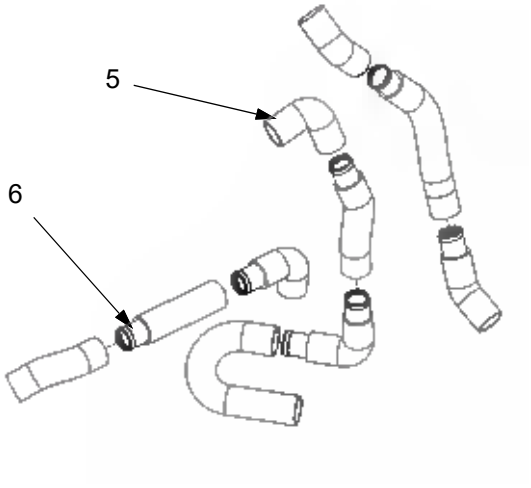

F2

LEGEND

1. Mass Flow Sensor
2. Socket Head Screw
3. Washer
4. Locknut
5. Hose
6. Hose Joiner

C. Cabin Air Conditioning Ducting

(1) Removal

(a) Remove the passenger and/or crew seats as required (refer to Chapter 25).

(b) Remove the cabin interior panels as required (refer to Chapter 25).

Note: The turn is installed using RTV 100, Type 6, or Type 3 adhesive. The aft grab handle cover is installed using type 6 or type 3 adhesive. The riser is installed using type 6 or type 3 adhesive.

(c) If the duct is installed using RTV 100, use a phenolic or hardwood razor carefully cut the adhesive to separate the duct being removed from the fuselage.

Note: If the turn is installed using Type 6 or Type 3 adhesive, contact Epic Aircraft, LLC.

(d) Remove the duct.

(2) Installation

(a) Using a phenolic or hardwood scraper remove as much of the adhesive from the fuselage as possible.

CAUTION: Do not damage the composite material of the fuselage.

(b) Bond the duct to the fuselage using RTV 100 conforming to Mil-A-46106B, Type 3 adhesive, or Type 6 adhesive as applicable applied to the flanges of the duct. Maximum bond gap 1/4".

Note: The turn is installed using RTV 100, Type 6, or Type 3 adhesive. The aft grab handle cover is installed using type 6 or type 3 adhesive. The riser is installed using type 6 or type 3 adhesive.

(c) Let the RTV 100, Type 3 adhesive, or Type 6 adhesive fully cure (refer to the adhesive manufacturer's instructions).

(d) Install the cabin interior panels as required (refer to Chapter 25).

(e) Install the passenger and/or crew seats as required (refer to Chapter 25).

Figure 21-20.3: Cabin Air Condition Duct (Sheet 1 of 2)

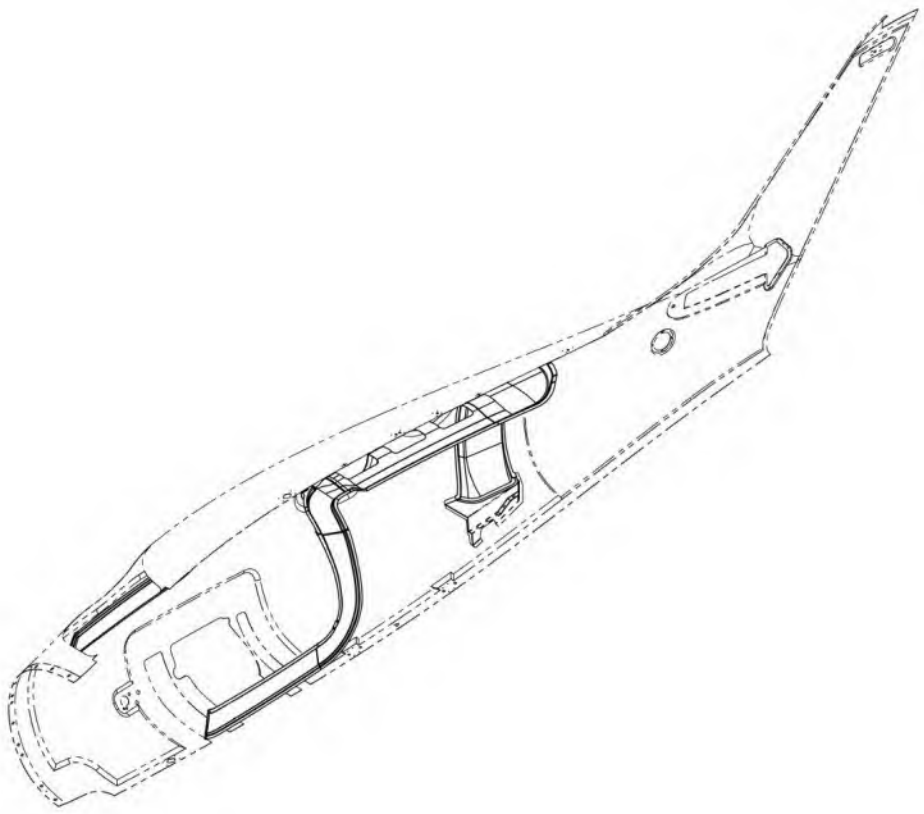

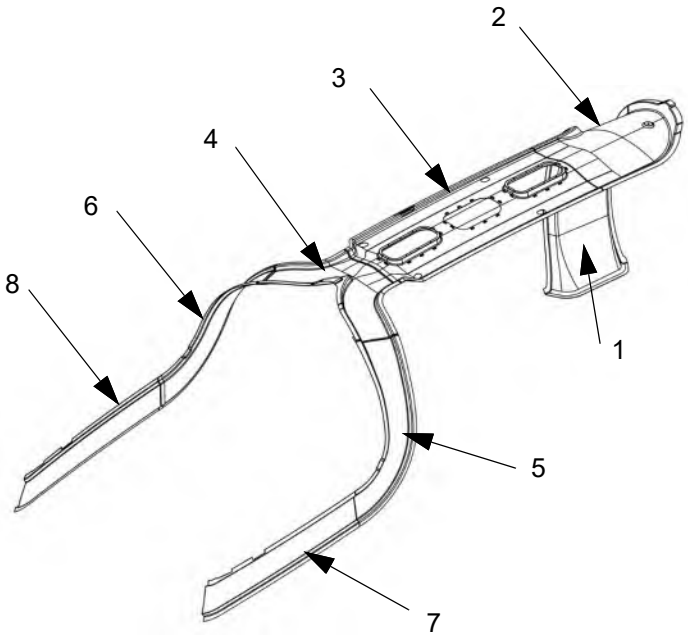

LEGEND

1. Riser
2. Turn
3. Overhead
4. Overhead Split
5. Left Drop
6. Right Drop
7. Left Reach
8. Right Reach

Figure 21-20.3: Cabin Air Condition Duct (Sheet 2 of 2)

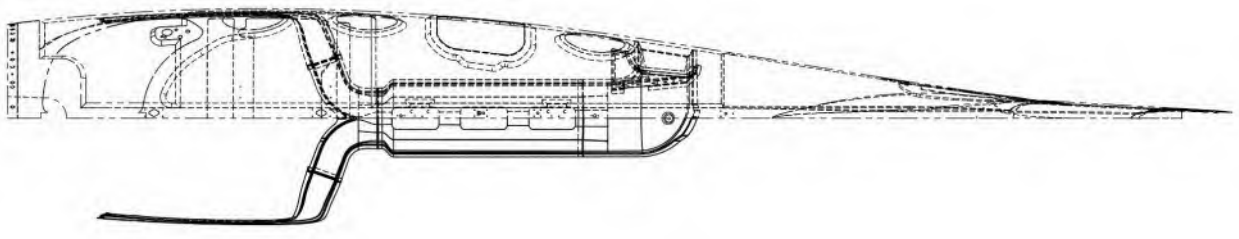

TOP VIEW

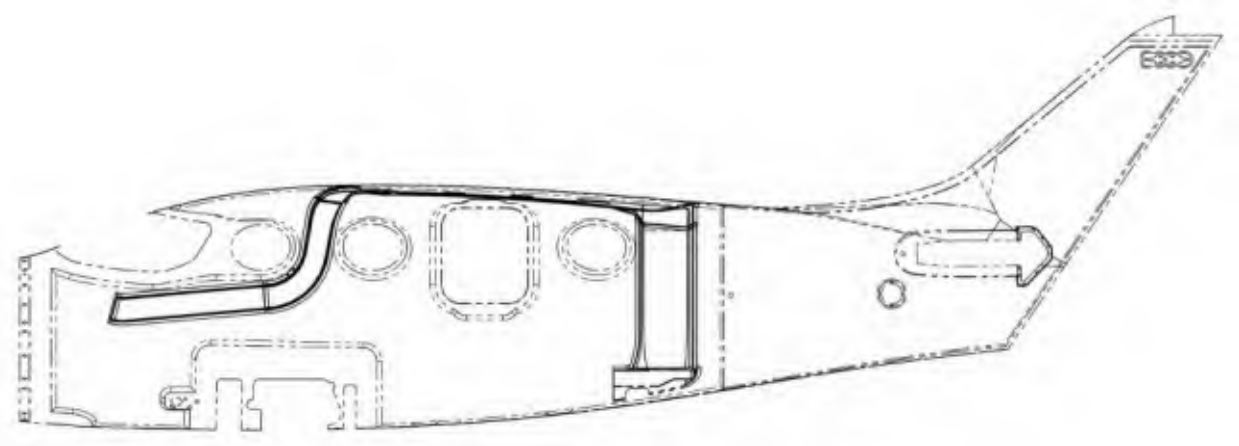

RIGHT SIDE INTERIOR VIEW

D. Crew Air Conditioning Ducting (SN: K003 - K010)

(1) Removal

(a) Remove the crew seats as required (refer to Chapter 25-10).

(b) Remove the cockpit interior panels as required (refer to Chapter 25-10).

(c) Remove the instrument panel glare shield (refer Chapter 25-10).

(d) Remove the screw, washers, and locknut attaching the duct to the tab bonded to the firewall.

(e) Loosen the hose clamps.

(f) Remove the bolts, washers, and locknuts attaching the duct to the instrument panel.

(g) Using a phenolic or hardwood razor carefully cut the adhesive (RTV 100) to separate the duct being removed from the fuselage.

(h) Remove the duct.

Note: Carefully remove the insulation sleeve encasing the routing duct and note orientation for re-installation.

(2) Installation

(a) Using a phenolic or hardwood scraper remove as much of the adhesive from the fuselage as possible.

CAUTION: Do not damage the composite material of the fuselage.

(b) Slide the routing duct into its insulation sleeve.

(c) Bond the duct to the fuselage using RTV 100 conforming to Mil-A-46106B applied to the flanges of the duct. Maximum bond gap 1/4".

(d) Let the RTV 100 fully cure (refer to the adhesive manufacturer's instructions).

(e) Attach the duct to the instrument panel using bolts, washers, and locknuts.

(f) Tighten the hose clamps.

(g) Attach the ducting to the tab on the firewall using a screw, washers, and locknuts.

(h) Install the instrument panel glare shield (refer Chapter 25-10).

(i) Install the cockpit interior panels as required (refer to Chapter 25-10).

(j) Install the crew seats as required (refer to Chapter 25-10).

Figure 21-20.4: Crew Air Conditioning Ducting (SN: K003 - K010) (Sheet 1 of 2)

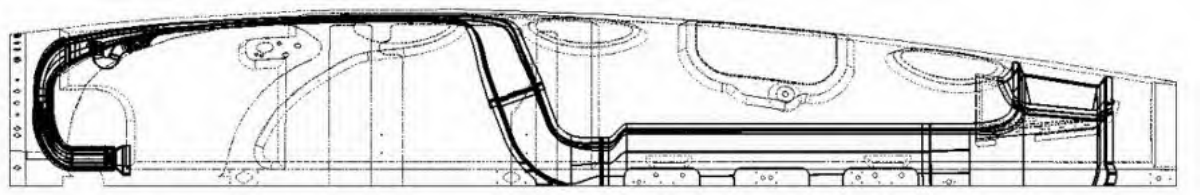

TOP VIEW

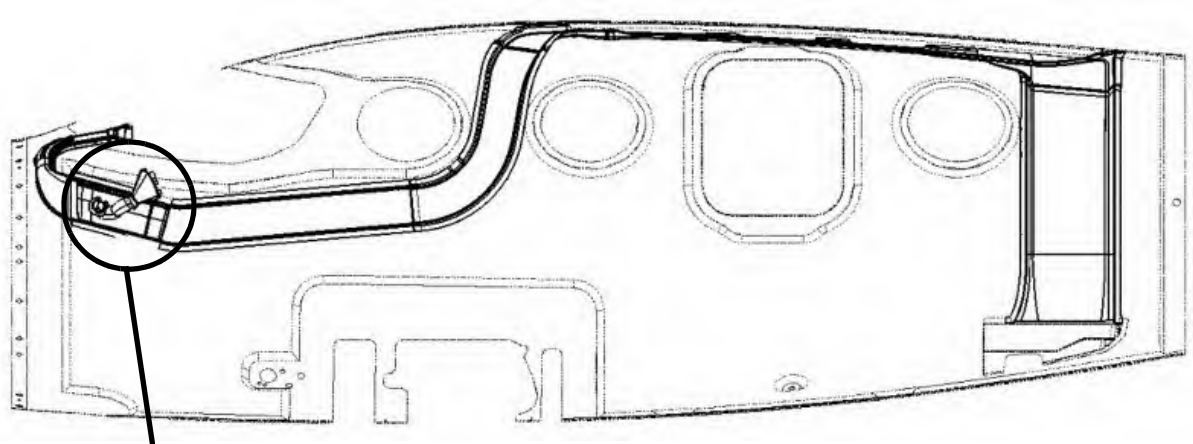

RIGHT SIDE INTERIOR VIEW

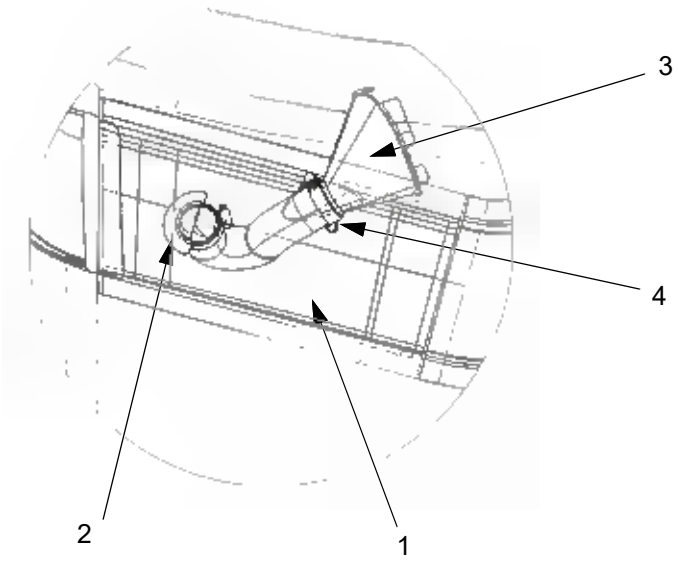

LEGEND

1. Transition Duct
2. Diverter Feeder
3. Vent
4. Hose Clamp

Figure 21-20.4: Crew Air Conditioning Ducting (SN: K003 - K010) (Sheet 2 of 2)

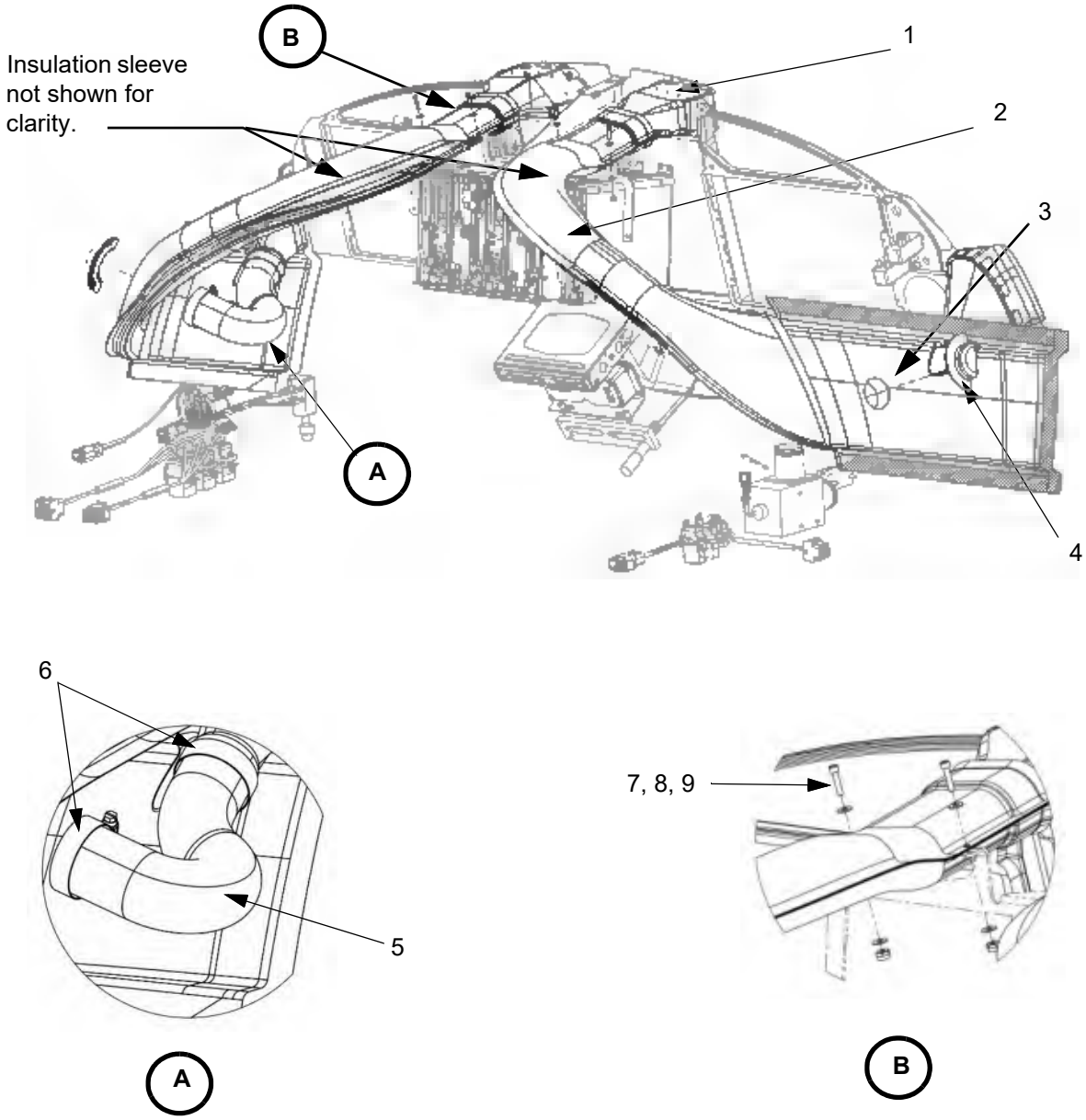

LEGEND

1. Coupler
2. Routing Duct
3. Transition Duct
4. Diverter Feeder
5. SCAT Tubing
6. Hose Clamp
7. Bolt
8. Washer
9. Locknut

E. Crew Air Conditioning Ducting (SN: K011 - K085)*

*Also K003 - K010 with SB-0017

(1) Removal

(a) Remove the crew seats as required (refer to Chapter 25-10).

(b) Remove the cockpit interior panels as required (refer to Chapter 25-10).

(c) Remove the instrument panel glare shield (refer Chapter 25-10).

(d) Remove the tie wraps that attach the CAT ducting to the structure.

(e) Loosen the hose clamps that attach the CAT-7 ducting to the vent housing and transition duct.

(f) Remove the CAT-7 ducting.

(g) Loosen the hose clamps that attach the CAT-8 ducting to the transition duct and remove the venturi tube from the eyeball vent.

(h) Remove the CAT-8 ducting/venturi tube assembly.

(i) Loosen the hose clamp that attaches the CAT-8 ducting to the venturi tube and remove the venturi tube.

(j) Remove the (4) screws and washers that attach the eyeball vent to the center display bezel.

(k) Remove the containment flange, wave spring, friction spacer, and eyeball vent from the center display bezel.

(2) Installation

(a) Put the eyeball vent, friction spacer, wave spring, and containment flange in position in the center display bezel.

(b) Install the (4) screws and washers that attach the eyeball vent to the center display bezel. Torque the screws to 10 - 14 in-lbs.

(c) Put the CAT-8 ducting on the venturi tube and tighten the hose clamp.

(d) Put the venturi tube in position in the eyeball vent and the CAT-8 ducting on the transition duct and tighten the hose clamp.

(e) Put the CAT-7 ducting on the transition duct and vent housing and tighten the hose clamps.

(f) Install the tie wraps that attach the CAT ducting to the structure.

(g) Install the instrument panel glare shield (refer Chapter 25-10).

(h) Install the cockpit interior panels as required (refer to Chapter 25-10).

(i) Install the crew seats as required (refer to Chapter 25-10).

Figure 21-20.5: Crew Air Conditioning Ducting (SN: K011 - K085) (Sheet 1 of 2)

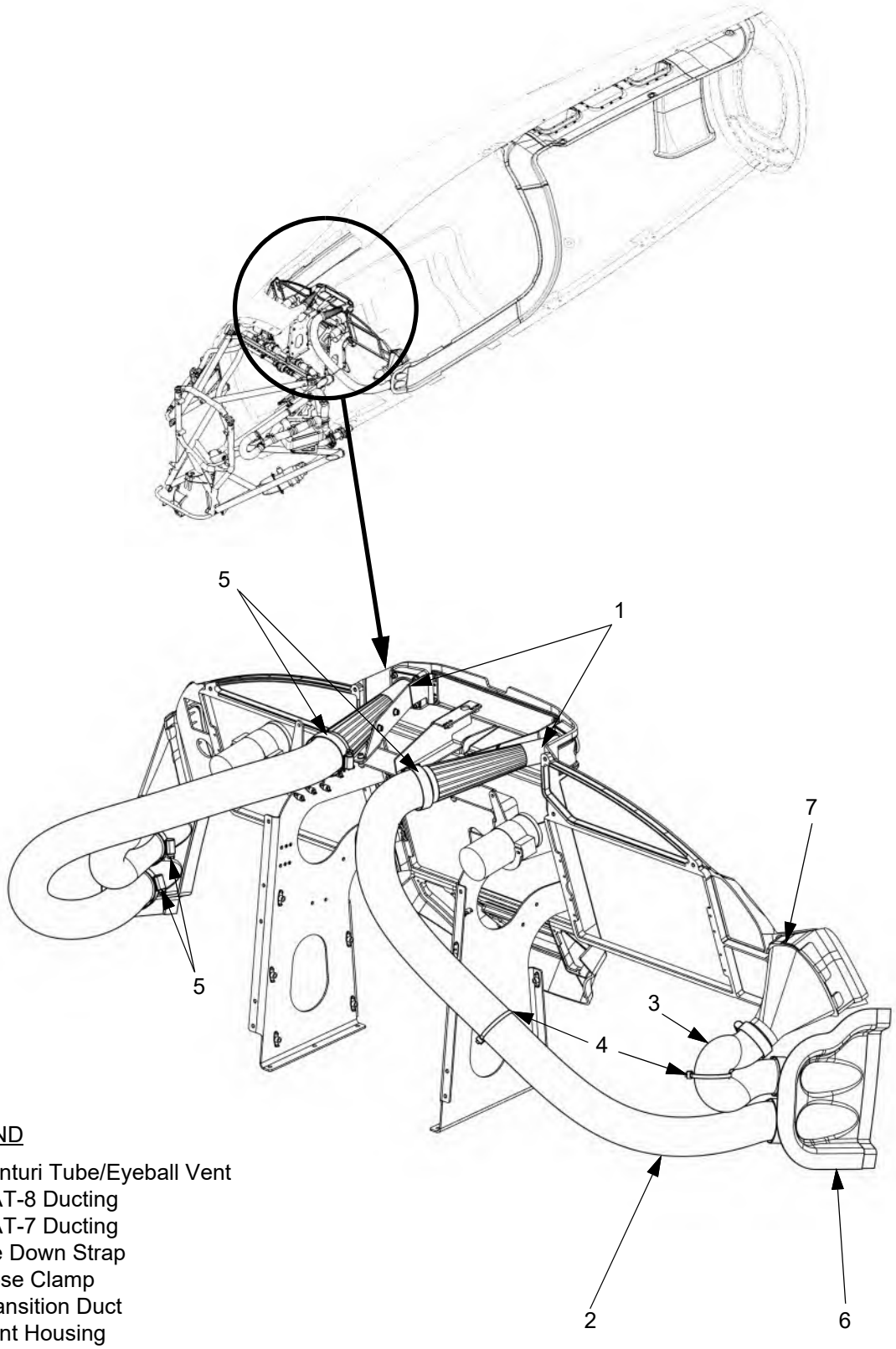

LEGEND

1. Venturi Tube/Eyeball Vent
2. CAT-8 Ducting
3. CAT-7 Ducting
4. Tie Down Strap
5. Hose Clamp
6. Transition Duct
7. Vent Housing

Figure 21-20.5: Crew Air Conditioning Ducting (SN: K011 - K085) (Sheet 2 of 2)

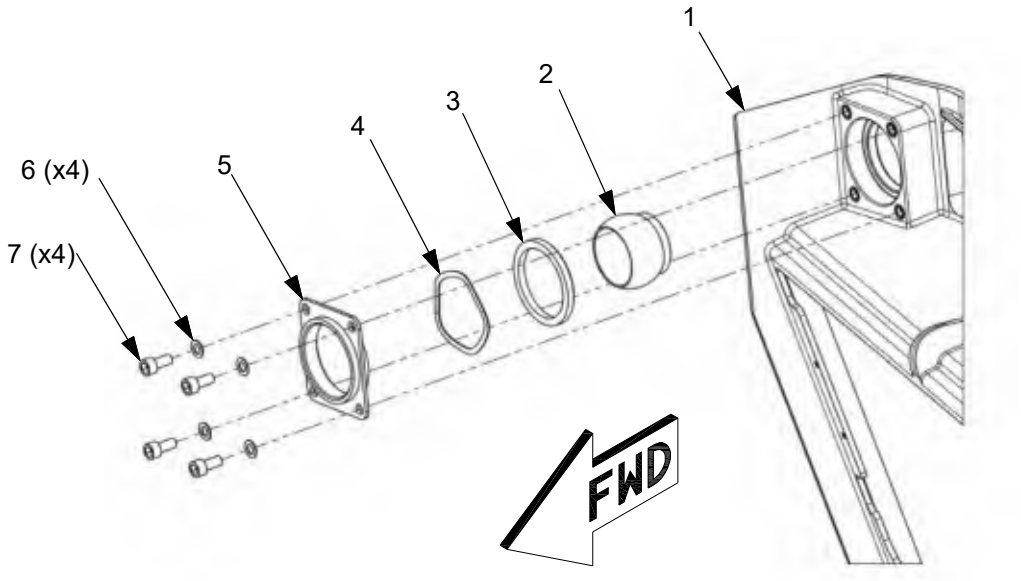

RIGHT SIDE SHOWN, LEFT SIDE OPPOSITE

LEGEND

1. Autopilot Head Unit Bezel
2. Eyeball Vent
3. Friction Spacer
4. Wave Spring
5. Flange
6. Screw
7. Washer

F. Crew Air Conditioning Ducting (SN: K014, K086 and On)

(1) Removal

(a) Remove the crew seats as required (refer to Chapter 25-10).

(b) Remove the cockpit interior panels as required (refer to Chapter 25-10).

(c) Remove the instrument panel glare shield (refer Chapter 25-10).

(d) Remove the tie wraps that attach the CAT ducting to the structure.

(e) Loosen the hose clamps that attach the CAT-7 ducting to the vent housing and transition duct.

(f) Remove the CAT-7 ducting.

(g) Loosen the hose clamps that attach the CAT-8 ducting to the transition duct and plenum.

(h) Remove the CAT-8 ducting.

(i) Remove the (2) screw and washers that attach the plenum to the structure and remove the plenum.

(j) Remove the (3) screws and washers that attach the eyeball vent to the center display bezel.

(k) Remove the containment flange, wave spring, friction spacer, eyeball vent, and insert from the autopilot head unit bezel.

(2) Installation

(a) Put the insert, eyeball vent, friction spacer, wave spring, and containment flange in position in the autopilot head unit bezel.

(b) Install the (3) screws and washers that attach the eyeball vent to the center display bezel. Torque the screws to 10 - 14 in-lbs.

(c) Put the CAT-8 ducting on the venturi tube and tighten the hose clamp.

(d) Put the venturi tube in position in the eyeball vent and the CAT-8 ducting on the transition duct and tighten the hose clamp.

(e) Put the CAT-7 ducting on the transition duct and vent housing and tighten the hose clamps.

(f) Install the tie wraps that attach the CAT ducting to the structure.

(g) Install the instrument panel glare shield (refer Chapter 25-10).

(h) Install the cockpit interior panels as required (refer to Chapter 25-10).

(i) Install the crew seats as required (refer to Chapter 25-10).

Figure 21-20.6: Crew Air Conditioning Ducting (SN: K014, K086 and On) (Sheet 1 of 2)

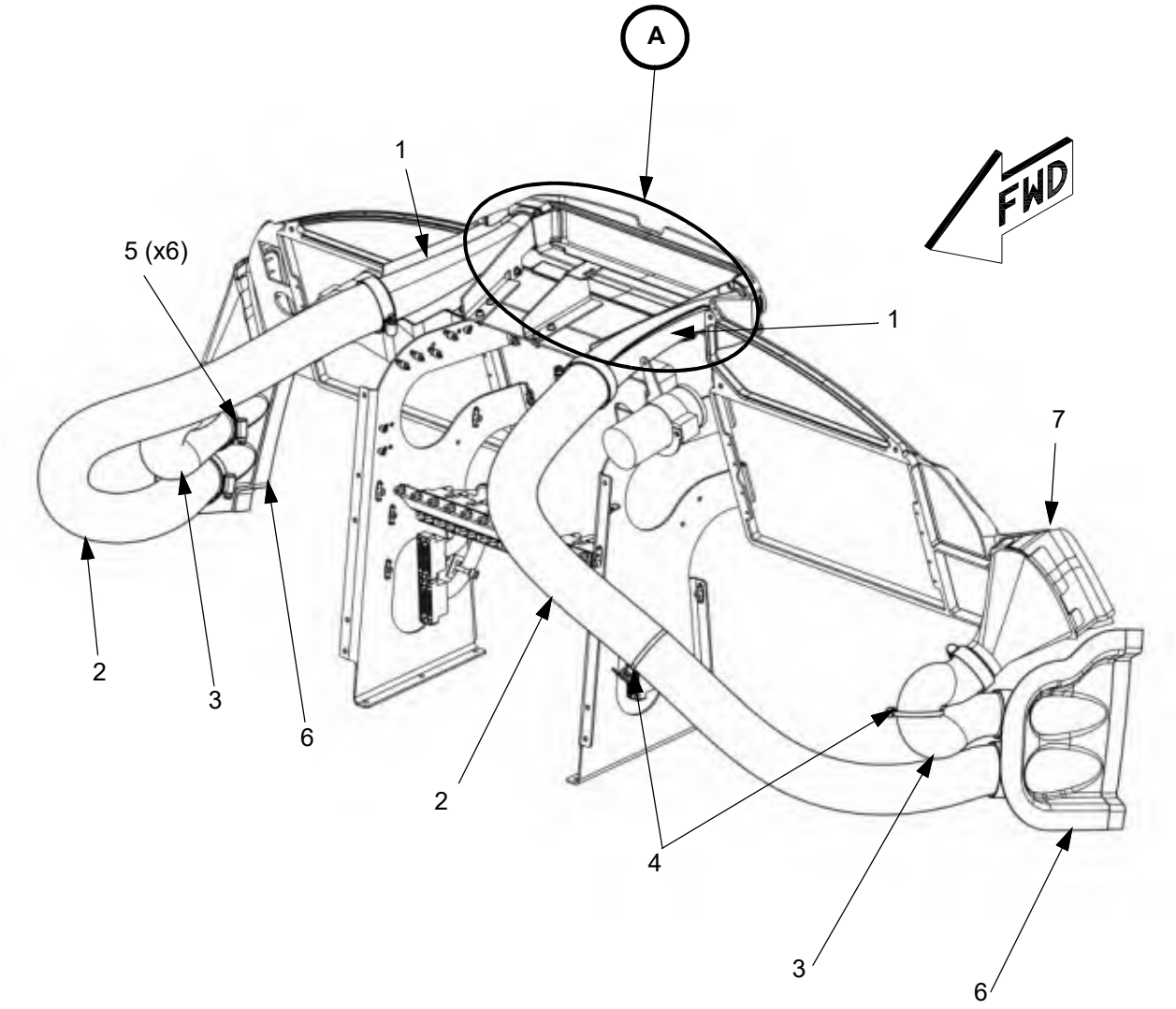

LEGEND

1. Plenum
2. CAT-8 Ducting
3. CAT-7 Ducting
4. Tie Down Strap
5. Hose Clamp
6. Transition Duct
7. Vent Housing

Figure 21-20.6: Crew Air Conditioning Ducting (SN: K014, K086 and On) (Sheet 2 of 2)

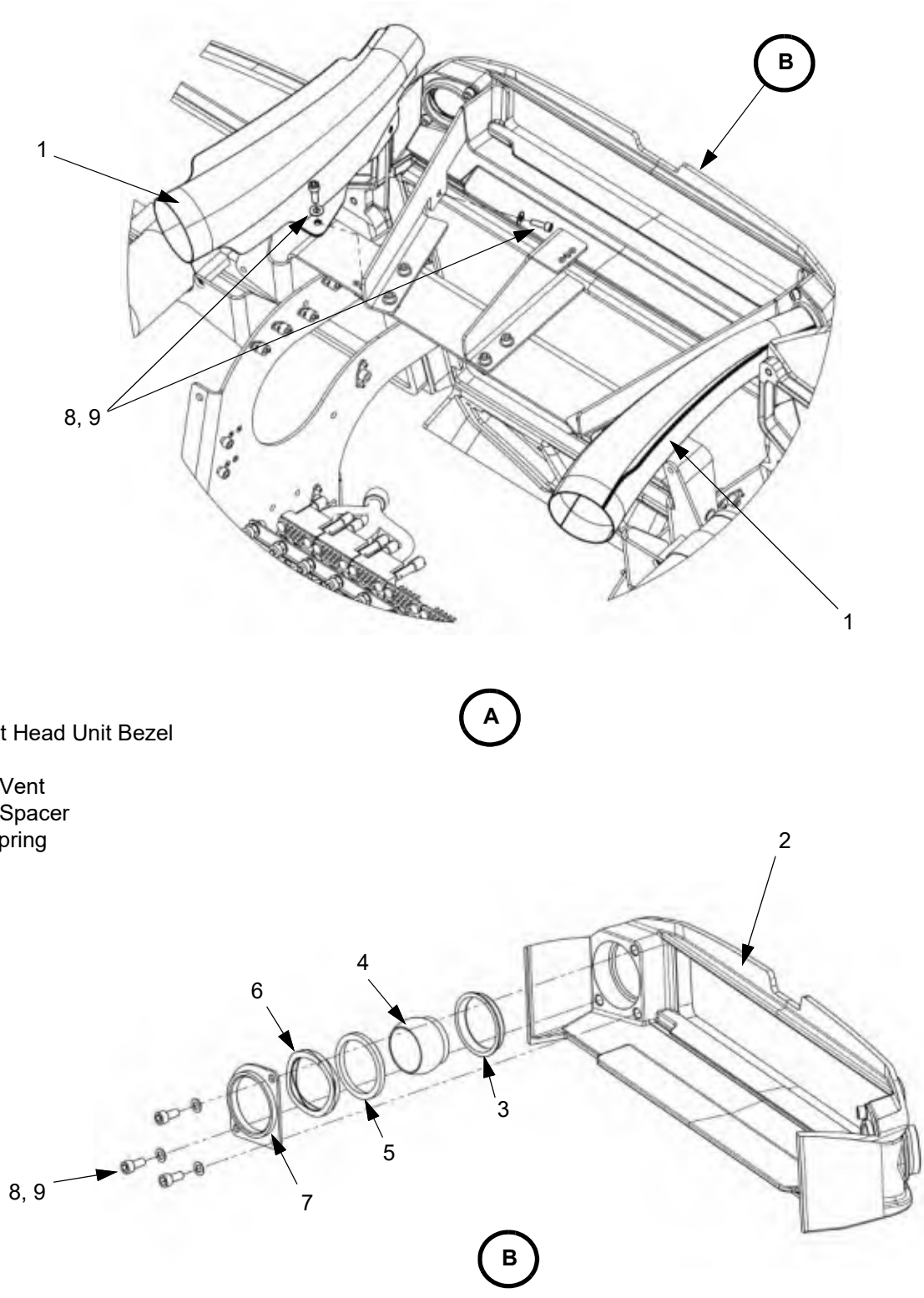

LEGEND

1. Plenum
2. Autopilot Head Unit Bezel
3. Insert
4. Eyeball Vent
5. Friction Spacer
6. Wave Spring
7. Flange
8. Screw
9. Washer

RIGHT SIDE SHOWN, LEFT SIDE OPPOSITE

G. Air Gasper Valve

(1) Removal

(a) Remove the passenger and/or crew seats as required (refer to Chapter 25).

(b) Remove the cabin overhead panel (refer to Chapter 25-20).

(c) Remove the foam seal.

(d) Loosen the hose clamp and remove the plenum from the gasper valve.

(e) Unscrew the lock ring of the gasper valve and remove the gasper valve.

(2) Installation

(a) Insert the gasper valve through the overhead finish panel and install the lock ring.

(b) Tighten the lock ring snug plus 1/2 turn.

(c) Attach the plenum to the back of the gasper valve using a hose clamp.

Note: Make sure the mating surface of the plenum is aligned with the mating surface of the duct.

(d) Install the foam seal on the plenum.

(e) Install the overhead finish panel (refer to Chapter 25-20).

Note: Make sure the gasper valve plenums seat into the overhead air duct, and the foam rings seal the joint between the plenums and the duct.

(f) Install the passenger and/or crew seats as required (refer to Chapter 25).

Figure 21-20.7: Gasper Valves

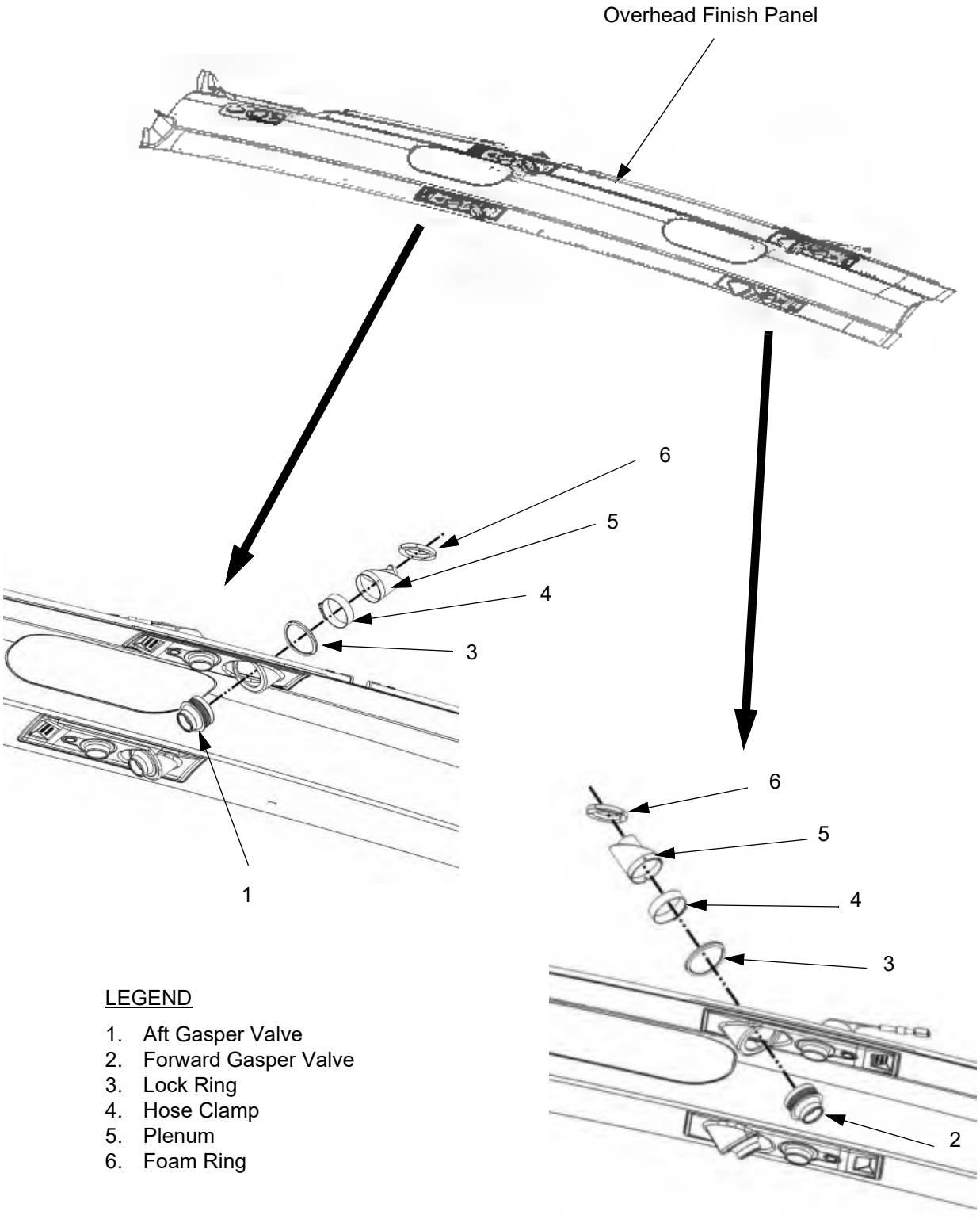

LEGEND

1. Aft Gasper Valve
2. Forward Gasper Valve
3. Lock Ring
4. Hose Clamp
5. Plenum
6. Foam Ring

H. Heat Distribution

(1) Removal

(a) Remove the cowling (refer to Chapter 71-10).

(b) Remove the hose connecting the mass flow valve to the temperature control valve.

(c) Disconnect the wiring harness from the temperature control valve.

(d) Disconnect the hoses connecting the temperature control valve to the intercooler.

(e) Remove the bolts, washers, and standoffs securing the temperature control valve to the engine mount then remove the valve from the airplane.

(2) Installation

(a) Install the temperature control valve.

(b) Install the hose connecting the temperature control valve to the mass flow valve.

(c) Connect the intercooler hoses to the temperature control valve.

(d) Connect the wiring harness to the temperature control valve.

(e) Install the cowling (refer to Chapter 71-10).

I. Heat Distribution Ducting

(1) Removal

(a) Remove the passenger and/or crew seats as required (refer to Chapter 25).

(b) Remove the crew and passenger lower finish panels of the heat distribution ducting to be removed (refer to Chapter 25).

(c) Loosen applicable hose clamps.

(d) Remove the ducting.

(2) Installation

(a) Install the ducting.

(b) Tighten hose clamps.

(c) Install the applicable crew and/or passenger lower finish panels (refer to Chapter 25).

(d) Install the passenger and/or crew seats, as applicable (refer to Chapter 25).

Figure 21-20.8: Heat Distribution (Sheet 1 of 11)

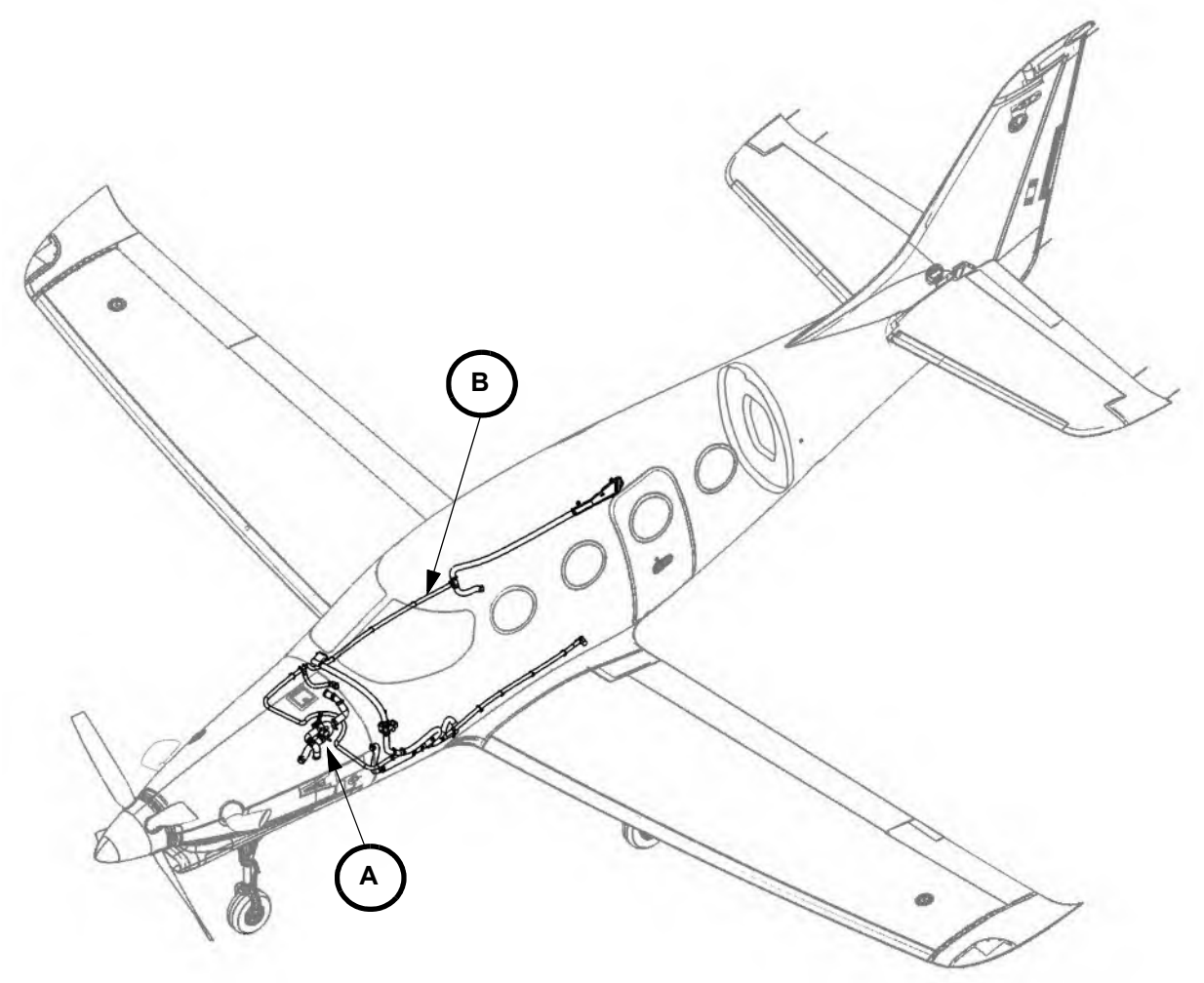

Figure 21-20.6: Heat Distribution (Sheet 2 of 11)

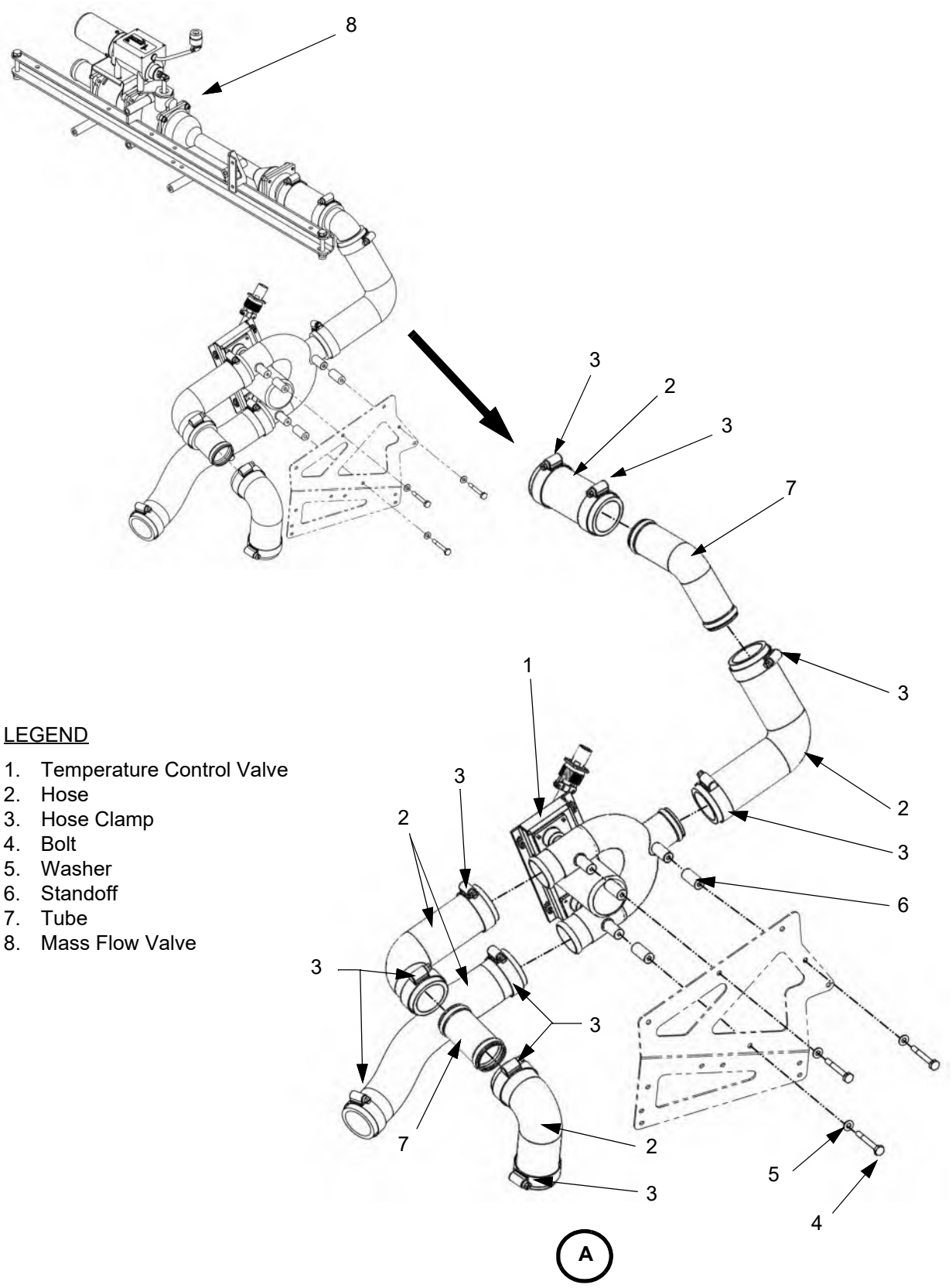

LEGEND

1. Temperature Control Valve
2. Hose
3. Hose Clamp
4. Bolt
5. Washer
6. Standoff
7. Tube
8. Mass Flow Valve

Figure 21-20.6: Heat Distribution K003 - K006 (Sheet 3 of 11)

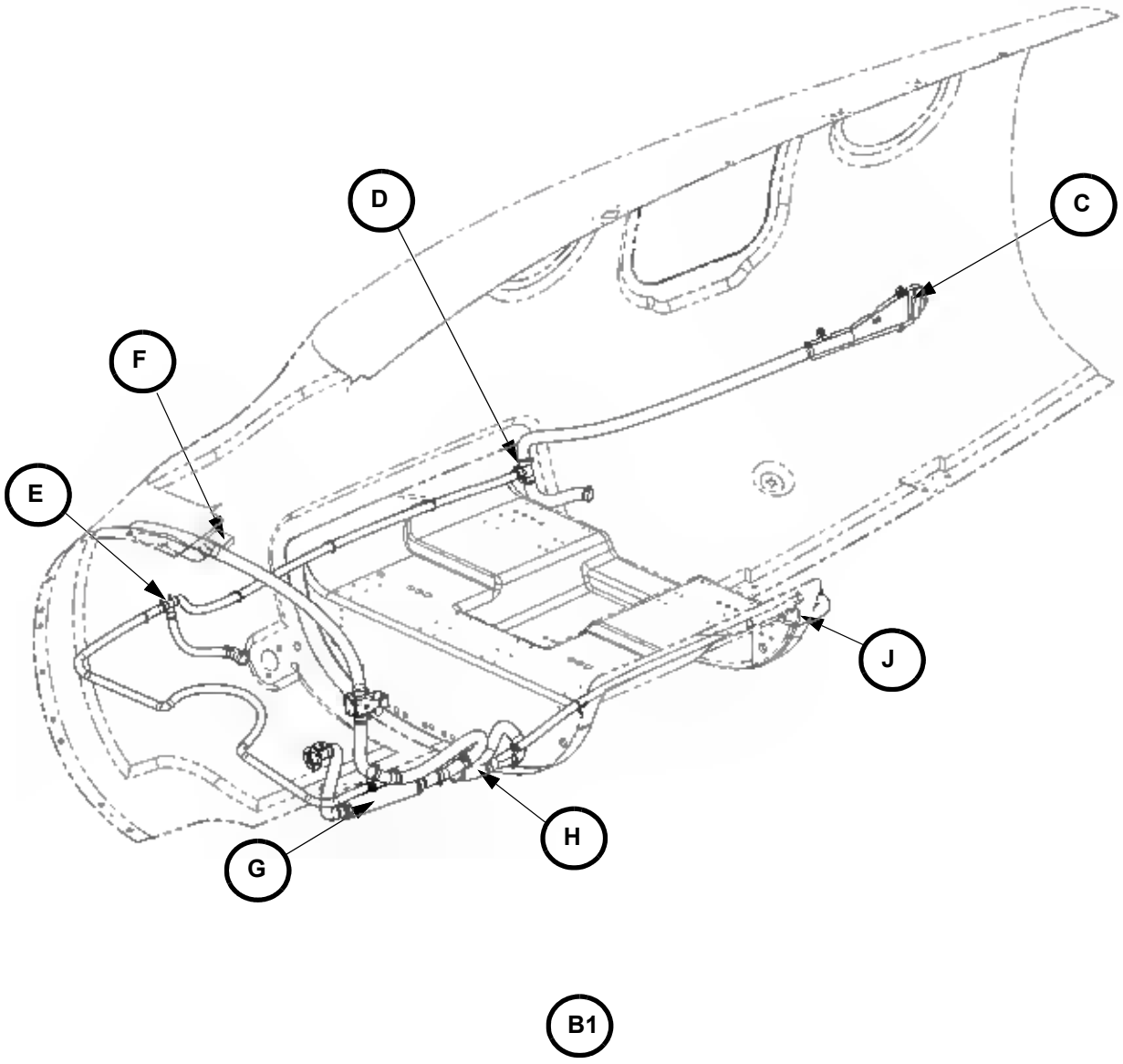

Figure 21-20.6: Heat Distribution K003 - K006 (Sheet 4 of 11)

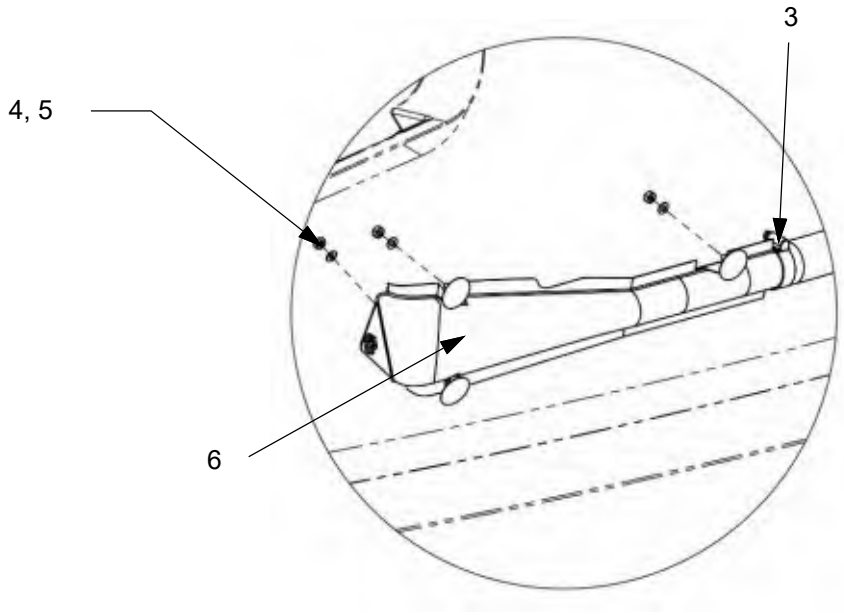

C

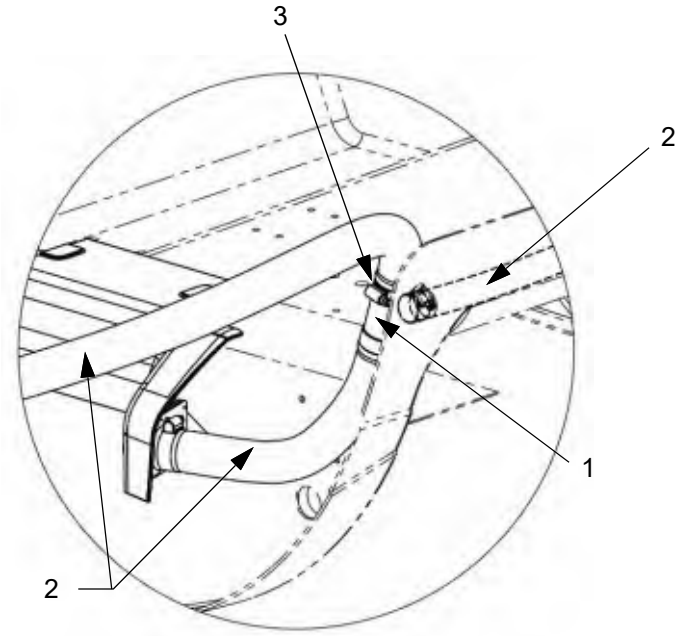

D

LEGEND

1. T-Pipe
2. SCAT Hose
3. Hose Clamp
4. Washer
5. Locknut
6. Plenum

Figure 21-20.6: Heat Distribution K003 - K006 (Sheet 5 of 11)

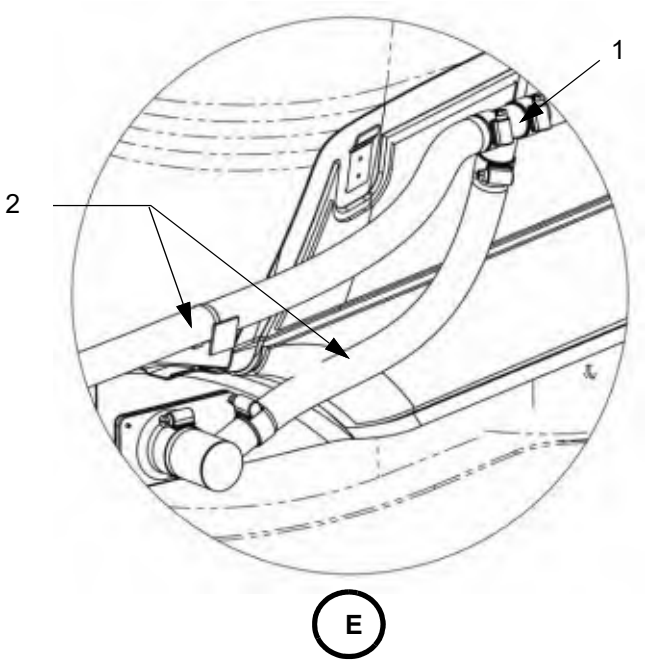

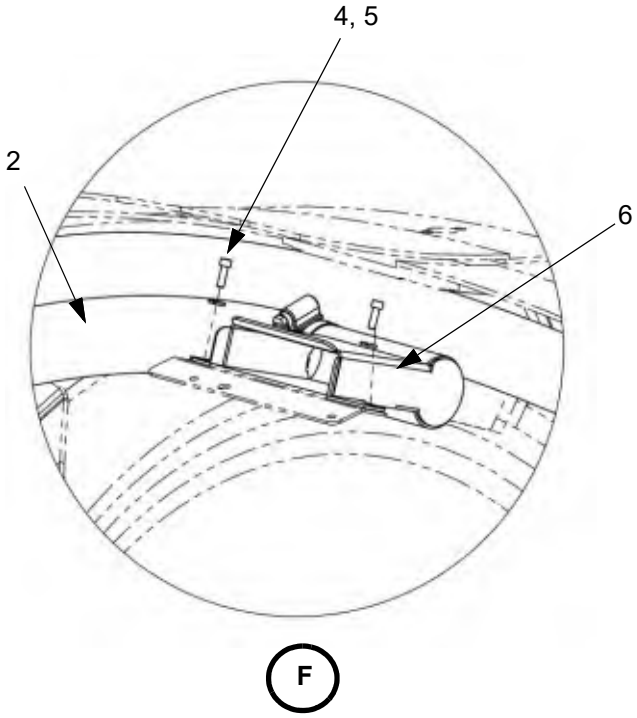

LEGEND

1. T-Pipe
2. SCAT Hose
3. Hose Clamp
4. Socket Head Screw
5. Washer
6. Elbow Adapter

Figure 21-20.6: Heat Distribution K003 - K006 (Sheet 6 of 11)

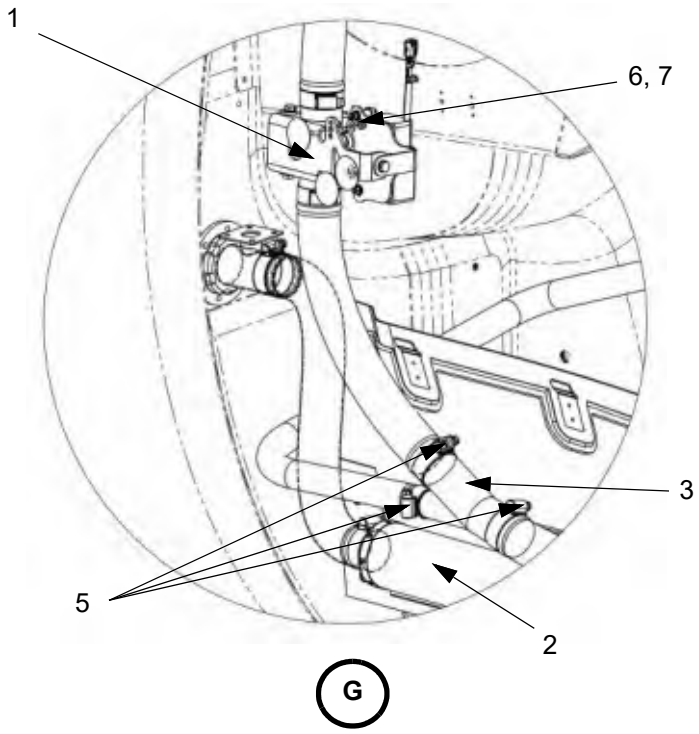

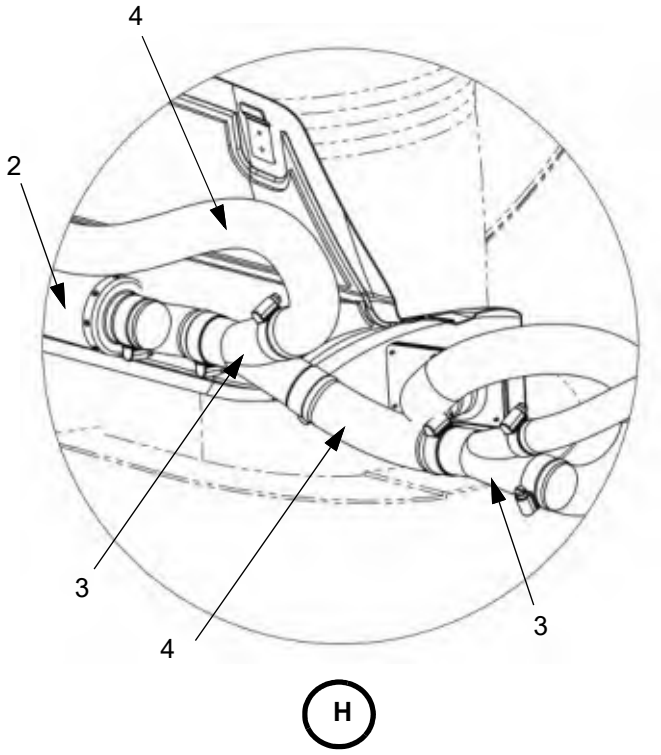

LEGEND

1. Defrost Valve
2. Muffler
3. Y-Pipe
4. SCAT Hose
5. Hose Clamp
6. Washer
7. Locknut

Figure 21-20.6: Heat Distribution K003 - K006 (Sheet 7 of 11)

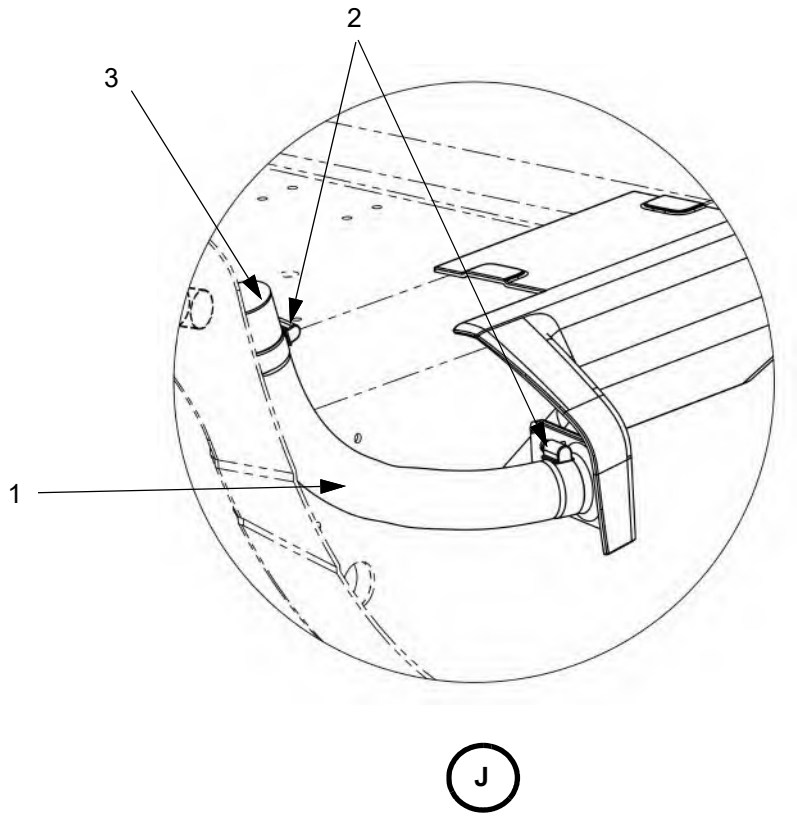

LEGEND

1. SCAT Hose
2. Hose Clamp
3. Elbow Adapter

Figure 21-20.6: Heat Distribution K007 and On (Sheet 8 of 11)

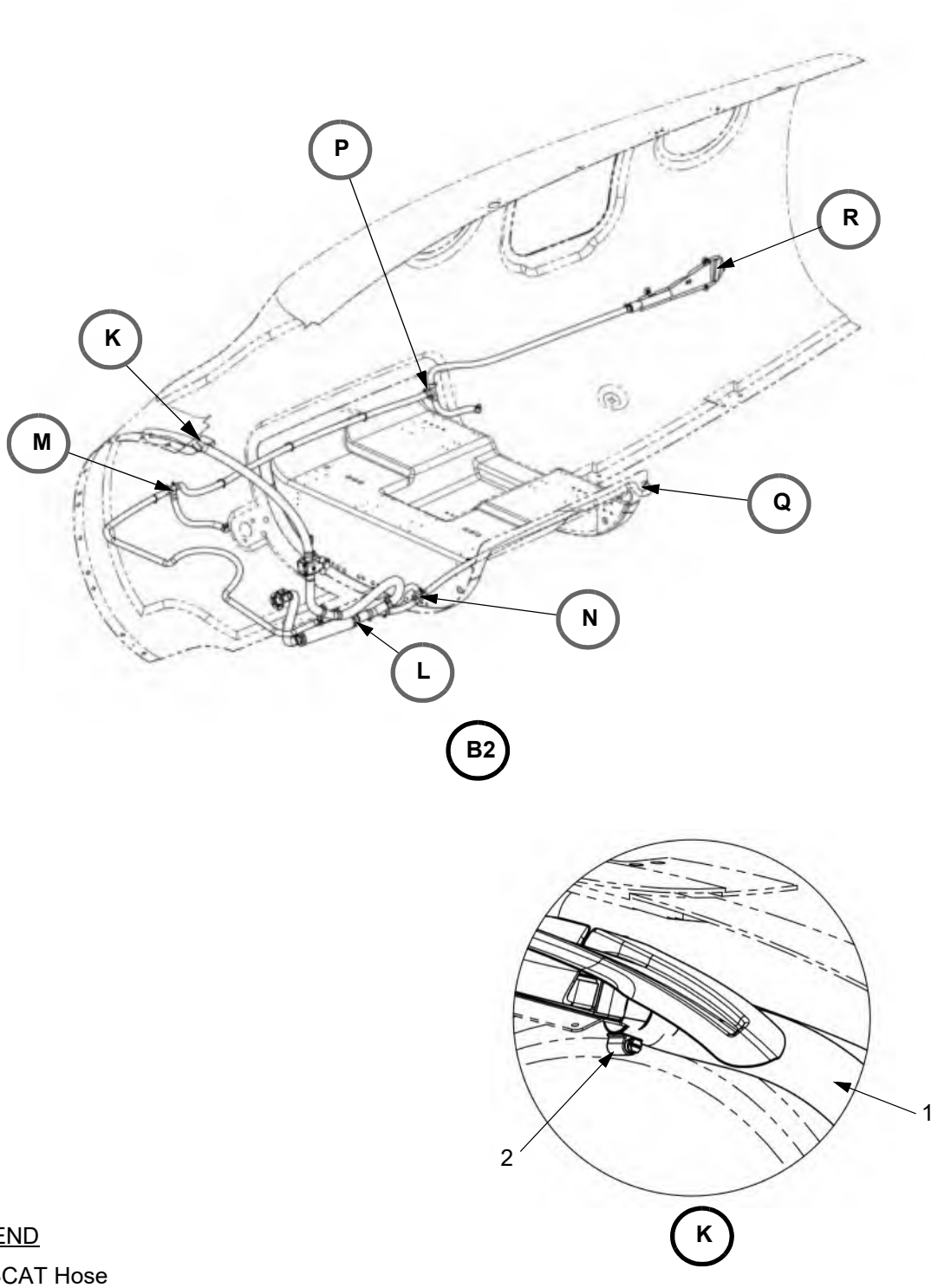

LEGEND

1. SCAT Hose
2. Hose Clamp

Figure 21-20.6: Heat Distribution K007 and On (Sheet 9 of 11)

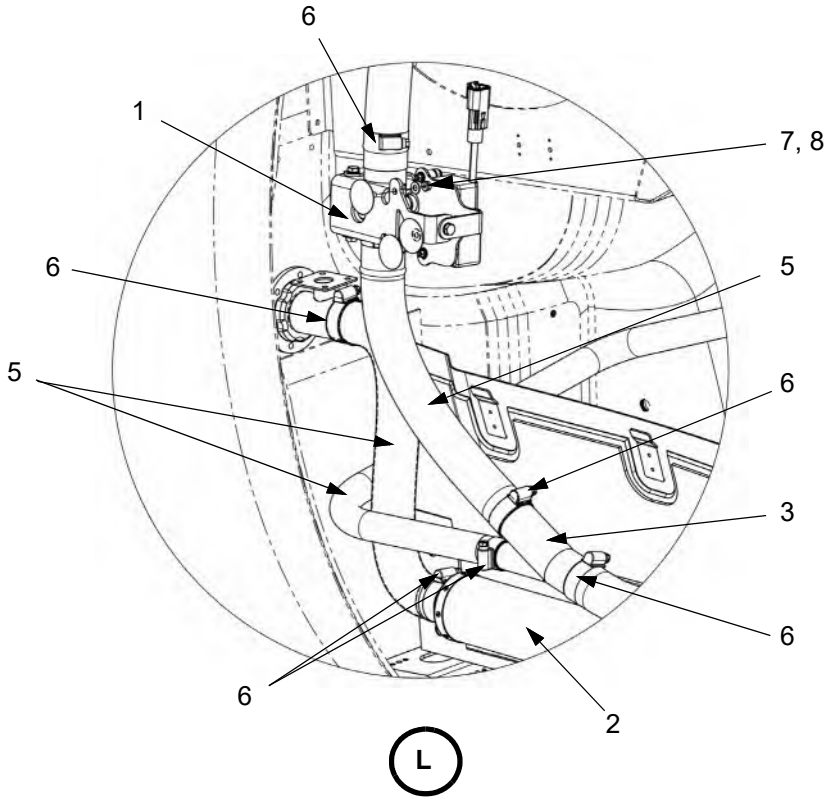

LEGEND

1. Defrost Valve
2. Muffler
3. Y-Pipe
4. T-Pipe
5. SCAT Hose
6. Hose Clamp
7. Washer
8. Locknut

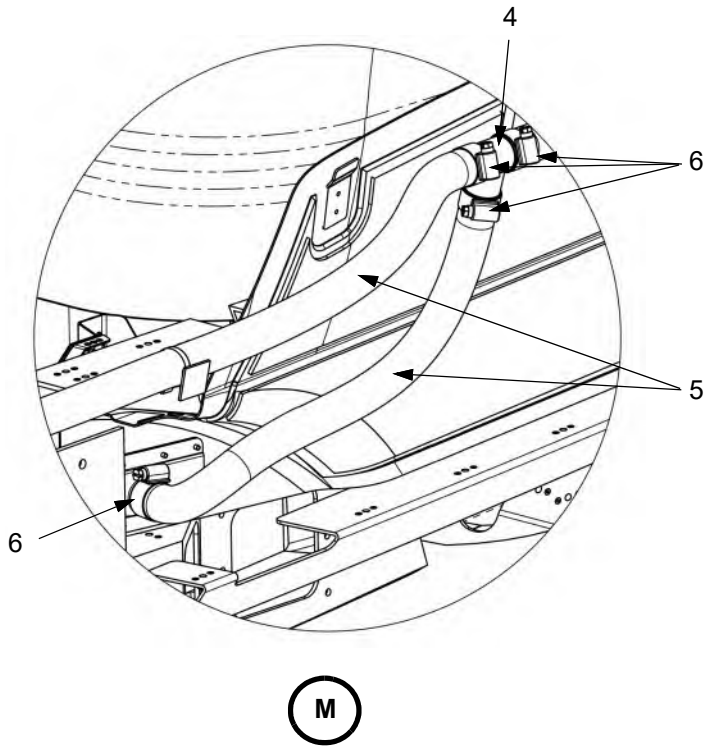

Figure 21-20.6: Heat Distribution K007 and On (Sheet 10 of 11)

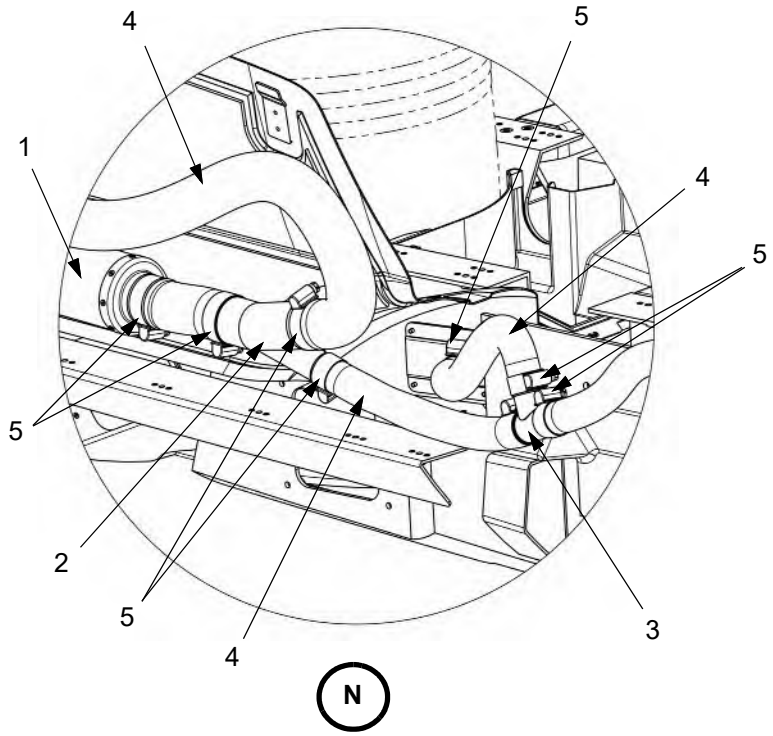

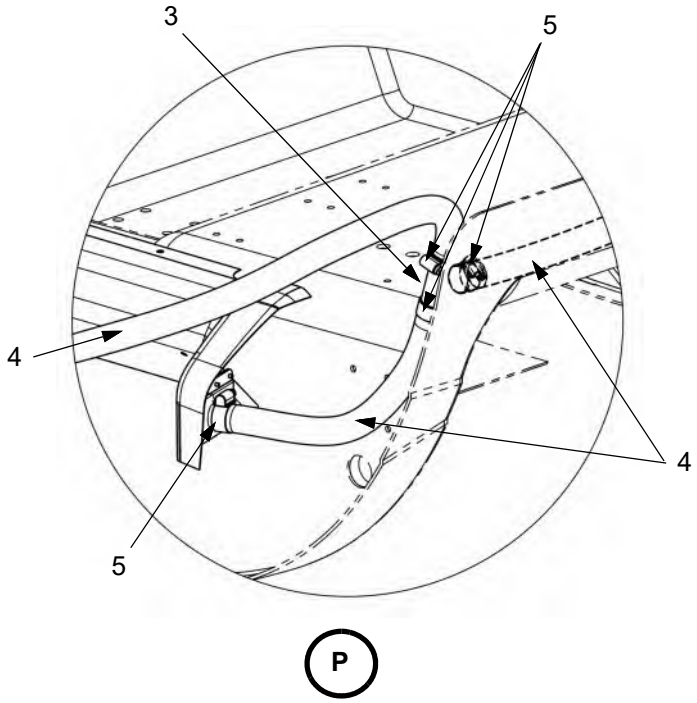

LEGEND

1. Muffler
2. Y-Pipe
3. T-Pipe
4. SCAT Hose
5. Hose Clamp

Figure 21-20.6: Heat Distribution K007 and On (Sheet 11 of 11)

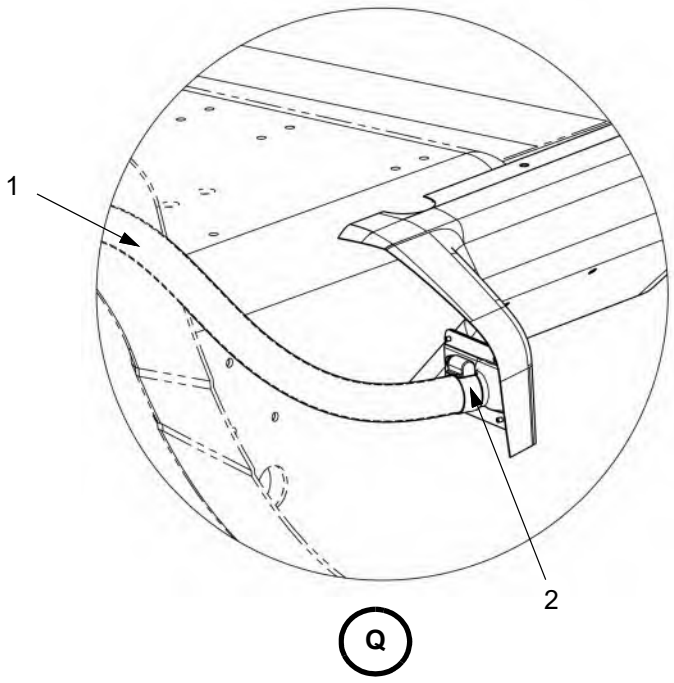

LEGEND

1. SCAT Hose
2. Hose Clamp
3. Washer
4. Locknut
5. Plenum

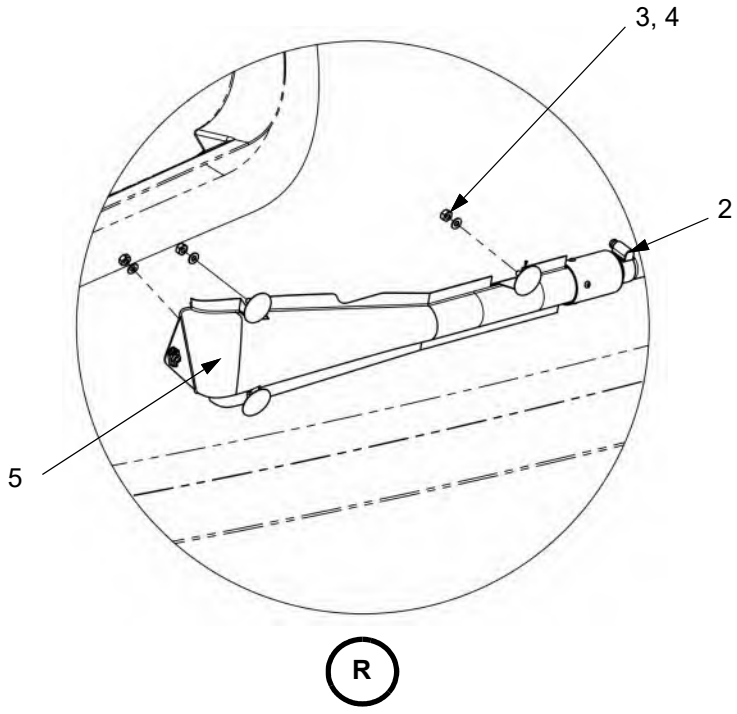

J. Temperature Controller

The temperature controller works in coordination with the temperature control valve to direct output of P3 air from the mass flow valve into the intercooler. Butterfly valves in the temperature control valve are variably opened or closed from the cabin to let all, some, or none of the P3 air from the mass flow valve through the intercooler before it is directed into the airplane cabin.

(1) Removal

(a) Remove PFD 1 (refer to Chapter 34-40).

(b) Remove the socket head screws, washers, and locknuts that attach the controller to the instrument panel.

(c) Carefully pull the controller forward then disconnect the wiring harness.

(d) Remove the controller.

(2) Installation

(a) Inspect the wiring connectors to ensure there are no bent or damaged pins. Repair any damage.

(b) Connect the wiring harness to the back of the mass flow sensor controller.

(c) Attach the controller to the instrument panel using socket head screws, washers, and locknuts.

(d) Install PFD 1 (refer to Chapter 34-40).

Figure 21-20.9: Temperature Controller

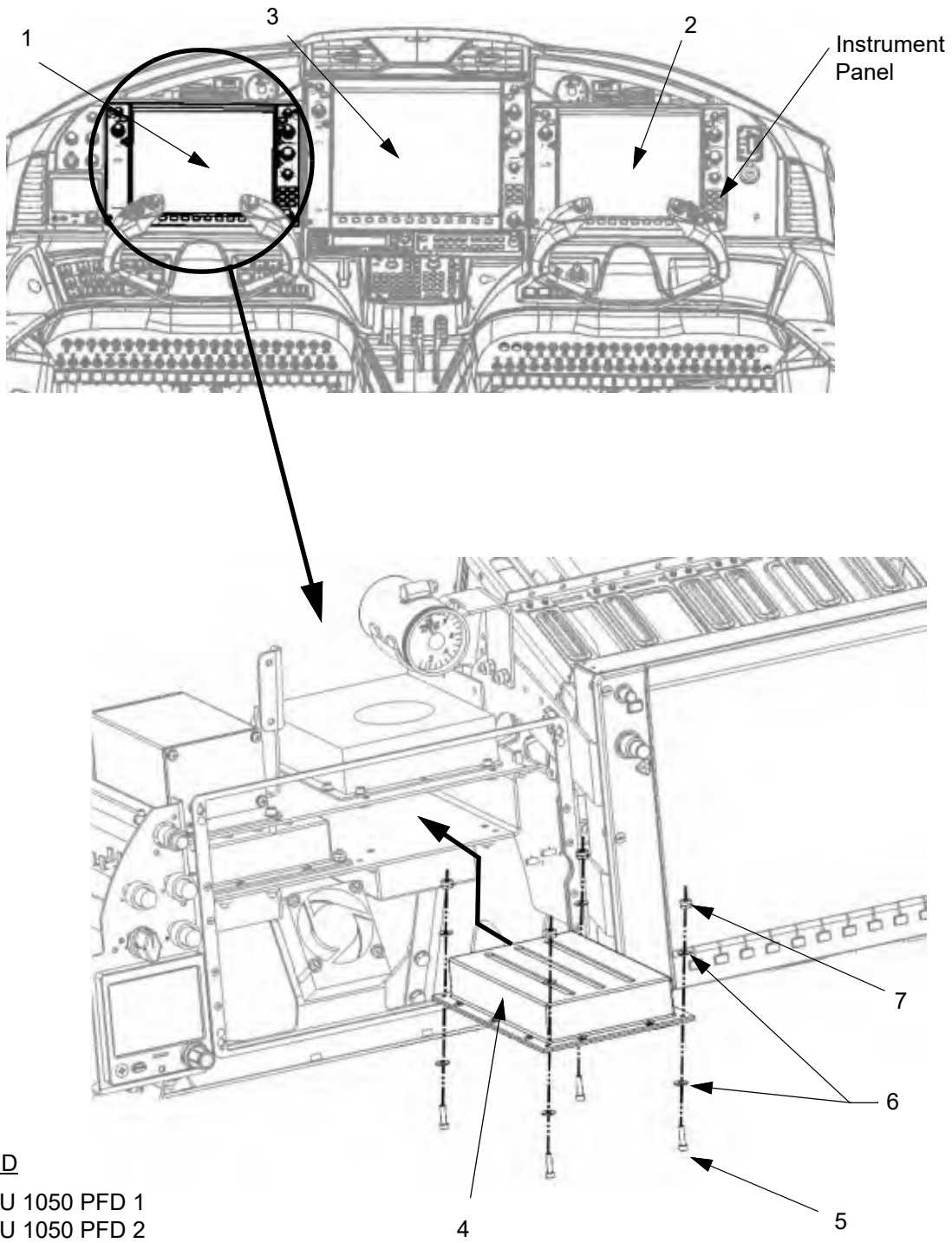

LEGEND

1. GDU 1050 PFD 1
2. GDU 1050 PFD 2
3. GDU 1250 MFD
4. Temperature Controller
5. Socket Head Screw
6. Washer
7. Locknut

K. Intercooler Leak Check

Note: This test is provided to assist in determining is a leak is present in an intercooler. Any evidence of a leak should be considered a failure and the intercooler should be replaced.

(1) Remove the intercooler from the airplane.
(2) Cap the outlet side of the intercooler.

Note: The primary intercooler can be capped using a -12 AN cap. The secondary intercooler utilizes hose bead connections and a suitable cap must be fabricated locally.

(3) Install an air fitting on the inlet side of the intercooler.

Note: The air fitting must be adapted to the intercooler inlet. The primary intercooler uses a -12 AN fitting and the secondary uses a 1.5” hose bead.

(4) Using a compressed air source, pressurize the intercooler to 10 psi.
(5) Submerge the intercooler in water and inspect for leaks.
    (a) If leaks are found, replace the intercooler.
    (b) If leaks are not found, reinstall the intercooler in the airplane.

PRESSURIZATION CONTROL

1. Description

Cabin pressure is maintained using a pressurization system of two outflow valves, a controller, and a forced air source drawn from the engine bleed air. Before entering the cabin, the bleed air is cooled using an air-to-air heat exchanger. The outflow valves and their controller are mounted to the pressure bulkhead access panel aft of the rear passenger seats.

2. Maintenance Practices

A. Pressure Bulkhead Access Panel

(1) Removal

(a) Remove the rear passenger seats (refer to Chapter 25-20).

(b) Remove the aft pressure bulkhead finish panel (refer to Chapter 25-50).

(c) Disconnect the wiring harness from the pressurization outflow valves controller.

(d) Disconnect the static system tubing as needed to remove the panel.

(e) Remove the bolts and washers attaching the access panel to the pressure bulkhead.

CAUTION: At initial installation, a custom seal is created between the flange of the pressure bulkhead access panel and the pressure bulkhead. The seal will be attached to the access panel. Use caution not to damage the seal or bulkhead during removal of the panel. Only use non-metallic tools if prying is required.

(f) Remove the access panel.

(2) Installation

(a) Inspect the seal for damage or deterioration.

(i) Cracking in the seal is allowed as long as the cracking does not cause leakage, extend across the entire width of the seal, or in any way compromise the seal integrity.

(ii) Refer to 21-30.2-A(3) if the seal requires repair.

(b) Apply release material to the aft pressure bulkhead mating surface.

Note: Finish Kare 1000 is the preferred release material, PTM&W PA 0801 is also acceptable.

(c) Put the access panel in position.

(d) Install the bolts and washers attaching the access panel to the pressure bulkhead.

(e) Torque the bolts to 28 - 34 in-lbs in a criss-cross pattern.

CAUTION: Make sure the static system tubes are fully engaged in the fittings, the union tee locking collar is in the locked position and tube cannot be pulled out. The pressurization system may not operate correctly if the static tubes are not correctly seated.

(f) Connect the static system tubing.

(g) Connect the wiring harness to the pressurization outflow valves controller.

(h) Check the pressurization system as follows:

(i) Connect a ground power unit to the airplane (refer to Chapter 24-40).

(ii) Set the BATT 1 and BATT 2 switches to ON.

(iii) On the MFD, make sure the CABIN, DIFF P, and C RATE indications do not show a red X.

(i) If a new seal was installed or seal repair was performed, do the steps that follow:

(i) Do the Cabin Pressurization Test (21-30.N).

(ii) Re-torque the bolts attaching the access panel to the pressure bulkhead to 28 - 34 in-lbs.

(j) Install the rear passenger seats (refer to Chapter 25-20).

(k) Install the aft pressure bulkhead finish panel (refer to Chapter 25-50).

(3) Pressure Bulkhead Access Panel Seal Repair

CAUTION: Only use non-metallic scrapers to remove sealant, metal scrapers could damage the carbon plies.

(a) Carefully clean all the damaged area of sealant from the pressure bulkhead access panel flange.

(b) Thoroughly clean the affected area of the access panel flange, adjacent sealant, and mating surface of the aft pressure bulkhead with isopropyl alcohol.

(c) Apply release material to the aft pressure bulkhead mating surface.

Note: Finish Kare 1000 is the preferred release material, PTM&W PA 0801 is also acceptable.

(d) Apply AC 240 B-1/2 or PR 1425 B-1/2 to the reworked portion of the seal.

Note: Use enough sealant to obtain a finished seal thickness of between 0.050 - 0.250 inches.

(e) Place 0.050” bond rods on the access panel flange where new sealant is applied to maintain the minimum 0.050” seal thickness when the panel is installed on the bulkhead.

(f) Ensure any bolt holes are clear of sealant.

(g) Put the access panel in position on the bulkhead.

(h) Install the bolts and washer finger tight in a criss-cross pattern. Do not fully tighten the bolts.

(i) Allow the sealant to cure.

(j) Remove the bolts and washers and carefully remove the access panel.

(k) Carefully clean the excess sealant from the edges of the access panel.

Note: Leave the release material in place.

(l) Install the pressure bulkhead access panel 21-30.2-A(2).

(4) Pressure Bulkhead Access Panel Seal Replacement

CAUTION: Only use non-metallic scrapers to remove sealant, metal scrapers could damage the carbon plies.

(a) Carefully clean all the old sealant from the pressure bulkhead access panel flange.

(b) Thoroughly clean the access panel flange and mating surface of the aft pressure bulkhead with isopropyl alcohol.

(c) Apply release material to the aft pressure bulkhead mating surface. Make sure the release material extends beyond the outer edge of the access panel.

Note: Finish Kare 1000 is the preferred release material, PTM&W PA 0801 is also acceptable.

(d) Apply AC 240 B-1/2 or PR 1425 B-1/2 to the flange of the access panel (Figure 21-30.1: Pressure Bulkhead Access Panel Sheet 2).

Note: Use enough sealant to obtain a finished seal thickness of between 0.050 - 0.250 inches.

(e) Place 0.050” bond rods around the circumference of the access panel flange to maintain the minimum 0.050” seal thickness when the panel is installed on the bulkhead.

(f) Ensure the bolt holes are clear of sealant.

(g) Put the access panel in position on the bulkhead.

(h) Install the bolts and washer finger tight in a criss-cross pattern. Do not fully tighten the bolts.

(i) Allow the sealant to cure.

(j) Remove the bolts and washers and carefully remove the access panel.

(k) Carefully clean the excess sealant from the edges of the access panel.

Note: Leave the release material in place.

(l) Install the pressure bulkhead access panel 21-30.2-A(2).

Figure 21-30.1: Pressure Bulkhead Access Panel (Sheet 1 of 2)

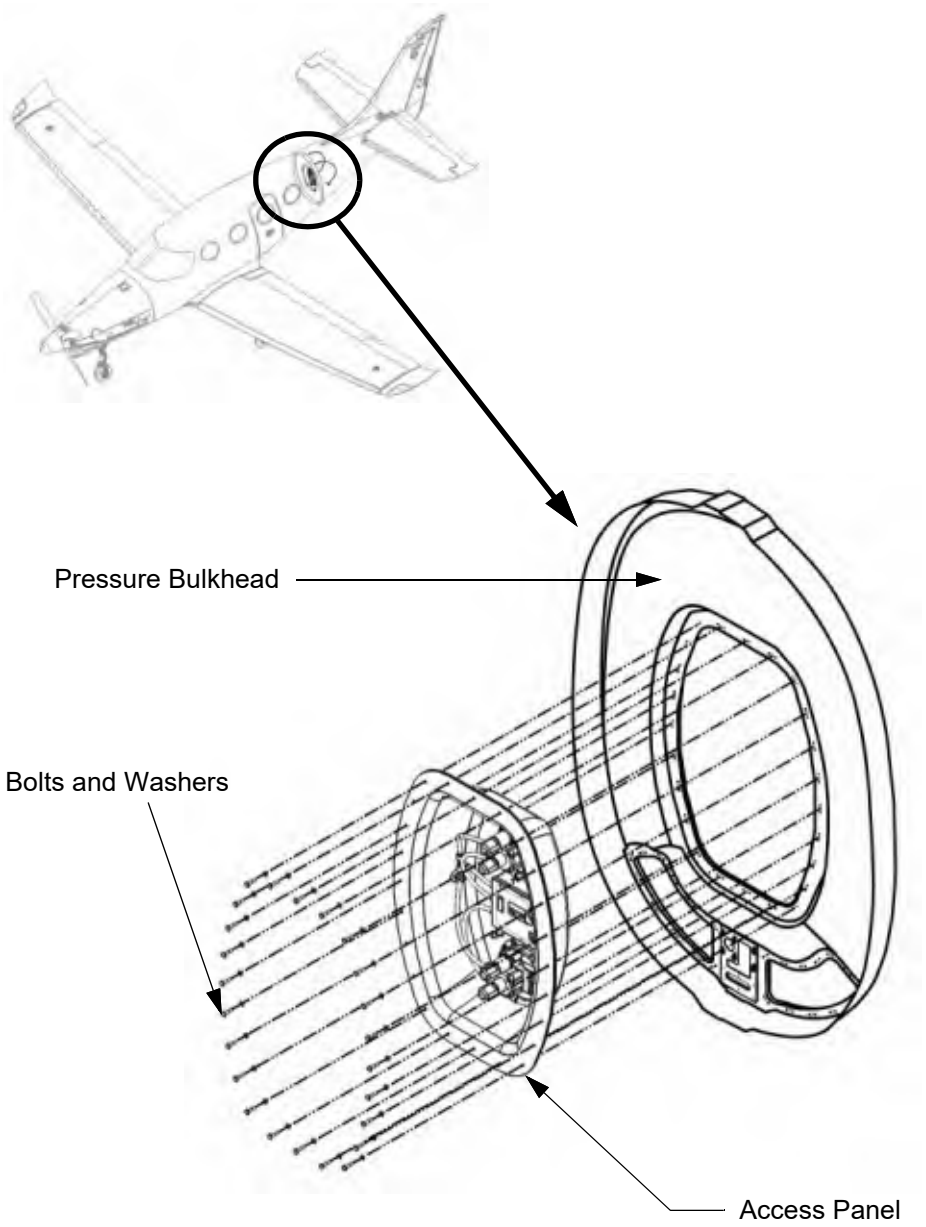

Figure 21-30.1: Pressure Bulkhead Access Panel (Sheet 2 of 2)

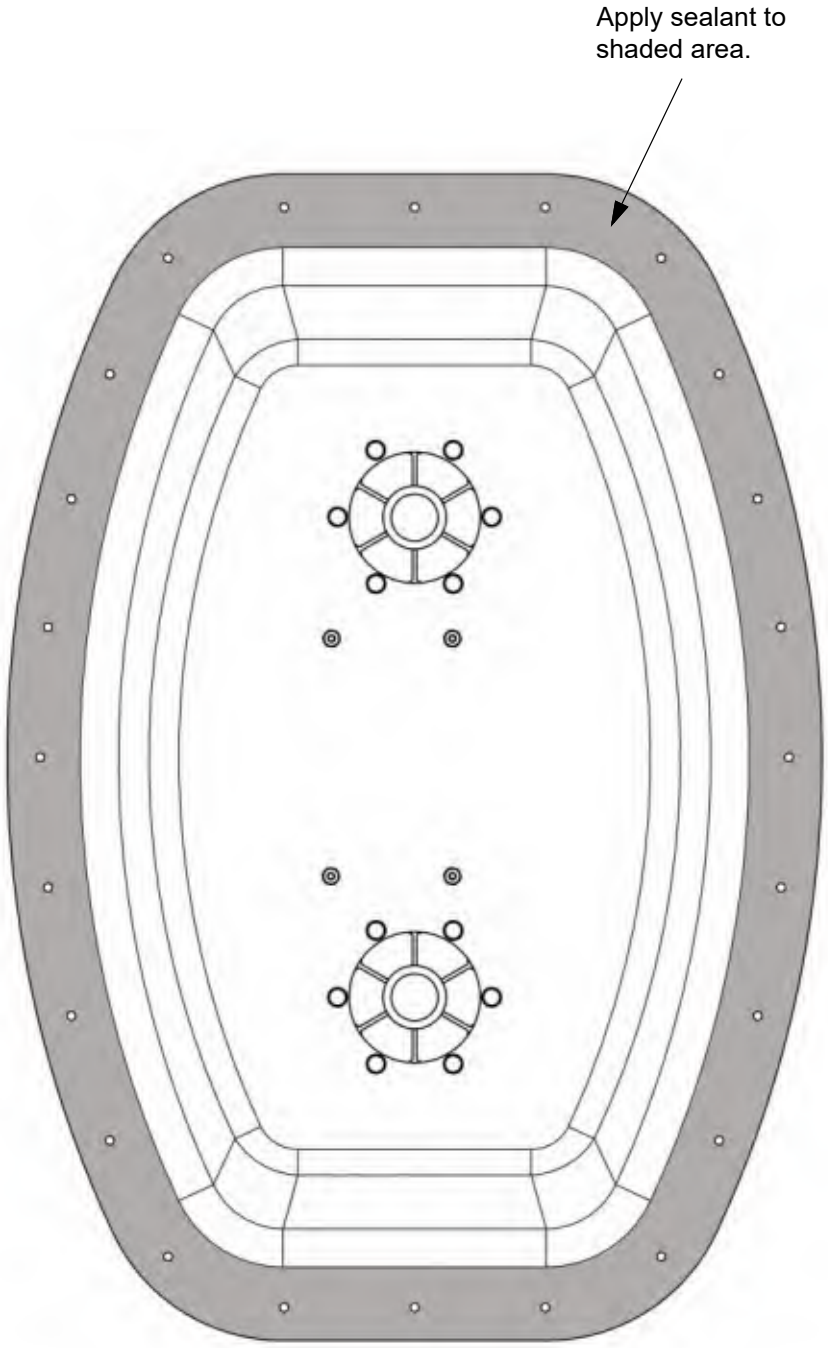

B. Tubing

(1) Removal

(a) Press and hold the release button fully.

(b) Remove the tubing. Cap or plug the outflow valves, controller, and fittings as necessary to keep contamination from entering the system.

(2) Installation

(a) Cut the tubing to length. Ensure the ends of the tubing are square. Remove any burrs.

(b) Clean and dry the tubing using isopropyl alcohol.

(c) Inspect the ends of the tubing for surface defects which will prevent the fitting from sealing correctly.

Note: It is normal to see a circumferential mark where the grab ring on the fitting holds the tubing if the tubing was used in a previous installation.

(d) Ensure the tube support is fully inserted into the tubing end.

(e) Push the tube into the fitting until it bottoms out.

C. Outflow Valve(s) - Valve Housing Only

Note: After installation on the pressure bulkhead access panel, the outflow valve mounting gasket will become adhered to the panel and may be difficult or impossible to remove by hand.

It is much easier to replace a faulty outflow valve by separating the valve body from its grill than by removing the entire assembly from the bulkhead. Refer to the current revision of the Kollsman KAPS II Operation and Description Manual S2119.

(1) Removal

(a) Remove the rear passenger seats (refer to Chapter 25-20).

(b) Remove the interior panel in front of the pressure bulkhead.

(c) Disconnect the tubing from the outflow valve(s) to be removed.

(d) Note the orientation of the outflow valve(s).

(e) Cut then remove the safety wire on the three screws attaching the outflow valve body to the grill.

(f) Remove the screws while preventing the valve housing from falling off the bulkhead mounted grill.

(g) Remove the valve housing.

(2) Installation

(a) Ensure the valve grill is mounted on the bulkhead.

(b) Put the valve housing in position over the grill and align the screw holes.

(c) Apply anti-seize compound to the screws then install the screws while holding the valve housing against the grill.

(d) Torque the screws to 16 +/- 1 in.-lbs.

(e) Safety wire the screws in accordance with the latest revision of the Kollsman KAPS II Operation and Description Manual S2119.

(f) Install the interior panel (refer to Chapter 25-50).

(g) Install the rear passenger seats (refer to Chapter 25-20).

Figure 21-30.2: Outflow Valve Housing

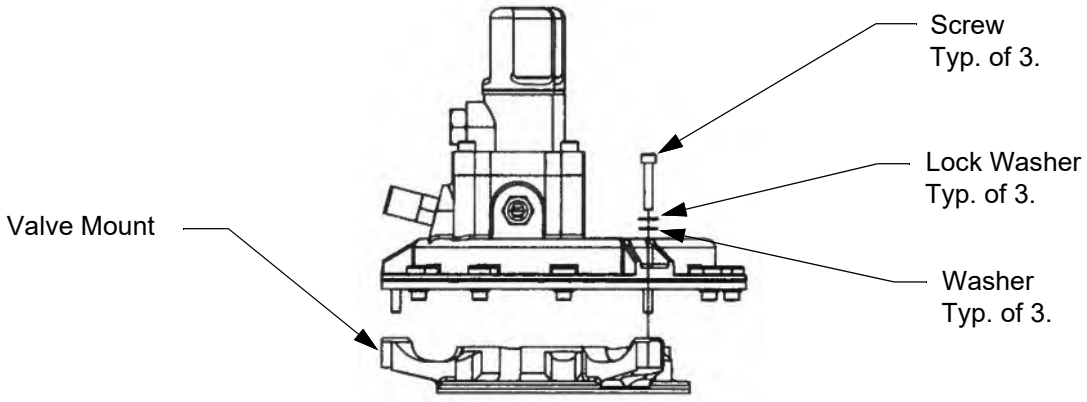

D. Outflow Valve(s) - Entire Assembly

Note: After installation on the airplane, the outflow valve mounting gasket will become adhered to the pressure bulkhead access panel and may be difficult or impossible to remove by hand.

Removal of the entire outflow valve assembly is much more difficult than removal of the valve housing only and requires removal of the pressure bulkhead access panel. Only remove the entire outflow valve assembly if it is absolutely necessary.

(1) Removal

(a) Remove the rear passenger seats (refer to Chapter 25-20).

(b) Remove the interior panel in front of the pressure bulkhead (refer to Chapter 25-50).

(c) Remove the bolts and washers attaching the access panel to the pressure bulkhead.

(d) Remove the access panel.

(e) Disconnect the tubing from the outflow valve(s) to be removed.

(f) Note the orientation of the outflow valve for re-installation then remove the bolts and washers attaching the outflow valve to the access panel.

(g) Remove the outflow valve(s). If the valve must be forcibly removed from the bulkhead, use the following guidelines to minimize the risk of damage.

1. Use non-metallic pry bars or tools. If a metallic tool must be used, wrap the end with tape to prevent damage to the outflow valve and the bulkhead.
2. Pry upwards only at the 3 locations shown directly under the mounting flange supports between the mounting flange support and the bulkhead.

Figure 21-30.3: Outflow Valve Assembly

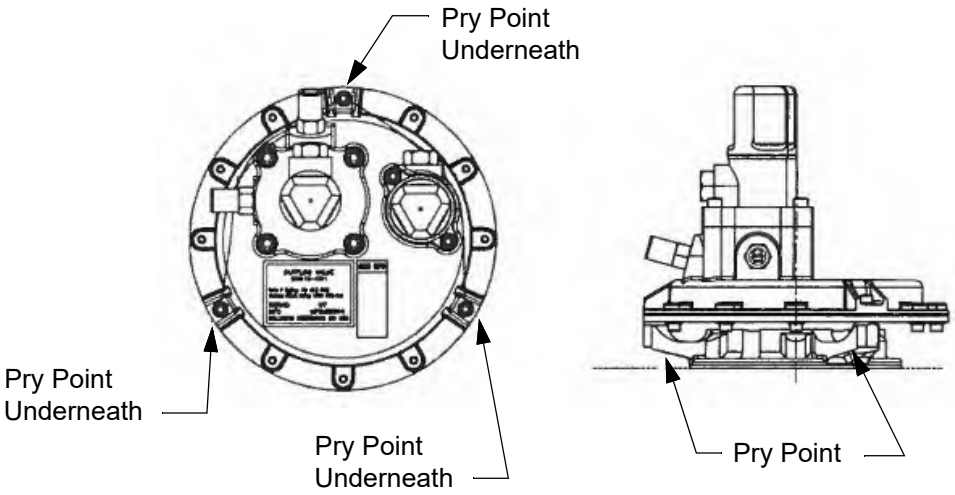

3. After removal, inspect the orange diaphragm on the outflow valve for any damage caused during removal.

Figure 21-30.4: Outflow Valve Installation

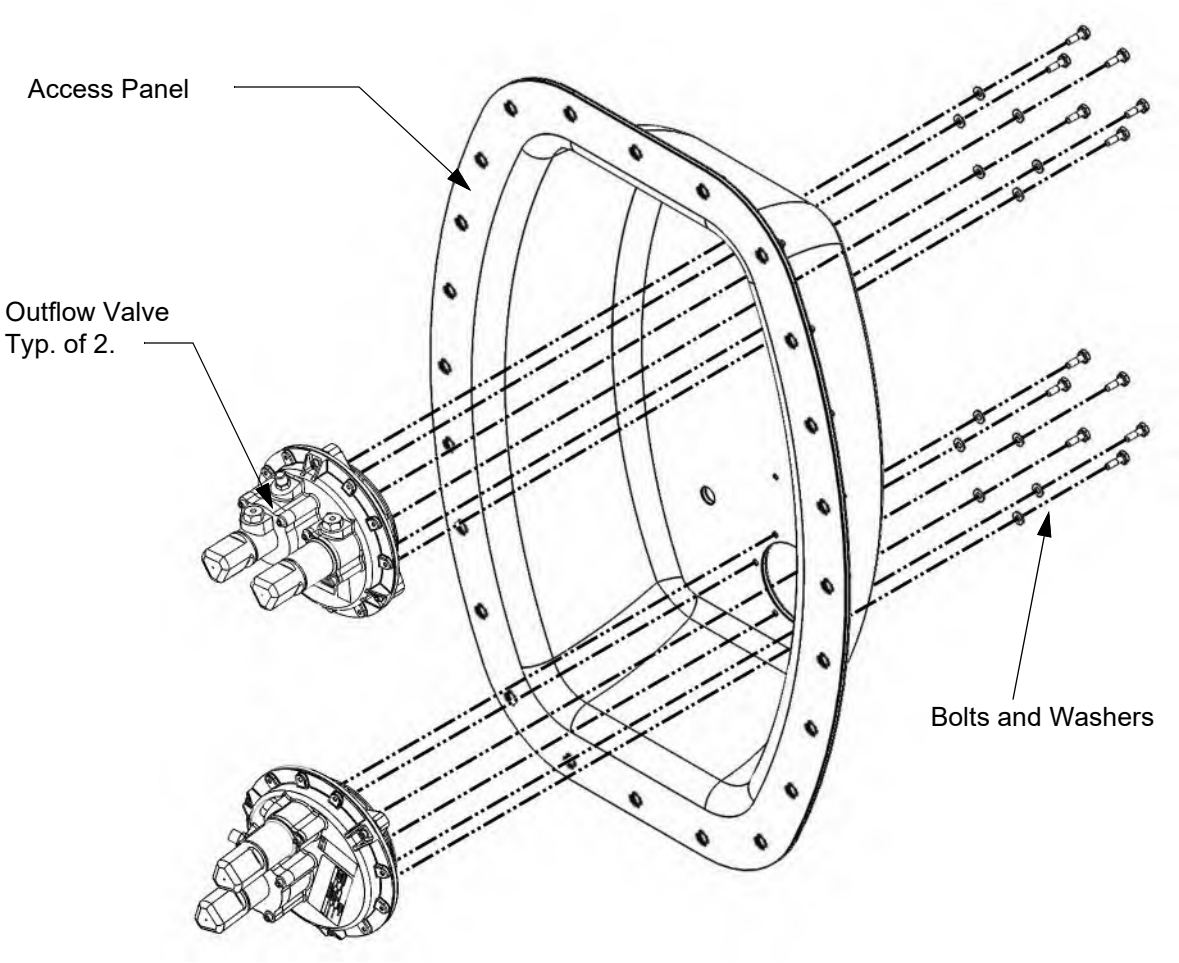

(2) Installation

(a) Hold the outflow valve(s) in position against the pressure bulkhead access panel then attach it using bolts and washers.

(b) Torque the bolts to 8-12 in.-lbs.

(c) Safety wire the bolts with MS20995C32.

(d) Attach the tubing to the outflow valve(s).

(e) Attach the access panel to the pressure bulkhead.

(f) Install the interior panel (refer to Chapter 25-50).

(g) Install the rear passenger seats (refer to Chapter 25-20).

E. Outflow Valve Controller

(1) Removal

(a) Remove the rear passenger seats (refer to Chapter 25-20).

(b) Remove the interior panel in front of the pressure bulkhead (refer to Chapter 25-50).

(c) Remove the bolts and washers attaching the access panel to the pressure bulkhead.

(d) Remove the access panel.

Note: At initial installation, a custom seal is created between the flange of the pressure bulkhead access panel and the pressure bulkhead using AC 240 B-1/2 manufactured by 3M Corp or PR-1425 B-1/2 manufactured by PRC-DeSoto International, Inc. The seal will be attached to the access panel. Do not damage the seal during removal of the panel.

(e) Disconnect the tubing from the outflow valve controller.

(f) Remove the socket head cap screws, washers, and locknuts attaching the controller to the pressure bulkhead access panel.

(g) Remove the controller.

(2) Installation

(a) Hold the outflow valve in position against the pressure bulkhead access panel then attach it using socket head cap screws, washers, and locknuts.

(b) Attach the tubing to the controller.

(c) Attach the access panel to the pressure bulkhead.

(d) Install the interior panel (refer to Chapter 25-50).

(e) Install the rear passenger seats (refer to Chapter 25-20).

Figure 21-30.5: Outflow Valve Controller Installation

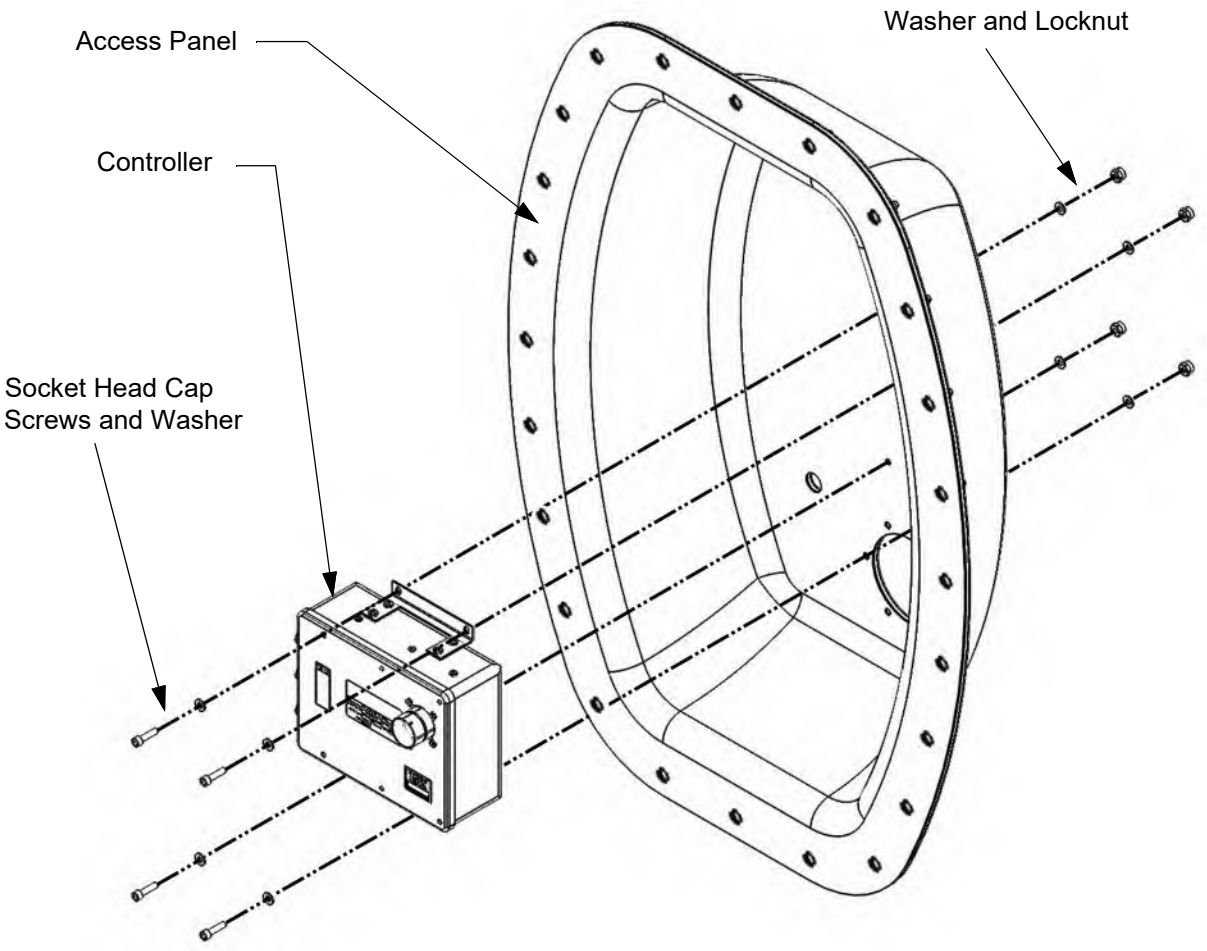

Figure 21-30.6: Tube Routing - Outflow Valves and Controller (Sheet 1 of 2)

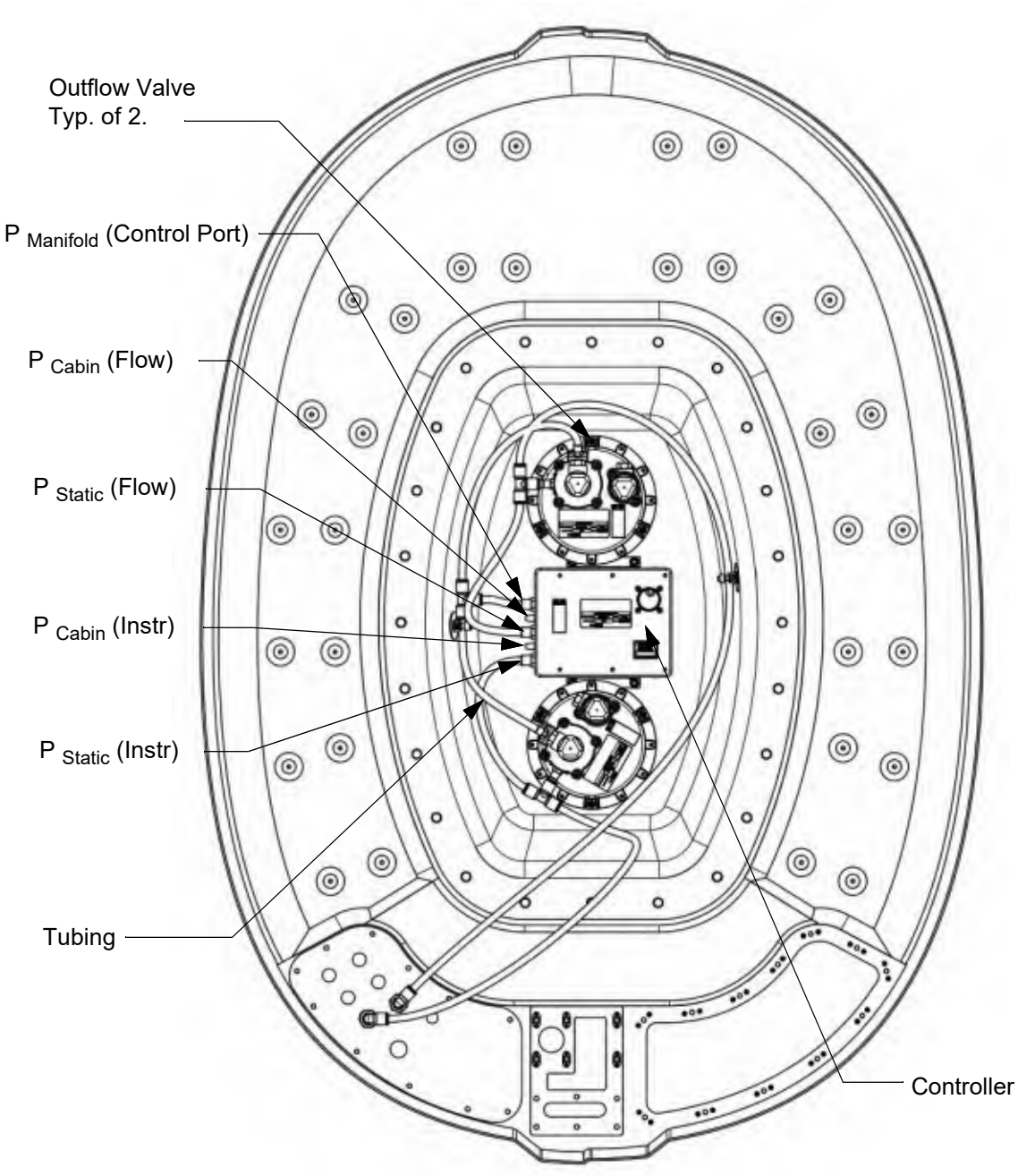

Figure 21-30.6: Tube Routing - Outflow Valves and Controller (Sheet 2 of 2)

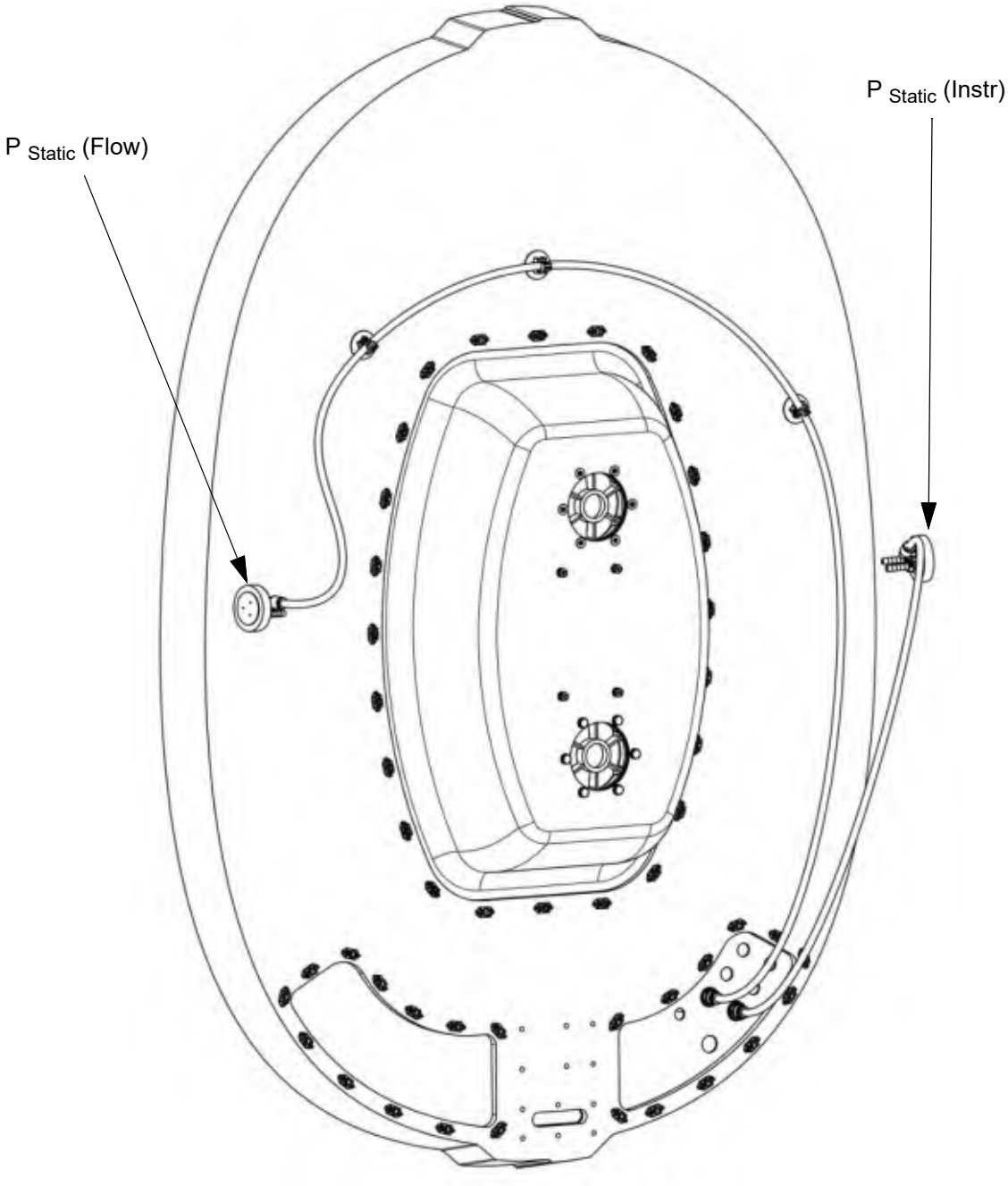

F. Mass Flow Valve

(1) Removal

(a) Remove the cowling (refer to Chapter 71-10).

(b) Disconnect the wiring harness from the mass flow valve.

(c) Remove the hose clamps securing the ambient air in to mass flow valve hose, Disconnect the hoses attached to the inflow and the outflow sides of the mass flow valve.

(d) Remove the three bolts, washers, and nuts attaching he mass flow valve to the ECS bracket.

(e) Disconnect the solenoid shutoff valve from the elbow fitting attached to the mass flow valve.

(f) Remove the elbow fitting from the mass flow valve.

(g) Remove the mass flow valve.

(h) Cap or plug all ports in the mass flow valve.

(2) Installation

(a) Install the elbow fitting into the mass flow valve.

(b) Connect the solenoid shutoff valve to the elbow fitting.

(c) Attach the mass flow valve to the ECS bracket using bolts, washers, and nuts.

(d) Connect the hoses to the inflow and outflow sides of the mass flow valve.

(e) Connect the wiring harness to the mass flow valve.

(f) Install the cowling (refer to Chapter 71-10).

Figure 21-30.7: Mass Flow Valve

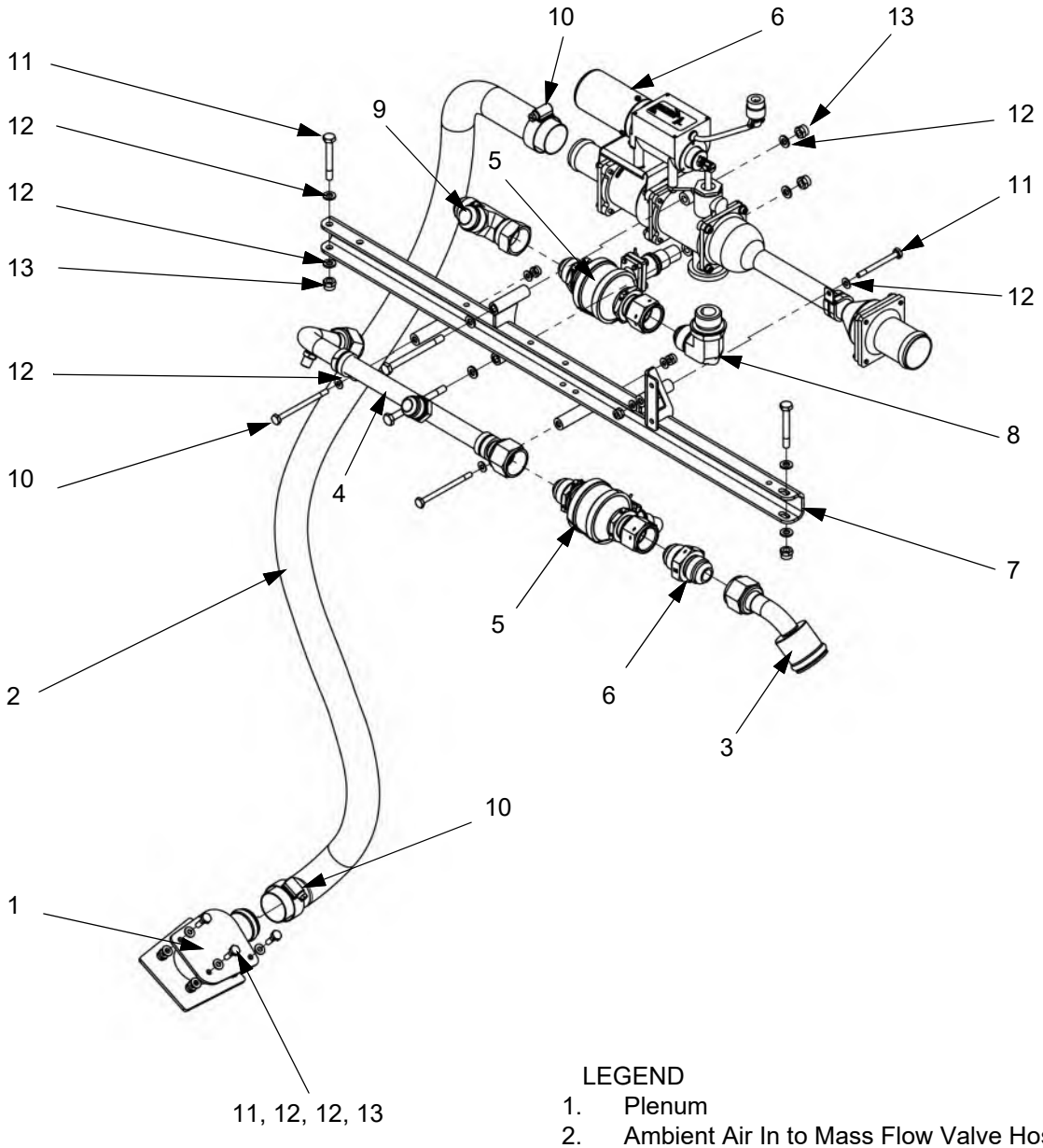

LEGEND

1. Plenum
2. Ambient Air In to Mass Flow Valve Hose
3. Emergency Pressure Circulation Fitting
4. ECS Manifold
5. Solenoid Shutoff Valve
6. Sonic Nozzle
7. Bracket
8. 90° Fitting
9. Tee Fitting
10. Hose Clamp
11. Bolt
12. Washer
13. Locknut

G. Mass Flow Sensor Controller

The mass flow sensor controller works in coordination with the mass flow controller and the mass flow sensor to manipulate output of P3 air from the mass flow valve for pressurization of the airplane cabin. The mass flow valve normally outputs 5 lbs./min. and can be controlled to provide 8 lbs./min. in an emergency or no flow when depressurization is required upon landing.

Note: If the mass flow sensor or the mass flow sensor controller are to be replaced, they must be replaced as a matched set by serial number.

(1) Removal

(a) Remove PFD 1 (refer to Chapter 34-40).

(b) Remove the locknuts and washers that attach the controller to the instrument panel.

(c) Carefully pull the controller forward then disconnect the wiring harness.

(d) Remove the controller.

(2) Installation

(a) Inspect the wiring connectors to ensure there are no bent or damaged pins. Repair any damage.

(b) Connect the wiring harness to the back of the mass flow sensor controller.

(c) Attach the controller to the instrument panel using washers and locknuts.

(d) Install PFD 1 (refer to Chapter 34-40).

Figure 21-30.8: Mass Flow Sensor Controller

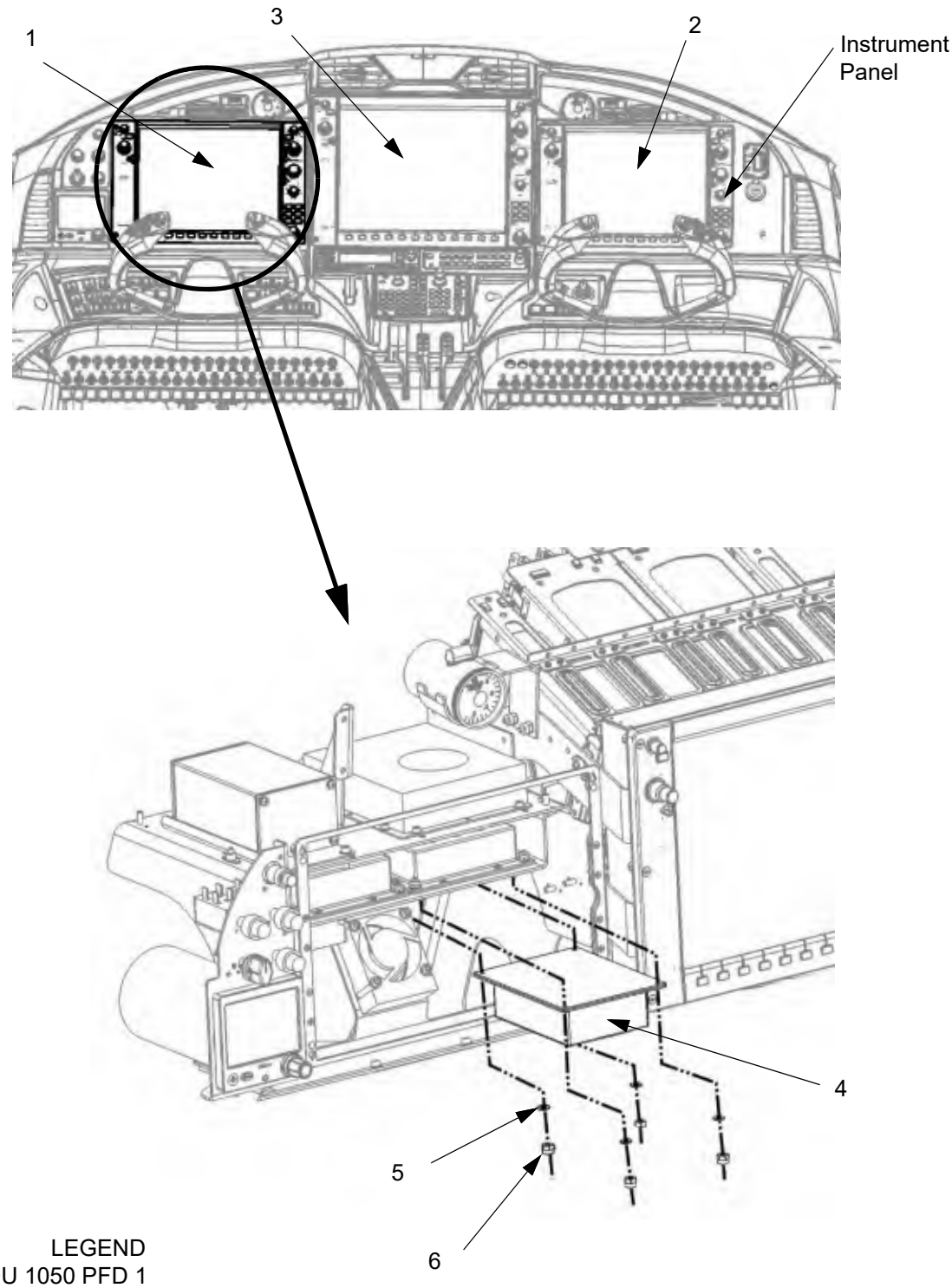

LEGEND

1. GDU 1050 PFD 1
2. GDU 1050 PFD 2
3. GDU 1250 MFD
4. Mass Flow Sensor Controller
5. Washer
6. Locknut

H. Mass Flow Controller

The mass flow controller works in coordination with the mass flow sensor and the mass flow sensor controller to manipulate output of P3 air from the mass flow valve for pressurization of the airplane cabin. The mass flow valve normally outputs 5 lbs/min and can be controlled to provide 8 lbs/min in an emergency or no flow when depressurization is required upon landing.

(1) Removal

(a) Remove PFD 1 (refer to Chapter 34-40).

(b) Remove the socket head screws, washers, and locknuts that attach the controller to the instrument panel.

(c) Carefully pull the controller forward then disconnect the wiring harness.

(d) Remove the controller.

(2) Installation

(a) Inspect the wiring connectors to ensure there are no bent or damaged pins. Repair any damage.

(b) Connect the wiring harness to the back of the mass flow sensor controller.

(c) Attach the controller to the instrument panel using socket head screws, washers and locknuts.

(d) Install PFD 1 (refer to Chapter 34-40).

Figure 21-30.9: Mass Flow Controller

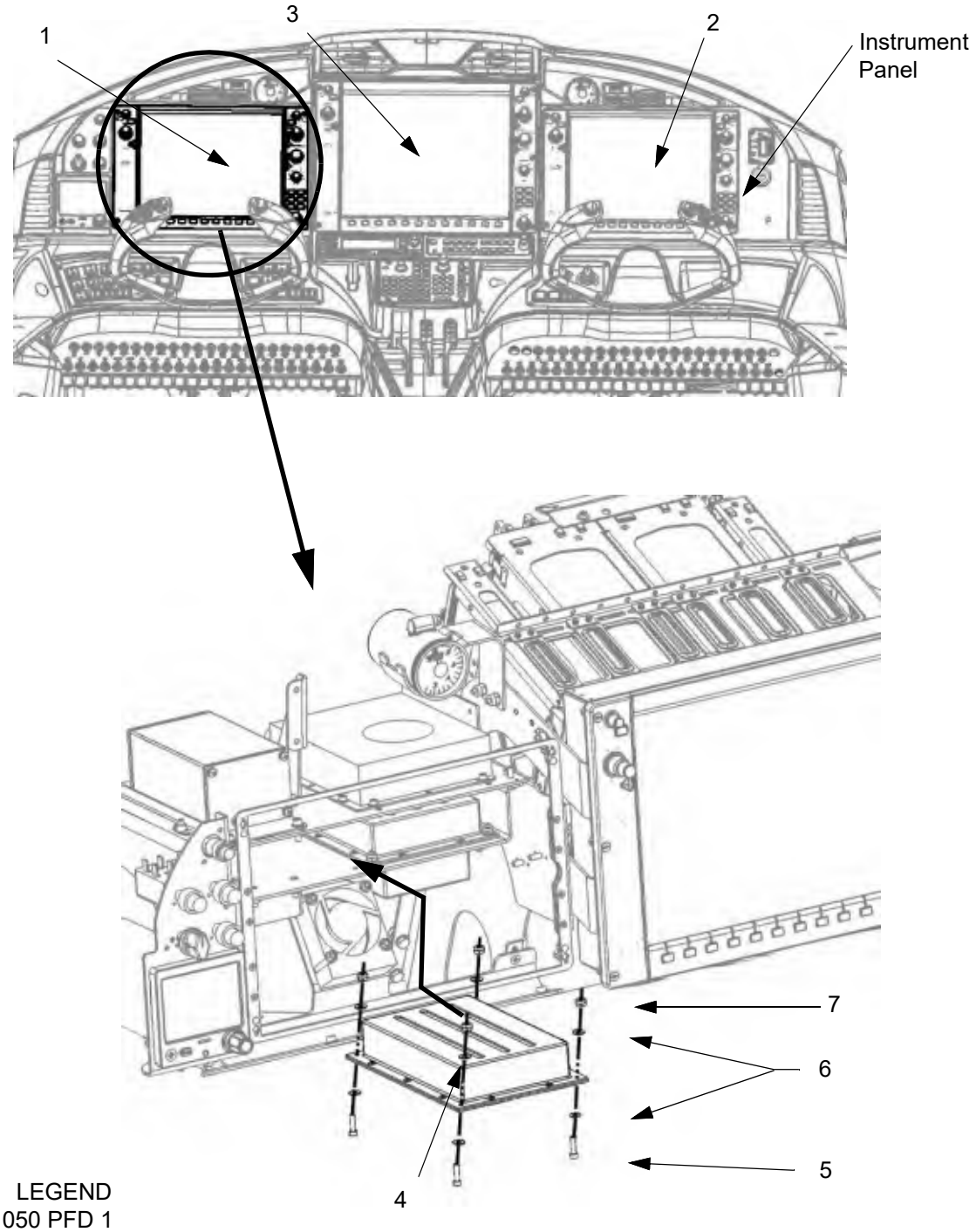

LEGEND

1. GDU 1050 PFD 1
2. GDU 1050 PFD 2
3. GDU 1250 MFD
4. Mass Flow Controller
5. Socket Head Screw
6. Washer
7. Locknut

I. Cabin Altitude Pressure Switch

The cabin altitude pressure switch is actuated by ambient air pressure and causes the Garmin G1000 NXi Integrated Avionics System to display the CAS message CABIN ALT HIGH when cabin altitude is over 10100 ft.

(1) Removal
   (a) Remove PFD 2 (refer to Chapter 34-40).
   (b) Tag then disconnect the cabin altitude pressure switch wiring from the instrument panel wiring harness.
   (c) Remove the locknuts and washers that attach the cabin altitude pressure switch to the instrument panel.
   (d) Remove the cabin altitude pressure switch.

(2) Installation
   (a) Inspect the wiring connectors to ensure there are no bent or damaged pins. Repair any damage.
   (b) Connect the cabin altitude pressure switch wiring to the instrument panel wiring harness.
   (c) Attach the cabin altitude pressure switch to the instrument panel using washers and locknuts.
   (d) Install PFD 2 (refer to Chapter 34-40).

(3) Functional Test
Do a functional test of the cabin altitude pressure switch every 10000 hours. Replace the switch as necessary.

CAUTION: The cabin altitude pressure switch can be irreparably damaged if it is dropped or the electrical leads are pulled.

   (a) Remove the cabin altitude pressure switch.
   (b) Get a bell jar or make a container for use as a vacuum vessel.
      (i) Get a container capable of being airtight with a removable lid.
      (ii) Drill two 1/2” holes in the lid.
      (iii) Apply RTV 100 sealant to bulkhead union fittings and the lid mating surfaces.
      (iv) Install the union fittings through the drilled holes in the lid then secure them using jam nuts. Cure the sealant in accordance with the sealant manufacturer’s instructions.
      (v) Thread two 10” electrical wires through one of the bulkhead fittings ensuring approximately 5 inches of the wires remain on both sides of the lid.
      (vi) Seal the bulkhead fitting around the wires using RTV100 sealant then let the sealant cure in accordance with the sealant manufacturer’s instructions.

(vii) Install the lid on the container then do a leakage test by attaching a vacuum equal to an altitude of 14500 ft (4420 m).

(viii) Shut off the vacuum then observe the container for approximately 5 minutes to ensure no loss of vacuum.

(ix) Decrease the vacuum to zero then disconnect the vacuum source.

(c) Connect the two wires through the vacuum vessel lid to the appropriate wires on the cabin altitude pressure switch then put the cabin altitude pressure switch into the vacuum vessel.

(d) Connect a continuity tester to the appropriate switch wires.

(e) Carefully apply a vacuum and verify the switch actuates on increasing altitude of 10000 to 10500 ft.

CAUTION: Do not exceed 14500 ft altitude.

(f) Verify the switch resets on decreasing altitude before 9000 ft.

(g) Slowly decrease vacuum in the vacuum vessel to zero.

(h) Disconnect the continuity tester.

(i) Remove the cabin altitude pressure switch from the pressure vessel.

(j) Install the cabin altitude pressure switch if it functions properly otherwise install a new cabin altitude pressure switch.

Figure 21-30.10: Cabin Altitude Pressure Switch

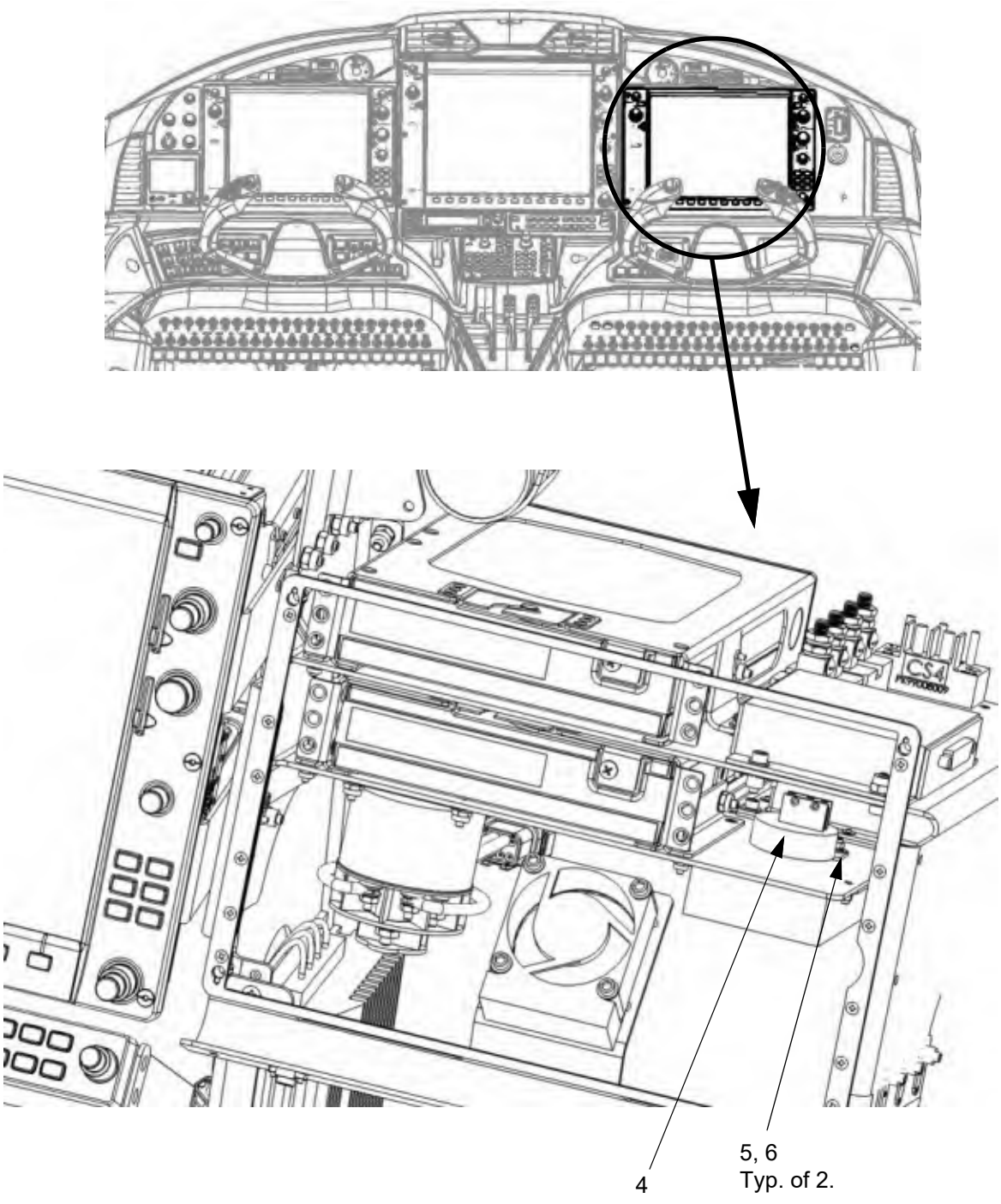

J. Emergency Pressurization Airflow Test

(1) Preferred Method:

(a) Pull the SPS COMP 1A, SPS COMP 1B, SPS COMP 2A, SPS COMP 2B, GEAR CONTROL, L PITOT HEAT, L PITOT HT CTRL, L STALL HEAT, R STALL HEAT, R PITOT HEAT, R PITOT HT CTRL, and PUSHER circuit breakers.

(b) Make sure the EMERG PRESS circuit breaker is IN.

(c) Connect external power (refer to 24-40).

(d) Remove the upper engine cowling (refer to Chapter 71-10).

(e) Connect a pressurization air source to the aircraft via the P3 air line, prior to the solenoid shutoff valve (Figure 21-03.11).

(f) Set the BATT 1 and BATT 2 switches to ON.

(g) Make sure the EMERG PRESS circuit breaker is IN.

(h) Put the aircraft in a weight-off-wheels configuration.

(i) Make sure the PRESS AIR switch is set to off.

Note: The CAS message "PRESS AIR OFF" should be illuminated on the PFD.

(j) Press the EMERG PRESS AIR switch. The switch should illuminate "EMERG PRESS AIR ON".

(k) Verify airflow from the heat/pressurization vents on the floor.

(l) Set the BATT 1 and BATT 2 switches to OFF.

(m) Put the aircraft in a weight-on-wheels configuration.

(n) Disconnect the pressurization air source from the aircraft and reconnect the bleed air line. Perform a leak check of the bleed air line.

(o) Install the upper engine cowling (refer to Chapter 71-10).

(p) Reset the SPS COMP 1A, SPS COMP 1B, SPS COMP 2A, SPS COMP 2B, GEAR CONTROL, L PITOT HEAT, L PITOT HT CTRL, L STALL HEAT, R STALL HEAT, R PITOT HEAT, R PITOT HT CTRL, and PUSHER circuit breakers.

(2) Alternate Method:

(a) Put the airplane in an appropriate run-up area.

CAUTION: Make sure the landing gear handle is in the down position and all three landing gear have green down and locked indications.

(b) Pull the SPS COMP 1A, SPS COMP 1B, SPS COMP 2A, SPS COMP 2B, GEAR CONTROL, L PITOT HEAT, L PITOT HT CTRL, L STALL HEAT, R STALL HEAT, R PITOT HEAT, R PITOT HT CTRL, and PUSHER circuit breakers.

(c) Make sure the EMERG PRESS circuit breaker is IN.

(d) Start the engine (refer to chapter 71-00 or the latest revision of the AFM).

(e) Set the right weight-on-wheels switch to the in-the-air mode.

(f) Press the PRESS AIR switch. The CAS message “PRESS AIR OFF” should illuminate on the PFD.

(g) Press the EMERG PRESS AIR switch. The switch should illuminate “EMERG PRESS AIR ON”.

(h) Verify airflow from the heat/pressurization vents on the floor.

(i) Shut down the engine (refer to chapter 71-00 or the latest revision of the AFM).

(j) Reset the SPS COMP 1A, SPS COMP 1B, SPS COMP 2A, SPS COMP 2B, GEAR CONTROL, L PITOT HEAT, L PITOT HT CTRL, L STALL HEAT, R STALL HEAT, R PITOT HEAT, R PITOT HT CTRL, and PUSHER circuit breakers.

K. Ground Fresh Air Fan Test

(1) Connect external power (refer to 24-40).
(2) Make sure FRESH AIR CTRL and FRESH AIR FAN circuit breakers are IN.
(3) Set the BATT 1 and BATT 2 switches to ON.
(4) Press the GROUND FRESH AIR switch. The switch should illuminate “GROUND FRESH AIR ON”.
(5) Verify airflow from the vents on the floor.
(6) Press the GROUND FRESH AIR switch. Make sure “GROUND FRESH AIR ON” extinguish and airflow from the vents on the floor stops.
(7) Set the BATT 1 and BATT 2 switches to OFF.
(8) Disconnect external power (refer to 24-40).

L. Windshield Defrost Test

(1) Connect external power (refer to 24-40).
(2) Ensure the PRESS CTRL 1, PRESS CTRL 2, MASS FLOW, FRESH AIR CTRL, FRESH AIR FAN, and DEFROST circuit breakers are IN.
(3) Set the BATT 1 and BATT 2 switches to ON.
(4) Press the GROUND FRESH AIR switch. The switch should illuminate “GROUND FRESH AIR ON”.
(5) Press the DEFROST switch. The switch should illuminate “DEFROST ON”.
(6) Verify airflow across the interior of the windscreen.
(7) Press the DEFROST switch. Make sure “DEFROST ON” extinguishes and airflow across the interior of the windscreen stops.
(8) Set the BATT 1 and BATT 2 switches to OFF.
(9) Disconnect external power (refer to 24-40).

M. Passive Door Seal Inspection

(1) Visually inspect the fuselage portion of the passive door seal for any nicks, cuts, disbonds, or excessive wear. Clear any debris accumulation between the active and passive door seals. Nicks and cuts smaller than 1/4" in length are acceptable. Disbonds that allow air penetration must be repaired.
(2) Inspect the hinge seal portion for nicks, cuts, disbonds, or excessive wear. Ensure the seal overlaps the passive door seal when the door is closed. Minor damage including nicks, cuts, tears, and abrasions that do not affect the airtight seal are allowed. Replace if necessary.

N. Cabin Pressurization Test

WARNING: Do not stand in front of or attempt to open the main cabin door or emergency exit of the aircraft while the aircraft is pressurized.

WARNING: The safety strap or net must be installed on the cabin door and emergency exit when the aircraft is pressurized.

WARNING: No personnel are allowed inside the cabin while the aircraft is being pressurized for this test.

CAUTION: Only use calibrated instruments when performing this test. Exceeding the specified pressure limit can cause serious damage to the aircraft.

CAUTION: Do not exceed 6.7 psi while pressurizing the aircraft.

Note: Minor cracking or popping sounds may be heard from the fuselage during this test.

(1) Make sure the pressure vessel is complete with no components or panels missing.
(2) Make sure the static ports are visually clear of any obstruction.
(3) Connect external power (refer to 24-40).
(4) Remove the upper engine cowling (refer to Chapter 71-10).
(5) Connect a calibrated pressure gauge (0-10 psi) to the bulkhead fitting (Figure 21-30.11).
(6) Connect a pressurization air source to the aircraft via the P3 air line, prior to the solenoid shutoff valve (Figure 21-30.11).

Note: It is recommended to configure the test setup in such a way that the pressure gauge can be viewed from the same location the pressure source is controlled.

(7) Pull the SPS COMP 1A, SPS COMP 1B, SPS COMP 2A, SPS COMP 2B, GEAR CONTROL, IGNITER, L PITOT HEAT, L PITOT HT CTRL, L STALL HEAT, R STALL HEAT, R PITOT HEAT, R PITOT HT CTRL and PUSHER circuit breakers.
(8) Make sure the PRESS CTRL 1, PRESS CTRL 2, DOOR SEAL, and MASS FLOW circuit breakers are in.
(9) Set the BATT 1 and BATT 2 switches to ON.
(10) Set the landing field elevation to -1000 ft.
(11) Set the left and right landing gear weight-on-wheels switches to the in-the-air mode.

(12) Maintain this configuration for at least 2 minutes, or until the outflow valves are closed.

(13) Remove power from the solenoid in the controller by pulling the PRESS CTRL 1 circuit breaker.

(14) Press the PRESS AIR Switch, switch shall illuminate “PRESS AIR ON”.

(15) Press the HI PRESS AIR Switch, switch shall illuminate “HI PRESS AIR ON”.

(16) Press the DOOR SEAL Switch, switch shall illuminate “DOOR SEAL ON”.

(17) Close and lock the cabin door.

(18) Install the door safety strap/net.

(19) Begin pressurizing the cabin.

(20) Verify on the calibrated pressure gauge that a cabin pressure of 6.6 ± .1 psi is reached.

(21) Adjust inflow rate as required to stabilize at 6.6 ± .1 psi.

(22) Allow the pressure to stabilize for 5 minutes.

(23) Identify and repair any leaks.

Note: Minor leakage through the control cable seals, aircraft drains, and around the cabin door is normal.

(24) Cease pressurization of the cabin. Allow the cabin pressure to return to zero via the calibrated leak points in the aircraft structure.

(25) Once cabin pressure reads zero, remove the safety strap/net, unlock and open the door.

(26) Set the left and right landing gear weight-on-wheels switches to the on-the-ground mode.

(27) Reset the PRESS CTRL 1, SPS COMP 1A, SPS COMP 1B, SPS COMP 2A, SPS COMP 2B, GEAR CONTROL, IGNITER, L PITOT HEAT, L PITOT HT CTRL, L STALL HEAT, R STALL HEAT, R PITOT HEAT, R PITOT HT CTRL and PUSHER circuit breakers.

(28) Set the BATT 1 and BATT 2 switches to OFF.

(29) Disconnect external power (refer to 24-40).

(30) Disconnect the pressurization air source from the aircraft and reconnect the bleed air line.

(31) Perform a leak check of the bleed air line.

(32) Install the upper engine cowling (refer to Chapter 71-10).

Figure 21-30.11: Pressurization Connections

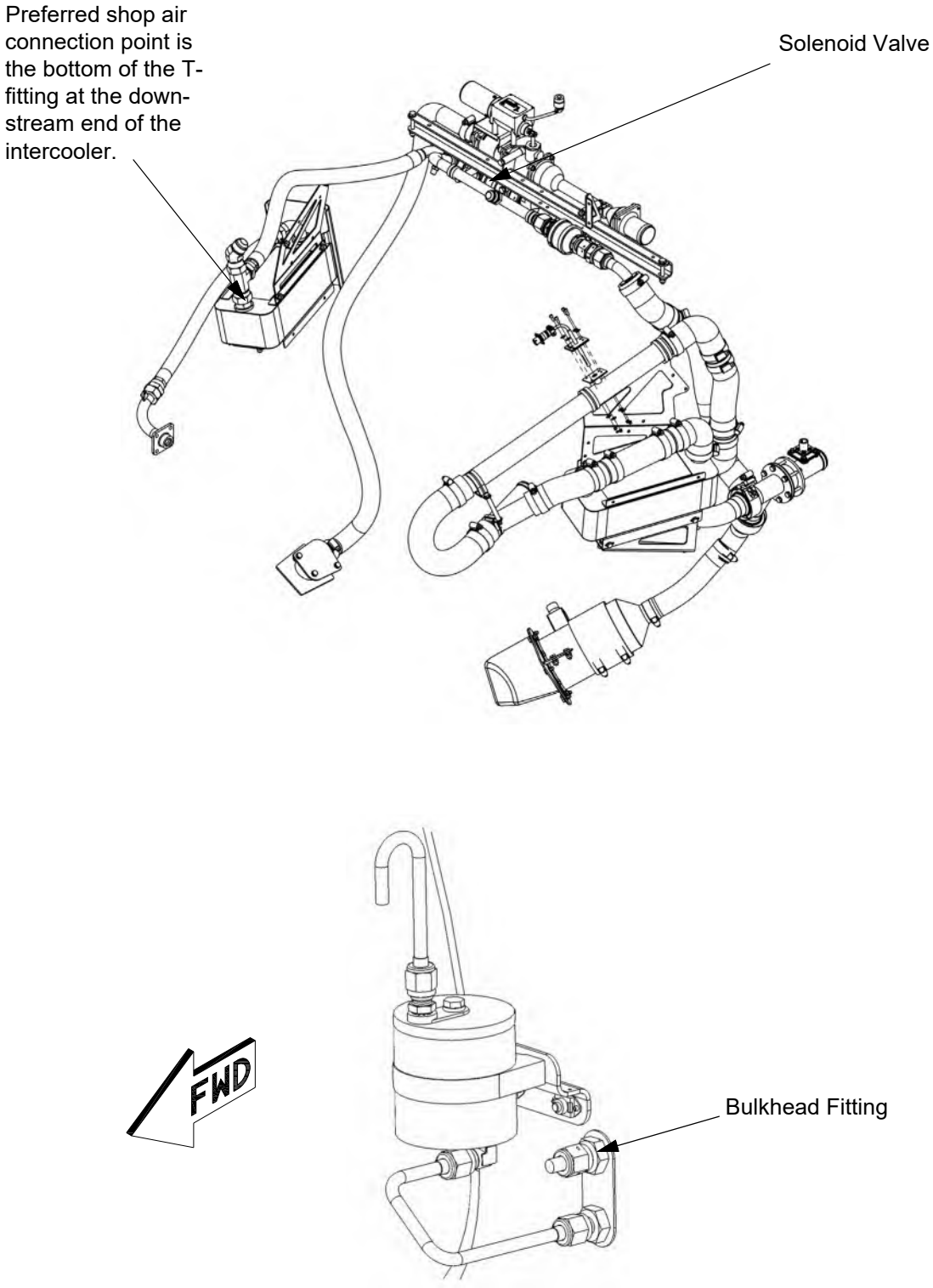

O. ECS System Functional Check

(1) To test the Bleed Air Solenoid Shut-off Valve, Mass Flow Control Valve, Mass Flow Controller, Mass Flow Sensor, or Mass Flow Sensor Controller, do the steps that follow:

(a) This check is performed with the engine running (refer to Chapter 71-10 or the latest revision of the AFM).

(b) Make sure the PRESS CTRL 1, PRESS CTRL 2, and MASS FLOW circuit breakers are IN.

(c) Make sure the SPS COMP 1A, SPS COMP 1B, SPS COMP 2A, SPS COMP 2B, GEAR CONTROL, IGNITER, L PITOT HEAT, L PITOT HT CTRL, L STALL HEAT, R STALL HEAT, R PITOT HEAT, R PITOT HT CTRL and PUSHER circuit breakers are OUT.

(d) Make sure the left and right WOW switch pin plungers are in the extended position.

(e) Verify the PRESS AIR OFF CAS message appears.

(f) Press the PRESS AIR switch. The switch shall illuminate “PRESS AIR ON”.

(g) Verify airflow through the heat/pressurization air ducts in the floor.

(h) Set the left and right WOW switch pin plungers to the retracted position.

(i) Verify increased airflow through the heat/pressurization air ducts in the floor.

(j) Press the HIGH PRESS AIR switch. The switch shall illuminate “HIGH PRESS AIR ON”.

(k) Verify increased airflow through the heat/pressurization air ducts in the floor.

(l) Set the left and right WOW switch pin plungers to the extended position.

(m) Verify decreased airflow through the heat/pressurization air ducts in the floor.

(n) Press the PRESS AIR switch. Make sure “PRESS AIR ON” is not illuminated.

(o) Verify the PRESS AIR OFF CAS message appears and there is no airflow through the heat/pressurization air ducts in the floor.

(p) Set the SPS COMP 1A, SPS COMP 1B, SPS COMP 2A, SPS COMP 2B, GEAR CONTROL, IGNITER, L PITOT HEAT, L PITOT HT CTRL, L STALL HEAT, R STALL HEAT, R PITOT HEAT, R PITOT HT CTRL and PUSHER circuit breakers to IN.

(2) To test the Temperature Control Valve, Cabin Temperature Controller, or Duct Temperature Sensor, do the steps that follow:

Note: This check is performed without the engine running and is to verify automatic and manual input control of the Temperature Control Valve.

(a) Set the BATT 1 and BATT 2 switches to ON.

(b) Ensure the CABIN TEMP circuit breakers is IN.

(c) Remove the upper engine cowling (refer to Chapter 71-10).

(d) Remove the manifold arm and Marmon clamp to access the duct temperature sensor (Figure 21-3.3).

(e) Set the cabin temperature adjustment knob to the manual hot position (full clockwise, in the detent).

(f) Use a heat gun to force hot air across the duct temperature sensor.

Note: The firewall check valve will need to be held open to allow hot air to move across the duct temperature sensor.

(g) Listen or feel for the temperature control valve to actuate.

Figure 21-30.12: Duct Temperature Sensor

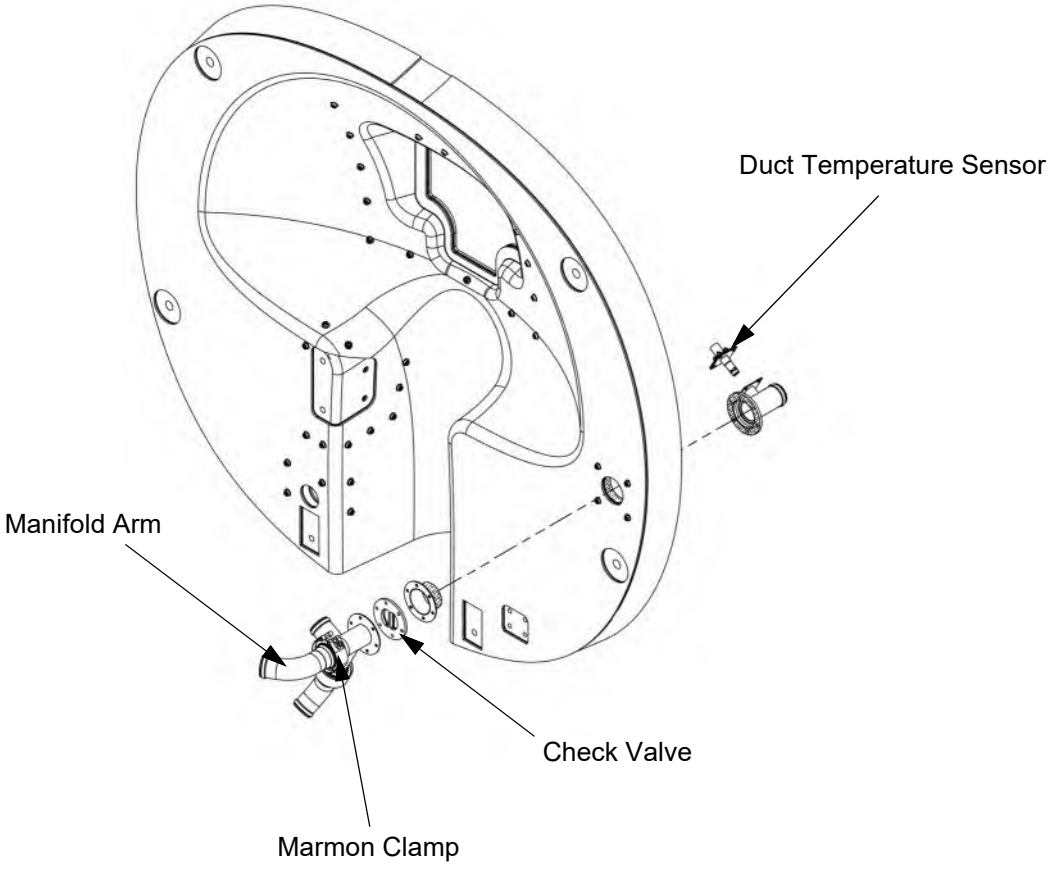

P. Troubleshooting

(1) Troubleshoot the pressurization system in accordance with Sections 5 and 6 of the latest revision of the Operation and Description Manual, Kollsman Autoschedule Pressurization System (KAPS II), document number S2119.

Note: The switch (toggle switch) to activate the auto-exercise signal to the pressurization controller is behind the aft pressure bulkhead finish panel. It is mounted on a bracket underneath the window dimmer module shown in the figure below.

Figure 21-30.13: Pressurization Test Switch Location

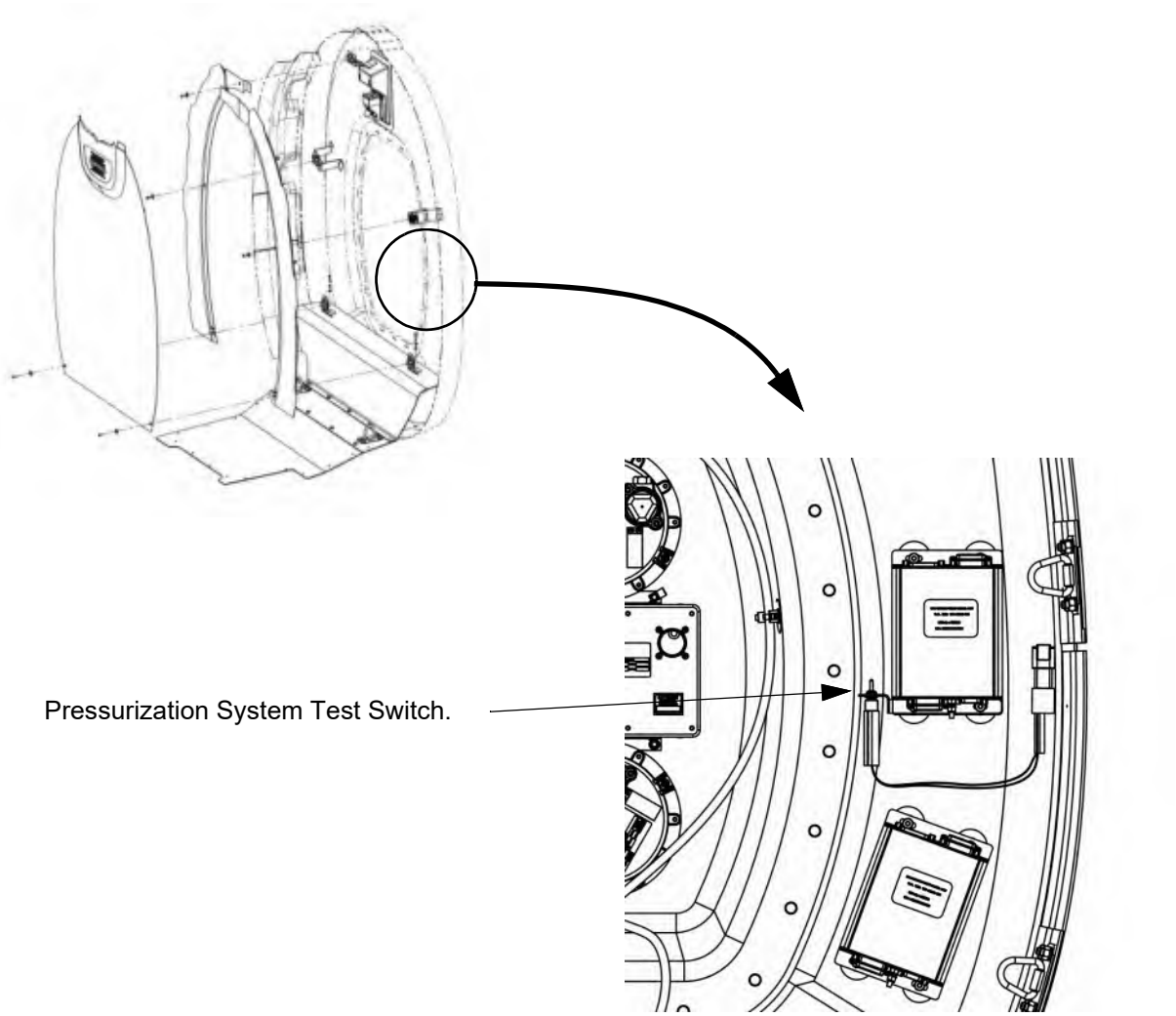

This Page Intentionally Left Blank

COOLING

1. Description

Cool air supplied by the environmental control system is generated using a compressor mounted aft of the pressure bulkhead and evaporators underneath the aft passenger seats. The recirculation blowers supply airflow to the overhead ducts with individual seat outlets.

Note: For all component maintenance, servicing, and repair refer to the latest revision of Enviro Systems, Inc., Air Management System, System Description and Operation Manual with Illustrated Parts List for the E1000, document # 21-00-45.

2. Maintenance Practices

A. Compressor Condenser Module

(1) Removal

(a) De-service the system in accordance with the latest revision of Enviro Systems, Inc., Air Management System, System Description and Operation Manual with Illustrated Parts List for the E1000, document # 21-00-45.

(b) Pull the AIR COND CTRL circuit breaker.

(c) Verify the BATT 1 and BATT 2 switches are set to OFF.

(d) Disconnect external electrical power from the airplane (refer to Chapter 24-40).

(e) Remove the pressure bulkhead access panel (refer to Chapter 21-30).

(f) Pull the compressor module circuit breaker.

(g) Disconnect the electrical harness.

(h) Disconnect the four hoses from the fittings installed on the compressor module.

(i) Cap or plug the hoses to keep contamination out of the system.

(j) Remove the four bolts and washers attaching the compressor module to the air inlet shelf.

(k) Carefully separate the high temperature RTV seal between the compressor and the enclosure opening.

(l) Remove the compressor module from the airplane.

(m) Remove the hose attachment fittings from the compressor module.

(2) Installation

(a) Install the hose attachment fittings onto the compressor module.

(b) Install the compressor module onto the air inlet shelf using four bolts and washers.

(c) Seal the gap between the compressor and the enclosure opening using high temperature RTV.

(d) Connect the hoses to the compressor module.

(e) Connect the electrical harness.

(f) Connect a ground power unit to the airplane (refer to Chapter 24-40).

(g) Reset the AIR COND CTRL circuit breaker.

(h) Service and test the system in accordance with the latest revision of Enviro Systems, Inc., Air Management System, System Description and Operation Manual with Illustrated Parts List for the E1000, document # 21-00-45.

(i) Disconnect the ground power unit from the airplane (refer to Chapter 24-40).

(j) Install the pressure bulkhead access panel (refer to Chapter 21-30).

(3) Inspection

(a) Inspect the compressor condenser module as required by Section 7 of the latest revision of the Enviro Systems, Inc., Air Management System, System Description and Operation Manual with Illustrated Parts List for the E1000, document # 21-00-45.)

B. Evaporator Module(s)

(1) Removal

(a) De-service the system in accordance with the latest revision of Enviro Systems, Inc., Air Management System, System Description and Operation Manual with Illustrated Parts List for the E1000, document # 21-00-45.

(b) Pull the AIR COND CTRL circuit breaker.

(c) Verify the BATT 1 and BATT 2 switches are set to OFF.

(d) Disconnect external electrical power from the airplane (refer to Chapter 24-40).

(e) Remove the aft passenger seats (refer to Chapter 25-20.

(f) Remove the aft passenger seat rails (refer to Chapter 53-40).

(g) Remove the pressure bulkhead access panel (refer to Chapter 21-30).

(h) Pull the evaporator module circuit breaker(s).

(i) Remove the carpet and floor panels attached to the top of the evaporator enclosure (refer to Chapter 25-20).

(j) Remove the rear seat support flange(s) under the floor panels as necessary.

(k) Disconnect the electrical harness. Disconnect the two hoses from the fittings installed on the evaporator module(s).

(l) Cap or plug the hoses to keep contamination out of the system.

(m) Disconnect the SCAT tubing from the evaporator outlet(s).

(n) Disconnect the condensate drain tube(s).

(o) Remove the bolts, washers, and nuts attaching the evaporator module(s) to the evaporator enclosure.

(p) Remove the evaporator module(s) from the airplane.

(q) Remove the hose attachment fittings from the evaporator module(s).

(2) Installation

(a) Install the hose attachment fittings to the evaporator module(s).

(b) Attach the evaporator module(s) to the evaporator enclosure using bolts, washers, and nuts.

(c) Attach the SCAT tubing to the evaporator outlet(s).

(d) Connect the two hoses to the fittings on the evaporator module(s).

(e) Connect the condensate drain tube(s).

(f) Connect the electrical harness.

(g) Connect a ground power unit to the airplane (refer to Chapter 24-40).

(h) Reset the AIR COND CTRL circuit breaker.

(i) Service and test the system in accordance with the latest revision of Enviro Systems, Inc., Air Management System, System Description and Operation Manual with Illustrated Parts List for the E1000, document # 21-00-45.

(j) Disconnect the ground power unit from the airplane.

(k) Install the pressure bulkhead access panel (refer to Chapter 21-30).

(l) Install the rear seat support flanges underneath the floor panels.

(m) Install the floor panels and carpet (refer to Chapter 25-20).

(n) Install the seat rails (refer to Chapter 53-40).

(o) Install the aft passenger seats (refer to Chapter 25-20).

(3) Inspection

(a) Inspect the evaporator modules as required by Section 7 of the latest revision of the Enviro Systems, Inc., Air Management System, System Description and Operation Manual with Illustrated Parts List for the E1000, document # 21-00-45.)

Figure 21-50.1: Cool Air System (Sheet 1 of 5)

LEGEND

1. Compressor Module
2. Evaporator Module
3. Tee Fitting
4. Reducer Fitting
5. Coupling Fitting
6. Elbow Bulkhead Fitting
7. Fitting Nut
8. Elbow Fitting
9. Hose
10. SCAT Tube
11. Clamp
12. Bolt
13. Washer
14. Nut
15. Bracket

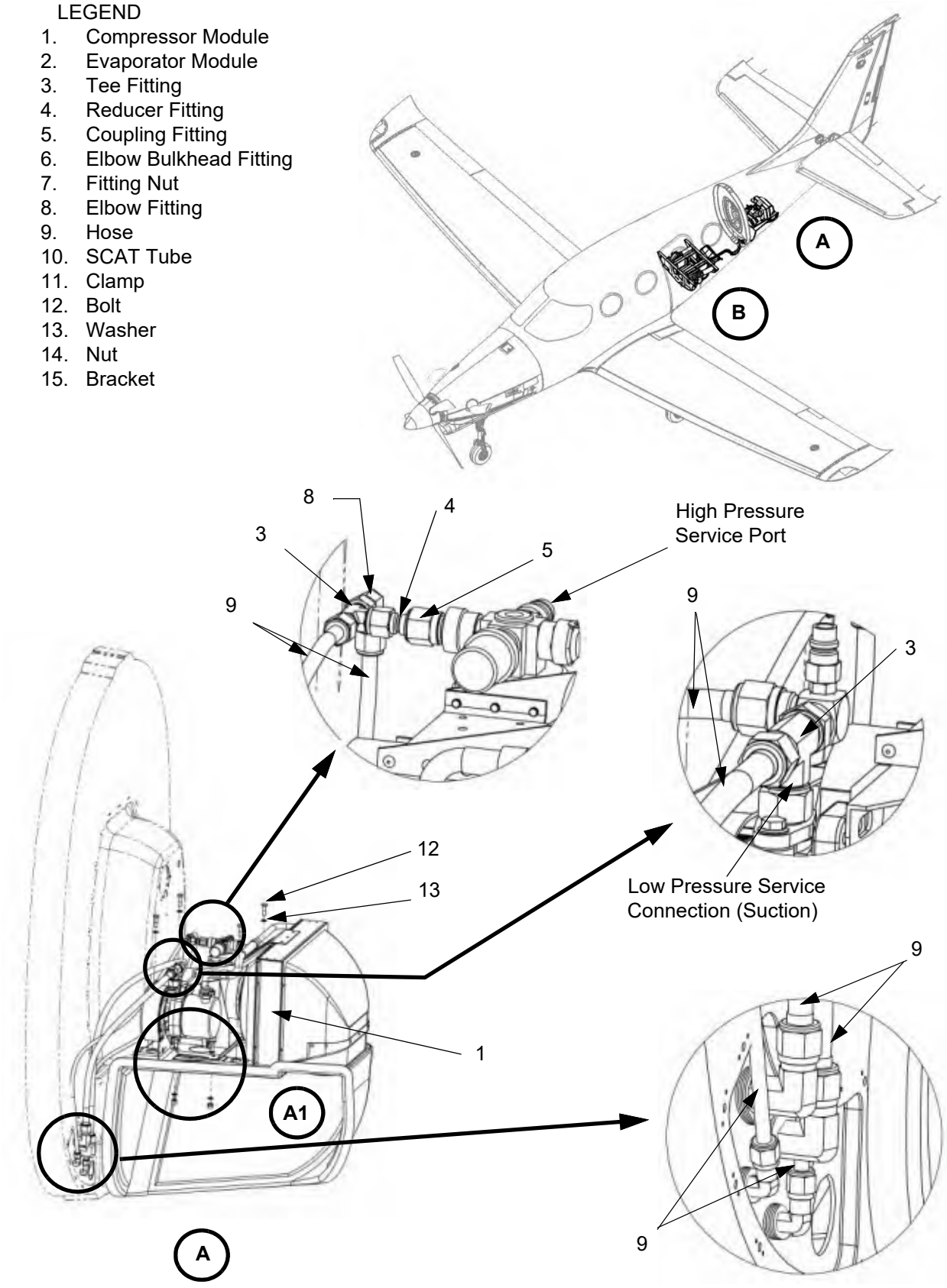

Figure 21-50.1: Cool Air System (Sheet 2 of 5)

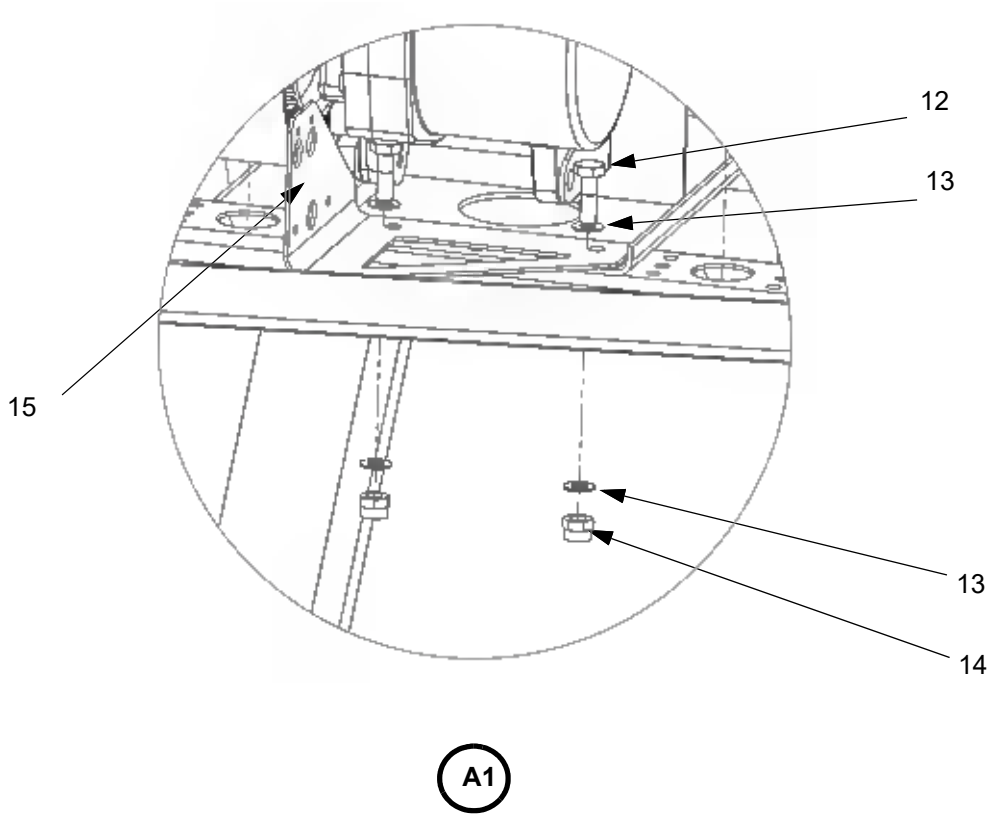

LEGEND

1. Compressor Module
2. Evaporator Module
3. Tee Fitting
4. Reducer Fitting
5. Coupling Fitting
6. Elbow Bulkhead Fitting
7. Fitting Nut
8. Elbow Fitting
9. Hose
10. SCAT Tube
11. Clamp
12. Bolt
13. Washer
14. Locknut
15. Bracket

Figure 21-50.1: Cool Air System (Sheet 3 of 5)

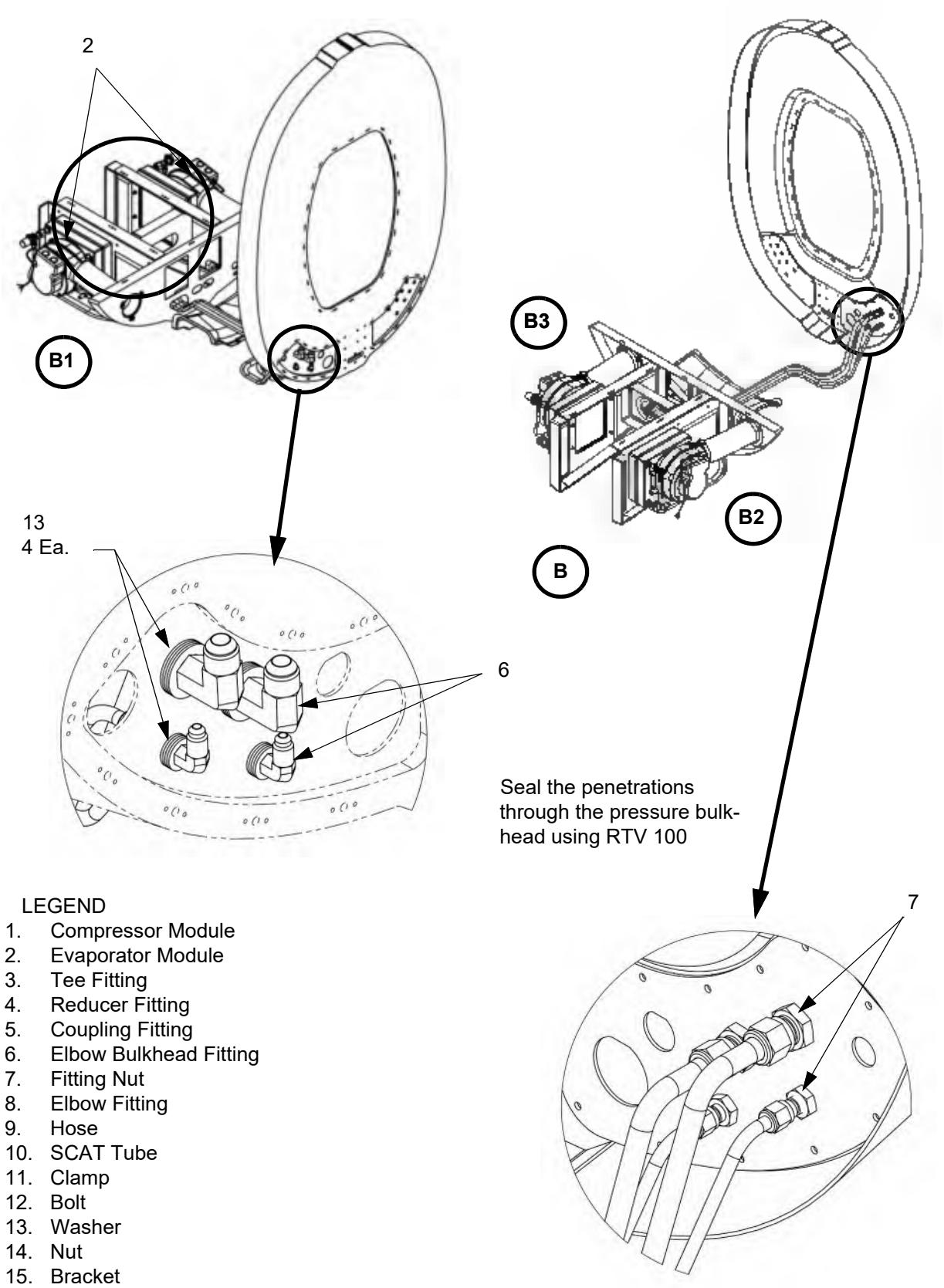

LEGEND

1. Compressor Module
2. Evaporator Module
3. Tee Fitting
4. Reducer Fitting
5. Coupling Fitting
6. Elbow Bulkhead Fitting
7. Fitting Nut
8. Elbow Fitting
9. Hose
10. SCAT Tube
11. Clamp
12. Bolt
13. Washer
14. Nut
15. Bracket

Figure 21-50.1: Cool Air System (Sheet 4 of 5)

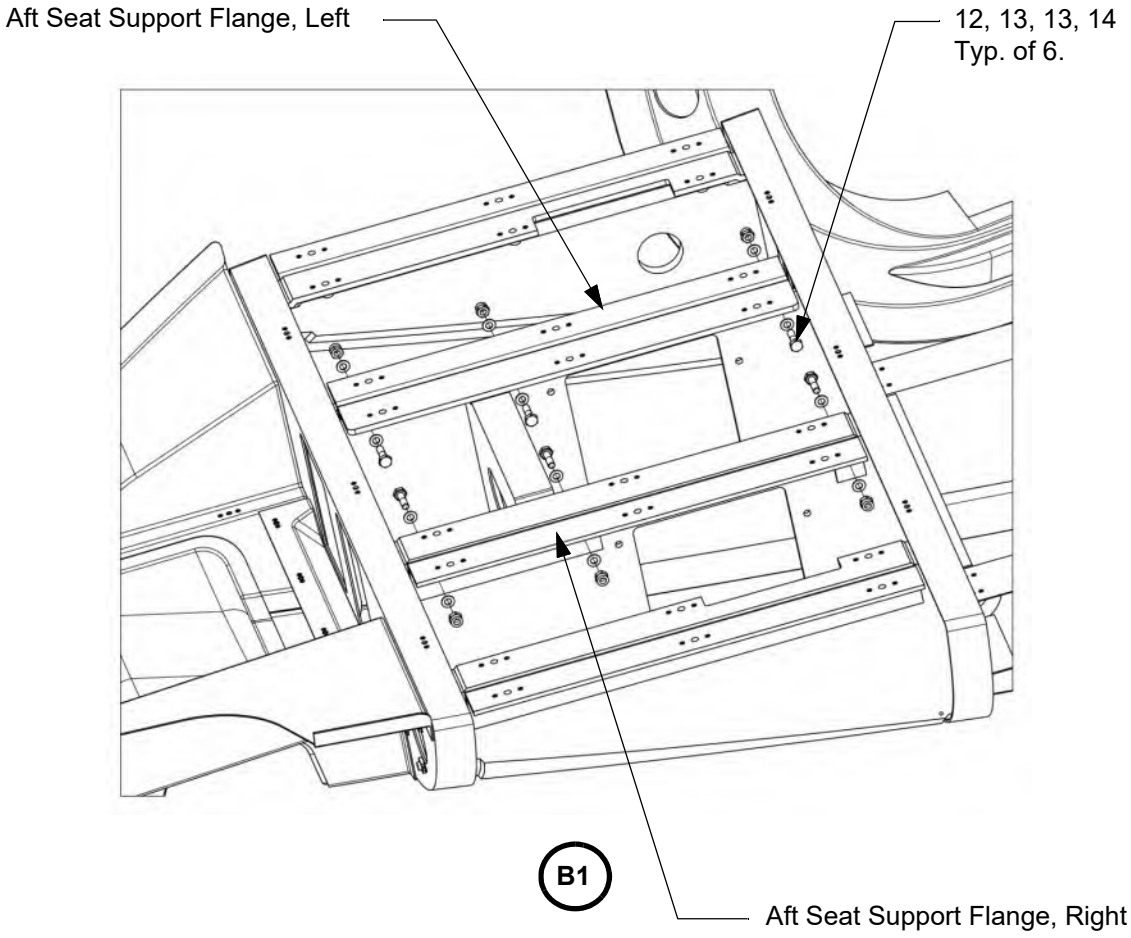

LEGEND

1. Compressor Module
2. Evaporator Module
3. Tee Fitting
4. Reducer Fitting
5. Coupling Fitting
6. Elbow Bulkhead Fitting
7. Fitting Nut
8. Elbow Fitting
9. Hose
10. SCAT Tube
11. Clamp
12. Bolt
13. Washer
14. Nut
15. Bracket

Figure 21-50.1: Cool Air System (Sheet 5 of 5)

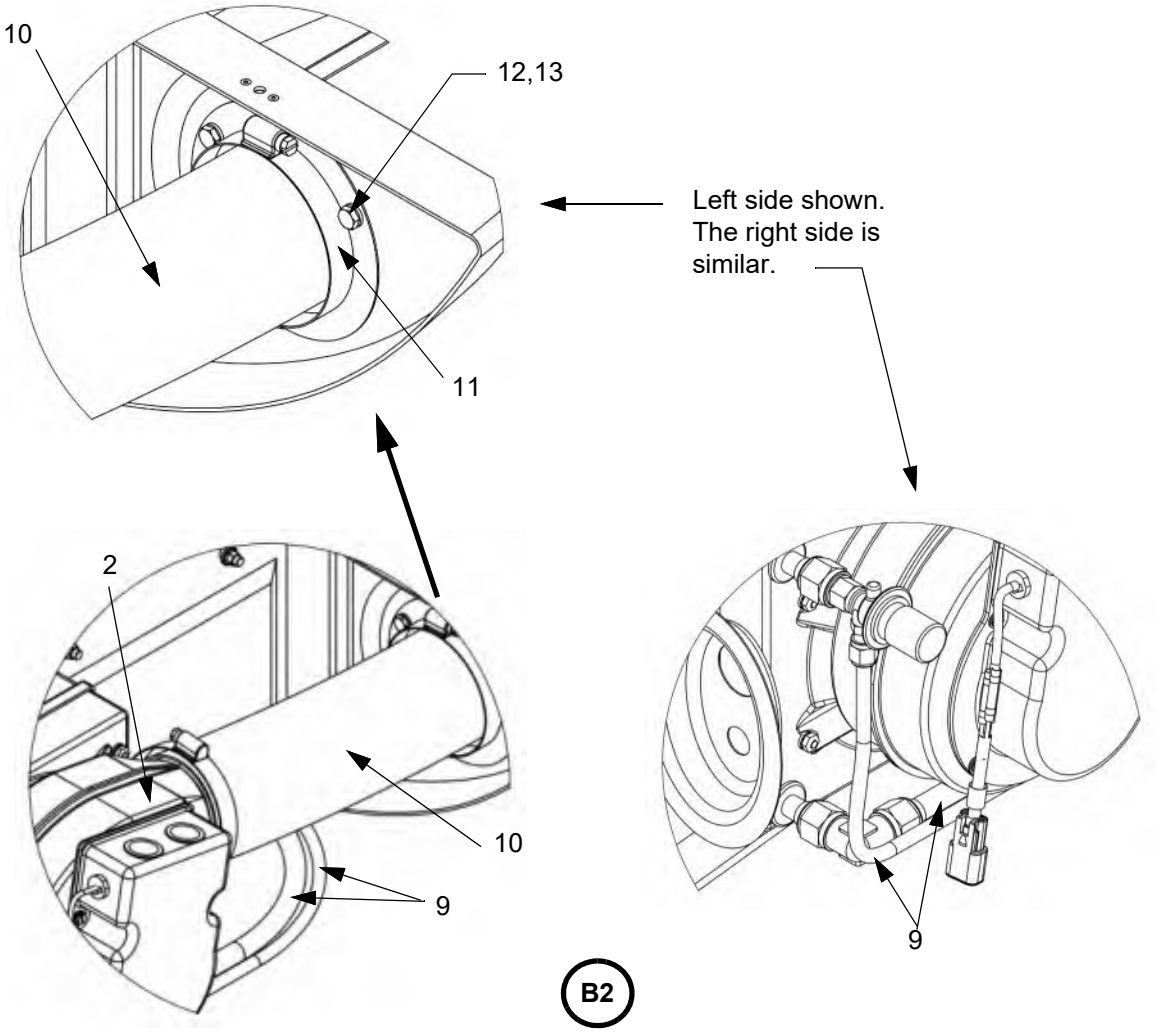

LEGEND

1. Compressor Module
2. Evaporator Module
3. Tee Fitting
4. Reducer Fitting
5. Coupling Fitting
6. Elbow Bulkhead Fitting
7. Fitting Nut
8. Elbow Fitting
9. Hose
10. SCAT Tube
11. Clamp
12. Bolt
13. Washer
14. Nut
15. Bracket

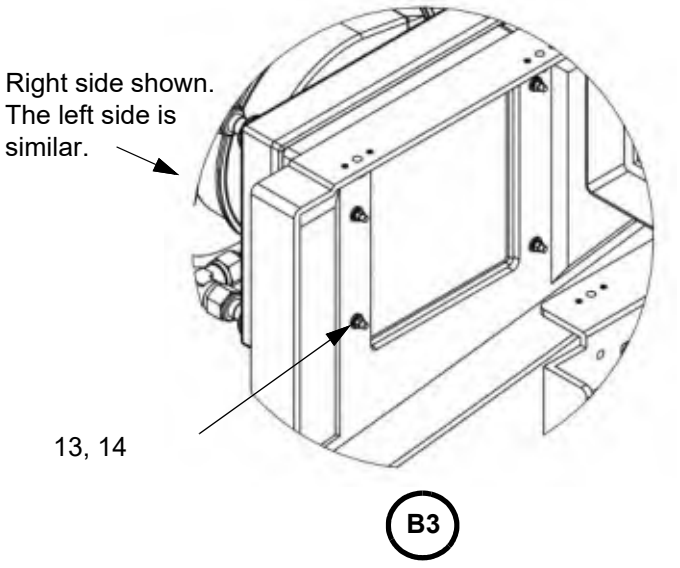

C. Air Conditioning System Test

The air conditioning system uses R-134a refrigerant and RL-100H refrigerant oil. The refrigerant charge weight for the system is 1.36 ± 0.25 lb. The compressor-condenser module is charged with 4.0 ounces of RL-100H refrigerant oil.

(1) Make sure the BATT 1, and BATT 2 switches are OFF.
(2) Remove the pressure bulkhead access panel (refer to Chapter 21-30).
(3) Set the two EVAPORATOR MODULE and the AC COMPRESSOR MODULE circuit breakers to OUT.
(4) Connect an SAE J2788 compliant air conditioning recover, recycle and recharge machine (A/C machine) to the airplane compressor-condenser module.
(5) Using the A/C machine, charge the air conditioning system with R-134a as required to provide quantity of refrigerant listed above.
(6) Set the two EVAPORATOR MODULE and the AC COMPRESSOR MODULE circuit breakers to IN.
(7) Connect a ground power unit to the airplane (refer to Chapter 24-40).
(8) Set the BATT 1, and BATT 2 switches to ON.
(9) Make sure the AIR COND CTRL circuit breaker is set.
(10) Rotate the fan control knob on the climate panel from the “OFF” position to the “LOW” position.
(11) Push the AIR COND switch. The switch should light “AIR COND ON”.
(12) Make sure there is airflow from the compressor exhaust port on the empennage.
(13) Verify flow of cold air from the cabin air conditioning vents.
(14) Rotate the fan control knob on the climate panel from the “LOW” position to the “HIGH” position.
(15) Verify increased flow of cold air from the cabin air conditioning vents.
(16) Push the AIR COND switch. Make sure the switch is not lighted.
(17) Disconnect the A/C machine.
(18) Disconnect external electrical power from the airplane (refer to Chapter 24-40).
(19) Install the pressure bulkhead access panel (refer to Chapter 21-30).

TEMPERATURE CONTROL

1. Description

Cabin Temperature is adjusted using a control panel with an air conditioner fan control knob, a hot air control knob, a ground fresh air switch, an air conditioning compressor switch, and a defrost switch. The air conditioner fan control has off, low, and high fan speed settings. The hot air control gives cold, warm, or hot air. The GROUND FRESH AIR switch opens or closes a valve letting fresh outside air into the cabin when the airplane is on the ground. The AIR COND switch activates or deactivates the air conditioning compressor. The DEFROST switch gives heated air to the windshield.

2. Maintenance Practices

A. Air Conditioning Control Panel

(1) Removal

(a) Verify the BATT 1 and BATT 2 switches are set to OFF.

(b) Disconnect external electrical power from the airplane (refer to Chapter 24-40).

(c) Remove the screws securing the control panel to the instrument panel then carefully pull the panel outwards.

(d) Disconnect the control panel wiring harness from the airplane electrical harness.

(e) Remove the control panel from the airplane.

(f) To remove the switches refer to Chapter 24-60.

(2) Installation

(a) To install a switch refer to Chapter 24-60.

(b) To install the control panel.

(i) Hold the control panel near its seat in the instrument panel.

(ii) Connect the control panel wiring harness to the airplane electrical harness.

(iii) Slide the control panel into position then attach it to the instrument panel using screws.

(iv) Do an operational test of the control panel.

(3) Operational Test

(a) Operate the engine in ground idle

(b) Ensure the CABIN TEMP circuit breaker is IN.

(c) Without rotating into the “MANUAL MODE”, adjust the temperature control knob from hot to cool. Verify a decrease in temperature of the air from the floor vents.

(d) Rotate the temperature control knob clockwise as far as it will go then ensure it is in the “MANUAL MODE” position. Verify a decrease in temperature of the air from the floor vents.

Figure 21-60.1: Air Conditioning Control Panel

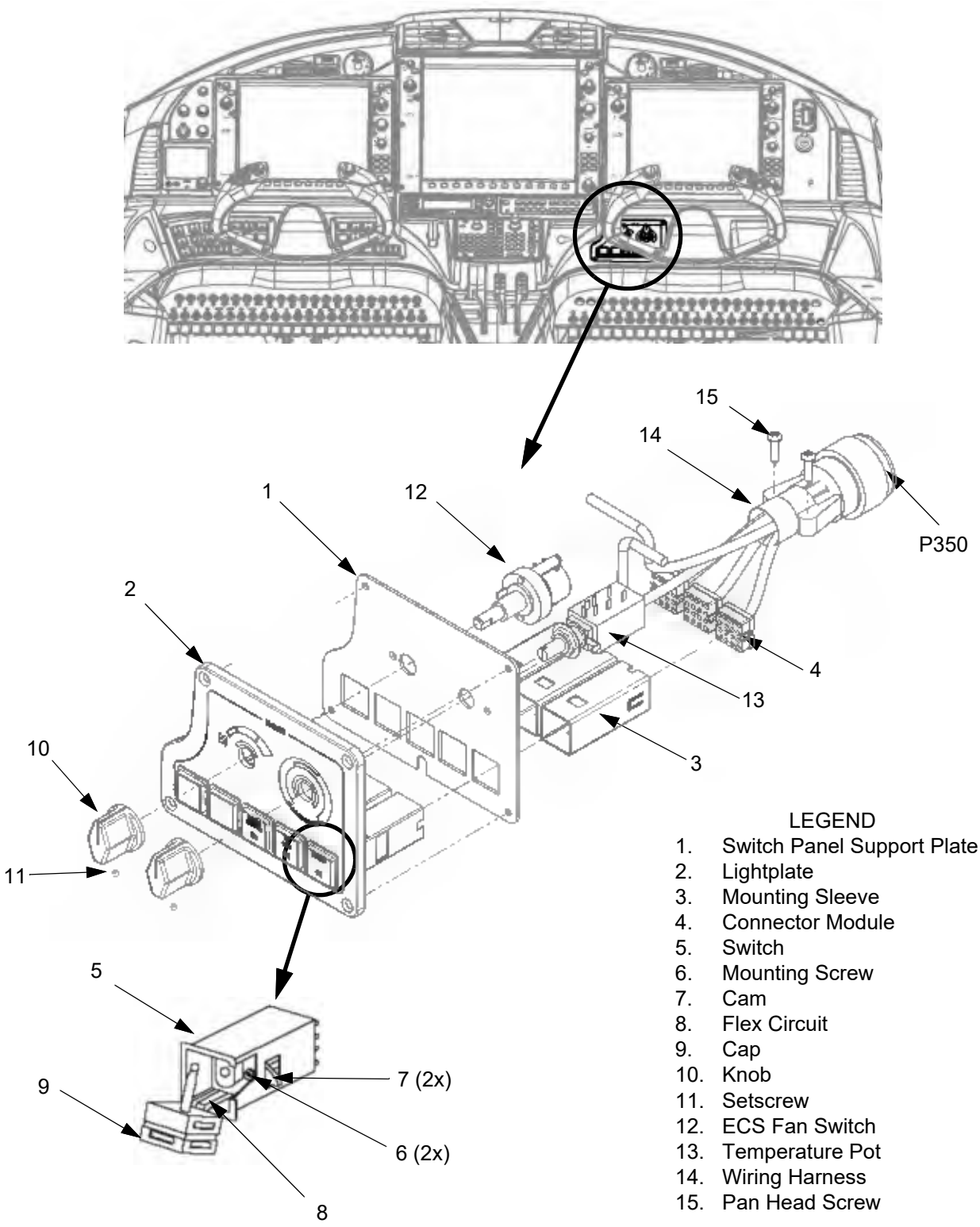

CHAPTER 22

Auto Flight

This Page Intentionally Left Blank

List of Effective Pages

Chapter/Section	Page Number	Effective Date
22-Title	Page 1	02 Jan 2020
22-Title	Page 2	02 Jan 2020
22-LOEP	Page 1	08 Sep 2026
22-LOEP	Page 2	08 Sep 2026
22-TOC	Page 1	08 Sep 2026
22-TOC	Page 2	10 Jul 2025
22-00	Page 1	14 Jul 2021
22-00	Page 2	14 Jul 2021
22-00	Page 3	02 Jan 2020
22-00	Page 4	14 Jul 2021
22-00	Page 5	14 Jul 2021
22-00	Page 6	14 Jul 2021
22-00	Page 7	14 Jul 2021
22-00	Page 8	14 Jul 2021
22-00	Page 9	08 Sep 2026
22-00	Page 10	08 Sep 2026
22-00	Page 11	08 Sep 2026
22-00	Page 12	08 Sep 2026
22-10	Page 1	02 Jan 2020
22-10	Page 2	02 Jan 2020
22-10	Page 3	02 Jan 2020
22-10	Page 4	02 Jan 2020
22-10	Page 5	02 Jan 2020
22-10	Page 6	08 Sep 2026
22-10	Page 7	10 Jul 2025
22-10	Page 8	08 Sep 2026
22-10	Page 9	08 Sep 2026
22-10	Page 10	08 Sep 2026
22-10	Page 11	02 Jan 2020
22-10	Page 12	02 Jan 2020
22-10	Page 13	02 Jan 2020
22-10	Page 14	02 Jan 2020
22-10	Page 15	14 Jul 2021
22-10	Page 16	14 Jul 2021
22-10	Page 17	02 Jan 2020
22-10	Page 18	16 May 2022
22-10	Page 19	16 May 2022
22-10	Page 20	16 May 2022
22-10	Page 21	08 Sep 2026
22-10	Page 22	08 Sep 2026

22-10 ..... Page 23 ..... 08 Sep 2026
22-10 ..... Page 24 ..... 08 Sep 2026
22-10 ..... Page 25 ..... 08 Sep 2026
22-10 ..... Page 26 ..... 08 Sep 2026

22-11 ..... Page 1 ..... 14 Jul 2021
22-11 ..... Page 2 ..... 14 Jul 2021
22-11 ..... Page 3 ..... 10 Jul 2025
22-11 ..... Page 4 ..... 14 Jul 2021
22-11 ..... Page 5 ..... 14 Jul 2021
22-11 ..... Page 6 ..... 14 Jul 2021
22-11 ..... Page 7 ..... 14 Jul 2021
22-11 ..... Page 8 ..... 08 Sep 2026
22-11 ..... Page 9 ..... 08 Sep 2026
22-11 ..... Page 10 ..... 08 Sep 2026
22-11 ..... Page 11 ..... 08 Sep 2026
22-11 ..... Page 12 ..... 08 Sep 2026
22-11 ..... Page 13 ..... 08 Sep 2026
22-11 ..... Page 14 ..... 08 Sep 2026
22-11 ..... Page 15 ..... 08 Sep 2026
22-11 ..... Page 16 ..... 08 Sep 2026
22-11 ..... Page 17 ..... 08 Sep 2026
22-11 ..... Page 18 ..... 08 Sep 2026
22-11 ..... Page 19 ..... 08 Sep 2026
22-11 ..... Page 20 ..... 08 Sep 2026
22-11 ..... Page 21 ..... 08 Sep 2026
22-11 ..... Page 22 ..... 08 Sep 2026
22-11 ..... Page 23 ..... 08 Sep 2026
22-11 ..... Page 24 ..... 08 Sep 2026
22-11 ..... Page 25 ..... 08 Sep 2026
22-11 ..... Page 26 ..... 08 Sep 2026
22-11 ..... Page 27 ..... 08 Sep 2026
22-11 ..... Page 28 ..... 08 Sep 2026

22-30 ..... Page 1 ..... 10 Jul 2025
22-30 ..... Page 2 ..... 10 Jul 2025
22-30 ..... Page 3 ..... 10 Jul 2025
22-30 ..... Page 4 ..... 10 Jul 2025
22-30 ..... Page 5 ..... 10 Jul 2025
22-30 ..... Page 6 ..... 10 Jul 2025
22-30 ..... Page 7 ..... 10 Jul 2025
22-30 ..... Page 8 ..... 10 Jul 2025

Table of Contents

List of Effective Pages ..... 22-LOEP / Page 1
Table of Contents ..... 22-TOC / Page1

Paragraph **Page Number**

Auto Flight

1. S-TEC MAGIC® 2100 DFCS ..... 22-00 / Page 1
2. Garmin GFC 700 AFCS ..... 22-00 / Page 5
3. Garmin Emergency Autoland (EAL) ..... 22-00 / Page 9

E1000 S-Tec Autopilot *(SN: K003 - K010)*

1. Description ..... 22-10 / Page 1
2. Maintenance Practices ..... 22-10 / Page 1
   - A. Programmer/Computer ..... 22-10 / Page 1
   - B. Auto Rudder Trim Computer ..... 22-10 / Page 2
   - C. Yaw Damper Amplifier ..... 22-10 / Page 3
   - D. Roll Servo ..... 22-10 / Page 5
   - E. Pitch Servo ..... 22-10 / Page 7
   - F. Yaw Servo ..... 22-10 / Page 8
   - G. Pusher Servo ..... 22-10 / Page 9
   - H. Bridle Cables ..... 22-10 / Page 15
   - I. Autopilot Operational Checkout ..... 22-10 / Page 16
   - J. Pusher Servo Clutch Override Check ..... 22-10 / Page 18
   - K. Servo Clutch Adjustment ..... 22-10 / Page 19
   - L. Servo Bridle Cable Tension Check ..... 22-10 / Page 21
   - M. S-TEC Autopilot Functional Check ..... 22-10 / Page 21

E1000 GX Garmin Autopilot *(SN: K011-K085, or K003 - K010 with SB-0017)*

1. Description ..... 22-11 / Page 1
2. Maintenance Practices ..... 22-11 / Page 4
   - A. Mode Controller ..... 22-11 / Page 4
   - B. Trim Signal Adapter ..... 22-11 / Page 6
   - C. Roll Servo ..... 22-11 / Page 8
   - D. Pitch Servo ..... 22-11 / Page 10
   - E. Yaw Servo ..... 22-11 / Page 11
   - F. Pusher Servo ..... 22-11 / Page 12
   - G. Bridle Cables ..... 22-11 / Page 19
   - H. Autopilot Operational Checkout ..... 22-11 / Page 21
   - I. Pusher Servo Clutch Override Check ..... 22-11 / Page 22
   - J. Pusher Servo Clutch Adjustment ..... 22-11 / Page 22
   - K. Pusher Servo Bridle Cable Tension Check ..... 22-11 / Page 24
   - L. Garmin GFC 700 Autopilot Functional Check ..... 22-11 / Page 25

E1000 AX Garmin AutoThrottle *(SN: K014, K086 and On)*

1. Description ..... 22-30 / Page 1
2. Troubleshooting ..... 22-30 / Page 1
3. Maintenance Practices ..... 22-30 / Page 2
   A. AutoThrottle Servo ..... 22-30 / Page 2
   B. Throttle Lever Angle (TLA) Sensor ..... 22-30 / Page 3
   C. AutoThrottle Operational Check ..... 22-30 / Page 4
   D. Bridle Cable ..... 22-30 / Page 8

AUTO FLIGHT

1. S-TEC MAGIC® 2100 DFCS

A. General

(SN: K003 - K010) The E1000 has the S-TEC MAGIC® 2100 Digital Flight Control System (DFCS). This system is a three-Axis attitude based autopilot that lets the pilot manually or automatically control the roll, pitch, and yaw of the airplane through selected modes of operation. Refer to Figure 22-00.1.

Refer to the latest revision of the S-TEC MAGIC® 2100 Pilot's Operating Handbook, P/N 87201, for additional information.

Figure 22-0.1: S-TEC MAGIC® 2100 DFCS

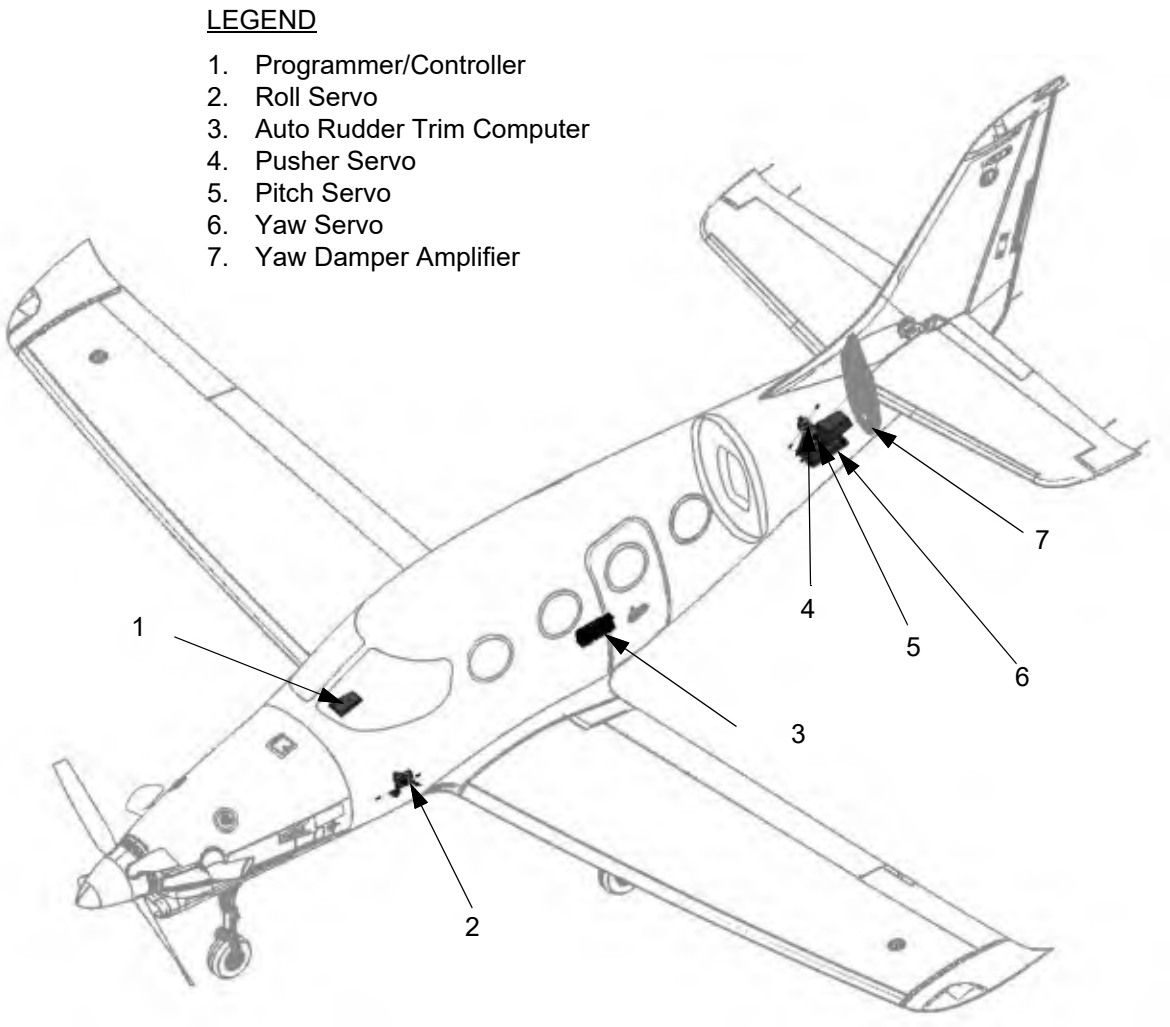

B. Troubleshooting

The S-TEC Digital Flight Control System has failure annunciation to identify the system and/or sub-system that has failed.

(1) Primary System Failure
If a primary system fails, the system will disconnect and annunciate all failures and disallow all modes.

(2) Sub-System Failure
The system will annunciate a failed input.

(3) Attitude Reference Failure
If, during the normal operation of the autopilot, the ADAHRS reverts to initialization mode, the system will disconnect all modes and annunciate the disconnect then annunciate "ADAHRS INITIALIZING" as well. If the ADAHRS fails, the system will annunciate "ATT FAIL" and will not let any mode of the autopilot function.

Problem	Probable Cause	Solution
Autopilot clutches cannot be overpowered.	Servo clutch torque settings are incorrect.	Check the servo clutch torque settings.
Persistent Attitude Fail Message	Autopilot did not pass the ADAHRS alignment during the start up test.	Check the connection between the Autopilot head unit and the GIA (Arinc 429).
		Check the connections between the ADAHRS and the GIA's.
	Faulty ADAHRS,	Replace ADAHRS (refer to Chapter 34-20.2.D.).
	Faulty GIA	Replace GIA (refer to Chapter 34-50.2.A.).
	Faulty Autopilot Programmer/Computer	Replace Autopilot Programmer/Computer (refer to Chapter 22-10.2.A).
		Contact S-TEC.

Problem	Probable Cause	Solution
Autopilot Fail	Autopilot did not pass the start up test.	Check the connection between the Autopilot Programmer/Computer and the Pitch, Roll and Yaw Servos.
	Faulty Autopilot Programmer/Computer	Replace Autopilot Programmer/Computer (refer to Chapter 22-10.2.A).
		Contact S-TEC.
No Aural Alert is heard after successful pre-flight test	Audio operation fault has occurred	Repeat the Autopilot engagement, followed by disengagement to confirm audio operation fault.
		Check the connection between the Autopilot Programmer/Computer and the GMA.

Figure 22-0.2: S-TEC MAGIC® 2100 DFCS

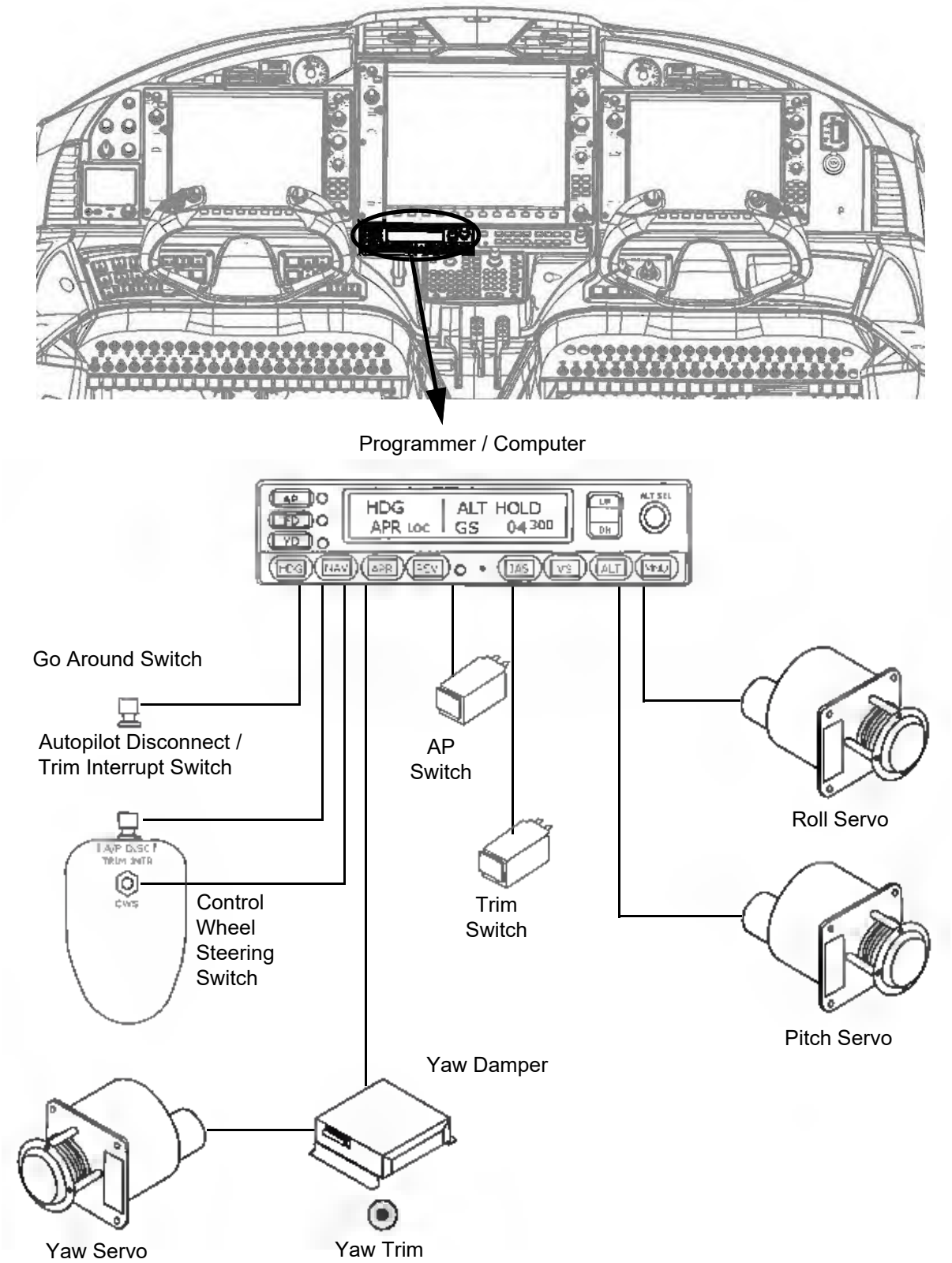

2. Garmin GFC 700 AFCS

A. General

(SN: K011 and On, or K003 - K010 with SB-0017) The E1000 GX has the Garmin GFC 700 AHRS-based automatic flight control system (AFCS). This system is a three-Axis autopilot that lets the pilot manually or automatically control the roll, pitch, and yaw of the airplane through selected modes of operation. The GFC 700 includes advanced autopilot modes of operation, including envelope protection, Auto-Level Mode, and Emergency Descent. Refer to Figure 22-00.3.

Refer to the latest revision of the Garmin GFC 700 Pilot's Operating handbook for additional information.

Figure 22-0.3: Garmin GFC 700 AFCS

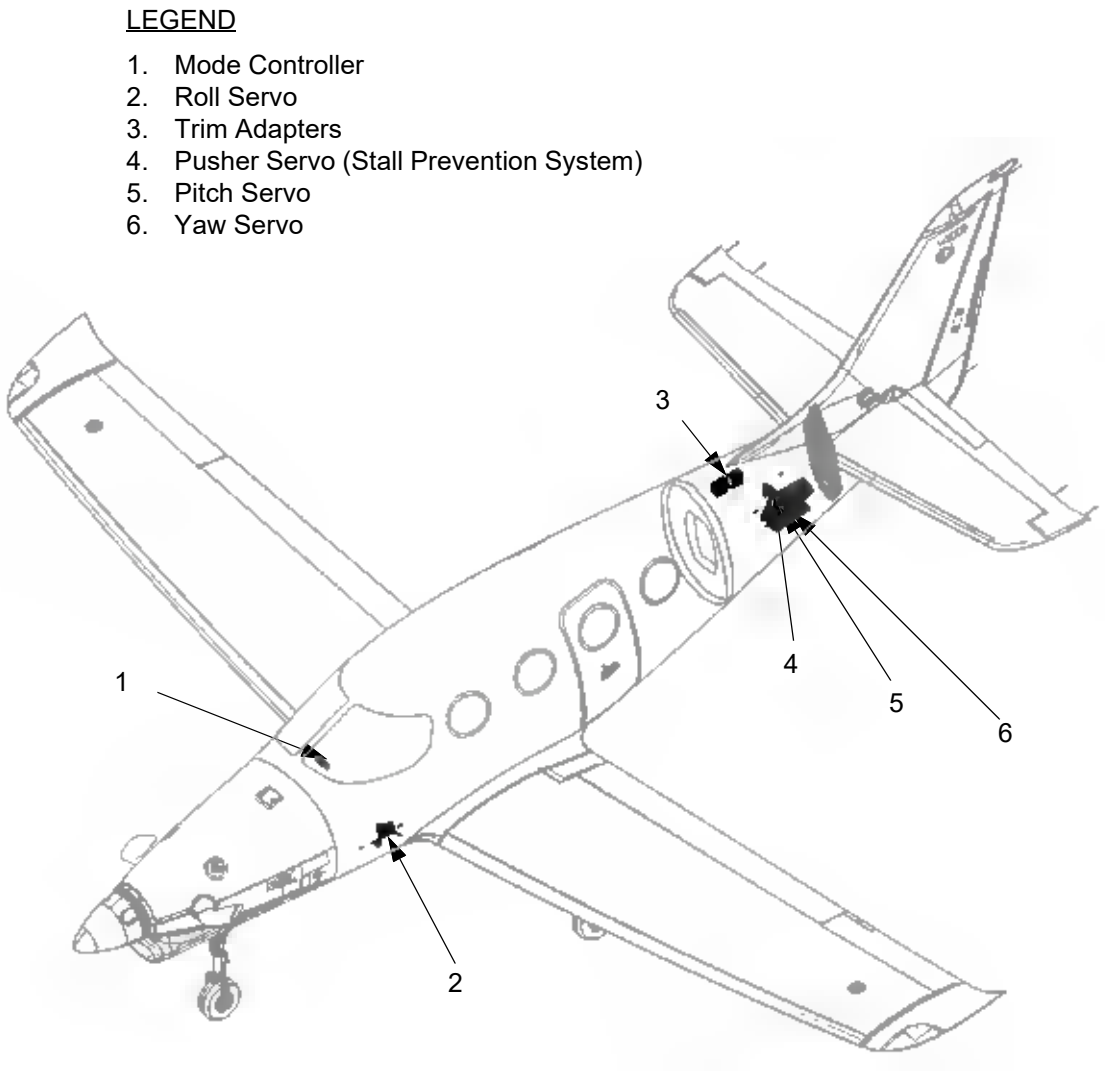

B. Troubleshooting

The Garmin GFC 700 has failure annunciation to identify the system and/or sub-system that has failed.

Problem	Probable Cause	Solution
"AFCS" (white text on red background) annunciation is displayed on PFD.	AFCS System Failure.	• Ensure that the system is in proper working order. Check specifically for proper operation of the GIA 64 Integrated Avionics Unit, GSU 75 ADAHRS, and all GSA 80/81 Servos and GTA82 Pitch Trim Adapters • Check that no red X's are present on the MFD and PFDs. • Check that there are no Alert messages present in the PFD Alert window. Correct any software or configuration errors noted. • Go to the AUX SYSTEM STATUS page on the MFD and verify that all LRUs have a 'green' check.
"PFT" (black text on white background) annunciation is displayed on PFD.	Pre-Flight Test is in progress.	• Allow system to complete pre-flight tests. The preflight test should finish in approximately 2 minutes. If it does not pass, red 'PFT' annunciation is displayed on PFD.

Problem	Probable Cause	Solution
"PFT" (white text on red background) annunciation is displayed on PFD.	Pre-Flight Test has failed.	• Ensure that the system is in proper working order. Check specifically for proper operation of the GIA 64 Integrated Avionics Unit, GSU 75 ADAHRS, and all GSA 80/81 Servos and GTA82 Pitch Trim Adapters • Check that no red X's are present on the MFD and PFDs. • Check that there are no Alert messages present in the PFD Alert window. Correct any software or configuration errors noted. • Go to the AUX SYSTEM STATUS page on the MFD and verify that all LRUs have a 'green' check.
"PTCH" (white text on red background) annunciation is displayed on PFD.	Pitch Axis Failure	• Check the AUX – SYSTEM STATUS page to see if the servo is online (green check). • Check that the affected servo is receiving power. • Check the servo wiring and connector.
"YAW" (white text on red background) annunciation is displayed on PFD.	Yaw Axis Failure	
"ROLL" (white text on red background) annunciation is displayed on PFD.	Roll Axis Failure	
"PTRM" (white text on red background) annunciation is displayed on PFD.	Indicates Pitch Trim Failure	

Figure 22-0.4: Garmin GFC 700 AFCS

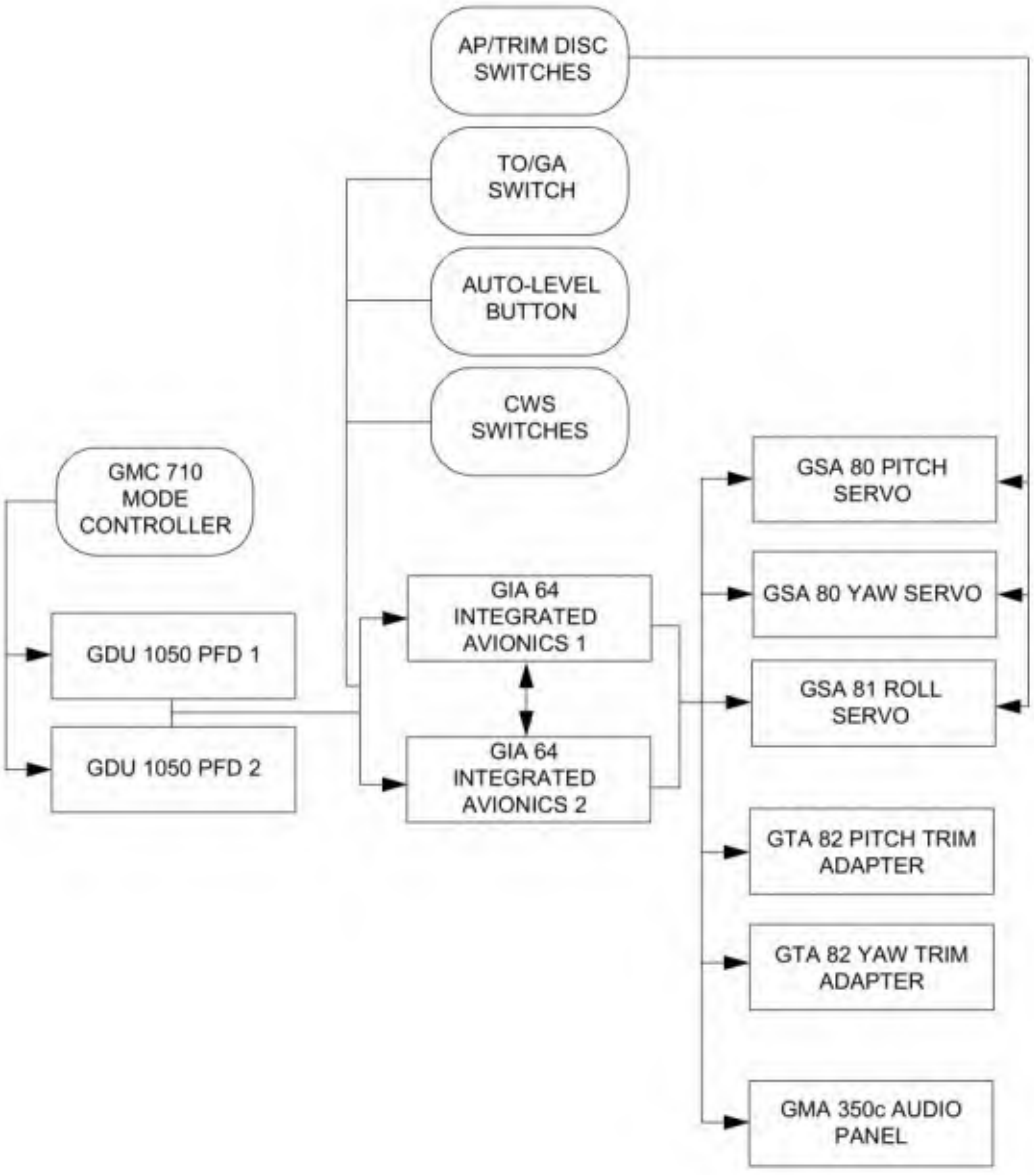

3. Garmin Emergency Autoland (EAL)

Garmin's Emergency Autoland (EAL) system is an integrated, autonomous flight safety feature designed to assume control of the aircraft in the event of pilot incapacitation and safely land it without human input.

Passengers can request EAL through one of three AUTO-LAND switches in the airplane. One is on the right side of the instrument panel above the flap switch, and two are located above the mid and aft row passenger seats in the cabin overhead. If the autopilot is not engaged when a passenger requests EAL, the AFCS will automatically enter Level Mode.

Refer to the latest revision of the Pilot's Operating Handbook and FAA Approved AFM for E1000 for additional information.

EAL can be activated by the following methods:

- Manually pressing one of three AUTO-LAND switches.
- Automatically after pilot inactivity has been detected.
- Automatically after Emergency Descent Mode has been triggered and pilot inactivity is subsequently detected.
- Automatically after ESP automatically engages Level Mode.

EAL can be deactivated by:

- Pressing and releasing the AP/TRIM DISC button.
- Disabling the EAL system on the MFD AUX page.
- Turning the BATT switches OFF (on-ground only).

The EAL system adds the following equipment:

- AUTOLAND 5A Circuit Breaker, RH Circuit Breaker Panel, ACC 1 Bus.
- Cockpit AUTO-LAND activation switch, located on the flap control panel.
- (2) Cabin AUTO-LAND activation switches, located in the cabin overhead.
- EAL Activation relay, located on the cockpit relay panel.
- EAL Flaps 1, EAL Flaps 2, EAL IPS, EAL Gear, EAL Lights, EAL FCO 1, and EAL FCO 2 relays located in the cabin relay box.

Figure 22-0.5: AUTO-LAND Switches

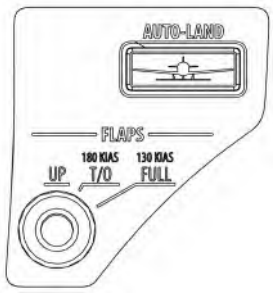

Cockpit AUTO-LAND Switch

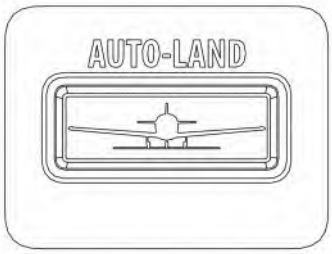

Cabin AUTO-LAND Switch (Typical)

A. Maintenance Practices

Note: The cockpit switch is installed in the flap switch light plate and can not be replaced separately from the light plate. Refer to Chapter 27-50 for light plate replacement procedures.

Note: The removal and installation procedures for the cabin switches is typical for both switches.

(1) EAL Cabin Switch Removal

(a) Set the BATT 1 and BATT 2 switches to off.

(b) Disconnect external electrical power from the airplane (refer to Chapter 24-40).

(c) Remove the cabin overhead finish panel (refer to Chapter 25-20).

(d) Remove the 4 screws and washers that attach the EAL Switch to the panel and remove the switch.

(2) EAL Cabin Switch Installation

(a) Put the EAL switch in position and install the 4 screws and washer that attach it to the panel.

(b) Install the cabin overhead finish panel (refer to Chapter 25-20).

(c) Do the EAL Operational Check, refer to step (3).

(3) EAL Operational Check

(a) Connect external electrical power to the airplane (refer to Chapter 24-40).

(b) Put the aircraft in Configuration mode:

(i) Pull the PFD 1, PFD 2 and MFD circuit breakers.

(ii) Set the BATT 1 and BATT 2 switches to ON.

(iii) Press ENTER on the pilot's PFD while resetting the PFD 1 circuit breaker.

(iv) Press ENTER on the co-pilot's PFD while resetting the PFD 2 circuit breaker.

(v) Press ENTER on the MFD while resetting the MFD circuit breaker.
(vi) *INITIALIZING SYSTEM* message should be displayed on all three displays.

(c) Using the FMS knob, navigate to the *GIA 64x* tab on the PFD.

(d) Scroll down and select *Discrete In Configuration.*

(e) Make sure *Select Unit* is populated with *GIA 1*.

(f) Using the FMS knob, navigate down the *Discrete Input Channel Configuration* page to channel *15A*.

(g) Press and hold the cockpit AUTO-LAND switch until the *Data* box is green.

(h) Repeat step (g) at the mid-row and aft-row cabin AUTO-LAND switches.

(i) Using the FMS Knob, navigate to the *Select Unit* dialog box and select *GIA 2*.

(j) Using the FMS Knob, navigate down the *Discrete Input Channel Configuration* page to channel *3A*.

(k) Press and hold the cockpit AUTO-LAND switch until the *Data* box is green.

(l) Repeat step (k) at the mid-row and aft-row cabin AUTO-LAND switches.

(m) Set the BATT 1 and BATT 2 switches to off.

(n) Disconnect external electrical power from the airplane (refer to Chapter 24-40).

Figure 22-0.6: AUTO-LAND Cabin Switch

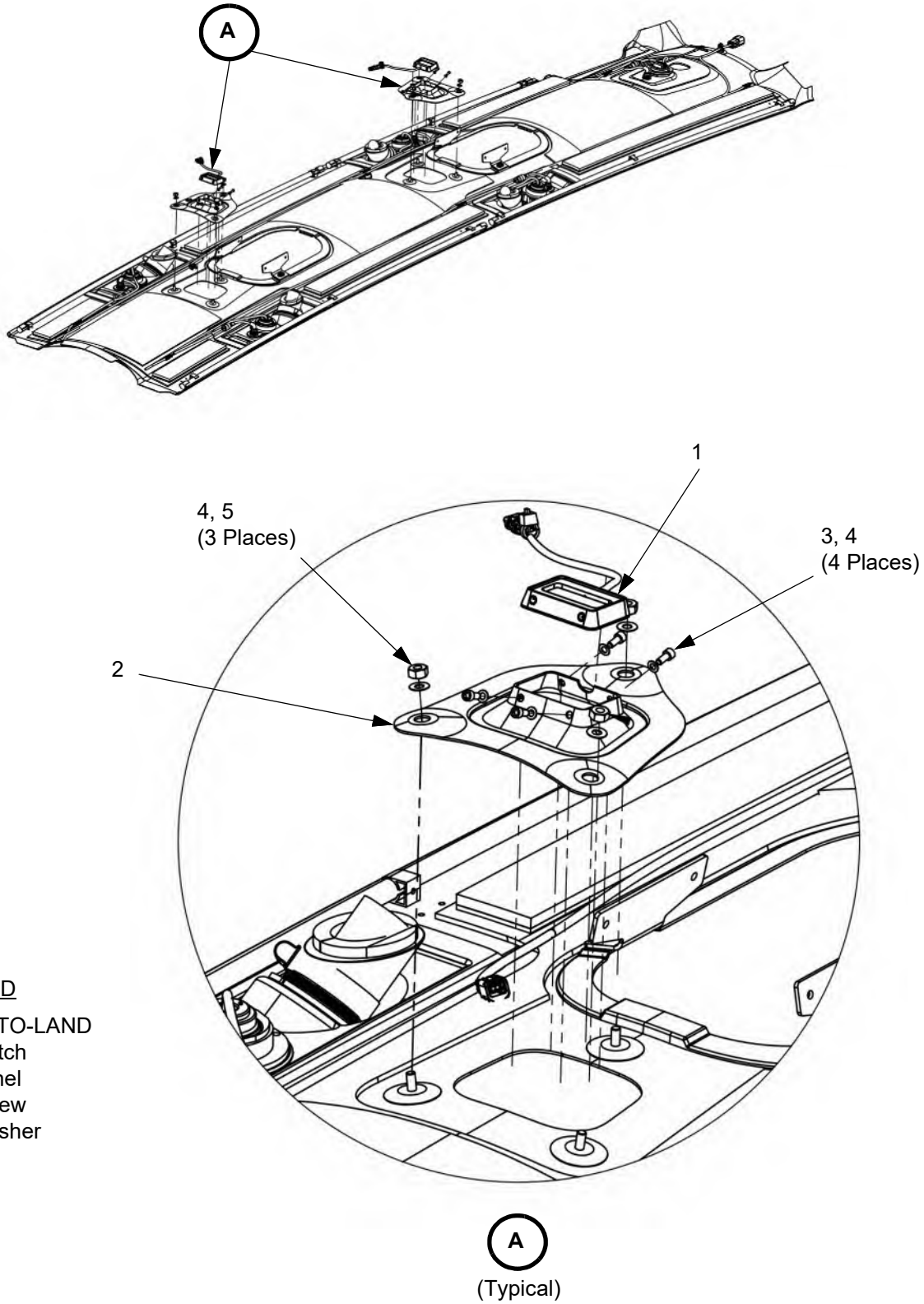

LEGEND

1. AUTO-LAND Switch
2. Panel
3. Screw
4. Washer
5. Nut

E1000 S-TEC AUTOPILOT

1. Description

(SN: K003 - K010)

The S-TEC MAGIC® 2100 Digital Flight Control System (DFCS) on this airplane is a three-axis attitude based autopilot. The system takes roll attitude, roll rate, heading error, and course error data from the air data, attitude, and heading reference system (ADAHRS) and course deviation input from the navigation receiver. Pitch attitude, pitch rate, pressure altitude, indicated airspeed, vertical speed, and vertical acceleration data is taken from the ADAHRS with glideslope deviation input from the glideslope receiver. Yaw rate data comes from the ADAHRS with lateral acceleration input from an accelerometer in the yaw damper.

The system controls the airplane direction using a roll servo connected to the ailerons, a pitch servo connected to the elevator, and a yaw servo connected to the rudder.

A sensor in the pitch servo tells the system when the airplane is out of trim about the pitch axis. The system then uses a trim servo connected to the trim tabs to move them in the direction necessary to bring the airplane into trim.

The system components are a programmer/computer, auto rudder trim computer, yaw damper amplifier, go around switch, autopilot disconnect/trim interrupt switch, control wheel steering switch, AP switch, trim switch, manual electric trim switch, roll servo, pitch servo, yaw servo, trim servo, yaw damper, and yaw trim knob.

2. Maintenance Practices

(SN: K003 - K010)

CAUTION: The autopilot system will not function correctly if one or more of the servo bridle cables is loose. Loose bridle cables can cause the system to jam. Bridle cable tension must be 15 lbs ± 3 lbs. Ensure bridle cable clamps are torqued.

A. Programmer/Computer

(1) Removal

(a) Pull the AUTOPILOT circuit breaker.

(b) Verify the BATT 1 and BATT 2 switches are set to off.

(c) Disconnect external electrical power from the airplane (refer to Chapter 24-40).

(d) Loosen the Allen screw in the bottom center of the programmer/computer faceplate.

(e) Pull the programmer/computer straight out of the mounting tray.

(2) Installation

(a) Carefully slide the programmer/computer straight in to the mounting tray.

(b) Tighten the Allen screw in the bottom center of the programmer/computer face-plate.

(c) Connect a ground power unit to the airplane (refer to Chapter 24-40).

(d) Reset the AUTOPILOT circuit breaker.

(e) Do the autopilot operational checkout. Refer to 22-10. 2. I.

B. Auto Rudder Trim Computer

(1) Removal

(a) Pull the AUTOPILOT circuit breaker.

(b) Verify the BATT 1 and BATT 2 switches are set to off.

(c) Disconnect external electrical power from the airplane (refer to Chapter 24-40).

(d) Remove the passenger cabin carpet (refer to Chapter 25-20) and right side floor (refer to Chapter 53-20).

(e) Disconnect the electrical harness.

(f) Install protective caps over the electrical connectors.

(g) Remove the two socket head screws attaching the computer to its tray.

(h) Remove the computer.

(2) Installation

(a) Slide the computer into its tray then attach it using two socket head screws.

(b) Remove the protective caps from the electrical connectors

(c) Attach the electrical harness.

(d) Connect a ground power unit to the airplane (refer to Chapter 24-40).

(e) Reset the AUTOPILOT circuit breaker.

(f) Do the autopilot system checkout procedures. Refer to 22-10.2.I.

(g) Install the floor panel (refer to Chapter 53-20) and the carpet (refer to Chapter 25-20).

Figure 22-10.1: Auto Rudder Trim Computer

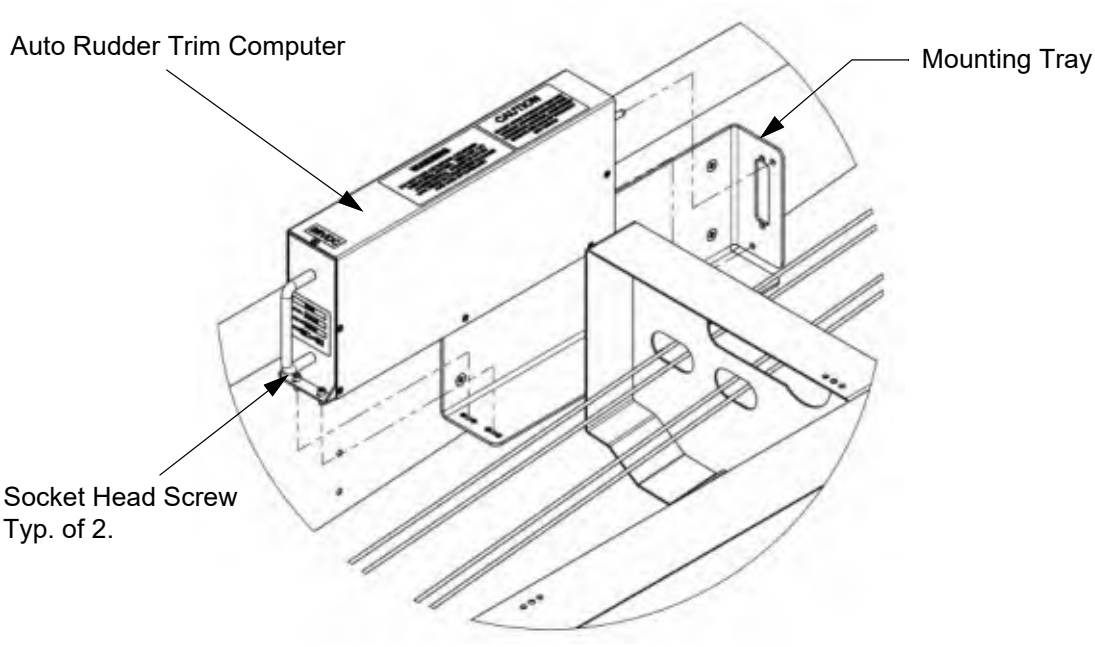

C. Yaw Damper Amplifier

(1) Removal

(a) Pull the AUTOPILOT circuit breaker.

(b) Verify the BATT 1 and BATT 2 switches are set to off.

(c) Disconnect external electrical power from the airplane (refer to Chapter 24-40).

(d) Remove the pressure bulkhead access panel (refer to Chapter 21-30).

(e) Disconnect the electrical harness.

(f) Install protective caps over the electrical connectors.

(g) Remove the socket head screws and washers attaching the amplifier to the forward vertical fin.

(h) Remove the amplifier from the airplane.

(2) Installation

(a) Correctly orient then attach the amplifier to the forward vertical fin using socket head screws and washers.

(b) Remove the protective caps from the electrical connectors.

(c) Connect the electrical harness.

(d) Connect a ground power unit to the airplane (refer to Chapter 24-40).

(e) Reset the AUTOPILOT circuit breaker.

(f) Do the autopilot operational checkout. Refer to 22-10.2.I.

(g) Install the pressure bulkhead access panel (refer to Chapter 21-30).

(3) Yaw Damper Potentiometer Tuning

This procedure is only required for installation of a new yaw damper and gives instructions for tuning the yaw damper potentiometer to ensure the yaw damper is at an accurate nominal position.

CAUTION: CAUTION: During this procedure do not connect or disconnect the yaw damper amplifier connector with power applied. Damage to the amplifier may occur.

(a) Disconnect the 25-pin connector from the Yaw Damper Amplifier.

(b) Measure 5k ohms ± 0.1k ohm across pins 7 and 8.

(c) Center the panel mounted yaw trim potentiometer to measure 2.5k ohms ± 0.1k ohm across pins 8 and 10.

(d) Ensure pin 19 is grounded.

(e) Reconnect and secure the 25-pin connector to the Yaw Damper Amplifier.

(f) Connect a ground power unit to the airplane (refer to Chapter 24-40).

(g) Turn the Autopilot Master Switch ON.

(h) Push the Yaw Damper button on the programmer and ensure the Yaw Damper Annunciation Illuminates.

(i) Check Rudder servo engagement by feel of the Rudder pedals. Pedal pressure should increase considerably with yaw servo engagement.

(j) If necessary, a centering adjustment may be made at the Yaw Damper Amplifier to null out existing servo drive. Level the airplane (refer to Chapter 8-20) before doing this.

(k) With the yaw trim potentiometer on the instrument panel centered, adjust the accelerometer potentiometer in the Yaw Damper Amplifier (located under the plug-in top of the amplifier) to eliminate any drive from the yaw servo.

Figure 22-10.2: Yaw Damper Amplifier

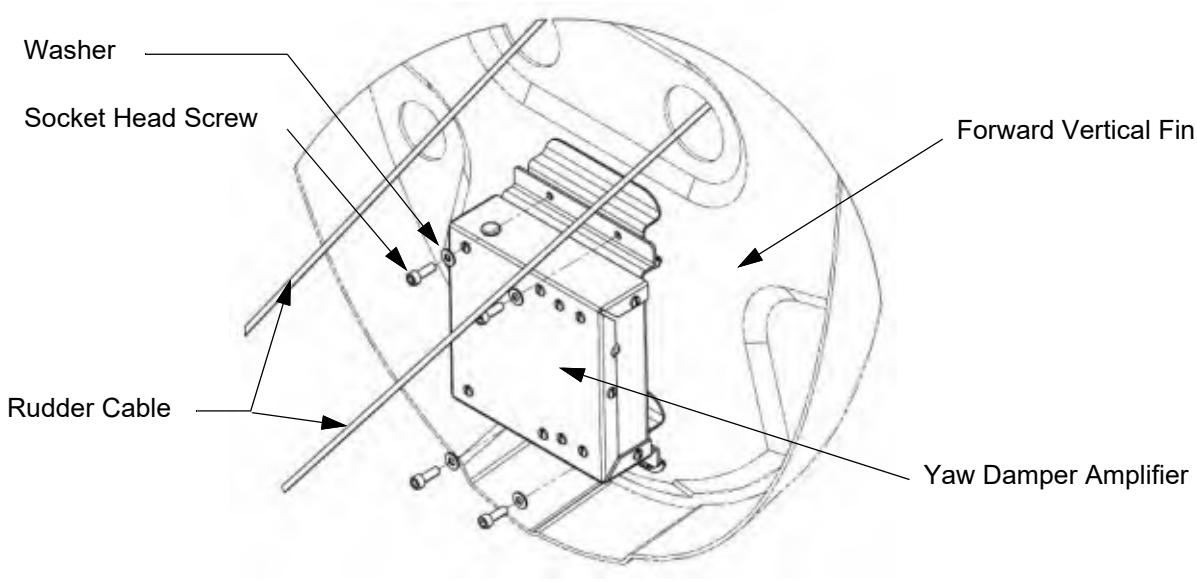

D. Roll Servo

(1) Removal

(a) Pull the AUTOPILOT circuit breaker.

(b) Verify the BATT 1 and BATT 2 switches are set to off.

(c) Disconnect external electrical power from the airplane (refer to Chapter 24-40).

(d) Remove the pilot seat (refer to Chapter 25-10).

(e) Remove the carpet from the pilot foot well (refer to Chapter 25-10).

(f) Remove access panel 3LC (refer to Chapter 6).

(g) Disconnect the electrical harness

(h) Install protective caps over the electrical connectors.

(i) Loosen then remove the cable clamp attaching the bridle cable to the aileron cable.

Note: Note the location of the cable clamp to the aileron cable for re-installation.

(j) Remove the bolts, washers, and nuts attaching the servo to the support bracket.

(k) Remove the servo from the airplane.

(2) Installation

(a) Put the airplane in a climate controlled hangar.

(b) Make the airplane level (refer to Chapter 8-20).

(c) Let the temperature of the airplane stabilize for a minimum of 3 hours before doing any inspection, rigging, or adjustments.

(d) Remove the left and right wing tips (refer to Chapter 57-30).

(e) Position the ailerons in the neutral position and Install rigging pins into the left and right aileron bellcranks.

(f) Correctly orient then attach the roll servo to the mounting bracket using bolts, washers, and nuts.

(g) Remove the protective caps from the electrical connectors.

(h) Attach the electrical harness.

(i) Clean the bridle cable, aileron cable and clamp with isopropyl alcohol.

(j) Attach the bridle cable to the aileron cable. Tension the bridle cable 15 lbs ± 3 lbs.

(k) Install the cable clamps and torque to 60 in-lbs. Check that the fastener set is fully seated and will not rotate by hand.

(l) Torque the cable clamps for a final value between 185 and 195 in-lbs, measured from the nut.

(m) Make sure the gap between the two halves of the tightened bridle cable clamp is 0.005”. Refer to Chapter 22-10.2.H.

(n) Remove the rigging pins from the left and right aileron bellcranks.

(o) Ensure there is a minimum of 0.25” between the bridle cable clamps and adjacent structures through the systems entire range of motion.

(p) Install the left and right wing tips (refer to Chapter 57-30).

(q) Connect a ground power unit to the airplane (refer to Chapter 24-40).

(r) Reset the AUTOPILOT circuit breaker.

(s) Do the autopilot operational checkout. Refer to 22-10. 2. I.

(t) Install the access panel (refer to Chapter 6) and the carpet (refer to Chapter 25-10).

(u) Install the pilot seat (refer to Chapter 25-10).

Figure 22-10.3: Roll Servo

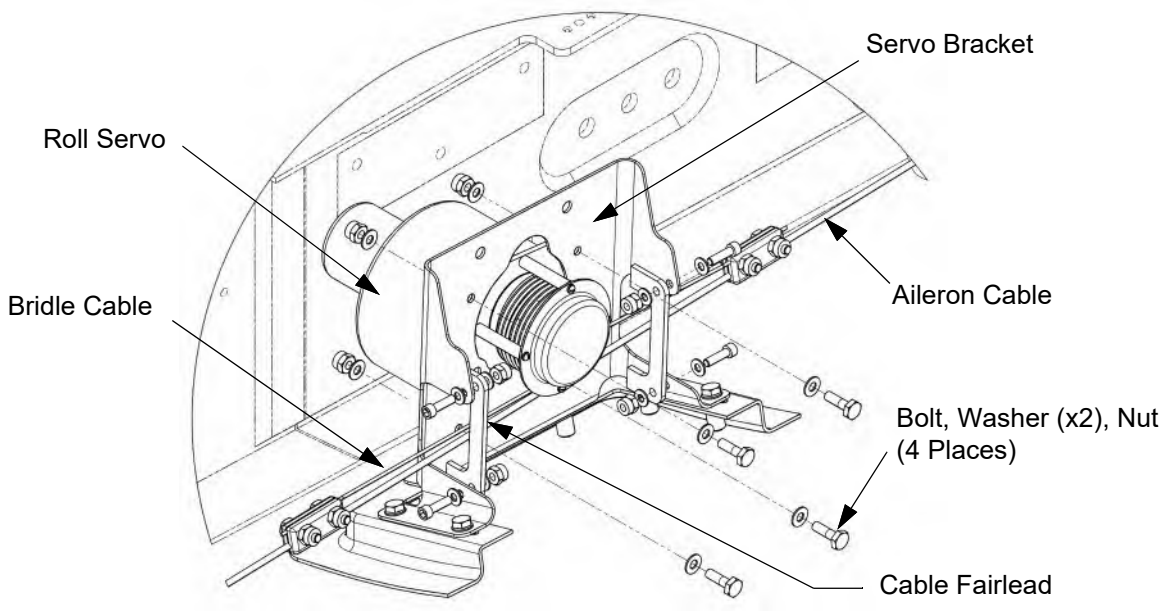

E. Pitch Servo

(1) Removal

(a) Pull the AUTOPILOT circuit breaker.

(b) Verify the BATT 1 and BATT 2 switches are set to off.

(c) Disconnect external electrical power from the airplane (refer to Chapter 24-40).

(d) Remove the pressure bulkhead access panel (refer to Chapter 21-30).

(e) Disconnect the electrical harness.

(f) Install protective caps over the electrical connectors.

(g) Loosen then remove the cable clamp attaching the bridle cable to the aileron cable.

Note: Note the location of the cable clamp to the elevator cable for re-installation.

(h) Remove the bolts, washers, and locknuts attaching the cable guard to the servo support bracket.

(i) Remove the bolts, washers, and locknuts attaching the pitch servo to the support bracket.

(j) Remove the pitch servo from the airplane.

(2) Installation

(a) Put the airplane in a climate controlled hangar.

(b) Make the airplane level (refer to Chapter 8-20).

(c) Let the temperature of the airplane stabilize for a minimum of 3 hours before doing any inspection, rigging, or adjustments.

(d) Carefully secure the elevator in the neutral position at the outboard end of the horizontal stabilizer using wooden blocks and clamps to hold it in place.

(e) Correctly orient then attach the pitch servo to the mounting bracket using bolts, washers, and locknuts.

(f) Install the cable guard using bolts, washers, and locknuts.

(g) Remove the protective caps from the electrical connectors.

(h) Connect the electrical harness.

(i) Clean the bridle cable, elevator cable and clamp with isopropyl alcohol.

(j) Attach the bridle cable to the elevator cable. Tension the bridle cable 15 lbs ± 3 lbs.

(k) Install the cable clamps and torque to 60 in-lbs. Check that the fastener set is fully seated and will not rotate by hand.

(l) Torque the cable clamps for a final value between 185 and 195 in-lbs, measured from the nut.

(m) Make sure the gap between the two halves of the tightened bridle cable clamp is a minimum of 0.005".

(n) Remove the blocks and clamps securing the elevator.

(o) Ensure there is a minimum of 0.25" between the bridle cable clamps and adjacent structures through the systems entire range of motion.

(p) Connect a ground power unit to the airplane (refer to Chapter 24-40).

(q) Reset the AUTOPILOT circuit breaker.

(r) Do the autopilot operational checkout. Refer to 22-10.2.I.

(s) Install the pressure bulkhead access panel (refer to Chapter 21-30).

F. Yaw Servo

(1) Removal

(a) Pull the AUTOPILOT circuit breaker.

(b) Verify the BATT 1 and BATT 2 switches are set to off.

(c) Disconnect external electrical power from the airplane (refer to Chapter 24-40).

(d) Remove the pressure bulkhead access panel (refer to Chapter 21-30).

(e) Disconnect the electrical harness.

(f) Install protective caps over the electrical connectors.

(g) Loosen then remove the cable clamp attaching the bridle cable to the aileron cable.

Note: Note the location of the cable clamp to the rudder cable for re-installation.

(h) Remove the bolts, washers, and locknuts attaching the cable guard to the servo support bracket.

(i) Remove the bolts, washers, and locknuts attaching the yaw servo to the support bracket.

(j) Remove the yaw servo from the airplane.

(2) Installation

(a) Put the airplane in a climate controlled hangar.

(b) Make the airplane level (refer to Chapter 8-20).

(c) Let the temperature of the airplane stabilize for a minimum of 3 hours before doing any inspection, rigging, or adjustments.

(d) Remove the crew carpet (refer to Chapter 25-10).

(e) Remove access panel 3LC (refer to Chapter 6).

(f) Position the rudder in the neutral position then install a rigging pin into the rudder limiter bracket.

(g) Correctly orient then attach the yaw servo to the mounting bracket using bolts, washers, and locknuts.

(h) Install the cable guard using bolts, washers, and locknuts.

(i) Remove the protective caps from the electrical connectors.

(j) Attach the electrical harness.

(k) Clean the bridle cable, rudder cable and clamp with isopropyl alcohol.

(l) Attach the bridle cable to the rudder cable. Tension the bridle cable 15 lbs ± 3 lbs.

(m) Install the cable clamps and torque to 60 in-lbs. Check that the fastener set is fully seated and will not rotate by hand.

(n) Torque the cable clamps for a final value between 185 and 195 in-lbs, measured from the nut.

(o) Make sure the gap between the two halves of the tightened bridle cable clamp is 0.005” or less. Refer to Chapter 22-10.2.H.

(p) Remove the rigging pin from the rudder limiter bracket.

(q) Ensure there is a minimum of 0.25” between the bridle cable clamps and adjacent structures through the systems entire range of motion.

(r) Connect a ground power unit to the airplane (refer to Chapter 24-40).

(s) Reset the AUTOPILOT circuit breaker.

(t) Do the autopilot operational checkout. Refer to 22-10.2.I.

(u) Install the pressure bulkhead access panel (refer to Chapter 21-30).

(v) Install access panel 3LC (refer to Chapter 6).

(w) Install the crew carpet (refer to Chapter 25-10).

G. Pusher Servo

(1) Removal

(a) Verify the BATT 1 and BATT 2 switches are set to off.

(b) Disconnect external electrical power from the airplane (refer to Chapter 24-40).

(c) Remove the pressure bulkhead access panel (refer to Chapter 21-30).

(d) Disconnect the electrical harness.

(e) Install protective caps over the electrical connectors.

(f) Loosen then remove the cable clamp attaching the bridle cable to the elevator cable.

Note: Note the location of the cable clamp to the pusher cable for re-installation.

(g) Remove the bolts, washers, and locknuts attaching the cable guard to the servo support bracket.

(h) Remove the bolts, washers, and locknuts attaching the pusher servo to the support bracket.

(i) Remove the pusher servo from the airplane.

(2) Installation

(a) Put the airplane in a climate controlled hangar.

(b) Make the airplane level (refer to Chapter 8-20).

(c) Let the temperature of the airplane stabilize for a minimum of 3 hours before doing any inspection, rigging, or adjustments.

(d) Carefully secure the elevator in the neutral position at the outboard end of the horizontal stabilizer using wooden blocks and clamps to hold it in place.

(e) Correctly orient then attach the pusher servo to the mounting bracket using bolts, washers, and locknuts.

(f) Install the cable guard using bolts, washers, and locknuts.

(g) Remove the protective caps from the electrical connectors.

(h) Connect the electrical connectors.

(i) Clean the bridle cable, elevator cable, and clamp with isopropyl alcohol.

(j) Attach the bridle cable to the elevator cable. Tension the bridle cable 15 lbs ± 3 lbs.

(k) Install the cable clamps and torque to 60 in-lbs. Check that the fastener set is fully seated and will not rotate by hand.

(l) Torque the cable clamps for a final value between 185 and 195 in-lbs, measured from the nut.

(m) Make sure the gap between the two halves of the tightened bridle cable clamp is 0.005” or less. Refer to Chapter 22-10.2.H.

(n) Remove the blocks and clamps securing the elevator.

(o) Ensure there is a minimum of 0.25” between the bridle cable clamps and adjacent structures through the systems entire range of motion.

(p) Connect a ground power unit to the airplane (refer to Chapter 24-40).

(q) Do the Stall Prevention System Operational Check, refer to Chapter 31-20.2.F.

(r) Do the Pusher Servo Clutch Override Check, refer to 22-10.2.J.

(s) Install the pressure bulkhead access panel (refer to Chapter 21-30).

Figure 22-10.4: Autopilot and Pusher Servos (Sheet 1 of 4)

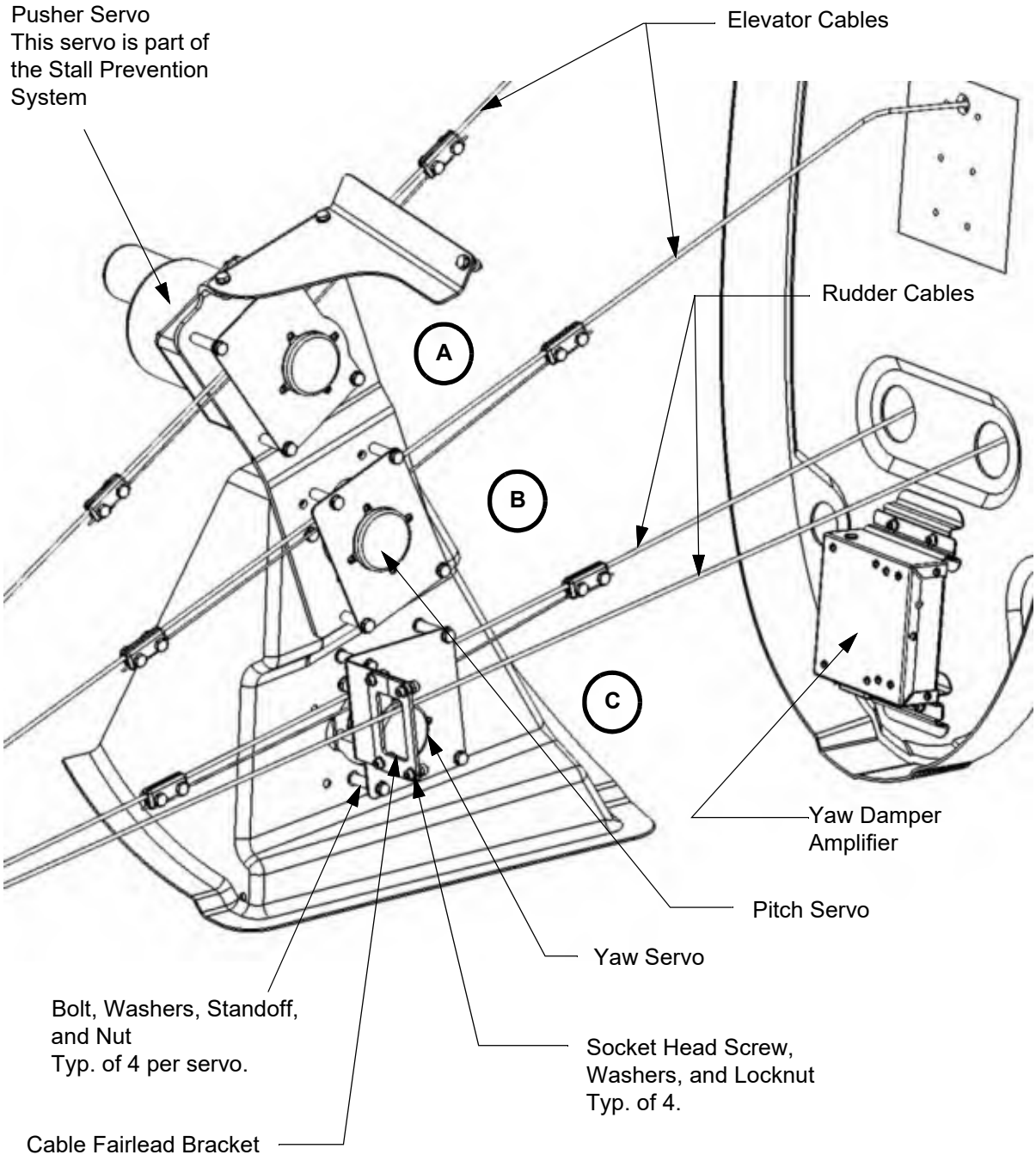

Figure 22-10.4: Autopilot and Pusher Servos (Sheet 2 of 4)

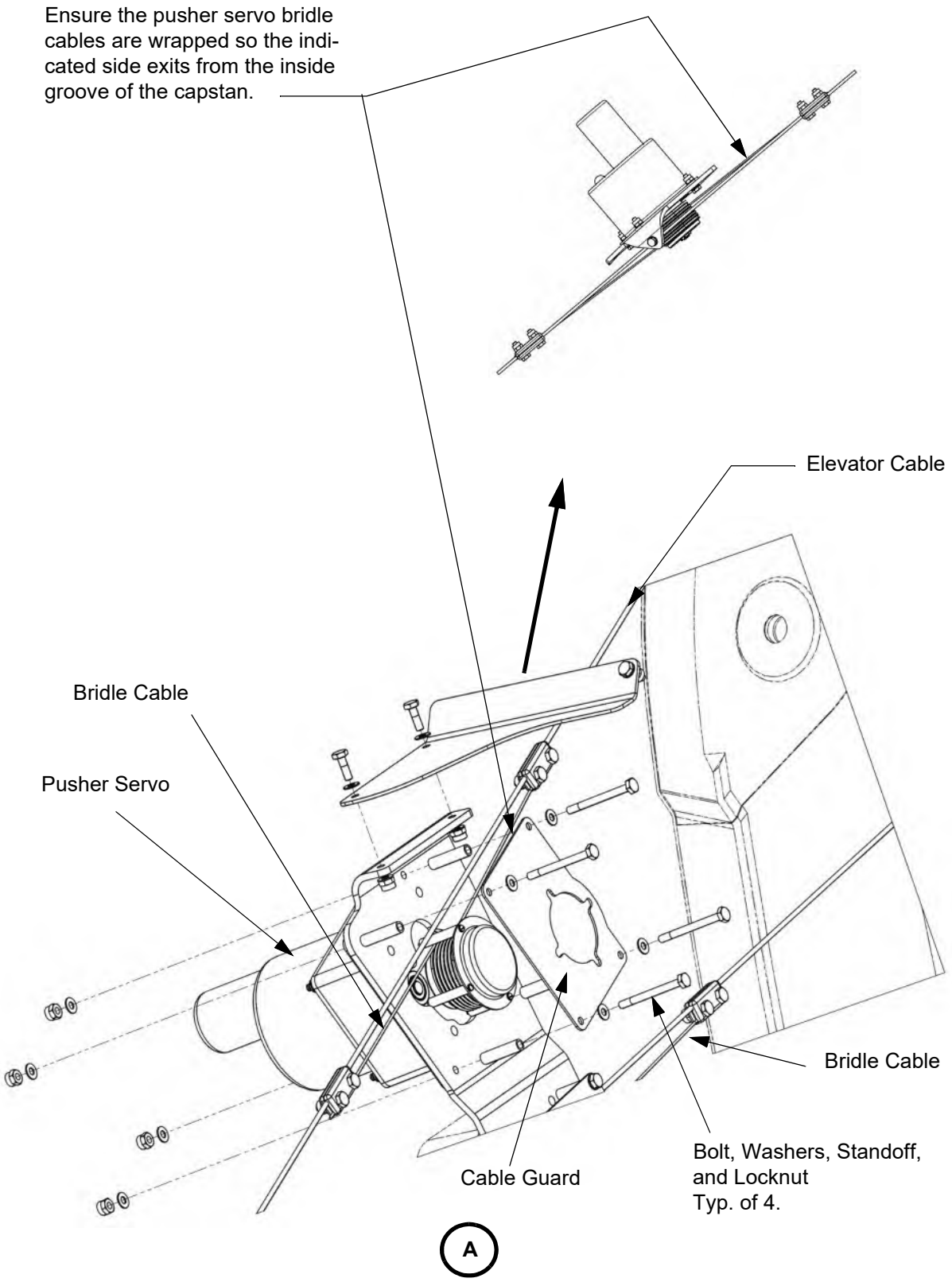

Figure 22-10.4: Autopilot and Pusher Servos (Sheet 3 of 4)

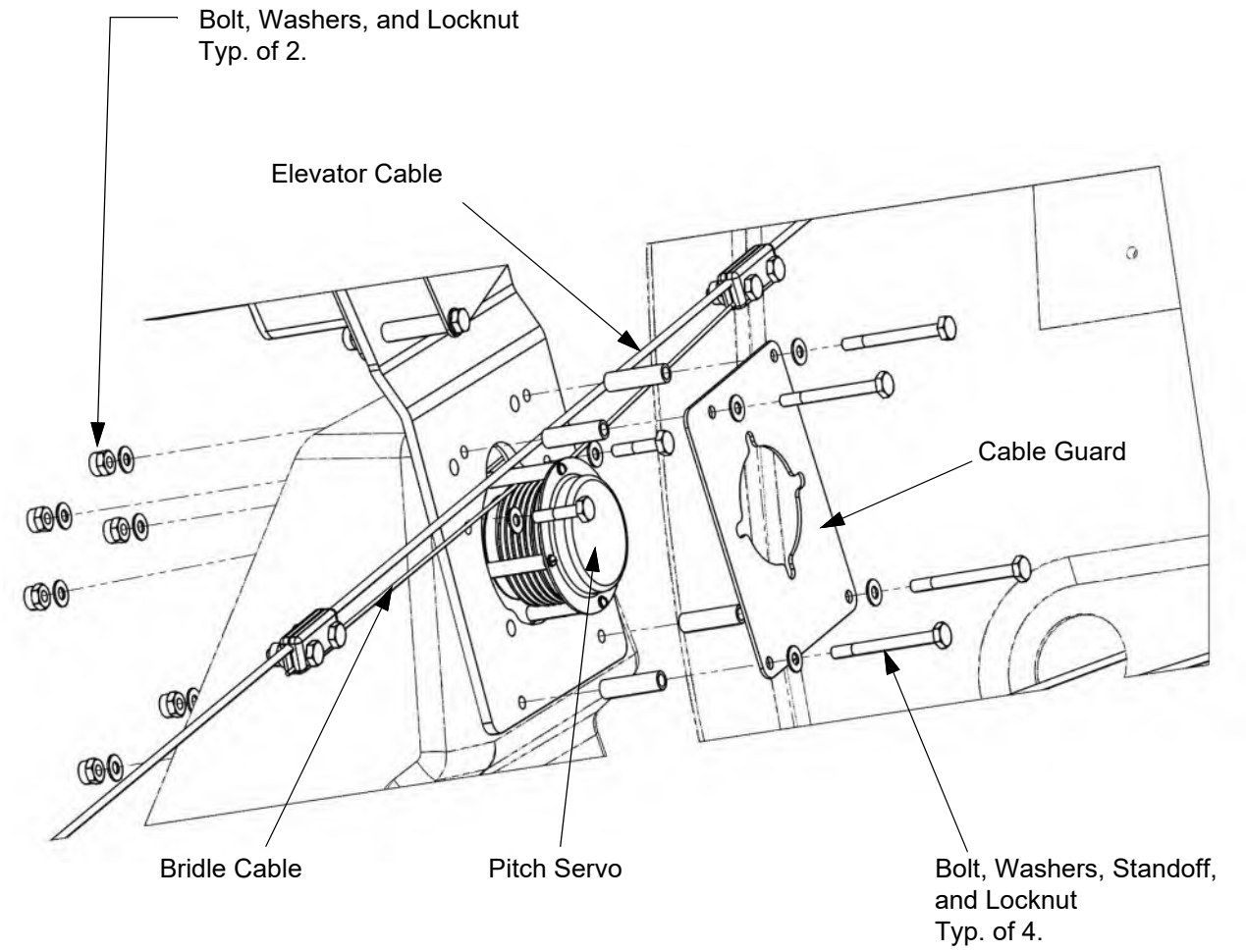

B

Figure 22-10.4: Autopilot and Pusher Servos (Sheet 4 of 4)

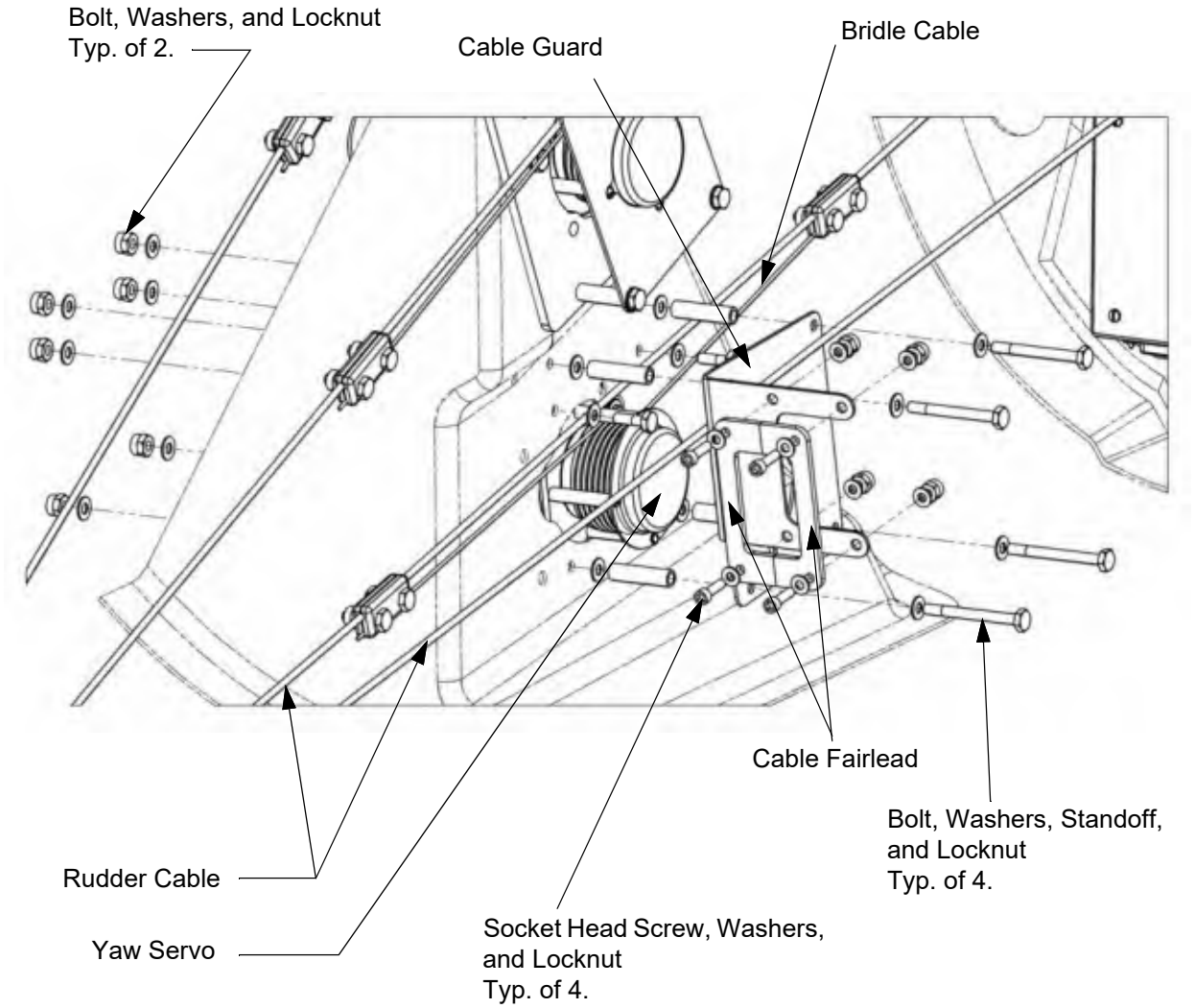

C

H. Bridle Cables

(1) Removal

(a) Remove the servo from the airplane.

(b) Remove the capstan cable guards and cover.

(c) Unwrap the cable from around the capstan.

(d) Loosen the center ball set screw.

(e) Remove the bridle cable.

(2) Installation

(a) Depress the center ball to the bottom of the hole in the capstan.

(b) Tighten the set screw.

(c) Wrap the bridle cable around the capstan.

Note: The bridle cables shall exit the capstan forward and aft at either the top or bottom of the capstan, refer to Table 22-10.1. Refer to Figure 22-10.5 for typical servo orientation in the aircraft.

Note: The roll servo bridle cable is not symmetric by design. With the bridle cable installed on the roll servo, the longer end of the cable shall exit forward on the capstan.

Figure 22-10.5: Bridle Cables

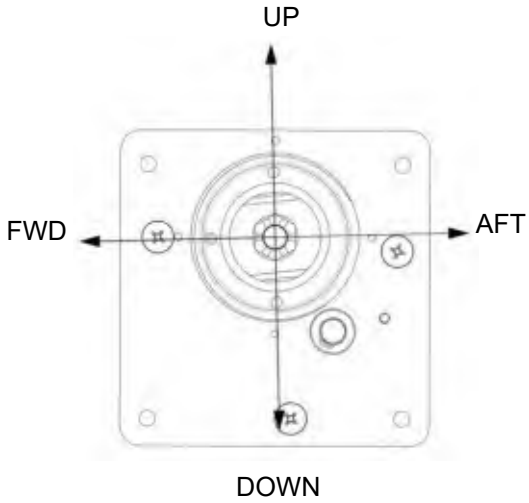

Table 22-10.1: Bridle Cables

Servo	Total Number of Wraps	Bridle Cable Exit Location
Roll	4	Bottom
Pitch	5	Top
Yaw	5	Top
Pusher	5	Top

(d) Install the capstan cable guards and cover.

(e) Install the servo.

I. Autopilot Operational Checkout

(1) Ensure the flight control cables are correctly rigged.

(2) Ensure there is a minimum of 0.25” between the bridle cable clamps and adjacent structures through the systems entire range of motion.

(3) Ensure cables do not rub on the fairleads during normal operation.

(4) Ensure that each system operates freely and smoothly with no binding or restriction.

(5) Verify the servo clutch torque settings are correct (refer to the following table).

Table 22-10.2: Servo Clutch Setting

Servo	Torque Setting (in-lbs)
Roll	50 ± 5
Pitch	35 ± 5
Yaw	50 ± 5
Pusher	100 ± 5

Note: The airplane must not be moved for a minimum of three minutes during initialization of the ADAHRS

(6) Apply airplane power and engage the A/P and Trim switches. Verify that:

(a) The programmer/computer self test screen is briefly displayed.

(b) If the ADAHRS is initializing, the “ADAHRS INITIALIZING” screen will appear.

(c) After the ADAHRS has finished its initialization, the “AP READY” screen is displayed.

(7) Push the “AP” button on the programmer/computer and verify:
  (a) The “AP”, “FD”, and “YD” indicators.
  (b) The servos engage.
  (c) “ROLL” and “PITCH” are displayed on the programmer/computer display.

(8) Center the heading bug on the NAV display and press the “HDG” button on the programmer/computer. Verify that:
  (a) The aileron controls move in response to the movement of the HDG bug.
  (b) The roll servo can be overpowered.
  (c) No excessive play exists in the control system and/or between the control system and the roll servo.

(9) Push the “VS” button and observe “VS 0” is displayed on the programmer/computer.

(10) Push the “UP” button until “↑ 500” displays on the programmer/computer. Verify that:
  (a) The steering bar on the PFD moves up.
  (b) The control wheel moves slowly aft.

(11) Push the “DOWN” button until “↓ 500” displays on the programmer/computer. Verify that:
  (a) The steering bar on the PFD moves down.
  (b) The control wheel moves slowly forward.
  (c) The pitch servo can be overpowered.
  (d) No excessive play exists in the control system and/or between the control system and the pitch servo.

(12) Center the yaw trim control knob on the pilot instrument panel so the rotational travel is equally divided.

(13) Push the “AP” button and observe:
  (a) The “AP”, “FD”, and “YD” indicators are lighted.
  (b) The yaw servo.
    - If the yaw servo is running, adjust the small screw in the top of the yaw damper until the movement is nullified and no longer runs in either direction.
    - If the yaw servo is not running continue to the next step.
  (c) When the trim knob is rotated clockwise, the right rudder pedal moves slowly forward and the left rudder pedal moves slowly aft.
  (d) When the trim knob is rotated counterclockwise, the left rudder pedal moves slowly forward and the right rudder pedal moves slowly aft.
  (e) The yaw servo can be overpowered.

(14) Re-center the yaw trim knob.

(15) Push the “AP” button and verify the “AP”, “FD”, and “YD” indicators are lighted.

(16) Push the “AP Disconnect Switch” (located on the control wheel) and verify:
  (a) That the AP and YD indicators are off.
  (b) The FD indicators is on.

(c) An aural tone is heard.

(d) A voice annunciation is heard.

(17) Push the “AP” button and verify the “AP”, “FD”, and “YD” indicators are lighted.

(18) Press and hold the control wheel steering switch (located on the control wheel) and observe:

(a) That all the servos are disengaged and the controls are free.

(b) “CWS” is annunciated on the programmer/computer.

(c) The servos re-engage when the control wheel steering switch is released.

(19) Push the Go Around (GA) switch (located on the left power lever) and observe:

(a) The “FD” annunciator lights on the programmer/computer.

(b) The flight director steering bar on the PFD moves up approximately 8°.

(20) Move each segment of the trim command switch fore and aft. Verify that elevator trim does NOT move.

(21) Move both segments of the trim command switch forward. Verify that elevator trim runs nose down.

(22) With the electric trim running either nose up or nose down, press and hold the A/P Disconnect/Trim Interrupt switch. Verify that:

(a) Trim motion stops.

(b) The trim motion resume when the A/P Disconnect/Trim Interrupt switch is released.

(c) Overpower the pitch trim by manually restraining the control wheel. Activate the electric trim up and down and observe that the trim servo clutch can be overpowered.

J. Pusher Servo Clutch Override Check

(1) Check and note the pusher servo bridle cable tensions.

(2) Verify pusher clutch can be overridden from the yoke using the Stall Test switch:

(a) Connect external electrical power to the airplane (refer to Chapter 24-40).

(b) Set the BATT 1 and BATT 2 switches to ON.

(c) While holding the Stall Test switch, apply force to overcome the servo clutch. Apply force suddenly to achieve highest loading on cable clamps.

(d) Allow pusher to run unrestrained to the stop with the stall test switch to induce dynamic loading of the cable clamps as the pusher overcomes the servo clutch.

(3) Check the pusher servo bridle cable tensions and make sure they have not changed.

(4) Set BATT 1 and BATT 2 to off (refer to Chapter 24-40).

(5) Disconnect external power from the airplane.

K. Servo Clutch Adjustment

If the servo is not installed in the airplane put the servo in a holding fixture or soft jawed vise with the capstan side of the base plate up.

(1) Loosen or remove the bridle cables from the control cable.
(2) Remove the capstan cable guards from the servo.
(3) Take an initial tension measurement.
(4) Remove the cotter pin from the end of the servo shaft then remove the nut and shim washer(s).
(5) Install or replace tension washers to give the number and thickness shown in the following table.

Table 22-10.3: Servo Tension Washer

in-lbs	Exact Tension Washers		Suggested Shim Washers
	0.032 Quantity	0.040 Quantity	
0-15	1	1	0.005-0.010
16-20	0	2	0.005-0.010
21-25	3	0	0.010
26-32	1	2	0.005-0.010
33-43	0	3	0.010
44-52	3	1	0.010
53-60	2	2	0.005
61-75	2	2	0.010
76-100	2	2	0.010

(6) Reinstall the shim washer(s) and nut then tighten the nut to a starting position and temporarily install a cotter pin.
(7) Insert the pins on the 6622-1 tool into the index holes on the servo capstan then insert a torque wrench drive lug into the tool.

Note: For the pusher servo only, use the 6622-1 tool with the 6621-1 tool.

(8) Energize the servo solenoid and motor then read the output torque on the torque wrench.

(9) Tighten or loosen the nut to establish the specified torque. If the torque cannot be obtained with the nut castellations aligned for the cotter pin, remove or add shim washer(s) to change the nut height.

(10) Replace and secure the cotter pin.

(11) Install the bridle cable then install the cable guards and cover.

(12) Do the Pusher Servo Clutch Override Check, refer to 22-10.2.J.

Figure 22-10.5: Servo Torque Setting

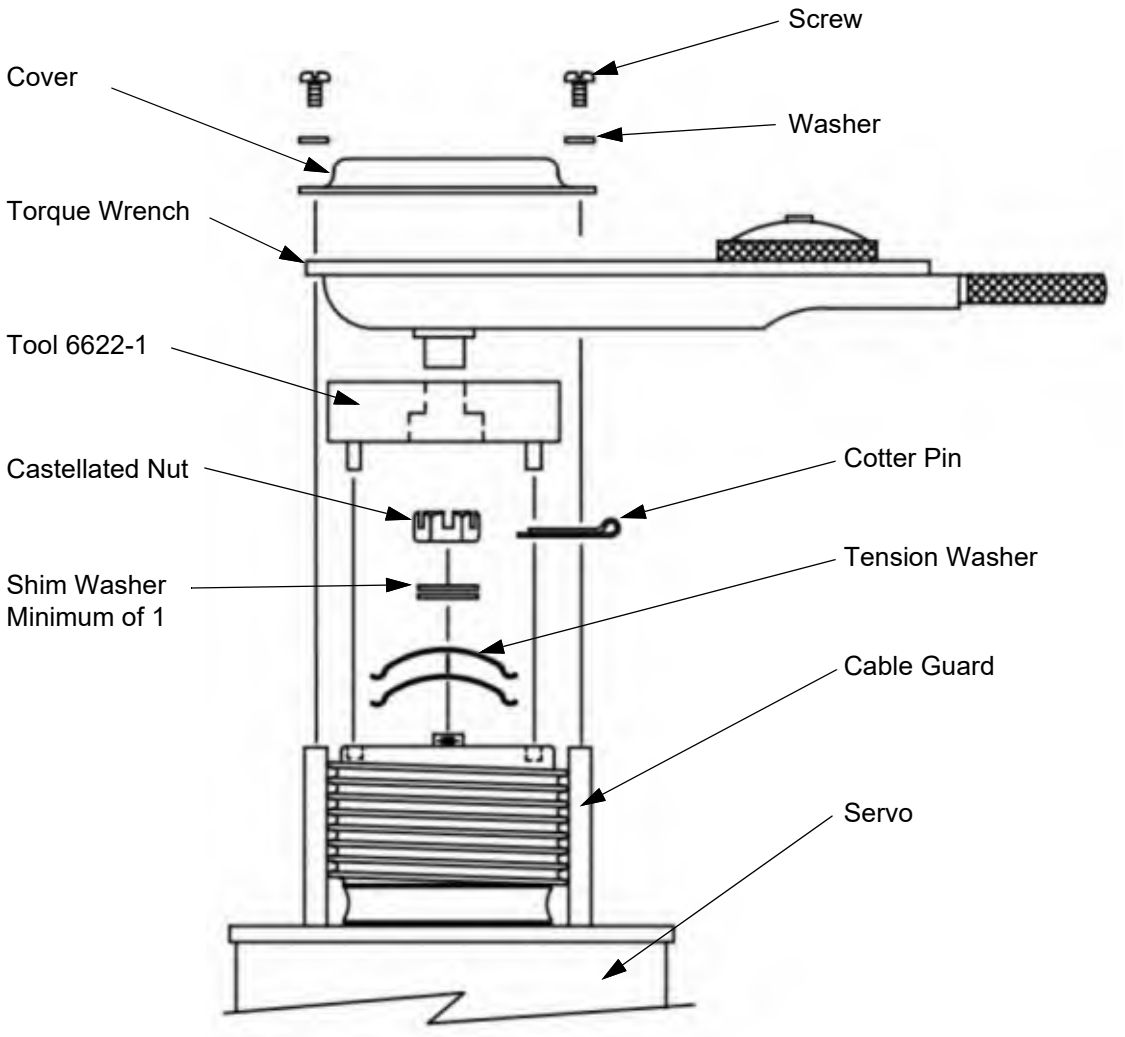

L. Servo Bridle Cable Tension Check

(1) Put the airplane in a climate controlled hangar.

(2) Make the airplane level (refer to Chapter 8-20).

(3) Let the temperature of the airplane stabilize for a minimum of 3 hours before doing any inspection, rigging, or adjustments.

(4) Remove the crew carpet (refer to Chapter 25-10).

(5) Remove access panel 3LC (refer to Chapter 6).

(6) Position the rudder in the neutral position then install a rigging pin into the rudder limiter bracket.

(7) Remove the left and right wing tips (refer to Chapter 57-30).

(8) Install rigging pins into the left and right aileron bellcranks.

(9) Carefully secure the elevator in the neutral position at the outboard end of the horizontal stabilizer using wooden blocks and clamps to hold it in place.

(10) Remove the pressure bulkhead access panel (refer to Chapter 21-30).

(11) Use a tensiometer on the bridle cable to either side of the servo to ensure the bridle cable tension is 15 lbs ± 3 lbs.

(12) Remove the rigging pins from the left and right aileron bellcranks.

(13) Install the left and right wing tips (refer to Chapter 57-30).

(14) Remove the blocks and clamps securing the elevator.

(15) Remove the rigging pin from the rudder bellcrank bracket.

(16) Install the left and right wing tips (refer to Chapter 57-30).

(17) Install the pressure bulkhead access panel (refer to Chapter 21-30).

(18) Install access panel 3LC (refer to Chapter 6).

(19) Install the crew carpet (refer to Chapter 25-10).

This Page Intentionally Left Blank

E1000 GX/AX GARMIN AUTOPILOT

1. Description

(SN: K011 and On, or K003 - K010 with SB-0017)

The Garmin GFC 700 is an advanced, three axis, ADAHRS-based automatic flight control system (AFCS) that provides flight director, autopilot, yaw damper, and automatic electric pitch and yaw trim capabilities. This system also provides advanced autopilot modes included envelope protection, auto-level mode, and emergency descent. The user interface to the GFC 700 is provided by the GMC 710/711. Servo motors mechanically linked to the aircraft's flight controls apply the control forces based upon the GFC 700's commands. The roll servo is coupled to the ailerons, the pitch servo is coupled to the elevator, and the yaw servo is coupled to the rudder. The system has dual-channel digital self-monitoring technology. If the two channels don't agree, the autopilot will promptly disconnect in a "fail-passive" state and alert the pilot to retake control of the aircraft.

While the autopilot is disengaged the GFC 700 system will monitor the aircraft's attitude and airspeed and will automatically assist the pilot in returning to a normal flight envelope whenever pitch or roll deviations exceed predefined limits. The Electronic Stability Protection (ESP) system will apply control force, perceived as control force resistance, in the direction assisting in restoring the aircraft to within the ESP limits, including Overspeed Protection. ESP can be temporarily deactivated by pressing AP/TRIM DISC or holding the CWS button on the control wheel. The AP/TRIM DISC switch also interrupts the pusher system and disconnects all manual trim. ESP can be deactivated from the set-up page on the MFD.

While the autopilot is engaged the GFC 700 Underspeed Protection (USP) monitors for an underspeed condition, which is a low airspeed condition prior to or concurrent with stall warning. When an underspeed condition is detected the autopilot will implement a correction to increase airspeed by pitching the aircraft down. This pitch command will be a gentle nudging of the aircraft nose down. The activation criteria for USP changes based on selected flight director mode which is either classified as altitude critical or non-altitude critical. In non-altitude critical modes, USP is triggered by an indicated airspeed based on flap position and ice mode. In altitude critical modes, USP activation is delayed until stick shaker activation to allow for tracking of the programmed flight path as long as possible. Activation of USP will be annunciated on both PFDs as well as with an aural alert. If the underspeed condition could not be corrected and the airspeed continues to decrease, the aircraft shaker/pusher system will engage at its normal set points. At activation of the stick pusher the autopilot system will disconnect and allow the stall computers to provide a push to prevent a stall.

The GFC 700 system Overspeed Protection (OSP) monitors for an over speed condition when the autopilot is engaged. An overspeed condition is defined as an airspeed exceeding the Vmo/Mmo limits established in the Airplane Flight Manual (AFM). When an overspeed condition is detected the autopilot will implement a correction to decrease airspeed by pitching up. This pitch command will be a gentle nudging of the aircraft nose up. Activation of this mode will be annunciated on both PFDs as well as with an aural alert.

While the autopilot is engaged, the GFC 700 system Emergency Decent Mode (EDM) will be monitoring for an emergency situation in which the pilot may be suffering from the effects of hypoxia at high altitude and is unable to command the aircraft. Once all of the conditions for activation are met, which includes a cabin altitude above 15,000 ft, aircraft pressure altitude above 14,900 ft, and system prompts that the pilot does not acknowledge, the Emergency Descent Mode will be activated. When EDM is activated the autopilot will perform a 90 degree left turn and pitch the nose down to descend until leveling off at 15,000 ft MSL. If EDM stays active the aircraft will remain at 15,000 ft MSL and heading hold until the autopilot is disengaged. Activation of this mode will be annunciated on both PFDs as well as with an aural alert.

Return to Level Mode (Auto-Level) is activated by pressing a dedicated “AUTO-LEVEL” button located on the instrument panel. When activated, this function will engage the autopilot if it is not already engaged, and apply corrections to bring the aircraft back to straight and level flight provided the aircraft is within a flight envelope of ±75° in roll and ±50° in pitch. There is also a automatic activation of Return to Level Mode (Auto-Level). Auto activation occurs when the aircraft exceeds the ESP limits for more than 10 seconds of the last 20 seconds.

Low bank mode is activated /deactivated by pressing the BANK button on the GMC 710/711 or automatically when above 25,000 ft. When active, low bank mode will limit the allowed bank angle to 15°, which is half of the normally allowed limit.

The coupled go-around feature allows for the autopilot to remain engaged during a missed approach. While the autopilot is engaged and the TO/GA button is activated, the autopilot will initiate a go-around by automatically activating the missed approach procedure, pitching up and climbing to the altitude selected in the altitude preselect.

The system consists of the following components:

A. Garmin GMC 710/711 Automatic Flight Control System (AFCS) Mode Controller

The GMC 710/711 AFCS Mode Controller is installed in the top-center of the instrument panel and provides primary control of autopilot modes. The GMC 711 adds Autothrottle mode and speed control. The mode controller is powered by 28VDC through the AUTOPILOT circuit breaker.

B. Garmin GIA 64 Integrated Avionics Computer (IAC) (x2)

Refer to chapter 34-50.

C. Garmin GSA 81 Roll Servo

The GSA 81 Roll Servo is located under the cockpit floorboards. It provides control over the roll axis of the airplane. The roll servo consists of the servo, a capstan, and a slip clutch. The slip clutch allows the pilot to override the roll servo. The roll servo receives data from the dual GIA 64 IACs and is powered by 28VDC through the AUTOPILOT circuit breaker.

D. Garmin GSA 80 Pitch Servo

The GSA 80 Pitch Servo is located behind the aft pressure bulkhead and shares a mounting structure with the GSA 80 Yaw Servo and the S-Tec Pusher Servo. It provides control over the pitch axis of the airplane. The pitch servo consists of the servo, a capstan, and a slip clutch. The slip clutch allows the pilot to override the pitch servo. The pitch servo receives data from the dual GIA 64 IACs and is powered by 28VDC through the AUTOPILOT circuit breaker.

E. Garmin GSA 80 Yaw Servo

The GSA 80 Yaw Servo is located behind the aft pressure bulkhead and shares a mounting structure with the GSA 80 Pitch Servo and the S-Tec Pusher Servo. It provides control over the yaw axis of the airplane. The yaw servo consists of the servo, a capstan, and a slip clutch. The slip clutch allows the pilot to override the yaw servo. The yaw servo receives data from the dual GIA 64 IACs and is powered by 28VDC through the AUTOPILOT circuit breaker.

F. Garmin GTA 82 Pitch Trim Adapter

The GTA 82 Pitch Trim Adapter is located behind the aft pressure bulkhead and mounted on a bracket on the right side of the fuselage next to the GTA 82 Yaw Trim Adapter. It provides both manual and automatic control of the elevator trim actuator and receives input from the pilot and copilots trim switches. The GTA 82 also interfaces with both GIA 64 units to perform the automatic trim control function of the autopilot. The pitch trim adapter is powered by 28VDC through the ELEV TRIM circuit breaker and gives the GFC 700 control over elevator trim.

G. Garmin GTA 82 Yaw Trim Adapter

The GTA 82 Yaw Trim Adapter is located behind the aft pressure bulkhead and mounted on a bracket on the right side of the fuselage next to the GTA 82 Pitch Trim Adapter. It provides both manual and automatic control of the rudder trim actuator and receives input from the pilot and copilots trim switches. The GTA 82 also interfaces with both GIA 64 units to perform the automatic trim control function of the autopilot. The yaw trim adapter is powered by 28VDC through the RUD TRIM circuit breaker and gives the GFC 700 control over rudder trim.

H. Garmin GSU 75 ADAHRS (x2)

Refer to chapter 34-20.

I. Garmin GSA 87 Auto Throttle Servo

Refer to chapter 22-30.

2. Maintenance Practices

(SN: K011 and On, or K003 - K010 with SB-0017)

A. Mode Controller

(1) Removal

(a) Pull the AUTOPILOT circuit breaker.

(b) Set the BATT 1 and BATT 2 switches to off.

(c) Disconnect external electrical power from the airplane (refer to Chapter 24-40).

(d) Turn the captured fasteners counter-clockwise to disengage the locking cams.

Note: The GMC 710 uses 4 fasteners, the GMC 711 uses 2 fasteners.

(e) Carefully move the mode controller aft and disconnect the electrical connection.

(f) Remove the mode controller.

(g) Install protective caps over the electrical connectors.

(2) Installation

(a) Connect the electrical connector.

(b) Put the mode controller in position in the instrument panel.

(c) Turn the captured fasteners clockwise to engage the locking cams.

(d) Connect a ground power unit to the airplane (refer to Chapter 24-40).

(e) Reset the AUTOPILOT circuit breaker.

(f) Do the Autopilot Operational Checkout. Refer to 22-11. 2. H.

Figure 22-11.1: Mode Controller

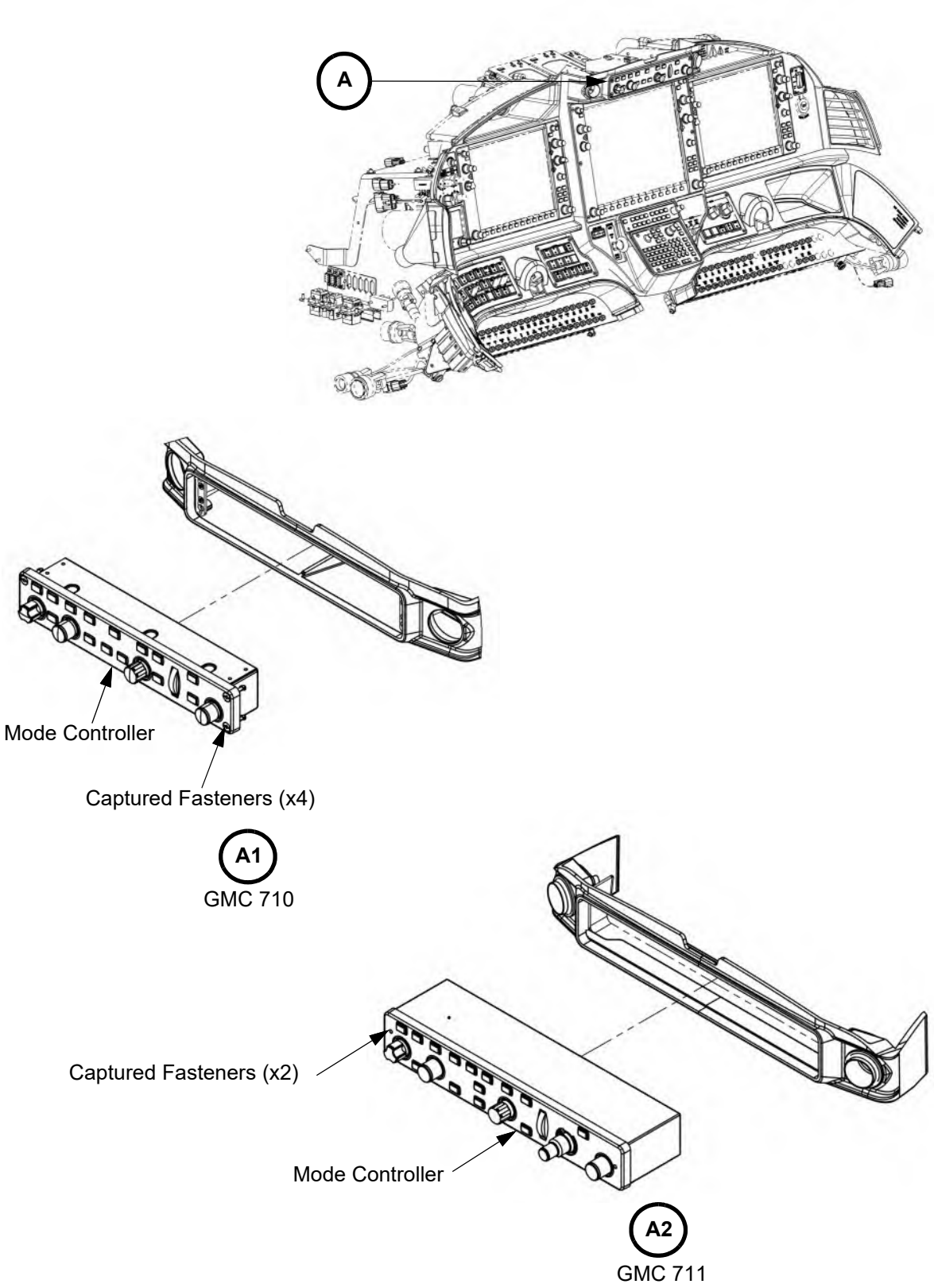

B. Trim Signal Adapter

(1) Removal

Note: With the exception of the circuit breaker, the removal procedure is identical for both Trim Signal Adapters.

(a) Open the RUD TRIM circuit breaker for the rudder trim signal adapter or the ELEV TRIM circuit breaker for the elevator trim signal adapter.

(b) Verify the BATT 1 and BATT 2 switches are set to off.

(c) Disconnect external electrical power from the airplane (refer to Chapter 24-40).

(d) Remove the pressure bulkhead access panel (refer to Chapter 21-30).

(e) Disconnect the electrical connector and install protective caps.

(f) Remove the six screws that attach the signal adapter to the bracket.

(g) Remove the signal adapter.

(2) Installation

Note: With the exception of the circuit breaker, the installation procedure is identical for both Trim Signal Adapters.

(a) Put the signal adapter into position on the bracket and attach it using six socket head screws.

Note: Make sure to connect the ground terminal under the lower aft socket head screw of the Trim Signal Adapter.

(b) Remove the protective caps from the electrical connectors

(c) Connect the electrical connector.

(d) Connect a ground power unit to the airplane (refer to Chapter 24-40).

(e) Close the RUD TRIM circuit breaker for the rudder trim signal adapter or the ELEV TRIM circuit breaker for the elevator trim signal adapter.

(f) Do the Autopilot Operational Checkout (refer to 22-11.2.H).

(g) Install the pressure bulkhead access panel (refer to Chapter 21-30).

Figure 22-11.2: Trim Signal Adapters

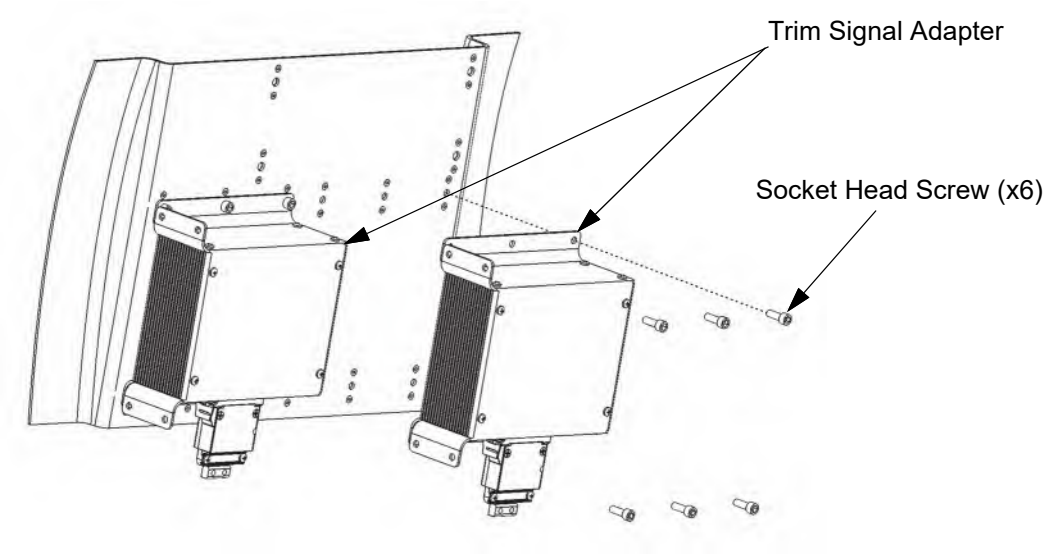

C. Roll Servo

(1) Removal

(a) Pull the AUTOPILOT circuit breaker.

(b) Verify the BATT 1 and BATT 2 switches are set to off.

(c) Disconnect external electrical power from the airplane (refer to Chapter 24-40).

(d) Remove the pilot seat (refer to Chapter 25-10).

(e) Remove the carpet from the pilot foot well (refer to Chapter 25-10).

(f) Remove access panel 3L (refer to Chapter 6).

(g) For aircraft SN: K014, K086 and on, remove the Brake Servo Assembly (refer to Chapter 32-40).

Note: Removal of the Brake Servo Assembly is not required. Carefully positioning it to allow access is permitted.

(h) Disconnect the electrical connector from the servo and install protective caps.

(i) Remove the cable clamps attaching the bridle cable to the aileron cable.

(j) Remove the bolts and washers that attach the servo to the support bracket.

(k) Remove the servo from the airplane.

(2) Installation

(a) Put the airplane in a climate controlled hangar.

Note: Let the temperature of the airplane stabilize for a minimum of 3 hours before doing any inspection, rigging, or adjustments.

(b) Remove the left and right wing tips (refer to Chapter 57-30).

(c) Make sure the ailerons are rigged correctly and the primary cables are tensioned correctly, refer to Chapter 27-00 and 27-10.

(d) Position the ailerons in neutral and install rigging pins into the left and right aileron sectors.

(e) Attach the roll servo to the mounting bracket using bolts and washers. Torque the bolts to 20-25 in-lbs.

(f) Connect the electrical connector.

(g) Clean the bridle cable, aileron cable, and clamp with isopropyl alcohol.

(h) Attach the bridle cable to the aileron cable and install the fasteners finger tight, refer to Figure 22-11.3.

(i) Make sure the bridle cable length is equal on both sides of the servo bracket with the aileron rig pins installed.

CAUTION: Make sure the control cable and bridle cable are fully seated in the grooves the full length of the bridle cable clamp and the fastener set is fully seated against the clamp.

(j) Tension the bridle cable 15-18 lbs.

(k) For clamps with AN-3 bolts, torque the nuts to 45 - 55 in-lbs.

(l) For clamps with AN-5 bolts, do the steps that follow:

(i) Torque the nuts to 60 in-lbs.

(ii) Make sure the fastener set is fully seated against the clamp and will not rotate by hand.

(iii) Torque the nuts to 185 - 195 in-lbs.

Note: Torques are to be measured from the nut.

(m) Make sure the gap between the two halves of the tightened bridle cable clamp is a minimum of 0.005”, refer to Figure 22-11.4, sheet 5.

(n) For installations with fasteners drilled for safety wire, install 0.032” safety wire between each nut and bolt head.

(o) Remove the rigging pins from the left and right aileron sectors.

(p) Ensure there is a minimum of 0.25” between the bridle cable clamps and adjacent structures through the systems entire range of motion.

(q) Make sure the primary cable tensions are still within tolerance, refer to Chapter 27-00.

(r) Install the left and right wing tips (refer to Chapter 57-30).

(s) Connect a ground power unit to the airplane (refer to Chapter 24-40).

(t) Reset the AUTOPILOT circuit breaker.

(u) Do the autopilot operational checkout (refer to 22-11.2.H).

(v) Install the access panel (refer to Chapter 6) and the carpet (refer to Chapter 25-10).

(w) For aircraft SN: K086 and on, install the Brake Servo Assembly (refer to Chapter 32-40).

(x) Install the pilot seat (refer to Chapter 25-10).

Figure 22-11.3: Roll Servo

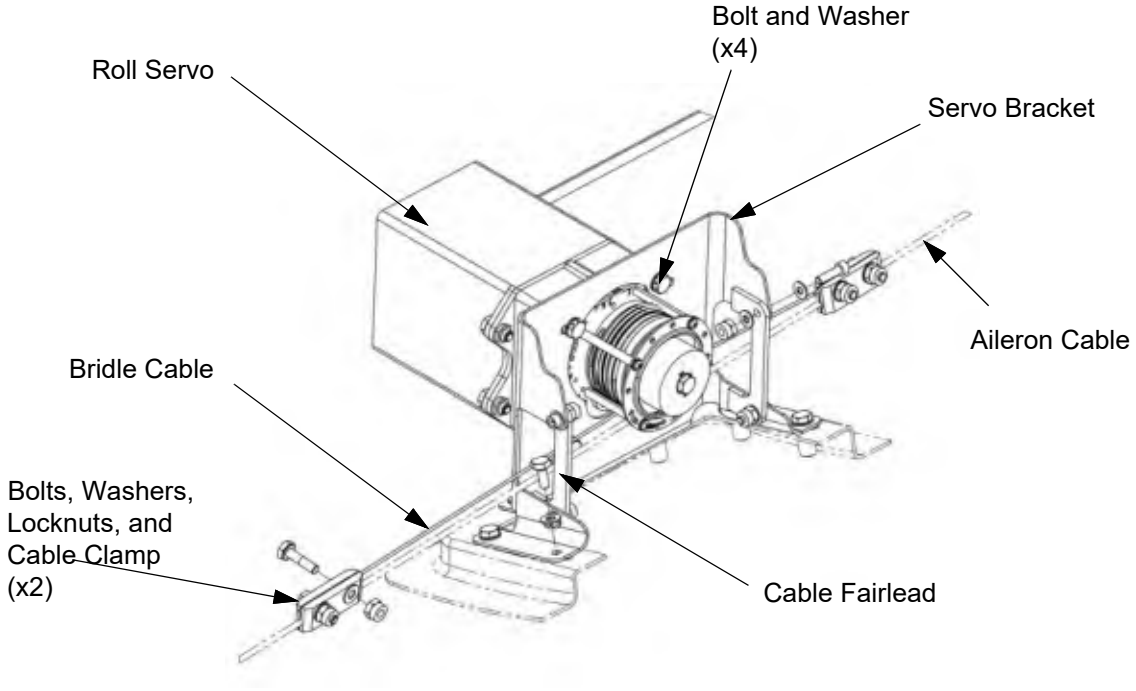

D. Pitch Servo

(1) Removal

(a) Pull the AUTOPILOT circuit breaker.

(b) Verify the BATT 1 and BATT 2 switches are set to off.

(c) Disconnect external electrical power from the airplane (refer to Chapter 24-40).

(d) Remove the pressure bulkhead access panel (refer to Chapter 21-30).

(e) Disconnect the electrical connector from the servo and install protective caps.

(f) Remove the cable clamp attaching the bridle cable to the elevator cable.

(g) Remove the bolts, washers, spacers, and locknuts that attach the cable guard to the servo support bracket.

(h) Remove the bolt, washer, and spacer that attaches the cable guard and pitch servo to the support bracket.

(i) Remove the bolts and washers that attach the pitch servo to the support bracket.

(j) Remove the pitch servo from the airplane.

(2) Installation

(a) Put the airplane in a climate controlled hangar.

Note: Let the temperature of the airplane stabilize for a minimum of 3 hours before doing any inspection, rigging, or adjustments.

(b) Make sure the elevator is rigged correctly and the primary cables are tensioned correctly, refer to Chapter 27-00 and 27-30.

(c) Carefully secure the elevator in the neutral position at the outboard end of the horizontal stabilizer using wooden blocks and clamps to hold it in place.

(d) Attach the pitch servo to the support bracket using bolts and washers. Torque the bolts to 20-25 in-lbs.

(e) Put the cable guard in position and install the bolts, washers, and spacers that attaches the cable guard and pitch servo to the support bracket. Torque the bolt to 20-25 in-lbs.

(f) Connect the electrical connector.

(g) Clean the bridle cable, elevator cable, and clamp with isopropyl alcohol.

(h) Attach the bridle cable to the elevator cable and install the fasteners finger tight, refer to Figure 22-11.4.

(i) Make sure the bridle cable length is equal on both sides of the servo bracket with the elevator in neutral.

CAUTION: Make sure the control cable and bridle cable are fully seated in the grooves the full length of the bridle cable clamp and the fastener set is fully seated against the clamp.

(j) Tension the bridle cable 15-18 lbs.

(k) For clamps with AN-3 bolts, torque the nuts to 45 - 55 in-lbs.

(l) For clamps with AN-5 bolts, do the steps that follow:

(i) Torque the nuts to 60 in-lbs.

(ii) Make sure the fastener set is fully seated against the clamp and will not rotate by hand.

(iii) Torque the nuts to 185 - 195 in-lbs.

Note: Torques are to be measured from the nut.

(m) Make sure the gap between the two halves of the tightened bridle cable clamp is a minimum of 0.005”, refer to Figure 22-11.4, sheet 5.

(n) For installations with fasteners drilled for safety wire, install 0.032” safety wire between each nut and bolt head.

(o) Remove the blocks and clamps securing the elevator.

(p) Ensure there is a minimum of 0.25” between the bridle cable clamps and adjacent structures through the systems entire range of motion.

(q) Make sure the primary cable tensions are still within tolerance, refer to Chapter 27-00.

(r) Connect a ground power unit to the airplane (refer to Chapter 24-40).

(s) Reset the AUTOPILOT circuit breaker.

(t) Do the autopilot operational checkout (refer to 22-11.2.H).

(u) Install the pressure bulkhead access panel (refer to Chapter 21-30).

E. Yaw Servo

(1) Removal

(a) Pull the AUTOPILOT circuit breaker.

(b) Verify the BATT 1 and BATT 2 switches are set to off.

(c) Disconnect external electrical power from the airplane (refer to Chapter 24-40).

(d) Remove the pressure bulkhead access panel (refer to Chapter 21-30).

(e) Disconnect the electrical connector from the servo and install protective caps.

(f) Remove the cable clamp attaching the bridle cable to the rudder cable.

(g) Remove the bolts, washers, and locknuts that attach the cable guard to the servo support bracket.

(h) Remove the bolts and washers that attach the yaw servo to the support bracket.

(i) Remove the yaw servo from the airplane.

(2) Installation

(a) Put the airplane in a climate controlled hangar.

Note: Let the temperature of the airplane stabilize for a minimum of 3 hours before doing any inspection, rigging, or adjustments.

(b) Remove the pilot's seat (refer to Chapter 25-10).

(c) Remove the crew carpet (refer to Chapter 25-10).

(d) For aircraft SN: K003 - K085, remove access panel 3L (refer to Chapter 6).

(e) For aircraft SN: K086 and on, remove the Brake Servo Assembly cover to access the rig pin hole in the panel (refer to Chapter 32-40).

(f) Position the rudder in the neutral position then install a rigging pin into the rudder limiter.

(g) Make sure the rudder is rigged correctly and the primary cables are tensioned correctly, refer to Chapter 27-00 and 27-20.

(h) Attach the yaw servo to the mounting bracket using bolts and washers. Torque the bolts to 20-25 in-lbs.

(i) Install the cable guard using bolts, washers, and spacers.

(j) Connect the electrical connector.

(k) Clean the bridle cable, rudder cable, and clamp with isopropyl alcohol.

(l) Attach the bridle cable to the rudder cable and install the fasteners finger tight, refer to Figure 22-11.4.

(m) Make sure the bridle cable length is equal on both sides of the servo bracket with the rudder in neutral.

CAUTION: Make sure the control cable and bridle cable are fully seated in the grooves the full length of the bridle cable clamp and the fastener set is fully seated against the clamp.

(n) Tension the bridle cable 15-18 lbs.

(o) For clamps with AN-5 bolts, do the steps that follow:

(i) Torque the nuts to 60 in-lbs.

(ii) Make sure the fastener set is fully seated against the clamp and will not rotate by hand.

(iii) Torque the nuts to 185 - 195 in-lbs.

Note: Torques are to be measured from the nut.

(p) Make sure the gap between the two halves of the tightened bridle cable clamp is a minimum of 0.005", refer to Figure 22-11.4, sheet 5.

(q) For installations with fasteners drilled for safety wire, install 0.032" safety wire between each nut and bolt head.

(r) Remove the rigging pin from the rudder limiter.

(s) Ensure there is a minimum of 0.25" between the bridle cable clamps and adjacent structures through the systems entire range of motion.

(t) Make sure the primary cable tensions are still within tolerance, refer to Chapter 27-00.

(u) Connect a ground power unit to the airplane (refer to Chapter 24-40).

(v) Reset the AUTOPILOT circuit breaker.

(w) Do the autopilot operational checkout (refer to 22-11.2.H).

(x) For aircraft SN: K003 - K085, install access panel 3L (refer to Chapter 6).

(y) For aircraft SN: K086 and on, install the Brake Servo Assembly cover to access the rig pin hole in the panel (refer to Chapter 32-40).

(z) Install the crew carpet (refer to Chapter 25-10).

(aa) Install the pilot's seat (refer to Chapter 25-10).

(ab) Install the pressure bulkhead access panel (refer to Chapter 21-30).

F. Pusher Servo

(1) Removal

(a) Verify the BATT 1 and BATT 2 switches are set to off.

(b) Disconnect external electrical power from the airplane (refer to Chapter 24-40).

(c) Open the PUSHER circuit breaker.

(d) Remove the pressure bulkhead access panel (refer to Chapter 21-30).

(e) Disconnect the electrical connector from the servo and install protective caps.

(f) Remove the cable clamp attaching the bridle cable to the elevator cable.

(g) Remove the bolts, washers, and locknuts attaching the cable guard to the servo support bracket.

(h) Remove the bolts, washers, and locknuts attaching the pusher servo to the support bracket.

(i) Remove the pusher servo from the airplane.

(2) Installation

(a) Put the airplane in a climate controlled hangar.

Note: Let the temperature of the airplane stabilize for a minimum of 3 hours before doing any inspection, rigging, or adjustments.

(b) Carefully secure the elevator in the neutral position at the outboard end of the horizontal stabilizer using wooden blocks and clamps to hold it in place.

(c) Make sure the elevator is rigged correctly and the primary cables are tensioned correctly, refer to Chapter 27-00 and 27-30.

(d) Attach the pusher servo to the mounting bracket using bolts, washers, and locknuts.

(e) Install the cable guard using bolts, washers, and locknuts.

(f) Connect the electrical connector.

(g) Clean the bridle cable, elevator cable and clamp with isopropyl alcohol.

(h) Attach the bridle cable to the elevator cable.

CAUTION: Make sure the cable clamp is oriented for maximum clearance with the cable guard.

(i) Make sure the bridle cable length is equal on both sides of the servo bracket with the elevator in neutral.

CAUTION: Make sure the control cable and bridle cable are fully seated in the grooves the full length of the bridle cable clamp and the fastener set is fully seated against the clamp.

(j) Tension the bridle cable 15-18 lbs.

(k) For clamps with AN-3 bolts, torque the nuts to 45 - 55 in-lbs.

(l) For clamps with AN-5 bolts, do the steps that follow:

(i) Torque the nuts to 60 in-lbs.

(ii) Make sure the fastener set is fully seated against the clamp and will not rotate by hand.

(iii) Torque the nuts to 185 - 195 in-lbs.

Note: Torques are to be measured from the nut.

(m) Make sure the gap between the two halves of the tightened bridle cable clamp is a minimum of 0.005”, refer to Figure 22-11.4, sheet 5.

(n) For installations with fasteners drilled for safety wire, install 0.032” safety wire between each nut and bolt head.

(o) Remove the blocks and clamps securing the elevator.

(p) Make sure the primary cable tensions are still within tolerance, refer to Chapter 27-00.

(q) Ensure there is a minimum of 0.25” between the bridle cable clamps and adjacent structures through the systems entire range of motion.

(r) Close the PUSHER circuit breaker

(s) Connect a ground power unit to the airplane (refer to Chapter 24-40).

(t) Do the Stall Prevention System Operational Check, refer to Chapter 31-20.2.F.

(u) Do the Pusher Servo Clutch Override Check, refer to 22-11.2.I.

(v) Install the pressure bulkhead access panel (refer to Chapter 21-30).

Figure 22-11.4: Autopilot and Pusher Servos (Sheet 1 of 5)

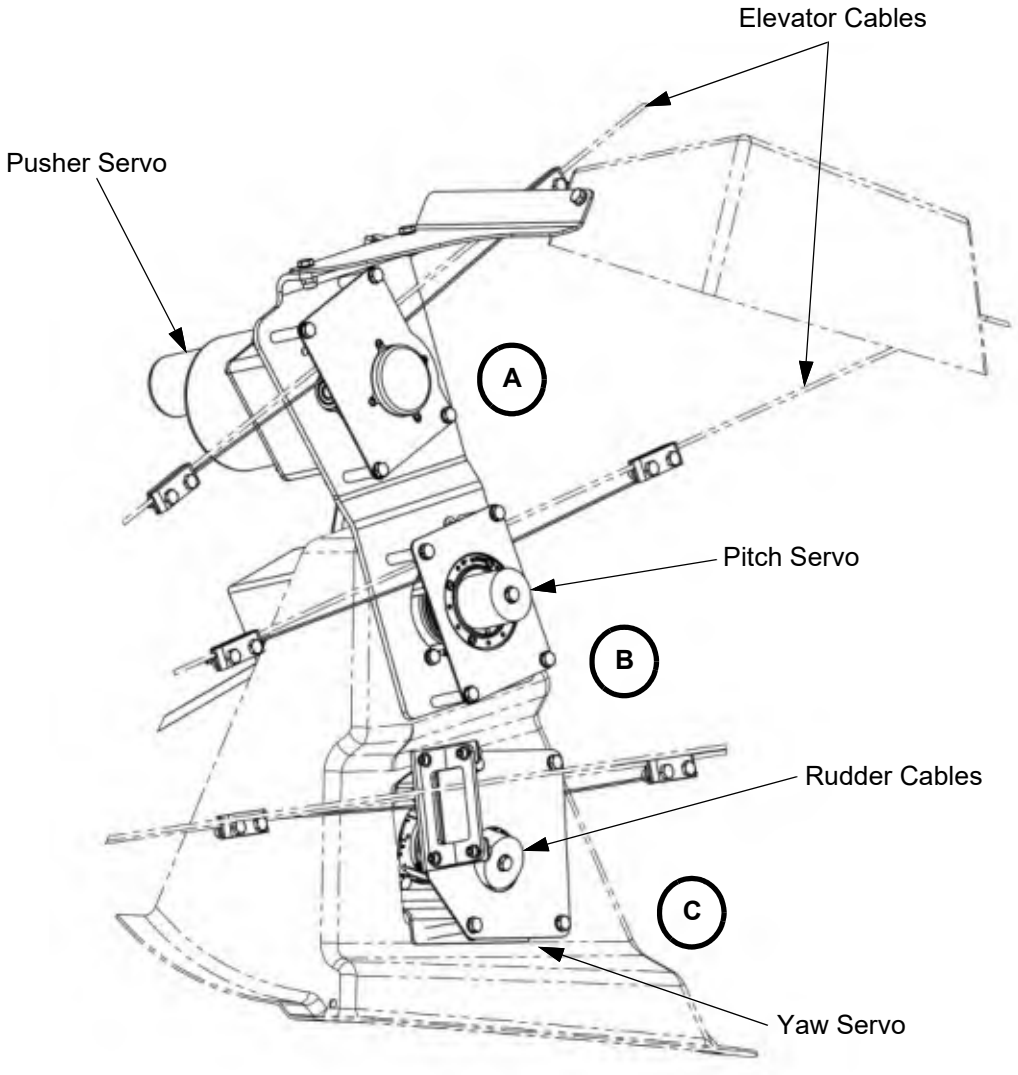

Figure 22-11.4: Autopilot and Pusher Servos (Sheet 2 of 5)

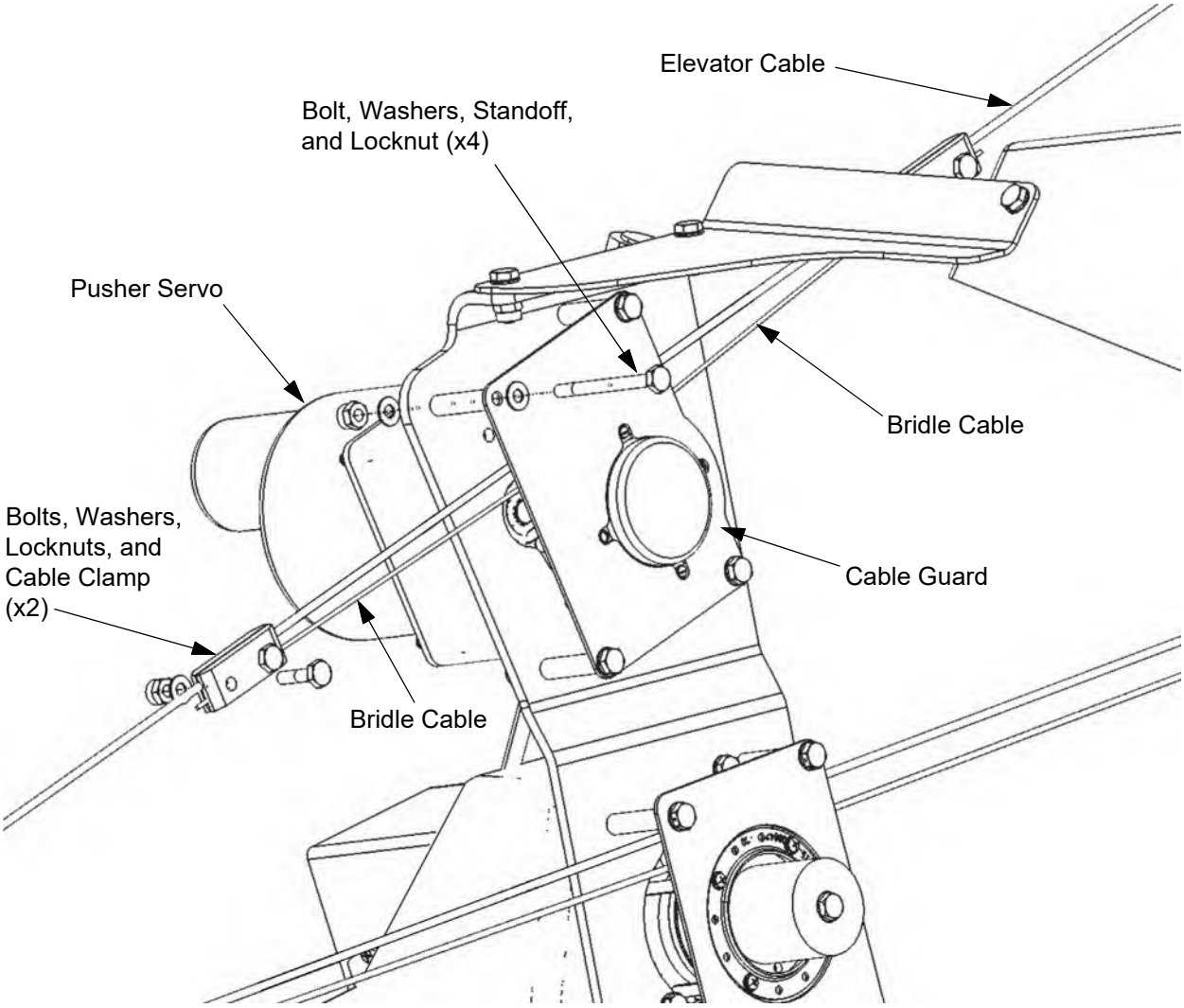

A

Figure 22-11.4: Autopilot and Pusher Servos (Sheet 3 of 5)

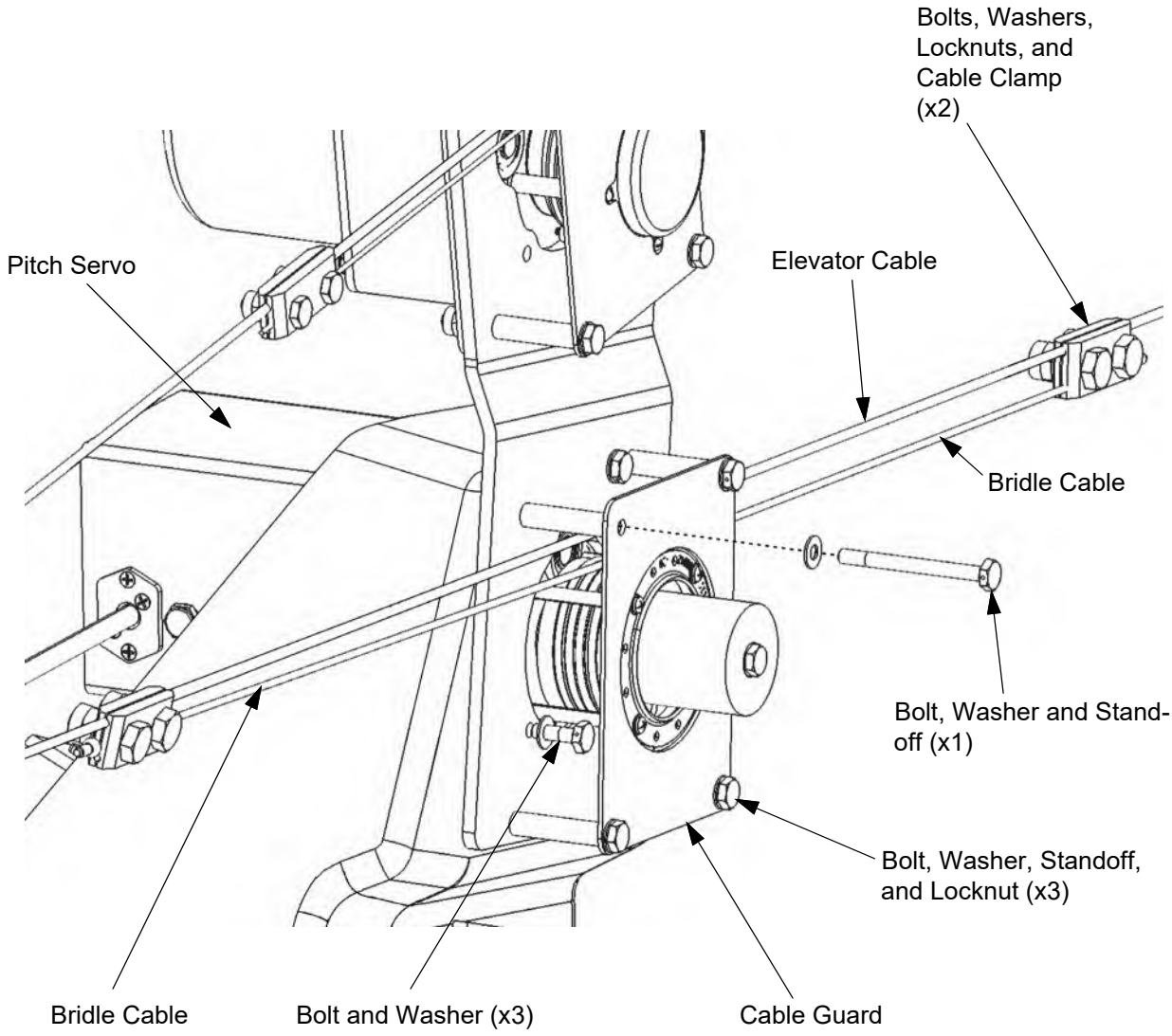

B

Figure 22-11.4: Autopilot and Pusher Servos (Sheet 4 of 5)

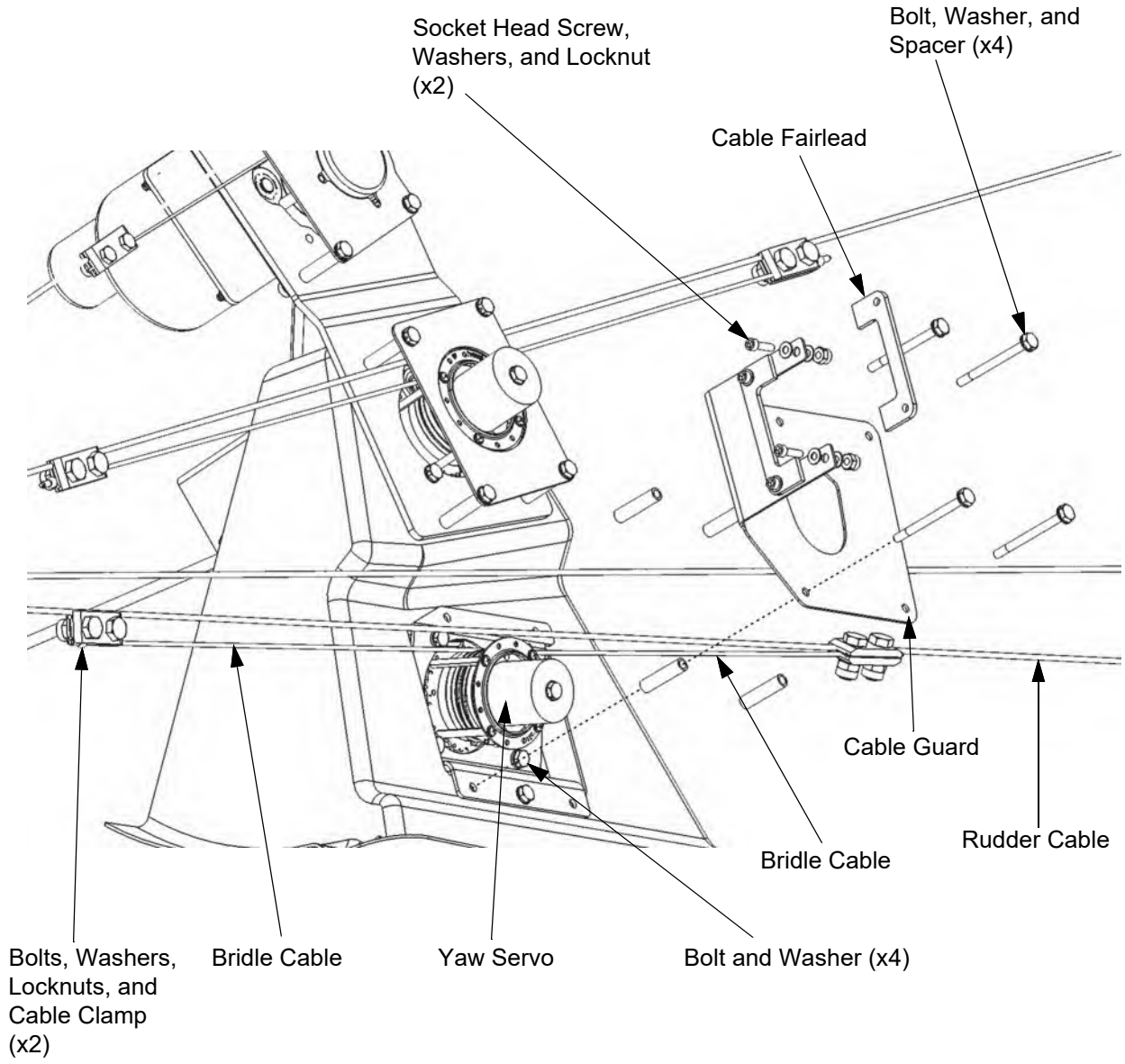

C

Figure 22-11.4: Autopilot and Pusher Servos (Sheet 5 of 5)

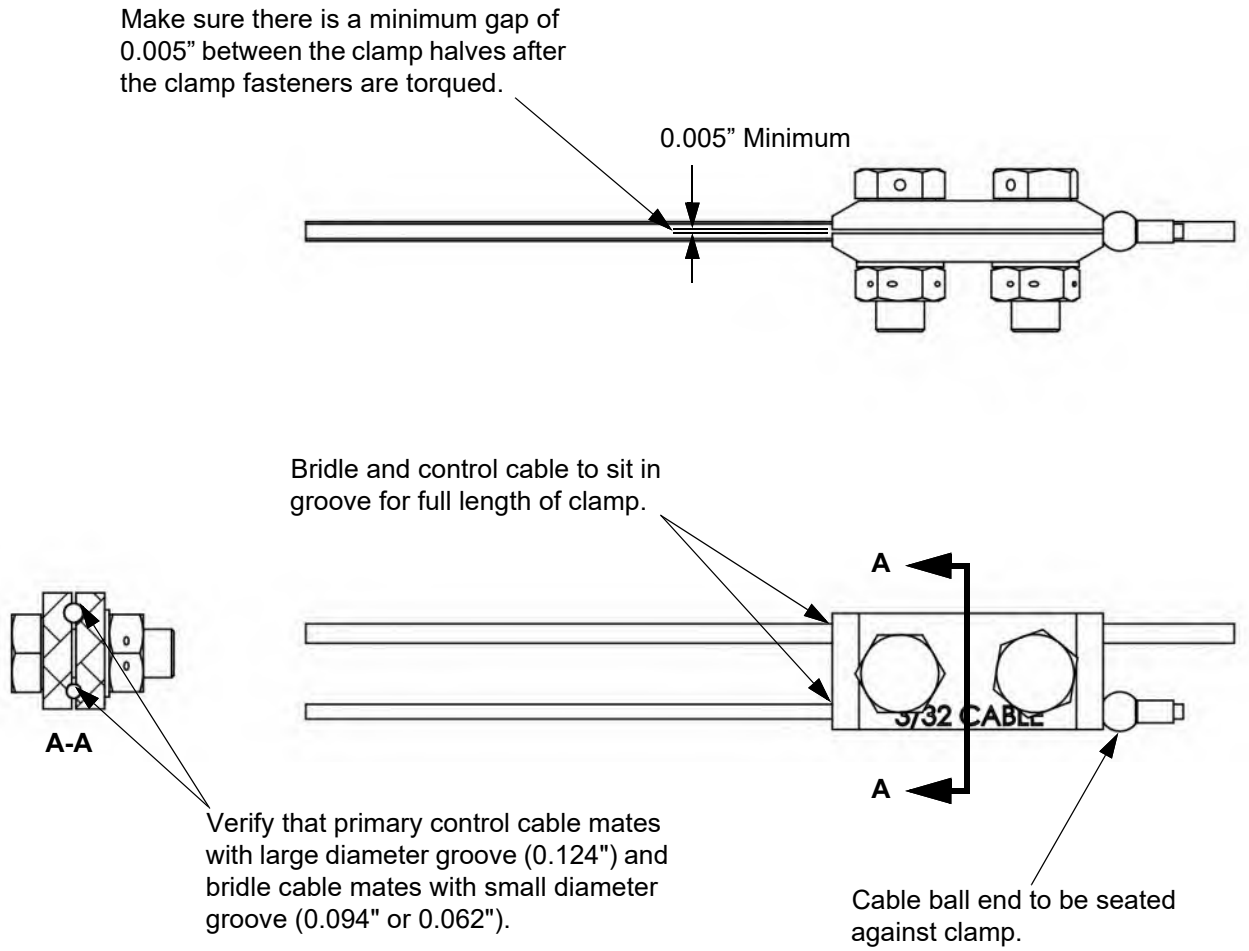

G. Bridle Cables

(1) Removal

(a) Remove the servo from the airplane.

(b) Remove the capstan cable guards and cover.

Note: Take note of the locations of the cable guards for re-installation. Location will differ between servos.

(c) Unwrap the cable(s) from around the capstan.

(d) Snap the cable center ball from the capstan (roll, pitch, and yaw servos).

(e) Loosen the center ball set screw (pusher servo only).

(f) Remove the bridle cable(s).

(2) Installation

(a) Depress the center ball to the bottom of the hole in the capstan.

(b) Make sure the ball is snapped into place (roll, pitch, and yaw servos).

(c) Tighten the set screw (pusher servo only).

(d) Wrap the bridle cable around the capstan.

Note: The bridle cables shall be wrapped and exit the capstan as defined by Table 22-11.1.

CAUTION: Make sure the cable guards are installed in their original positions to allow for correct clearances.

(e) Install the capstan cable guards and cover.

(f) Install the servo.

Table 22-11.1: Bridle Cables

Servo	Total Number of Wraps	Bridle Cable Exit Location
Roll	3	Bottom
Pitch Cable 1	1.5	Top
Pitch Cable 2	1.5	
Yaw Cable 1	1.5	Top
Yaw Cable 2	1.5	
Pusher	5	Top

(3) Servo Bridle Cable Tension Check

(a) Put the airplane in a climate controlled hangar.

Note: Let the temperature of the airplane stabilize for a minimum of 3 hours before doing any inspection, rigging, or adjustments.

(b) Remove the crew carpet (refer to Chapter 25-10).

(c) Remove access panel 3L (refer to Chapter 6).

(d) Position the rudder in the neutral position then install a rigging pin into the rudder limiter bracket.

(e) Remove the left and right wing tips (refer to Chapter 57-30).

(f) Install rigging pins into the left and right aileron bellcranks.

(g) Carefully secure the elevator in the neutral position at the outboard end of the horizontal stabilizer using wooden blocks and clamps to hold it in place.

(h) Remove the pressure bulkhead access panel (refer to Chapter 21-30).

(i) Use a tensiometer on the bridle cable to either side of the servo to ensure the bridle cable tension is 15 - 18 lbs.

(j) Remove the rigging pins from the left and right aileron bellcranks.

(k) Install the left and right wing tips (refer to Chapter 57-30).

(l) Remove the blocks and clamps securing the elevator.

(m) Remove the rigging pin from the rudder bellcrank bracket.

(n) Install the left and right wing tips (refer to Chapter 57-30).

(o) Install the pressure bulkhead access panel (refer to Chapter 21-30).

(p) Install access panel 3L (refer to Chapter 6).

(q) Install the crew carpet (refer to Chapter 25-10).

H. Autopilot Operational Checkout

Note: All servos must be accessed to perform this procedure. Refer to each servos removal/installation procedure for access instructions.

(1) Ensure the flight controls and bridle cables are correctly rigged and tensioned.

(2) Ensure there is a minimum of 0.25” between the bridle cable clamps and adjacent structures through the systems entire range of motion.

(3) Ensure cables do not rub on the fairleads during normal operation.

(4) Ensure there is a minimum ¼ turn of bridle cable engagement as measured from the end ball or center ball when the primary control system is at the maximum deflections.

(5) Ensure that each system operates freely and smoothly with no binding or restriction.

(6) Do the slip clutch override check procedure as follows:

(a) On the ground, with the autopilot off, check for freedom of control movement in all control axes which have a servo actuator connected, including trim.

(b) Power up PFD 1 in configuration mode (refer to the Garmin G1000 NXi Line Maintenance Manual, PN 190-02330-01, section 2.3.3):

(c) Navigate to the GIA 64X Page Group using the outer FMS knob. Navigate to the GFC Status page using the inner FMS knob.

(d) Engage one of the servo actuators. Select the “ENG CLC” soft key which turns on the internal engage clutch. Also select zero speed in the “DRIVE SERVO” area of the screen and select the “DRV SRVO” soft key. This ensures the servo actuator will hold zero speed through this check.

Note: This procedure will only work correctly if both are selected. False readings may be given otherwise. During the next two steps, the soft keys “DIS CLCH” and “STP SRVO” should be showing – don’t select them yet.

(e) Override the servo actuator slip clutch for the engaged axis by moving the appropriate control through its range of motion. The controls should move, with some resistance, through their range of motion.

Note: The values for servo torque, voltage, and speed change during this process.

(f) Ensure the servo motor does not turn by viewing the "SPEED" in the "SERVO DATA" area of the screen as you override the slip clutch.

Note: The motor of the servo actuator should remain stationary as the slip clutch slips. A +/- 0.1 RPM tolerance is allowable.

(g) Disengage the servo actuator by selecting "DIS CLCH" and "STP SRVO", and check for freedom of movement of controls. The resistance to movement from the autopilot actuator slip clutch should not be present.

(h) Repeat steps (d) through (g) for each primary flight control.

(i) Inspect each bridle cable clamp to ensure they have not moved.

I. Pusher Servo Clutch Override Check

(1) Check and note the pusher servo bridle cable tensions.

(2) Verify pusher clutch can be overridden from the yoke using the Stall Test switch:

(a) Connect external electrical power to the airplane (refer to Chapter 24-40).

(b) Set the BATT 1 and BATT 2 switches to ON.

(c) While holding the Stall Test switch, apply force to overcome the servo clutch. Apply force suddenly to achieve highest loading on cable clamps.

(d) Allow pusher to run unrestrained to the stop with the stall test switch to induce dynamic loading of the cable clamps as the pusher overcomes the servo clutch.

(3) Check the pusher servo bridle cable tensions and make sure they have not changed.

(4) Set BATT 1 and BATT 2 to off (refer to Chapter 24-40).

(5) Disconnect external power from the airplane.

J. Pusher Servo Clutch Adjustment

Note: If the pusher servo is not installed in the airplane put the servo in a holding fixture or soft jawed vise with the capstan side of the base plate up.

(1) Loosen or remove the bridle cables from the control cable.

(2) Remove the capstan cable guards from the pusher servo.

(3) Put the pusher servo assembly in the test fixture.

(4) Energize the pusher servo solenoid and motor and take an initial tension measurement.

Table 22-11.2: Pusher Servo Clutch Setting

Servo	Torque Setting (in-lbs)
Pusher	100 ± 5

(5) Remove the cotter pin from the end of the pusher servo shaft then remove the nut and shim washer(s).

(6) Install or replace tension washers to give the number and thickness shown in the following table.

Table 22-11.3: Pusher Servo Tension Washer

in-lbs	Exact Tension Washers		Suggested Shim Washers
	0.032 Quantity	0.040 Quantity	
76-100	2	2	0.010

(7) Reinstall the shim washer(s) and nut then tighten the nut to a starting position and temporarily install a cotter pin.

(8) Insert the pins on the 6622-1 tool with the 6621-1 tool into the index holes on the servo capstan then insert a torque wrench drive lug into the tool.

(9) Energize the servo solenoid and motor then read the output torque on the torque wrench.

(10) Tighten or loosen the nut to establish the specified torque. If the torque cannot be obtained with the nut castellations aligned for the cotter pin, remove or add shim washer(s) to change the nut height.

(11) Replace and secure the cotter pin.

(12) Install the bridle cable then install the cable guards and cover.

Figure 22-10.5: Pusher Servo Torque Setting

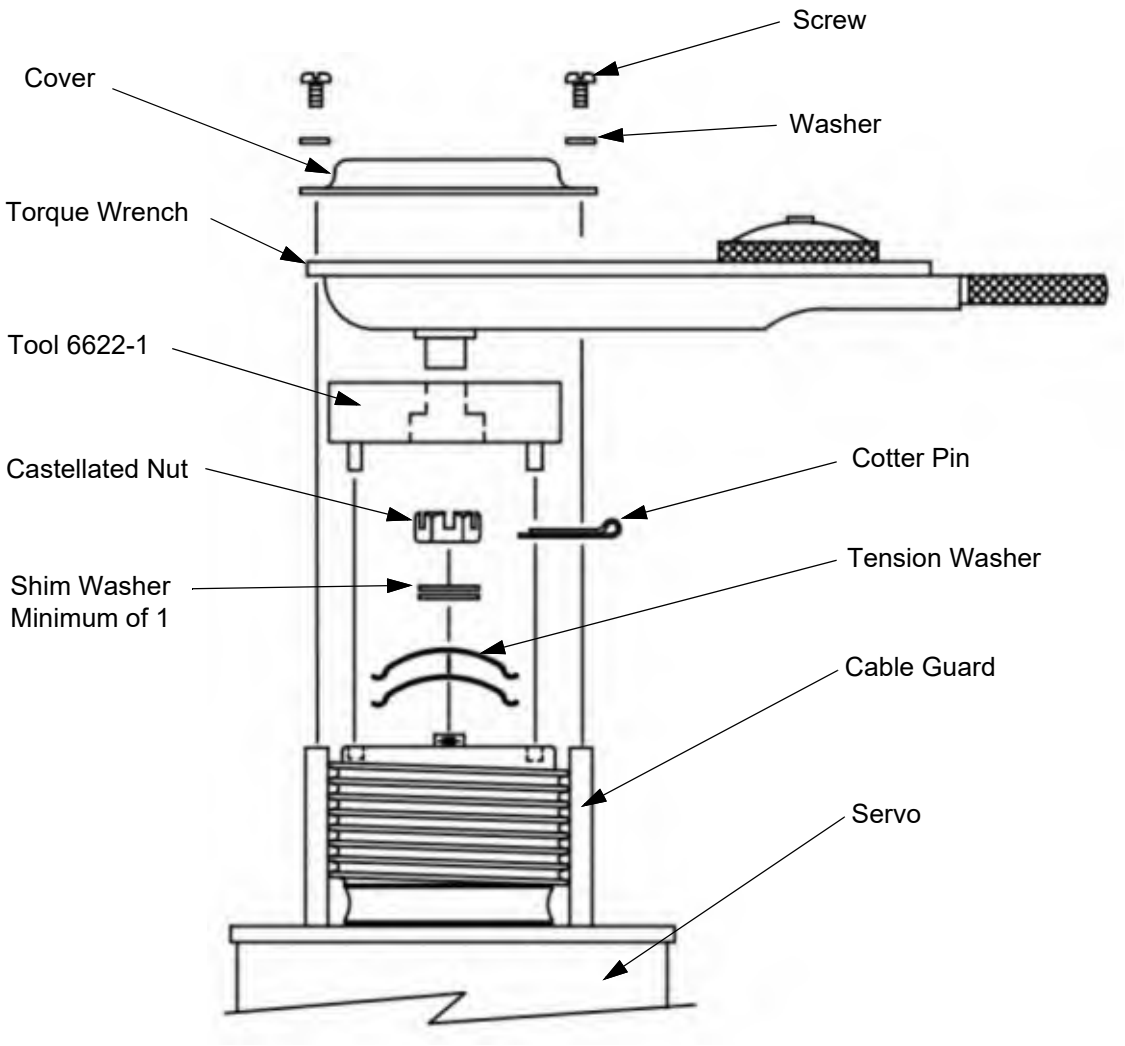

K. Pusher Servo Bridle Cable Tension Check

(1) Put the airplane in a climate controlled hangar.

(2) Make the airplane level (refer to Chapter 8-20).

(3) Let the temperature of the airplane stabilize for a minimum of 3 hours before doing any inspection, rigging, or adjustments.

(4) Carefully secure the elevator in the neutral position at the outboard end of the horizontal stabilizer using wooden blocks and clamps to hold it in place.

(5) Remove the pressure bulkhead access panel (refer to Chapter 21-30).

(6) Use a tensiometer on the bridle cable to either side of the servo to ensure the bridle cable tension is 15-18 lbs.

(7) Install the pressure bulkhead access panel (refer to Chapter 21-30).

L. Garmin GFC 700 Autopilot Functional Check

(1) Perform the following steps with the RUD TRIM, AIL TRIM, and ELEV TRIM circuit breakers in.

(2) With aircraft power on and the TRIM DISC CAS message not present on the PFDs, push in the AUTOPILOT circuit breaker in. The following should occur in sequence:

(a) PFD displays AFCS in a red box at the top of the display.

(b) PFD displays PFT in a white box at the top of the display.

(c) A normal Autopilot Disconnect tone (two high-low tones approximately two seconds in duration) is played.

(d) The PFT annunciation is removed from the PFD.

Note: If any other red message replaces the white PFT, the Pre-Flight Test has failed.

(3) Check Roll, Pitch and Yaw Servo's engagement as follows:

(a) Move yoke left and right to feel its freedom of movement about the roll axis.

(b) Move yoke forward and aft to feel its freedom of movement about the pitch axis.

(c) Actuate aircraft rudder pedals alternately in succession, to feel their freedom of movement about the yaw axis.

(d) Press the AP and YD keys on the GMC unit to engage roll attitude and pitch attitude modes, flight director, and yaw damper. Verify the AP and YD LEDs illuminate, the magenta FD bars appear on the PFD and the ROL, AP, YD and PIT annunciations appear on the GDU display.

(e) Move yoke left and right to feel its reduced freedom of movement about the roll axis. Reduced freedom indicates the Roll Servo is engaged.

(f) Move yoke forward and aft to feel its reduced freedom of movement about the pitch axis. Reduced freedom indicates the Pitch Servo is engaged.

(g) Actuate aircraft Rudder Pedals alternately in succession, to feel their reduced freedom of movement about the yaw axis. Reduced freedom indicates the Yaw Servo is engaged.

(4) Test Autopilot Disconnect functionality as follows:

(a) Push the AP/TRIM DISC switch on the pilots' yoke. Verify a normal autopilot disconnect tone (two high-low tones approximately two seconds in duration) is played. AP and YD indications on the PFD should blink in a yellow box and then extinguish. The active AP modes (ex. ROL and PIT) will stay displayed.

(b) Move yoke left and right to feel its freedom of movement about the roll axis.

(c) Move yoke forward and aft to feel its freedom of movement about the pitch axis.

(d) Actuate aircraft Rudder Pedals alternately in succession, to feel their freedom of movement about the yaw axis.

(e) Press the AP and YD keys on the GMC unit to engage roll attitude and pitch attitude modes, flight director, and yaw damper. Verify the AP and YD LEDs illuminate, the magenta FD bars appear on the PFD and the ROL, AP, YD and PIT annunciations appear on the GDU display.

(f) Push the AP/TRIM DISC switch on the copilots' yoke. Verify a normal Autopilot Disconnect tone (two high-low tones approximately two seconds in duration) is played, AP and YD indications on the PFD should blink in a yellow box and then extinguish. The active AP modes (ex. ROL and PIT) will stay displayed.

(g) Repeat steps (b) through (d).

(5) Test Autopilot HDG (Heading) roll functionality as follows:

(a) Press the AP and YD keys on the GMC unit to engage roll attitude and pitch attitude modes, flight director, and yaw damper. Verify the AP and YD LEDs illuminate, the magenta FD bars appear on the PFD and the ROL, AP, YD and PIT annunciations appear on the GDU display.

(b) Use any HDG knob to set the Heading Bug under the Lubber Line.

(c) Press the HDG key on the GMC unit, verify HDG annunciation replaces ROL on the PFD.

(d) Turn the Heading Bug to the left side of the Lubber Line. Verify the aircraft rolls in the direction of the HDG Bug by watching the yokes and aileron movement.

(e) Turn the Heading Bug to the right side of the Lubber Line. Verify the aircraft rolls in the direction of the HDG Bug by watching the yokes and aileron movement.

(6) Test Autopilot VS (Vertical Speed) functionality with the following steps:

(a) Press the VS key on the GMC unit to engage Vertical Speed Mode. Verify VS annunciation replaces PIT on the AP display, and the number 0 appears to indicate current vertical speed in FPM.

(b) Roll the scrollwheel on the GMC UP until a commanded vertical speed of 500FPM up. Verify the yoke moves aft.

(c) Roll the scrollwheel on the GMC DN until a commanded vertical speed of 500FPM down. Verify the yoke moves forward.

(d) Roll the scrollwheel on the GMC UP until the commanded vertical speed is 0 FPM.

(e) Rotate the BARO knob on the PFD to set the current barometric pressure / field elevation (example: 3,450 feet).

(f) Rotate the ALT SEL knob to select altitude 100 feet below the previously set PFD altitude (example: 3,350 feet)

(g) Slowly rotate the BARO knob on the PFD to match the altitude set in the previous step (example: 3,350). Verify the VS indication on the PFD changes to ALT.

(7) Test CWS (Control Wheel Steering) functionality as follows:

(a) Press and hold CWS switch on the pilot yoke to engage control wheel steering mode. Verify CWS annunciation appears on the PFD.

(b) With CWS switch still held, move yoke left and right to feel its freedom of movement about the roll axis.

(c) With CWS switch still held, move yoke forward and aft to feel its freedom of movement about the pitch axis.

(d) With CWS switch released, move yoke left and right to feel its reduced freedom of movement about the roll axis.

(e) With CWS switch released, move yoke forward and aft to sense its reduced freedom of movement about the pitch axis.

(f) Repeat steps (a) thru (e) with the CWS switch on the copilot yoke.

(8) Test the Yaw Damper functionality as follows:

(a) Verify the YD LED is illuminated and YD is displayed on the PFD.

(b) Push on the tail of the aircraft to rock the aircraft in the yaw axis, verify the rudder moves in the opposite direction as the nose.

(9) Test manual trim control authority as follows:

(a) Verify the Autopilot and Yaw Damper are engaged.

(b) Manually move the yaw trim left and right on the pilot yoke. Verify a normal Autopilot Disconnect tone (two high-low tones approximately two seconds in duration) is played, YD should blink in a yellow box on the PFD and then extinguish. Engage YD again and then repeat with the yaw trim on the copilot yoke.

(c) Manually move the pitch trim on the pilot's yoke. Verify a normal Autopilot Disconnect tone (two high-low tones approximately two seconds in duration) is played, AP should blink in a yellow box on the PFD and then extinguish. Engage AP again and then repeat with the pitch trim on the copilot yoke.

(10) Test Take Off mode as follows:

Note: This section must be done with the Terrain Off or prior to loading the Synthetic Vision Unlock Card.

(a) Verify the AP, YD and FD are not engaged.

(b) Press the Take Off / Go Around switch, verify the FD command bars appear on the PFD, while TO/TO annunciations appear on the PFD display. Verify the command bars pitches up to 12.5°.

(11) Test Manual Level Mode as follows:

(a) Verify the AP, YD and FD are engaged and ROL and PIT are displayed on the PFD.

(b) Set the heading bug to the aircraft heading.

(c) Press the HDG key on the GMC unit, verify ROL changes to HDG on the PFD.

(d) Adjust the heading bug to the left, verify the FD command bars start rolling left.

(e) Roll the scrollwheel on the GMC UP, verify the FD command bars start pitching up.

(f) Press the AUTO-LEVEL switch, verify that HDG and PIT are replaced with a green LVL and LVL and that the FD command bars show level pitch and roll attitudes.

(g) Disengage the AP, YD and FD.

(h) Press the AUTO-LEVEL switch, verify that the AP, YD and FD engage with the FD command bars at wings level and LVL / LVL displayed on the PFD.

This Page Intentionally Left Blank

E1000 AX GARMIN AUTOTHROTTLE

1. Description

(SN: K014, K086 and On)

A. AutoThrottle

The AutoThrottle system in integrated with the Garmin GFC 700 Auto Fight Control System (AFCS) and consists of the GSA 87 AutoThrottle servo and TLA sensor mounted in the throttle quadrant, the GMC 711 AFCS control head, and the AT DISC button on the power lever.

The AutoThrottle system is engaged by the AT button on the GMC 711 AFCS control head and controlled manually by the pilot through the GMC 711 control head or through programmed schedules in the Flight Management System (FMS). Power lever position is monitored by GIA 1 and GIA 2 through a Throttle Lever Angle (TLA) sensor mounted in the pedestal.

The AutoThrottle can be disengaged by the AT DISC button on the power lever, the AT button on the GMC 711, and can be manually overridden with force by the pilot through a clutch system in the GSA 87 servo. The AutoThrottle system is powered through the AUTOTHROTTLE circuit breaker on the right circuit breaker panel.

The GSA 87 AutoThrottle Servo is located below the throttle quadrant in the pedestal. It provides automatic control over engine power settings. The AutoThrottle servo consists of the servo, a capstan, and a slip clutch. The slip clutch allows the pilot to override the power lever setting. The servo receives data from the dual GIA 64 IACs and is powered by 28VDC through the AUTOTHROTTLE circuit breaker.

2. Troubleshooting

Refer to the current revision of the Garmin G1000 NXi Integrated Avionics System Line Maintenance Manual for the Epic E1000 AX, P/N 190-03244-00.

3. Maintenance Practices

(SN: K014, K086 and On)

A. AutoThrottle Servo

(1) Removal

(a) Remove the pedestal finish panel (refer to Chapter 25-10).

(b) Disconnect the servo electrical connector (2P871).

(c) Remove the cable guard from the idler pulley bracket.

(d) Remove the safety wire from the cable tensioner jam nut, and fully loosen the tensioner.

(e) Remove the screw that attaches the (forward) cable lock to the pulley and remove the cable lock.

(f) With the cable slack, lift the (aft) cable tensioner lock over the bolt, and remove the cable tensioner lock from the tensioner arm.

(g) Remove the cable end from the aft cable tensioner lock.

(h) Remove the safety wire then remove the (4x) screws and washers that attach the servo to the bracket, and remove the servo.

(2) Installation

(a) Put the servo in position on the bracket and install the (4x) screws and washers. Torque the screws to 20 - 25 in-lbs and install 0.032” safety wire.

(b) Route the aft portion of the cable around the pulley and put the swage in position in the cable tensioner lock. Put the cable tensioner lock in position over the bolt on the tensioner arm.

(c) Route the forward portion of the cable around the pulley. Put the cable swage in position in the cable lock.

(d) Install the cable lock on the pulley with the screw using Loctite 222. Torque the screw to 3.6 - 4.4 in-lbs.

(e) Tighten the tensioning bolt against the pulley to tension the cable to 13 +/-3 lbs.

(f) Torque the tensioning bolt jam nut to 20 - 25 in-lbs and install 0.032” safety wire.

(g) Install the cable guard on the idler pulley bracket. Torque the nut to 20 - 25 in-lbs.

(h) Connect the servo electrical connector (2P871).

(i) Do the AutoThrottle Adjustment (refer to Chapter 22-30.2.A[3]).

(j) Do the AutoThrottle Operational Check (refer to Chapter 22-30.2.C).

(k) Install the pedestal finish panel (refer to Chapter 25-10).

(3) Adjustment

(a) Connect external electrical power to the airplane (refer to Chapter 24-40).

(b) Set the BATT 1 and BATT 2 switches to ON.

(c) Put the aircraft in Configuration mode:

(i) Pull the PFD 1, PFD 2 and MFD circuit breakers.

(ii) Set the BATT 1 and BATT 2 switches to ON.

(iii) Press ENTER on the pilot's PFD while resetting the PFD 1 circuit breaker.
(iv) Press ENTER on the co-pilot's PFD while resetting the PFD 2 circuit breaker.
(v) Press ENTER on the MFD while resetting the MFD circuit breaker.
(vi) INITIALIZING SYSTEM message should be displayed on all three displays.

(d) Use the FMS knob to navigate to the GIA 64x tab, then to GIA Rigging.

(e) Depress "Default" softkey to reset rigging tables for selected GIZ. Then, press "Enter" to confirm prior to proceeding to subsequent GIA rigging."

(f) Under TLA GIA 1, ensure Rig Point 1 is highlighted and shows 0% below.

(g) Pull the throttle lever all the way back (aft) until it hits the gate, and continue holding it in this position.

(h) Press the "RIG" soft key, the sensor value should be captured in the table under "RIGGED".

(i) Use the FMS knob to switch RIG POINT 1 from 0% to 100%.

(j) Push the throttle lever all the way up (forward) until it hits the gate, and continue holding it there.

(k) Press the "RIG" soft key, the value should be captured in the rigging table.

(l) Press the "STORE" soft key and hit ENT when asked to confirm storing the values. Once complete, the table should display "RIGGED" in green.

(m) Repeat steps (f) thru (l) for TLA GIA 2

B. Throttle Lever Angle (TLA) Sensor

(1) Removal

(a) Remove the pedestal finish panel (refer to Chapter 25-10).

(b) Disconnect the TLA sensor electrical connector (P758).

(c) Remove the cotter pin and washer that attach the TLA sensor line to the power lever arm and disconnect the TLA sensor line from the pin.

(d) Remove the (3x) screws that attach the TLA sensor to the quadrant and remove the TLA sensor.

(2) Installation

(a) Put the TLA sensor in position and install the (3x) screws that attach the TLA sensor to the quadrant. Torque the screws to 7 - 9 in-lbs.

(b) Connect the TLA sensor line to the pin on the power lever arm and install the washer and cotter pin.

(c) Connect the TLA sensor electrical connector (P758).

(d) Do the AutoThrottle Adjustment (refer to Chapter 22-30.2.A[3]).

(e) Do the AutoThrottle Operational Check (refer to Chapter 22-30.2.C).

(f) Install the pedestal finish panel (refer to Chapter 25-10).

C. AutoThrottle Operational Check

(1) Ensure the AUTOTHROTTLE circuit breaker is in.

(2) Put the aircraft in Configuration mode:

(a) Pull the PFD 1, PFD 2 and MFD circuit breakers.

(b) Set the BATT 1 and BATT 2 switches to ON.

(c) Press ENTER on the pilot's PFD while resetting the PFD 1 circuit breaker.

(d) Press ENTER on the co-pilot's PFD while resetting the PFD 2 circuit breaker.

(e) Press ENTER on the MFD while resetting the MFD circuit breaker.

(f) INITIALIZING SYSTEM message should be displayed on all three displays.

(3) Use the FMS knob on the PFD to navigate to the GFC Status Page.

(4) Where it says "Select Servo Axis", select "EXTENDED SERVO 1".

(5) Verify the PFT displays "PASSED".

(6) Press the AT disconnect switch and verify the AP DISCONNECT box toggles from green to red when actuating switch.

(7) Use the FMS knob to navigate to the Analog In Configuration page.

(8) Find the channel "ANALOG 8 DC IN 1" and verify that the "Data" and "Rigged" boxes are green.

(9) Actuate the throttle lever and verify the value changes with the movement.

Figure 22-30.1: AutoThrottle Servo (Sheet 1 of 3)

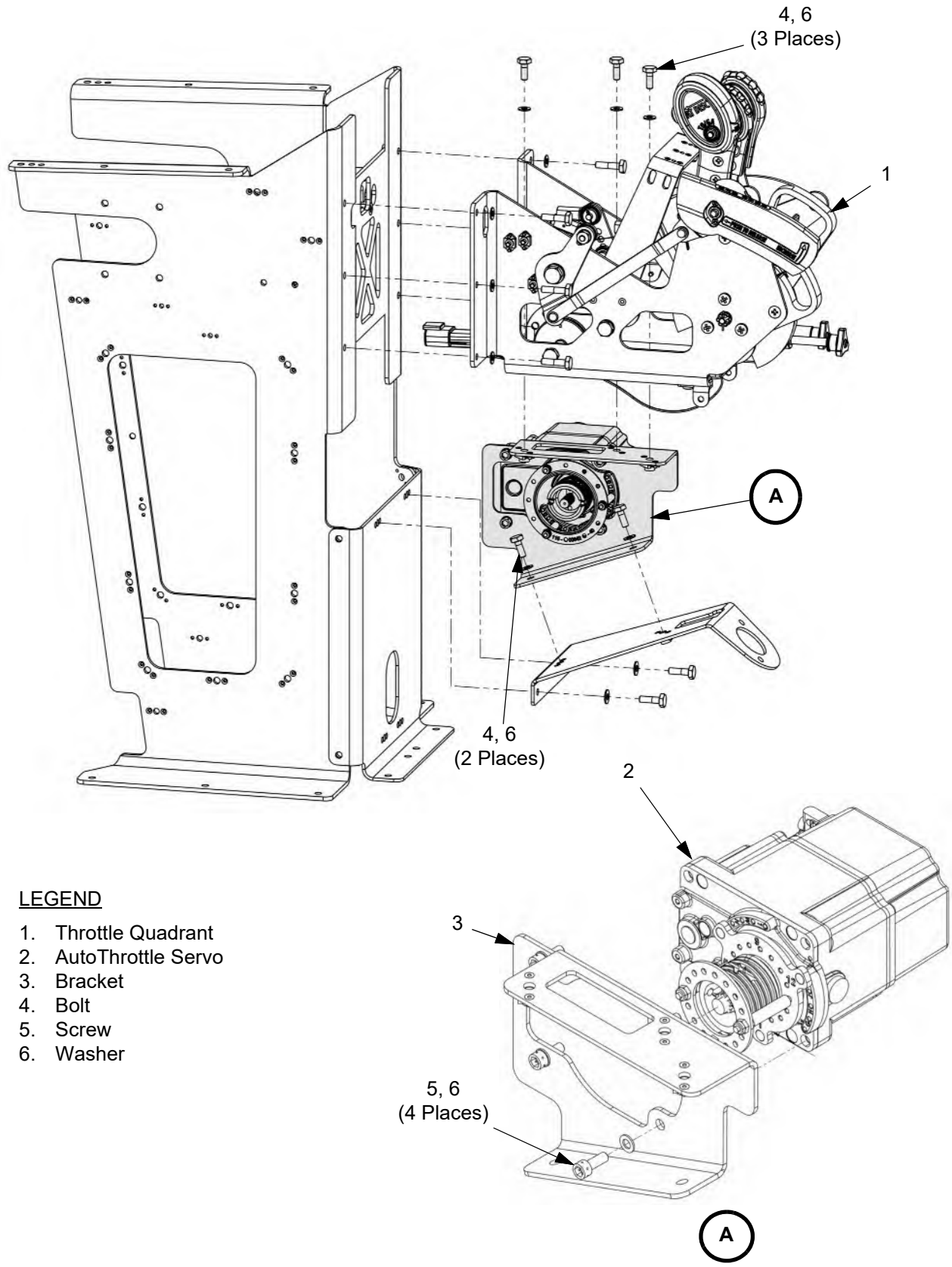

LEGEND

1. Throttle Quadrant
2. AutoThrottle Servo
3. Bracket
4. Bolt
5. Screw
6. Washer

Figure 22-30.1: AutoThrottle Servo (Sheet 2 of 3)

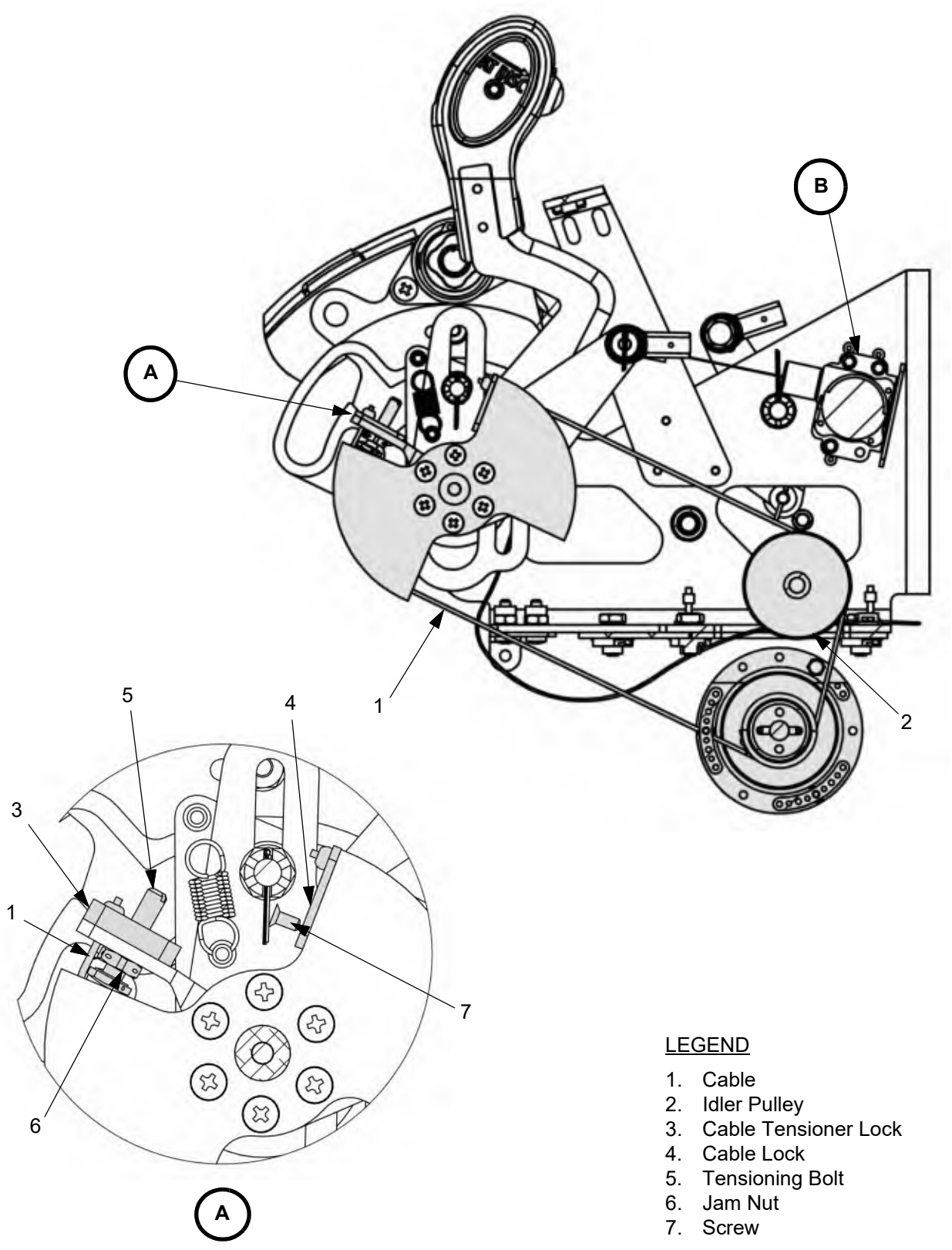

LEGEND

1. Cable
2. Idler Pulley
3. Cable Tensioner Lock
4. Cable Lock
5. Tensioning Bolt
6. Jam Nut
7. Screw

Figure 22-30.1: AutoThrottle Servo (Sheet 3 of 3)

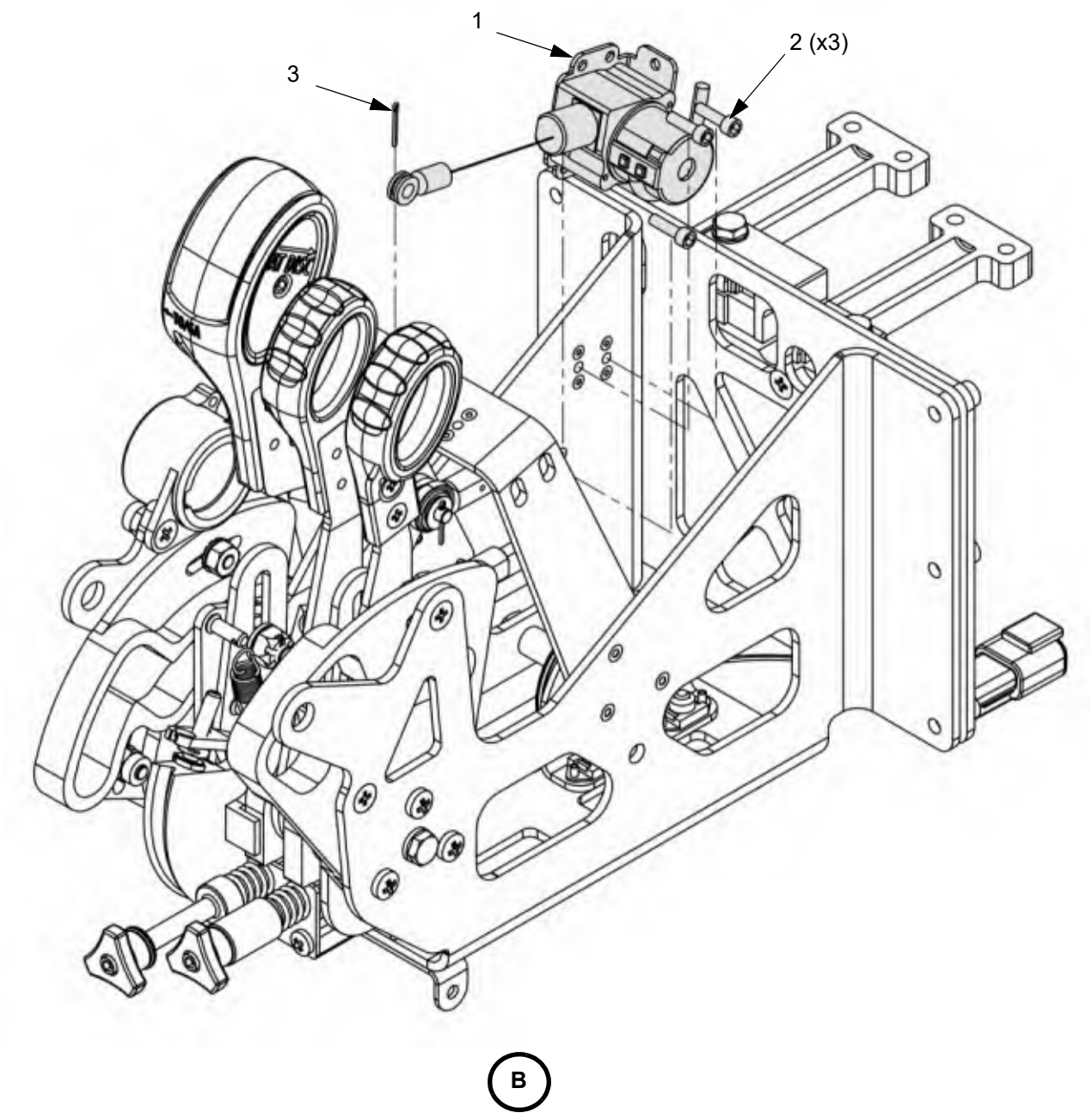

LEGEND

1. TLA Sensor
2. Screw
3. Cotter Pin

D. Bridle Cable

(1) Removal

(a) Remove the servo, refer to Chapter 22-30.2.A.

(b) Remove the (3x) nuts that attach the cover to the stand-offs and remove the cover.

(c) Remove the (3x) stand-offs from the servo.

(d) Unwrap the cable and unsnap the swaged ball from the capstan, and remove the bridle cable.

(2) Installation

(a) Snap the swaged ball to the bottom of the hole in the capstan. Make sure the ball securely snaps in place.

(b) Wrap the cable around the capstan. the outside half of the cable wraps .5 times and exits opposite of ball. The inside half of the cable wraps 1.75 times and exits up from the capstan. See Figure 22-30.2 for proper orientation.

Note: The swaged ball is not centered on the cable. Make sure the longer section of cable routes up and over the idler pulley.

(c) Install the (3x) stand-offs at positions 1, 5 and 13 on the servo, then torque the stand-offs to 6-8 in-lbs.

(d) Put the cover in position on the stand-offs and install the (3x) nuts. Torque the nuts to 6-8 in-lbs.

(e) Install the servo, refer to Chapter 22-30.2.A.

Figure 22-30.2: Bridle Cables

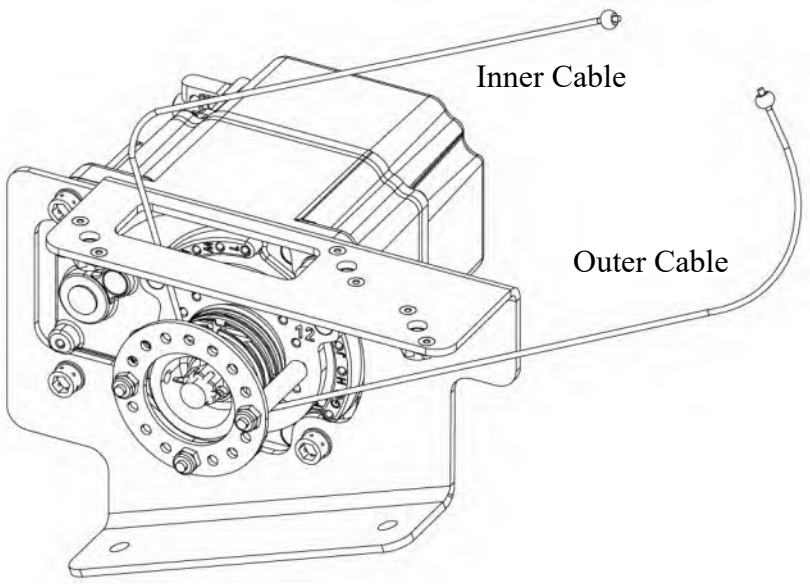

CHAPTER 23

Communications

This Page Intentionally Left Blank

List of Effective Pages

Chapter/Section	Page Number	Effective Date
23-Title	Page 1	02 Jan 2020
23-Title	Page 2	02 Jan 2020
23-LOEP	Page 1	08 Sep 2026
23-LOEP	Page 2	02 Jan 2020
23-TOC	Page 1	13 Jul 2022
23-TOC	Page 2	02 Jan 2020
23-00	Page 1	10 Jul 2025
23-00	Page 2	10 Jul 2025
23-10	Page 1	14 Jul 2021
23-10	Page 2	02 Jan 2020
23-30	Page 1	13 Jul 2022
23-30	Page 2	08 Sep 2026
23-30	Page 3	13 Jul 2022
23-30	Page 4	13 Jul 2022
23-30	Page 5	13 Jul 2022
23-30	Page 6	19 Jan 2023
23-30	Page 7	19 Jan 2023
23-30	Page 8	19 Jan 2023
23-30	Page 9	10 Jul 2025
23-30	Page 10	10 Jul 2025
23-30	Page 11	10 Jul 2025
23-30	Page 12	10 Jul 2025
23-30	Page 13	10 Jul 2025
23-30	Page 14	10 Jul 2025
23-30	Page 15	10 Jul 2025
23-30	Page 16	10 Jul 2025
23-30	Page 17	10 Jul 2025
23-30	Page 18	10 Jul 2025
23-30	Page 19	10 Jul 2025
23-30	Page 20	10 Jul 2025
23-50	Page 1	14 Jul 2021
23-50	Page 2	08 Sep 2026
23-50	Page 3	02 Jan 2020
23-50	Page 4	02 Jan 2020
23-60	Page 1	02 Jan 2020
23-60	Page 2	13 Jul 2022
23-60	Page 3	13 Jul 2022

23-60 ..... Page 4 ..... 02 Jan 2020
23-60 ..... Page 5 ..... 02 Jan 2020
23-60 ..... Page 6 ..... 02 Jan 2020
23-60 ..... Page 7 ..... 02 Jan 2020
23-60 ..... Page 8 ..... 02 Jan 2020

23-70 ..... Page 1 ..... 10 Jul 2025
23-70 ..... Page 2 ..... 10 Jul 2025
23-70 ..... Page 3 ..... 10 Jul 2025
23-70 ..... Page 4 ..... 10 Jul 2025

Table of Contents

List of Effective Pages ..... 23-LOEP / Page 1
Table of Contents ..... 23-TOC / Page1

Paragraph **Page Number**

Communications
1. General ..... 23-00 / Page 1
2. Troubleshooting ..... 23-00 / Page 1

Speech Communications
1. Description ..... 23-10 / Page 1
2. Maintenance Practices ..... 23-10 / Page 1
   A. COM and Transponder Antenna (Comant CI 1085-20-L) ..... 23-10 / Page 1

Passenger Address and Entertainment
1. Description ..... 23-30 / Page 1
2. Maintenance Practices ..... 23-30 / Page 1
   A. Garmin GDL 69A XM Satellite Weather/Music Data Link ..... 23-30 / Page 1
   B. Garmin GSR 56 Satellite Transceiver ..... 23-30 / Page 4
   C. GSR 56 Satellite Transceiver Remote Rack ..... 23-30 / Page 4
   D. GSR 56 Operational Check ..... 23-30 / Page 5
   E. GSR 56 Volume Adjustment ..... 23-30 / Page 6
   F. Garmin GDL 60 Datalink (SN: K014, K086 and On) ..... 23-30 / Page 10
   G. Garmin GA-61 Antenna (SN: K014, K086 and On) ..... 23-30 / Page 14
   H. Starlink ..... 23-30 / Page 16

Audio Integrating
1. Description ..... 23-50 / Page 1
2. Maintenance Practices ..... 23-50 / Page 1
   A. GMA 350 Audio Panel ..... 23-50 / Page 1

Static Discharging
1. Description ..... 23-60 / Page 1
2. Maintenance Practices ..... 23-60 / Page 1
   A. Static Wick ..... 23-60 / Page 1
   B. Static Wick Base ..... 23-60 / Page 2

Cybersecurity

1. Description ..... 23-70 / Page 1
2. Electronic Devices ..... 23-70 / Page 1
3. Field-Loadable Data ..... 23-70 / Page 1
4. Security Event Logging ..... 23-70 / Page 1
   A. Security Event Log Review (K014, K086 and On) ..... 23-70 / Page 1
   B. Maintenance Practices ..... 23-70 / Page 3

COMMUNICATIONS

1. General

This chapter gives descriptions and maintenance procedures for communication systems used between crew and passengers, between the crew and other aircraft, and between the crew and ground stations. This chapter also includes description and maintenance of the systems that provide lightning protection and discharge of static electricity accumulation.

Refer to the current revision of the Garmin G1000 NXi Integrated Avionics System Line Maintenance Manual for the Epic E1000, P/N 190-02330-01 for component and system descriptions.

K003-K085 (excluding K014), refer to the current revision of the E1000 Wiring Manual, P/N SK05000002.

K014, K086 and on, refer to the current revision of the E1000 Wiring Manual, P/N SK05003002.

2. Troubleshooting

Troubleshoot the Garmin GMA 350 as specified in the current revision of the Garmin G1000 NXi Integrated Avionics System Line Maintenance Manual for the Epic E1000, P/N 190-02330-01.

Troubleshoot the Garmin GDL 60 Datalink, GWX Weather Radar, and GRA 5500 Radar Altimeter as specified in the current revision of the Garmin G1000 NXi Integrated Avionics System Line Maintenance Manual for the Epic E1000 AX, P/N 190-03244-00.

This Page Intentionally Left Blank

SPEECH COMMUNICATIONS

1. Description

Speech communication is controlled using the Garmin GMA 350 Audio Panel which is a digital audio panel with integrated marker beacon receiver. Refer to Chapter 23-50 for a full description and removal/installation procedures for the GMA 350.

2. Maintenance Practices

A. COM and Transponder Antenna (Comant CI 1085-20-L)

(1) Removal

(a) Remove the carpet (refer to Chapter 25-20) and flooring (refer to Chapter 53-20) in the passenger compartment.

(b) Disconnect the antenna cables from the antenna.

(c) Remove the nuts, washers, and screws attaching the antenna to the fuselage.

(d) Remove the antenna and gasket from the bottom of the fuselage.

(e) Remove any remaining sealant from the fuselage.

(2) Installation

(a) Use Scotch-Brite™ to remove any aluminum oxide from the base of the antenna.

(b) Clean the contact area on the fuselage and the antenna using isopropyl alcohol then let it to dry.

(c) Align and position the gasket and antenna on the bottom of the fuselage.

(d) Insert the attachment screws through the mounting holes in the antenna.

(e) Install the washers and nuts attaching the antenna to the fuselage. Torque the nuts 12 to 15 in.-lbs.

(f) Fillet a bead of white Dow Corning 748 sealant, or equivalent, around the perimeter of the antenna.

(g) Connect the antenna cable.

(h) Verify continuity between the antenna base/antenna cable mounting connector and the nearest ground strap for a maximum of 1 ohm resistance.

(i) Install passenger compartment flooring (refer to Chapter 53-20) and carpet (refer to Chapter 25-20).

(3) Protective Tape Installation

(a) Remove the old protective tape and thoroughly clean the antenna with isopropyl alcohol.

(b) Trim the new 3M 8681 tape as shown in figure 23-10.1.

(c) Install the tape using a plastic squeegee.

Note: The tape may be installed dry or using 3M™ Protective Tape Application Solution.

Figure 23-10.1: COM and Transponder Antennas

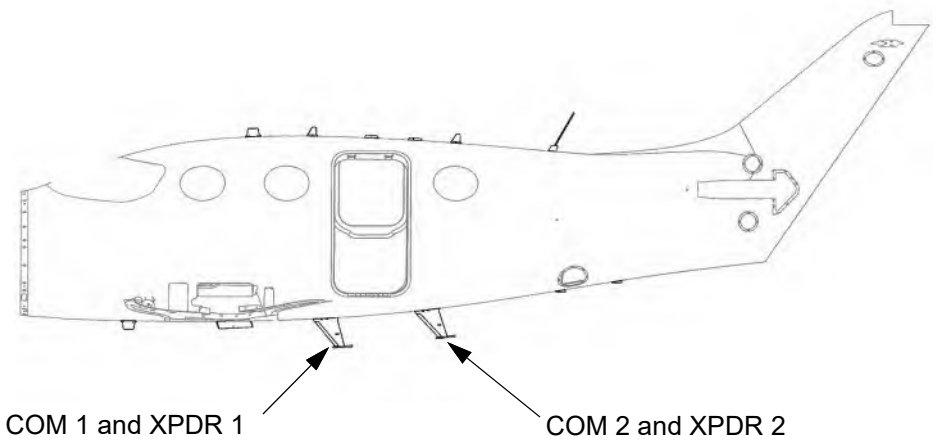

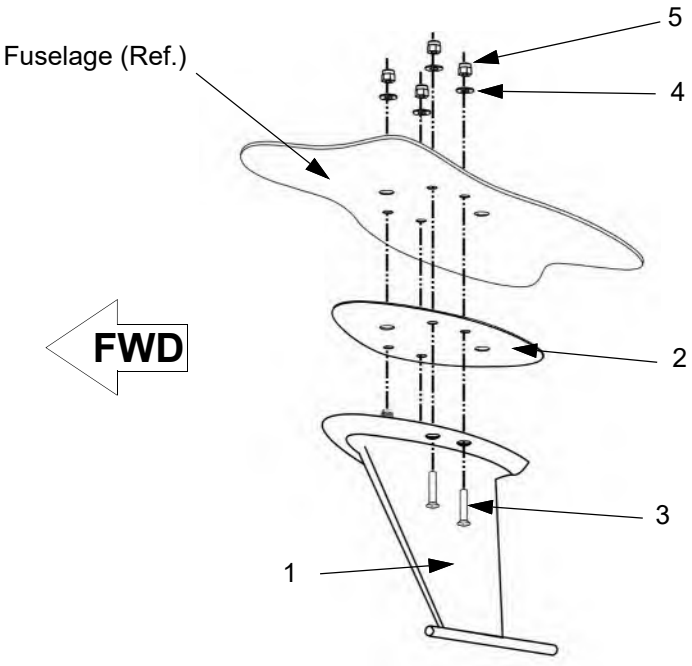

LEGEND

1. CI 1085-20-L COM and Transponder Antenna
2. Conductive Gasket
3. Screw
4. Washer
5. Nut

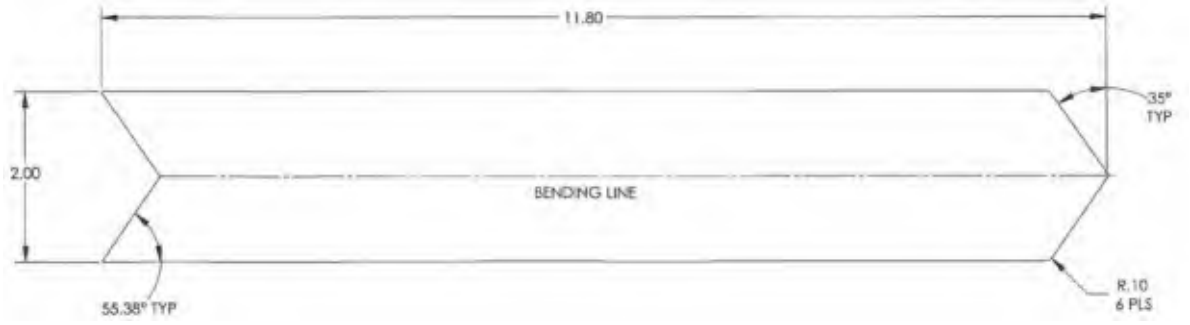

Protective Tape Dimensions

PASSENGER ADDRESS AND ENTERTAINMENT

1. Description

Refer to the current revision of the Garmin G1000 NXi Integrated Avionics System Line Maintenance Manual for the Epic E1000, P/N 190-02330-01. This document provides interface, introductory, description, and basic control and operation information for the integrated avionics system installed on this airplane.

K003-K085 (excluding K014), refer to the current revision of the E1000 Wiring Manual, P/N SK05000002.

K014, K086 and on, refer to the current revision of the E1000 Wiring Manual, P/N SK05003002.

2. Maintenance Practices

A. Garmin GDL 69A XM Satellite Weather/Music Data Link

(1) Removal

(a) Remove the MFD (refer to Chapter 34-40).

(b) Loosen the Phillips screw that secures the handle of the GDL 69A mounting lever.

(c) Pull the handle outward to unlock the GDL 69A then gently remove the unit from the rack.

(2) Installation

(a) Inspect the connectors to ensure there are no bent or damaged pins. Repair any damage.

(b) Gently insert the GDL 69A into its rack. Ensure the locking stud on the lever will engage in the channel on the rack. The unit can only be installed in one direction.

CAUTION: Do not use excessive force when inserting the GDL 69A into the rack. This may cause damage to the connectors, unit and/or unit rack. If excessive resistance is felt during installation, stop! Remove the GDL 69A and identify the source of resistance. The rear plates are designed to float in the unit rack. Check to ensure the rear plates are not bound by the connectors or spring clip.

(c) Push the GDL 69A lever inwards towards the unit. This engages the locking stud with the dogleg slot and locks the unit into the rack. If there is excessive resistance, do not force the unit.

(d) Lock the handle into the GDL 69A body then tighten the Phillips screw.

(e) Install the MFD (refer to Chapter 34-40).

(f) Load software, configure, and test the GDL 69A (refer to Section 6 of the current revision of the Garmin GDL 69/69A Installation Manual, P/N 190-00355-02 and Garmin G1000 NXi Integrated Avionics System Line Maintenance Manual for the Epic E1000, P/N 190-02330-01).

(3) Continued Airworthiness

Refer to Chapter 8.5.3.1.1 of the current revision of the Garmin G1000 NXi Integrated Avionics System Line Maintenance Manual for the Epic E1000, P/N 190-02330-01.

(4) Configuration Check

(a) Place the Garmin G1000 NXi system into Configuration Mode.

To enter Configuration Mode, pull the circuit breaker for all 3 displays (PFD 1, PFD 2, and MFD). While holding the ENT key on each display restore power by closing the circuit breaker. When the words INITIALIZING SYSTEM appear release the ENT key.

(b) Use the FMS knob to select the GDL 69 Configuration page.

(c) Verify that the cable loss of 6.3 dB has been entered in the CABLE LOSS INCLUDING INLINE ATTENUATORS IF USED (NOMINAL DB) field and GA 37 has been entered in the SELECT GDL ANTENNA field. If not, proceed to the next step.

(d) Push softkeys 12, 9, 6 and 3 in order to unlock the GDL Configuration Page.

(e) Using the FMS knob go to the SELECT GDL ANTENNA field and select GA 37 followed by the ENT key.

(f) Using the FMS knob go to the CABLE LOSS INCLUDING INLINE ATTENUATORS IF USED (NOMINAL DB) field then enter 6.3 followed by the ENT key.

Figure 23-30.1: GDL 69A XM Satellite Weather/Music Data Link

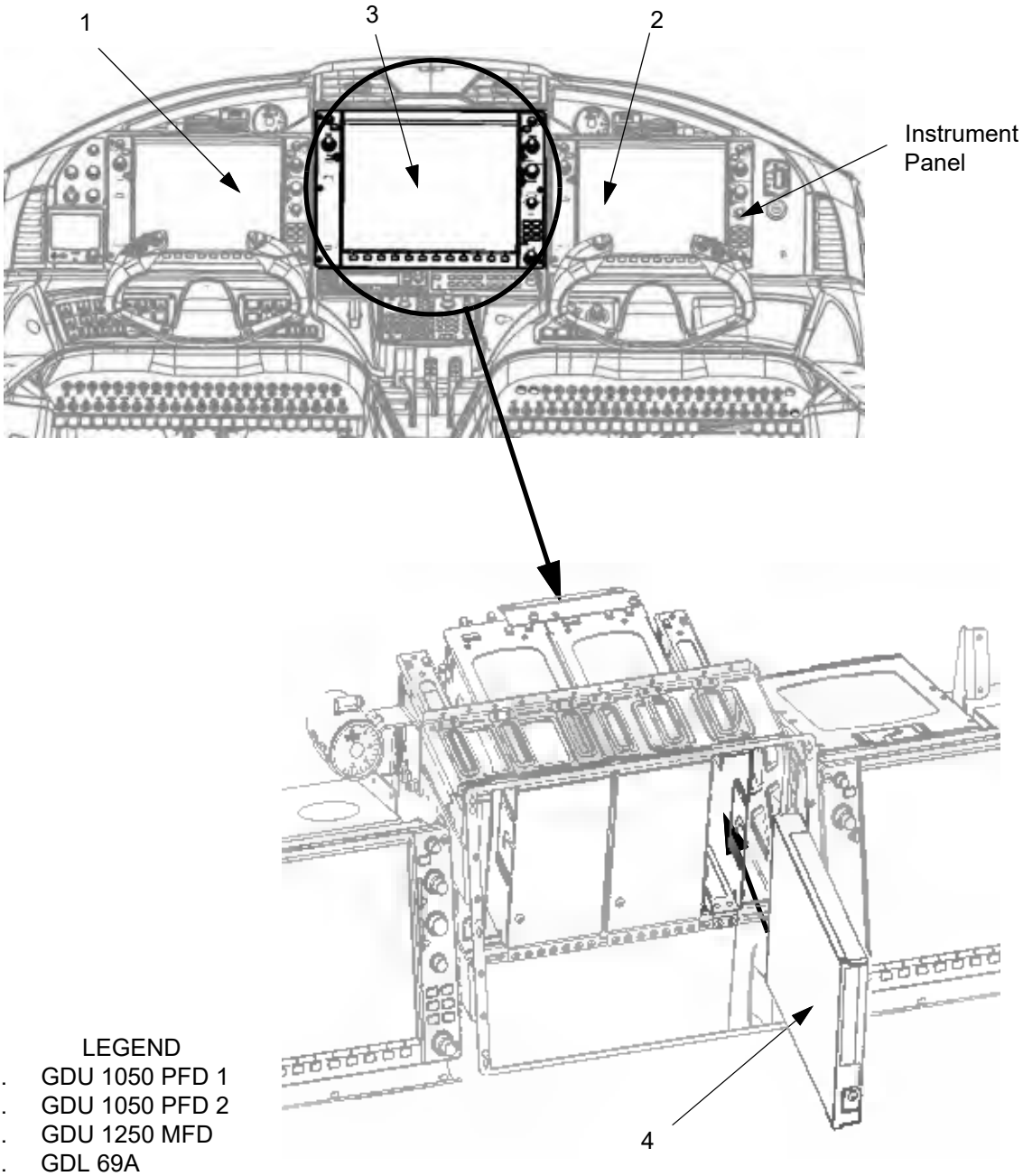

LEGEND
1. GDU 1050 PFD 1
2. GDU 1050 PFD 2
3. GDU 1250 MFD
4. GDL 69A

B. Garmin GSR 56 Satellite Transceiver

Note: Refer to Chapter 34-40 for the GPS/Iridium dual channel antenna maintenance practices.

(1) Removal

(a) Set BATT 1 and BATT 2 switches to off.

(b) Disconnect external electrical power from the airplane (refer to Chapter 24-40).

(c) Pull and collar the SAT TEL circuit breaker.

(d) Remove the flight compartment carpet (refer to Chapter 25-10) and access 3RC (refer to Chapter 6-00 and 53-20).

(e) Loosen the ratcheting latch on the GSR 56 mounting rack.

(f) Remove the GSR 56 transceiver.

(2) Installation

(a) Put the GSR 56 transceiver in position in the rack.

(b) Tighten the ratcheting latch.

(c) Install access panel 3RC (refer to Chapter 6-00 and 53-20) and flight compartment carpet (refer to Chapter 25-10).

(d) Reset the SAT TEL circuit breaker.

(e) Do the Operational Check of the GSR 56.

C. GSR 56 Satellite Transceiver Remote Rack

(1) Removal

(a) Remove the GSR 56 transceiver (refer to 23-30.B.1).

(b) Disconnect the electrical connector from the remote rack.

(c) Disconnect the coax connector from the remote rack.

(d) Remove the screws and washers that attach the remote rack to the mounting bracket.

(e) Remove the remote rack.

(f) Remove the screws, washers and nuts that attach the mounting plate to the remote rack.

(g) Remove the mounting plate from the remote rack.

(h) Remove the screws, washers and nuts that attach the mounting bracket to structure.

(i) Remove the mounting bracket.

(2) Installation

(a) Put the mounting bracket in position.

(b) Install the screws, washers and nuts that attach the mounting bracket to structure.

(c) Put the mounting plate on the remote rack.

(d) Install the screws, washers and nuts that attach the mounting plate to the remote rack.

(e) Put the remote rack in position.

(f) Install the screws and washers that attach the remote rack to the mounting bracket.

(g) Connect the electrical and coax connectors to the remote rack.

(h) Install the GSR 56 transceiver (refer to 23-30.B.2).

D. GSR 56 Operational Check

(1) Connect external electrical power to the airplane (refer to Chapter 24-40).

(2) Set the BATT 1 and BATT 2 switches to ON.

(3) Make sure the GSR 1 FAIL CAS message does not appear.

(4) Make sure phone calls can be made and received and call quality is clear and understandable on both ends of the call. Refer to the latest revision of the Garmin G1000 NXi Pilot's Guide for the Epic E1000, PN 190-02289-01.

(5) Set the BATT 1 and BATT 2 switches to off.

(6) Disconnect external electrical power from the airplane (refer to Chapter 24-40).

E. GSR 56 Volume Adjustment

The following procedure is provided if volume adjustments are needed to improve call quality in flight. If the GSR 56 Satellite Transceiver is replaced and set to baseline configuration, this procedure can be used to adjust the phone volume settings.

(1) Connect external electrical power to the airplane (refer to Chapter 24-40).
(2) Put the aircraft in Configuration mode:
    (a) Pull the PFD 1 circuit breaker.
    (b) Set the BATT 1 and BATT 2 switches to ON.
    (c) Press ENTER on the pilot's PFD while resetting the PFD 1 circuit breaker.
    (d) INITIALIZING SYSTEM message should be displayed on the PFD.
(3) Use the outer FMS knob to select GMA.
(4) Use the inner FMS knob to select GMA Volume Configuration and press the ENT softkey.
(5) Use the inner FMS knob to scroll to the "Minimum" window.
(6) Press the ENT softkey and use the inner FMS knob to select "Maximum".
    (a) To increase/decrease the maximum call volume, adjust the value in "Inputs" row 11, in the ALL "Outputs" column, refer to Figure 23-30.2. Check the volume level with each adjustment.

    Note: A 6db. change is approximately a 10% volume increase/decrease.

    (b) If call quality is not improved by, or is made worse by adjusting the volume, the gain can be adjusted. Contact Epic Aircraft prior to making this adjustment for correct input values.
        (i) To increase/decrease call input (gain), adjust the value in "Outputs" column 8, in the ALL "Inputs" row. Check the volume level with each adjustment.
(7) After completing the adjustment, press the softkey below Set>ACT.
(8) Confirm the configuration by doing the following:
    (a) Select the Configuration Manager page on PFD1 using the outer FMS knob.
    (b) Press the CNFM CFG softkey at the bottom of the display.
    (c) The prompt Confirm configuration as expected configuration appears with OK selected. Press ENT to confirm the configuration.
(9) Verify the configuration updated as follows:
    (a) Pull the PFD 1 circuit breaker.
    (b) Wait for PFD 1 to completely power down, then reset the PFD 1 circuit breaker.
    (c) Make sure the "Config Error" message does not appear on PFD 1.
(10) Set the BATT 1 and BATT 2 switches to off.
(11) Disconnect external electrical power from the airplane (refer to Chapter 24-40).

Figure 23-30.2: GSR 56 Volume Adjustment

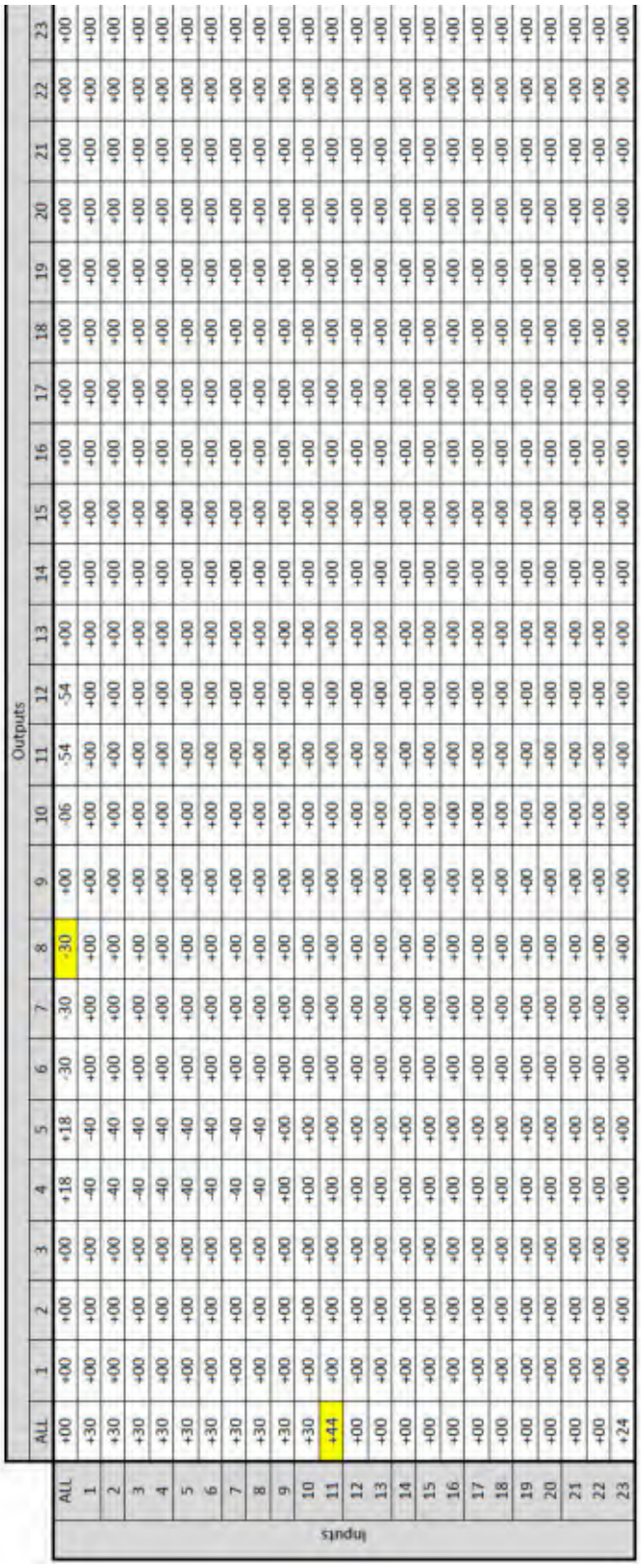

Figure 23-30.3: GSR 56 Satellite Transceiver (Sheet 1 of 2)

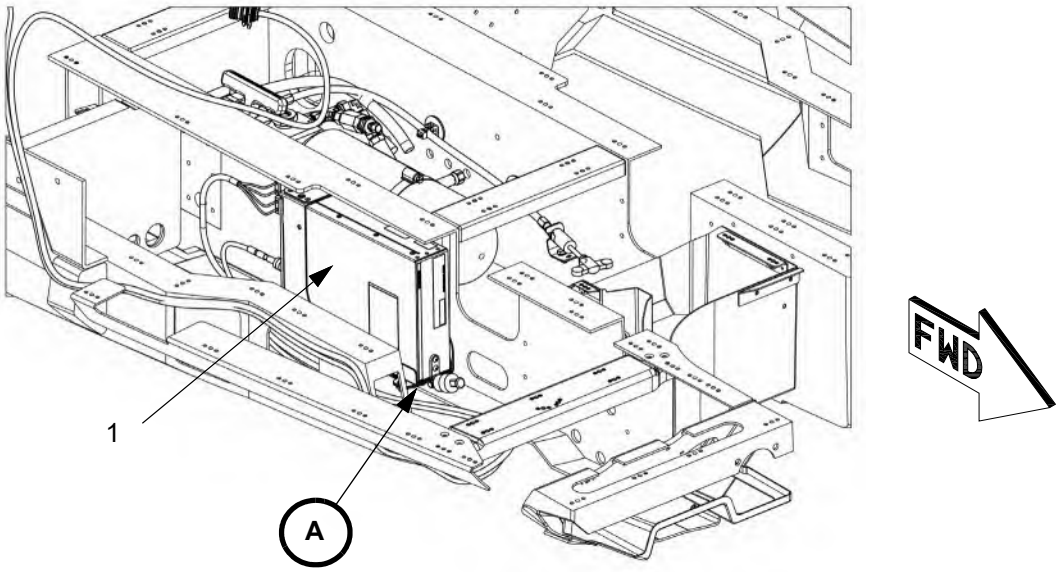

LEGEND

1. Garmin GSR 56 Transceiver
2. Mounting Bracket Assembly
3. Screw
4. Washer
5. Nut

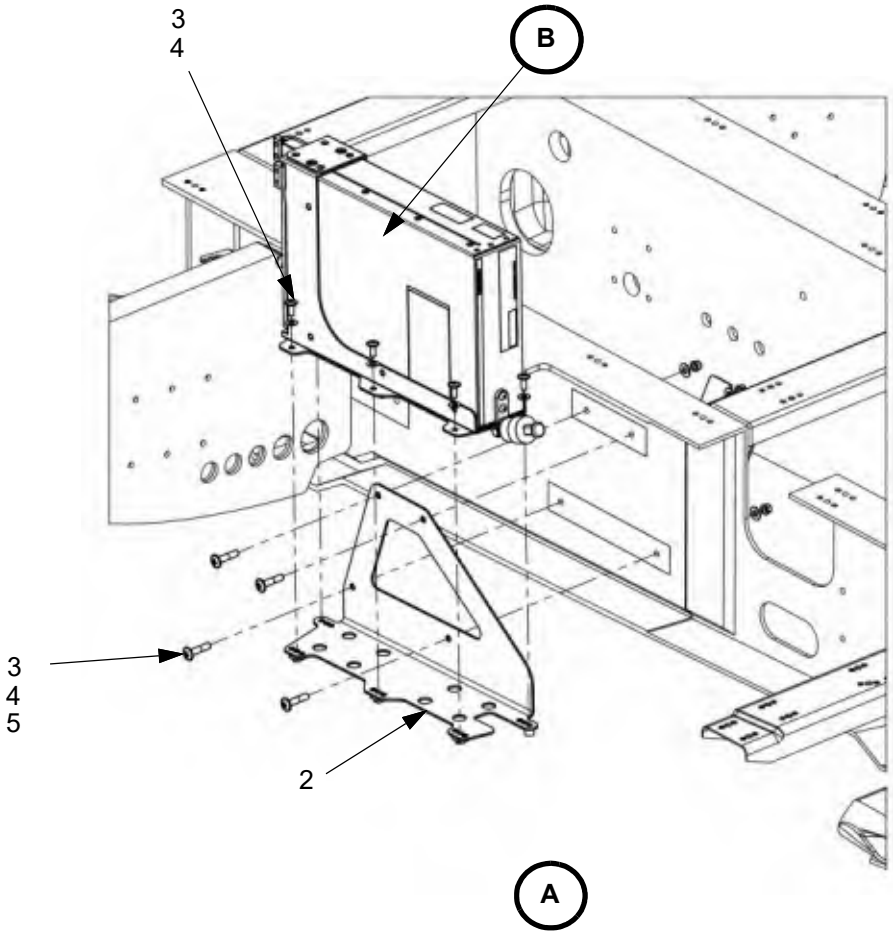

Figure 23-30.3: GSR 56 Satellite Transceiver (Sheet 2 of 2)

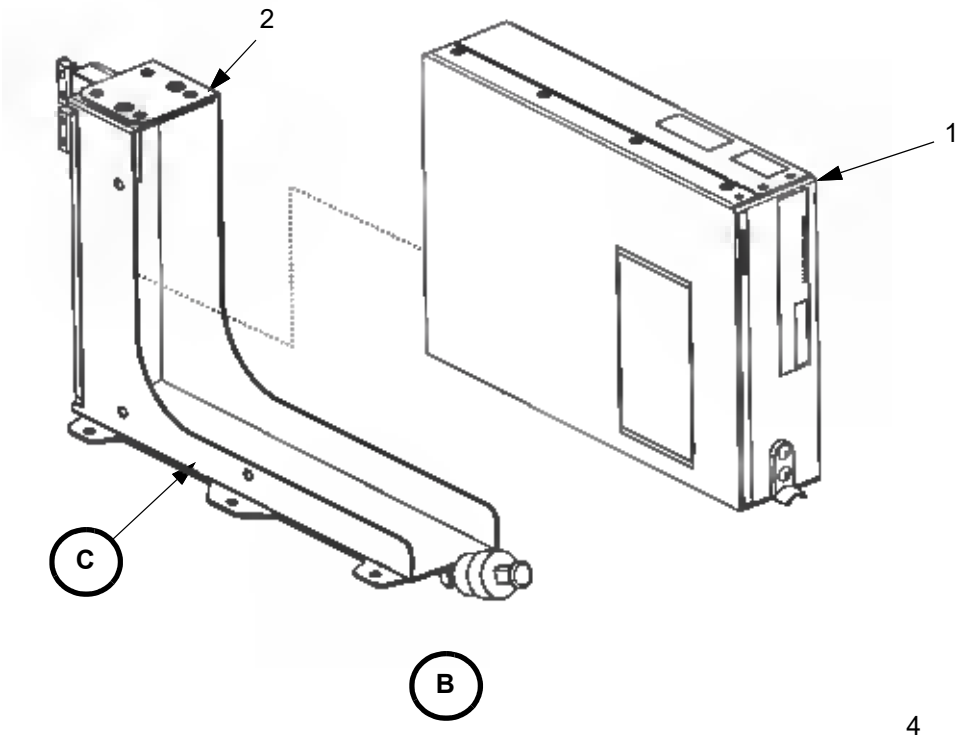

LEGEND

1. Garmin GSR 56 Transceiver
2. Garmin GSR 56 Remote Rack
3. Mounting plate
4. Screw
5. Washer
6. Nut

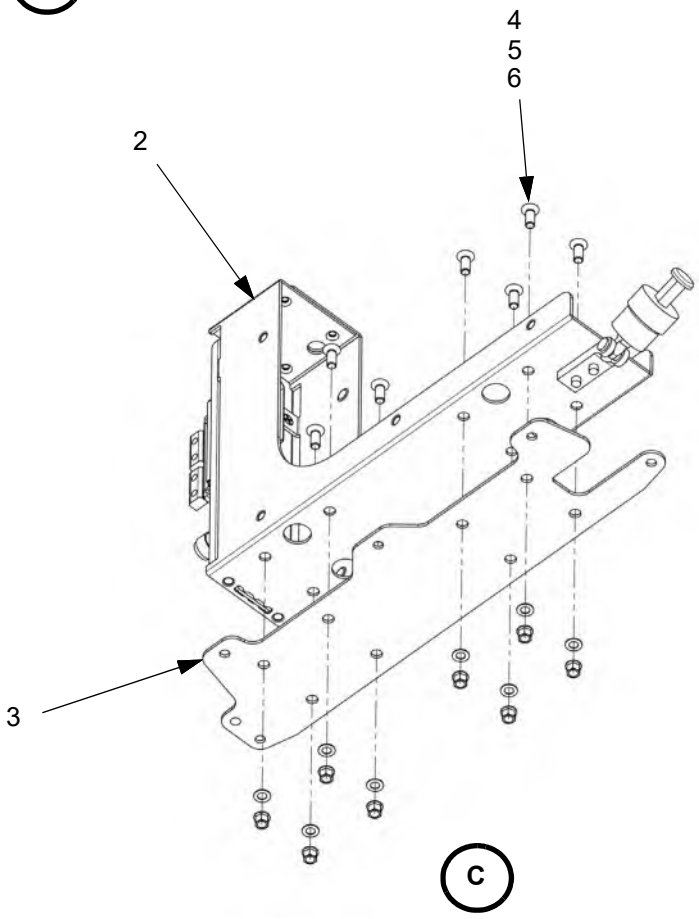

F. Garmin GDL 60 Datalink (SN: K014, K086 and On)

The GDL 60 is a remote mounted unit that provides a ground based broad-band datalink via a 4G LTE cellular radio, Wi-Fi (IEEE 802.11b/g/n) radio to the Garmin Integrated Flight Deck (GIFD). A second Wi-Fi and Bluetooth radio provides in-air connectivity between the GIFD and the Crew/Cabin Personal Electronic Devices (PEDs). Additionally, the GDL 60 supports four 10/100 Base T ethernet ports and four RS-232 ports for connectivity to the flight deck, data concentrators, and datalink radios including the Garmin Satellite Radio (GSR 56) Iridium SATCOM. The GDL 60 can be remotely woken (remote wake function) up by an SMS message which is generated either through the Garmin Pilot Application or the fly.garmin.com website.

WARNING: Pull and collar the DATA LINK 1 and DATA LINK 2 circuit breakers when working on the aircraft to prevent activation of the remote wake function

(1) Removal

(a) Set BATT 1 and BATT 2 switches to off.

(b) Disconnect external electrical power from the airplane (refer to Chapter 24-40).

(c) Pull and collar the DATA LINK 1 and DATA LINK 2 circuit breakers.

(d) Remove the center passenger floorboard (refer to Chapter 53-20).

(e) Disconnect the electrical connectors from the GDL 60 Datalink.

Note: WiFi antenna removal is only necessary if the GDL 60 is being replaced.

(f) Remove the (4) screws that attach the GDL 60 Datalink to the mounting bracket.

(g) Remove the GDL 60 Datalink.

(h) If required, remove the (4) bolts and washers that attach the mounting bracket to the floor support.

(i) Remove the mounting bracket.

(2) Installation

(a) If removed, put the mounting bracket in position and install the (4) bolts and washers that attach the mounting bracket to the floor support. Torque the bolts to 20 - 25 in-lbs.

(b) Put the GDL 60 Datalink in position and install the (4) screws that attach the GDL 60 Datalink to the mounting bracket. Torque the screw to 20 - 25 in-lbs.

(c) Connect the electrical connectors to the GDL 60 Datalink.

(d) If removed, install the Wi-Fi antenna

(e) Reset the DATA LINK 1 and DATA LINK 2 circuit breakers.

(f) Load software, configure, and test the GDL 60 (refer to Section 4 of the current revision of the Garmin GDL 60 Installation Manual, P/N 190-02525-00 and

Garmin G1000 NXi Integrated Avionics System Line Maintenance Manual for the Epic E1000, P/N 190-02330-01).

(g) Do the GDL 60 Operational Check.

(h) Install the center passenger floorboard (refer to Chapter 53-20).

(3) Operational Check

(a) Connect external electrical power to the airplane (refer to Chapter 24-40).

(b) Set BATT 1 and BATT 2 switches to ON.

(c) Make sure the DATA LINK 1 and DATA LINK 2 circuit breakers are in.

(d) Put the aircraft in Configuration mode:

(i) Pull the PFD 1, PFD 2 and MFD circuit breakers.

(ii) Set the BATT 1 and BATT 2 switches to ON.

(iii) Press ENTER on the pilot's PFD while resetting the PFD 1 circuit breaker.

(iv) Press ENTER on the co-pilot's PFD while resetting the PFD 2 circuit breaker.

(v) Press ENTER on the MFD while resetting the MFD circuit breaker.

(vi) INITIALIZING SYSTEM message should be displayed on all three displays.

(e) Use the FMS knob on the MFD to navigate to the Network Status page.

(f) LTE Network Status Check

(i) Verify Carrier says AT&T, Network Status says "Connected", and Signal Strength is displayed.

(g) Check the internal Bluetooth/Wi-Fi connection as follows:

(i) Press the "Internal" soft key to enter the Internal Wi-Fi Settings page.

(ii) Verify Bluetooth is set to enabled.

(iii) Using a Bluetooth enabled personal electronic device, attempt to connect to the GDL 60. The default Bluetooth name is "GDL60-xxxx" where xxxx is the MAC address for the unit.

(iv) A pop-up window will appear on the display asking to confirm the new Bluetooth pairing. A passkey must be compared on the display and on the personal electronic device before accepting the paring.

(v) Open the "Devices" page on the display and verify the personal electronic device was successfully paired.

(vi) Once completed, delete the new connection from the list of "Saved Devices".

(vii) From the Internal Wi-Fi Settings page, select the "Select Device" button.

(viii) Select the "GDL 60 Crew" button. This will display the GDL 60 Crew Wi-Fi network settings page. The Wi-Fi Network SSID and Password can be found on this page.

(ix) Using a Wi-Fi enabled personal electronic device, open the Wi-Fi settings page and connect to the GDL 60 network using the SSID and Password previously displayed.

(x) Select "Devices" tab and verify the device has successfully connected.

(xi) Once verified, delete the new connection from the list of "Saved Devices"

(h) Check the external Wi-Fi connection as follows:

(i) Cycle aircraft power to get out of Configuration mode.
(ii) Using a Wi-Fi enabled device, search for available Wi-Fi networks.
(iii) Select the aircrafts networks and connect. Enter the password if required.
(iv) Verify the connection is successful, Wi-Fi status should be “Connected”.
(v) Once completed, delete the new Wi-Fi connection from the list of Saved Wi-Fi Networks.

(i) Set BATT 1 and BATT 2 switches to off.

(j) Disconnect external electrical power from the airplane (refer to Chapter 24-40).

Figure 23-30.4: Garmin GDL 60 Datalink

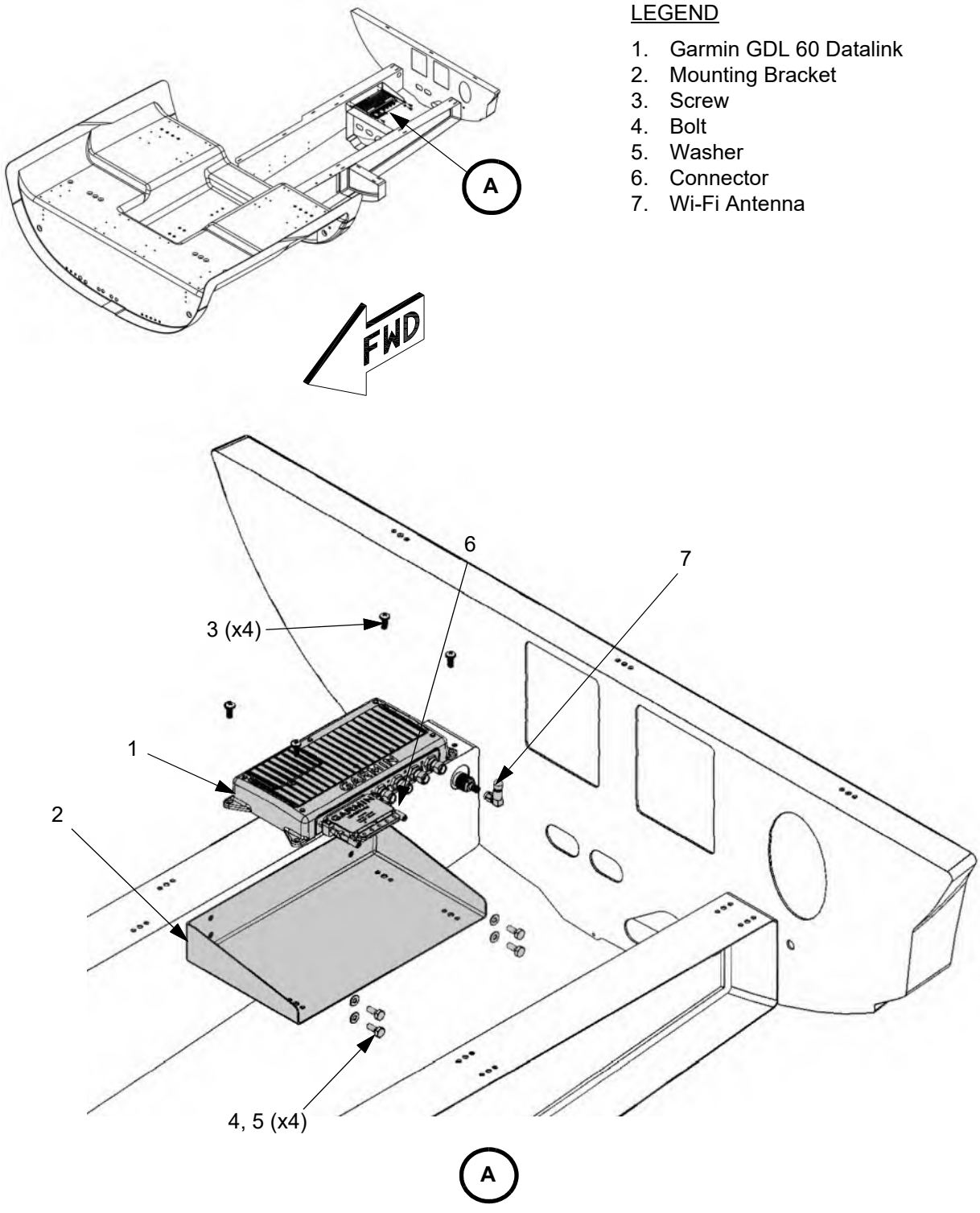

LEGEND

1. Garmin GDL 60 Datalink
2. Mounting Bracket
3. Screw
4. Bolt
5. Washer
6. Connector
7. Wi-Fi Antenna

G. Garmin GA-61 Antenna (SN: K014, K086 and On)

(1) Removal

(a) Set BATT 1 and BATT 2 switches to off.

(b) Disconnect external electrical power from the airplane (refer to Chapter 24-40).

(c) Pull and collar the DATA LINK 1 and DATA LINK 2 circuit breakers.

(d) Remove the cargo compartment floor bucket and floor panel (refer to Chapter 25-50 and 53-20).

(e) Use a plastic scraper to remove the sealant around the base of the antenna.

(f) Disconnect the electrical connectors from the antenna.

(g) Remove the (6) screws, washers, and nuts that attach the antenna to the fuselage.

(h) Carefully remove the antenna from the fuselage.

(i) Remove and discard the conductive gasket.

(2) Installation

(a) Clean the antenna base and mounting area of the fuselage with Scotch-Brite, then wipe with isopropyl alcohol and allow to dry.

(b) Put a new conductive gasket in position on the antenna.

(c) Put the antenna in position on the fuselage.

(d) Install the (6) screws, washers, and nuts that attach the antenna to the fuselage. Tighten the fasteners equally to 25 in-lbs.

(e) Connect the electrical connectors to the antenna.

(f) Verify continuity between the antenna connector and an aircraft ground strap for a maximum of 1 ohm resistance.

(g) Reset the DATA LINK 1 and DATA LINK 2 circuit breakers.

(h) Do the GDL 60 Operational Check.

(i) Run a bead of RTV 748 (MIL-A-46146) sealant around the base of the antenna.

(j) Install the cargo compartment floor bucket and floor panel (refer to Chapter 25-50 and 53-20).

Figure 23-30.5: Garmin GA-61 Antenna

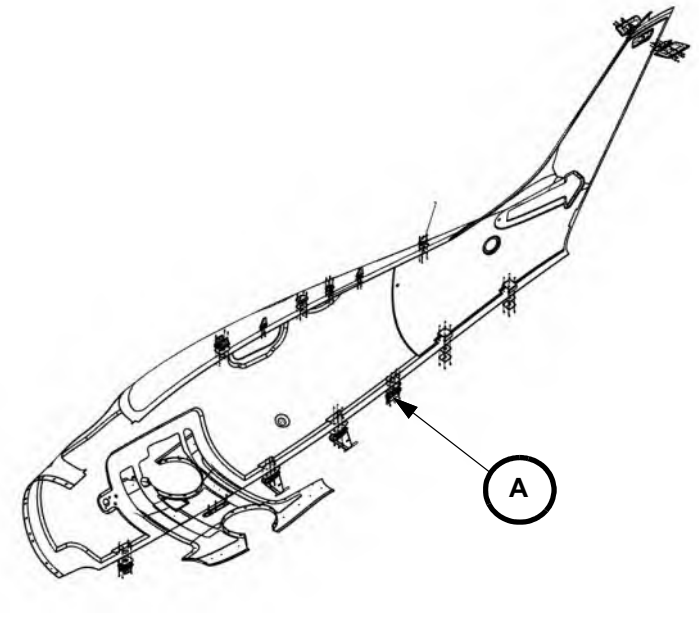

LEGEND

1. Garmin GA-61 Antenna
2. Conductive Gasket
3. Screw
4. Washer
5. Self-Locking Nut

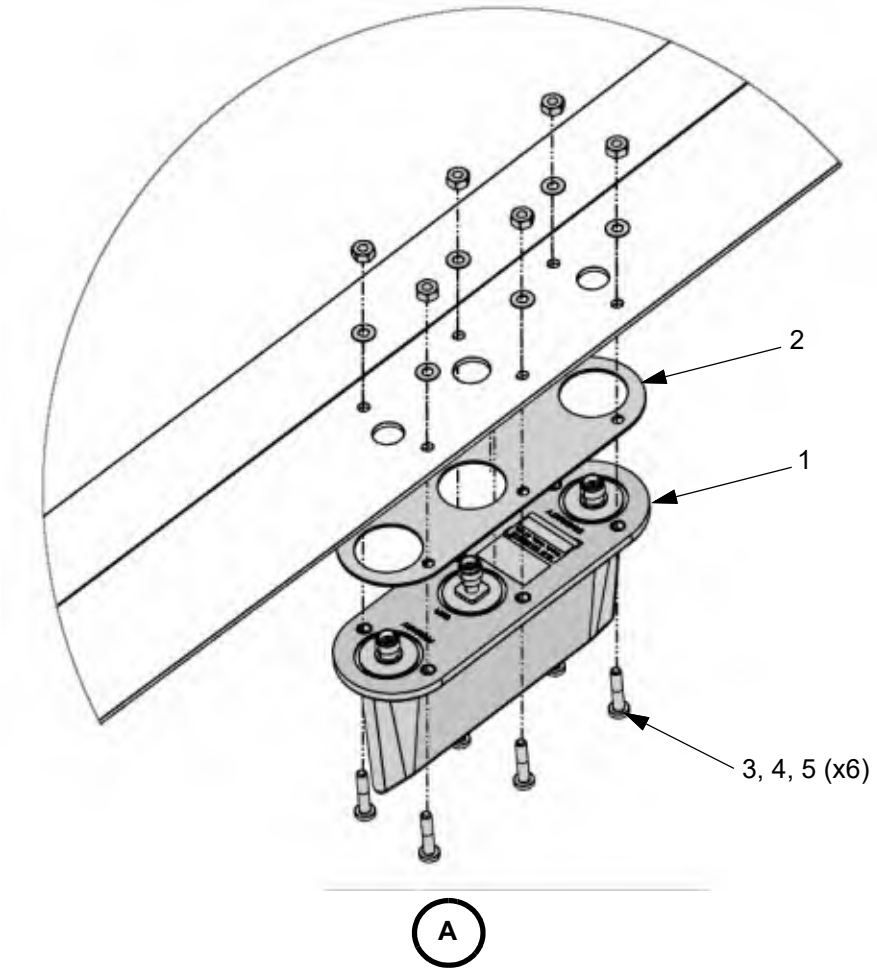

H. Starlink

(1) Troubleshooting

(a) Connect external electrical power to the airplane (refer to Chapter 24-40).

(b) Set BATT 1 and BATT 2 switches to ON.

(c) Set the STARLINK switch on the Climate Panel to ON position.

(d) Using a Wi-Fi enabled device, check the list of network settings and verify a Starlink network has appeared as a connection option.

(e) If Starlink Wi-Fi is not available, confirm 24-28V DC power at J907 connector at Starlink antenna.

(f) Refer to Starlink Help Center (https://starlink.com) for further troubleshooting.

(2) Removal

(a) Set BATT 1 and BATT 2 switches to off.

(b) Disconnect external electrical power from the airplane (refer to Chapter 24-40).

(c) Pull the STARLINK circuit breaker.

(d) Remove the (4) screws that attach the Starlink antenna fairing to the mounting tray and remove the fairing.

(e) Carefully lift the Starlink antenna from the mounting tray and disconnect the electrical connectors (J907 and P908) and remove the Starlink antenna.

(f) If removing the mounting tray, do the steps that follow:

(i) Remove the Overhead Finish panel (refer to Chapter 25-20).

(ii) Remove the AC Turn Duct Access Panel (refer to Chapter 25-20)

(iii) Remove the (2) bolts, (4) washers, and (2) nuts that attach the mounting tray to the fuselage, and remove the mounting tray.

(3) Installation

(a) If removed, put the mounting tray in place on the fuselage.

(b) Clean any remaining RTV from the mounting tray with a non-metallic scraper and isopropyl alcohol.

(c) Apply RTV 100 to the face of the AN 970 washers that will contact the mounting tray.

(d) Install the (2) bolts, (4) washers, and (2) nuts that attach the mounting tray to the fuselage. Torque the nuts to 20 - 25 in-lbs.

(e) Clean any excess RTV from the mounting tray.

(f) Install the AC Turn Duct Access Panel (refer to Chapter 25-20)

(g) Install the Overhead Finish panel (refer to Chapter 25-20).

(h) Connect the electrical connectors (J907 and P908) to the Starlink antenna and place the antenna in the mounting tray.

(i) Put the fairing in position on the mounting tray and install the (4) screws that attach the fairing to the mounting tray. Torque the screws to 12 - 15 in-lbs.

(j) Do the Starlink Operational Check.

(4) Operational Check

(a) Make sure the STARLINK circuit breaker is in.

(b) Connect external electrical power to the airplane (refer to Chapter 24-40).

(c) Set BATT 1 and BATT 2 switches to ON.

(d) Set the STARLINK switch on the Climate Panel to ON position.

(e) Using a Wi-Fi enabled device, check the list of network settings and verify a Starlink network has appeared as a connection option.

(f) Using an electronic device with an ethernet port, connect the electronic device to the cabin ethernet port J909 and verify the Starlink router appears and connects to the device.

(g) Set BATT 1 and BATT 2 switches to off.

(h) Disconnect external electrical power from the airplane (refer to Chapter 24-40).

Figure 23-30.6: Starlink

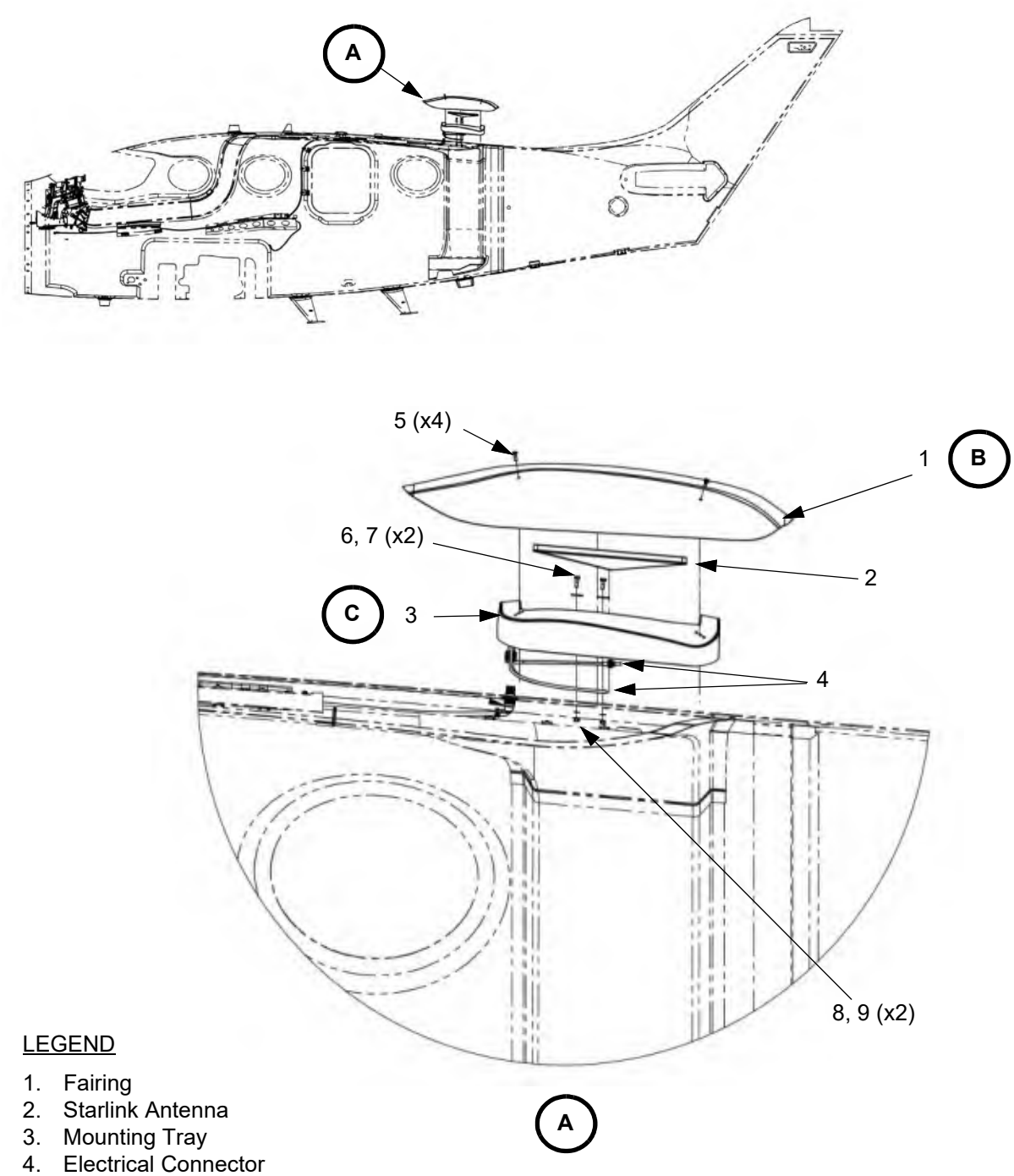

LEGEND

1. Fairing
2. Starlink Antenna
3. Mounting Tray
4. Electrical Connector
5. Screw
6. Bolt
7. AN970 Washer
8. NAS1149 Washer
9. Nut
10. Foam Tape

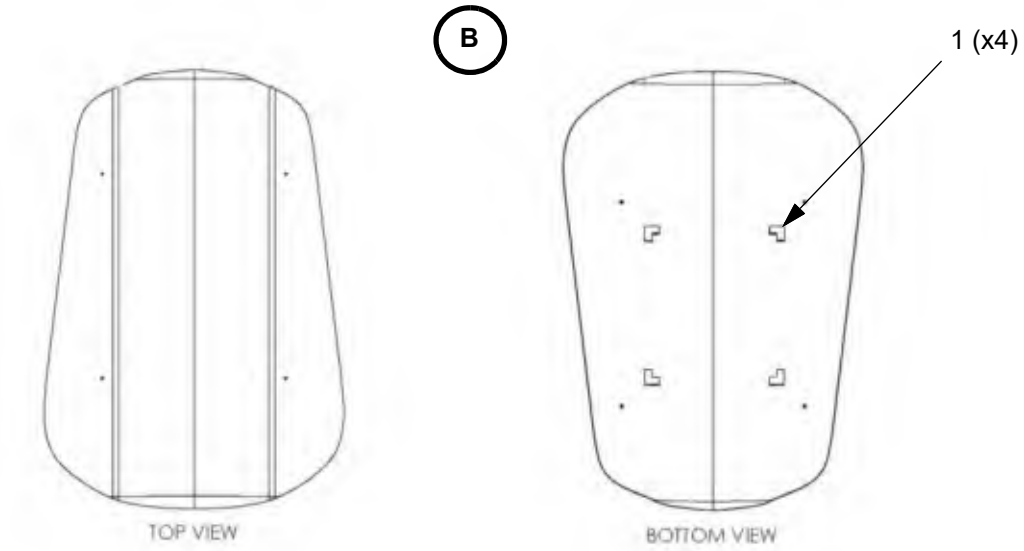

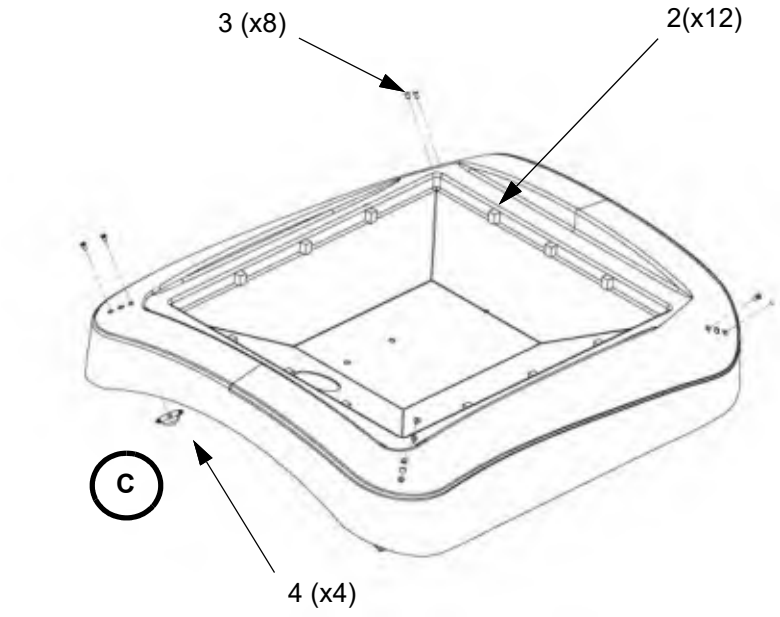

LEGEND

1. Foam Tape 1/2 In. thick
2. Foam Tape 1/4 In. thick
3. Rivet
4. Nutplate

This Page Intentionally Left Blank

AUDIO INTEGRATING

1. Description

The Garmin GMA 350 Audio Panel is a digital audio panel with integrated marker beacon receiver. It gives control of all cockpit intercom/microphone systems as well as NAV/COM/ILS audio. A split COMM transceiver function lets the copilot transmit and receive on one COMM while the pilot transmits and receives on another. As a marker beacon receiver it has lamp driver outputs.

Refer to the current revision of the Garmin G1000 NXi Integrated Avionics System Line Maintenance Manual for the Epic E1000, P/N 190-02330-01 for component and system descriptions.

2. Maintenance Practices

A. GMA 350 Audio Panel

(1) Removal

(a) Verify the BATT 1 and BATT 2 switches are set to OFF.

(b) Disconnect external electrical power from the airplane (refer to Chapter 24-40).

(c) Insert a 3/32” hex tool into the socket in the lower center of the faceplate.

(d) Turn the hex nut counterclockwise until the GMA 350 is unlocked from its housing.

(e) Carefully remove the GMA 350 from the instrument panel.

(2) Installation

(a) Inspect the connectors to ensure there are no bent or damaged pins. Repair any damage.

(b) Insert the GMA 350 into its housing.

(c) Turn the hex nut clockwise which will pull the unit inward until it is seated in its mount. Do not over-tighten the nut.

(d) Set the BATT 1 and BATT 2 switches to ON or connect a ground power unit to the airplane (refer to Chapter 24-40).

(e) Load software, configure, and test the GMA 350 as specified in the latest revision of the Garmin G1000 NXi Integrated Avionics System Line Maintenance Manual for the Epic E1000, P/N 190-02330-01.

(3) Verify Fail-Safe Operation

Verify Fail-Safe operation of the GMA350 every 5000 hours.

(a) Remove power to the unit by pulling the audio breaker.

(b) Connect a mono headset to the pilot's headset output jack and pilot's mic jack.

Note: Use of a true mono headset is required for this test to insure proper wiring even if a stereo jack is provided in the installation. Wiring left channel (tip contact) and right channel (ring contact) backwards will cause failsafe mode not to function with mono headsets. Use of a true mono headset is required for this test (not a stereo headset with a mono/stereo switch because headset manufactures differ on how they accomplish this switching). This will guarantee the condition of the right channel (ring terminal) being shorted to the return (sleeve terminal) by the mono headset's plug. This short occurs because of the physical design of the headset plug contacts and is an inevitable consequence of plugging a mono headset into a stereo jack. During power-on operation, this short will not damage the audio panel.

(c) Verify that COM1 transceiver can be heard in the pilot's headset.

(d) Verify that COM1 can key and transmit the pilot's mic audio by verifying received sidetone or checking reception of the transmission with another radio tuned to receive this transmission (verify Pilot PTT and mic operation is delivered to this transceiver).

(e) Apply unit power by restoring the audio breaker to the normal operating position.

(4) Audio panel Operational Check

(a) Verify the function of the Marker Beacon, ICS keys, Passenger Isolation toggle key, clearance recorder Play key, Com Active output, Middle Marker Sense output, and Bluetooth which are listed as optional equipment in the Garmin instructions.

(b) Make sure the HEADSET circuit breaker is in. Listen to each headset to verify that active noise canceling is functional.

Note: Audio must be functional in each headset regardless of the HEADSET circuit breaker position.

(c) Music Inputs

(i) Verify Telephone and Music Operation if installed.

(ii) De-select or turn off other audio sources (MKR, transceivers, receivers, alerts). Some configurations may mute telephone and/or music audio when aircraft audio is present.

(iii) From the pilot’s headset position, verify that all installed music sources can be heard when selected (refer to the applicable pilot’s guide for information on how telephone and music audio can be distributed and insure that it is configured to be heard by the pilot).

Figure 23-50.1: GMA 350 Audio Panel

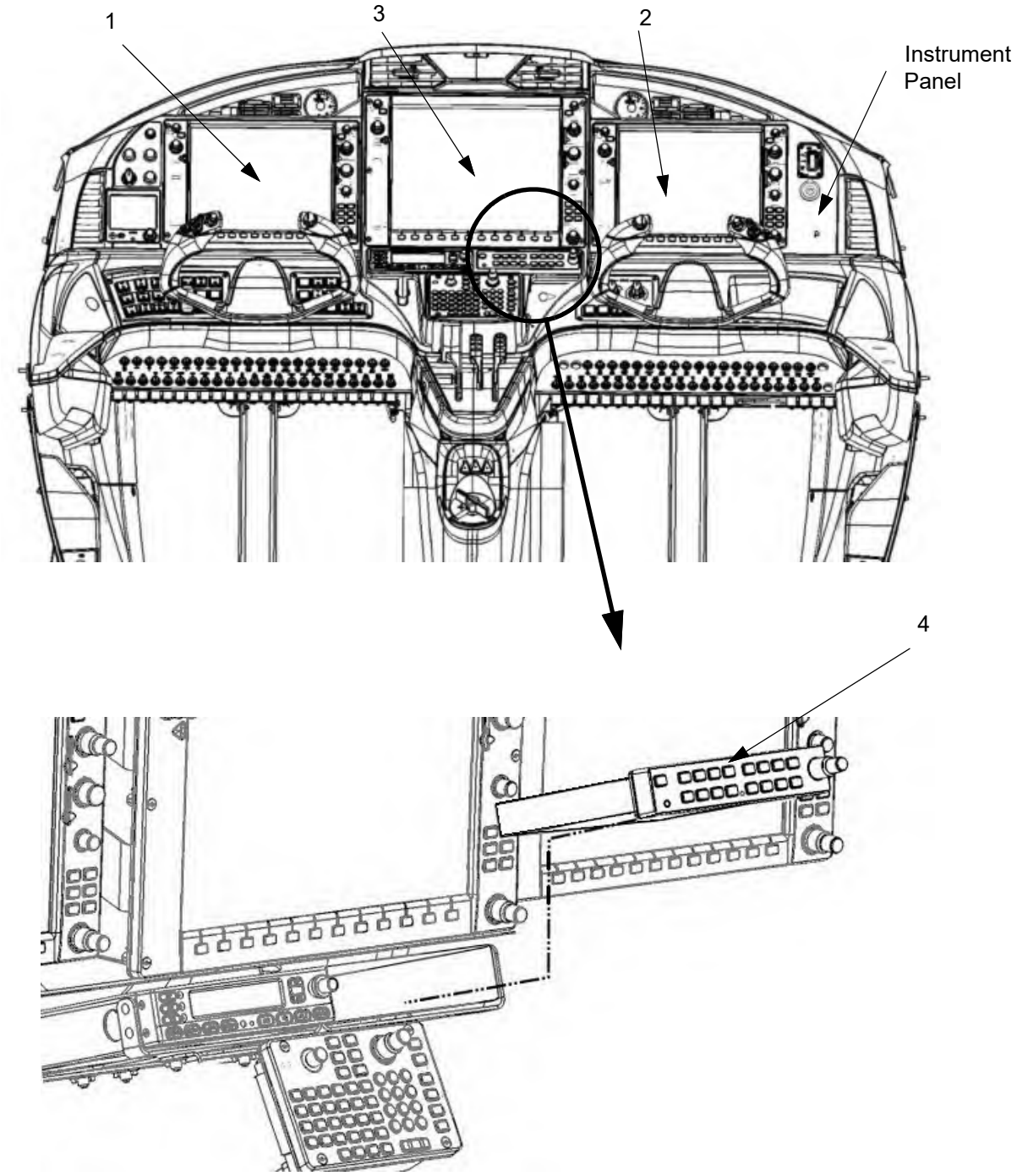

LEGEND

1. GDU 1050 PFD 1
2. GDU 1050 PFD 2
3. GDU 1250 MFD
4. GMA 350

This Page Intentionally Left Blank

STATIC DISCHARGING

1. Description

The airplane is susceptible to accumulating a static electrical charge during flight. This electrical charge is transferred from the airplane skin to the air using a static discharge system of static wicks. Procedures for testing the static wicks.and their connection to the lightning protection mesh as well as removal and replacement of the wicks and bases are given in this section.

2. Maintenance Practices

If there is a lightning strike, all static wicks and bases on the airplane must be inspected. Wicks and bases subject to damage, or within two feet of the affected area, from the strike must be replaced.

A. Static Wick

(1) Removal

(a) Remove the screw holding the wick to the pad.

(b) Hold the wick on the metal end inserted into the base. Do not hold the flexible part of the wick.

(c) Carefully pull the wick out of the pad. Careful use of pliers is acceptable as long as only the metal end of the wick is gripped.

(2) Installation

(a) Remove the screw from the end of the wick if the screw is installed.

(b) Insert the attachment end of the wick into the base. The attachment end is tapered and fits snuggly into the base with little effort.

(c) Apply Loctite™ 242 to the threads of the screw then install the screw through the base and into the wick. Tighten the screw snug.

(3) Inspection

The static wicks should be inspected if excessive noise or electrical interference occurs in the radio or other electrical systems in the airplane during flight, or if the airplane has been struck by lightning. The static wick must be replaced if it fails any of the following tests:

(a) Hold the attachment end of the wick stationary then grip the trailing end between the thumb and forefinger. Gently move the trailing end approximately 2 inches in any direction. If the wick bends sharply at the attachment base, the wick is broken.

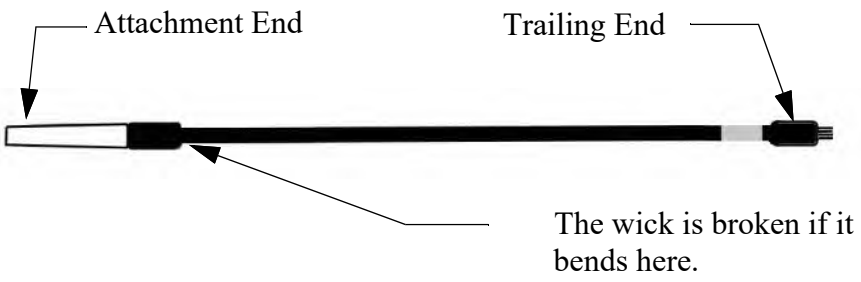

(b) Examine the insulating coating on the wick. The coating should be continuous with no cuts or breaks.

(c) Compare the exposed strands at the trailing end of the wick with those of a new wick. The density of strands should be identical.

(4) Testing

The static wicks must be tested for electrical resistance upon installation and annually.

Note: The following may be performed with the static wick installed or removed.

(a) Use a megohmmeter to measure the electrical resistance between the attachment end of the static wick and the cluster of strands at the tip. Measure the resistance in accordance with the megohmmeter manufacturer's instructions.

(b) Replace the wick if the measured resistance is less than 5 megohms or greater than 200 megohms.

B. Static Wick Base

(1) Removal

(a) Remove the static wick.

(b) Carefully separate the base from the conductive adhesive using a knife or a chisel. Do not damage the expanded copper foil or the skin of the airplane.

(c) Dispose of the base.

(2) Installation

(a) Lightly sand the bottom of the static wick base to remove the anodizing and to roughen the surface.

(b) Remove any conductive adhesive from the airplane where the base is to be installed using 80 grit sandpaper. Do not damage the expanded copper foil.

(c) Lightly sand the expanded copper foil to ensure a good bond with the static wick base. The sanded area should be the same size as the base or slightly larger.

(d) Clean the surfaces to be bonded using acetone and clean paper towels. Let the acetone completely dry.

(e) Bond the base to the airplane using LP-89 manufactured by Lunar Products, Inc. or Loctite™ CT 5047-2 A/B manufactured by Henkel, Corporation. Mix and apply the adhesive according to the manufacturer's instructions.

(f) Wipe any excess adhesive away before full cure using a clean dry cloth.

(g) Let the adhesive fully cure (refer to the manufacturer's instructions).

(3) Electrical Continuity Testing

(a) Attach one lead of a Voltage Ohm Meter (VOM) to the static wick pad.

(b) Attach the other lead to the nearest part of the airplane that is well grounded. Acceptable grounds are, but not limited to: bonding jumpers or their fasteners, bonding straps, electrical grounds, fasteners that are known to go through lightning mesh, etc. Hinges are not to be used for continuity verification for any static wick bases.

(c) Verify continuity of the lightning protection mesh between the static wick pad and the electrical ground.

(d) If resistance is greater than 10.0 ohms determine the cause then either repair the lightning protection mesh or remove and replace the static wick base, as applicable.

Figure 23-60.1: Static Wicks (Sheet 1 of 3

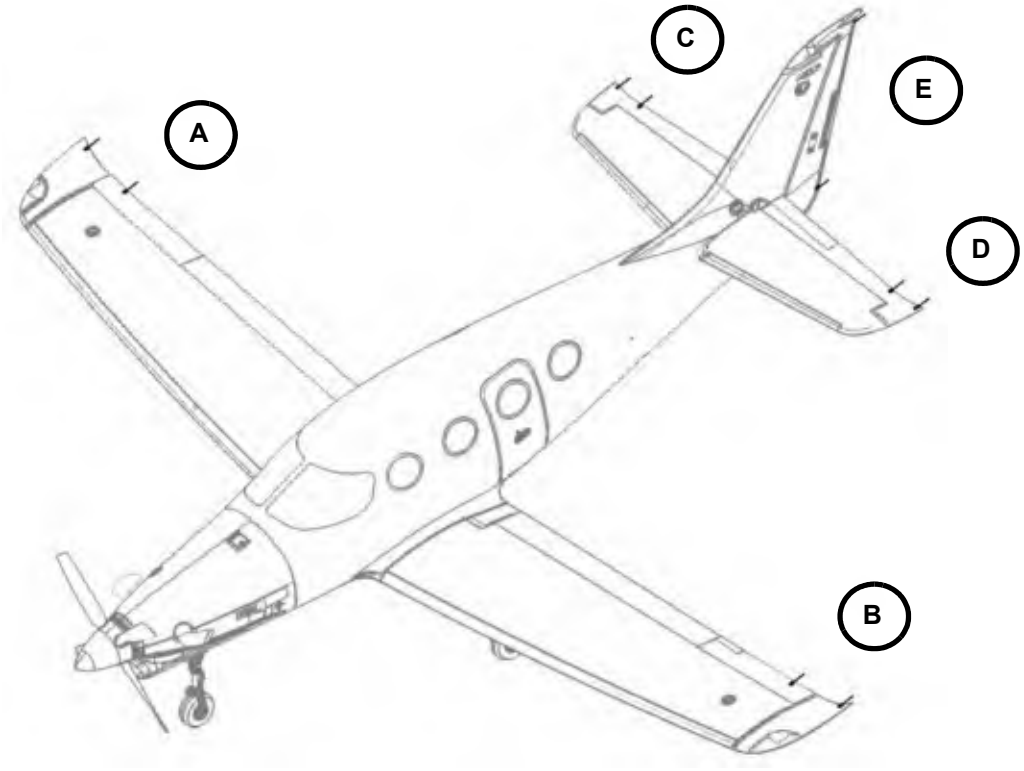

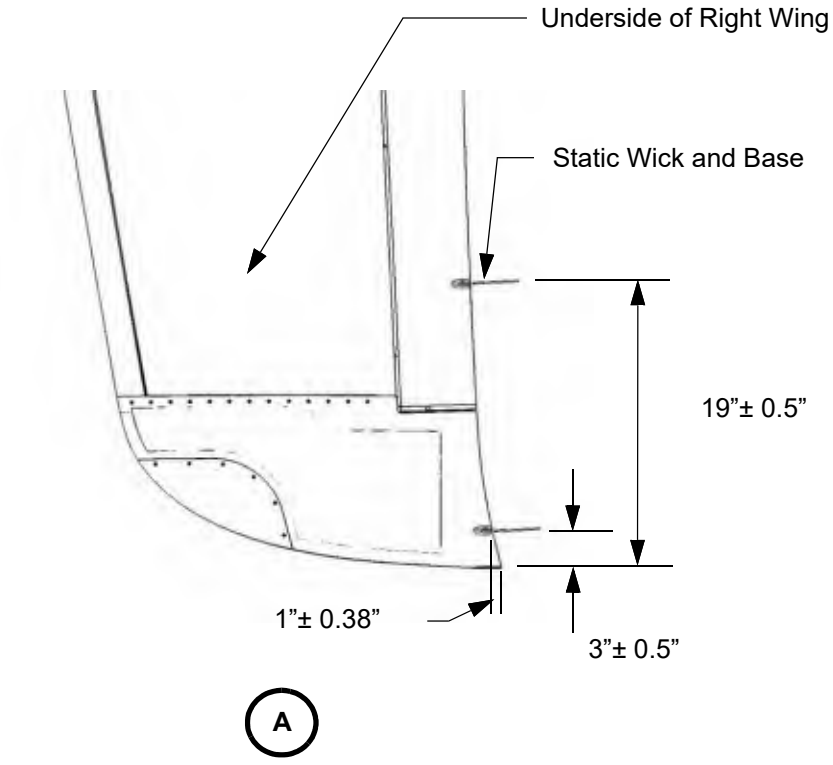

Figure 23-60.1: Static Wicks (Sheet 2 of 3)

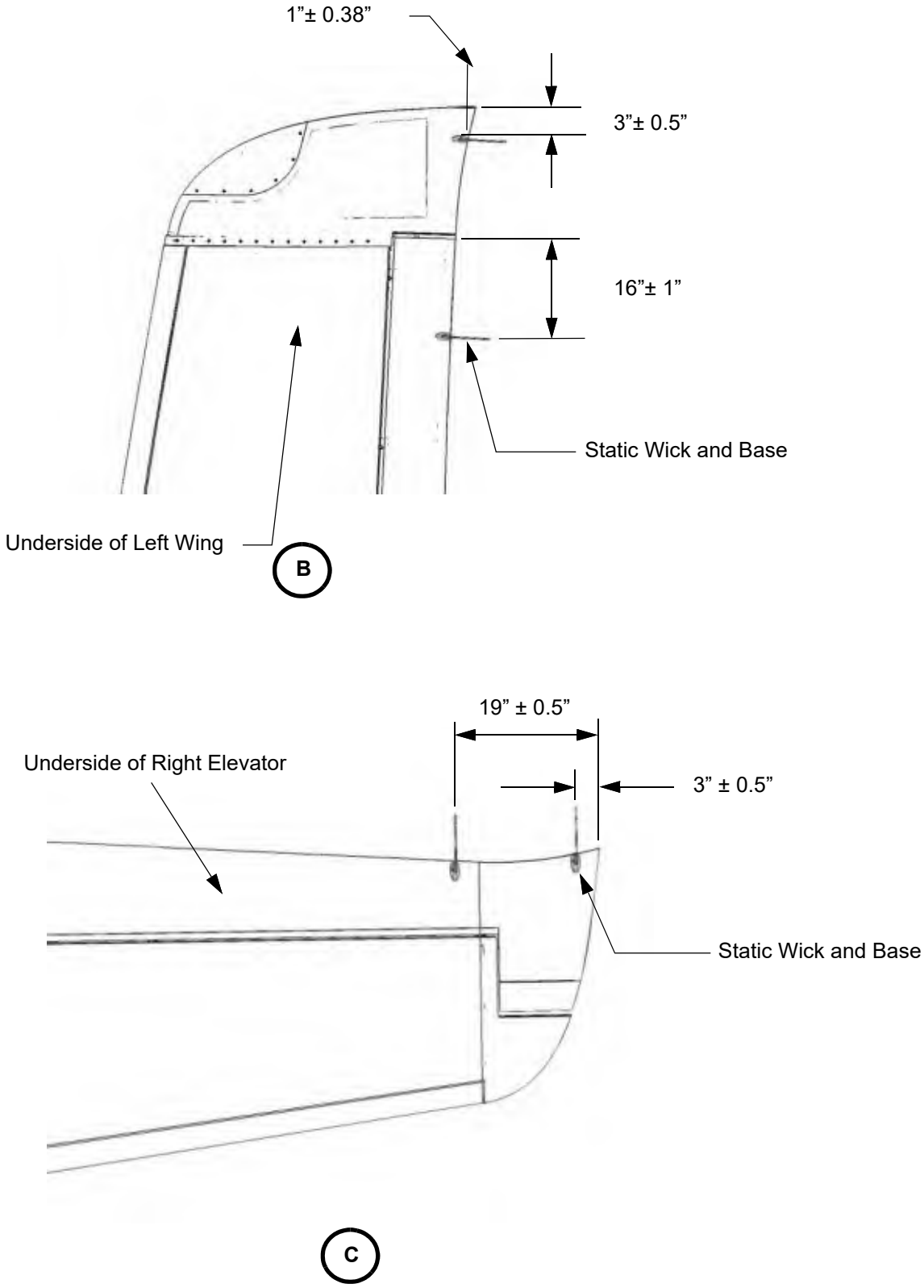

Figure 23-60.1: Static Wicks (Sheet 3 of 3)

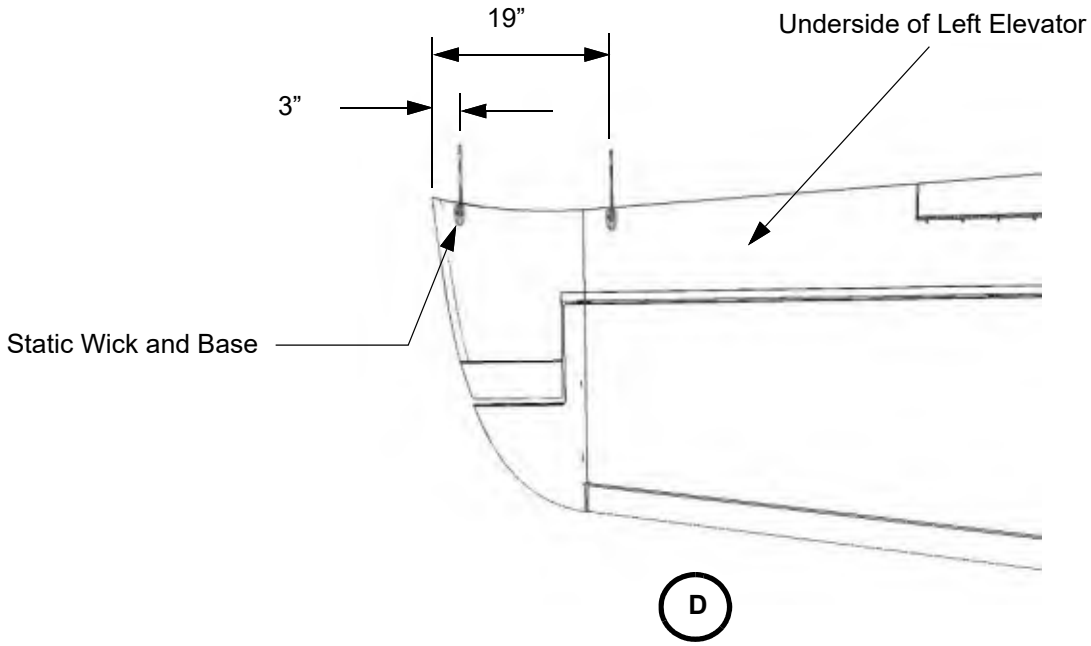

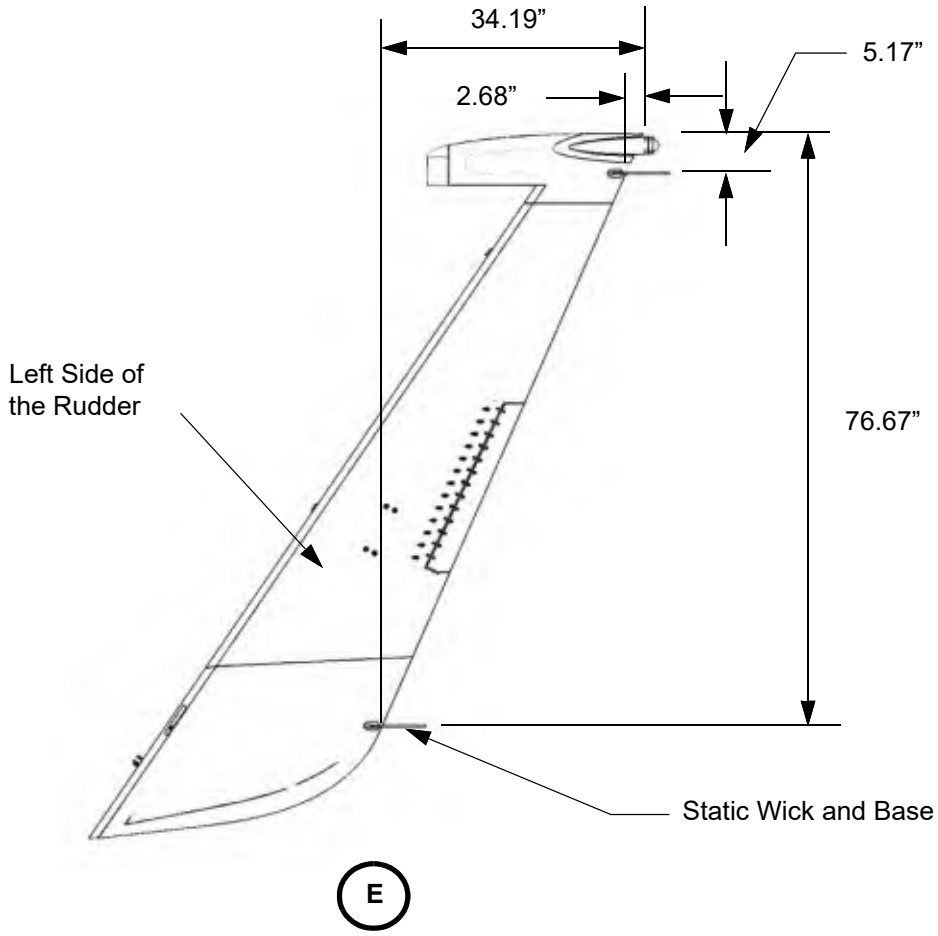

CYBERSECURITY

1. Description

Operators and maintenance personnel have specific responsibilities around maintaining the cybersecurity of the aircraft and its systems.

2. Electronic Devices

Various electronic devices (e.g., PEDs and Removable Media) may be used to interact with the G1000 NXi system. Operators and maintainers are recommended to keep all devices updated with the latest security patches available. They should also ensure that these devices are only used by trusted personnel.

When pairing a device to the system using Bluetooth, the operator or maintainers should always reject a Bluetooth pairing request if the PINs shown on the device and on the G1000 NXi display are not identical. Additionally, any pairing request originating from an unexpected, unknown, or suspicious device should be rejected.

If any previously paired device is lost or stolen, that device should be immediately deleted from the G1000 NXi system's paired device list and the credentials used to pair that device with the system should be changed.

The GDU is the only LRU in the G1000 NXi system that an operator or maintainers should physically connect a device to.

3. Field-Loadable Data

Software, PDI, and databases that are loaded to the aircraft should be sourced only from an authorized dealer.

4. Security Event Logging

Security event logs will be generated and stored by the G1000 NXi system over the course of the aircraft's life cycle. These logs may be used to alert an operator to an unsafe condition in their aircraft or to assist maintainers in performing a restorative action. Not all logs will generate an alert for operator or maintainer action, and logs alone should not be used as the sole basis for determining required maintenance and return-to-service activities.

A. Security Event Log Review (K014, K086 and On)

Operators and maintainers should review security event logs for any events with a severity of *Warning*. See 23-70.4.B Maintenance Practices for instructions to download the Security Event Log.

If logs with a severity of *Warning* are found, the operator or maintainers should:

(1) Confirm that all logs with severity of *Warning* originate from the GMA.
(2) Confirm that the GMA is installed in accordance with this manual.
(3) Confirm that the software version of the GDUs and GMA are in accordance with the type certificate of the aircraft.

If any of these steps fail, the operator or maintainer should contact Garmin Product Support and provide the logs for assistance. If all these steps pass, it is recommended to reload the software for the installed GMA before the next flight. If all steps pass on the next review, and *Warning* severity logs continue to be generated, the operator or maintainer should contact Garmin product support and provide the logs for further assistance. It is recommended that the GMA is disabled during operation until Garmin and the operator or maintainer can confirm the security of the system.

No logs should be generated with the severity of Emergency, Alert, Critical, or Error. Notice, Informational, and Debug severity logs do not require a review and may be used to provide context to higher severity logs.

The first row of security event logs should be formatted as follows:

- Column A: #airframe_info
- Column B: Product name
- Column C: Airframe name
- Column D: Unit software part number
- Column E: Unit software version
- Column F: System software part number
- Column G: System ID
- Column H: Tail number

All rows after the first should only include security event logs. The format of security event logs is as follows:

- Column A: LRU that generated the log
- Column B: Event ID of the log per the generating LRU
- Column C: Severity level of that log
- Column D: Which power count of the generating LRU the log was generated during
- Column E: time, in milliseconds, when the log was generated; no GPS signal may cause this to be inaccurate
- Column F: time, in milliseconds, when the log was generated after the generating LRU was powered on
- Column G: Log contextual information

If logs with the severity Emergency, Alert, Critical, or Error are found during review, or the format of security event logs is not as described above, the operator or maintainer should contact Garmin product support and provide the logs for further assistance.

B. Maintenance Practices

(1) Configuration Mode Security Event Download

(a) Boot to configuration mode

(b) On any PFD or MFD, navigate through:

(i) System -> Maintenance Logs -> Security Event Logs folder

(c) Hit “enter” on the Security Event Logs folder

(d) Scroll to desired log for export and hit “enter” on the “export” button

(e) Select the desired manual export mode

(f) Select the desired data to export

(g) Insert an SD card into the top slot of the display mentioned in the manual export mode

(h) Select “OK” to begin data export

(i) If it returns “failed”, confirm you have the SD card fully inserted in the top slot of the correct GDU

(2) Normal Mode Security Event Log Download

(a) Boot to normal mode

(b) On a GTC, navigate through:

(i) Home -> Aircraft Systems -> Maintenance -> CMC logs

(c) Within the CMC logs tab, select:

(i) Security Event Logs -> Select desired log(s) -> choose manual export mode

(d) Insert an SD card into the top slot of the display mentioned in the manual export mode

(e) Tap “export”

This Page Intentionally Left Blank

CHAPTER 24

Electrical Power

This Page Intentionally Left Blank

List of Effective Pages

Chapter/Section	Page Number	Effective Date
24-Title	Page 1	02 Jan 2020
24-Title	Page 2	02 Jan 2020
24-LOEP	Page 1	08 Sep 2026
24-LOEP	Page 2	08 Sep 2026
24-LOEP	Page 3	08 Sep 2026
24-LOEP	Page 4	13 Apr 2020
24-TOC	Page 1	10 Jul 2025
24-TOC	Page 2	10 Jul 2025
24-00	Page 1	10 Jul 2025
24-00	Page 2	20 Oct 2023
24-00	Page 3	02 Jan 2020
24-00	Page 4	02 Jan 2020
24-00	Page 5	02 Jan 2020
24-00	Page 6	08 Sep 2026
24-00	Page 7	08 Sep 2026
24-00	Page 8	08 Sep 2026
24-00	Page 9	08 Sep 2026
24-00	Page 10	08 Sep 2026
24-00	Page 11	08 Sep 2026
24-00	Page 12	08 Sep 2026
24-30	Page 1	10 Jul 2025
24-30	Page 2	10 Jul 2025
24-30	Page 3	10 Jul 2025
24-30	Page 4	10 Jul 2025
24-30	Page 5	10 Jul 2025
24-30	Page 6	10 Jul 2025
24-30	Page 7	10 Jul 2025
24-30	Page 8	10 Jul 2025
24-30	Page 9	10 Jul 2025
24-30	Page 10	10 Jul 2025
24-30	Page 11	10 Jul 2025
24-30	Page 12	10 Jul 2025
24-30	Page 13	10 Jul 2025
24-30	Page 14	10 Jul 2025
24-30	Page 15	10 Jul 2025
24-30	Page 16	10 Jul 2025
24-30	Page 17	10 Jul 2025
24-30	Page 18	10 Jul 2025
24-30	Page 19	10 Jul 2025
24-30	Page 20	10 Jul 2025

24-30 ..... Page 21 ..... 10 Jul 2025
24-30 ..... Page 22 ..... 10 Jul 2025
24-30 ..... Page 23 ..... 08 Sep 2026
24-30 ..... Page 24 ..... 08 Sep 2026
24-30 ..... Page 25 ..... 08 Sep 2026
24-30 ..... Page 26 ..... 08 Sep 2026
24-30 ..... Page 27 ..... 08 Sep 2026
24-30 ..... Page 28 ..... 08 Sep 2026
24-30 ..... Page 29 ..... 08 Sep 2026
24-30 ..... Page 30 ..... 08 Sep 2026
24-30 ..... Page 31 ..... 08 Sep 2026
24-30 ..... Page 32 ..... 08 Sep 2026
24-30 ..... Page 33 ..... 08 Sep 2026
24-30 ..... Page 34 ..... 08 Sep 2026
24-30 ..... Page 35 ..... 08 Sep 2026
24-30 ..... Page 36 ..... 08 Sep 2026
4-30 ..... Page 37 ..... 08 Sep 2026
24-30 ..... Page 38 ..... 08 Sep 2026

24-40 ..... Page 1 ..... 10 Jul 2025
24-40 ..... Page 2 ..... 08 Apr 2024
24-40 ..... Page 3 ..... 08 Sep 2026
24-40 ..... Page 4 ..... 08 Sep 2026

24-60 ..... Page 1 ..... 10 Jul 2025
24-60 ..... Page 2 ..... 02 Jan 2020
24-60 ..... Page 3 ..... 02 Jan 2020
24-60 ..... Page 4 ..... 02 Jan 2020
24-60 ..... Page 5 ..... 02 Jan 2020
24-60 ..... Page 6 ..... 02 Jan 2020
24-60 ..... Page 7 ..... 02 Jan 2020
24-60 ..... Page 8 ..... 10 Jul 2025
24-60 ..... Page 9 ..... 10 Jul 2025
24-60 ..... Page 10 ..... 10 Jul 2025
24-60 ..... Page 11 ..... 10 Jul 2025
24-60 ..... Page 12 ..... 10 Jul 2025
24-60 ..... Page 13 ..... 10 Jul 2025
24-60 ..... Page 14 ..... 10 Jul 2025
24-60 ..... Page 15 ..... 10 Jul 2025
24-60 ..... Page 16 ..... 10 Jul 2025
24-60 ..... Page 17 ..... 10 Jul 2025
24-60 ..... Page 18 ..... 10 Jul 2025
24-60 ..... Page 19 ..... 10 Jul 2025
24-60 ..... Page 20 ..... 10 Jul 2025

Table of Contents

List of Effective Pages ..... 24-LOEP / Page 1
Table of Contents ..... 24-TOC / Page1

Paragraph **Page Number**

Electrical Power

1. General ..... 24-00 / Page 1
   A. Electrical System Block Diagram (K003-K085, Excluding K014) ..... 24-00 / Page 2
   C. Main Aircraft Batteries (K003-K085, Excluding K014) ..... 24-00 / Page 4
   E. Electrical Power Generation ..... 24-00 / Page 4
   F. Electrical Power Distribution ..... 24-00 / Page 5
2. Troubleshooting ..... 24-00 / Page 6
   A. Main Electrical Power Check ..... 24-00 / Page 9
   B. Starter Generator ..... 24-00 / Page 11
   C. Standby Alternator ..... 24-00 / Page 11

DC Generation

1. Description ..... 24-30 / Page 1
2. Maintenance Practices ..... 24-30 / Page 2
   A. Batteries (SN: K003 - K085, Excluding K014) ..... 24-30 / Page 2
   B. Batteries (SN: K014, K086 and On) ..... 24-30 / Page 9
   C. Master Control Unit (MCU) ..... 24-30 / Page 23
   D. Starter/Generator Brush Inspection ..... 24-30 / Page 27
   E. Starter/Generator ..... 24-30 / Page 27
   F. Standby Alternator ..... 24-30 / Page 29
   G. Generator Control Unit (GCU) ..... 24-30 / Page 32
   H. Alternator Control Unit ..... 24-30 / Page 35

External Power

1. Description ..... 24-40 / Page 1
2. Maintenance Practices ..... 24-40 / Page 1
   A. External Power Receptacle ..... 24-40 / Page 1
   B. External Power Application ..... 24-40 / Page 2

DC Electrical Load Distribution

1. Description ..... 24-60 / Page 1
   A. Power Distribution ..... 24-60 / Page 1
   B. Circuit Protection ..... 24-60 / Page 1
   C. Switches ..... 24-60 / Page 2
   D. Transmission Wire ..... 24-60 / Page 2
   E. Convenience Power ..... 24-60 / Page 2

2. Maintenance Practices ..... 24-60 / Page 2
A. Circuit Breakers ..... 24-60 / Page 2
B. Switches ..... 24-60 / Page 6
C. 5V Output Voltage Step Down Converter ..... 24-60 / Page 18

ELECTRICAL POWER

1. General

The electrical system on the airplane is a 28VDC system with split bus architecture and provisions for joining the buses together through an energized contactor. Primary electrical power generation is from an engine driven 28V, 300A starter-generator. Secondary electrical power generation is from an engine driven 41A alternator. On Serial numbers K003-K085 (excluding K014) two sealed 24V (25Ah each) lead acid batteries power the starter generator for starting the engine and act as emergency power if there is a starter-generator and alternator failure. On Serial numbers K014, K086 and on, two sealed 24v (20Ah each) lithium-ion batteries power the starter generator for starting the engine and act as emergency power if there is a starter-generator and alternator failure. The batteries will function with loss of the alternator, but not exclusively. Loss of the generator only will start to engage the back up battery power. An external socket permits a Ground Power Unit to power the airplane and/or charge the batteries.

K003-K085 (excluding K014), refer to the current revision of the E1000 Wiring Manual, P/N SK05000002.

K014, K086 and on, refer to the current revision of the E1000 Wiring Manual, P/N SK05003002.

A. Electrical System Block Diagram (K003-K085, Excluding K014)

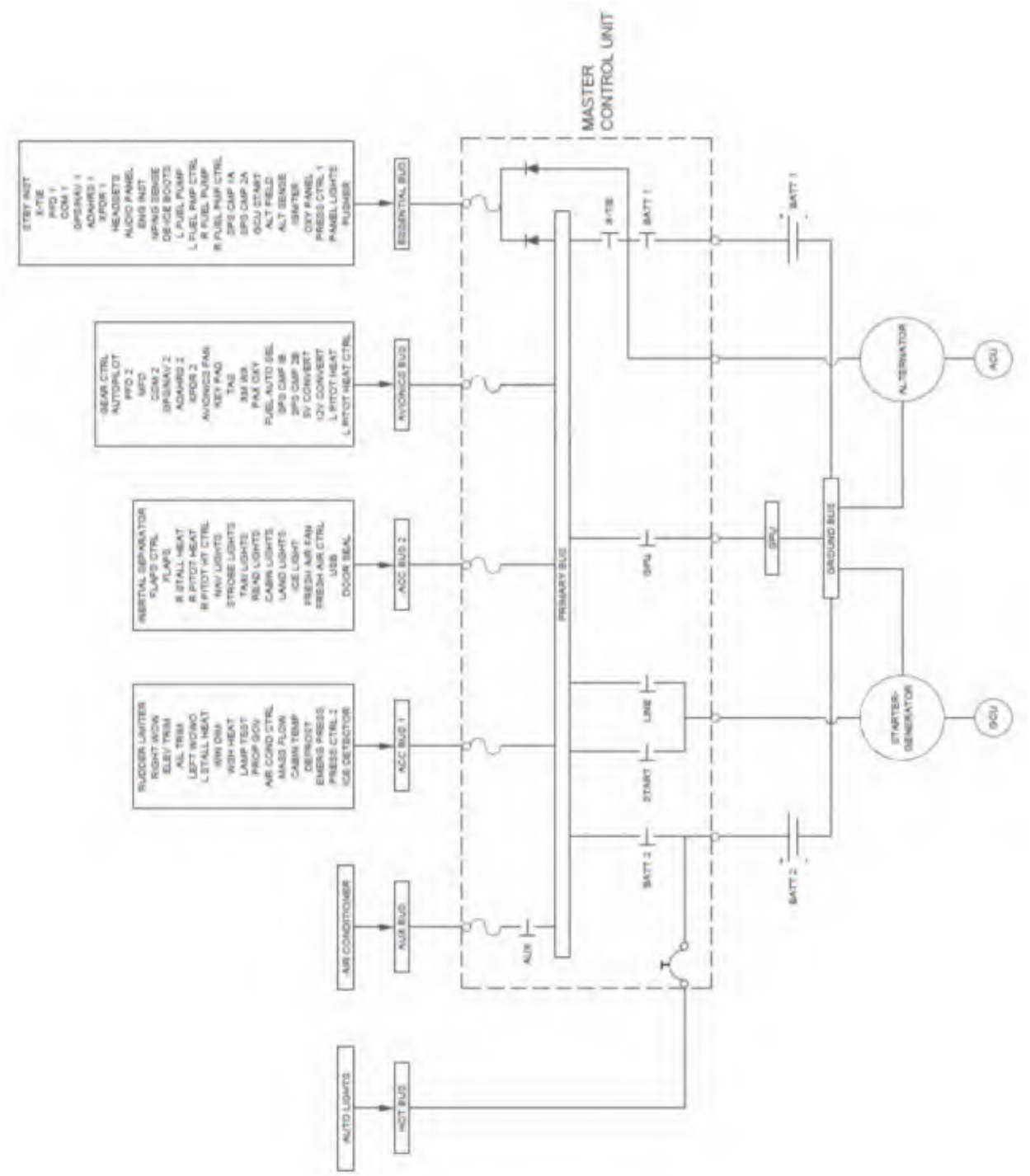

B. Electrical System Block Diagram (K014, K086 and On)

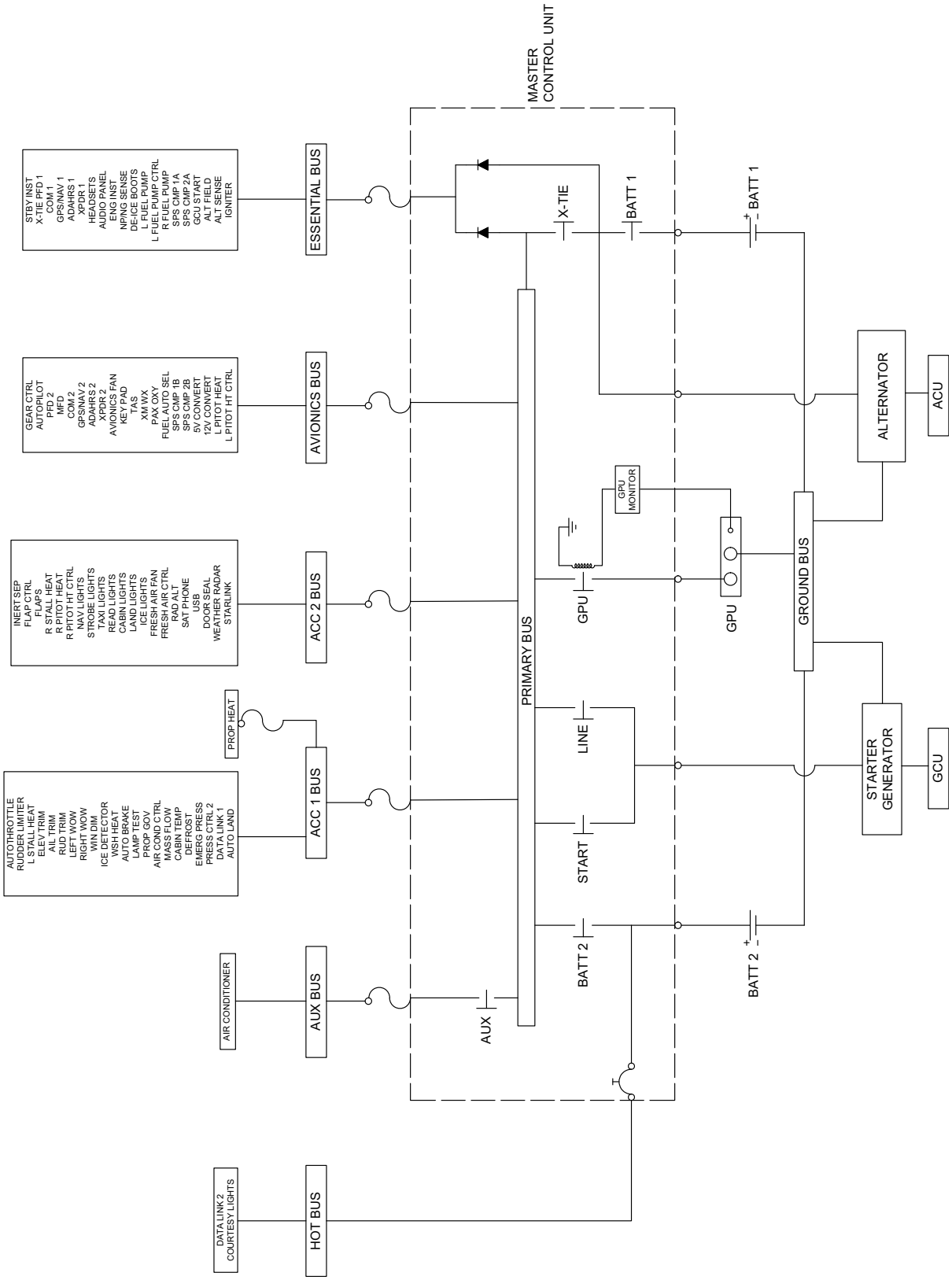

C. Main Aircraft Batteries (K003-K085, Except K014)

On Serial numbers K003-K085 (excluding K014), the two main aircraft batteries are 24-volt recombinant gas valve regulated lead-acid aircraft batteries designed for engine starting and emergency power and are manufactured by Concorde Battery Corporation. Each battery consists of twelve 2-volt cells connected in series and are constructed of a one-piece plastic container and cover which are secured together with an epoxy cement. The container and cover are made of high-impact polypropylene. The battery hold-down attachment points and handle assembly are incorporated into the cover. The electrolyte is a sulfuric acid and water solution and is absorbed within the battery plates and separators. There is no free electrolyte.

D. Main Aircraft Batteries (K014, K086 and On)

On Serial numbers K014, K086 and on, the two main aircraft batteries are 24-volt (20amp hour) Lithium-ion aircraft battery modules manufactured by True Blue Power. Each battery module consists of thirty-two (32) cells arranged as eight (8) groups of four (4) parallel cells, connected in series. The cells are connected with welded bus bars which contain an individual fuse for each cell in the module. Each module contains multiple temperature monitors and an integrated heater that improves cold weather performance. Additional components in the unit include a Battery Management System (BMS) microprocessor for battery data and fault monitoring, and independent resistance temperature detectors that produce analog electrical signals for redundant temperature monitoring. The battery module also has a primary 2-pin, industry standard mil-spec quick disconnect power receptacle, an 18-pin circular communications connector, and a threaded grounding location located on the front of the battery. The lid of the enclosure includes two hold-down features on either side to support typical aircraft mounting. A handle integrated into the lid of the enclosure provides ease of lifting and carrying for installation, removal and transport. The 1.25-inch diameter vent port can be located on either the front or left side of the unit for an exhaust connection that directs any released emissions appropriately.

E. Electrical Power Generation

The electrical system for the Epic E1000 airplane is a 28 Volt Direct Current system, and is comprised of the following:

(1) Master Control Unit
(2) Starter/Generator
(3) Generator Control Unit
(4) Standby Alternator
(5) Ground Power Module

The means of electrical power generation is by a Skurka 300-ampere starter generator, a Generator Control Unit, and a 41-amp standby direct driven alternator manufactured by B & C Specialties.

(a) Master Control Unit

The Master Control Unit (MCU) provides power distribution. Housed within the unit are contactors, fuses, circuit breakers, copper buses, protection diodes, and blocking diodes. Power distribution for aircraft systems consists of the Essential Bus, Avionics Bus, Auxiliary Bus, and Accessory Buses #1 and #2. A Hot Bus is available for up to 5 amps of power for "keep-alive" purposes. Systems and avionics are distributed between the Essential Bus and the Avionics Bus. The Essential Bus always receives power and in the following conditions:

(i) Battery 1 and Battery 2 power

(ii) Either Battery 1 or Battery 2 power

(iii) Battery power and generator power after engine start and changeover

(iv) Battery power and alternator power in generator failure

(v) Battery 1 power and Battery 2 power in generator and alternator failure

(b) Starter-generator

The electrical generation system is supplied by a 300-ampere direct drive starter-generator produced by Skurka Aerospace. The starter-generator is controlled by a Generator Control Unit (GCU) and produced by Skurka Aerospace. It is driven by one of the accessory drive ports on the Pratt & Whitney PT6 engine.

(c) Standby Alternator

Stand-by backup power is delivered by a 41-ampere direct-drive alternator produced by B&C Specialties in case the voltage drops below 27.5 volts. It is driven by one of the accessory drive ports on the Pratt & Whitney PT6 engine. The Alternator Control Unit (ACU) is housed independently to provide separation between power generation sources and to deliver backup power in case of generator failure. The alternator and the ACU have been approved for installation in certified aircraft.

(d) Ground Power Module

The airplane can receive power on the ground through an external ground power receptacle. Ground power is monitored for proper voltage polarity and overvoltage conditions by the MCU and the Ground Power Module. Ground power is used when the generator is not providing power and for engine starting.

F. Electrical Power Distribution

Electrical power is distributed by means of circuit protective devices, switches, buses, and electrical cables and equipment. Initiation of power to the airplane is implemented by master switches on the main electrical panel.

(a) Essential Bus

The essential bus comprises individual circuits for essential equipment. All circuits are protected by resettable circuit breakers. Required flight and navigation instruments, engine instruments, fuel flow and quantity instruments, cabin pressure instruments, and integrated flight displays are powered from the essential bus.

(b) Avionics Bus

Secondary avionics displays and redundant equipment is powered from the avionics bus. This bus is dedicated to systems and equipment that is closely second in importance to the essential bus, but their loss will not create additional workload to the flight crew.

(c) Auxiliary Bus

The air conditioning system is powered from the auxiliary bus. In case of generator failure, the air conditioning system is disabled. All wiring is properly sized to accommodate the electrical current to the air conditioning compressor, and all circuits are protected by circuit breakers from this bus.

(d) Accessory Buses #1 and #2

Less important equipment than essential and avionic is powered from the accessory buses. As with all other buses, all circuits are protected with resettable circuit breakers.

(e) Electrical Harnesses

Within the aircraft are various harnesses that distribute power to individual controls or systems.

2. Troubleshooting

Problem	Probable Cause	Solution
No Starter Generator output	Loose wire connection	Tighten wiring connection
	Starter Gen switch is OFF	Press Starter Gen switch ON
	GCU START circuit breaker out	Push GCU START circuit breaker in
	Starter Gen switch faulty	Replace Starter Gen switch (refer to Chapter 24-60.2.B.)
	Start switch faulty	Replace Start switch (refer to Chapter 24-60.2.B.)
	GCU faulty	Replace GCU (refer to Chapter 24-30.2.G.)
	Starter Generator faulty	Replace Starter Generator (Refer to Chapter 24-30.2.E)

Problem	Probable Cause	Solution
No Standby Alternator Output	Loose wire connection	Tighten wiring connection
	STBY ALTN switch is OFF	Press STBY ALTN switch ON
	Fuse F6 in MCU open	Replace MCU or fuse (refer to Chapter 24-30.2.C.)
	Standby Alternator faulty	Replace Standby Alternator (Refer to Chapter 24-30.2.F.)
Starter Generator and/or Standby Alternator output is low	Starter Generator faulty	Replace Starter Generator (Refer to Chapter 24-30.2.E)
	Standby Alternator faulty	Replace Standby Alternator (Refer to Chapter 24-30.2.F.)
Airplane power remains on after BATT 1 switch set to OFF	Batt 1 or Batt 2 Contactor failed closed	Replace MCU
No battery output	Poor battery connections	Clean and tighten connections
	BATT 1 and BATT 2 switch is OFF	Push BATT 1 switch ON
	BATT 1 and BATT 2 circuit breaker open	Reset circuit breaker and troubleshoot circuit
	BATT 1 and BATT 2 switch faulty	Replace BATT 1 and BATT 2 switch (refer to Chapter 24-60.2. B.)
	BATT 1 and 2 MCU contactor is faulty	Replace MCU (refer to Chapter 24-30.2.C.)
Battery will not hold charge	Loose connections, or corrosion	Tighten, clean, and neutralize connections.
	Battery faulty.	Replace battery 1 (refer to Chapter 24-60.2.A.)
		Replace battery 2 (refer to Chapter 24-60.2.B.)
	Exposed to hot climate for too long without operation.	Replace battery 1 (refer to Chapter 24-60.2.A.)
		Replace battery 2. (refer to Chapter 24-60.2.B.)

Problem	Probable Cause	Solution
External power receptacle inoperable.	BATT 1 switch not ON.	Push BATT 1 switch ON
	Faulty ground wire or connection.	Inspect and repair ground wire/connection at receptacle or firewall ground bus bar.
	Loose connections, or corrosion.	Tighten, clean, and neutralize connections.
	Ground power contactor faulty.	Replace MCU (refer to Chapter 24-30.2.C.)
	GPU Monitor is faulty	Replace MCU (refer to Chapter 24-30.2.C.)
BATT VOLTS LO Warning CAS displays	Battery left in cold environment	Charge with Ground Power Unit (GPU)
	Flight too short to recharge sufficiently.	Charge with Ground Power Unit (GPU)
	Power left on without Ground Power	Charge with Ground Power Unit (GPU)
	GCU Faulty	Replace GCU (refer to Chapter 24-30.2.C.)
	Starter Generator is faulty	Replace GCU
Starter Generator and/or Standby Alternator is noisy	Worn bearings.	Replace starter/generator. (Refer to Chapter 24-30.2.E.)
		Replace standby alternator (Refer to Chapter 24-30.2.F.)
No output from Standby Alternator	Loose wire connection.	Tighten wire connector
	Standby alternator faulty	Replace standby alternator (Refer to Chapter 24-30.2.F.)
	Alternator control unit faulty	Replace alternator control unit. (Refer to Chapter 24-30.2.H.)
Standby Alternator output is low	Loose generator wire connection.	Tighten connector.
	Alternator control unit faulty.	Replace alternator control unit. (Refer to Chapter 24-30.2.H.)

Problem	Probable Cause	Solution
Oil leaks from Standby Alternator	Oil seal in alternator faulty.	Replace standby alternator (Refer to Chapter 24-30.2.F.)
Starter Generator will not engage	GCU START circuit breaker is open.	Reset GCU START circuit breaker and troubleshoot circuit.
	Loose electrical connections.	Ensure all electrical connections between START GEN switch, GCU, and START switch are secure.

A. Main Electrical Power Check

The following procedure is for verifying battery power and ground power. Voltage indication is shown on the Multi-Function Display (MFD).

(1) Verify Battery Power and Power Buses

(a) Remove the top cowling (refer to Chapter 71-10).

(b) Ensure all the circuit breakers on the Master Control Unit (MCU) are IN.

(c) Begin with a ground power unit disconnected and all cabin mounted circuit breakers OUT.

(d) Push the BATT 1 Switch IN (ON). Verify no systems turn on.

(e) Push the PANEL LIGHTS circuit breaker IN. Verify the BATT 1 switch illuminates “ON”. This validates power on the ESSENTIAL BUS.

(f) Push the AVIONICS FAN circuit breaker IN. Verify the avionics fan does not turn on. This validates there is no power on the AVIONICS BUS and the diode and x-tie isolation are correct.

(g) Push the LAMP TEST circuit breaker IN. Push the LAMP TEST switch. Verify that only the BATT 1 ON light is illuminated. This validates there is no power on the ACC 1 BUS and the diode and x-tie isolation are correct.

(h) Push the STROBE LIGHTS circuit breaker IN. Push the STROBE switch IN. Verify that the strobe lights do not turn on. This validates there is no power to the ACC 2 BUS and the diode and X-tie isolation are correct.

(i) Push the STROBE switch OUT.

(j) Push the X-TIE circuit breaker IN. Verify the avionics fan turns on. This indicates there is power on the AVIONICS BUS.

(k) Push the LAMP TEST switch. Verify that all switch panel ON lights illuminate. This indicates there is power on the ACC 1 BUS.

(l) Push the STROBE switch IN. Verify the strobe lights turn on. This indicates there is power on the ACC 2 BUS.

(m) Push the STROBE switch OUT.

(n) Pull the X-TIE circuit breaker OUT. The avionics fan should turn off.

(o) Push the BATT 2 switch IN followed by pushing the BATT 1 switch OUT. Verify that the switch panel lights remain on and the avionics fan turns on. This indicates there is power on the ESSENTIAL BUS and the AVIONICS BUS.

(p) Push the LAMP TEST switch. Verify that all switch panel ON lights illuminate. This indicates power on the ACC 1 BUS.

(q) Push the STROBE switch IN. Verify the strobe lights turn on. This indicates power on the ACC 2 BUS.

(r) Push the STROBE switch OUT.

(s) Turn off the airplane power by pushing the BATT 2 switch OUT.

(t) Connect a ground power unit to the airplane (refer to Chapter 24-40).

(2) Display and Initial System Checks

The Primary Flight Displays (PFD) and the Multi-Function Display (MFD) are used for indication of several systems covered in later sections. The following steps verify correct function of the displays and the circuit breakers controlling power to the displays and supporting equipment.

(i) Verify PFD1, GIA1, GEA, GPU, and Reversionary Mode Verify the X-TIE circuit breaker is OUT.

(ii) Turn airplane power ON by pushing the BATT 1 switch followed by the BATT 2 switch.

(iii) Push the PFD 1 circuit breaker IN. Verify the pilot side PFD powers on. All indications should flag invalid with large X's across the indications.

(iv) The PFD should be in reversionary mode. Verify that engine parameter fields are present but that they have X's across the indications.

(v) Push the GPS/NAV 1 circuit breaker IN. Verify the NAV1 field is valid.

(vi) Push the COM 1 circuit breaker IN. Verify the COM1 field is valid.

(vii) Push the ENG INST circuit breaker IN. Verify the engine instrument fields are valid.

(viii) Verify that approximately 24V is indicated for BATT 1.

(ix) Verify that indicated voltage on BATT 2 is greater than 24V and less than 30V (validates the ground power connection).

Note: This indicated voltage is dependent on the ground power unit. If discrepant verify the ground power unit is properly set.

(x) Push the X-TIE circuit breaker IN. Verify that approximately 28V is indicated at BATT 1.

(xi) Verify PFD2, MFD, GIA2, and the GCU.

(xii) Push the PFD2 circuit breaker IN. Verify the co-pilot side PFD powers on.

(xiii) Push the MFD circuit Breaker IN. Verify the MFD powers on.

(xiv) Push the KEYPAD circuit breaker IN. Verify the keypad interface is active.

(xv) Push the GPS/NAV 2 circuit breaker IN. Verify the NAV2 field is valid.

(xvi) Push COM 2 circuit breaker IN. Verify the COM 2 field is valid.

(xvii) Push the ADAHRS 1 circuit breaker IN. Check that altitude, airspeed, vertical speed, true airspeed (TAS), and outside air temperature (OAT) fields are valid on the pilot side PFD.

(xviii) Push the ADAHRS 2 circuit breaker IN. Check that altitude, airspeed, vertical speed, true airspeed (TAS), and outside air temperature (OAT) fields are valid on the co-pilot side PFD.

(xix) Push the DISPLAY BACKUP Switch. Verify that all displays enter reversionary mode. All displays should have valid altitude, airspeed, vertical speed, and engine instruments.

(xx) De-activate reversionary mode by pushing the DISPLAY BACKUP Switch again.

B. Starter Generator

The airplane has a starter generator that is used for primary power generation and to turn the engine during starting. A Generator Control Unit (GCU) monitors and controls generator conditions. Test switches permit on the ground simulation of fault conditions and correct response.

(1) Generator Checkout Procedure

(a) With the engine running at greater than 75% Ng and the STBY ALTN set to off, verify the battery 1 and 2 voltages are 28.7 - 28.9 V on the MFD.

(b) Push the GEN TRIP switch on the test switch panel. The battery 1 and 2 voltages on the MFD should drop to the battery level (~24V). and the CAS message “GEN FAIL” should be displayed.

(c) Push the GEN RESET switch. The simulated failed condition is cleared and the voltage should show 28.7 - 28.9 V on the MFD and the CAS message “GEN FAIL” should extinguish.

(d) Push the OV TEST switch. This simulates an overvoltage condition. The voltage shown on the MFD should decrease to the battery level (~24V) and the CAS Message “GEN FAIL” should be displayed.

(e) Push the GEN RESET switch. The simulated failed condition is cleared, voltage shown should be 28.7 - 28.9 V on the MFD, and the CAS Message “GEN FAIL” should extinguish.

C. Standby Alternator

The airplane has a standby alternator to generate power if the generator fails.

(1) Do the following steps with the engine running at high idle with the ALT FIELD and ALT SENSE circuit breakers IN.

(2) Push the STDBY ALT switch. The switch should illuminate "ON"

(3) Push the GEN TRIP switch on the test switch panel. The CAS message “ALTERNATOR ON” should be displayed. The battery 1 and 2 voltage shown on the MFD should be 28.3 +/- 0.1v.

(4) Push the GEN RESET switch. The simulated failed condition is cleared and the voltage shown should be 28.7 - 28.9 V minimum. The “ALTERNATOR ON” CAS message should clear.

(5) Push the OV TEST switch. This simulates an overvoltage condition. The battery 1 and 2 voltage shown on the MFD should be 28.3 +/- 0.1v.

(6) Push the GEN RESET switch. The simulated failed condition is cleared and the voltage shown should be 28.7 - 28.9 V minimum. The “ALTERNATOR ON” CAS message should clear.

DC GENERATION

1. Description

When the engine is running, the starter/generator is the main source of power and is capable of supplying the full airplane electrical load. The generator is also the engine starter motor. If the STARTER GENERATOR switch is set to ON (enabled) and the START switch is actuated, the starter generator automatically switches between starter and generator depending on RPM.

Aircraft batteries:

Aircraft SN: K003 - K085 (except K014 have two Concorde RG-325 batteries rated at 25 amp-hours installed in parallel for engine starting and emergency power storage. These batteries are recombinant gas (RG) valve regulated lead acid (VRLA) batteries using absorbed glass mat (AGM) technology. They have non removable vent valves, are maintenance free, and the addition of electrolyte or water is not required.

Aircraft SN: K014, K086 and on have two 20 amp-hour True Blue TB20 series Lithium-Ion batteries. Each battery is rated 525A continuous, 560A up to 15 seconds, and 960A maximum (at engine start) output current.

The TB20 series batteries employ a battery management system comprised of three circuit boards, the Switch Board, Control Board and Battery Management System (BMS) board. The Switch board is responsible for enabling and disabling charging and discharging, protections based on internal monitoring such as current flow as well as current limiting charging. The Control Board is responsible for collecting cell parameters and reporting to the BMS Board. Additionally, it receives data from the BMS and provides that information to the Switch board to enable, limit, or disable charging and discharging.

The BMS Board is independent of the other modules and is responsible for managing the power control and external data interface of the battery. The BMS board employs a micro-controller with software to provide instructions to the control board and through it the switch board. The software logic monitors the battery functions and provides protection for conditions such as short circuit, over temperature, over-discharge, and others. Additionally, the BMS generates battery status and data that is provided to the aircraft through the 18-pin communication connector for cockpit monitoring. The status data is also provided to the built-in visual status indicator located on the battery itself.

The Master Control Unit (MCU) provides power distribution through a network of switches, relays and bus bars. Buses are energized by the flight deck crew using switches to activate specific buses. For example, when the Batt 1 switch is closed, the Batt 1 contactor closes to allow power from Battery 1 to enter the Primary Bus. This procedure provides power to all the secondary buses: Essential, Avionics, Accessory 1 and 2, and Auxiliary terminals on the MCU. Protection of the wires and systems is by non-resettable fuses on the bus terminals externally located on the MCU. This power is connected to the cabin through wiring connectors in the firewall and distributed to circuit breakers on the instrument panel.

2. Maintenance Practices

A. Batteries (SN: K003 - K085, Excluding K014)

(1) Right Battery Removal

WARNING: To reduce the possibility of personal injury and equipment damage, disconnect the negative battery cable before disconnecting the positive battery cable.

(a) Verify the BATT 1 and BATT 2 switches are set to off.

(b) Disconnect external electrical power from the airplane (refer to Chapter 24-40).

(c) Remove the cowling (refer to Chapter 71-10).

(d) Remove the Master Control Unit (MCU) (refer to 24-30).

(e) Disconnect the P3 and emergency pressure circuit hoses attached to the intercooler/heat exchanger assembly.

(f) Remove the bolts, washers, and locknuts attaching the right intercooler assembly to the engine mount then remove the right intercooler from the airplane.

(g) Remove the bolts and washers attaching the cover/inlet to the battery box then remove the cover/inlet.

(h) Disconnect the negative battery cable first then the positive battery cable.

(i) Insulate the battery terminals.

(j) Remove the battery retainer and chafe guard then remove the battery from the airplane.

(2) Right Battery Installation

(a) Clean the outside surfaces of the battery with a lint free shop cloth that is clean, dry, and free of oil. If the battery has caked on dirt or grime, use a cloth dampened with tap water, then wipe dry.

(b) Put the battery into its battery box then secure it using the chafe guard and retainer. Torque the attachment hardware 25 to 30 in-lbs. Connect the battery cables to the correct terminals. Connect the positive cable first then the negative cable.

WARNING: To reduce the possibility of personal injury and equipment damage, connect the positive battery cable before connecting the negative battery cable.

CAUTION: Connecting the battery cables to the incorrect terminals can result in serious damage to the electrical system.

(c) Install the cover/inlet onto the battery box.

(d) Attach the intercooler to the engine mount using bolts, washers, and locknuts.

(e) Connect the P3 and emergency pressure circuit hoses to the intercooler/heat exchanger assembly.

(f) Install the MCU (refer to 24-30).

(g) Install the cowling (refer to Chapter 71-10).

(h) Set the BATT 2 switch to ON.

(i) Make sure BATT 2 voltage is present on the MFD.

(j) Set the BATT 2 switch to off.

(3) Left Battery Removal

WARNING: To reduce the possibility of personal injury and equipment damage, disconnect the negative battery cable before disconnecting the positive battery cable.

(a) Verify the BATT 1 and BATT 2 switches are set to OFF.

(b) Disconnect external electrical power from the airplane (refer to Chapter 24-40).

(c) Remove the cowling (refer to Chapter 71-10).

(d) Disconnect the wiring harness from the temperature control valve and the mass flow sensor.

(e) At the emergency pressure circuit outlet, disconnect the hose routed from the distribution duct.

(f) At the mass flow sensor flow tube, disconnect the hose routed from the manifold tube.

(g) At the temperature control valve, disconnect the hose routed from the jet pump.

(h) Remove the bolts, washers, and locknuts attaching the three loop clamps attaching the mass flow sensor flow tube to the engine mount.

(i) Remove the bolts, washers, and locknuts attaching the intercooler/heat exchanger assembly to the engine mount.

(j) Remove the intercooler/heat exchanger assembly with associated hoses from the airplane.

Note: The temperature control valve is attached to the intercooler/heat exchanger assembly and does not need to be removed before removal of the intercooler/heat exchanger assembly.

(k) Remove the bolts and washers attaching the cover/inlet to the battery box then remove the cover/inlet.

(l) Disconnect the negative battery cable first then the positive battery cable.

(m) Insulate the battery terminals.

(n) Remove the battery retainer and chafe guard then remove the battery from the airplane.

(4) Left Battery Installation

(a) Clean the outside surfaces of the battery with a lint free shop cloth that is clean, dry, and free of oil. If the battery has caked on dirt or grime, use a cloth dampened with tap water, then wipe dry.

(b) Put the battery into its battery box then secure it using the chafe guard and retainer. Torque the attachment hardware 25 to 30 in-lbs.

(c) Connect the battery cables to the correct terminals. Connect the positive cable first then the negative cable.

WARNING: To reduce the possibility of personal injury and equipment damage, connect the positive battery cable before connecting the negative battery cable.

CAUTION: Connecting the battery cables to the incorrect terminals can result in serious damage to the electrical system.

(d) Install the cover/inlet onto the battery box.

(e) Attach the intercooler/heat exchanger assembly to the engine mount using bolts, washers, and locknuts.

(f) Attach the three loop clamps attaching the mass flow sensor flow tube to the engine mount using bolts, washers, and locknuts.

(g) At the emergency pressure circuit outlet, connect the hose routed from the distribution duct.

(h) At the temperature control valve, connect the hose routed from the jet pump.

(i) At the mass flow sensor flow tube, connect the hose routed from the manifold tube.

(j) Connect the wiring harness to the temperature control valve and the mass flow sensor.

(k) Install the cowling (refer to Chapter 71-10).

(l) Set the BATT 1 switch to ON.

(m) Make sure BATT 1 voltage is present on the MFD.

(n) Set the BATT 1 switch to off.

(5) Battery Charging

(a) Remove the cowling (refer to Chapter 71-10).

Note: Battery removal is not required. Connect the battery charging equipment to the left negative (T599) and positive (T427) terminal leads, or right negative (T598) and positive (T428) terminal leads.

(b) Disconnect the left battery negative terminal (T599) and/or right battery negative terminal (T598) from the engine mount.

(c) Disconnect the left battery positive terminal (T427) and/or right battery positive terminal (T428) from the MCU.

(d) Connect a cooling air source to the left battery cooling duct. A heat gun or hair dryer on the cool setting is recommended.

(e) Do the procedure to charge the left battery (refer to the latest revision of the Concorde Battery Corporation RG Series Main Aircraft Battery Component Maintenance Manual, P/N 5-0171).

(f) Connect the left battery positive terminal (T427) and/or right battery positive terminal (T428) to the MCU. Torque the nut to 45 - 55 in-lbs.

(g) Connect the left battery negative terminal (T599) and/or right battery negative terminal (T598) to the engine mount. Torque the nut to 160 - 190in-lbs.

(h) Install the cowling (refer to Chapter 71-10).

(6) Battery Capacity Test and Conditioning Charge

(a) Remove the cowling (refer to Chapter 71-10).

Note: Battery removal is not required. Connect the battery test equipment to the left negative (T599) and positive (T427) terminal leads, or right negative (T598) and positive (T428) terminal leads.

(b) Disconnect the left battery negative terminal (T599) and/or right battery negative terminal (T598) from the engine mount.

(c) Disconnect the left battery positive terminal (T427) and/or right battery positive terminal (T428) from the MCU.

CAUTION: Make sure to monitor the testing procedure. An overheated battery could damage system components and surrounding structure.

(d) Connect a cooling air source to the left battery cooling duct. A heat gun or hair dryer on the cool setting is recommended.

(e) Perform the capacity test the left battery (refer to the latest revision of the Concorde Battery Corporation RG Series Main Aircraft Battery Component Maintenance Manual, P/N 5-0171).

(f) Connect the left battery positive terminal (T427) and/or right battery positive terminal (T428) to the MCU. Torque the nut to 45 - 55 in-lbs.

(g) Connect the left battery negative terminal (T599) and/or right battery negative terminal (T598) to the engine mount. Torque the nut to 160 - 190in-lbs.

(h) Install the cowling (refer to Chapter 71-10).

Figure 24-30.1: Battery Installation (Sheet 1 of 3)

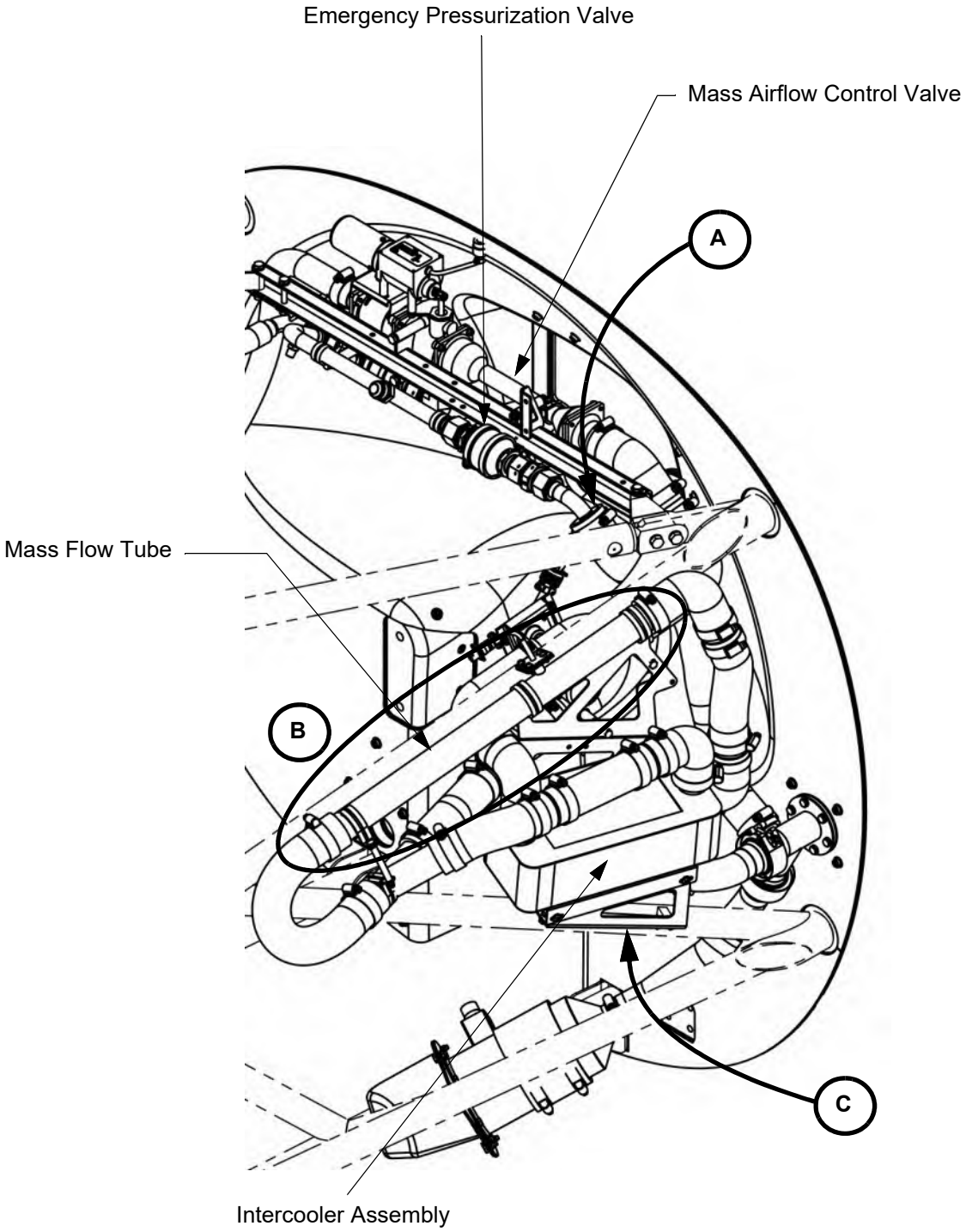

Figure 24-30.1: Battery Installation (Sheet 2 of 3)

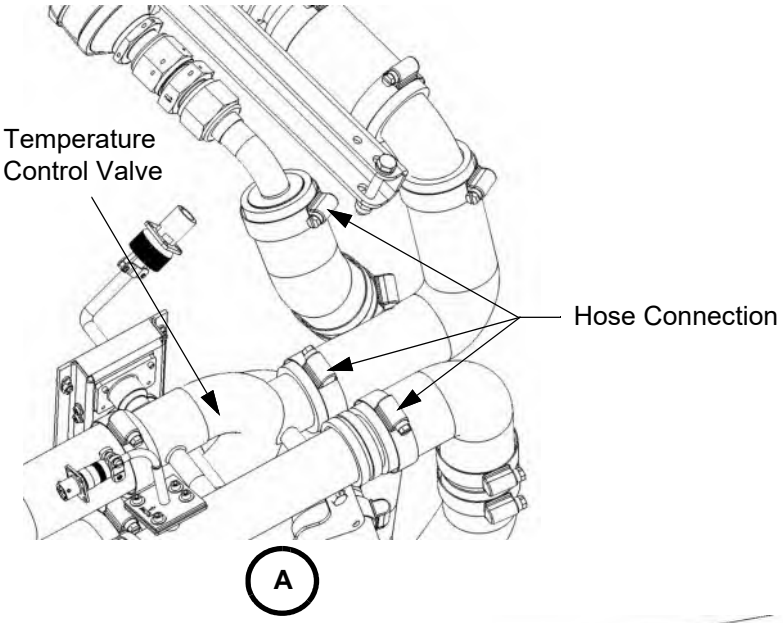

LEGEND

1. Bolt
2. Washer
3. Locknut

A

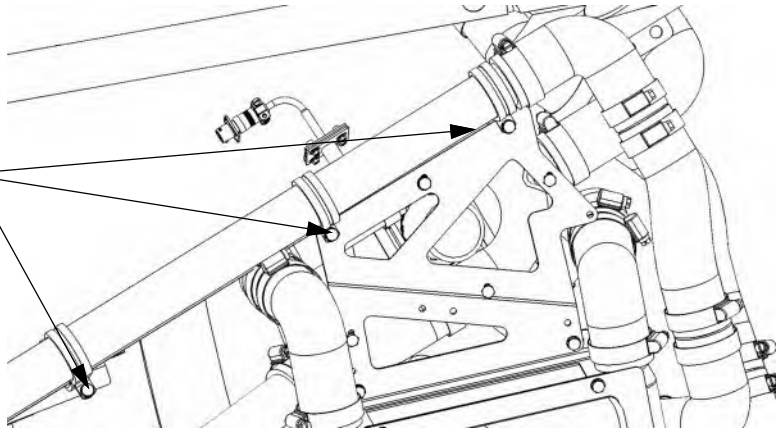

B

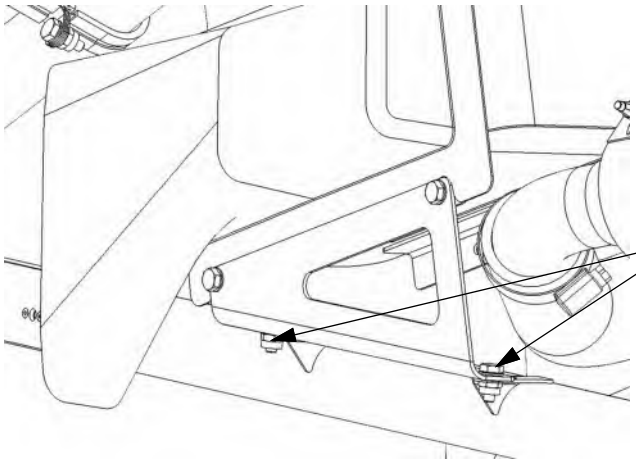

C

Figure 24-30.1: Battery Installation (Sheet 3 of 3)

LEGEND

1. Battery Box, Left
2. Battery Box, Right
3. Battery
4. Top, Right
5. Top, Left
6. Inlet Lid, Right
7. Inlet Lid, Left
8. Chafe Guard
9. Retainer
10. Bolt
11. Washer
12. Locknut
13. Grommet

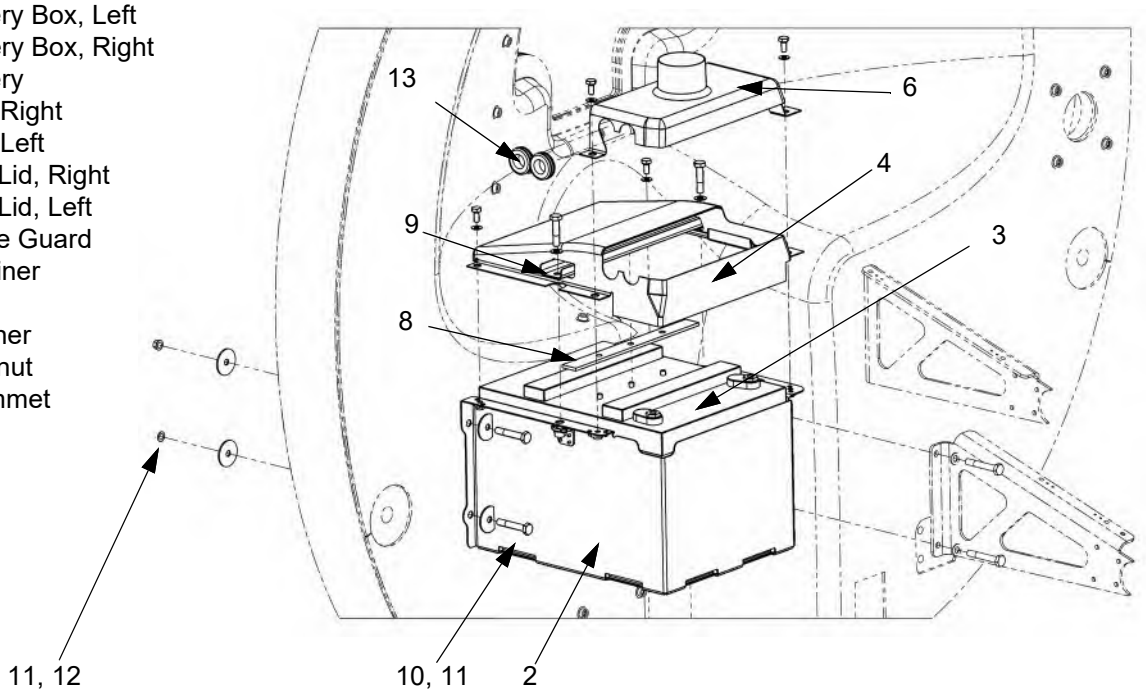

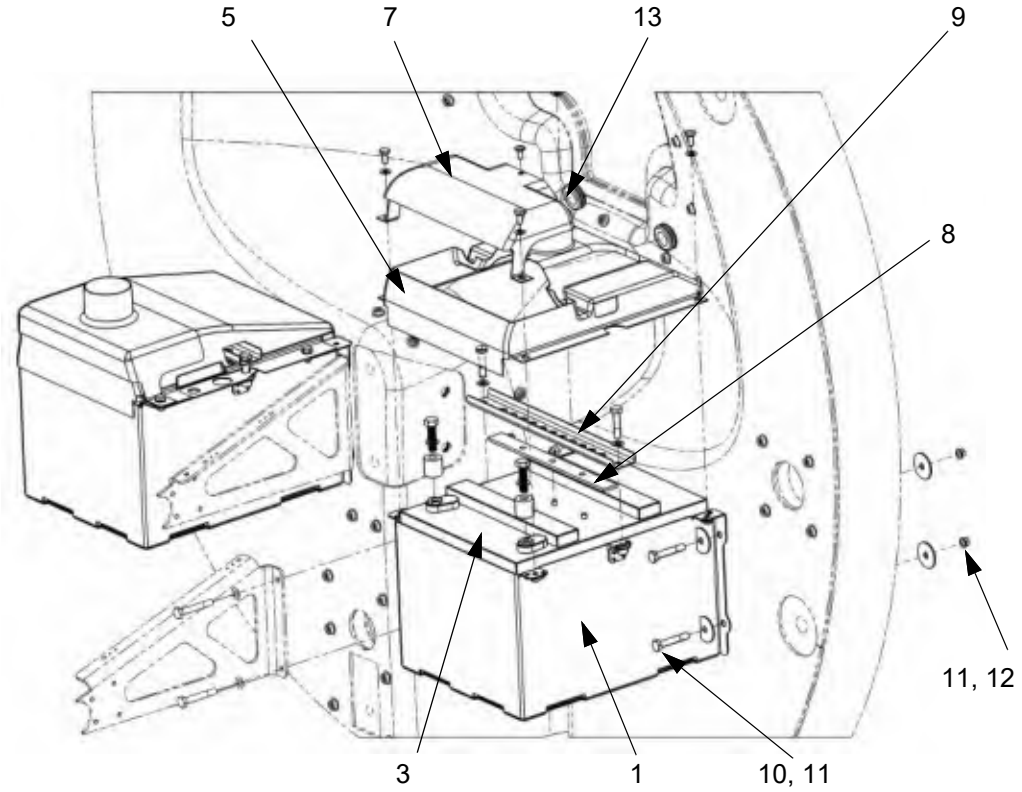

B. Batteries (SN: K014, K086 and On)

Extreme care and caution should be applied when handling and connecting to the unit. Danger of short circuit and subsequent arc flash, electrical burns or equipment damage can occur if not handled properly.

(1) Battery Removal

WARNING: DO NOT SHORT BATTERY TERMINALS AT ANY TIME

(a) Remove the cowling (refer to Chapter 71-10).

(b) Left Battery (refer to Figure 24-30.2, sheets 1, 2, 4, 5, 6):

(i) Access the left battery as follows:

(1) Disconnect the electrical connectors from the temperature control valve (P328) and the mass flow sensor (P326).

(2) Remove the hose clamp that attaches the hose to the mass airflow valve, and disconnect the hose from the valve.

(3) Disconnect the v-band clamp that connects the mass air tube to the bulkhead fitting.

(4) Remove the bolts, washers, and nuts that attach the lower intercooler bracket to the engine mount.

(5) While supporting the intercooler, remove the bolts, washers, and nuts that attach the upper intercooler bracket and mass airflow tube cushioned clamps to the engine mount.

(6) Remove the mass air flow tube, temperature control valve, tubing, and intercooler as an assembly.

(7) Disconnect the b-nut at the emergency pressurization valve.

(8) Remove the hose clamp that attaches the emergency pressurization hose to the bulkhead fitting and disconnect the hose from the fitting and remove the hose assembly.

(ii) Remove the ignition exciter (refer to Chapter 74-10).

(iii) Remove the quick release pin that attaches the vent tube to the battery box then remove the vent tube.

(iv) Disconnect the battery quick disconnect from the bottom of the battery box.

(v) Disconnect electrical connector (P783) from the bottom of the battery box.

(vi) Remove the (13) bolts and washers that attach the battery box cover and hold down covers to the battery box.

(vii) Remove the nut, washer, lock washer, and screw that attach the ground wire to the battery box.

(viii) Remove the (4) bolts and washers that attach the exhaust plate to the battery box.

(ix) Carefully lift the battery assembly from the battery box.

(x) Disconnect the quick-disconnect from the battery.

(xi) Disconnect the electrical connector (P759) from the battery.

(xii) Remove the bolt that attaches the ground wires to the battery, remove the battery wire harness.
(xiii) Remove the screws that attach the vent tube to the battery and remove the vent tube.

(c) Right Battery (refer to Figure 24-30.2, sheets 1, 2, 3, 5, 6)):
(i) Remove the right intercooler (refer to Chapter 21-20).
(ii) Remove the MCU (refer to Chapter 24-30).
(iii) Disconnect the battery quick disconnect from the bottom of the battery box.
(iv) Remove the quick release pin that attaches the vent tube to the battery box then remove the vent tube.
(v) Disconnect electrical connector (P782) from the top of the battery box.
(vi) Remove the (13) bolts and washers that attach the battery box lid, hold down covers, and hydraulic line bracket to the battery box.
(vii) Carefully lift the lid to access the electrical connector.
(viii) Remove the nuts, washers, lock washers, and jack screws that attach the electrical connector (J872) to the battery box lid.
(ix) Remove the battery box lid.
(x) Remove the nut, washers, lockwashers, and screw that attach the ground wire to the battery box.
(xi) Remove the (4) bolts and washers that attach the exhaust plate to the battery box.
(xii) Carefully lift the battery assembly from the battery box.
(xiii) Disconnect the quick-disconnect from the battery.
(xiv) Disconnect electrical connector (P760) from the battery.
(xv) Remove the bolt that attaches the ground wires to the battery.
(xvi) Remove the screws that attach the vent tube to the battery and remove the vent tube.

(2) Battery Installation

WARNING: DO NOT SHORT BATTERY TERMINALS AT ANY TIME

Note: Install the same battery type, TB20 series True Blue Lithium-ion batteries.

(a) Carefully remove the battery from the shipping container (if applicable). The shipping container and packing are designed specifically for the transit of lithium batteries and approved by international transportation agencies. These materials should be retained for use should the unit require future shipment.
(b) Inspect the shipping container (if applicable) and battery for any signs of damage sustained in transit. If necessary, return the battery to the factory using the original shipping container and packing materials.
(c) If battery is new, perform Battery Configuration (refer to Chapter 24-30.2.B.4.A.
(d) Left Battery (refer to Figure 24-30.2, sheets 1, 2, 4, 5, 6)):
(i) Connect the electrical connector (P759) to the battery.

(ii) Attach the (2) ground wires to the battery with the bolt. Torque the bolt to 40 - 50 in-lbs.
(iii) Connect the battery quick disconnect to the battery.
(iv) Connect the vent tube to the battery with the (4) screws using Loctite 242. Torque the screws to 7 - 9 in-lbs.
(v) Carefully put the battery assembly in the battery box.
(vi) Install the ground wire on the battery case with the screw, lockwashers, washers and nuts. Torque the nut to 12 - 15 in-lbs.
(vii) Install the (4) bolts and washers that attach the exhaust plate to the battery box.
(viii) Install the stiffener washers and hold-down bolts. Torque the bolts to 50 - 70 in-lbs.
(ix) Install the battery box lid.
(x) Put the hold-down covers in position and install the (4) bolts and washers that attach the hold-down covers to the battery box. Torque the bolts to 20 - 25 in-lbs.
(xi) Install the remaining (9) bolts and washers that attach the lid to the battery box. Torque the bolts to 20 - 25 in-lbs.
(xii) Install the ignition exciter (refer to Chapter 74-10).
(xiii) Connect electrical connector (P783) to the bottom of the battery box.
(xiv) Connect the battery quick-disconnect to the battery box.
(xv) Install access items as follows:
(1) Install the emergency pressurization hose on the emergency pressurization valve and bulkhead fitting. Torque the b-nut to 900 - 1000 in-lbs and install safety wire. Torque the hose clamp to 25 - 30 in-lbs.
(2) Put the mass air flow tube, temperature control valve, tubing, intercooler assembly in position on the engine mount.
(3) While supporting the intercooler, install the bolts, washers, and nuts that attach the upper intercooler bracket and mass airflow tube cushioned clamps to the engine mount. Torque the nuts to 20 - 25 in-lbs.
(4) Install the bolts, washers, and nuts that attach the lower intercooler bracket to the engine mount. Torque the nuts to 20 - 25 in-lbs.
(5) Install the hose on the mass airflow valve and torque the hose clamp to 25 - 30 in-lbs.
(6) Connect the mass air tube to the bulkhead fitting and install the v-band clamp. Torque the v-band clamp to 31.5 - 38.5 in-lbs.
(7) Connect the electrical connectors to the temperature control valve (P328) and the mass flow sensor (P326).
(xvi) Do the Battery Diagnostics Check (refer to 24-30.2.B.4.b).
(xvii) Do the functional check of the ECS system (refer to 21-30.2.G) and leak check all affected fittings.

(e) Right Battery (refer to Figure 24-30.2, sheets 1, 2, 3, 5, 6)):
(i) Connect the electrical connector (P760) to the battery.
(ii) Attach the (2) ground wires to the battery with the bolt. Torque the bolt to 40 - 50 in-lbs.

(iii) Connect the battery quick disconnect to the battery.
(iv) Connect the vent tube to the battery with the (4) screws using Loctite 242. Torque the screws to 7 - 9 in-lbs.
(v) Carefully put the battery assembly in the battery box.
(vi) Install the (4) bolts that attach the exhaust plate to the battery box. Torque the bolts to 20 - 25 in-lbs.
(vii) Install the ground wire on the battery case with the screw, lockwashers, washers and nuts. Torque the nut to 12 - 15 in-lbs.
(viii) Put the lid in position over the battery box.
(ix) Put electrical connector (J782) in position on the battery box lid. Install the nuts, washers, lock washers, and jack screws that attach the electrical connector to the lid. Torque the nuts to 3.6 - 4.4 in-lbs.
(x) Put the lid on the battery box and put the hydraulic line bracket and hold down covers in position.
(xi) Install the (13) bolts and washers that attach the lid, hold-down covers, and hydraulic line bracket to the battery box. Torque the bolts to 20 - 25 in-lbs.
(xii) Connect electrical connector (P782) to the top of the battery box.
(xiii) Connect the battery quick-disconnect to the battery box.
(xiv) Install the MCU (refer to Chapter 24-30).
(xv) Install the right intercooler (refer to Chapter 21-20).
(xvi) Do the MCU Operational Check (refer to 24-30.2.C(3).
(xvii) Do a leak check of the right intercooler.
(xviii) Do the operational check of the battery (refer to 24-30.2.B).

(3) Battery Quick-Disconnect Adapter (refer to Figure 24-30.2, sheet 7):

(a) Disassembly

(i) Remove the hose clamps that attach the SCAT tubing to the battery vent tube and vent weldment. Remove the SCAT tubing.
(ii) Remove the screws (4 right battery), (3 left battery), that attach the battery box vent to the exhaust plate then remove vent.
(iii) Remove the (2) nylon cap nuts and terminal cover from the quick disconnect receptacle.
(iv) Remove the (2) nuts and lockwashers that attach the bus bars to the quick disconnect receptacle.
(v) Remove the (2) nuts and bolts that attach the backshell cap to the quick disconnect and remove the cap.
(vi) Remove the nuts and lockwashers that attach the bus bars to the quick disconnect, and remove the bus bars.
(vii) Left battery only, remove the nuts, washers, lock washers, and jack screws that attach the electrical connector (J783) to the exhaust plate, then remove the wire harness.
(viii) Remove the (4) screws that attach the quick disconnect receptacle to the exhaust plate, then remove the quick disconnect receptacle.

(b) Assembly

(i) Put the quick disconnect receptacle in position on the exhaust plate. Install the (4) screws that attach the quick disconnect receptacle to the exhaust plate. Torque the screws to 20 - 25 in-lbs.

(ii) Put the bus bars on the quick disconnect receptacle studs and install the lockwashers and nuts. Torque the nuts to 48 - 55 in-lbs.

(iii) Install the terminal cover and (2) nylon cap nuts on the quick disconnect receptacle. Torque the nylon cap nuts to 15 - 20 in-lbs.

(iv) Put the battery quick disconnect on the bus bars. Install the nuts and washers that attach the bus bars to the quick disconnect. Torque the nuts to 40 - 50 in-lbs.

(v) Put the backshell cap on the battery quick disconnect backshell. Install the bolts and nuts that attach the backshell cap to the backshell. Torque the nuts to 6 - 8 in-lbs.

(vi) Put the battery box vent on the exhaust plate and install the screws (4 right battery), (3 left battery). Torque the screws to 20 - 25 in-lbs.

(vii) Install the SCAT tube on the vent weldment and battery box vent. Install the hose clamps and torque to 30 - 45 in-lbs.

(4) Configuration/Adjustment/Check

(a) Battery Configuration

Note: Only to be performed on new batteries. Battery Configuration MUST be performed before batteries are assembled and installed in the aircraft.

(i) Obtain USB from pilot's flyaway kit
(ii) Ensure the battery is awake and in idle mode by first disconnecting from all chargers and components, then pressing the STATUS/SOC button on the front face of the battery.
(iii) Remove the USB access cover on the battery.
(iv) Insert the configured flash drive into the USB port on the battery.
(v) Press and hold the blue service button directly above the USB port until the service light changes from solid white to blinking white (approximately 3 seconds) and releasing before the flashing white stops (5 seconds)
(vi) While the battery is installing the configuration files the service light will transition to blinking yellow.
(vii) Once the configuration file is installed successfully, the service light will transition to solid green. If the install was unsuccessful, the service light will be solid red.
(viii) Remove the USB flash drive and the battery will reboot with the updated configuration file.
(ix) Replace USB access cover.

(5) Battery Diagnostics Check

(a) Verify all circuit breakers are in and system can power on
(b) Begin with the aircraft completely powered off
(c) Insert the SD card containing the files (.zip) and (.sff) in the top slot of the MFD
(d) Power on system in "Normal Mode".
(e) Using the FMS knob on the MFD, navigate to the OEM Diagnostics Tab. (OEM Diagnostics Tab should look like Figure 24-30.3)
(f) If end of life box is checked, replace battery.

Figure 24-30.2: Battery Diagnostics Screen



Figure 24-30.3: Battery Installation (Sheet 1 of 7)

LEGEND

1. Mass Airflow Sensor Electrical Connector
2. Temperature Control Valve Electrical Connector
3. Mass Airflow Valve
4. Bulkhead Fitting
5. V-Band Clamp
6. Lower Intercooler Bracket Hardware
7. Upper Intercooler Bracket Hardware
8. Emergency Pressurization Line
9. Emergency Pressurization B-Nut
10. Mass Airflow Tube

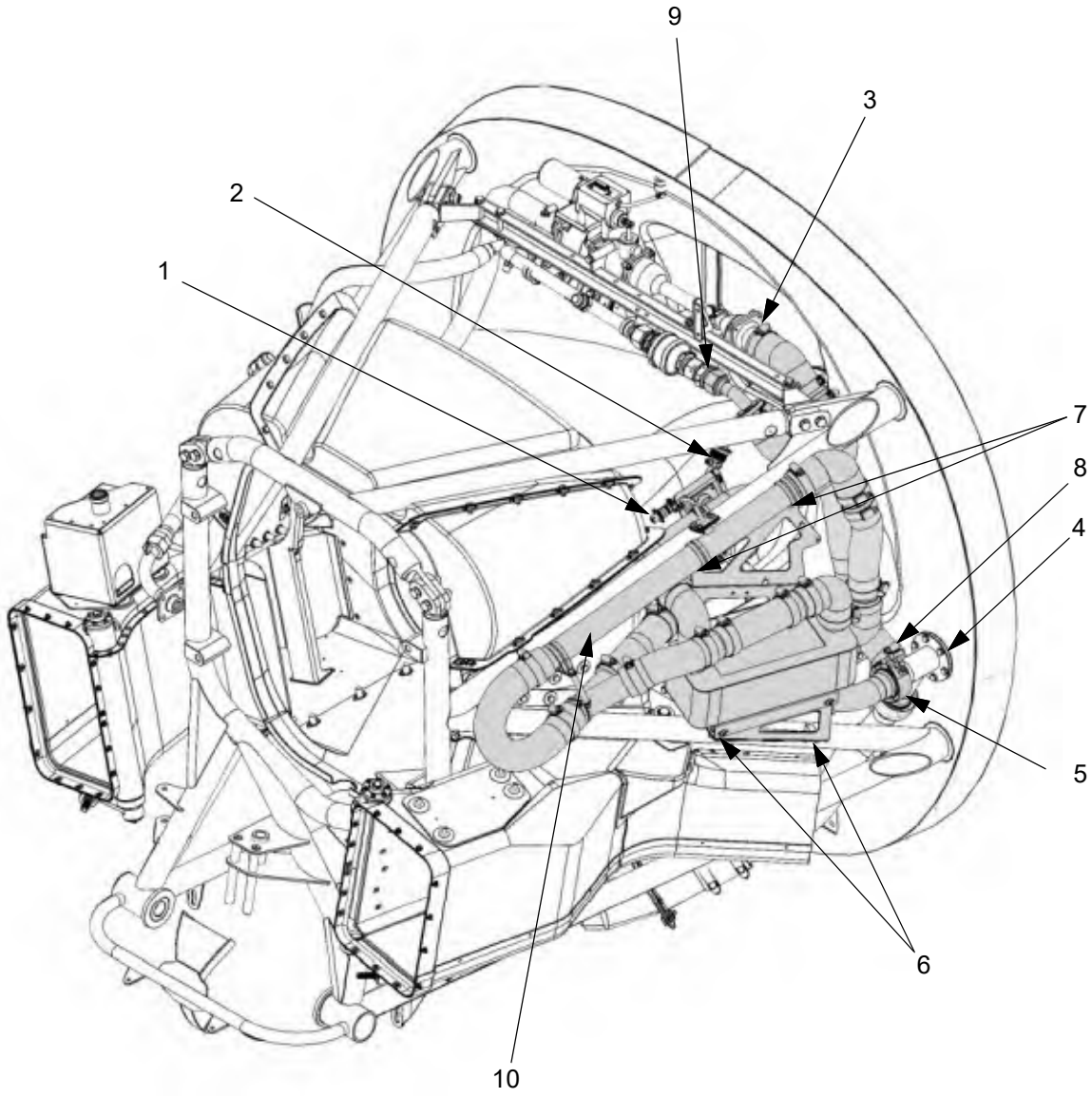

Items in gray removed for left battery access.

Figure 24-30.2: Battery Installation (Sheet 2 of 7)

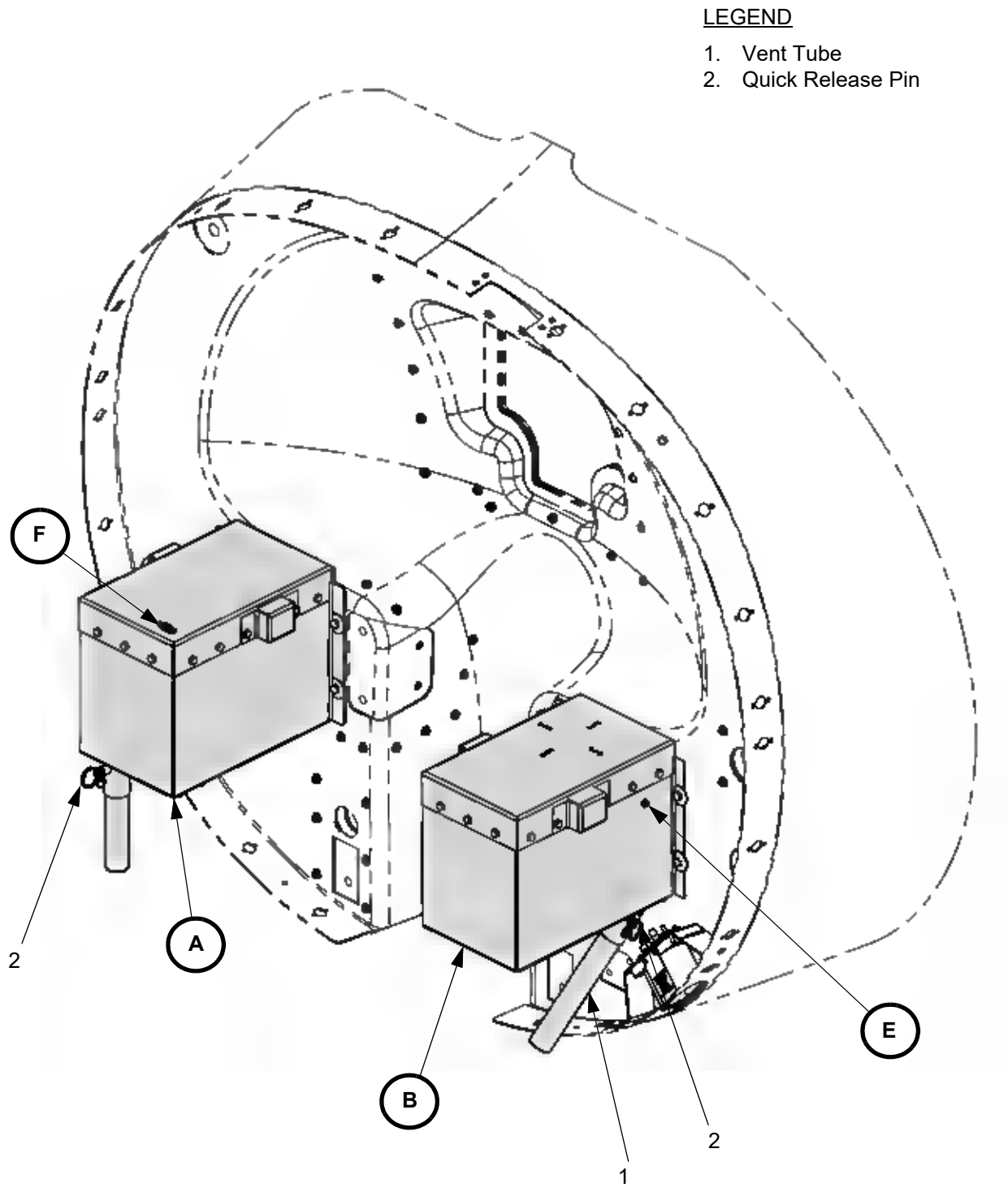

Figure 24-30.2: Battery Installation (Sheet 3 of 7)

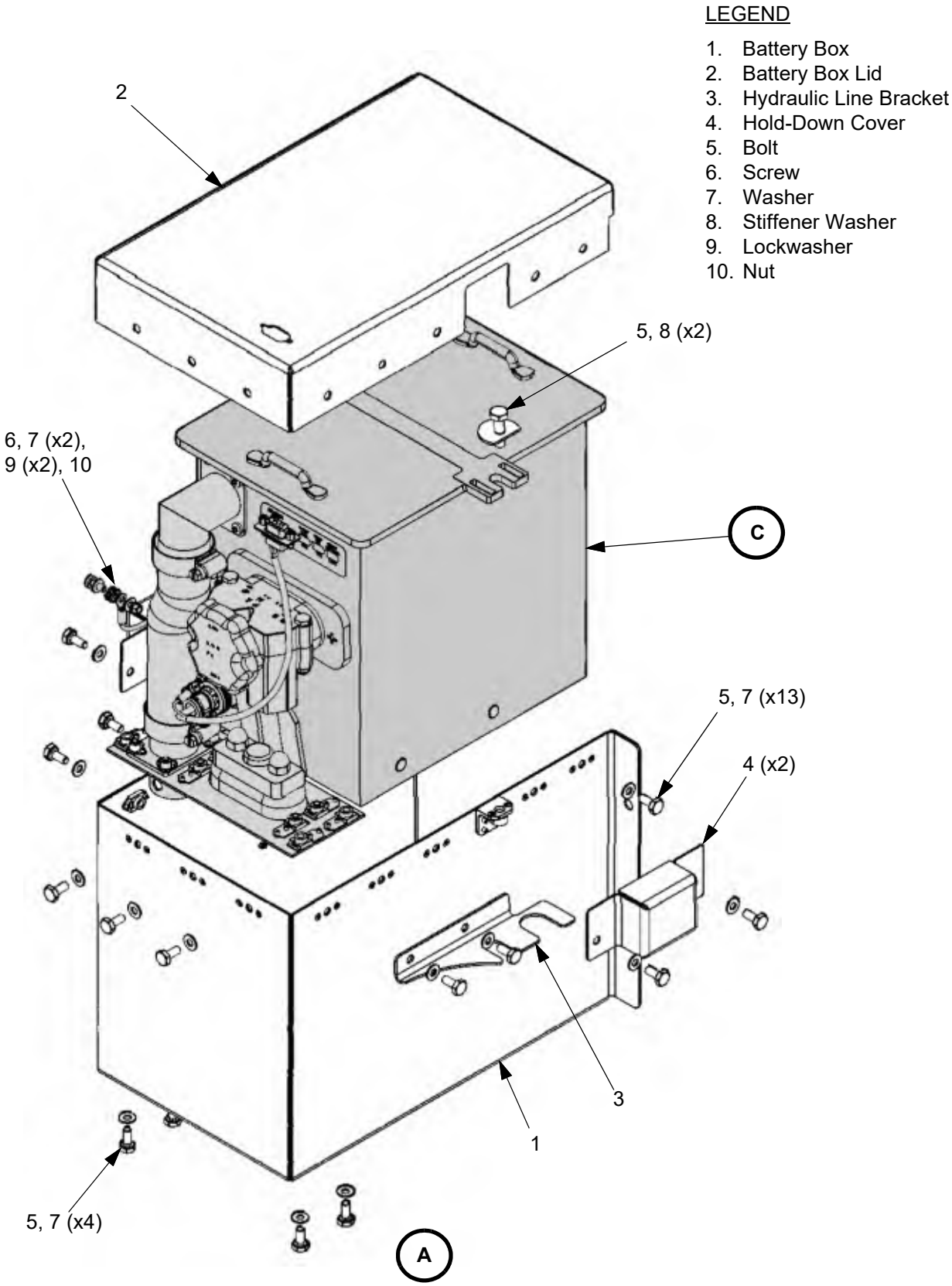

Figure 24-30.2: Battery Installation (Sheet 4 of 7)

LEGEND

1. Battery Box
2. Battery Box Lid
3. Ground Connection
4. Hold-Down Cover
5. Bolt
6. Washer
7. Stiffener Washer

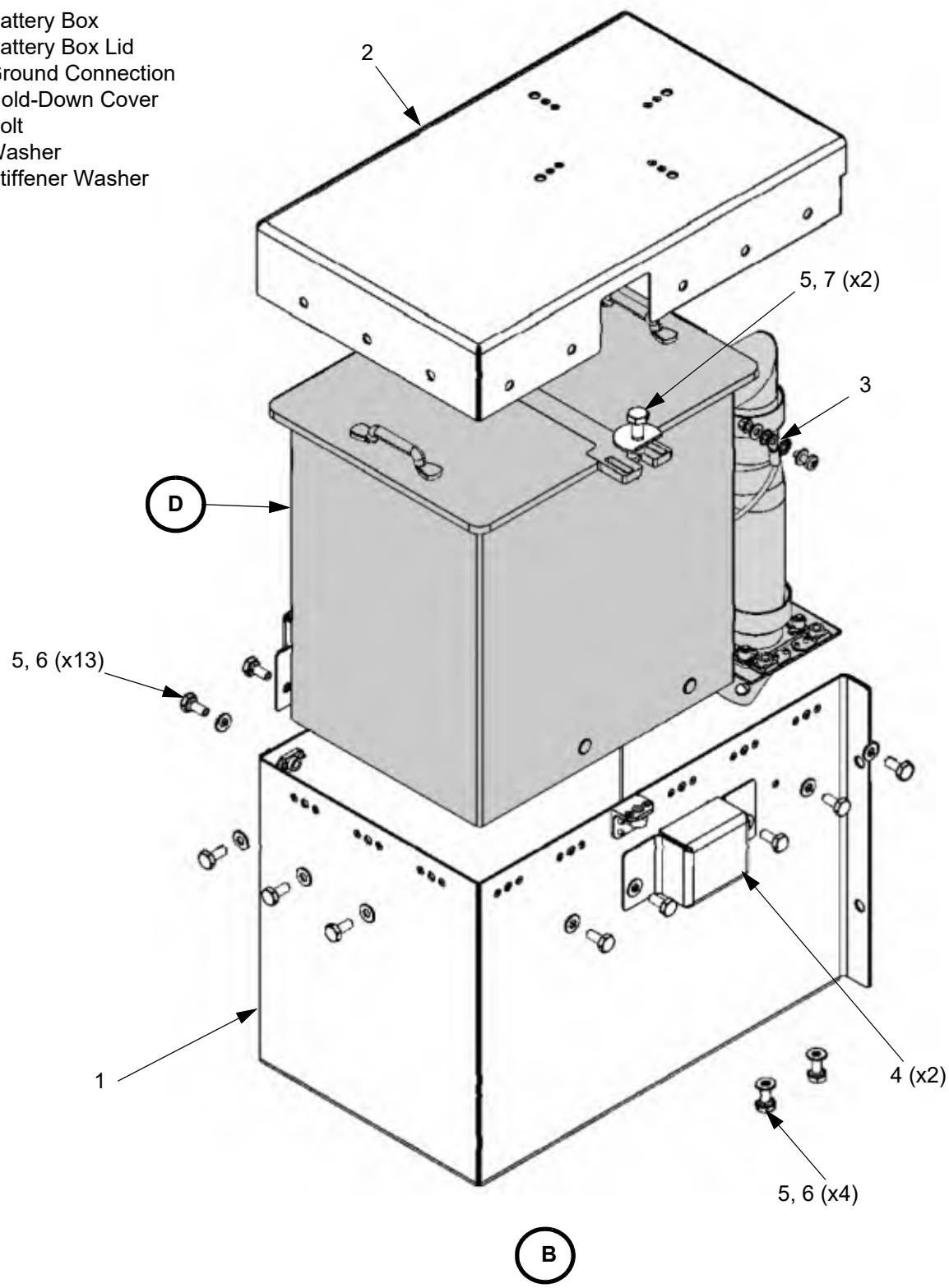

Figure 24-30.2: Battery Installation (Sheet 5 of 7)

LEGEND

1. True Blue TB20 Battery
2. Battery Quick Disconnect
3. Electrical Connector
4. Screw
5. Bolt (Ground Wire)

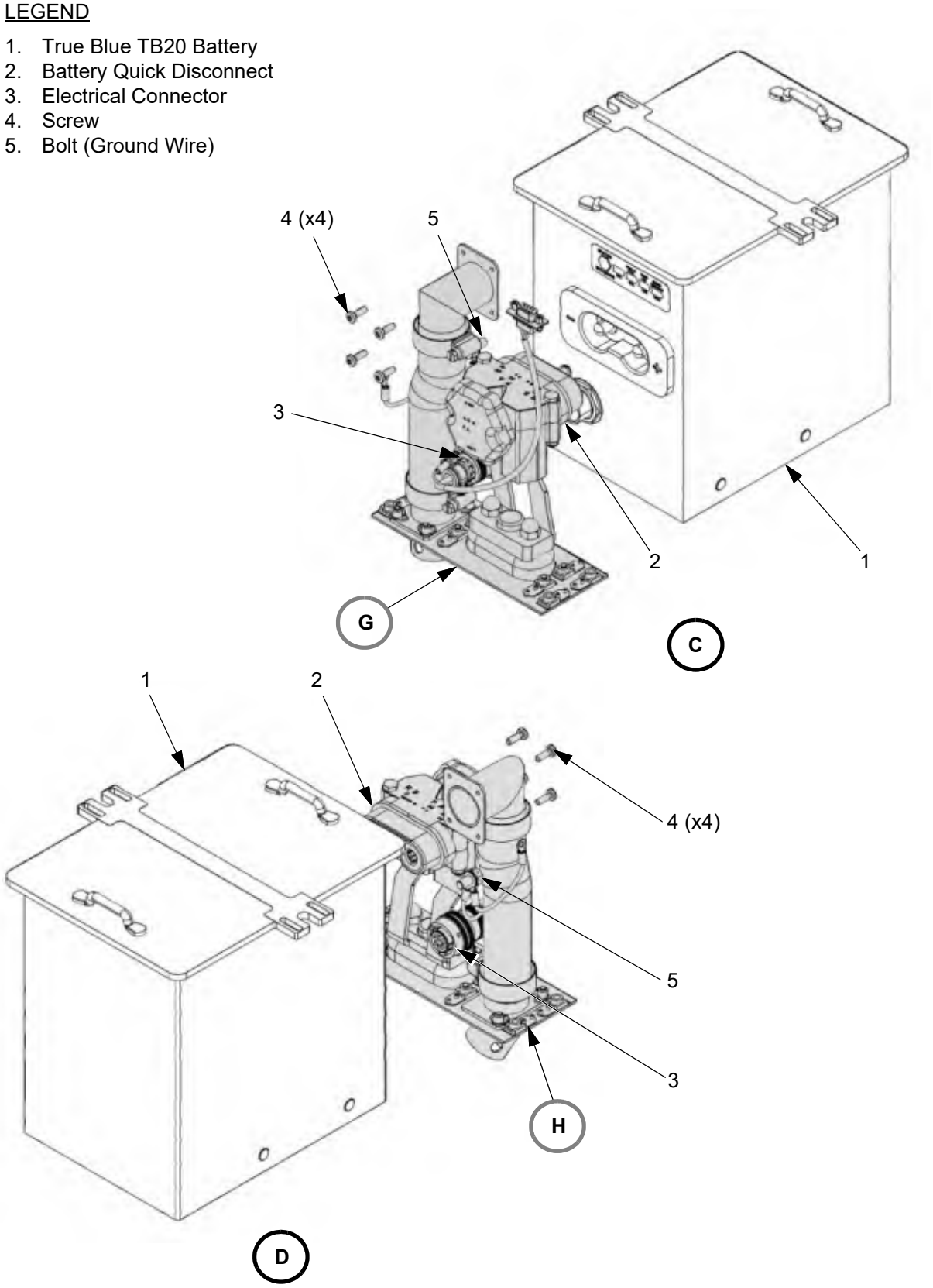

Figure 24-30.2: Battery Installation (Sheet 6 of 7)

LEGEND

1. Screw
2. Washer
3. Lockwasher
4. Ground Terminal
5. Nut
6. Battery Case
7. Jack Screw
8. Electrical Connector

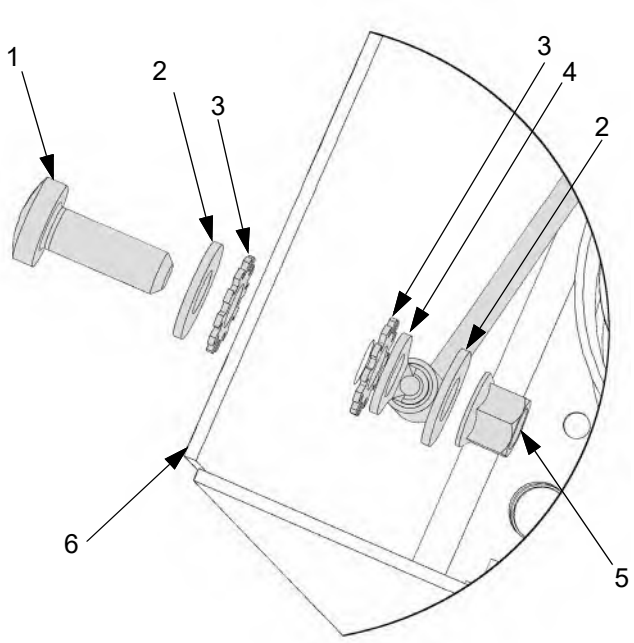

E

Battery Case Ground Connection
(Typ. Left and Right Batteries)

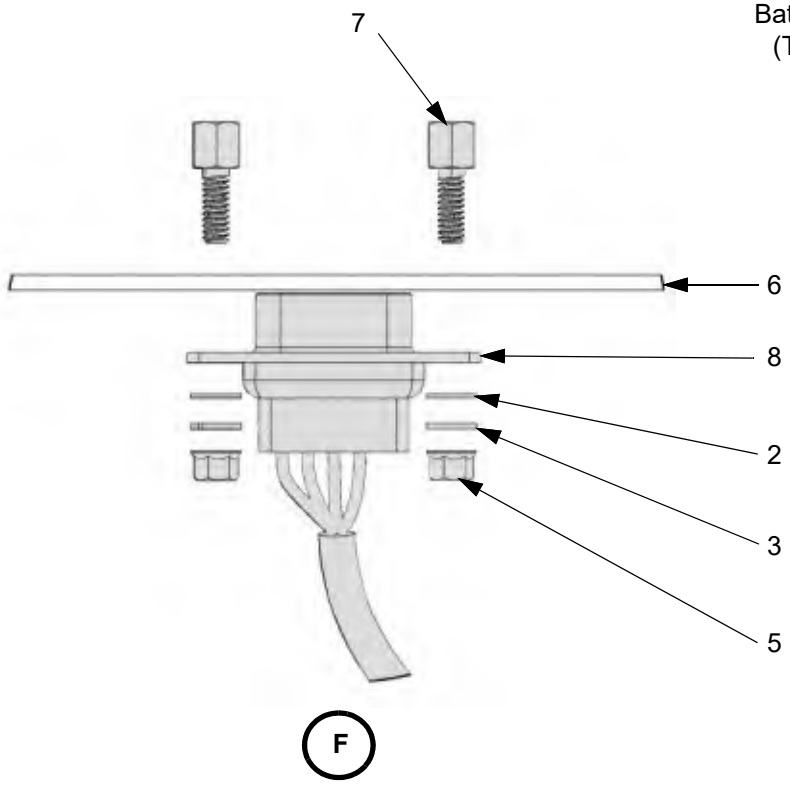

F

Battery Case Electrical Connector
(Typ. Left and Right Batteries)

Figure 24-30.2: Battery Installation (Sheet 7 of 7)

LEGEND

1. Quick Disconnect
2. Bus Bar
3. Nylon Cap Nut
4. Terminal Cover
5. Wire Harness
6. Nut
7. Lockwasher
8. Hose Clamp
9. SCAT Tubing
10. Exhaust Plate
11. Quick Disconnect Receptacle
12. Battery Vent Weldment
13. Battery Box Vent
14. Screw
15. Backshell Fasteners

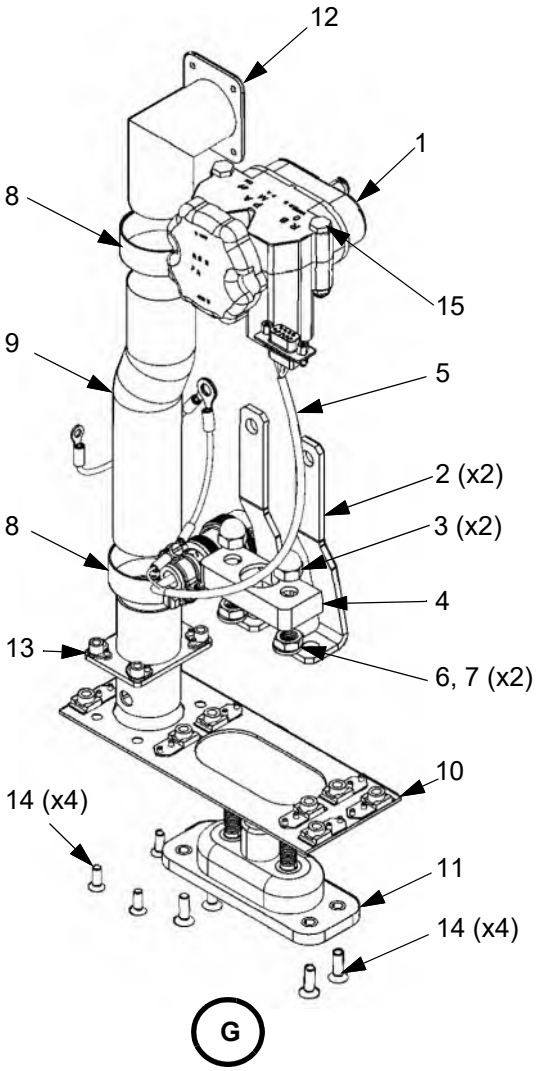

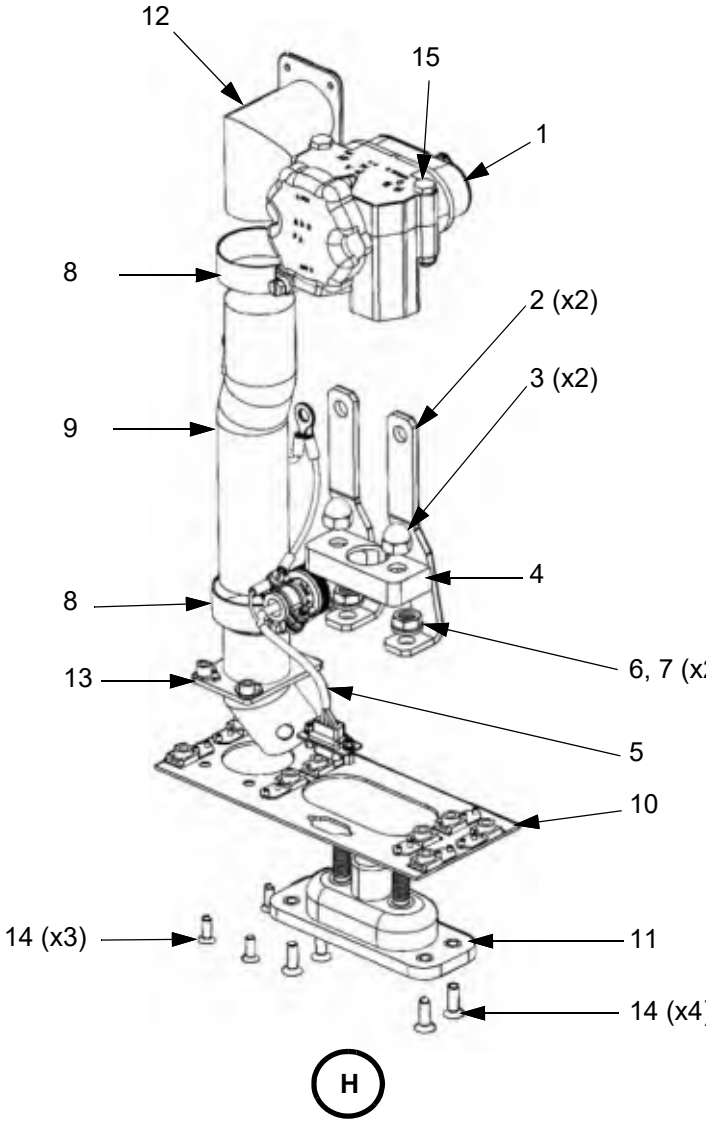

C. Master Control Unit (MCU)

(1) Removal

(a) Verify the BATT 1 and BATT 2 switches are set to OFF.

(b) Disconnect external electrical power from the airplane (refer to Chapter 24-40).

(c) Remove the upper, left, and right side cowling (refer to Chapter 71-10).

(d) Remove the right intercooler (refer to Chapter 21-20).

(e) Disconnect the aircraft batteries by disconnecting the negative battery cables first then the positive battery cables. Insulate the battery terminals.

Note: To reduce the possibility of personal injury and equipment damage, disconnect the negative battery cable before disconnecting the positive battery cable.

(f) Identify and disconnect all cables from the MCU.

(g) Remove the four bolts (or Hi-Loks), washers, and nuts attaching the MCU to the firewall. Remove the MCU from the airplane.

(2) Installation

(a) Clean all hardware and mounting surfaces with isopropyl alcohol.

(b) Coat the bolts (or Hi-Loks) using PPG Aerospace Fire Sealant Paste PR-1995.

(c) Attach the MCU to the firewall using four bolts (or Hi-Loks), washers, and nuts.

CAUTION: When torquing Batt 1 wire to MCU, assure no contact between the Batt 1 and essential bus terminal.

(d) Connect all cables to the correct terminals on the MCU. Torque nuts as follows:

(i) 1/4-28 UNF-2A threads: 22 - 28 in-lbs.

(ii) 5/16-24 UNF-2A threads: 45 - 55 in-lbs.

(e) Connect the aircraft batteries starting with the positive battery cables then the negative cables.

WARNING: To reduce the possibility of personal injury and equipment damage, connect the positive battery cable before connecting the negative battery cable.

CAUTION: Connecting the battery cables to the incorrect terminals can result in serious damage to the electrical system.

(f) Install the right intercooler (refer to Chapter 21-20).

(g) Install the cowling (refer to Chapter 71-10).

(3) MCU Operational Check

Note: Do not connect external power to the airplane for this check.

(a) Verify MCU diode, cross-tie relay, and power bus operation as follows:

(i) Make sure all circuit breakers on the MCU are in and the batteries are connected.

(ii) Open all circuit breakers on the left and right cockpit circuit breaker panels.

(iii) Set the BATT 1 switch to ON. Make sure no systems turn on.

(iv) To verify battery power on the Essential Bus, reset the PANEL LIGHTS circuit breaker and make sure the BATT 1 switch illuminates ON.

(v) To verify no battery power on the Avionics Bus, reset the AVIONICS FAN circuit breaker, make sure the avionics fan does not come on.

(vi) To verify no battery power on the ACC 1 Bus, reset the LAMP TEST circuit breaker. Press the LAMP TEST switch and make sure only the BATT 1 ON light is illuminated.

(vii) To verify no battery power on the ACC 2 Bus, reset the STROBE LIGHTS circuit breaker. Set the STROBE switch to ON and make sure the strobe lights do not come on. Set the STROBE switch to off.

(viii) To verify power to the Avionics Bus, reset the X-TIE circuit breaker and make sure the avionics fan comes on.

(ix) To verify power to the ACC 1 bus, press the LAMP TEST switch and make sure all switch panel ON lights illuminate. Release the LAMP test switch.

(x) To verify power to the ACC 2 bus, set the STROBE switch to ON and make sure the strobe lights come on. Set the STROBE switch to off.

(xi) Open the X-TIE circuit breaker and make sure the avionics fan turns off.

(xii) Set the BATT 2 switch to ON.

(xiii) Set the BATT 1 switch to off.

(xiv) To verify power to the Essential and Avionics buses, make sure the avionics fan turns on.

(xv) To verify power on the ACC1 bus, press the LAMP TEST switch and make sure all switch panel ON lights illuminate. release the LAMP test switch.

(xvi) To verify power on the ACC2 bus, set the STROBE switch to ON and make sure the strobe lights come on. Set the STROBE switch to off.

(xvii) Set the BATT 2 switch to off.

(xviii) Reset all circuit breakers on the left and right cockpit circuit breaker panels.

(b) Verify the Hot Bus by checking Auto Lights operation:

(i) Make sure the BATT 1 and BATT 2 switches are off.

(ii) Close the cabin door.

(iii) Open the cabin door and make sure the wash lights and step lights illuminate.

(c) Do the Adjustment/Test procedure for the Starter/Generator and GCU, refer to Chapter 24-30.2.G(3).

(d) Do the Adjustment/Test procedure for the Standby Alternator and Alternator Control Unit, refer to Chapter 24-30.2.H(3).

(4) MCU Essential Bus Isolation Diode Check

Note: Use of external power will cause a false failure of this test. Disconnect external power before proceeding.

(a) Pull the X-TIE circuit breaker.

(b) Make sure STROBE light switch is set to off.

(c) Set the BATT 1 switch to ON.

(d) If nothing powers up BATT 1 diode is open (FAIL).

(e) Set the STROBE light switch to ON.

(f) If the strobe lights come on the PRIMARY diode is shorted (FAIL).

(g) Set the STROBE light switch to off.

(h) If just the essential bus powers up (PFD1 powers up and PDF2 does not), then PRIMARY diode is either open or good and BATT 1 diode is either shorted or good. Proceed to the next step.

(i) Set the BATT 1 switch to off.

(j) Set the BATT 2 switch to ON.

(k) If the essential bus does not power up (PFD1 does not power up), then PRIMARY diode is open (FAIL).

(l) If the essential bus powers up (PFD1 powers up), then PRIMARY diode is good. Proceed to the next step.

(m) Using a calibrated digital multimeter, check voltage at the Standby Alternator stud on the MCU:

(i) If voltage is ~24V, the BATT 1 diode is shorted (FAIL).

(ii) If voltage at Standby Alternator stud is ~0V, then BATT 1 diode is good. (SUCCESSFUL TEST).

(n) Set the BATT 2 switch to off.

(o) Reset the X-TIE circuit breaker.

(p) If any diodes fail the check, contact Epic Aircraft Customer Service for disposition:

Epic Aircraft, LLC
22590 Nelson Road
Bend, OR 97701
541-318-8849

Figure 24-30.4: MCU

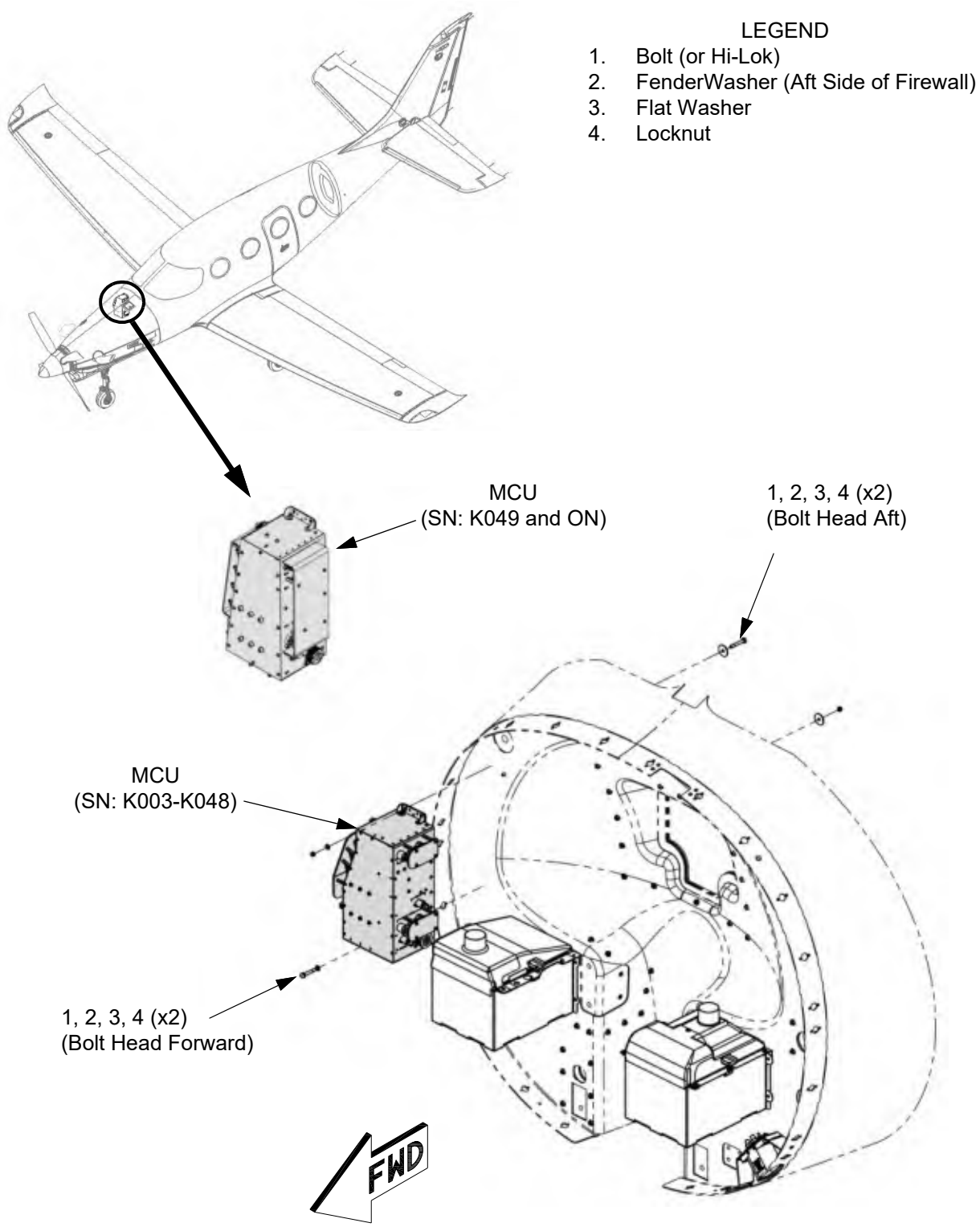

D. Starter/Generator Brush Inspection

(1) Verify the BATT 1 and BATT 2 switches are set to OFF.

(2) Disconnect external electrical power from the airplane (refer to Chapter 24-40).

(3) Remove the upper and side cowling (refer to Chapter 71-10).

(4) Remove the starter/generator from the airplane.

(5) Do the inspection procedures in the latest revision of the Skurka Aerospace Inc. Starter Generator Installation Manual, Document Number IM 001, Service Letter SL193, and SL180 (SL180 is for new or newly overhauled starter/generators only).

(6) Install the starter/generator.

(7) Install the cowling (refer to Chapter 71-10).

E. Starter/Generator

(1) Removal

(a) Verify the BATT 1 and BATT 2 switches are set to OFF.

(b) Disconnect external electrical power from the airplane (refer to Chapter 24-40).

(c) Remove the upper and side cowlings (refer to Chapter 71-10).

(d) Disconnect the electrical harness from the starter/generator.

Note: Two mechanics are required for removal or installation of the starter/generator.

(e) While maintaining alignment of the starter/generator, loosen the band clamp attaching the starter/generator to the engine case mount.

(f) Carefully remove the starter/generator from the case mount while keeping the spline shaft alignment to prevent binding.

(g) Remove the starter/generator from the airplane.

(h) Remove the engine case mount if necessary.

(2) Installation

(a) If the engine case mount was removed, install a new gasket onto the engine mount before re-installation. Apply a thin coat of Loctite™ 518 to both sides of the gasket.

(b) Install a new O-ring onto the drive shaft of the starter/generator. Lubricate the O-ring with engine oil (refer to MIL-PRF-23699) before installation.

(c) Prior to installation verify that:

- There are no burrs or foreign object on the starter/generator shaft.
- The starter/generator alignment pins are clean, undamaged, and unbent.
- The mounting surfaces are clean and free of burrs.
- The engine case mount alignment pin holes are free of burrs and foreign objects and in good condition.

- The drive shaft is concentric to the armature of the starter/generator. If the drive shaft appears to be out of position, lightly tap on the drive shaft spline, using a soft faced mallet to move it back into full concentric position. Refer to the latest revision of the Skurka Aerospace Inc. Starter Generator Installation Manual, Document Number IM 001.
- Note the required torque on the v-band clamp.

CAUTION: Do not use the drive shaft as a grip to lift the starter generator.

CAUTION: Misalignment and/or binding of the starter/generator splines and drive shaft can reduce the starter/generator service life.

Note: Two mechanics are required for removal or installation of the starter/generator.

Note: One mechanic should maintain the alignment of the starter/generator by holding it in place and keeping the mounting surfaces flush, while the other installs and torques the band clamp.

(d) Insert the starter/generator into the engine case mount ensuring the splines on the drive shaft mesh with the splines in the engine accessory case.

(e) Attach the starter/generator to the engine case mount using the band clamp as follows:

(i) While tightening the band clamp, tap around the circumference of the clamp ring with a soft faced hammer to position the clamp firmly on the starter/generator.

(ii) Torque to the band clamp to the torque value indicated on the band clamp.

(f) Connect the electrical harness.

(g) Install the cowling (refer to Chapter 71-10).

(h) Do the Generator Control Unit (GCU) Adjustment/Test procedure.

(i) If the GEN AMP reading is not 0 when the engine isn't running, do the Amp Indication DAT Calibration, refer to Chapter 39.10.1.H (SN: K003-K085, except K014) or Chapter 39.11.1.H (SN: K014, K086 and On).

F. Standby Alternator

(1) Removal

(a) Verify the BATT 1 and BATT 2 switches are set to off.

(b) Disconnect external electrical power from the airplane (refer to Chapter 24-40).

(c) Remove the upper and side cowlings (refer to Chapter 71-10).

(d) Disconnect the electrical harness from the alternator.

(e) Remove the (4) nuts and (4) lockwashers that attach the alternator to the spacer.

(f) Remove the alternator and gasket from the spacer.

(g) If removing the spacer, remove the (4) cap crews and (4) lockwashers that attach the spacer to the gearbox.

(h) Remove the spacer and gasket from the gearbox.

(2) Installation

(a) If the spacer was removed, install a new gasket onto the gearbox. Apply a thin coat of Loctite™ 518 to both sides of the gasket.

(b) Put the spacer in position on the gearbox and install the (4) cap screws and (4) lockwashers finger tight.

(c) Initial torque the cap screws in a criss-cross pattern to 20 in-lbs

(d) Final torque the cap screws in a criss-cross pattern to 60 - 70 in-lbs.

(e) Install a new gasket on the spacer. Apply a thin coat of Loctite™ 518 to both sides of the gasket.

(f) Apply grease MIL-G-21164 to the alternator splined coupler and the mating teeth on the gearbox.

Note: The splined coupler (PN: 410-228-1) can be removed from the alternator and replaced independently if needed.

(g) Put the alternator in position on the spacer and install the (4) nuts and (4) lockwashers finger tight.

(h) Initial torque the nuts in a criss-cross pattern to 20 in-lbs

(i) Final torque the nuts in a criss-cross pattern to 60 - 70 in-lbs.

(j) Connect the electrical harness.

(k) Install the cowling (refer to Chapter 71-10).

(l) Do the Adjustment/Test of the Alternator Control Unit (refer to Chapter 24-30.2.H[3]).

(m) If the ALTN AMP reading is not 0 when the engine isn't running, do the Amp Indication DAT Calibration, refer to Chapter 39.10.1.H (SN: K003-K085, except K014) or Chapter 39.11.1.H (SN: K014, K086 and On).

(3) Do the functional check of the ALT FIELD Circuit Breaker (CB119) as follows:

(a) Start the engine (refer to Chapter 71-00).

(b) Set the engine to high idle.

(c) Make sure BATT 1 V and BATT 2 V indications on the MFD show generator voltage (~28v).

(d) make sure the STBY ALTN switch is pressed IN.

(e) Set the STARTER GEN switch to off.

(f) Open the ALT FIELD circuit breaker.

(g) Make sure BATT 1 V and BATT 2 V indications on the MFD show battery voltage (~24v) instead of generator/alternator voltage (~28v).

(i) If the BATT 1 V and BATT 2 V indications show generator/alternator voltage (~28v), replace the ALT FIELD circuit breaker (CB119).

(h) Close the ALT FIELD circuit breaker.

(i) Set the STARTER GEN switch to ON.

(j) Shut down the engine (refer to Chapter 71-00).

Figure 24-30.5: Starter/Generator and Alternator

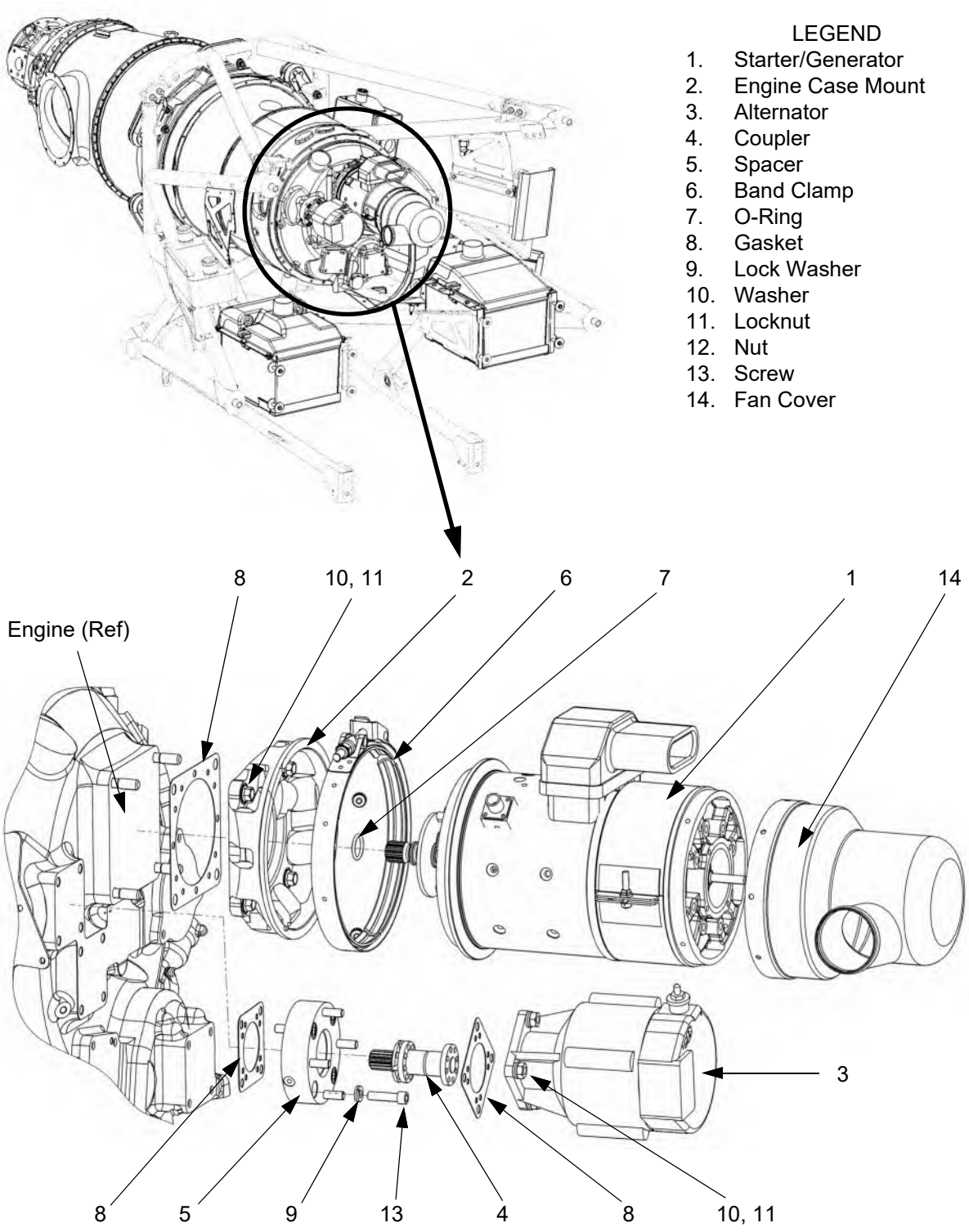

G. Generator Control Unit (GCU)

The generator control unit gives voltage regulation, generator line contactor control, generator current limit (cross start), differential voltage sensing, generator paralleling control, reverse current protection, overvoltage protection, over-excitation protection, starter field current control (field weakening), automatic starter cut-off, start contactor control, ground fault and open ground protection.

(1) Removal

(a) Verify the BATT 1 and BATT 2 switches are set to OFF.

(b) Disconnect external electrical power from the airplane (refer to Chapter 24-40).

(c) Remove the cowling (refer to Chapter 71-10).

(d) Disconnect the SCAT tubing from the cooling shroud.

(e) Disconnect the wiring harness from the Generator Control Unit (GCU).

(f) Remove the locknuts and washers that attach the GCU and cooling shroud to the intake plenum.

(g) Remove the GCU.

(2) Installation

(a) Attach the GCU and cooling shroud to the intake plenum with the washers and locknuts.

(b) Connect the SCAT tubing to the cooling shroud.

(c) Connect the wiring harness to the control unit.

(d) Do the adjustment/test of the GCU.

(e) Install the cowling (refer to Chapter 71-10).

(3) Adjustment/Test

(a) Start the engine (refer to chapter 71-00 or the latest revision of the AFM).

(b) Set the engine to high idle.

(c) Make sure the AIR COND switch is set to off.

(d) Note the battery 1 and 2 voltages indicated on the MFD.

(e) If indicated voltages are 28.8 +/- 0.1V, do the steps that follow:

(i) Set the AIR COND switch to ON.

(ii) Make sure the ALTERNATOR ON CAS messages does not illuminate.

Note: If the ALTERNATOR ON CAS message illuminates, the difference between the generator and standby alternator operating voltages is 0.4v or less. Adjust the GCU and/or ACU as needed to get the required greater than 0.4v difference in operating voltage and perform the test again.

(iii) Set the AIR COND switch to off.

(iv) Shut down the engine (refer to chapter 71-00 or the latest revision of the AFM).
(v) Install the upper cowling if removed (refer to Chapter 71-10).

(f) If indicated voltage is not 28.8 +/- 0.1V, do the steps that follow:

(i) Shut down the engine (refer to chapter 71-00 or the latest revision of the AFM).
(ii) Remove the upper cowling if not already removed (refer to Chapter 71-10).
(iii) Loosen the screw on the voltage adjustment access panel to access the adjustment potentiometer.
(iv) Using a non-metallic screwdriver, adjust the potentiometer to up or down as needed.

Note: Clockwise will increase voltage, counter-clockwise will decrease voltage. One complete turn of the potentiometer equals approximately 0.2v.

(v) Start the engine (refer to chapter 71-00 or the latest revision of the AFM).
(vi) Set the engine to high idle.
(vii) Make sure the AIR COND switch is set to off.
(viii) Make sure battery voltages on the MFD are 28.8 +/- 0.1V.
(ix) Set the AIR COND switch to ON.
(x) Make sure the ALTERNATOR ON CAS message does not illuminate.

Note: If the ALTERNATOR ON CAS message illuminates, the difference between the generator and standby alternator operating voltages is 0.4v or less. Adjust the GCU and/or ACU as needed to get the required greater than 0.4v difference in operating voltage and perform the test again.

(xi) Set the AIR COND switch to off.

CAUTION: Do not exceed start cycle limits, refer to the current revision of the AFM.

(xii) Repeat adjustment as needed to get 28.8 +/- 0.1V as indicated on the MFD.
(xiii) Close the voltage adjustment access panel.
(xiv) Install the upper cowling (refer to Chapter 71-10).

Figure 24-30.6: Generator Control Unit

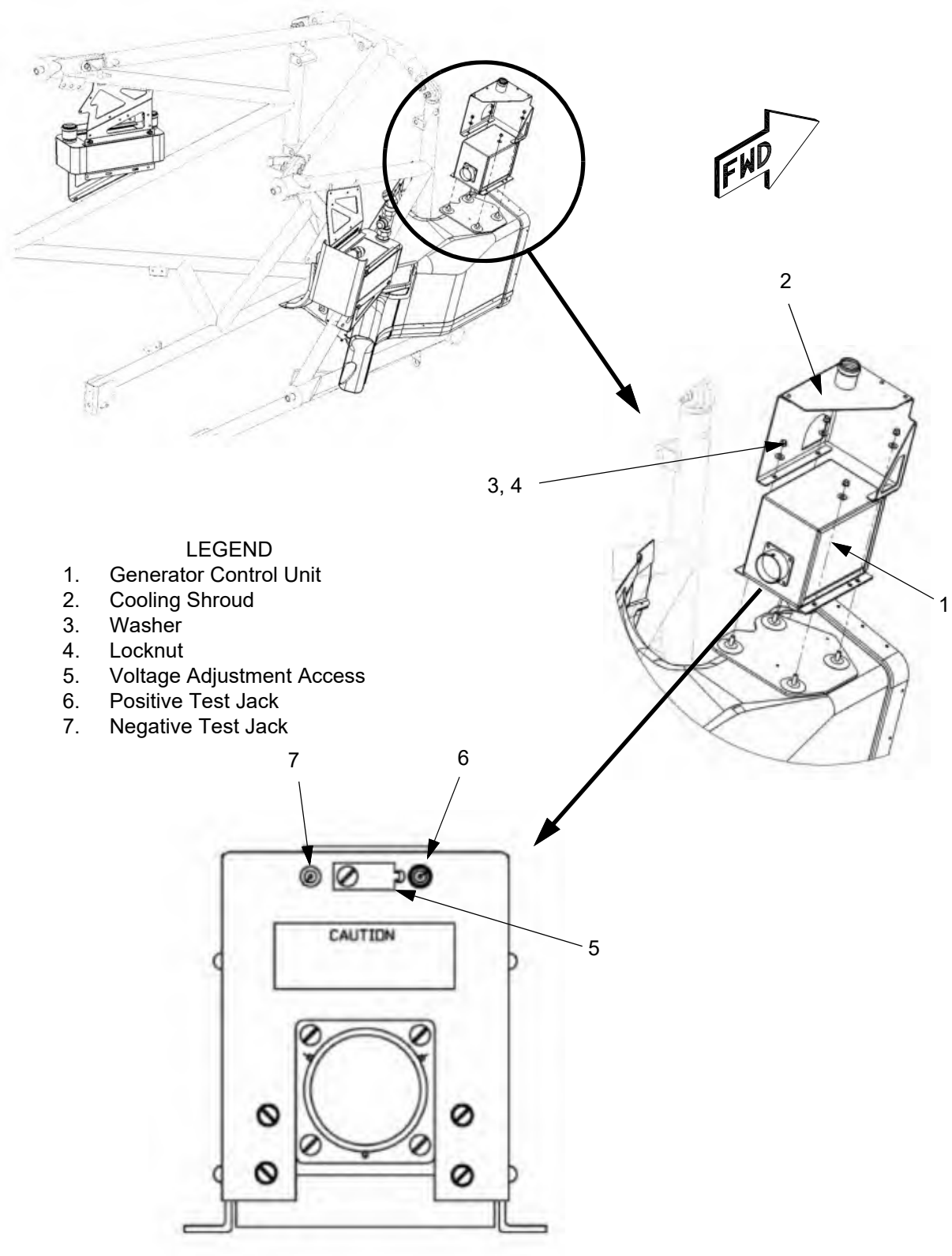

H. Alternator Control Unit

(1) Removal

(a) Remove PFD 1 (refer to Chapter 34-40).

(b) Remove the locknuts and washers that attach the control unit to the instrument panel.

(c) Carefully pull the control unit forward then disconnect the wiring harness.

(d) Remove the control unit.

(2) Installation

(a) Inspect the wiring connectors to ensure there are no bent or damaged pins. Repair any damage.

(b) Connect the wiring harness to the back of the control unit.

(c) Attach the control unit to the instrument panel using washers and locknuts.

(d) Do the Alternator Control Unit adjustment/test procedure.

(e) Install PFD 1 (refer to Chapter 34-40).

(3) Adjustment/Test

(a) Start the engine (refer to chapter 71-00 or the latest revision of the AFM).

(b) Set the engine to high idle.

(c) Set the STBY ALTN switch to ON.

(d) Note battery 1 and 2 voltage on the MFD.

(e) Make sure the ALTERNATOR ON CAS message is off and ALTN AMPS shows zero amps.

(f) Set the AIR COND switch to ON.

(g) Set the engine to low idle.

(h) As the Ng indication slows to low idle, note the battery 1 and 2 voltages when the ALTERNATOR ON CAS message illuminates.

(i) Make sure ALTN AMPS increases above zero amps.

Note: Battery 1 and 2 voltage must be at least 0.4v lower on the standby alternator than they are on the generator.

(j) If battery 1 and 2 voltage on the MFD is 28.3 +/- 0.1v when the ALTERNATOR ON CAS message illuminated, do the steps that follow:

(i) Set the AIR COND switch to off.

(ii) Shut down the engine (refer to chapter 71-00 or the latest revision of the AFM.

(k) If battery 1 and 2 voltage on the MFD is not 28.3 +/- 0.1v when the ALTERNATOR ON CAS message illuminated, do the steps that follow:

(i) Set the AIR COND switch to off.

(ii) Shut down the engine (refer to chapter 71-00 or the latest revision of the AFM).

(iii) Remove PFD 1 if not already removed (refer to Chapter 34-40).

(iv) Remove the black 3/4” rubber plug on the side of the Alternator Control unit to access the adjustment potentiometer.
(v) Take note of the current position of the adjustment screw.
(vi) Using a non-metallic screwdriver, adjust the potentiometer up or down as needed.

Note: Clockwise will increase voltage, counter-clockwise will decrease voltage. 1/2 turn of the potentiometer equals approximately 0.16v.

(vii) Start the engine (refer to chapter 71-00 or the latest revision of the AFM).
(viii) Set the engine to high idle.
(ix) Set the STBY ALTN switch to ON.
(x) Note battery 1 and 2 voltage on the MFD.
(xi) Make sure the ALTERNATOR ON CAS message is off and ALTN AMPS shows zero amps.
(xii) Set the AIR COND switch to ON.
(xiii) Set the engine to low idle.
(xiv) As the Ng indication slows to low idle, note the battery 1 and 2 voltages when the ALTERNATOR ON CAS message illuminates.
(xv) Make sure ALTN AMPS increases above zero amps.

Note: Battery 1 and 2 voltage must be at least 0.4v lower on the standby alternator than they are on the generator.

CAUTION: Do not exceed start cycle limits, refer to the current revision of the AFM.

(xvi) Repeat the adjustment as needed to get 28.3 +/- 0.1v as indicated on the MFD.
(xvii) Shut down the engine (refer to chapter 71-00 or the latest revision of the AFM).
(xviii) Install the 3/4” black rubber plug.
(xix) Install PFD 1 (refer to Chapter 34-40).

Figure 24-30.7: Alternator Control Unit

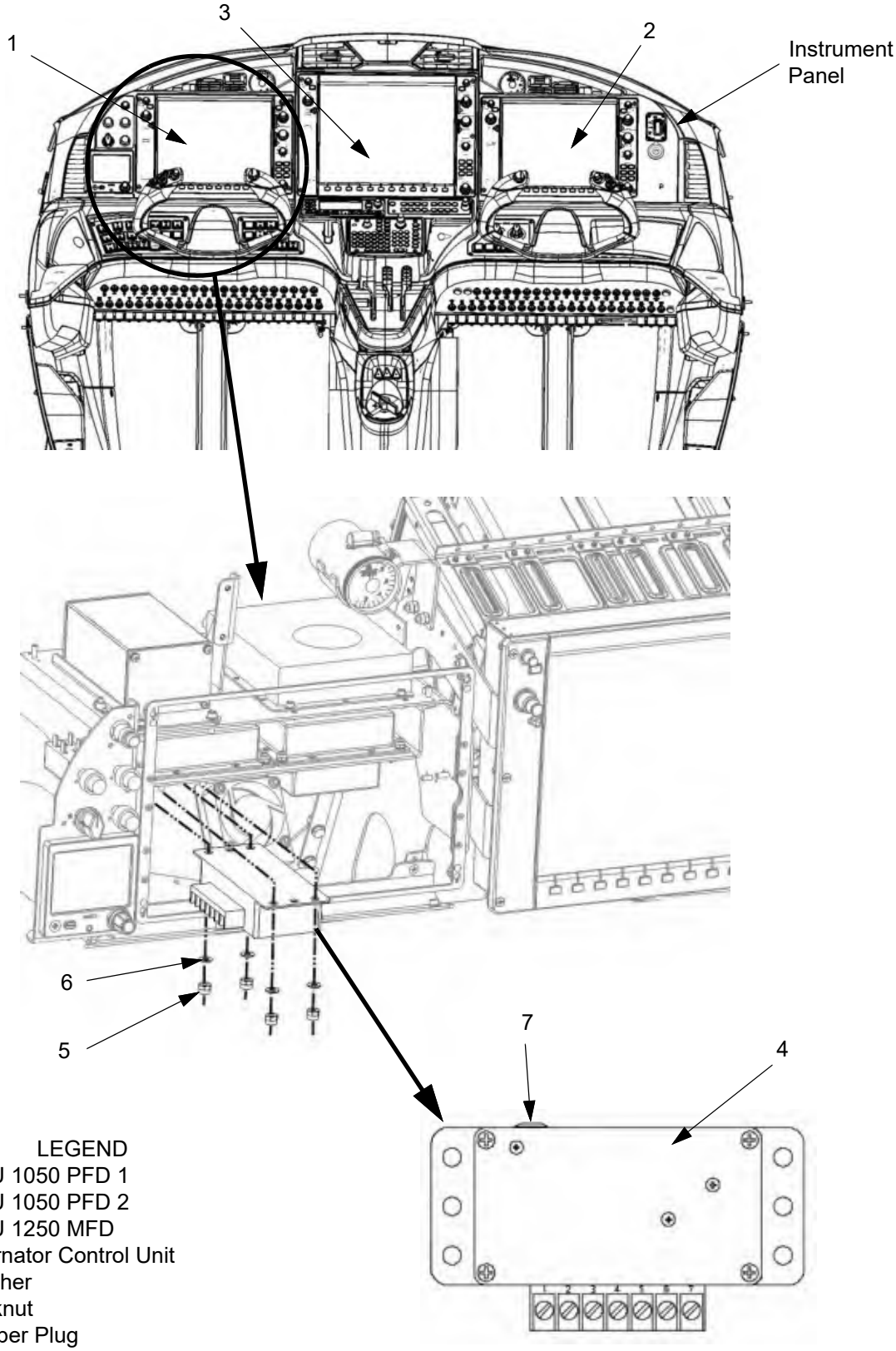

LEGEND

1. GDU 1050 PFD 1
2. GDU 1050 PFD 2
3. GDU 1250 MFD
4. Alternator Control Unit
5. Washer
6. Locknut
7. Rubber Plug

This Page Intentionally Left Blank

EXTERNAL POWER

1. Description

When the airplane is on the ground the DC electrical system can be supplied with electricity by an external electrical power unit (GPU) which is connected under the cowling on the left side of the airplane.

CAUTION: The GPU must be capable of providing a minimum of 200 amps for all systems to be operated continuously and 1000 amps if engine starter operation is required.

K003-K085 (excluding K014), refer to the current revision of the E1000 Wiring Manual, P/N SK05000002.
K014, K086 and on, refer to the current revision of the E1000 Wiring Manual, P/N SK05003002.

2. Maintenance Practices

A. External Power Receptacle

(1) Removal

(a) Ensure all switches in the cockpit are OPEN (not actuated).

(b) Disconnect external electrical power from the airplane (refer to the procedure below).

(c) Remove the cowling (refer to Chapter 71-10).

(d) Disconnect the wiring harness and the ground wire from the external power receptacle. Identify wiring for re-installation.

(e) Remove the two screws attaching the receptacle mounting bracket to the fuselage flange.

(f) Remove the receptacle from the airplane.

(g) Remove the screws attaching the receptacle to the mounting bracket then remove the receptacle from the bracket.

(2) Installation

(a) Put the external power receptacle in position on the mounting bracket.

Note: Make sure the receptacle is oriented in the bracket so the forward arrow is pointed aircraft forward with the sense stud up.

(b) Attach the receptacle to the bracket using two screws.

(c) Hold the receptacle and bracket against the fuselage flange with the forward arrow pointing forward. Attach the bracket to the fuselage flange using two screws.Wet set the screws using Cor-Ban 27L corrosion inhibiting compound or an approved equivalent.

(d) Connect the power, ground, and sense lines to the receptacle. Make sure the power and ground wires are installed on the correct terminals. Torque the power in-lbs. in-lbs. Torque the power and ground nuts to 101 - 117 in-lbs. Torque the sense nut to 21-25 in-lbs.

(e) Connect a ground power unit to the receptacle (refer to the procedure below).

(f) Ensure all switches in the cockpit are OPEN (not actuated).

(g) Set the BATT 1 and BATT 2 switches to ON.

(h) Make sure the voltage indicated on the MFD changes from battery voltage to GPU voltage.

(i) Set the BATT 1 and BATT 2 switches to off.

(j) Disconnect the ground power unit.

(k) Install the cowling (refer to Chapter 71-10).

B. External Power Application

(1) Connection

WARNING: Make sure all de-ice and anti-ice systems switches are in the off position before applying power, damage to sensitive components may occur.

(a) Make sure all aircraft system switches are off.

(b) Connect a ground power unit (GPU) to the GPU receptacle on the airplane.

(c) Set the BATT 1 switch to ON.

(d) Set the BATT 2 switch to ON (optional).

(e) Turn the ground power unit on.

Note: Air conditioning may be operated with ground power on.

(2) Disconnection

(a) Make sure all aircraft system switches are off.

(b) Set the BATT 2 switch to off if actuated.

(c) Set the BATT 1 switch to off.

(d) Turn off the GPU and disconnect it from the airplane.

Figure 24-40.1: External Power Receptacle (Sheet 1 of 2)

LEGEND

1. External Power Receptacle
2. Mounting Bracket
3. Screw

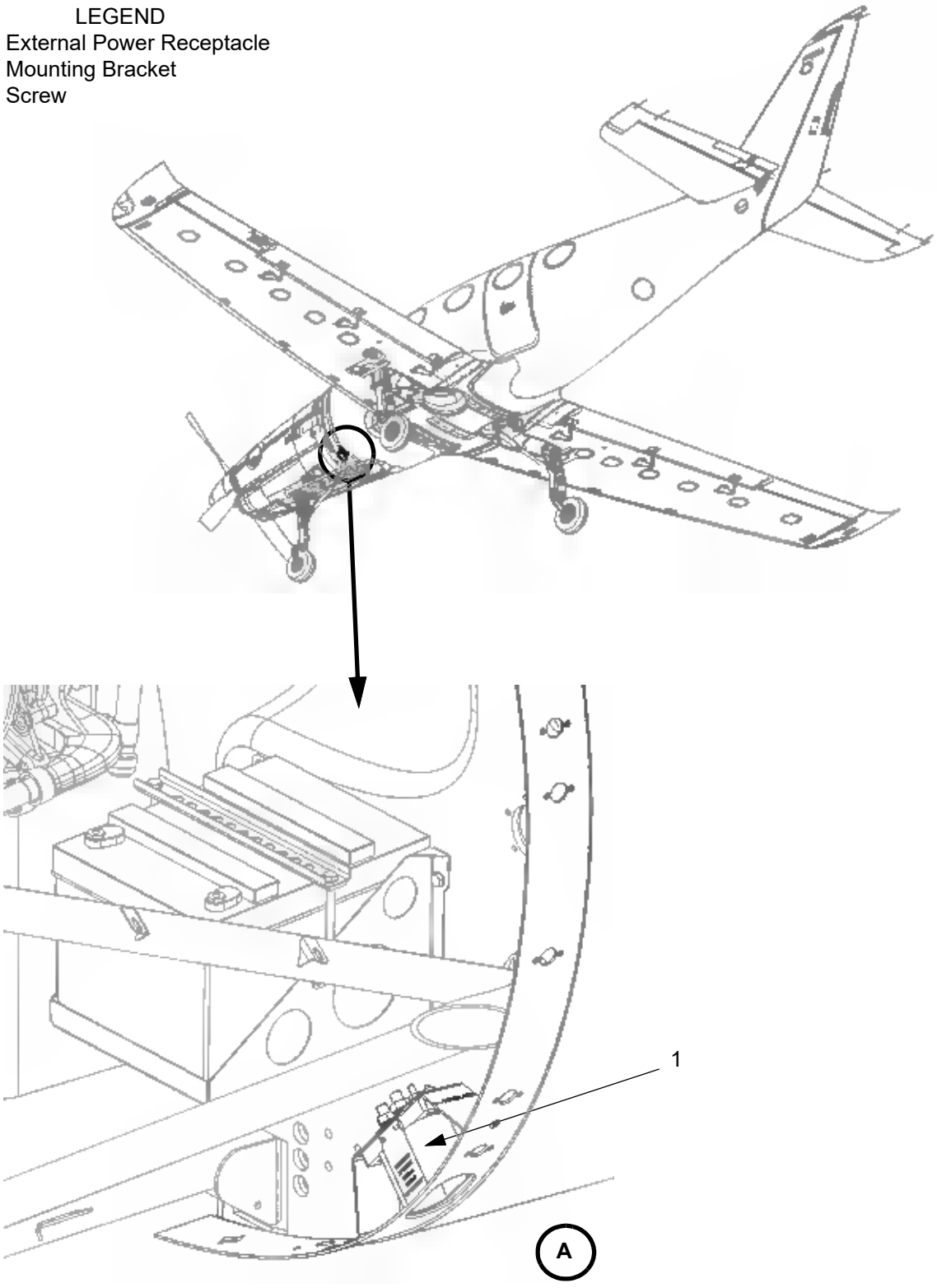

Figure 24-40.1: External Power Receptacle (Sheet 2 of 2)

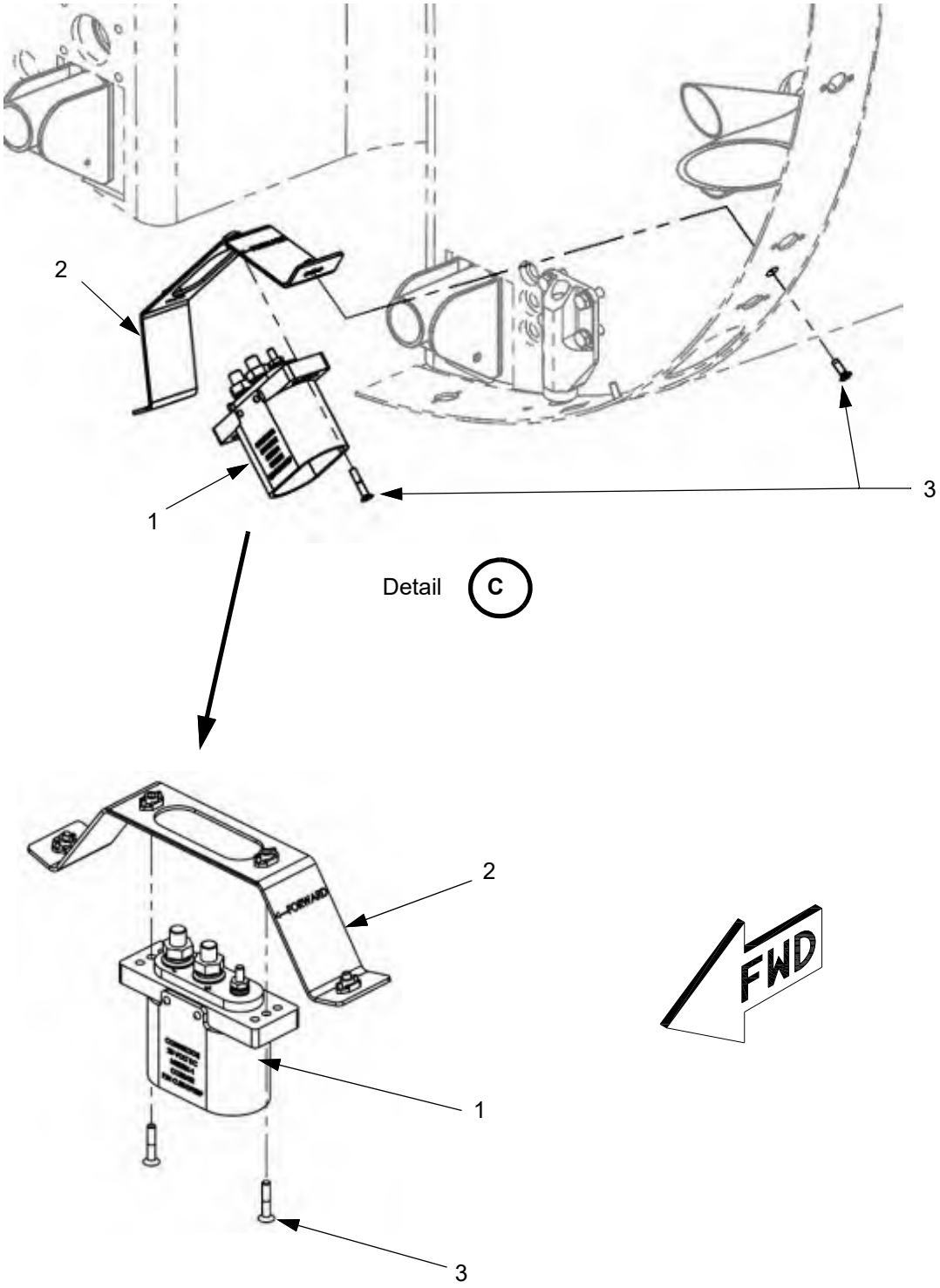

DC ELECTRICAL LOAD DISTRIBUTION

1. Description

K003-K085, except K014, refer to the current revision of the E1000 Wiring Manual, P/N SK05000002.

K014, K086 and on, refer to the current revision of the E1000 Wiring Manual, P/N SK05003002.

A. Power Distribution

Electrical power for the system, including the essential bus, is supplied by the starter-generator through the primary bus. If the starter-generator fails, power is supplied by the engine driven alternator and depending on electrical load the aircraft batteries. During an emergency in which both the starter-generator and the alternator have failed, power is supplied by two aircraft batteries.

The electrical power distribution system for this airplane is the primary bus, essential bus, accessory bus 1, accessory bus 2, auxiliary bus, and the avionics bus in the MCU with the associated buses in the circuit breaker panels. Mechanical circuit breakers are used to protect systems and equipment operating on all buses and are located on the MCU, underneath the instrument panel on the pilot and copilot sides, and aft of the aft pressure bulkhead near the air conditioning compressor.

Power from the MCU is provided to the buses as follows:

- The Essential Bus circuit breaker panel is powered through a 50 amp current limiter.
- The Accessory 1 bus circuit breaker panel is powered through an 80 amp current limiter.
- The Accessory 2 bus circuit breaker panel is powered through a 50 amp current limiter.
- The Auxiliary bus circuit breaker panel is powered through a 150 amp current limiter.
- The Avionics bus circuit breaker panel is powered through a 50 amp current limiter.

B. Circuit Protection

Circuit breakers and fuses protect the electrical system. There are 4 circuit breaker panels on this airplane. One is located on the MCU, two are located under the instrument panel (one on the pilot side, one on the copilot side), and the last one is located aft of the aft pressure bulkhead near the air conditioning compressor.

The circuit for each circuit breaker is labeled near the applicable circuit breaker. The circuit breaker capacities are labeled on the top of each circuit breaker. They are two position circuit breakers and are either open or closed. In the closed position the circuit breaker will automatically open the circuit if a fault or overload occurs. In the open position the circuit is disconnected. Resetting an open circuit breaker can only be done manually and only once if opened automatically.

Note: Only the circuit breakers in the pilot and copilot circuit breaker panels are resettable in flight.

C. Switches

The BATT 1, BATT 2, STARTER GEN, and STBY ALT switches are in a switch panel above the circuit breaker panel on the pilot's side. With the BATT 1 and BATT 2 switches in the "ON" position the starter-generator can be energized and used to start the engine. When the engine is running, the starter-generator and the alternator generate electrical power for the system.

D. Transmission Wire

Power is routed throughout most of the airplane using 22759/16 ethylene tetrafluoroethylene (ETFE) coated wires. These wires have a 150 ºC (302 ºF) rating.

E. Convenience Power

The airplane has 12 VDC and 5 VDC (USB) convenience power.

There are two 12 VDC electrical receptacles. One located in the upper right side of the instrument panel and one convenient to the right hand of the left side rearward facing passenger seat.

28 VDC for the 12 VDC receptacles is supplied through the 15A12V CONV circuit breaker on the ACC2 BUS on the left circuit breaker panel.

There are five dual USB charging ports. One each for the pilot and copilot located in their respective outboard armrests. One each for both right side passenger seats and the forward left passenger seat.

The 5 VDC USB charging ports are powered by 28 VDC from the ACC2 BUS through the 5A USB circuit breaker on the right circuit breaker panel. Each USB charging port receives 28 VDC from the aircraft and converts it to 5 VDC for charging USB devices. Power to the USB ports is available when aircraft power is on.

2. Maintenance Practices

A. Circuit Breakers

(1) Removal

(a) Verify the BATT 1 and BATT 2 switches are set to OFF.

(b) Disconnect external electrical power from the airplane (refer to Chapter 24-40).

(c) Remove the screws and washers attaching the circuit breaker overlay and backing plates to the instrument panel.

(d) Remove the circuit breaker overlay then carefully pull the circuit breakers and backing plate outwards.

(e) Identify and disconnect all wires to the circuit breaker to be removed.

(f) Remove all the nuts attaching the circuit breakers in the bus of the circuit breaker to be removed then move them out of the backing plate.

(g) Remove the screw attaching the circuit breaker to the bus bar.

(h) Remove the circuit breaker.

(2) Installation

(a) Attach the circuit breaker of the same rating as that removed to the bus bar using a screw.

(b) Connect the wiring to the circuit breaker.

(c) Insert all of the circuit breakers into the backing plate then attach them using nuts.

(d) Attach the circuit breaker backing plate and circuit breaker overlay to the instrument panel using screws and washers.

Figure 24-60.1: Circuit Breaker Panels (Sheet 1 of 2)

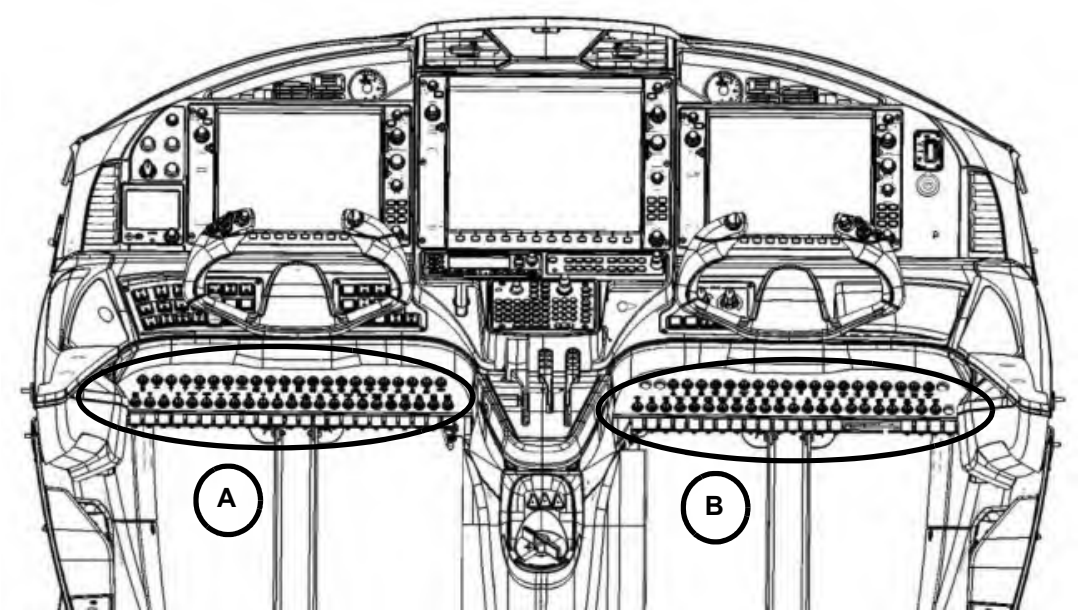

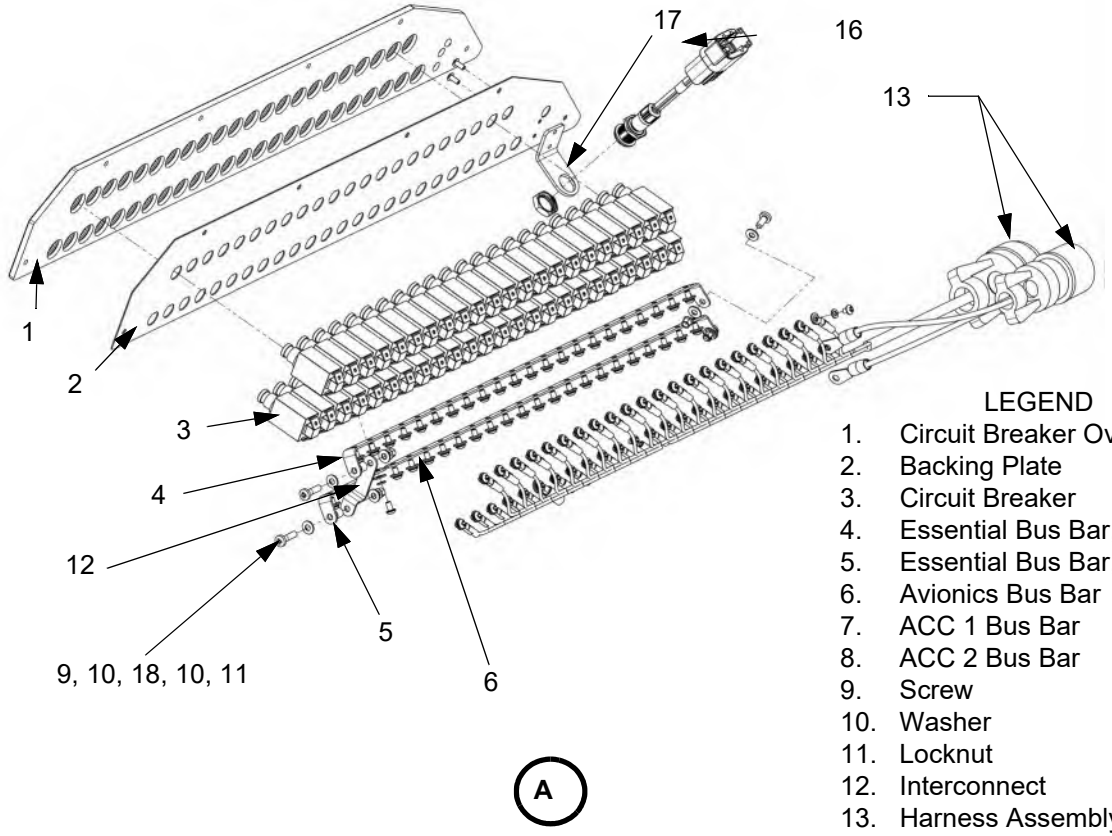

LEGEND

1. Circuit Breaker Overlay
2. Backing Plate
3. Circuit Breaker
4. Essential Bus Bar, Long
5. Essential Bus Bar, Short
6. Avionics Bus Bar
7. ACC 1 Bus Bar
8. ACC 2 Bus Bar
9. Screw
10. Washer
11. Locknut
12. Interconnect
13. Harness Assembly
14. Lock Washer
15. Hole Plug
16. Headphone Connector
17. Headphone Jack Bracket
18. Spacer

Figure 24-60.1: Circuit Breaker Panels (Sheet 2 of 2)

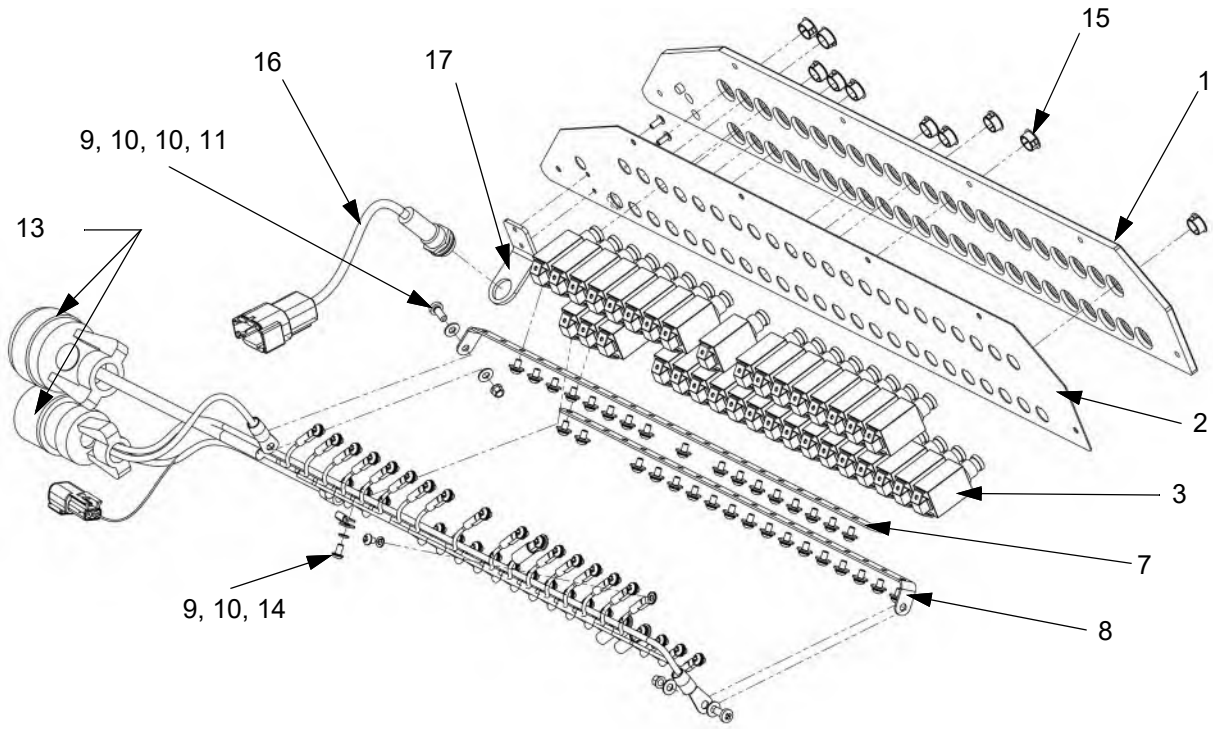

LEGEND

1. Circuit Breaker Overlay
2. Backing Plate
3. Circuit Breaker
4. Essential Bus Bar, Long
5. Essential Bus Bar, Short
6. Avionics Bus Bar
7. ACC 1 Bus Bar
8. ACC 2 Bus Bar
9. Screw
10. Washer
11. Locknut
12. Interconnect
13. Harness Assembly
14. Lock Washer
15. Hole Plug
16. Headphone Connector
17. Headphone Jack Bracket

B. Switches

(1) Removal

(a) Verify the BATT 1 and BATT 2 switches are set to OFF.

(b) Disconnect external electrical power from the airplane (refer to Chapter 24-40).

(c) Remove the screws and washers attaching the switch panel to the instrument panel then carefully pull the panel outwards.

(d) Rotate the cap of the switch to the side of the base opening. Two mounting-screw heads will be visible.

CAUTION: The cap is permanently attached to the base with a flex circuit. Do not crease the flex circuit.

(e) Rotate both mounting screws counterclockwise to move the mounting cams to the bottom of the mounting screws and into the recessed area.

(f) Remove the mounting sleeve from the back of the panel and the switch.

(g) Remove the switch.

(2) Installation

(a) Hold the cap with thumb and forefinger and pull it straight out from the base. The switch requires approximately 2-5 pounds of force to remove the cap from the base. The cap is permanently attached to the base with a flex circuit.

(b) Rotate the cap to the side of the base opening. Two mounting screw heads will be visible.

CAUTION: The cap is permanently attached to the base with a flex circuit. Do not crease the flex circuit.

(c) Rotate both mounting screws counterclockwise to move the mounting cams to the bottom of the mounting screws and into the recessed area.

(d) Slide the base through the spacer if used.

(e) Hold the pushbutton switch so that “TOP” is in the correct position, then insert it into the panel cutout and hold the spacer or mounting flange against the panel.

(f) Hold the mounting sleeve so that “TOP” is in the correct position and slide it over the pushbutton switch from the back of the mounting panel. Make sure the mounting cams are visible through the mounting sleeve cutouts.

(g) From the front of the mounting panel, rotate the mounting screws clockwise to draw up the mounting cams and capture the mounting sleeve. Torque each mounting screw to 16-20 inch-ounces. Do not over-tighten.

(h) Wire the switch as necessary. If using a pushbutton switch with a connector module, it can be wired before installing the switch. The connector module can then be snapped into the rear of the mounting sleeve. The connector module uses the applicable M39029 crimp socket. Use the insertion/removal tool specific to your application.

(i) Rotate the cap back into position and insert it into the base, pressing firmly until it seats with a snap. Operate the pushbutton a few times to ensure smooth actuation.

Figure 24-60.2: Switch Panels (Sheet 1 of 5)

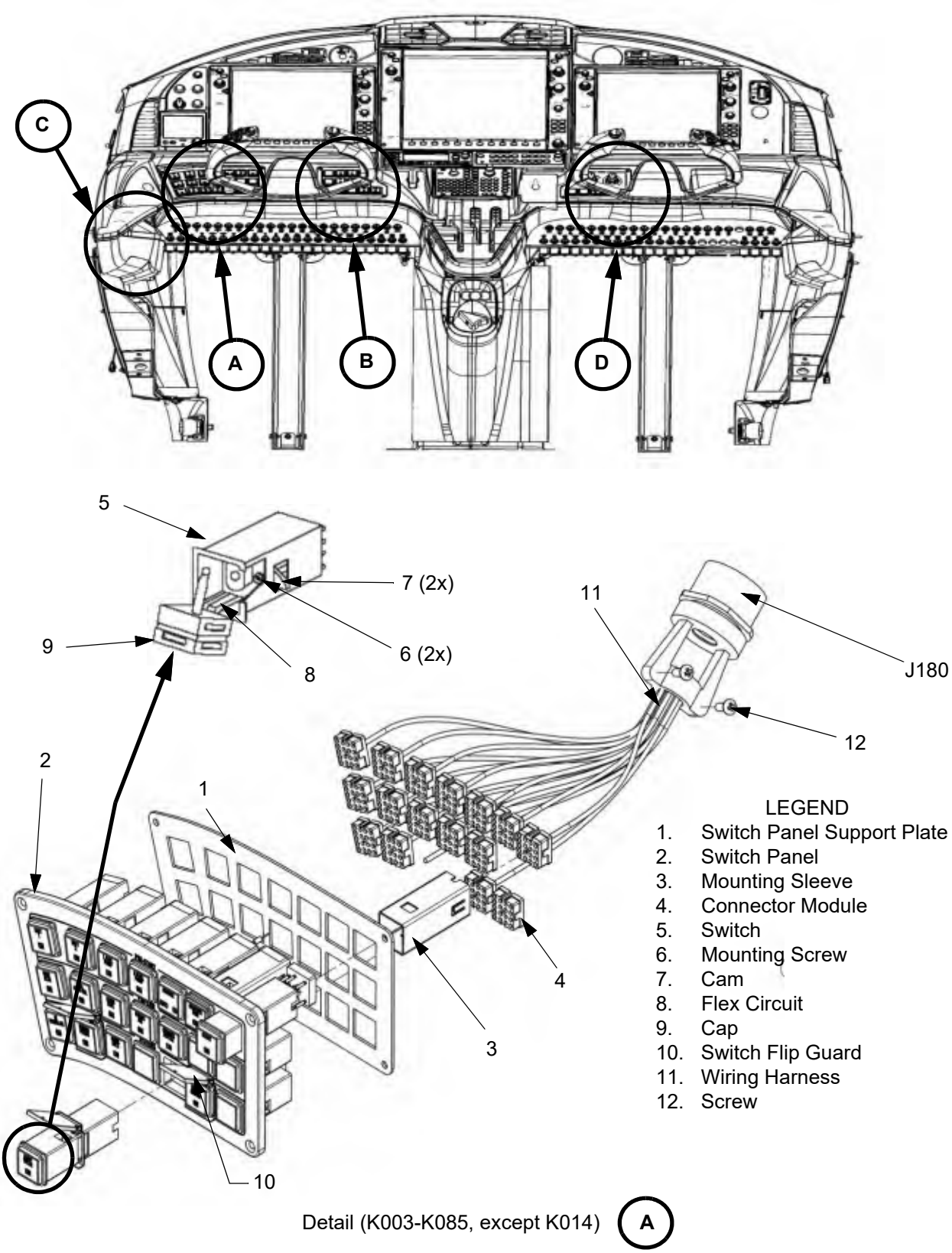

Figure 24-60.3: Switch Panels (Sheet 2 of 5)

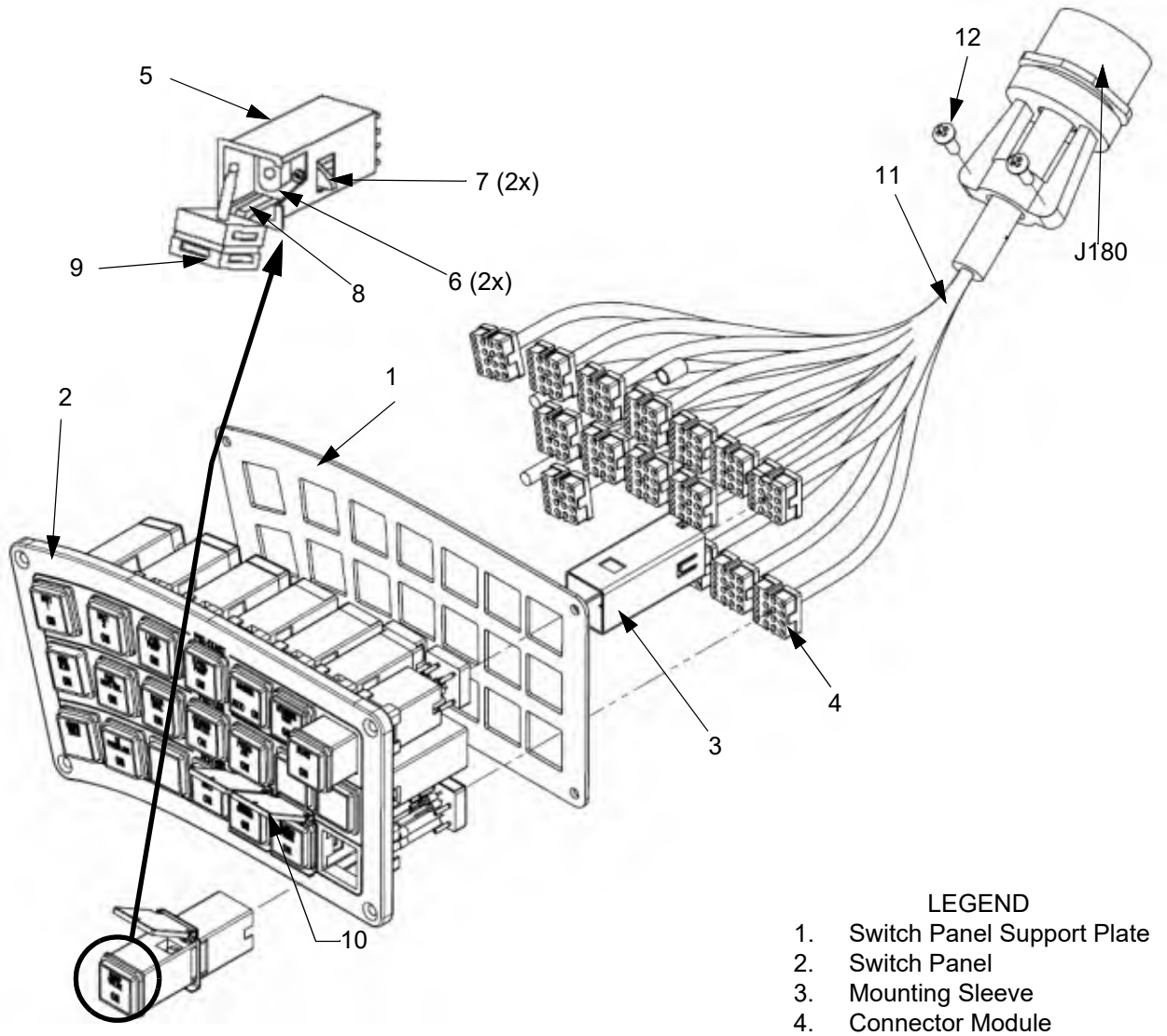

LEGEND

1. Switch Panel Support Plate
2. Switch Panel
3. Mounting Sleeve
4. Connector Module
5. Switch
6. Mounting Screw
7. Cam
8. Flex Circuit
9. Cap
10. Switch Flip Guard
11. Wiring Harness
12. Screw

Figure 24-60.2: Switch Panels (Sheet 3 of 5)

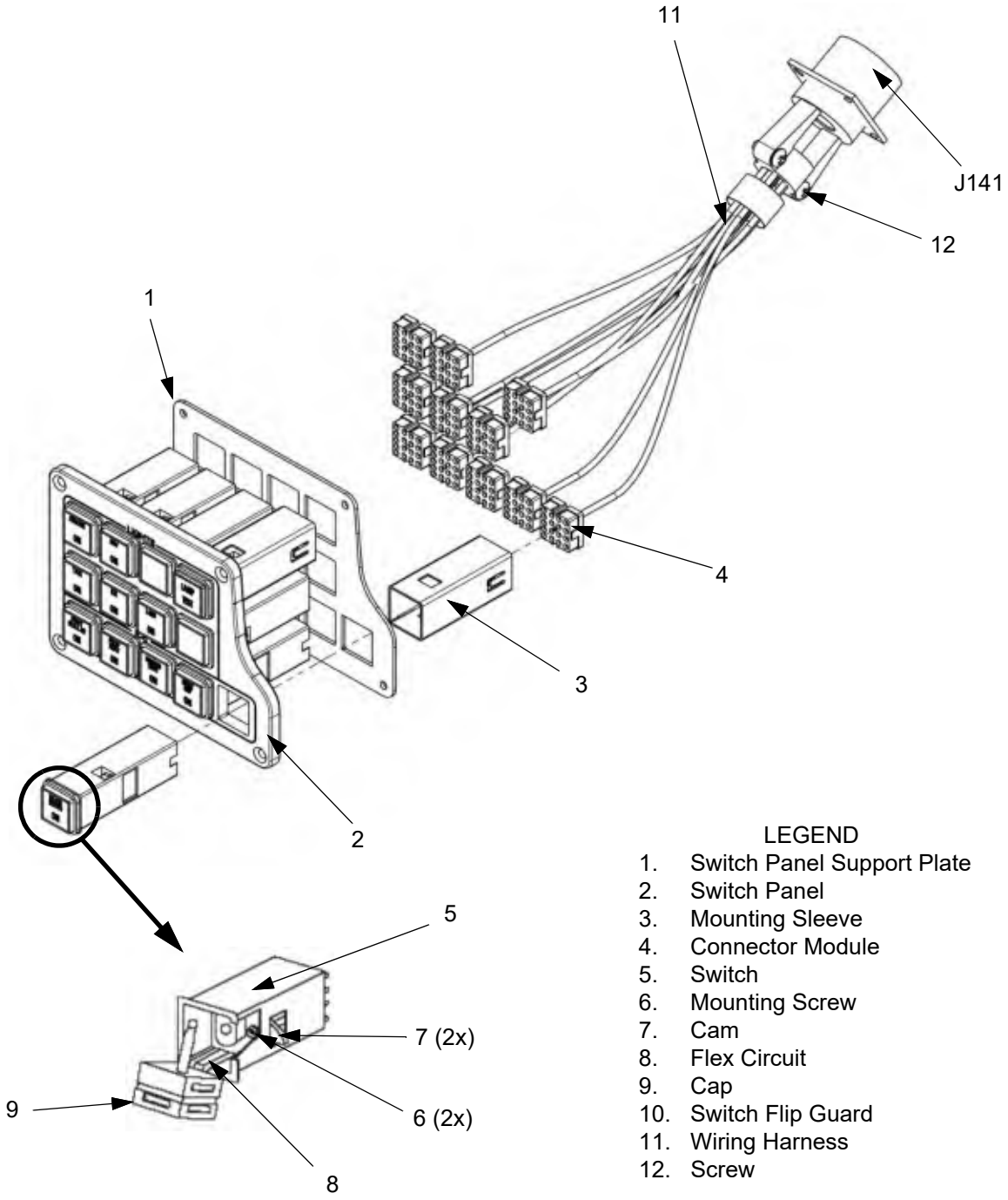

LEGEND

1. Switch Panel Support Plate
2. Switch Panel
3. Mounting Sleeve
4. Connector Module
5. Switch
6. Mounting Screw
7. Cam
8. Flex Circuit
9. Cap
10. Switch Flip Guard
11. Wiring Harness
12. Screw

Figure 24-60.2: Switch Panels (Sheet 4 of 5)

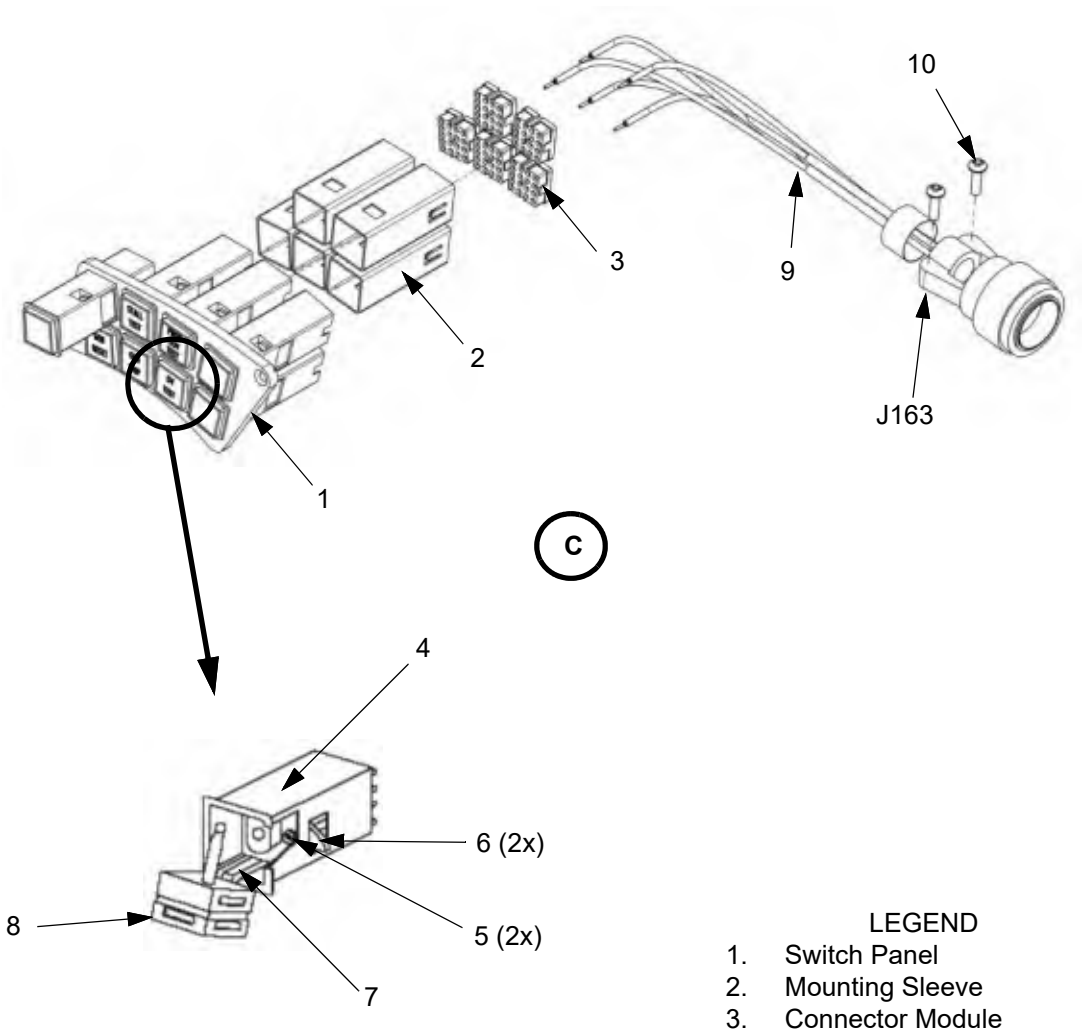

LEGEND

1. Switch Panel
2. Mounting Sleeve
3. Connector Module
4. Switch
5. Mounting Screw
6. Cam
7. Flex Circuit
8. Cap
9. Wiring Harness
10. Screw

Figure 24-60.2: Switch Panels (Sheet 5 of 5)

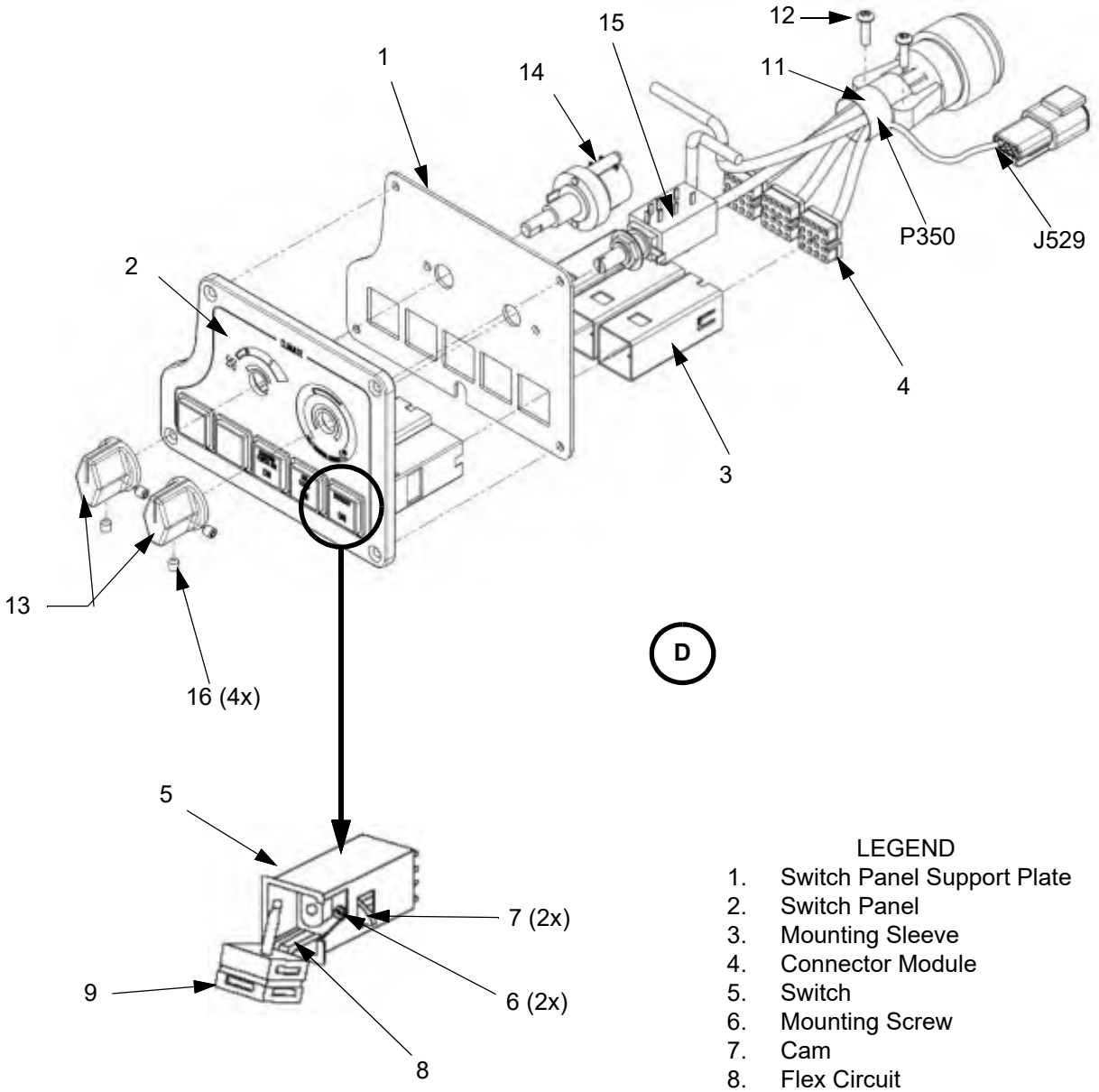

LEGEND

1. Switch Panel Support Plate
2. Switch Panel
3. Mounting Sleeve
4. Connector Module
5. Switch
6. Mounting Screw
7. Cam
8. Flex Circuit
9. Cap
10. Switch Flip Guard
11. Wiring Harness
12. Screw
13. Knob
14. Fan Switch
15. Potentiometer
16. Set Screw

Figure 24-60.4: Circuit Breaker Amperage

CIRCUIT SUMMARY		
Bus	System or Component	Circuit Breaker (Ampere)
Essential	STBY INST	5
	X-TIE	5
	PFD 1	5
	COM 1	5
	GPS/NAV 1	5
	ADAHRS 1	5
	XPDR 1	5
	HEADSETS	5
	AUDIO PANEL	5
	ENG INST	5
	NP/NG SENSE	5
	DE-ICE BOOTS	5
	L FUEL PUMP	10
	L FUEL PMP CTRL	5
	R FUEL PUMP	10
	R FUEL PMP CTRL	5
	SPS CMP 1A	5
	SPS CMP 2A	5
	GCU START	5
	ALTN FIELD	5
	ALTN SENSE	5
	IGNITER	5
	OXY PANEL	5
	PRESS CTRL 1	5
	PANEL LIGHTS	5
	PUSHER	5

CIRCUIT SUMMARY (Continued)		
Bus	System or Component	Circuit Breaker (Ampere)
Avionics	GEAR CTRL	5
	AUTO PILOT	5
	PFD 2	5
	MFD	5
	COM 2	5
	GPS/NAV 2	5
	ADAHRS 2	5
	XPDR 2	5
	AVIONICS FAN	5
	KEY PAD	5
	TAS	5
	XM WX	5
	PAX OXY	5
	FUEL AUTO SEL	5
	SPS CMP 1B	5
	SPS CMP 2B	5
	5V CONVERT	5
	12V CONVERT	15
	L PITOT HEAT	15
	L PITOT HT CTRL	5

CIRCUIT SUMMARY (Continued)		
Bus	System or Component	Circuit Breaker (Ampere)
Hot	AUTO LIGHTS	5
	DATA LINK 2	5
Accessory 1	AUTOTHROTTLE	5
	RUDDER LIMITER	5
	L STALL HEAT	10
	ELEV TRIM	5
	AIL TRIM	5
	RUD TRIM	5
	LEFT WOW	5
	RIGHT WOW	5
	WIN DIM (OPTION)	5
	ICE DETECTOR	5
	WSH HEAT	5
	AUTO BRAKE	5
	LAMP TEST	5
	PROP GOV	5
	AIR COND CTRL	5
	MASS FLOW	5
	CABIN TEMP	5
	DEFROST	5
	EMERG PRESS	5
	PRESS CTRL 2	5
	DATA LINK 1	5
	AUTO LAND	5

CIRCUIT SUMMARY (Continued)		
Bus	System or Component	Circuit Breaker (Ampere)
Accessory 2	INERT SEP	20
	FLAPS CTRL	5
	FLAPS	15
	R STALL HEAT	10
	R PITOT HEAT	5
	R PITOT HT CTRL	5
	NAV LIGHTS	5
	STROBE LIGHTS	5
	TAXI LIGHTS	5
	READ LIGHTS	5
	CABIN LIGHTS	5
	LAND LIGHTS	5
	ICE LIGHT	5
	FRESH AIR FAN	15
	FRESH AIR CTRL	5
	SAT TEL (OPTION)	5
	SAT TEL HEAT	5
	USB	5
	DOOR SEAL	5
	WEATHER RADAR (OPTION)	5
	STARLINK (OPTION)	5

CIRCUIT SUMMARY (Continued)		
Bus	System or Component	Circuit Breaker (Ampere)
Air Conditioning Compressor	Evaporator Module 1	15
	Evaporator Module 2	15
	Compressor Module	100

C. 5V Output Voltage Step Down Converter

The 5V output voltage step down converter changes 28 VDC electrical current to 5 VDC electrical current that is delivered to USB ports conveniently located in the airplane cabin. These USB ports are then used by crew members and passengers to power any personal electronic devices they might have suitable to that power source.

(1) Removal

(a) Remove PFD 2 (refer to Chapter 34-40).

(b) Remove the locknuts and washers that attach the controller to the instrument panel.

(c) Carefully pull the step down converter forward then disconnect the wiring harness.

(d) Remove the converter.

(2) Installation

(a) Inspect the wiring connectors to ensure there are no bent or damaged pins. Repair any damage.

(b) Connect the wiring harness to the back of the step down converter.

(c) Attach the converter to the instrument panel using washers and locknuts.

(d) Install PFD 2 (refer to Chapter 34-40).

(e) Make sure power is available at the USB ports.

Figure 24-60.5: 5V Step Down Converter

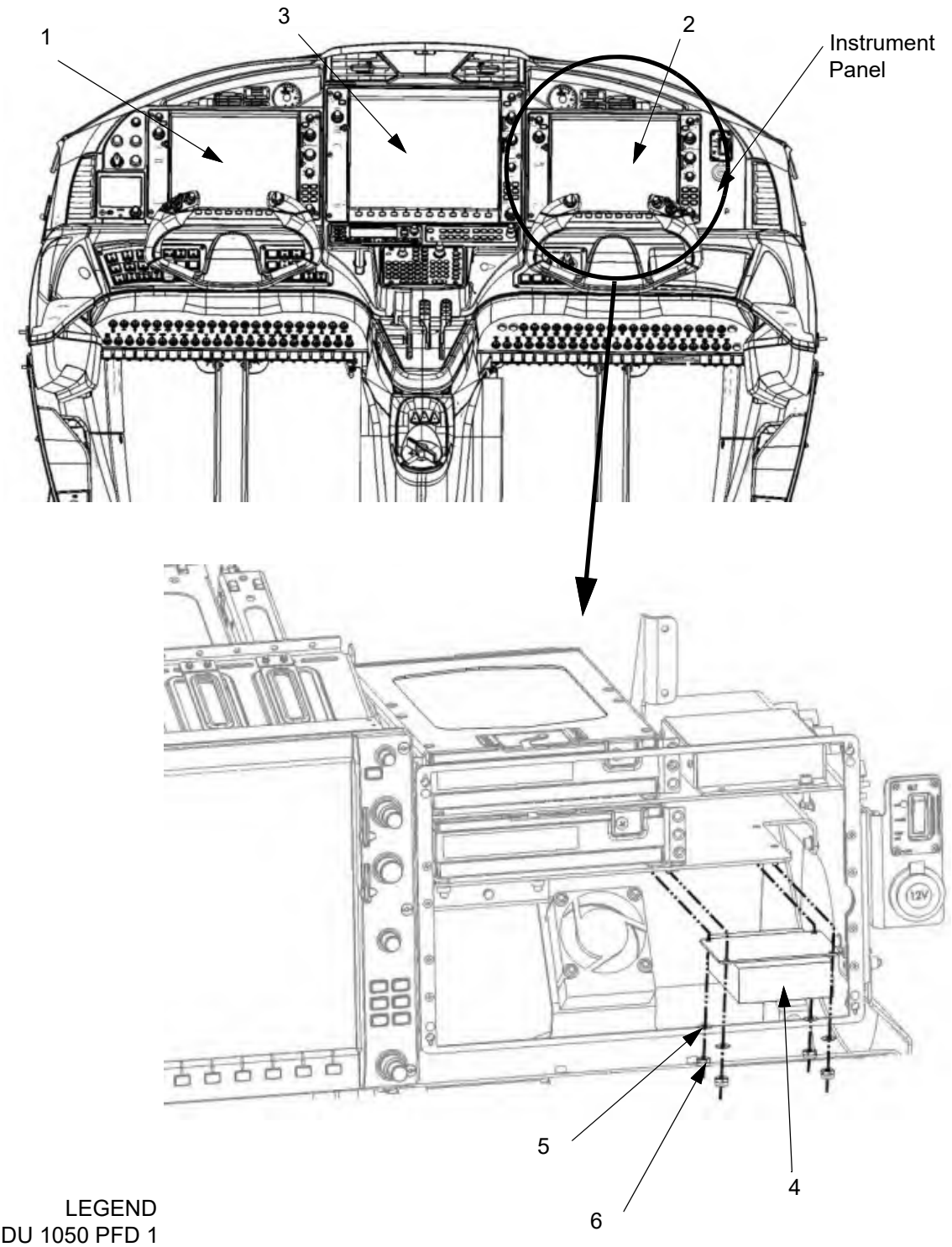

LEGEND

1. GDU 1050 PFD 1
2. GDU 1050 PFD 2
3. GDU 1250 MFD
4. 5V Step Down Converter
5. Washer
6. Locknut

This Page Intentionally Left Blank

CHAPTER 25

Equipment and Furnishings

This Page Intentionally Left Blank

List of Effective Pages

Chapter/Section	Page Number	Effective Date
25-Title	Page 1	02 Jan 2020
25-Title	Page 2	02 Jan 2020
25-LOEP	Page 1	20 Oct 2023
25-LOEP	Page 2	20 Oct 2023
25-TOC	Page 1	16 May 2022
25-TOC	Page 2	02 Jan 2020
25-00	Page 1	13 Apr 2020
25-00	Page 2	02 Jan 2020
25-10	Page 1	02 Jan 2020
25-10	Page 2	14 Jul 2021
25-10	Page 3	14 Jul 2021
25-10	Page 4	14 Jul 2021
25-10	Page 5	14 Jul 2021
25-10	Page 6	02 Jan 2020
25-10	Page 7	10 Jul 2025
25-10	Page 8	10 Jul 2025
25-10	Page 9	10 Jul 2025
25-10	Page 10	10 Jul 2025
25-10	Page 11	10 Jul 2025
25-10	Page 12	10 Jul 2025
25-10	Page 13	10 Jul 2025
25-10	Page 14	10 Jul 2025
25-10	Page 15	10 Jul 2025
25-10	Page 16	10 Jul 2025
25-10	Page 17	10 Jul 2025
25-10	Page 18	10 Jul 2025
25-10	Page 19	10 Jul 2025
25-10	Page 20	10 Jul 2025
25-10	Page 21	10 Jul 2025
25-10	Page 22	10 Jul 2025
25-10	Page 23	10 Jul 2025
25-10	Page 24	10 Jul 2025
25-20	Page 1	20 Oct 2023
25-20	Page 2	20 Oct 2023
25-20	Page 3	20 Oct 2023
25-20	Page 4	20 Oct 2023
25-20	Page 5	20 Oct 2023
25-20	Page 6	20 Oct 2023
25-20	Page 7	20 Oct 2023

25-20 ..... Page 8 ..... 20 Oct 2023
25-20 ..... Page 9 ..... 20 Oct 2023
25-20 ..... Page 10 ..... 20 Oct 2023
25-20 ..... Page 11 ..... 20 Oct 2023
25-20 ..... Page 12 ..... 20 Oct 2023
25-20 ..... Page 13 ..... 20 Oct 2023
25-20 ..... Page 14 ..... 10 Jul 2025
25-20 ..... Page 15 ..... 10 Jul 2025
25-20 ..... Page 16 ..... 10 Jul 2025
25-20 ..... Page 17 ..... 10 Jul 2025
25-20 ..... Page 18 ..... 10 Jul 2025
25-20 ..... Page 19 ..... 10 Jul 2025
25-20 ..... Page 20 ..... 10 Jul 2025
25-20 ..... Page 21 ..... 10 Jul 2025
25-20 ..... Page 22 ..... 10 Jul 2025
25-20 ..... Page 23 ..... 10 Jul 2025
25-20 ..... Page 24 ..... 10 Jul 2025
25-20 ..... Page 25 ..... 10 Jul 2025
25-20 ..... Page 26 ..... 10 Jul 2025

25-50 ..... Page 1 ..... 02 Jan 2020
25-50 ..... Page 2 ..... 02 Jan 2020
25-50 ..... Page 3 ..... 16 May 2022
25-50 ..... Page 4 ..... 02 Jan 2020

25-60 ..... Page 1 ..... 02 Jan 2020
25-60 ..... Page 2 ..... 02 Jan 2020
25-60 ..... Page 3 ..... 02 Jan 2020
25-60 ..... Page 4 ..... 02 Jan 2020
25-60 ..... Page 5 ..... 11 Nov 2020
25-60 ..... Page 6 ..... 02 Jan 2020

25-80 ..... Page 1 ..... 02 Jan 2020
25-80 ..... Page 2 ..... 02 Jan 2020
25-80 ..... Page 3 ..... 02 Jan 2020
25-80 ..... Page 4 ..... 02 Jan 2020
25-80 ..... Page 5 ..... 02 Jan 2020
25-80 ..... Page 6 ..... 02 Jan 2020
25-80 ..... Page 7 ..... 02 Jan 2020
25-80 ..... Page 8 ..... 02 Jan 2020
25-80 ..... Page 9 ..... 02 Jan 2020
25-80 ..... Page 10 ..... 02 Jan 2020
25-80 ..... Page 11 ..... 02 Jan 2020
25-80 ..... Page 12 ..... 02 Jan 2020
25-80 ..... Page 13 ..... 02 Jan 2020
25-80 ..... Page 14 ..... 02 Jan 2020

CHAPTER 25

Table of Contents

List of Effective Pages ..... 25-LOEP / Page 1
Table of Contents ..... 25-TOC / Page1

Paragraph **Page Number**

Equipment and Furnishings

1. General ..... 25-00 / Page 1

Flight Compartment

1. Description ..... 25-10 / Page 1
2. Maintenance Practices ..... 25-10 / Page 1
   - A. Crew Seats ..... 25-10 / Page 1
   - B. Crew Seat Rails ..... 25-10 / Page 2
   - C. Pedestal Finish Panels ..... 25-10 / Page 4
   - D. Instrument Panel Bezels ..... 25-10 / Page 10
   - E. Carpet ..... 25-10 / Page 14
   - F. Spar Box Panel ..... 25-10 / Page 14
   - G. Crew Lower Finish Panels ..... 25-10 / Page 16
   - H. Crew Upper Finish Panels ..... 25-10 / Page 18
   - I. Glare Shield ..... 25-10 / Page 18
   - J. Sun Visors ..... 25-10 / Page 24

Passenger Compartment

1. Description ..... 25-20 / Page 1
2. Maintenance Practices ..... 25-20 / Page 1
   - A. Passenger Seats ..... 25-20 / Page 1
   - B. Passenger Seat Rails ..... 25-20 / Page 2
   - C. Carpet ..... 25-20 / Page 5
   - D. Valences ..... 25-20 / Page 5
   - E. Seat Rail Covers ..... 25-20 / Page 5
   - F. Threshold ..... 25-20 / Page 6
   - G. Overhead Finish Panels ..... 25-20 / Page 10
   - H. AC Turn Duct Access Panel ..... 25-20 / Page 11
   - I. Upper Finish Panels ..... 25-20 / Page 15
   - J. Lower Finish Panels ..... 25-20 / Page 18

Cargo Compartment

1. Description ..... 25-50 / Page 1
2. Maintenance Practices ..... 25-50 / Page 1
   A. Cargo Net ..... 25-50 / Page 1
   B. Aft Pressure Bulkhead Finish Panel ..... 25-50 / Page 3
   C. Cargo Compartment Floor Bucket ..... 25-50 / Page 5

Emergency Equipment

1. Description ..... 25-60 / Page 1
2. Maintenance Practices ..... 25-60 / Page 1
   A. Emergency Locator Transmitter (ELT) ..... 25-60 / Page 1
   B. ELT Remote Control Panel (RCP) ..... 25-60 / Page 3
   C. ELT Antenna (ANT AV 300) ..... 25-60 / Page 3
3. Troubleshooting ..... 25-60 / Page 3

Insulation

1. Description ..... 25-80 / Page 1
2. Maintenance Practices ..... 25-80 / Page 1
   A. Insulation ..... 25-80 / Page 1
   B. Sound Damper on the Fuselage ..... 25-80 / Page 4
   C. Sound Damper on the Interior Finish Panels ..... 25-80 / Page 11
   D. Sound Damper on the Cargo Compartment Floor ..... 25-80 / Page 15
   E. Sound Damper on the Mid Row Seat Rail Covers ..... 25-80 / Page 16

EQUIPMENT AND FURNISHINGS

1. General

The airplane interior equipment and furnishings are cabin and cockpit seating, seat belts, carpet, interior panels, trim, center and side console panels, emergency equipment, and the baggage compartment.

This Page Intentionally Left Blank

FLIGHT COMPARTMENT

1. Description

The airplane has two individual front seats (crew) for the pilot and the copilot with four individual rear seats for the passengers.

The position of the crew seats can be adjusted front to back and up and down. The backrest is tilt adjustable. The seat harnesses provide four point restraint with an inertial reel integral to the seat and attached to the shoulder straps.

2. Maintenance Practices

A. Crew Seats

(1) Removal

(a) Remove the mid row passenger seat(s).

(b) Ensure the pilot and copilot oxygen masks are disconnected from the oxygen outlets in the cockpit floor.

(c) Remove the seat stop assemblies from the forward ends of the outboard seat rail(s).

Note: Seat stop assemblies are only installed on the outboard rails of both seats.

(d) Slide the seat(s) forward until the forward seat feet exit the rails. Keep sliding the seat forward until the aft seat feet line up with the aft exit holes in the rails then remove the seat.

Note: Do not try to push the aft seat feet past this to exit out the forward end of the seat rail because there could be interference.

(2) Installation

(a) Slide all four of the seat feet into the seat rails. Each foot must be fully engaged inside the rail.

(b) Secure the seat by engaging the seat locking pin into the rail.

(c) Install a seat stop assembly into the second from the last engagement pin hole in the forward end of the outboard seat rails. Apply Loctite™ 222 to the screw threads before installation.

(d) Connect the oxygen masks to the oxygen outlets in the cockpit floor.

(3) Inspection

(a) Verify condition and security of the seat rails and seat stop assemblies.

(b) Verify operation of the seat forward and aft adjustment in all positions.
(c) Verify operation of the seat up and down adjustment in all positions.
(d) Verify operation of the seat backrest adjustment in all positions.
(e) Verify operation of the headrests in all positions.

B. Crew Seat Rails

Refer to Chapter 53-40.

Figure 25-10.1: Crew Seats

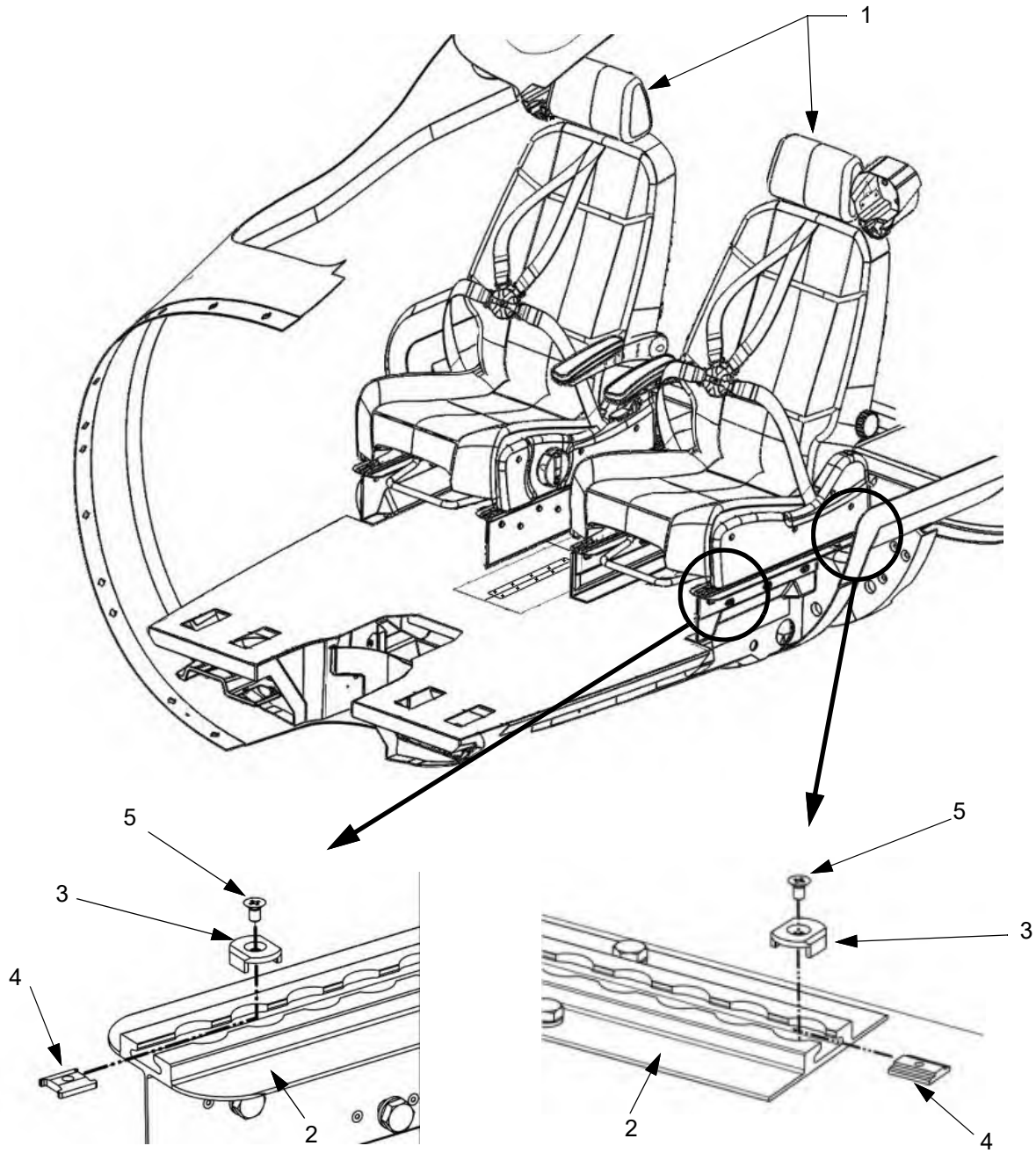

Seat Stop Assembly Detail

LEGEND

1. Crew Seats
2. Seat Rail
3. Stop Tab
4. Rail Nut
5. Screw

Note: Seat stops are installed on the outboard rails of the pilot and copilot seats only

C. Pedestal Finish Panels

(1) Removal

(a) Remove the (4) screws attaching the pedestal main body panel to the pedestal then separate the dual lock re-closable fasteners and remove the panel.

(b) Remove the grips from the condition and propeller levers.

(c) Remove the (3) screws attaching the face panel and closeout panel to the power quadrant.

(d) Carefully lift the FMS bezel enough to allow the face panel to be removed, and remove the face panel.

(e) Remove the yaw damper control from the face panel.

(f) Remove the knobs from the control lever friction adjusters.

(g) Remove the fuel valve control knob and light plate assembly.

(h) Remove the bolt, washer, (2) screws, dimpled washers, washers, and locknuts attaching the fuel selector cover panel to the pedestal then remove the fuel selector cover panel.

(i) Remove the (4) inboard screws from the left and right circuit breaker lower trim panels.

(j) Remove the remaining (4) screws and dimpled washers attaching the left and right side trim panels to the pedestal then remove the panels.

(k) Remove the (4) socket head screws and washers attaching the power quadrant surround to the power quadrant then separate the dual lock re-closable fasteners and remove the surround.

(2) Installation

(a) Install the power quadrant surround using four socket head screws and washers. Press against the surround to connect the dual lock re-closable fasteners.

(b) Put the fuel selector surround into position and attach the surround to the pedestal using (2) screws, dimpled washers, bolt, and washer.

(c) Put the left and right side trim panels in position. Make sure the flanges are under the circuit breaker lower trim panels.

(d) Install the (4) inboard screws from the left and right circuit breaker lower trim panels.

(e) Attach the left and right side trim panels to the pedestal and fuel selector surround using (6) screws and dimpled washers.

(f) Attach the pedestal main body panel to the pedestal using the (4) screws. Press against the pedestal to connect the dual lock re-closable fasteners.

(g) Install the yaw damper potentiometer in the face panel.

(h) Carefully lift the FMS bezel enough to allow the face panel to be put in position. then put the face panel in position.

(i) Put the face panel in position and install the (3) screws attaching the face panel and closeout panel to the power quadrant.

(j) Install the fuel valve control knob and light plate assembly.

(k) Install the control lever tension adjuster knobs.

(l) Install the yaw damper knob.

(m) Install the grips to the condition, and prop levers.

Figure 25-10.2: Pedestal Finish Panels (Sheet 1 of 4)

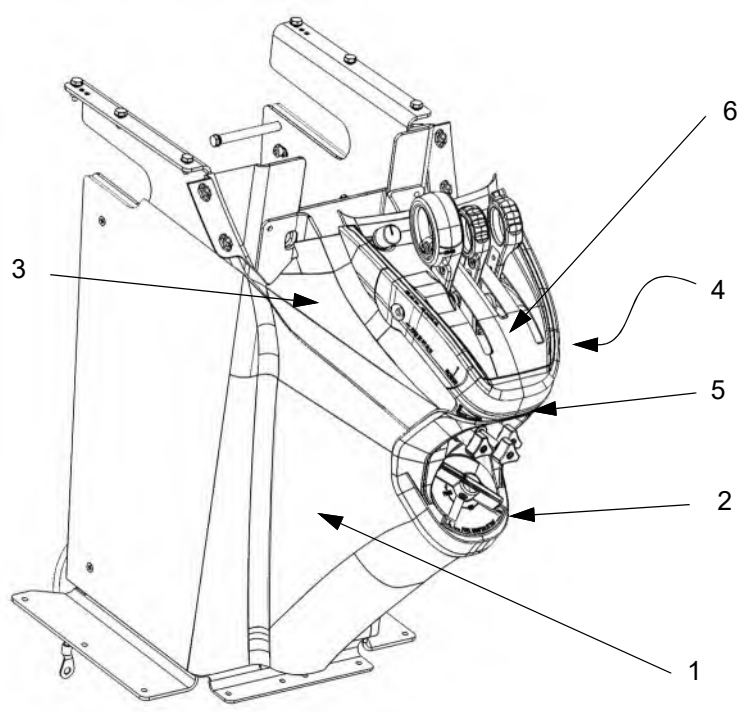

LEGEND

1. Main Body Panel
2. Fuel Selector Cover Panel
3. Side Trim Panel, Left
4. Side Trim Panel, Right
5. Power Quadrant Surround
6. Power Quadrant Face Panel
7. Screw

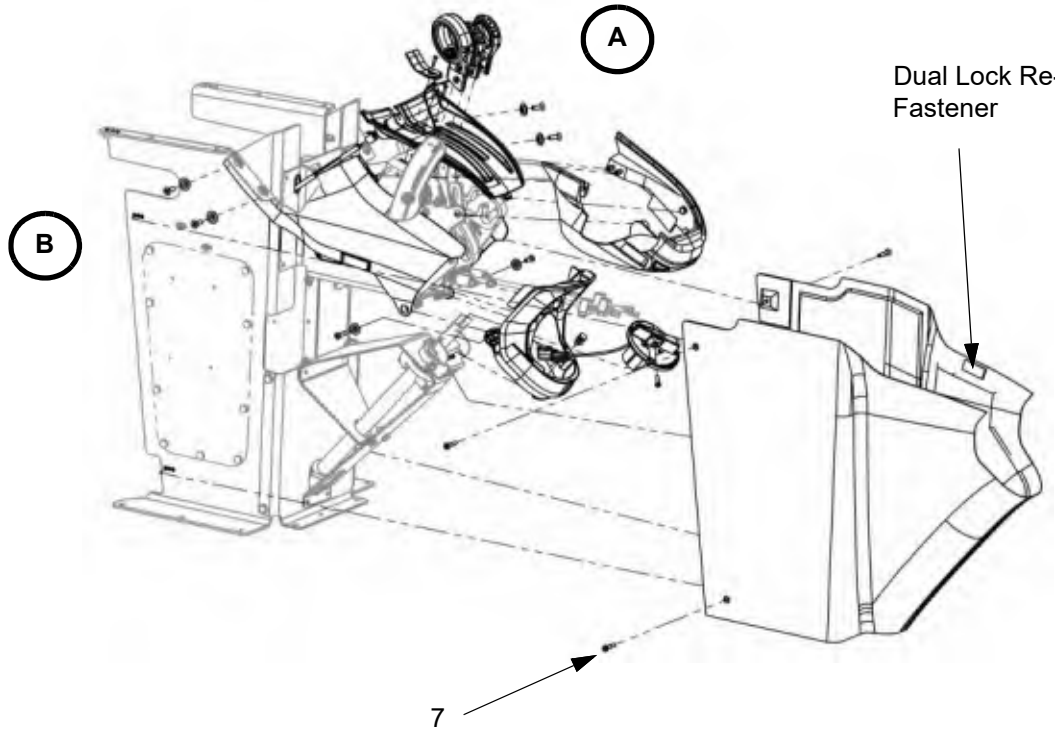

Figure 25-10.3: Pedestal Finish Panels (2 of 4)

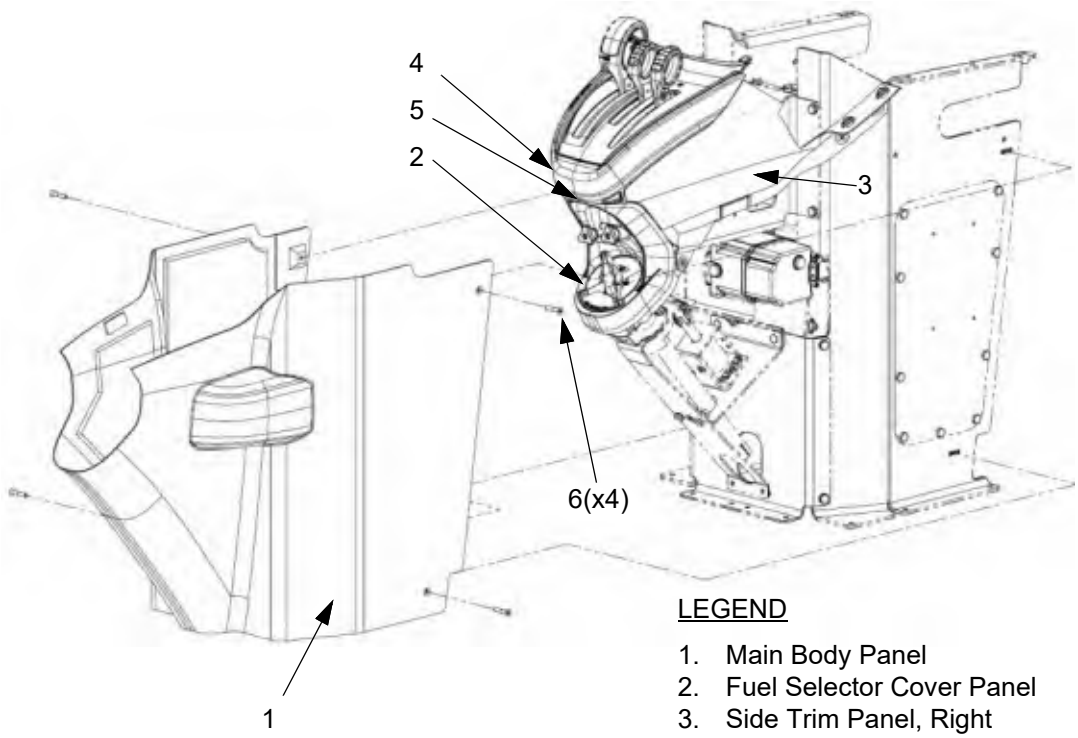

LEGEND

1. Main Body Panel
2. Fuel Selector Cover Panel
3. Side Trim Panel, Right
4. Power Quadrant Surround
5. Power Quadrant Face Panel
6. Screw

Figure 25-10.2: Pedestal Finish Panels (Sheet 3 of 4)

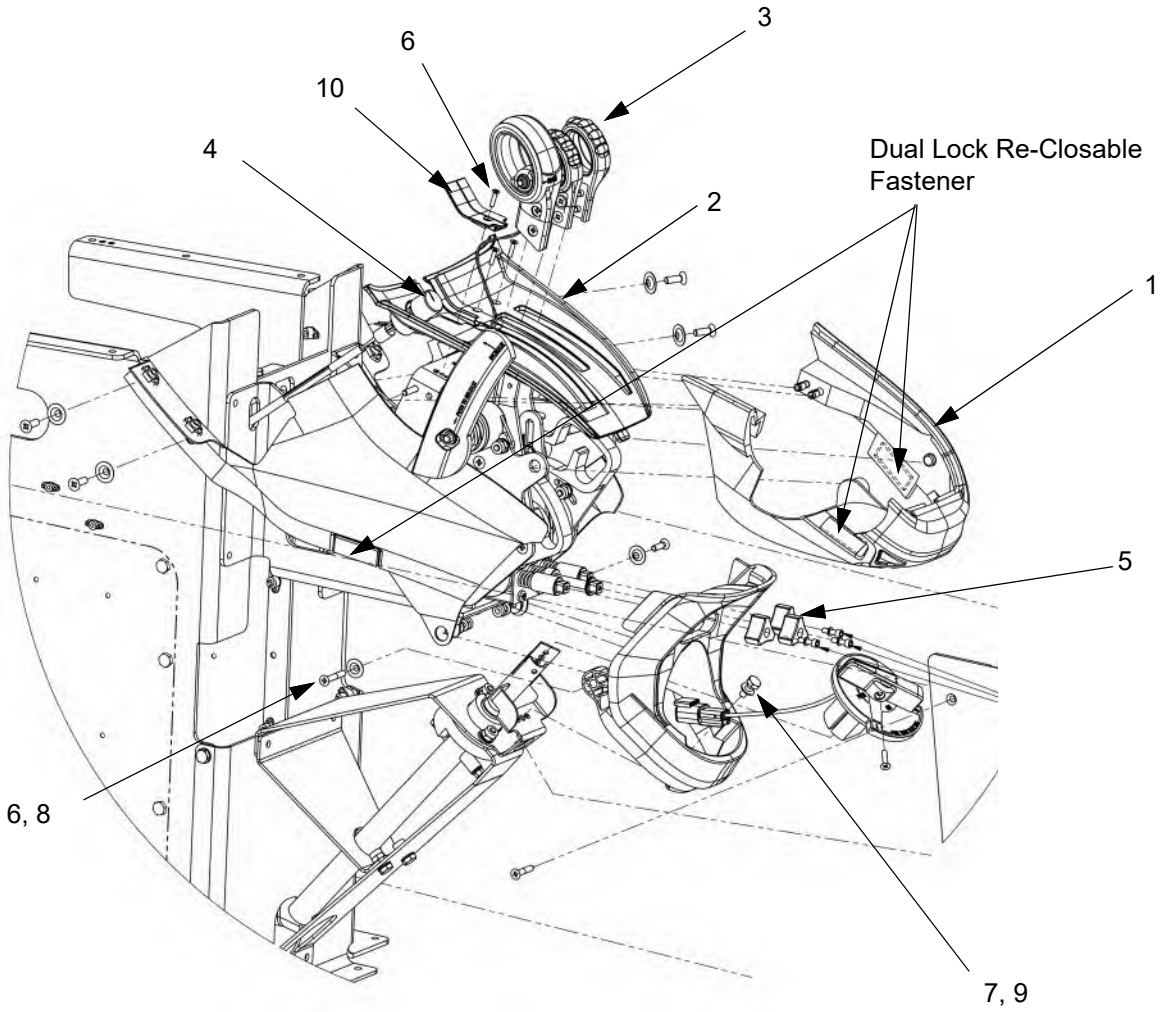

LEGEND

1. Power Quadrant Surround
2. Power Quadrant Face Panel
3. Propeller and Condition Levers
4. Yaw Damper Knob
5. Lever Tensioner Knob
6. Screw
7. Bolt
8. Dimpled Washer
9. Washer
10. Closeout Panel
11. Fuel Valve Control Knob/Light Plate Assembly

Figure 25-10.2: Pedestal Finish Panels (Sheet 4 of 4)

The left trim panel is shown.
The right trim panel is similar.

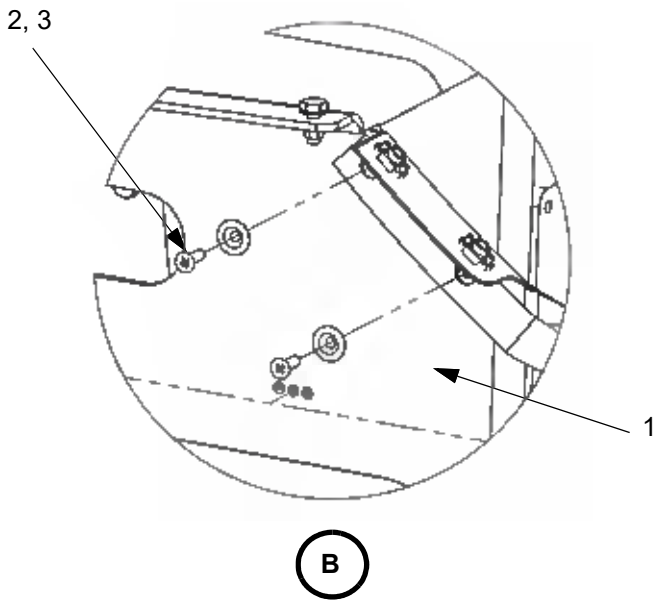

LEGEND

1. Side Trim Panel, Left
2. Screw
3. Dimpled Washer

D. Instrument Panel Bezels

(1) Removal

(a) Remove the center display bezel as follows:

(i) Remove the glare shield (refer to chapter 25-10.I).
(ii) Remove the flap selector handle (refer to Chapter 27-50).
(iii) Remove the Garmin 1250 MFD (refer to Chapter 34-40).
(iv) Remove the Garmin GDU 477 FMS (refer to Chapter 34-40).
(v) Remove the autopilot control head (refer to Chapter 22-10 or 22-11).
(vi) Remove the Garmin GMA 350 audio panel (refer to Chapter 23-50).
(vii) Carefully cut the sealant that attaches the ducts to the center vents (SN: K004-K010 only).
(viii) Disconnect the ducts from the center vents.
(ix) Remove the eight screws that attach the MFD mount and center display bezel to the instrument panel structure. Remove the MFD mount.
(x) Remove the four screws that attach the FMS mount and center display bezel to the instrument panel structure. Remove the FMS mount.
(xi) Carefully pull the center display bezel aft and disconnect the landing gear handle electrical connector.
(xii) Remove the center display bezel.

(b) Remove the left display bezel as follows:

(i) Remove the center display bezel (refer to Chapter 25-10.D(1)(a).
(ii) Remove the pilot's Garmin 1050 PFD (refer to Chapter 34-40).
(iii) Remove the standby instrument (refer to Chapter 34-20).
(iv) Remove the eight screws that attach the PFD mount and left display bezel to the instrument panel structure.
(v) Remove the four screws that attach the left wedge display tunnel to the left wedge display.

Note: The wedge display will sit loosely but held in place by the AoA indicator until installation.

(vi) Loosen the clamp to disconnect the duct from the side vent.
(vii) Remove the left display bezel by carefully moving it aft.

(c) Remove the right display bezel as follows:

(i) Remove the center display bezel (refer to Chapter 25-10.D(1)(a).
(ii) Remove the co-pilot's Garmin 1050 PFD (refer to Chapter 34-40).
(iii) Remove the eight screws that attach the PFD mount and right display bezel to the instrument panel structure.
(iv) Remove the four screws that attach the right wedge display tunnel to the left wedge display.

Note: The wedge display will sit loosely but held in place by the AoA indicator until installation.

(v) Loosen the clamp to disconnect the duct from the side vent.
(vi) Disconnect the 12 volt DC power outlet and ELT remote panel.
(vii) Remove the right display bezel by carefully moving it aft.

(d) Remove the pilot's switch panel bezel as follows:

(i) Remove the test switch panel (refer to Chapter 24-60).
(ii) Remove the left switch panel (refer to Chapter 24-60).
(iii) Remove the right switch panel (refer to Chapter 24-60).
(iv) Carefully lift the pilot's switch panel bezel up and aft to clear the yoke.
(v) Remove the pilot's switch panel bezel.
(vi) Remove the pilot's switch panel trim.

(e) Remove the co-pilot's switch panel bezel as follows:

(i) Remove the climate panel (refer to Chapter 24-60).
(ii) Remove the right snap-in cover assembly and traction pad from the co-pilot's switch panel bezel to access the bezel mounting screws.
(iii) Remove the three screws that attach the co-pilot's bezel to the instrument panel structure.
(iv) Carefully lift the pilot's switch panel bezel up and aft to clear the yoke.
(v) Remove the co-pilot's switch panel bezel.
(vi) Remove the co-pilot's switch panel trim

(2) Installation is the reverse of removal.

Note: Use new MS24693-S6 screws when reinstalling the PFD, MFD, and FMS mounts, and bezels.

Note: Re seal the ducts to the center vents with RTV 100 (SN: K004-K010 only).

Figure 25-10.4: Instrument Panel Bezels (Sheet 1 of 3)

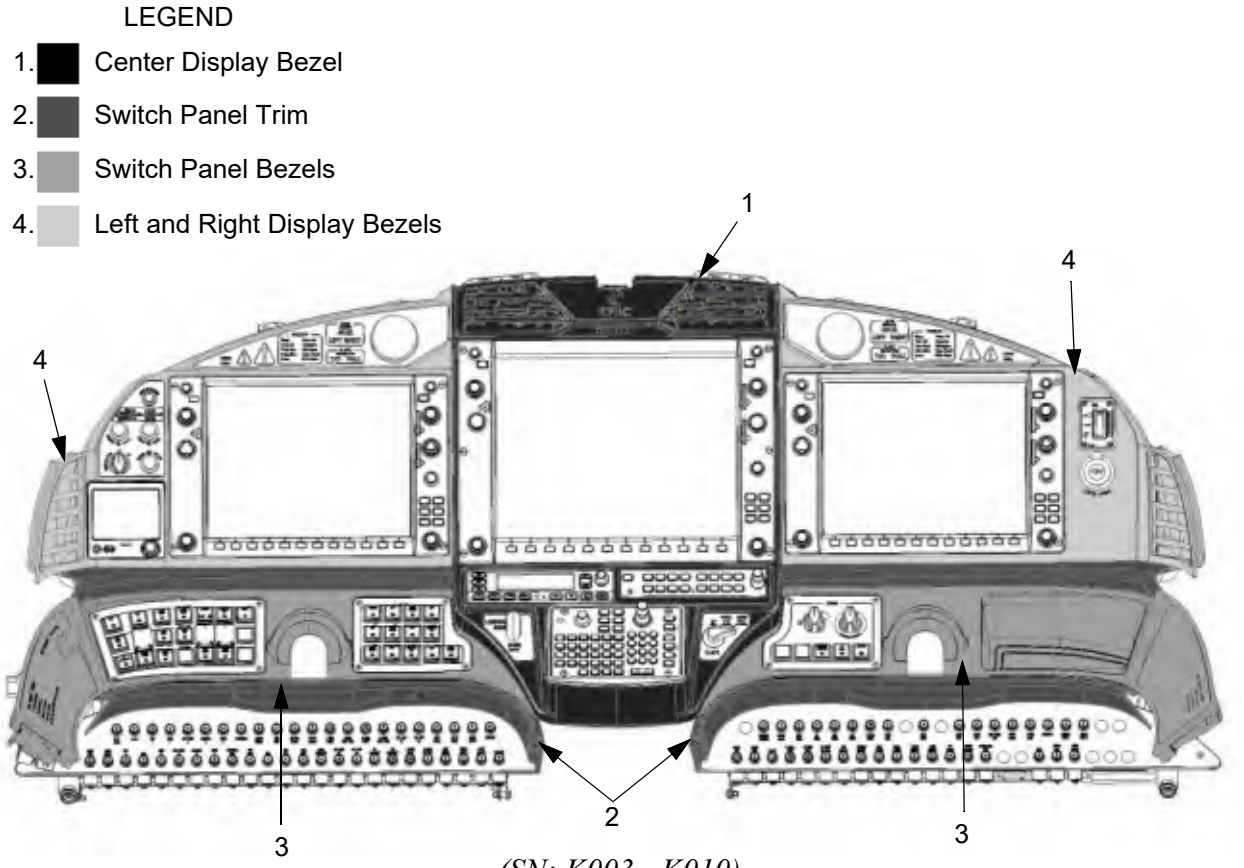

(SN: K003 - K010)

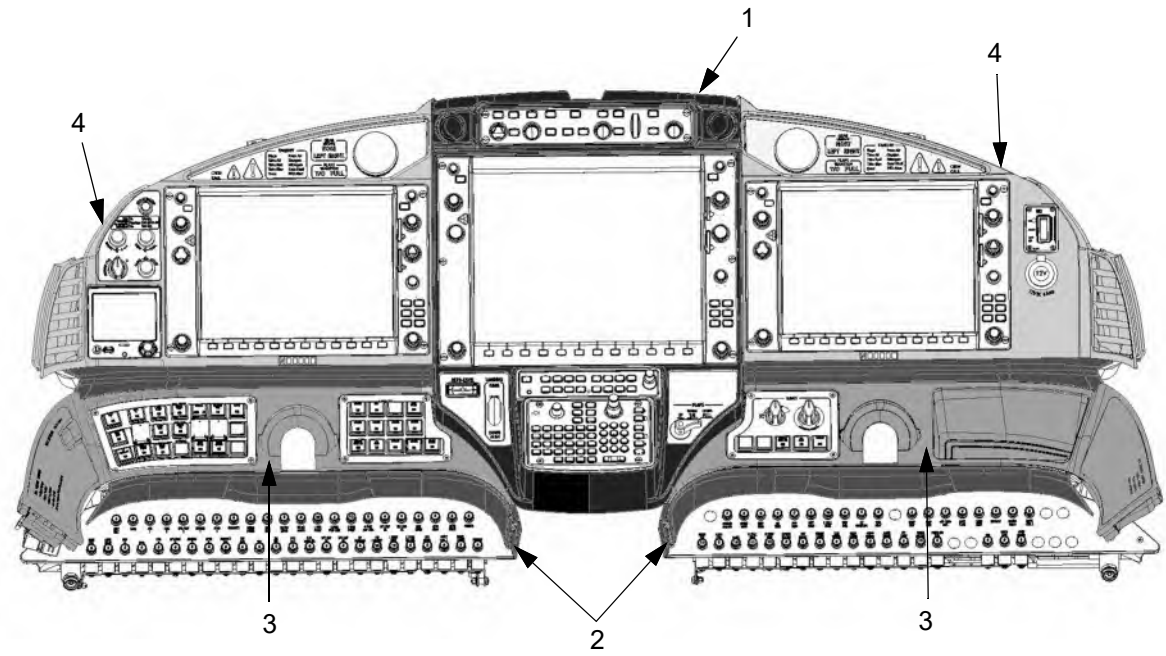

(SN: K011-K085, except K014, and K003 - K010 with SB-0017)

Figure 25-10.5: Instrument Panel Bezels (Sheet 2 of 3)

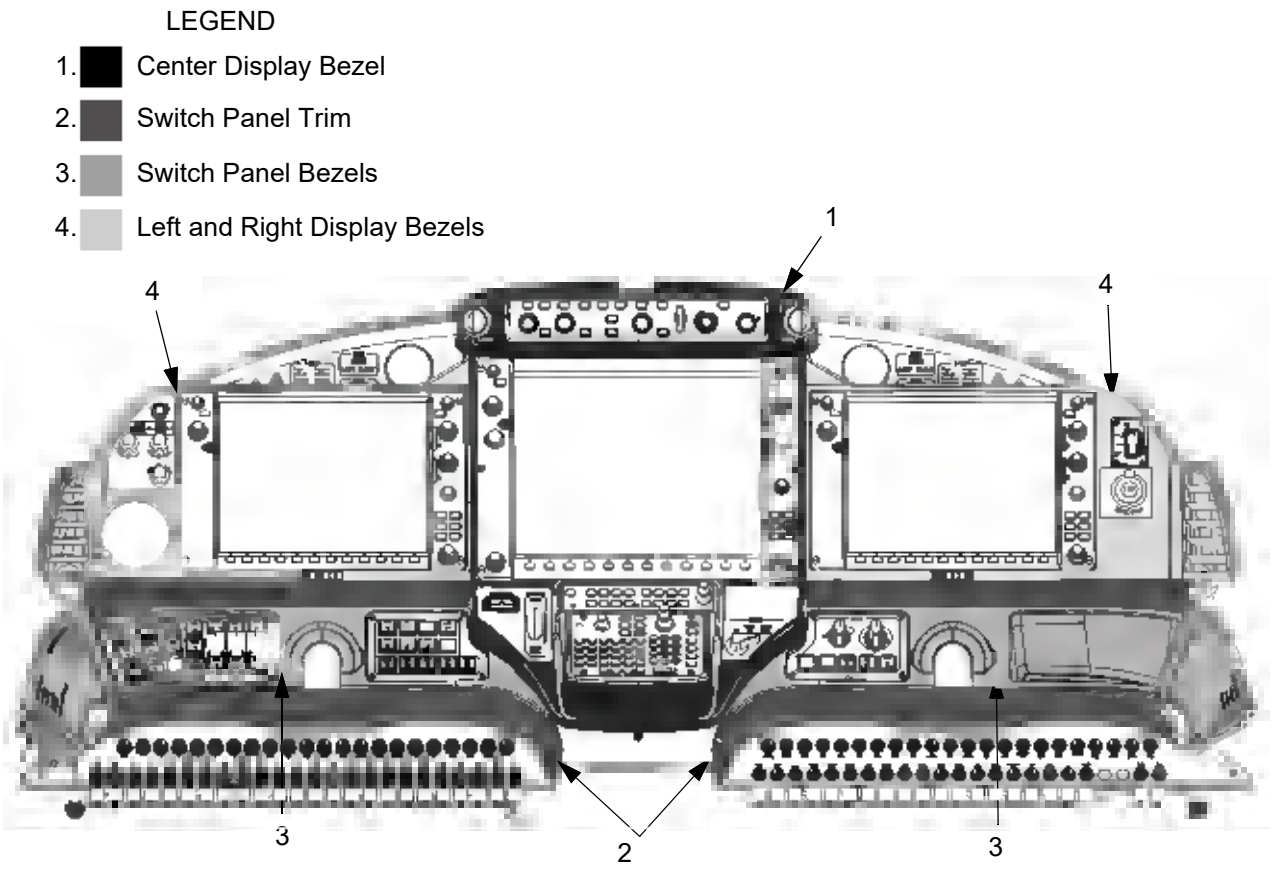

(SN: K014, K086 and On)

Figure 25-10.3: Instrument Panel Bezels (Sheet 3 of 3)

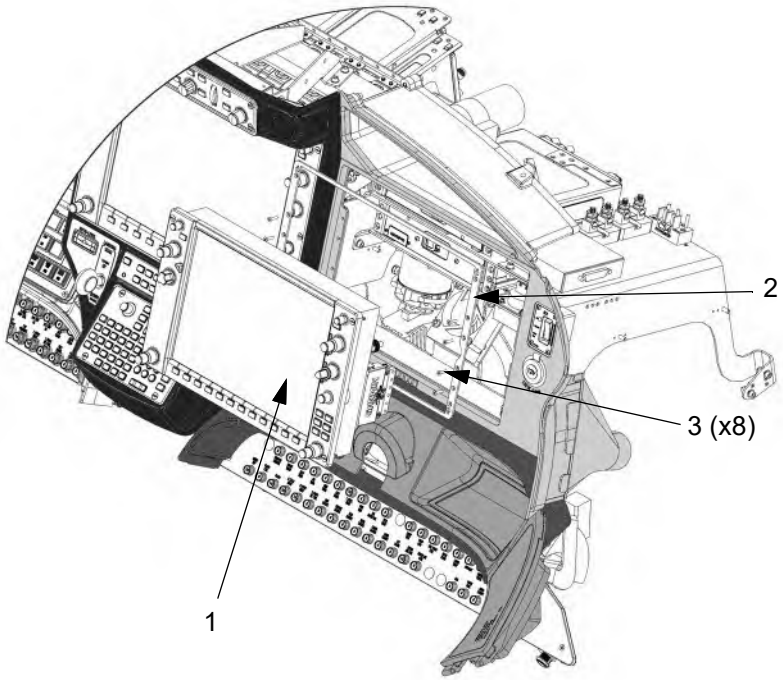

(Co-pilot's PFD shown, Pilot's PFD, MFD, and FMS are similar.)

LEGEND

1. Co-pilot's PFD
2. PFD Mount
3. Screw
4. Traction pad
5. Snap-In Cover

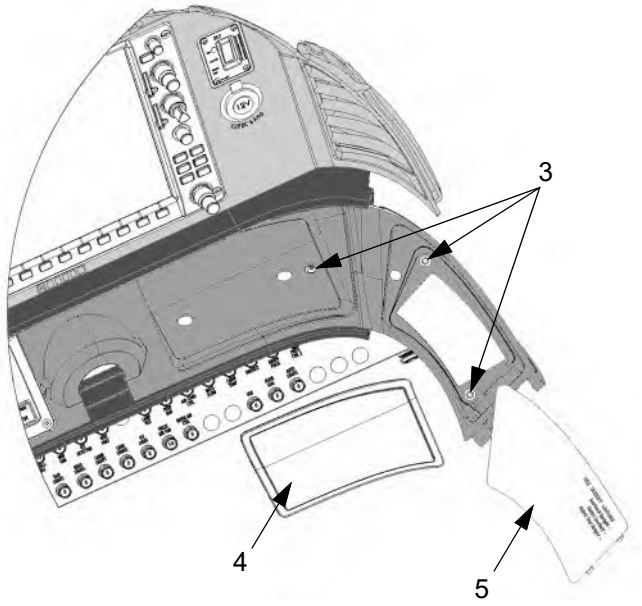

E. Carpet

The carpet pad has been bonded to the back of the carpet using adhesive. The carpet pad is attached to the sound damping material of the floor using flame retardant double coated cloth tape.

For installation of new carpet, the new carpet pad is installed first using flame retardant double coated cloth tape then the carpet is bonded to the pad using adhesive.

(1) Removal

(a) Remove the panel trim from the front of the recessed fire extinguisher enclosure.

(b) Grasp the carpet and pad at a corner or an edge then pull it from the floor.

(2) Installation

(a) Move the carpet into position then press it into place. Apply flame retardant double coated cloth tape to the underside of the carpet pad as required.

(b) Install the panel trim to the front of the recessed fire extinguisher enclosure.

F. Spar Box Panel

(1) Removal

(a) Grasp the panel at a corner or an edge then pull it away from the dual lock re-closable fasteners attaching it to the spar box.

(2) Installation

(a) Hold the panel in position against the spar box.

(b) Press the dual lock re-closable fasteners on the panel and the spar box together to attach the panel.

Figure 25-10.6: Crew Carpet

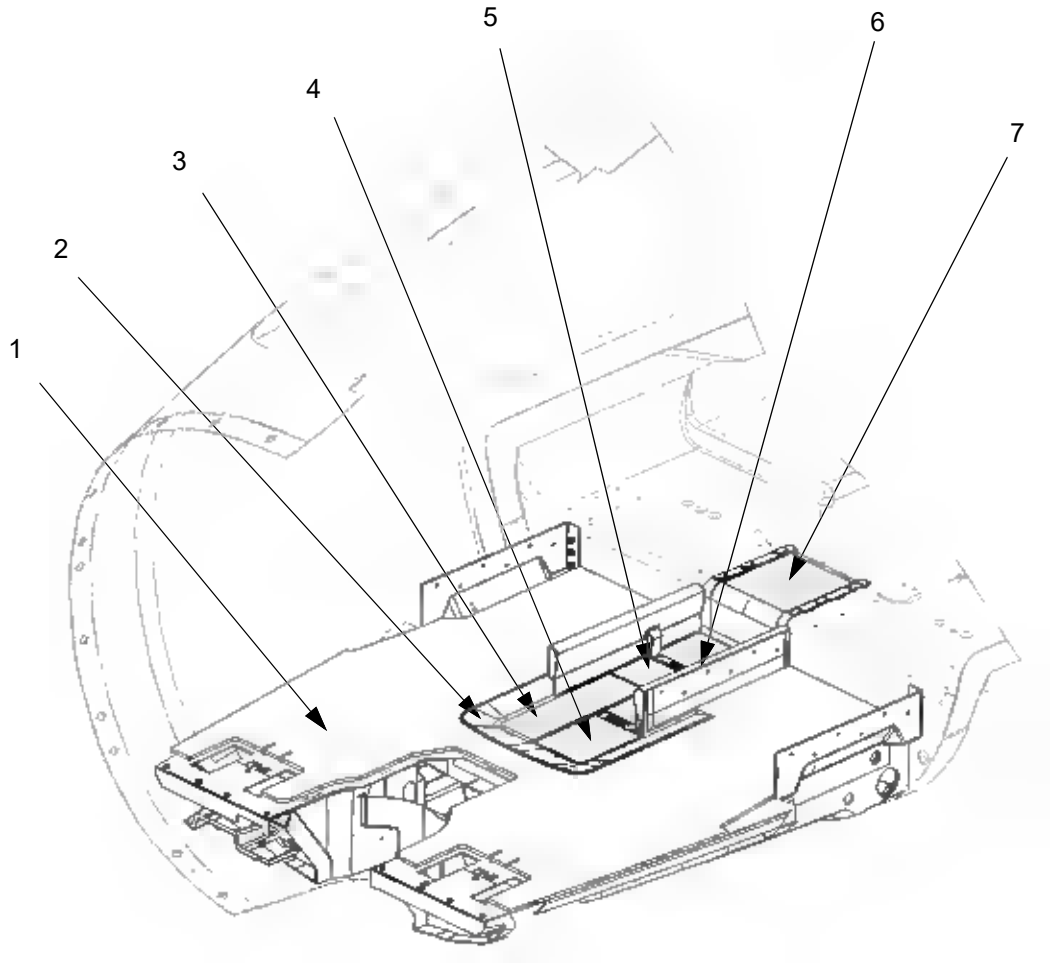

LEGEND

1. Crew Carpet
2. Panel Trim
3. Fire Extinguisher Compartment Cover, RH
4. Fire Extinguisher Compartment Cover, LH
5. Emergency Gear Down Compartment Cover, RH
6. Emergency Gear Down Compartment Cover, LH
7. Spar Box Panel

G. Crew Lower Finish Panels

Removal and installation procedures for crew lower finish panels are similar for the left and right sides of the fuselage.

(1) Removal

(a) Remove the seat adjacent to the panel(s) to be removed.

(b) Remove the pad of the armrest to access the four socket head screws and washers attaching the armrest assembly to the support underneath then remove the screws.

(c) Remove the two screws and washers attaching the armrest assembly to the two upper isolator brackets.

(d) Support the armrest assembly while disconnecting the lights wiring connection.

(e) Remove the armrest assembly.

(f) Remove the four screws and washers attaching the lower kick panel to the fuselage.

(g) Disconnect the hot air hose from the vent then remove the kick panel.

(h) Remove the two screws and washers attaching the oxygen outlet/mic jack surround then remove the surround.

(i) Remove the ten screws and washers attaching the upper panel to the fuselage then carefully pull the panel away from the fuselage.

(j) Disconnect the USB wiring connection.

(k) Remove the upper panel.

(2) Installation

(a) Connect the USB wiring to the USB port in the upper panel.

(b) Attach the upper panel to the fuselage using ten screws and washers.

(c) Install the oxygen outlet/mic jack surround using two screws and washers.

(d) Install the lower kick panel using four screws and washers.

(e) Connect the electrical harness to the armrest lights.

(f) Install the armrest assembly using four socket head screws and washers.

(g) Install the armrest pad to the armrest assembly.

Figure 25-10.7: Crew Finish Panels

LEGEND

1. Armrest
2. Kick Panel
3. Kick Panel Cover
4. Oxygen Outlet/Mic Jack Surround
5. Isolation Bracket
6. Cover Plate
7. Screw
8. Socket Head Screw
9. Washer Head Screw
10. Washer
11. Lock Washer
12. Dimpled Washer
13. Spacer

The right side panels are shown.
The left side panels are similar.

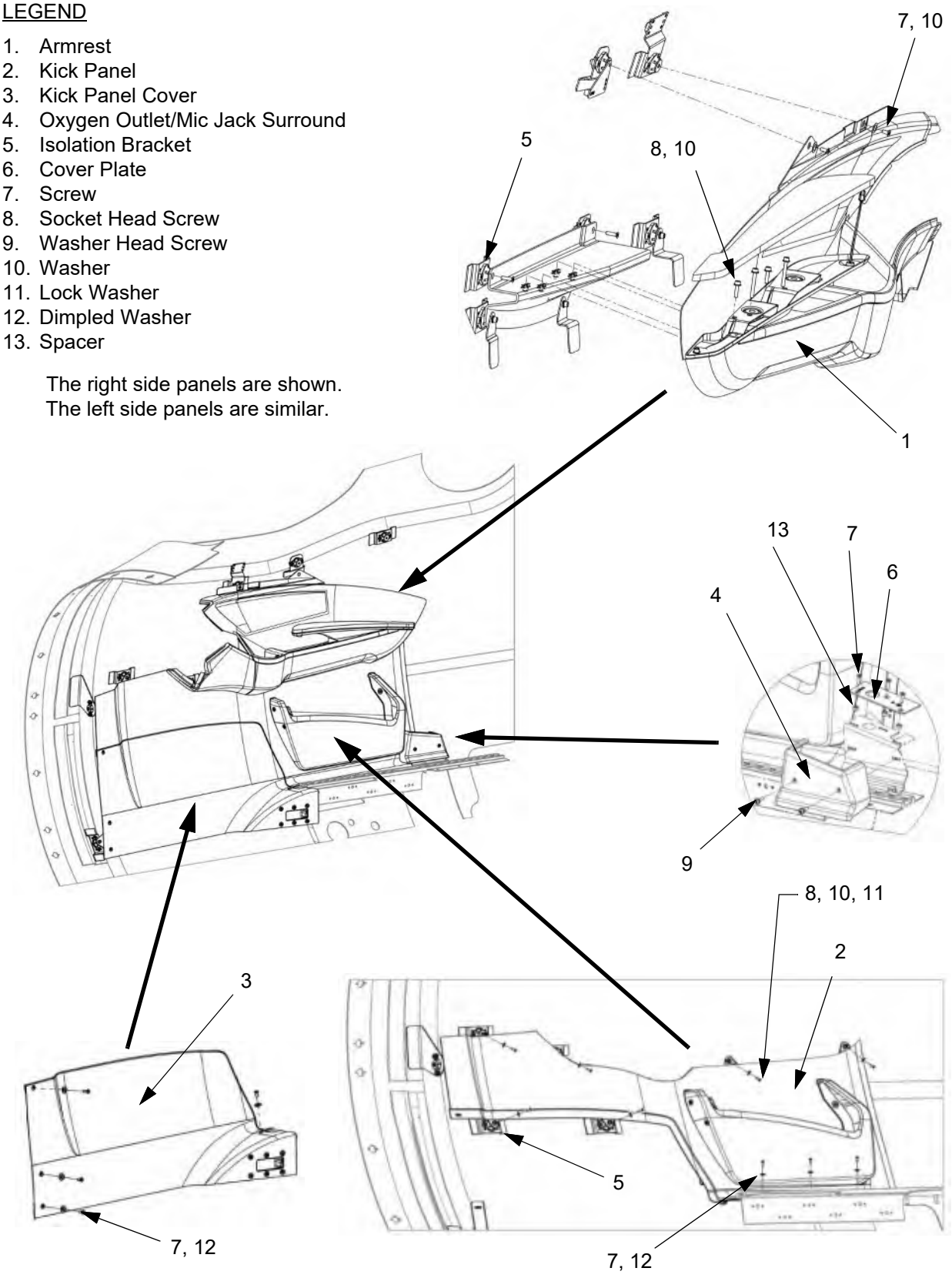

H. Crew Upper Finish Panels

Refer to Chapter 25-20.

I. Glare Shield

(1) Removal

(a) Remove the aft bulkhead finish panel (refer to Chapter 25-50).

(b) Remove all overhead finish panels (refer to Chapter 25-20).

(c) Gently lift the aft edge of the left corner vent panel then pull it aft and out.

(d) Gently lift the aft edge of the right corner vent panel then pull it aft and out.

Note: The vent panels are attached with dual-lock fastener.

(e) Remove the screw attaching the fastener cover to the glare shield slider then remove the cover.

(f) Remove the (4) screws and lock washers attaching the slider to the glare shield then remove the slider.

(g) Remove the (2) screws attaching the center of the glare shield to the instrument panel.

(h) Remove the (4) socket head screws and washers attaching the left and right sides of the glare shield to the isolator.

(i) Pull the glare shield aft approximately three inches to access the lighting connector then disconnect the electrical connector and defog plenum hose.

(j) Remove the glare shield.

(2) Installation

(a) Installation is the reverse of removal.

Figure 25-10.8: Glare Shield (Sheet 1 of 5)

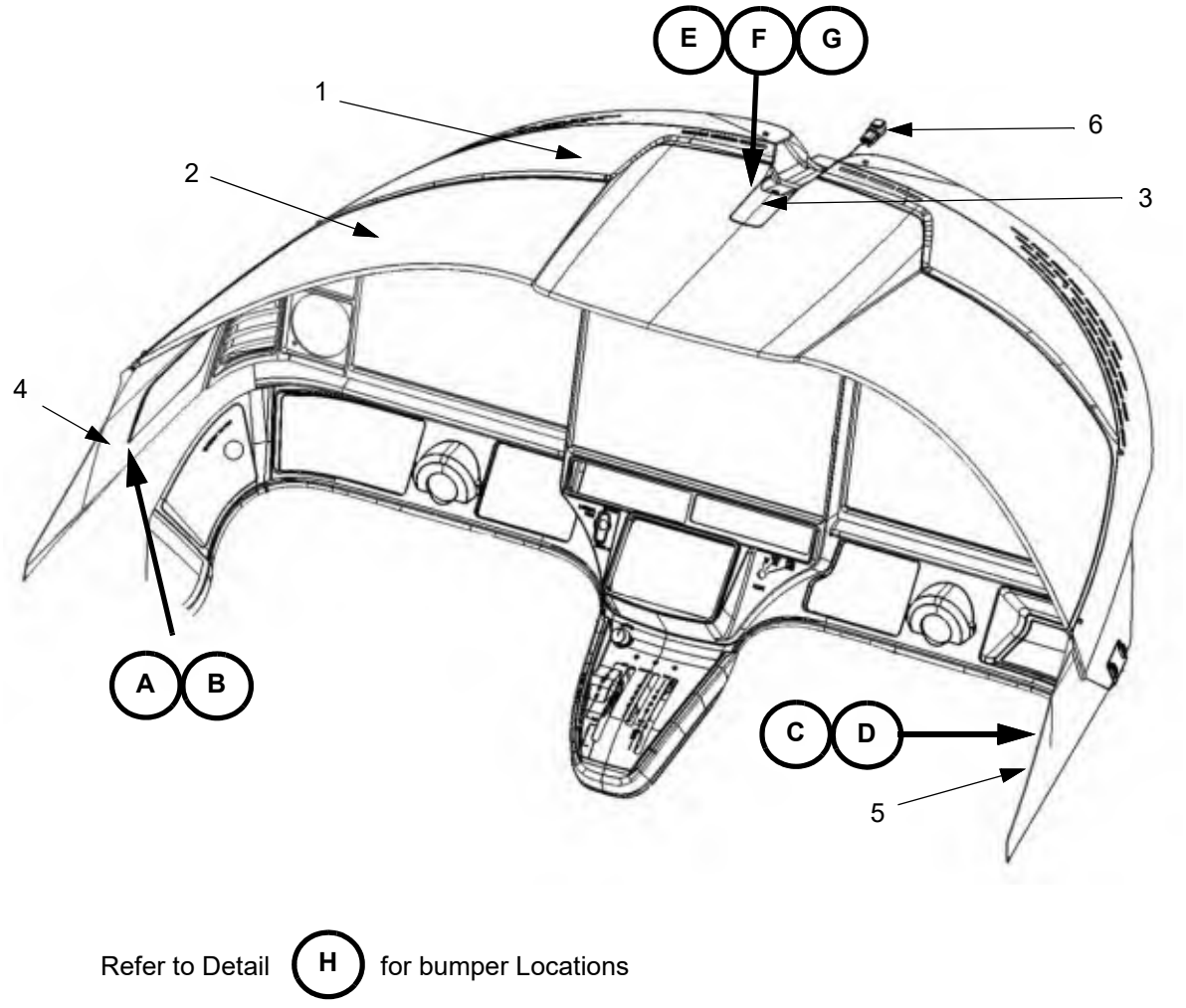

LEGEND

1. Glare Shield
2. Slider
3. Fastener Cover
4. Corner Vent Panel, LH
5. Corner Vent Panel, RH
6. Lighting Connector

Figure 25-10.7: Glare Shield (Sheet 2 of 5)

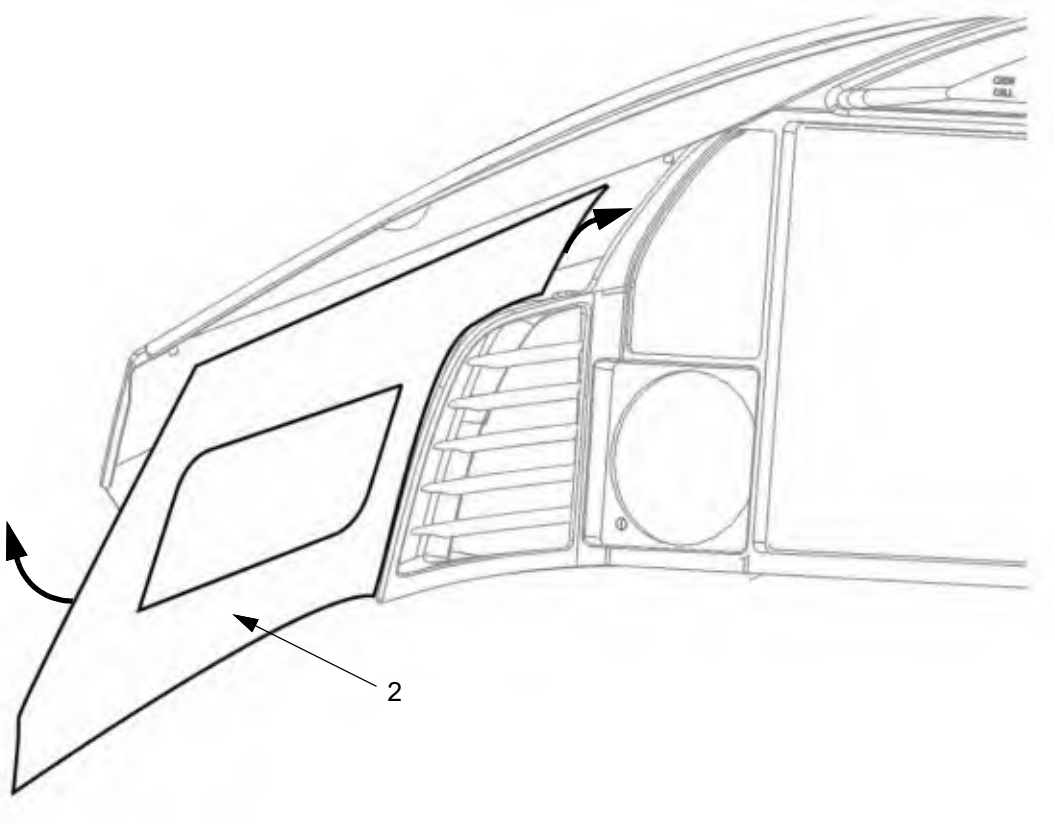

Detail A

LEGEND

1. Glare Shield
2. Corner Vent Panel, LH
3. Socket Head Screw
4. Washer

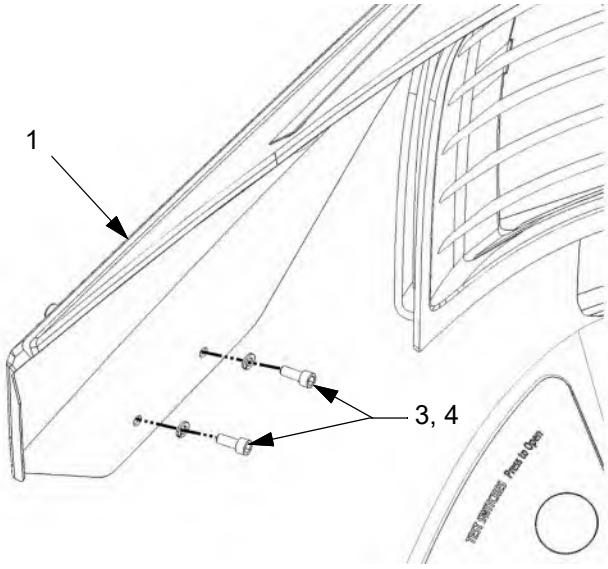

Detail B

Figure 25-10.7: Glare Shield (Sheet 3 of 5)

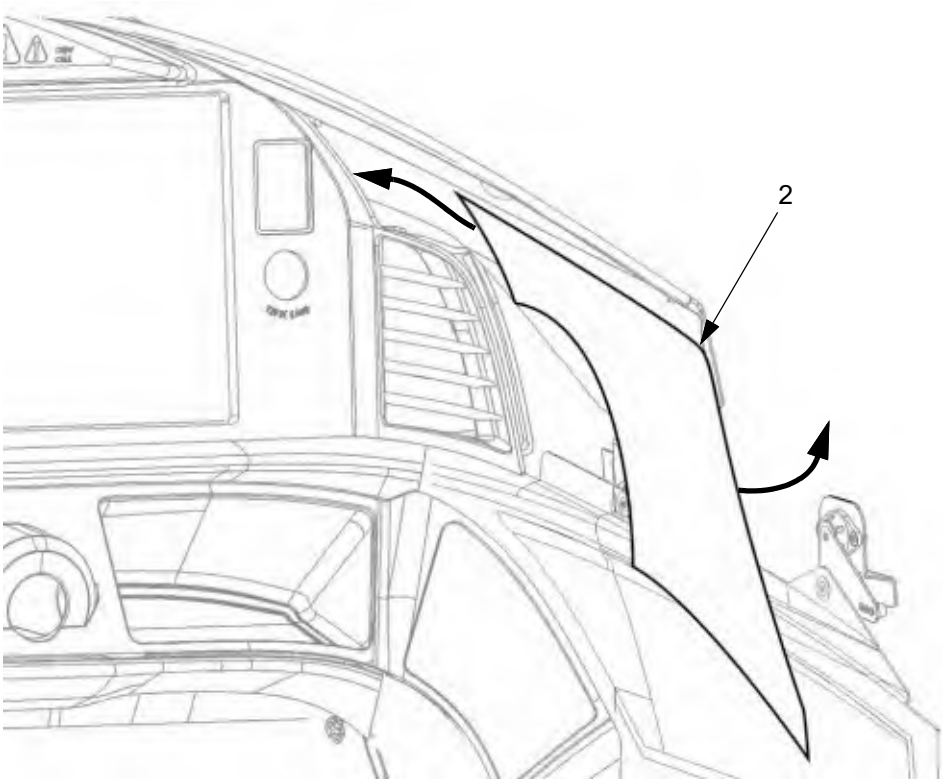

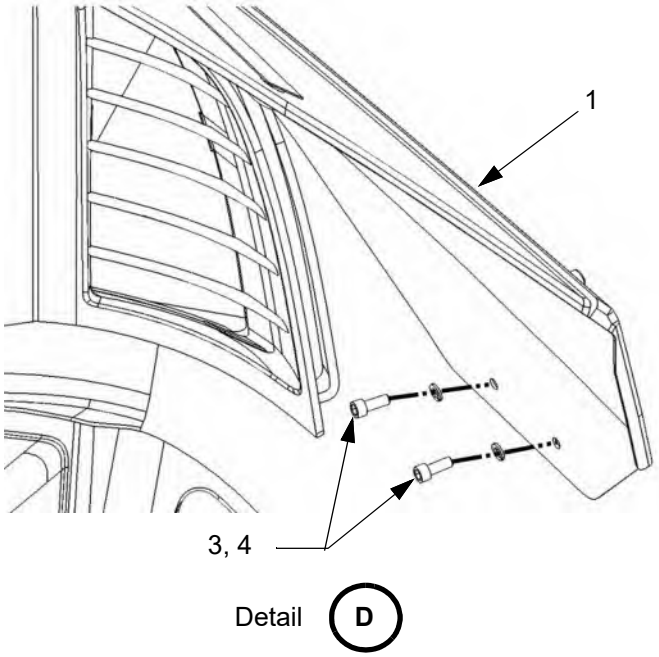

LEGEND

1. Glare Shield
2. Corner Vent Panel, RH
3. Socket Head Screw
4. Washer

Figure 25-10.7: Glare Shield (Sheet 4 of 5)

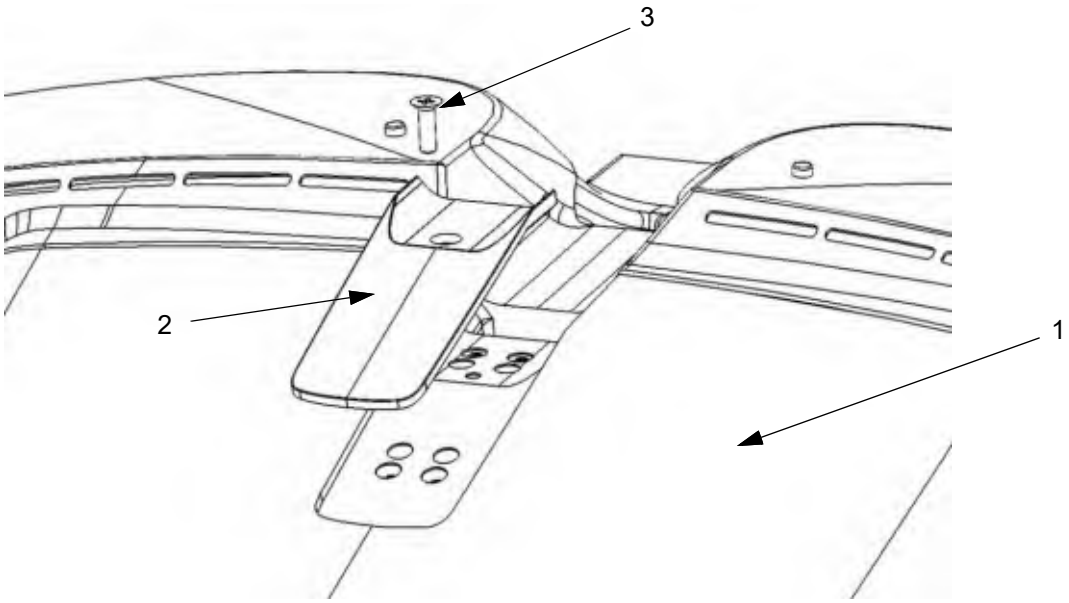

Detail E

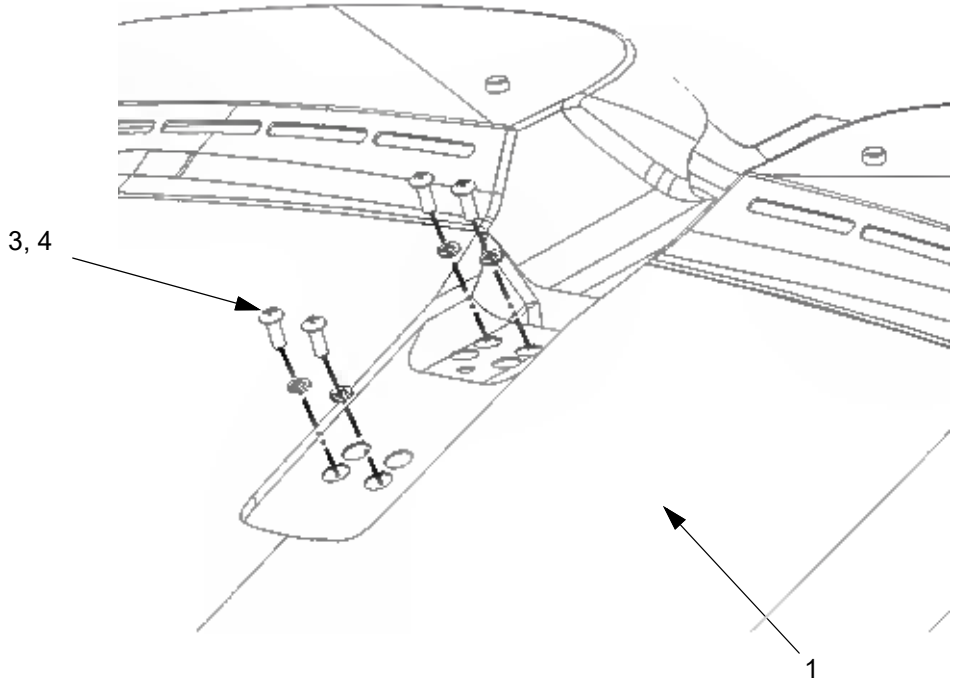

Detail F

LEGEND

1. Slider
2. Fastener Cover
3. Screw
4. Washer

Figure 25-10.7: Glare Shield (Sheet 5 of 5)

LEGEND

1. Glare Shield
2. Screw
3. Bumper

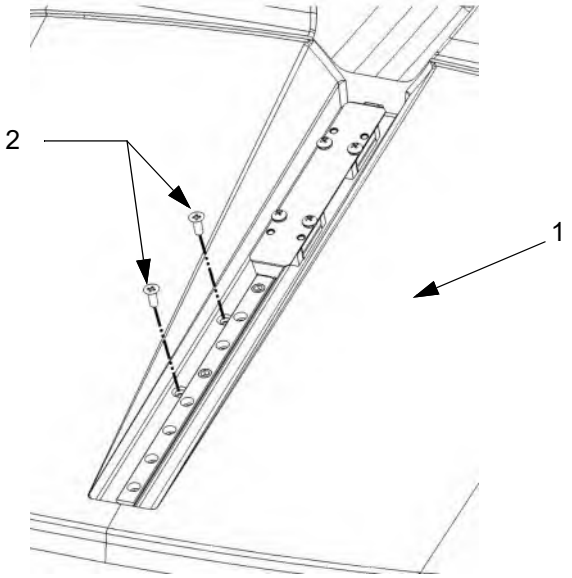

Detail G

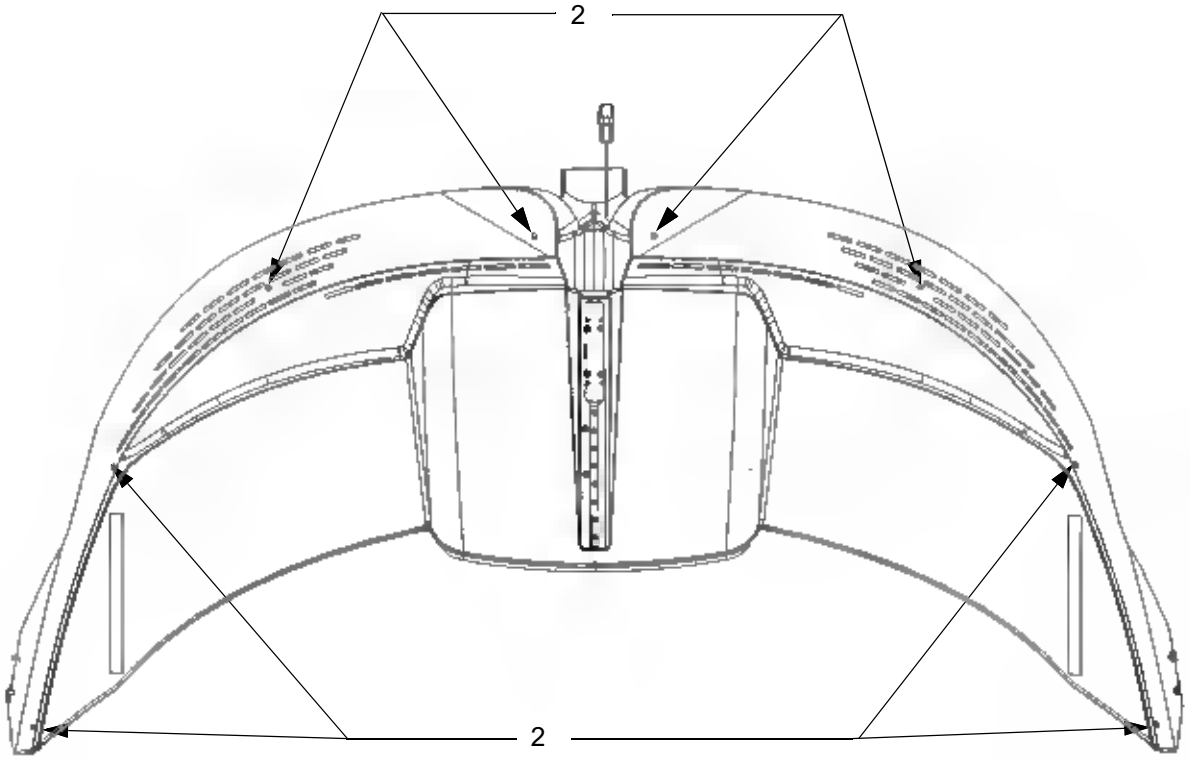

Detail H

J. Sun Visors

Note: Left side shown, right side is opposite.

(1) Removal

(a) Remove the screw that attaches the sun visor to the post.

(b) Remove the sun visor.

(c) Remove the upper finish panel (refer to chapter 25-20.H).

Note: The sun visor bucket is attached to the finish panel with dual-lock.

(d) Remove the sun visor bucket.

(e) Remove the screws that attach the post to the structure.

(f) Remove the post.

(2) Installation

(a) Put the post in position and install the screws that attach the post to the structure.

(b) Install the sun visor bucket and upper finish panel (refer to chapter 25-20.H).

(c) Put the sun visor in position.

(d) Install the screw that attaches the sun visor to the post.

Figure 25-10.9: Sun Visor

LEGEND

1. Sun Visor
2. Post
3. Screw

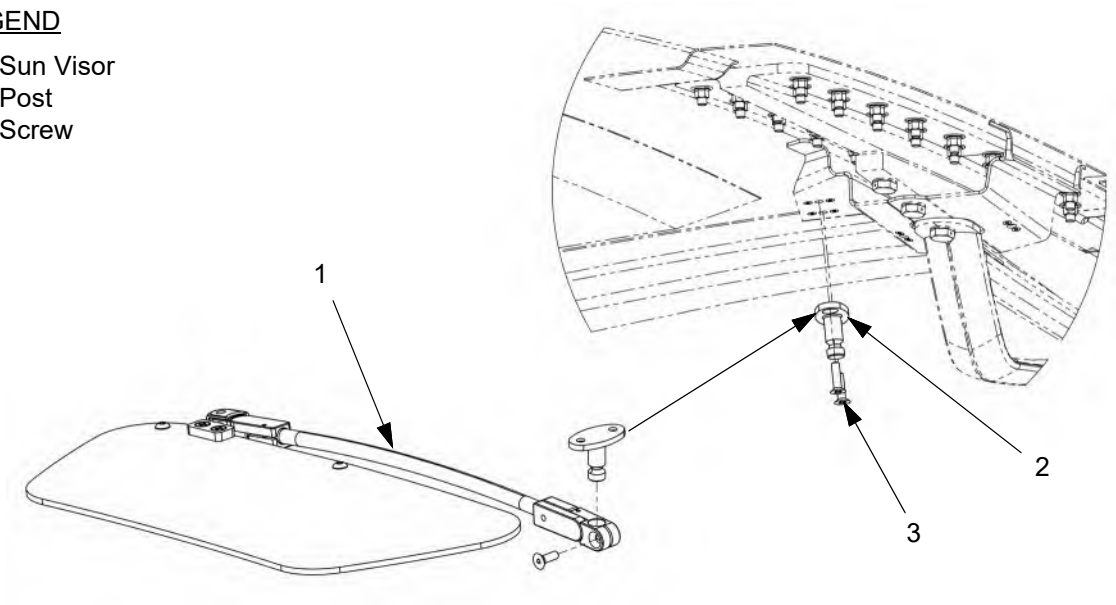

Pilot's side shown, co-pilot's side opposite.
(Shown with finish panels removed.)

This Page Intentionally Left Blank

PASSENGER COMPARTMENT

1. Description

The mid and aft row passenger seats have vertically adjustable headrests, retractable armrests, and reclining backrests. The backrest can be tilted forward to assist with loading baggage. The seat harnesses provide three point restraint with an inertial reel integral to the seat. The right aft seat and left mid seat interchangeable and the right aft seat and left mid seat interchangeable due to the position of the armrests.

2. Maintenance Practices

A. Passenger Seats

(1) Removal

(a) Make sure the seat is in the full-upright position, with the armrest and headrest stowed.

(b) Disengage each of the (4) locking pins as follows:

(i) One cable at a time, using Millennium tool P/N 9000-2521276 on the outer swaged ball, pull the cable away from the seat base to disengage the locking pin from the seat rail.

(ii) Secure the inner swaged ball in the cable retaining slot to hold the locking pin in the retracted position.

(c) With all (4) locking pins retracted, slide the seat aft (aft seats), or forward (mid-row seats) in the rails to align the cleats with the cut outs in the seat rails.

(d) Lift the seat up and out of the seat rails.

(e) Remove the seat from the airplane.

(2) Installation

Note: Make sure all (4) locking pins are retracted before beginning.

(a) Carefully set the seat in position on the seat rails.

(b) Align all (4) cleats with the cut outs in the seat rails.

Note: Rock the seat for and aft, and side-to-side gently if needed to help drop the cleats into the rails.

(c) Move the seat into its installed position.

(d) Engage each of the (4) locking pins as follows:

(e) One cable at a time, using Millennium tool P/N 9000-2521276 on the outer swaged ball, pull the cable away from the seat base to disengage the inner swaged ball from the retaining slot.

(i) Release the outer swaged ball to lower the locking pin into the seat rail.

(ii) Make sure the locking pins are fully deployed and the cleats are engaged in the seat rails by grasping the head rest and rocking the seat side-to-side, and forward and aft.

(3) Inspection

(a) Inspect the condition of the seat and security of the seat in the seat rails.

(b) Verify operation of the retractable armrest.

(c) Verify operation of the seat backrest adjustment in all positions.

(d) Verify operation of the headrests in all positions.

(e) Verify operation of the seat belt inertial reel.

(f) Inspect the seatbelt webbing for wear and damage and seatbelt installation hardware for condition and security.

B. Passenger Seat Rails

Refer to Chapter 53-40.

Figure 25-20.1: Passenger Seats (Sheet 1 of 2)

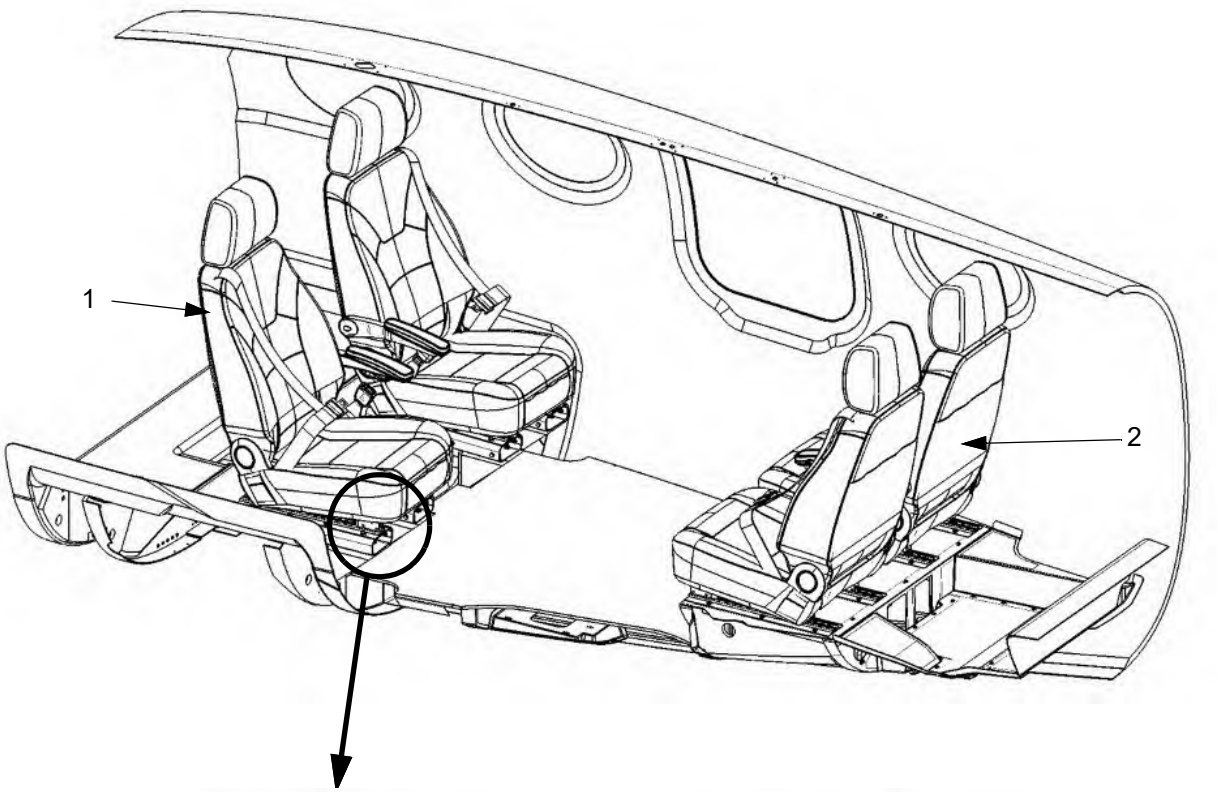

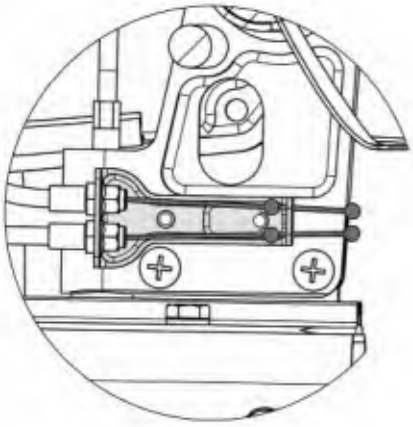

Cables shown with locking pins in deployed position.

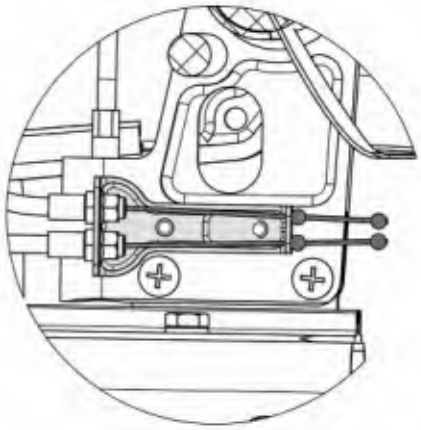

Cables shown with locking pins in retracted position.

LEGEND

1. Mid Row Passenger Seats
2. Aft Passenger Seats

Figure 25-20.1: Passenger Seats (Sheet 2 of 2)

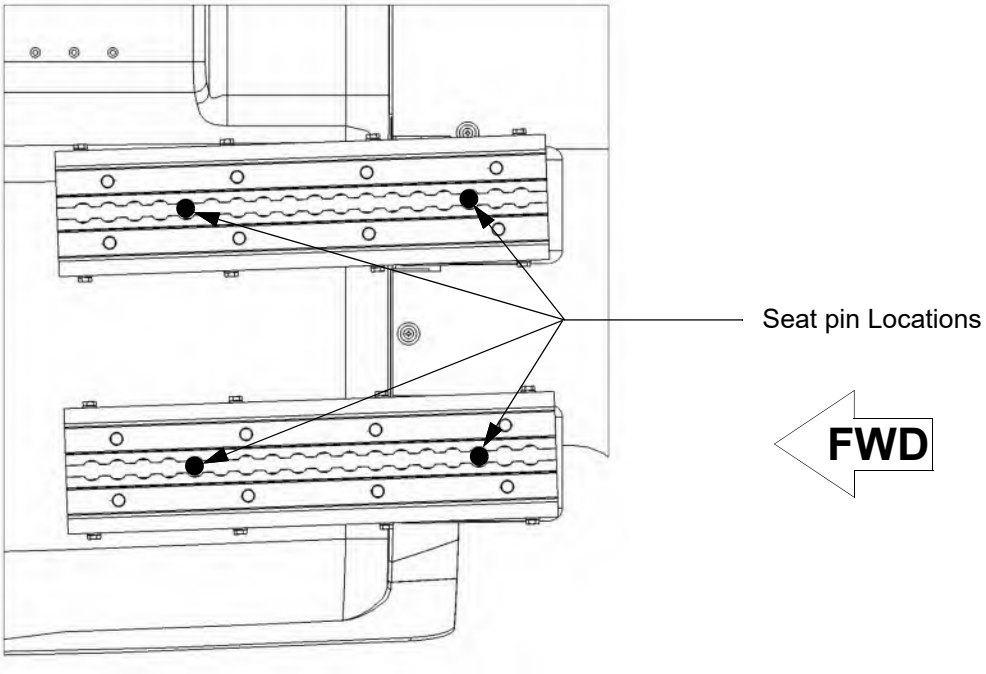

MIDDLE ROW SEAT PIN LOCATIONS
Left side shown, right side is mirror imaged.

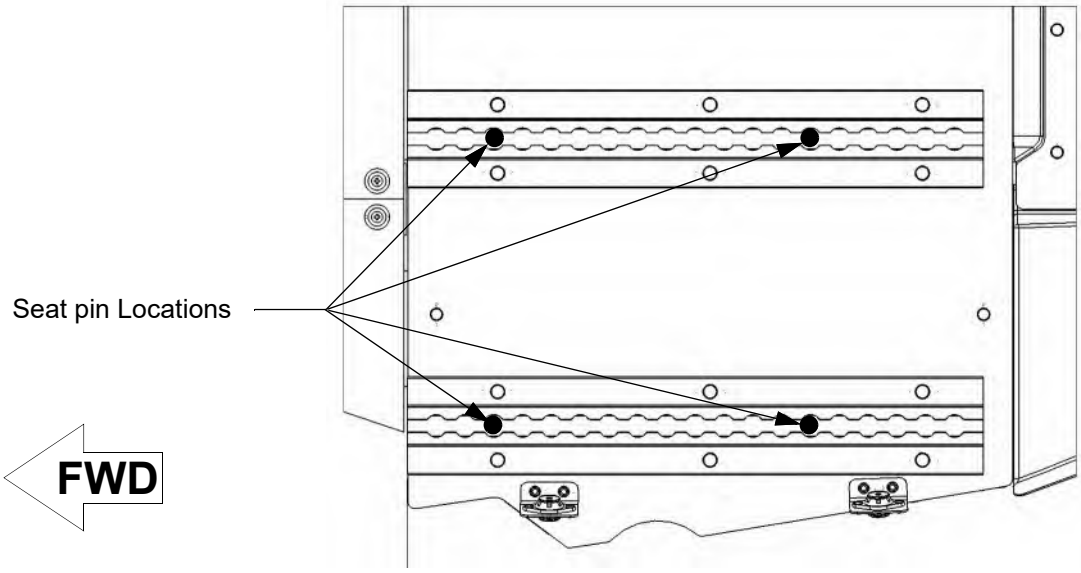

AFT ROW SEAT PIN LOCATIONS
Left side shown, right side is mirror imaged.

C. Carpet

The carpet pad has been bonded to the back of the carpet using adhesive. The carpet pad is attached to the sound damping material of the floor using flame retardant double coated cloth tape.

For installation of new carpet, the new carpet pad is installed first using flame retardant double coated cloth tape then the carpet is bonded to the pad using adhesive.

(1) Removal

(a) Hold the carpet and pad at a corner or an edge then pull it from the floor.

(2) Installation

(a) Move the carpet into position then press it into place. Apply flame retardant double coated cloth tape to the underside of the carpet pad as required.

D. Valences

(1) Removal

(a) Hold the valence at a corner or an edge then pull it away from the dual lock re-closable fasteners attaching it to the vertical surface of the spar box or the air conditioning evaporator enclosure.

(2) Installation

(a) Hold the valence in position against the vertical surface.

(b) Press the dual lock re-closable fasteners on the valence and the vertical surface together to attach the valence.

E. Seat Rail Covers

(1) Removal

(a) Remove the seats.

(b) Remove the valance from the vertical surface of the spar box or the air conditioning evaporator enclosure.

(c) Grasp the seat rail cover at a corner or an edge then pull it away from the dual lock re-closable fasteners attaching it to the horizontal surface of the spar box or the air conditioning evaporator enclosure.

(2) Installation

(a) Position the seat rail cover on the horizontal surface of the spar box or the air conditioning evaporator enclosure.

(b) Press the dual lock re-closable fasteners on the seat rail cover and the horizontal surface together to attach seat rail cover.

(c) Install the valence.

(d) Install the seats.

F. Threshold

(1) Removal

(a) Hold the threshold at a corner or an edge then pull it away from the dual lock re-closable fasteners attaching it to the floor and the door surround.

(b) Disconnect the wiring harness.

(2) Installation

(a) Hold the threshold in position.

(b) Press the dual lock re-closable fasteners on the threshold, the surround, and the floor together to attach the threshold.

(c) Connect the wiring harness.

Figure 25-20.2: Passenger Carpet, Valences, and Threshold (Sheet 1 of 3)

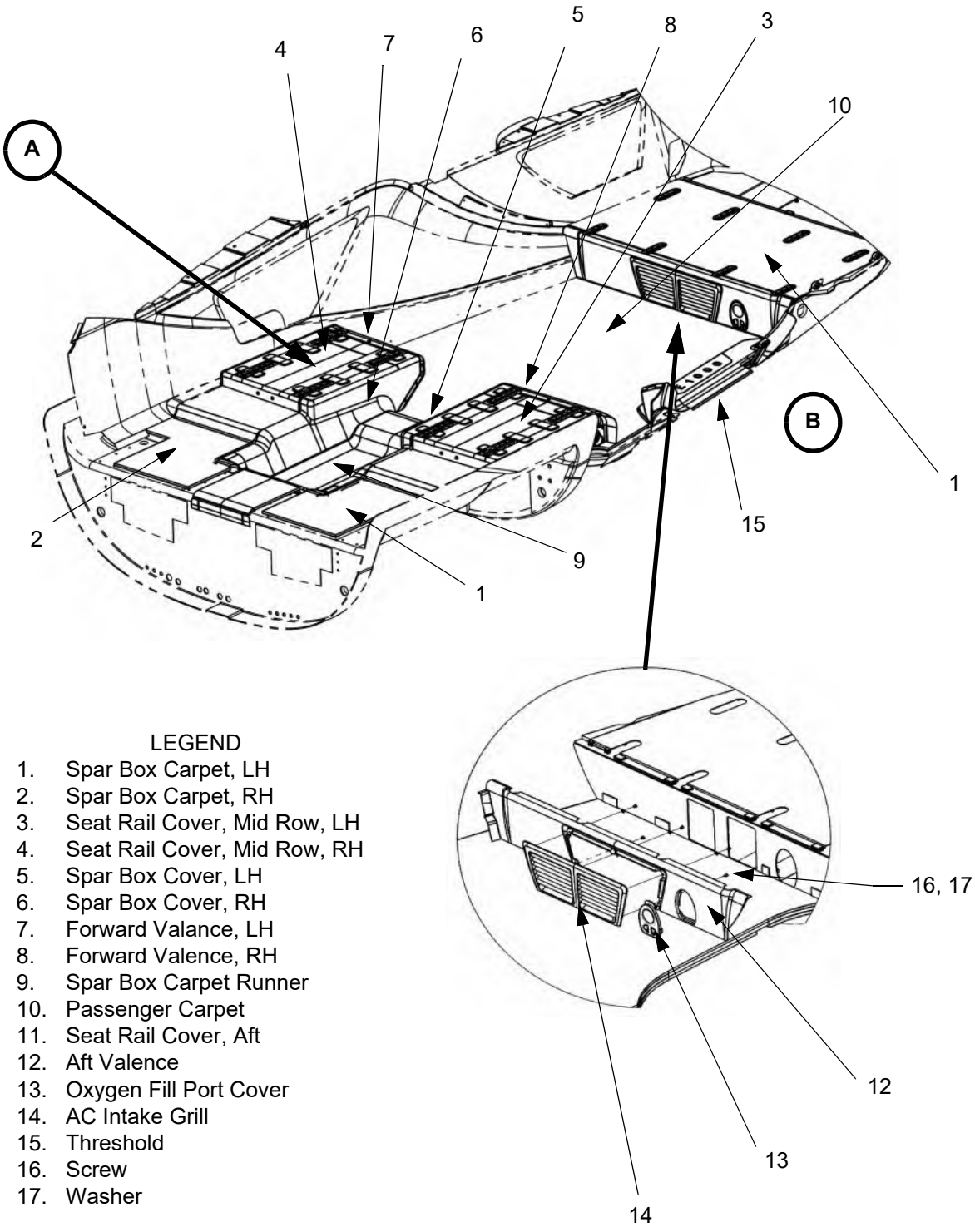

LEGEND

1. Spar Box Carpet, LH
2. Spar Box Carpet, RH
3. Seat Rail Cover, Mid Row, LH
4. Seat Rail Cover, Mid Row, RH
5. Spar Box Cover, LH
6. Spar Box Cover, RH
7. Forward Valance, LH
8. Forward Valence, RH
9. Spar Box Carpet Runner
10. Passenger Carpet
11. Seat Rail Cover, Aft
12. Aft Valence
13. Oxygen Fill Port Cover
14. AC Intake Grill
15. Threshold
16. Screw
17. Washer

Figure 25-20.2: Passenger Carpet, Valences, and Threshold (Sheet 2 of 3)

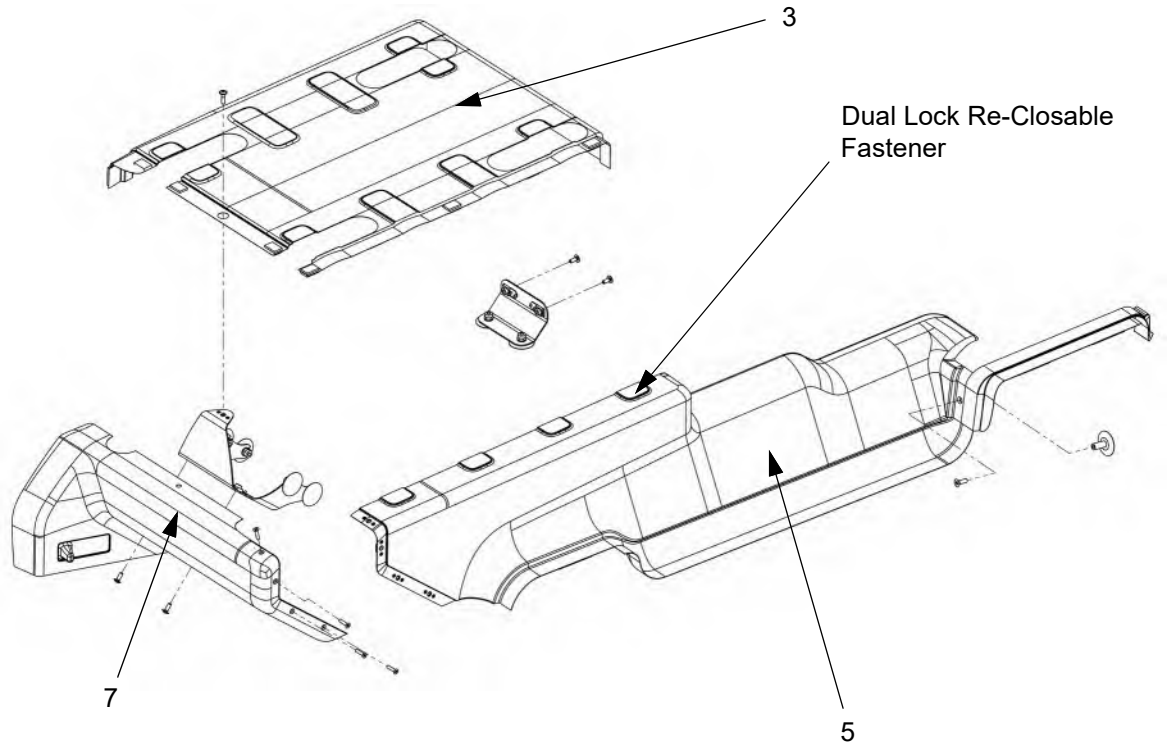

LEGEND

1. Spar Box Carpet, LH
2. Spar Box Carpet, RH
3. Seat Rail Cover, Mid Row, LH
4. Seat Rail Cover, Mid Row, RH
5. Spar Box Cover, LH
6. Spar Box Cover, RH
7. Forward Valance, LH
8. Forward Valence, RH
9. Spar Box Carpet Runner
10. Passenger Carpet
11. Seat Rail Cover, Aft
12. Aft Valence
13. Oxygen Fill Port Cover
14. AC Intake Grill
15. Threshold
16. Screw
17. Washer

LH shown.
RH is mirror image.

A

Figure 25-20.2: Passenger Carpet, Valences, and Threshold (Sheet 3 of 3)

LEGEND

1. Spar Box Carpet, LH
2. Spar Box Carpet, RH
3. Seat Rail Cover, Mid Row, LH
4. Seat Rail Cover, Mid Row, RH
5. Spar Box Cover, LH
6. Spar Box Cover, RH
7. Forward Valance, LH
8. Forward Valence, RH
9. Spar Box Carpet Runner
10. Passenger Carpet
11. Seat Rail Cover, Aft
12. Aft Valence
13. Oxygen Fill Port Cover
14. AC Intake Grill
15. Threshold
16. Screw
17. Washer

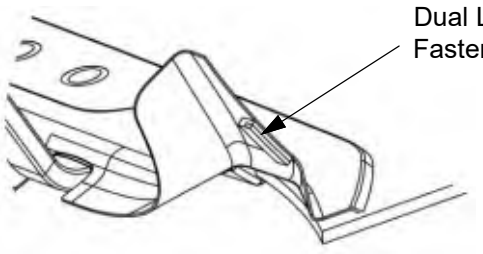

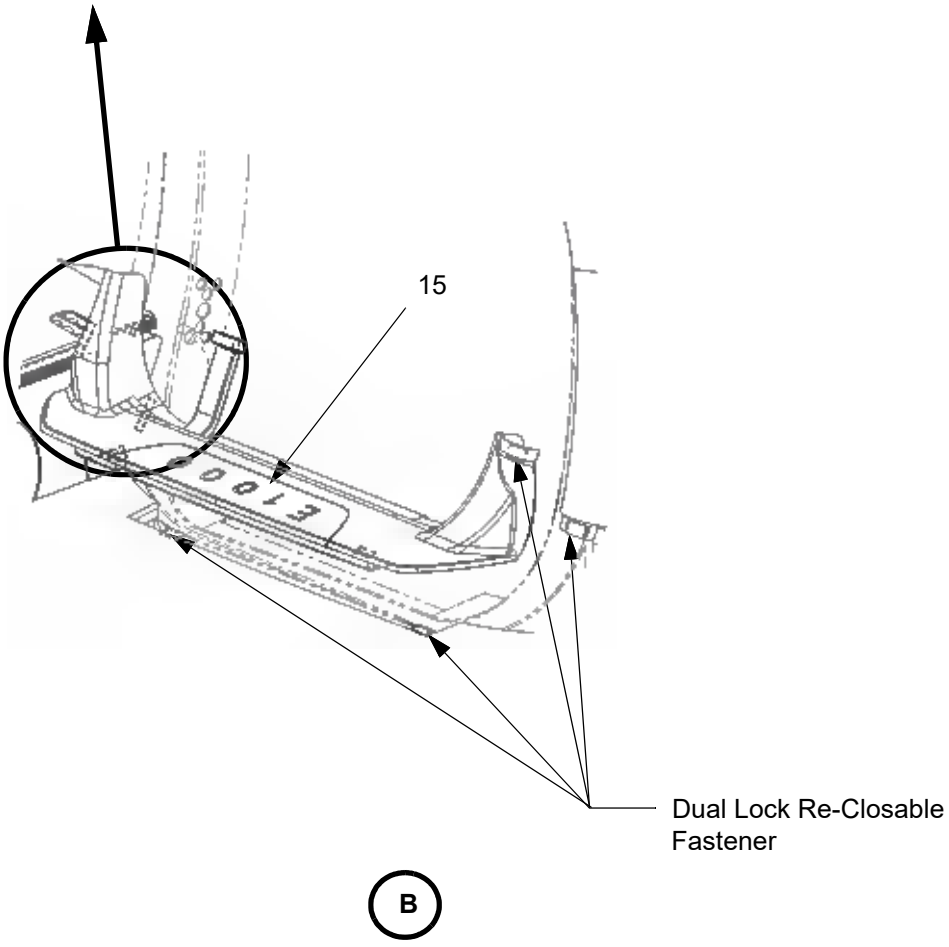

G. Overhead Finish Panels

The overhead finish panels support the passenger gasper valves, reading lights, cabin accent lighting, and the baggage compartment light.

(1) Removal

(a) Remove the screws that attach the aft grab handle to the pressure bulkhead and the fuselage then remove the handle.

(b) Remove the oxygen mask delivery system (MDS) covers.

Note: The covers are installed with dual lock fastener.

(c) Remove the screws and washers that attach the overhead finish panel to the supporting hat brackets.

(d) Slide the panel down and aft to disengage the aft overhead panel from the forward overhead panel.

(e) Disconnect the electrical connectors from the aft overhead finish panel.

(f) Remove the screws and washers that attach the forward overhead panel to the hat brackets on the fuselage then separate the panel from the dual lock fasteners at the front of the panel.

(g) Remove the forward overhead panel.

(h) Remove the two screws that attach the aft end of the center post finish panel to the hat brackets in the fuselage.

(i) Carefully lower the aft end of the panel then disconnect the electrical connector from the light housing.

(j) Remove the center post finish panel.

(2) Installation

(a) Installation is the reverse of removal.

H. AC Turn Duct Access Panel

(1) Removal

(a) Remove Overhead Finish Panels (refer to G. Overhead Finish Panels)

(b) Remove the (7) screws that attach the AC turn duct access panel to fuselage.

(c) Remove AC turn duct access panel.

(2) Installation

(a) Place AC turn duct access panel

(b) Install the (7) screws that attach the access panel to the fuselage.

(c) Install Overhead Finish Panels (refer to G. Overhead Finish Panels)

Figure 25-20.3: Overhead Finish Panels (Sheet 1 of 3)

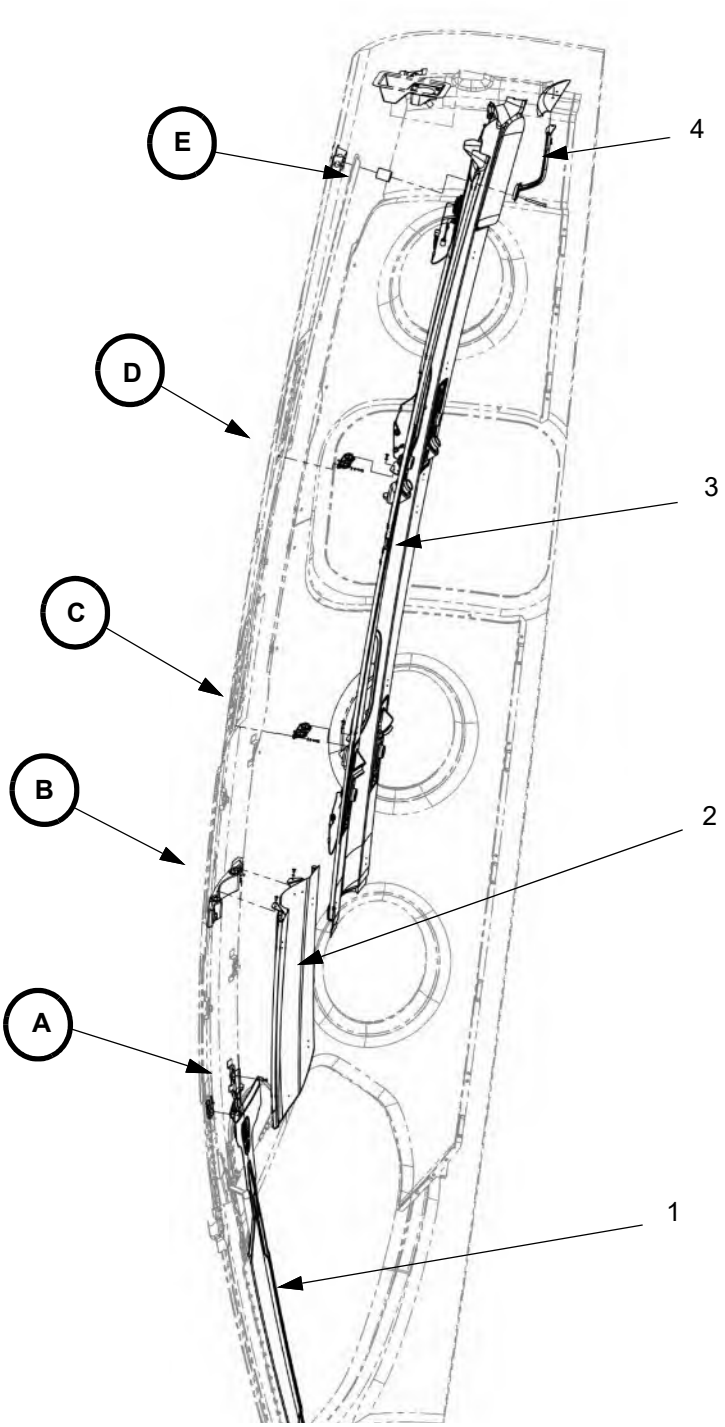

LEGEND

1. Center Post Finish Panel
2. Forward Overhead Panel
3. Aft Overhead Panel
4. Aft Grab Handle
5. Socket Head Screw
6. Washer Head Screw
7. Washer
8. Hat Bracket

Figure 25-20.3: Overhead Finish Panels (Sheet 2 of 3)

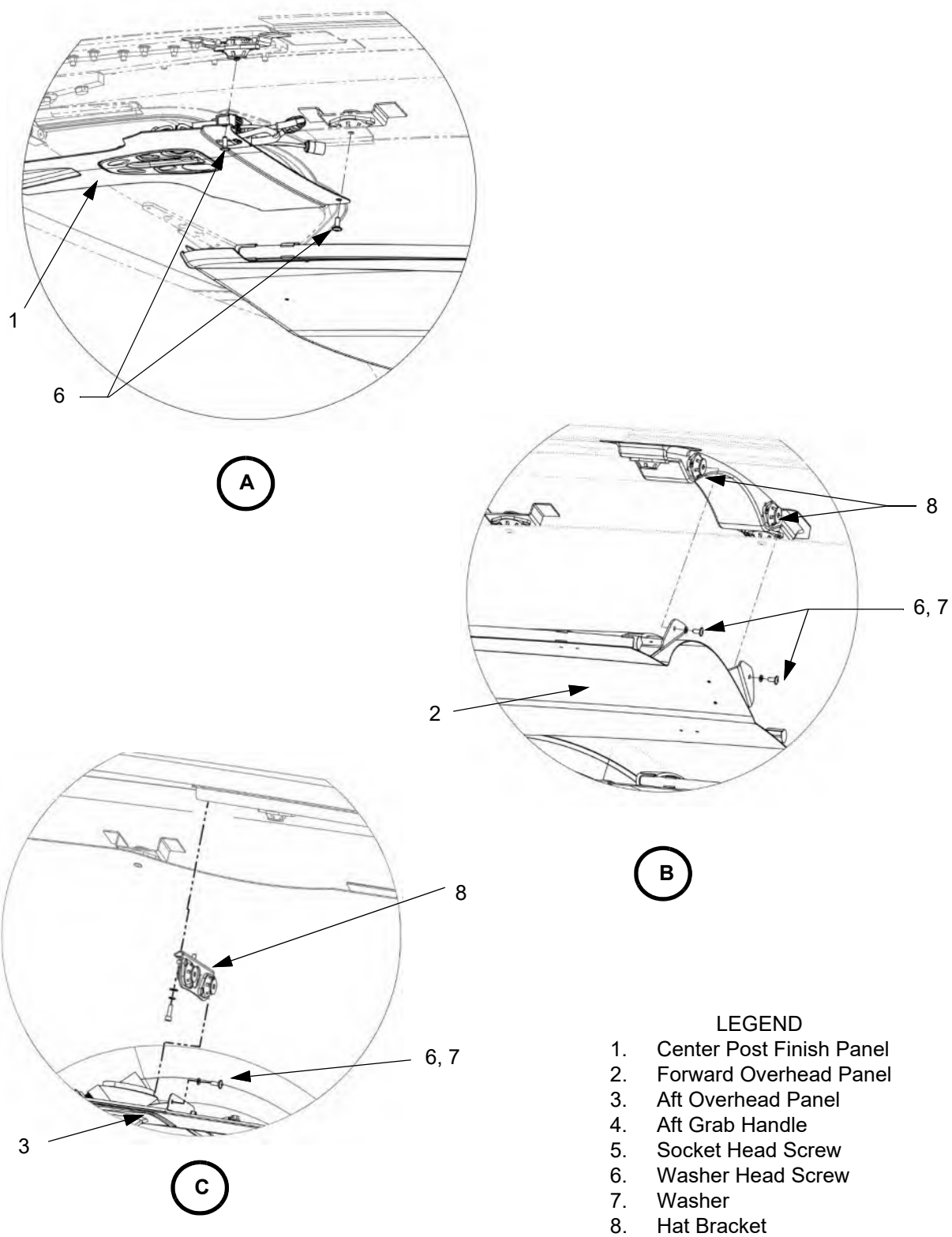

LEGEND

1. Center Post Finish Panel
2. Forward Overhead Panel
3. Aft Overhead Panel
4. Aft Grab Handle
5. Socket Head Screw
6. Washer Head Screw
7. Washer
8. Hat Bracket

Figure 25-20.3: Overhead Finish Panels (Sheet 3 of 3)

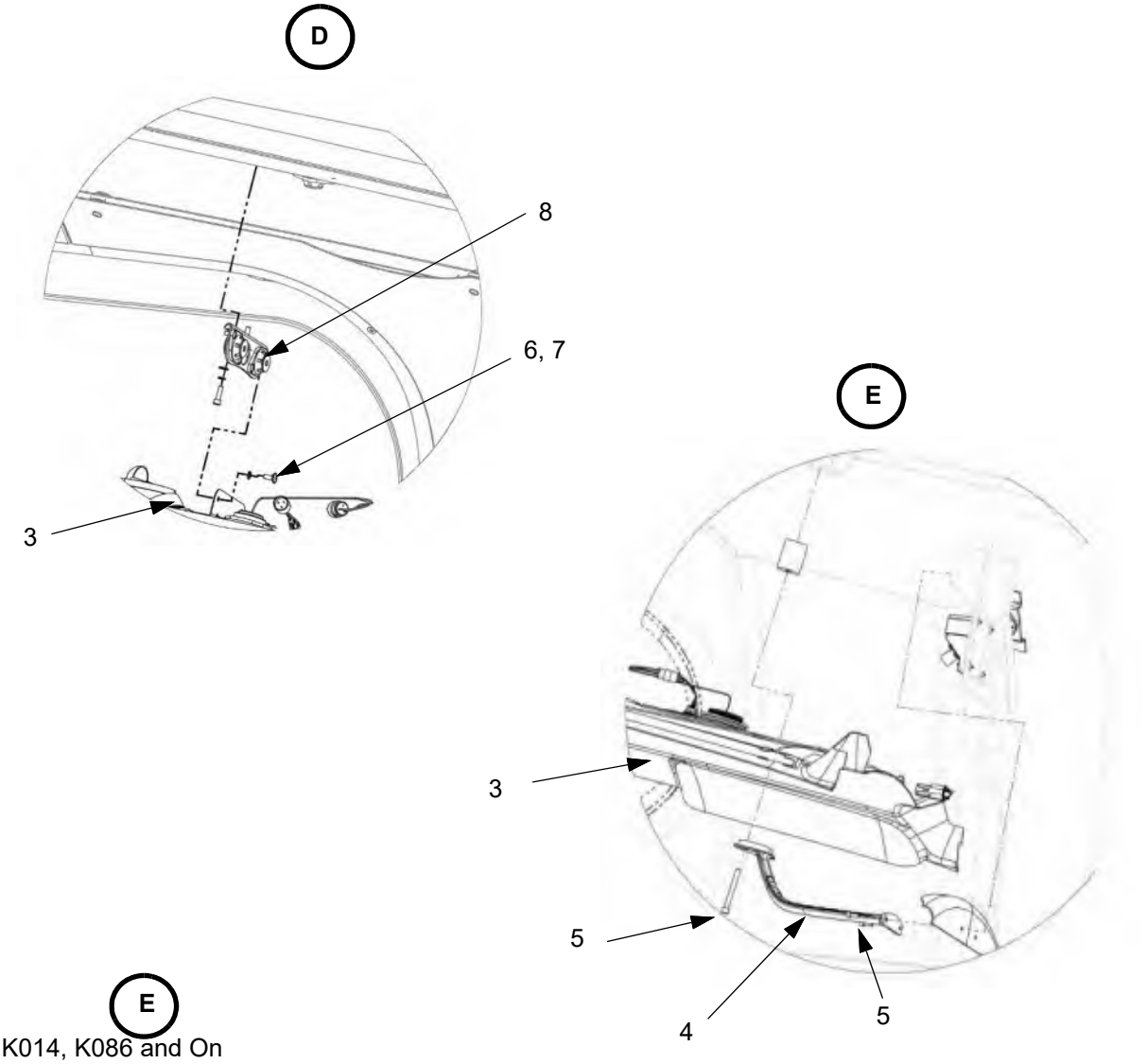

LEGEND

1. Center Post Finish Panel
2. Forward Overhead Panel
3. Aft Overhead Panel
4. Aft Grab Handle
5. Socket Head Screw
6. Washer Head Screw
7. Washer
8. Hat Bracket
9. AC turn duct access panel
10. Screws

I. Upper Finish Panels

The upper finish panels are an assembly of a fiberglass substrate overlain with sound damper material covered by upholstery.

Removal and installation procedures for the left and right sides of the fuselage are similar.

(1) Removal

(a) Remove the sunvisor, as applicable.

(b) Remove the overhead finish panels.

(c) Remove the screws and washers attaching the upper finish panel to the fuselage.

(d) Carefully pull on the edge of the panel to separate the dual lock re-closable fasteners attaching the panel to the fuselage.

(e) Remove the upper finish panel.

(2) Installation

(a) Position the panel aligning the screw holes in the panel with the isolation brackets on the fuselage.

(b) Install the screws and washers attaching the panel to the isolation brackets.

Note: Apply Loctite™ 242 to the threads of screws installed without a lock washer.

(c) Press on the edge of the panel to engage the dual lock re-closable fasteners on the panel and on the fuselage.

(d) Install the sunvisor, as applicable.

Figure 25-20.4: Upper Finish Panels Sheet (1 of 2)

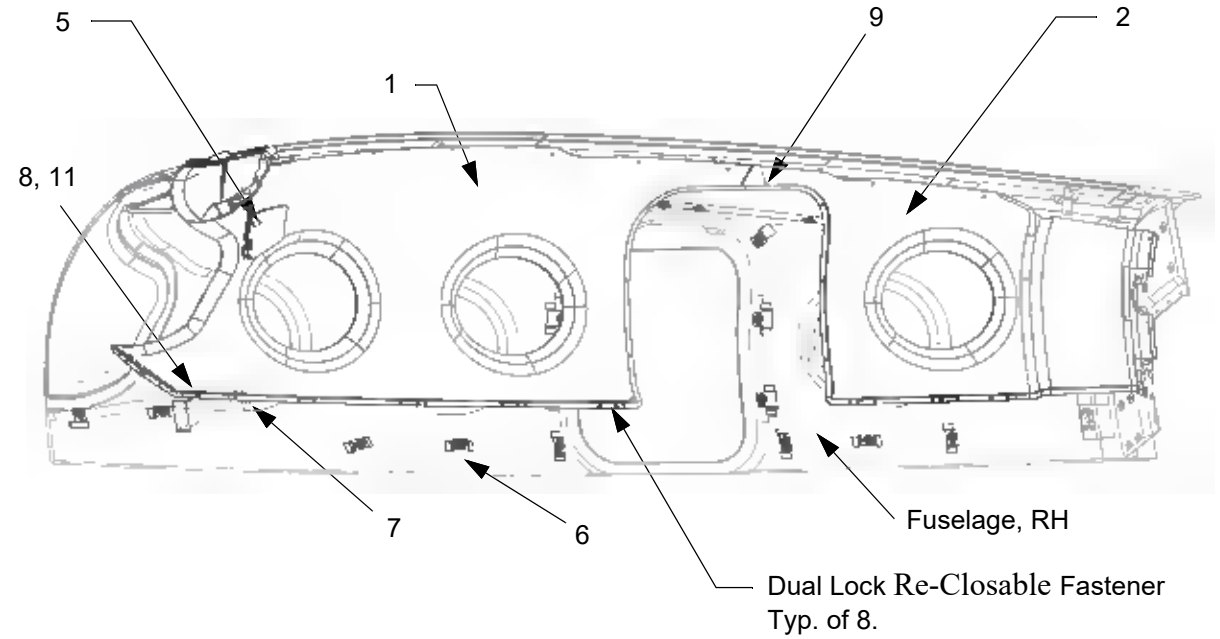

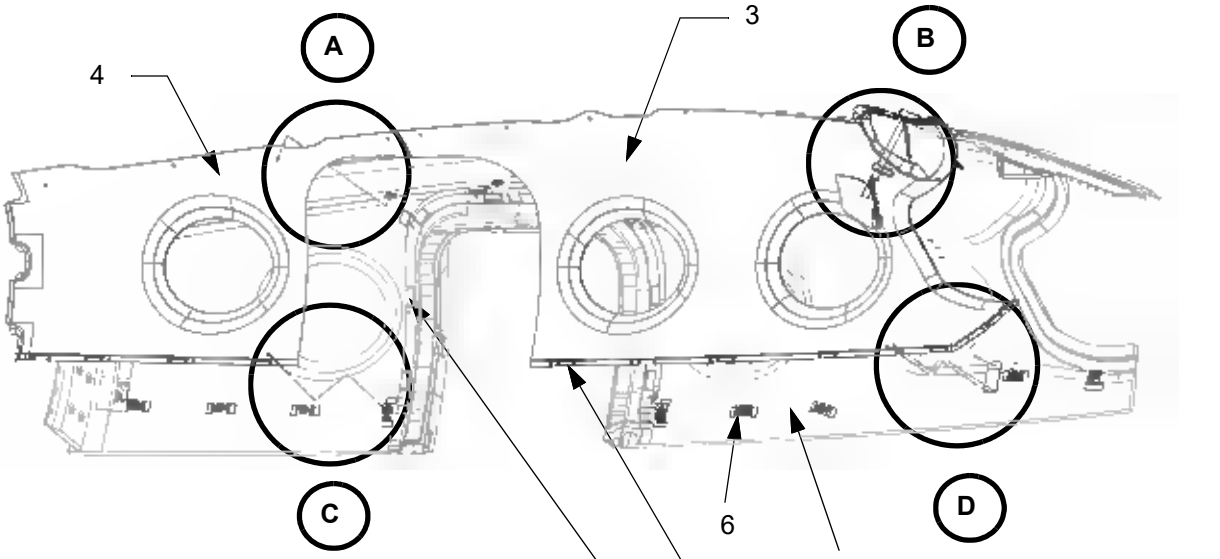

LEGEND

1. Forward Upper Panel, RH
2. Aft Upper Panel, RH
3. Forward Upper Panel, LH
4. Aft Upper Panel, LH
5. Sunvisor
6. Isolation Bracket
7. Screw
8. Socket Head Screw
9. Washer Head Screw
10. Washer
11. Lock Washer

Figure 25-20.3: Upper Finish Panels Sheet (2 of 2)

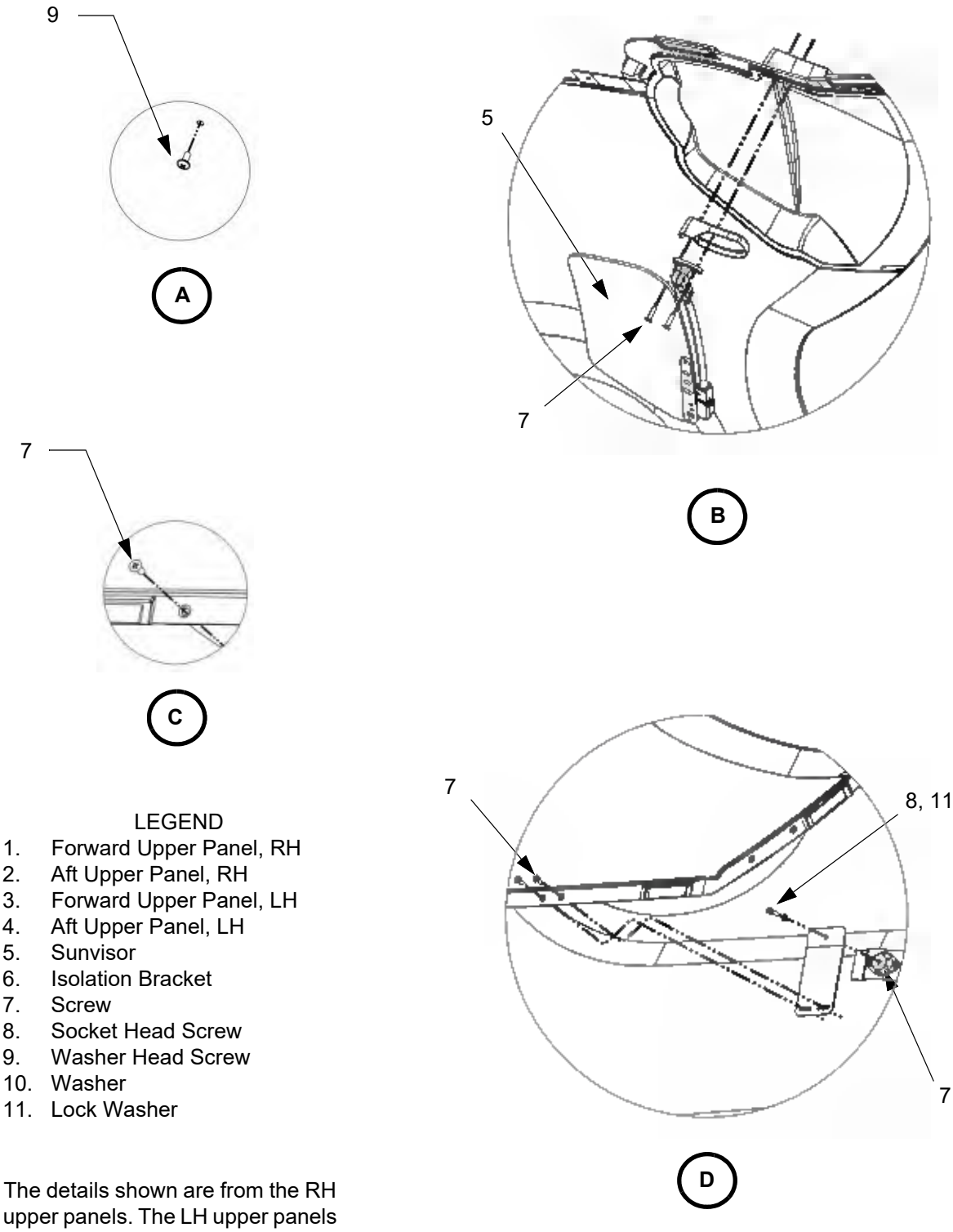

LEGEND

1. Forward Upper Panel, RH
2. Aft Upper Panel, RH
3. Forward Upper Panel, LH
4. Aft Upper Panel, LH
5. Sunvisor
6. Isolation Bracket
7. Screw
8. Socket Head Screw
9. Washer Head Screw
10. Washer
11. Lock Washer

The details shown are from the RH upper panels. The LH upper panels fasteners are similar.

J. Lower Finish Panels

The lower finish panels are an assembly of a fiberglass substrate overlain with sound damper material covered by upholstery.

(1) Removal

(a) Remove the mid and/or aft passenger seats, as necessary (refer to Chapter 25-10).

(b) Remove the screws and washers attaching the lower finish panel to the fuselage.

(c) Carefully pull on the edge of the panel to separate the dual lock re-closable fasteners attaching the panel to the fuselage, as necessary.

(d) Disconnect the wiring harness, as necessary.

(e) Remove the lower finish panel.

(2) Installation

(a) Connect the wiring harness, as necessary.

(b) Position the panel aligning the screw holes in the panel with the isolation brackets on the fuselage.

(c) Install the screws and washers attaching the panel to the isolation brackets.

(d) Press on the edge of the panel to engage the dual lock re-closable fasteners on the panel and on the fuselage, as necessary.

(e) Install the mid and/or aft passenger seats, as necessary (refer to Chapter 25-10).

Figure 25-20.5: Lower Finish Panels, Passenger Compartment (Sheet 1 of 7)

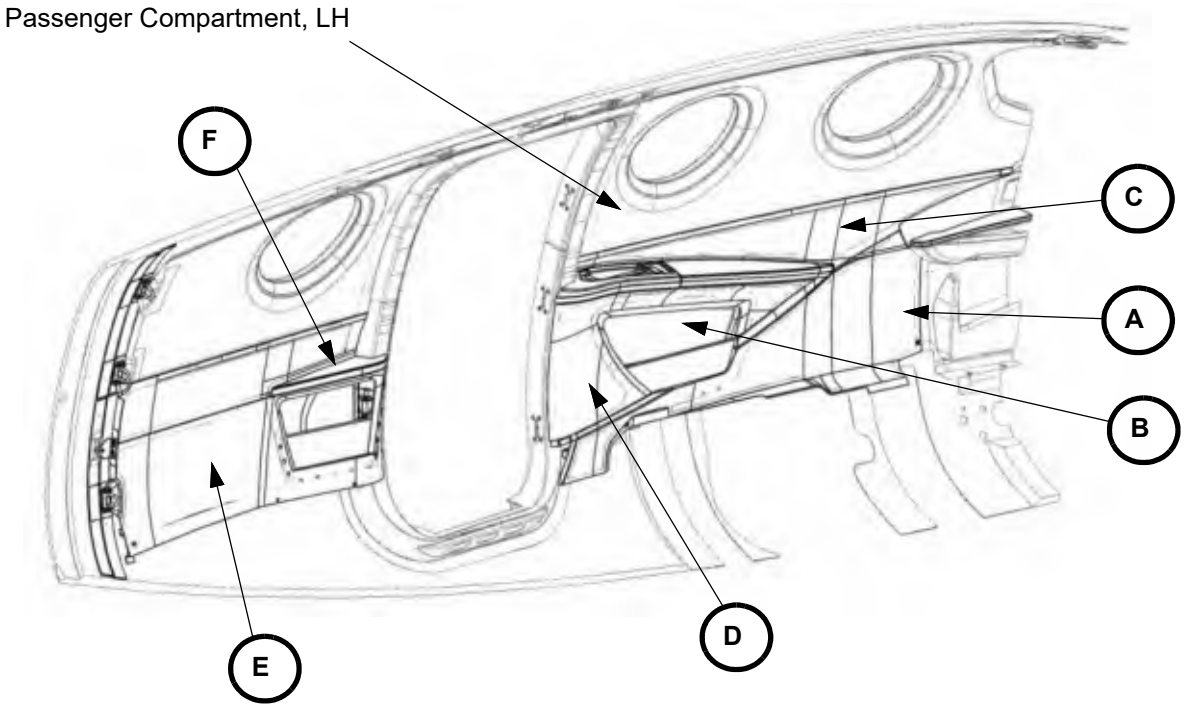

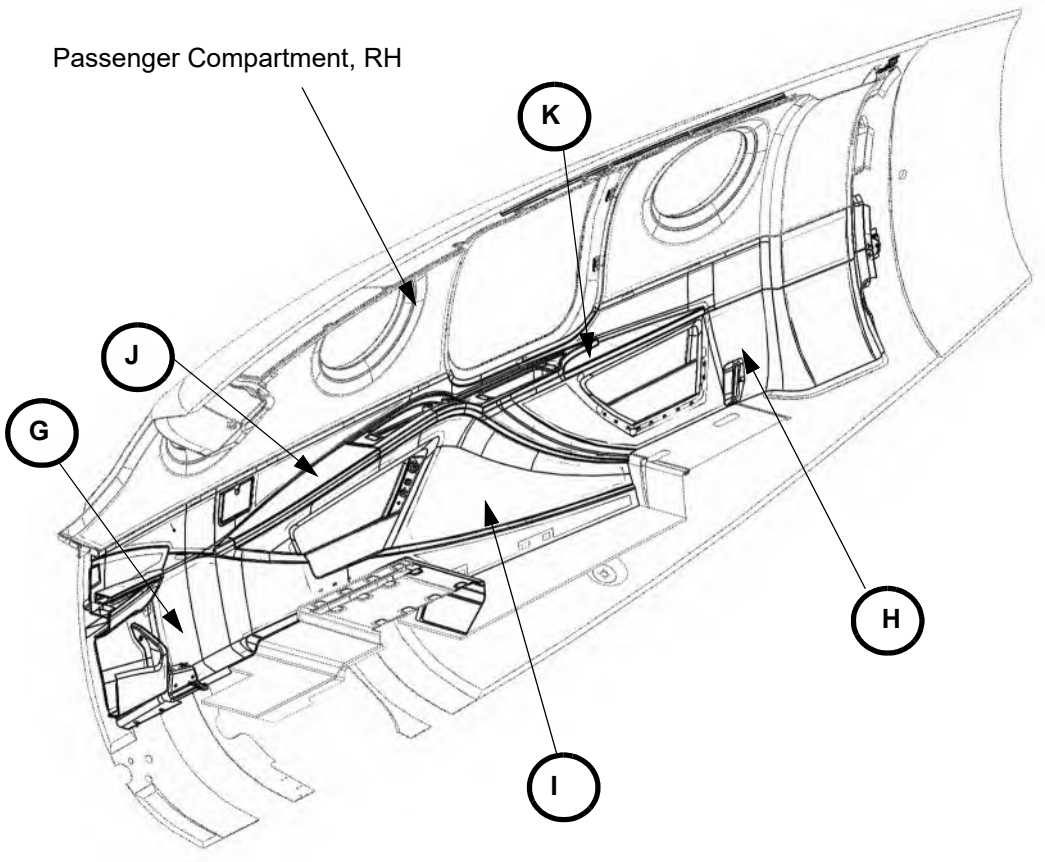

Figure 25-20.2: Lower Finish Panels, Passenger Compartment (Sheet 2 of 7)

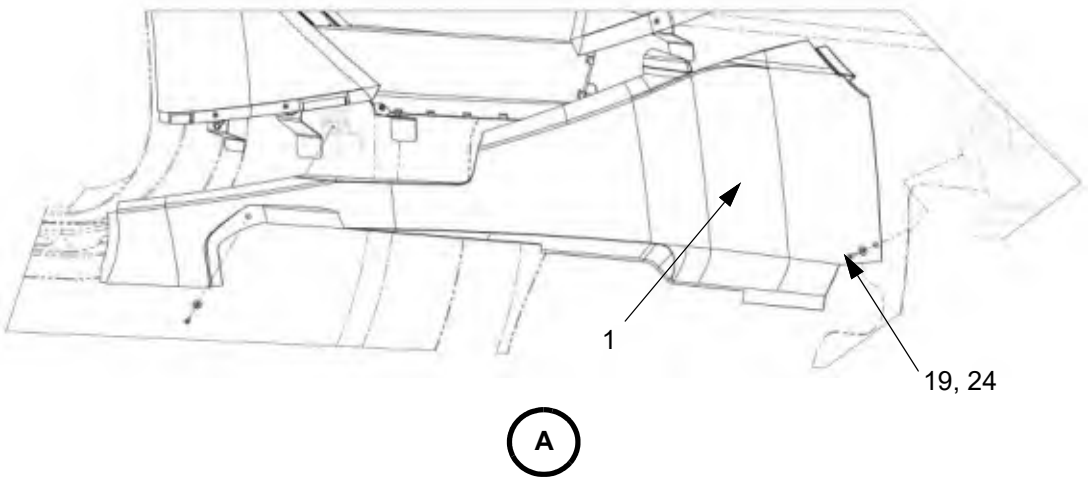

LEGEND

1. Mid Row Lower Panel, LH
2. Mid Row Closeout Panel, LH
3. Mid Row Accessory Closeout Panel, LH
4. Aft Row Lower Panel, LH
5. Aft Row Upper Panel, LH
6. Mid Row Armrest Mount, LH
7. Aft Row Armrest Mount, LH
8. Aft Row Armrest, LH
9. Mid Row Armrest, LH
10. Mid Row Armrest Mount, RH
11. Mid Row Closeout Panel, RH
12. Aft Row Closeout Panel, RH
13. Aft Row Armrest Mount, RH
14. Closeout Panel, RH
15. Aft Row Armrest Panel, RH
16. Mid Row Armrest Panel, RH
17. Mid Row Lower Panel, RH
18. Isolation Bracket
19. Screw
20. Socket Head Screw
21. Washer Head Screw
22. Washer
23. Lock Washer
24. Dimpled Washer

Figure 25-20.2: Lower Finish Panels, Passenger Compartment (Sheet 3 of 7)

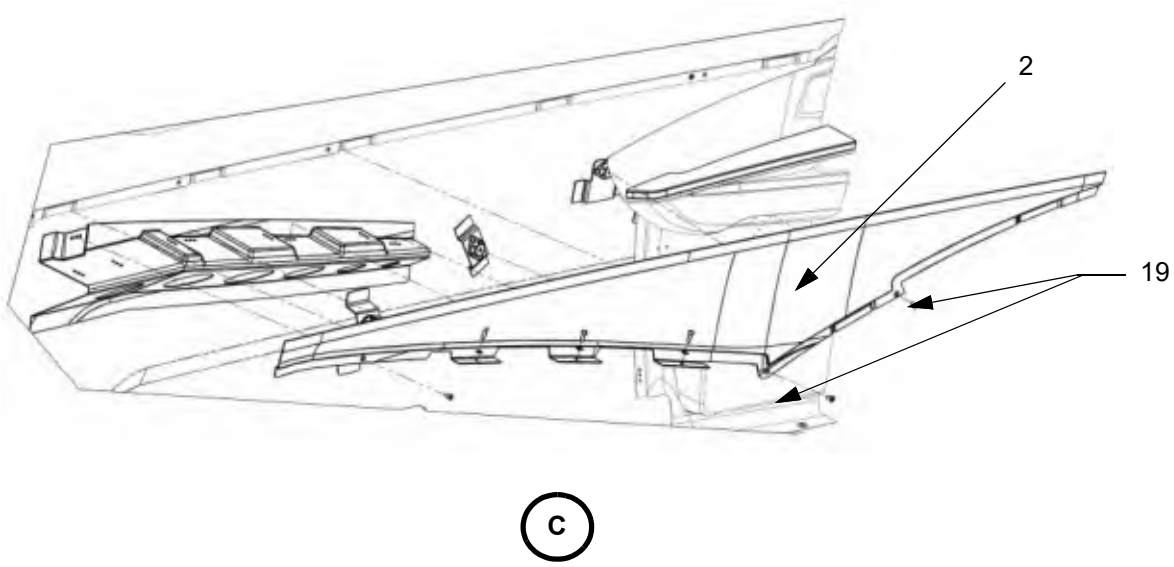

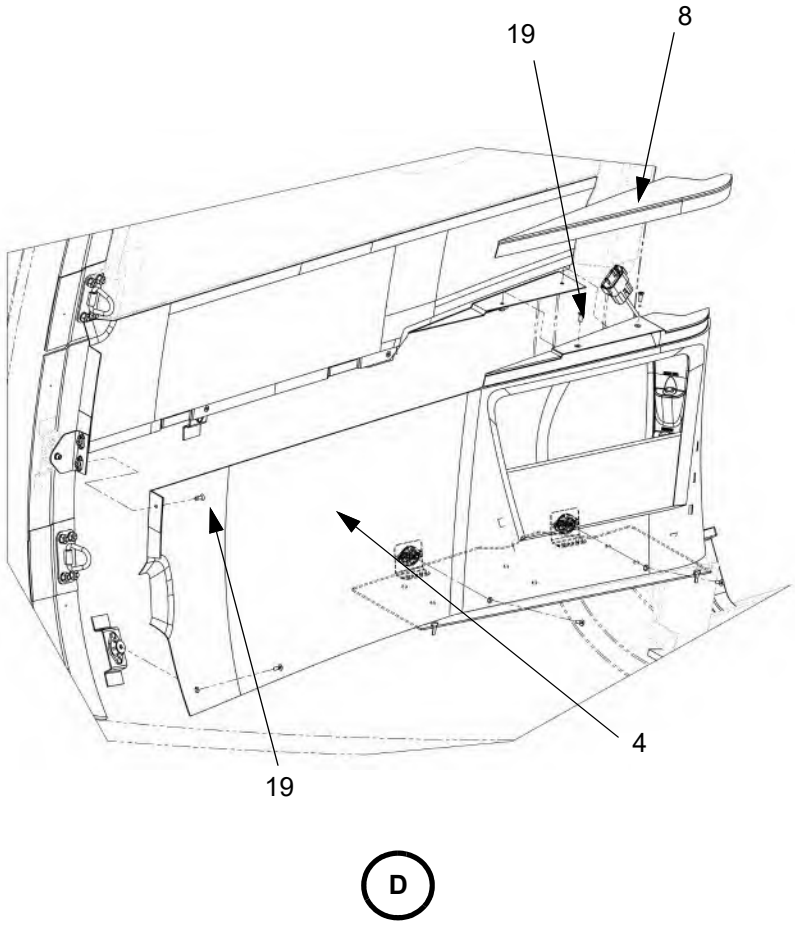

LEGEND

1. Mid Row Lower Panel, LH
2. Mid Row Closeout Panel, LH
3. Mid Row Accessory Closeout Panel, LH
4. Aft Row Lower Panel, LH
5. Aft Row Upper Panel, LH
6. Mid Row Armrest Mount, LH
7. Aft Row Armrest Mount, LH
8. Aft Row Armrest, LH
9. Mid Row Armrest, LH
10. Mid Row Armrest Mount, RH
11. Mid Row Closeout Panel, RH
12. Aft Row Closeout Panel, RH
13. Aft Row Armrest Mount, RH
14. Closeout Panel, RH
15. Aft Row Armrest Panel, RH
16. Mid Row Armrest Panel, RH
17. Mid Row Lower Panel, RH
18. Isolation Bracket
19. Screw
20. Socket Head Screw
21. Washer Head Screw
22. Washer
23. Lock Washer
24. Dimpled Washer

Figure 25-20.2: Lower Finish Panels, Passenger Compartment (Sheet 4 of 7)

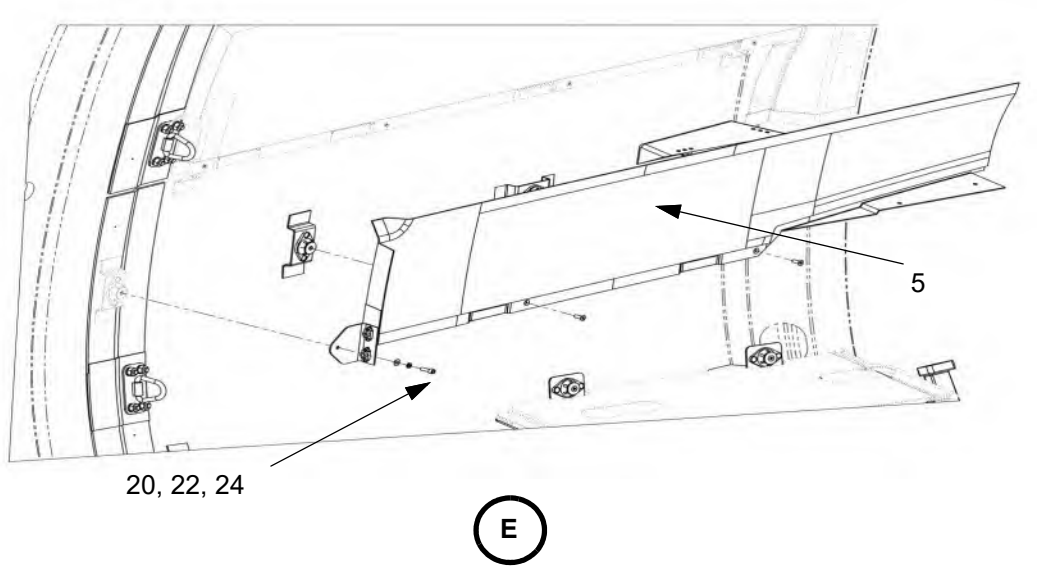

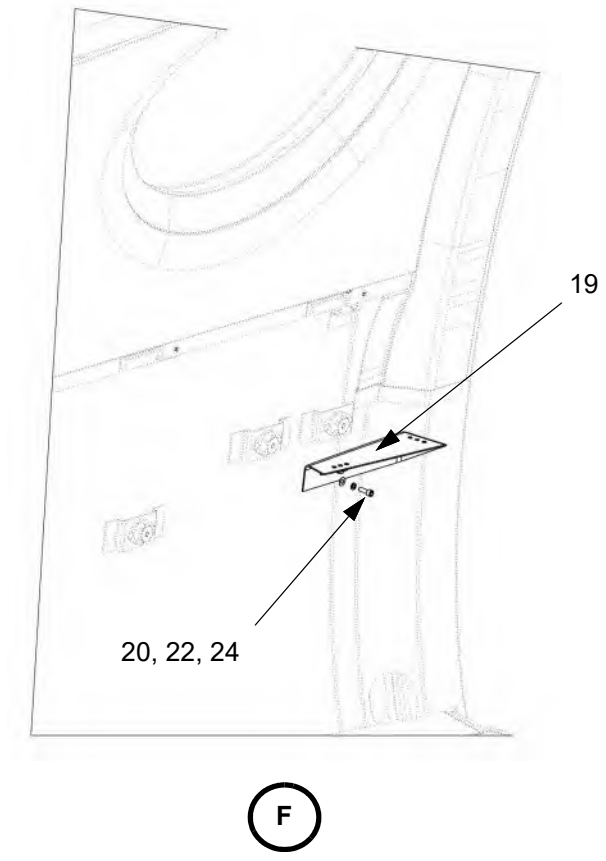

LEGEND

1. Mid Row Lower Panel, LH
2. Mid Row Closeout Panel, LH
3. Mid Row Accessory Closeout Panel, LH
4. Aft Row Lower Panel, LH
5. Aft Row Upper Panel, LH
6. Mid Row Armrest Mount, LH
7. Aft Row Armrest Mount, LH
8. Aft Row Armrest, LH
9. Mid Row Armrest, LH
10. Mid Row Armrest Mount, RH
11. Mid Row Closeout Panel, RH
12. Aft Row Closeout Panel, RH
13. Aft Row Armrest Mount, RH
14. Closeout Panel, RH
15. Aft Row Armrest Panel, RH
16. Mid Row Armrest Panel, RH
17. Mid Row Lower Panel, RH
18. Isolation Bracket
19. Screw
20. Socket Head Screw
21. Washer Head Screw
22. Washer
23. Lock Washer
24. Dimpled Washer

Figure 25-20.2: Lower Finish Panels, Passenger Compartment (Sheet 5 of 7)

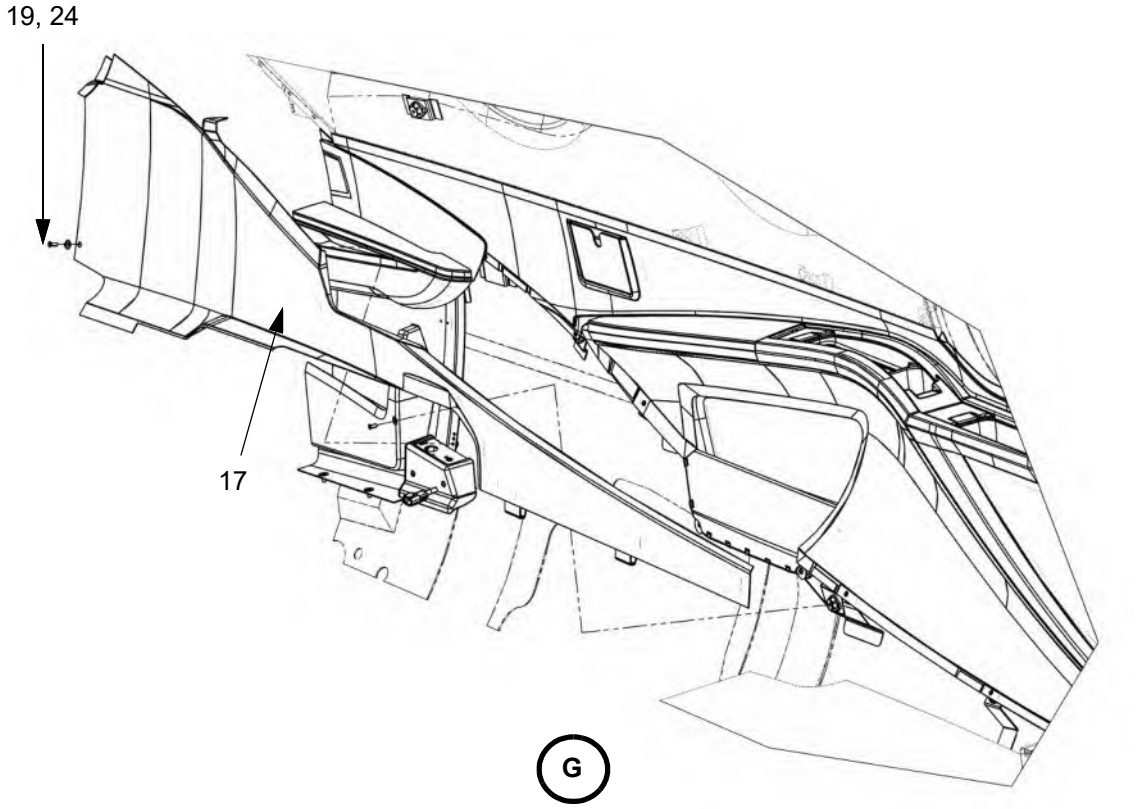

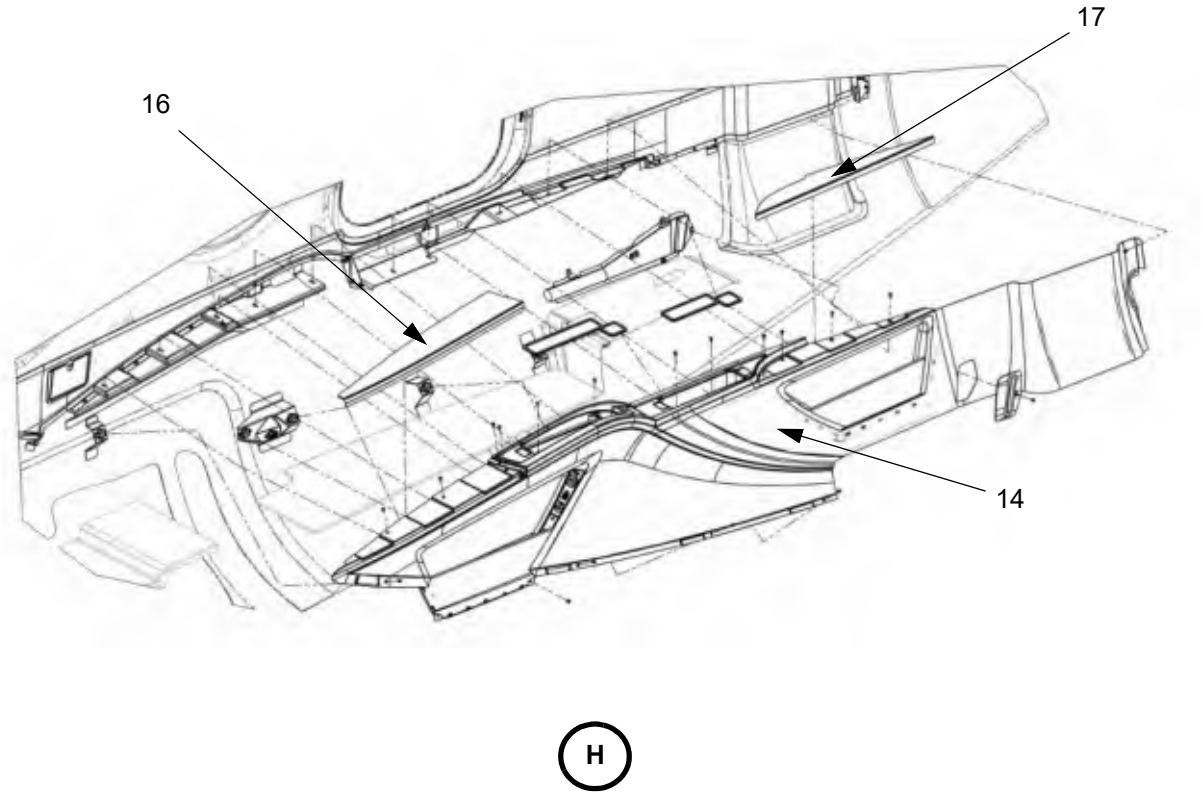

Figure 25-20.2: Lower Finish Panels, Passenger Compartment (Sheet 6 of 7)

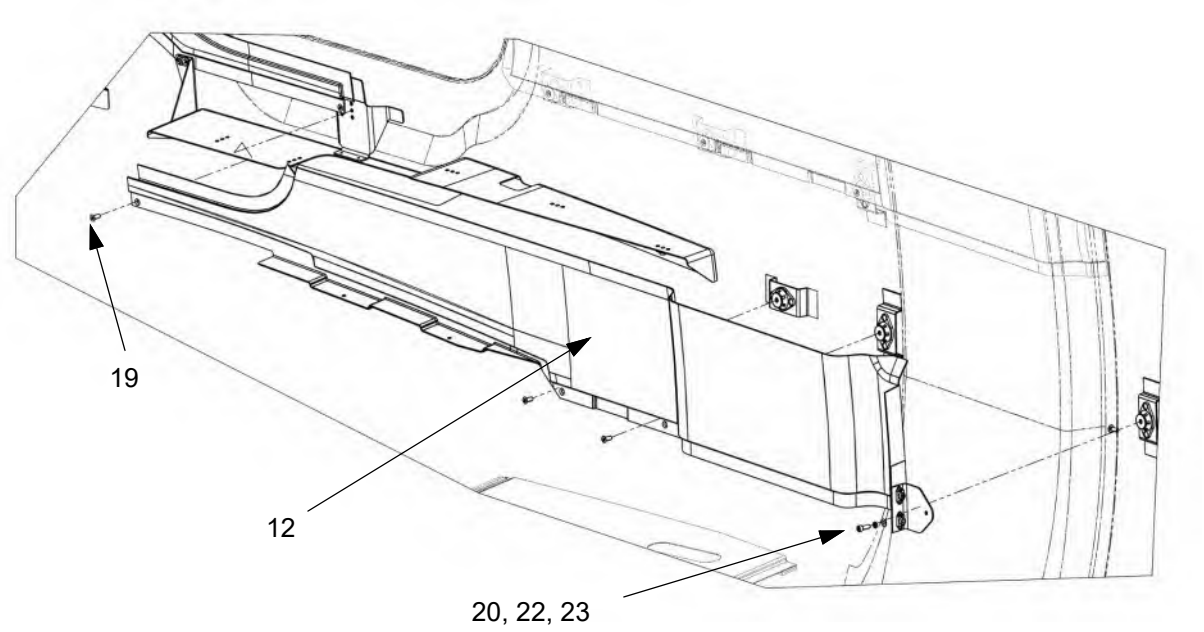

I

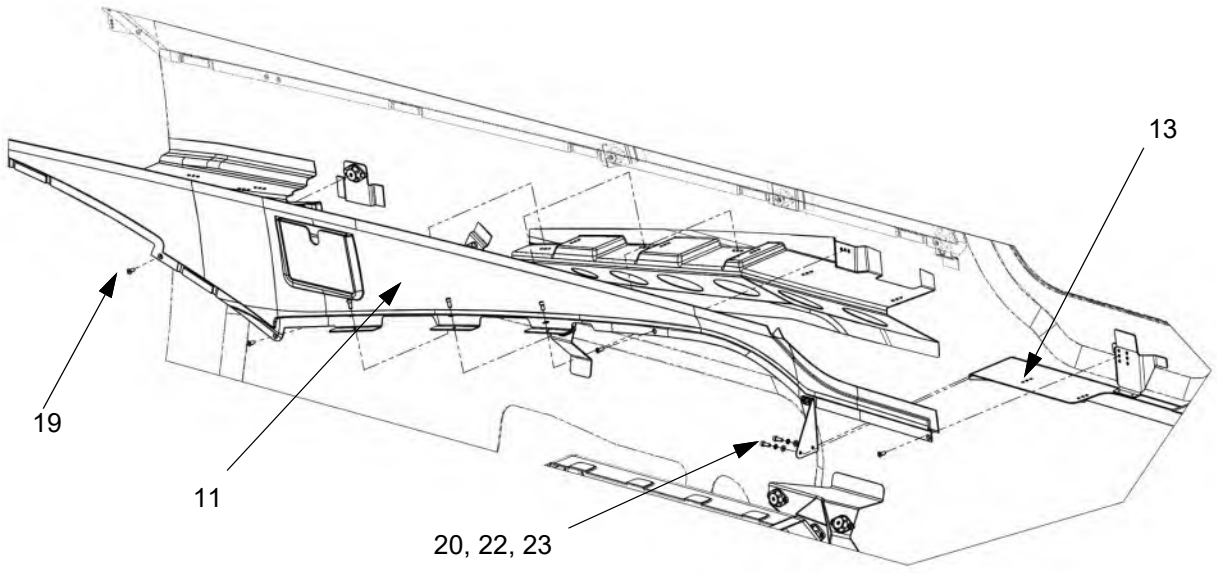

J

Figure 25-20.2: Lower Finish Panels, Passenger Compartment (Sheet 7 of 7)

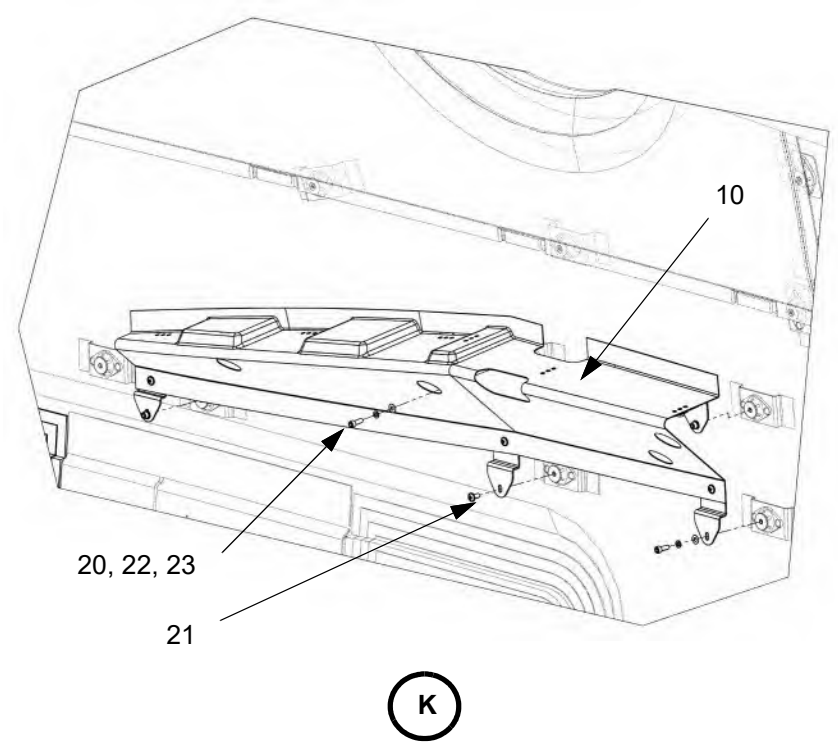

This Page Intentionally Left Blank

CARGO COMPARTMENT

1. Description

The cargo compartment of the airplane is located aft of the aft passenger seats and forward of the aft pressure bulkhead.

Baggage is secured using a cargo net attached to D-rings that surround the perimeter of the fuselage in front of the aft pressure bulkhead.

Note: Total baggage weight for the airplane is 200 lbs maximum.

2. Maintenance Practices

A. Cargo Net

(1) Removal

(a) Unfasten the cargo net from each D-ring in front of the aft pressure bulkhead.

(b) Remove the cargo net.

(2) Installation

(a) Attach the two hook latches of the cargo net to the two D-rings on the baggage compartment floor. One hook clip per D-ring.

(b) Attach the eight snap latches of the cargo net to the D-rings in front of the aft pressure bulkhead. One snap latch per D-ring.

(3) Inspection

(a) Inspect the cargo net attachment hardware for condition and security.

(b) Inspect the webbing of the cargo net for cuts, fraying, stretching, and wear.

(c) Ensure the tightening mechanism of the cargo net functions correctly, loosens for addition of baggage, and holds securely when tightened.

Figure 25-50.1: Cargo Net

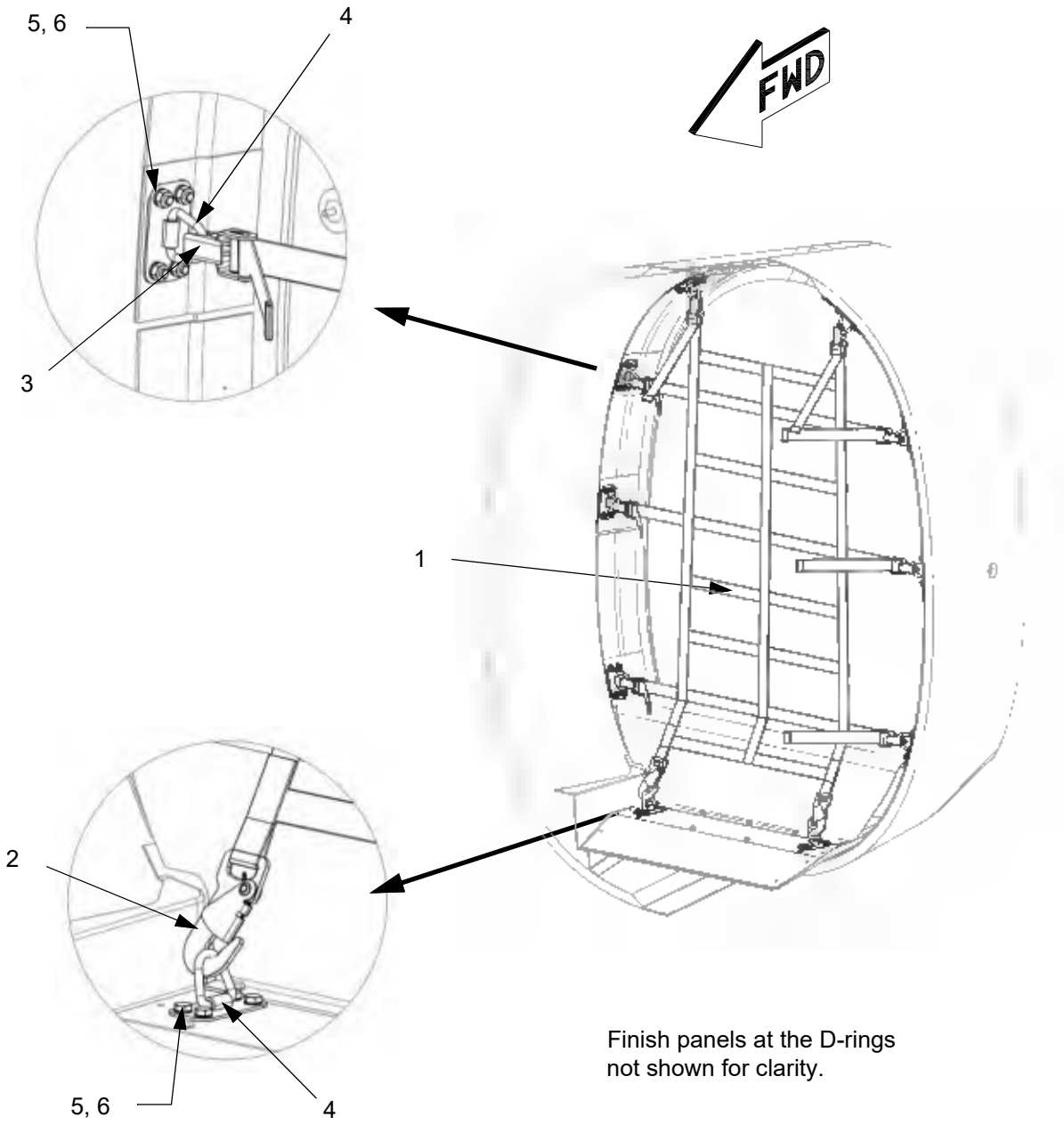

Finish panels at the D-rings not shown for clarity.

LEGEND

1. Cargo Net
2. Hook Latch
3. Snap Latch
4. D-Ring
5. Locknut
6. Washer

B. Aft Pressure Bulkhead Finish Panel

(1) Removal

(a) Remove the cargo net.

(b) Remove the two screws and washers attaching the finish panel to the isolator brackets in front of the aft pressure bulkhead.

(c) Gently pull the finish panel forward to disengage it from the dual lock re-closable fasteners on each side of the panel.

(d) Remove the panel by gently pulling down and forward.

(e) Remove the three screws and washers attaching the left and right perimeter trim panels to the isolator brackets in front of the aft pressure bulkhead.

(f) Gently pull the left perimeter trim panel forward to disengage it from the clips.

(g) Remove the left perimeter trim panel.

(h) Gently pull the right perimeter trim panel forward to disengage it from the clips.

(i) Remove the right perimeter trim panel.

(2) Installation

(a) Align the pins on the right perimeter trim panel with the clips of the aft bulkhead.

(b) Gently push the right perimeter panel aft to engage the pins in the clips.

(c) Align the pins on the left perimeter trim panel with the clips of the aft bulkhead.

(d) Install the three screws and washers that attach the left and right perimeter trim panels to the isolator brackets in front of the aft pressure bulkhead.

(e) Gently push the left perimeter panel aft to engage the pins in the clips.

(f) Insert the top of the finish panel behind the panel perimeter trim panel.

(g) Push the bottom of the panel in and line up the screw holes.

(h) Press the panel against the dual lock re-closable fasteners.

(i) Install the two screws and washers to attach the panel to the isolation brackets.

(j) Install the cargo net.

Figure 25-50.2: Aft Finish Panel

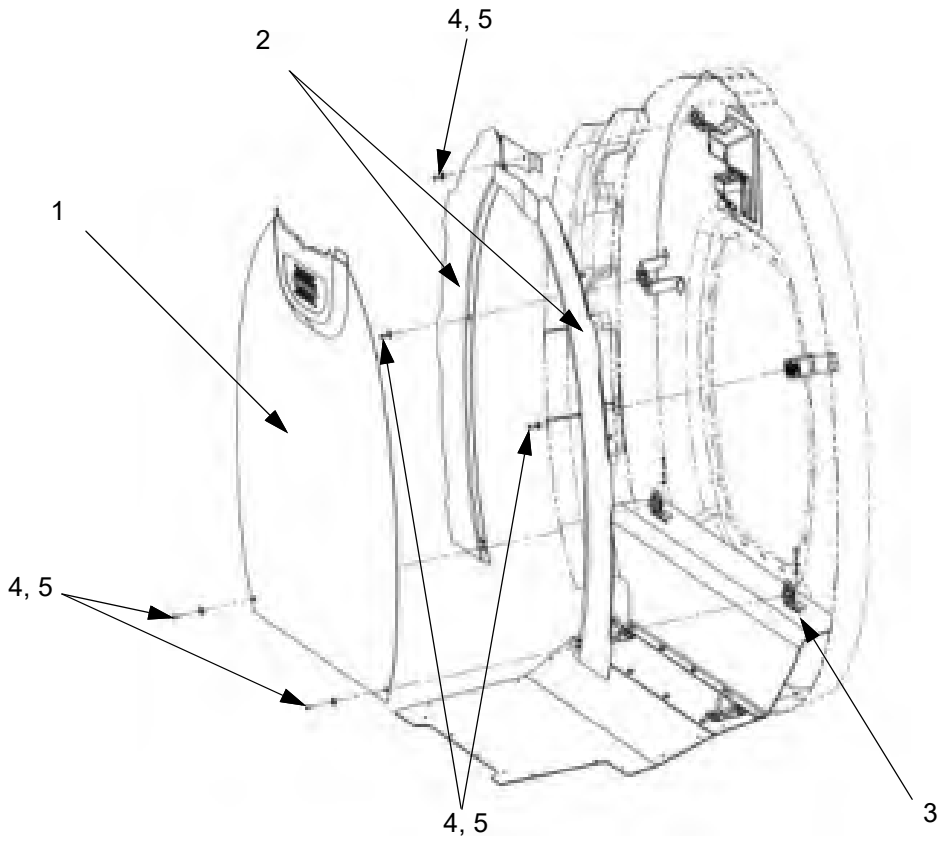

LEGEND

1. Aft Finish Panel
2. Perimeter Trim
3. Isolation Bracket
4. Screw
5. Washer

C. Cargo Compartment Floor Bucket

(1) Removal

(a) Remove the cargo net.

(b) Remove the carpet.

(c) Remove the five screws and washers attaching the cargo floor to the fuselage.

(d) Remove the cargo floor bucket.

(2) Installation

(a) Put the cargo floor bucket in position.

(b) Install the five screws and washers to attach the cargo floor to the fuselage.

(c) Install the carpet.

(d) Install the cargo net.

Figure 25-50.3: Cargo Compartment Floor

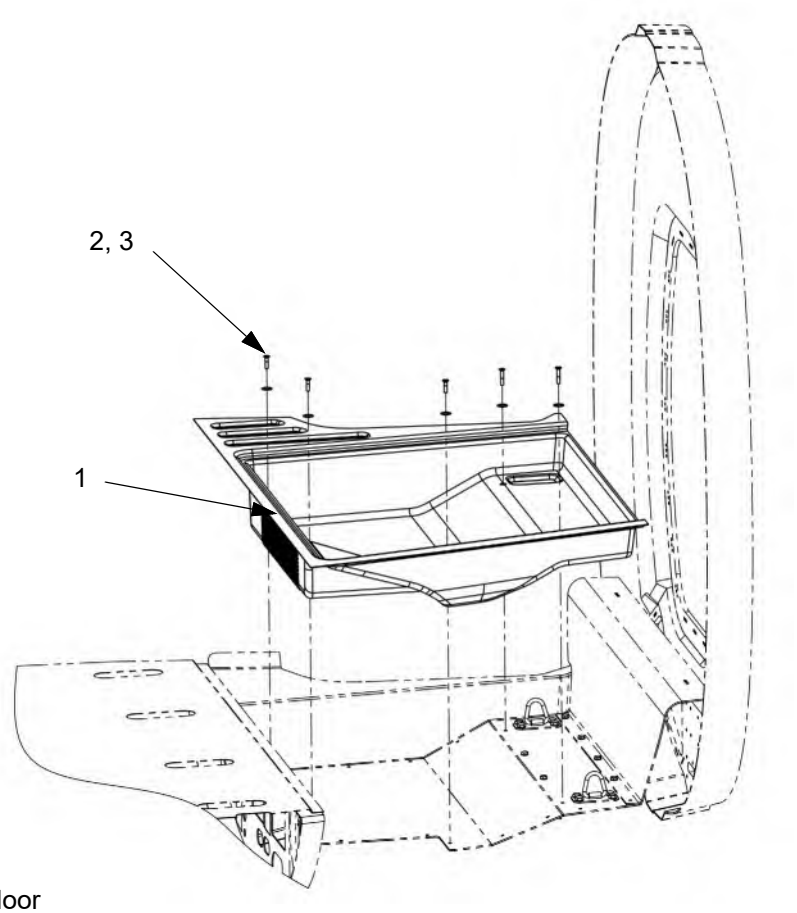

LEGEND

1. Cargo Compartment Floor
2. Screw
3. Washer

This Page Intentionally Left Blank

EMERGENCY EQUIPMENT

1. Description

This airplane has a self-contained Kannad AF Integra Emergency Locator Transmitter (ELT) system compose of an ELT transmitter, mounting bracket, external antenna, remote control panel, and DIN-12 connector.

The ELT transmitter is installed on a shelf aft of the pressure bulkhead on the left side of the empennage. The transmitter uses internal and remote antennas and has a built in GPS providing a more accurate position to be transmitted. The main transmitter control switch is a three position switch labeled “ARM”, “OFF”, and “ON” with a red light that indicates the working mode of the unit. The switch is set to the “ARM” position for normal operations.

Once activated either automatically by G-Switch sensor in the event of a crash or manually, the transmitter operates continuously on 121.5MHz and sends a digital message every 50 seconds on 406.037 MHz.

The ELT Remote Control Panel (RCP) is installed on the upper right quadrant of the instrument panel on the copilot’s side. The RCP contains a rocker switch labeled “ON”, “ARMED”, and “RESET TEST”, and a red LED that comes on when the ELT is on.

2. Maintenance Practices

A. Emergency Locator Transmitter (ELT)

(1) Removal

(a) Remove the pressure bulkhead access panel (refer to Chapter 21-30).

(b) Set the main transmitter control switch to the “OFF” position.

(c) Disconnect the antenna cable.

(d) Disconnect the DIN-12 connector.

(e) Unstrap the transmitter then remove it from the mounting bracket.

(2) Installation

(a) Inspect the strap to ensure there are no traces of wear and tear due to aging. Inspect the strap for wear, contamination, environmental degradation, or other effects. If any of these conditions exist, replace the strap.

(b) Install the transmitter into the mounting bracket with the “Flight Direction Arrow” of the transmitter pointed towards the front of the airplane.

WARNING: The ELT must be installed with the “Flight Direction Arrow” printed on the case pointed in the direction of flight.

(c) Secure the transmitter to the mounting bracket using the strap integral to the bracket. Ensure the buckle is aligned with the horizontal centerline of the transmitter then fasten the strap tightly.

Note: Once installed in the mounting bracket, ensure the transmitter is firmly attached in its bracket by trying to extract it manually, thereby verifying there is no play and that it remains attached when extraction from the bracket is attempted.

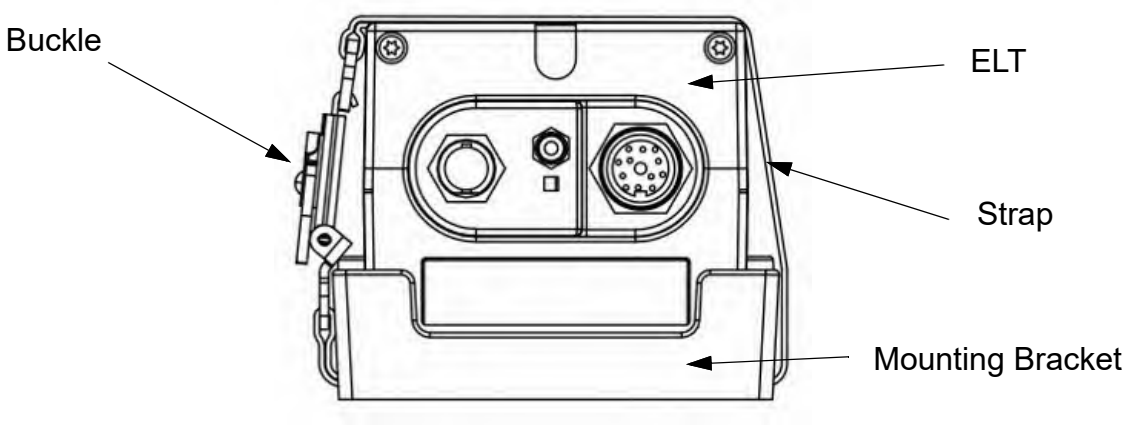

(d) Connect the antenna cable.

(e) Connect the DIN-12 connector.

(f) Do operational tests of the ELT (latest revision of the Kannad Aviation AF Integra/AF-H Integra ELT Operation Manual, P/N DOC09078C).

(g) Set the main transmitter switch to “ARM”.

(h) Install the pressure bulkhead access panel (refer to Chapter 21-30).

(3) Inspection

Refer to the latest revision of Orolia Service Letter SL S18XX501-25-01, Service Bulletin, S1800000-25-00, and Kannad aviation AF Integra/AF-H Integra ELT Operation Manual, P/N DOC09078C.

B. ELT Remote Control Panel (RCP)

(1) Removal

(a) Remove the four screws, washers, and locknuts attaching the RCP to the instrument panel.

(b) Pull the RCP out of the instrument panel then disconnect the DIN-12 connector.

(c) Remove the RCP.

(2) Installation

(a) Connect the DIN-12 connector to the RCP.

(b) Insert the RCP into the instrument panel.

(c) Attach the RCP to the instrument panel using four screws, washers, and locknuts.

(d) Do operational tests of the ELT (current revision of the Kannad aviation AF Integra/AF-H Integra ELT Operation Manual, P/N DOC09078C).

C. ELT Antenna (ANT AV 300)

(1) Removal

(a) Remove the pressure bulkhead access panel (refer to Chapter 21-30).

(b) Disconnect the antenna cable from the antenna.

(c) Remove the nuts, washers, and screws attaching the antenna to the fuselage.

(d) Remove the antenna and gasket from the top of the fuselage.

(e) Remove any remaining sealant from the fuselage.

(2) Installation

(a) Use Scotch-Brite™ to remove any aluminum oxide from the base of the antenna.

(b) Clean the contact area on the fuselage and the antenna using isopropyl alcohol then let it to dry.

(c) Align and position the gasket and antenna on top of the fuselage.

(d) Insert the attachment screws through the mounting holes in the antenna.

(e) Install the washers and nuts securing the antenna to the fuselage. Torque the nuts 20 to 25 in-lbs.

(f) Fillet a bead of white Dow Corning 748 sealant, or equivalent, around the perimeter of the antenna.

(g) Connect the antenna cable to the antenna.

(h) Verify continuity between the base of the antenna and the nearest ground strap for a maximum of 1 ohm resistance.

(i) Install the pressure bulkhead access panel (refer to Chapter 21-30).

3. Troubleshooting

Refer to the current revision of Kannad Aviation Operation Manual, DOC09078E.

Figure 25-60.1: ELT Installation (Sheet 1 of 2)

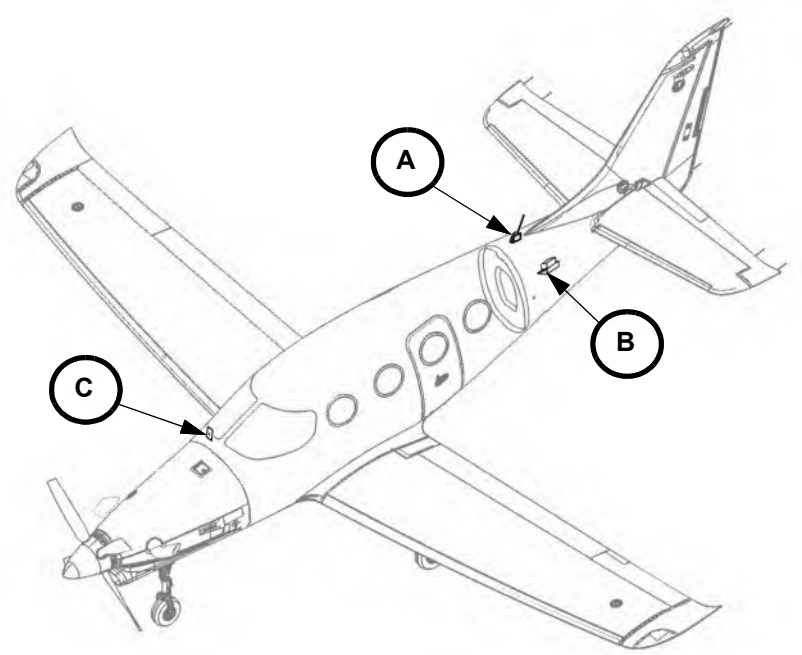

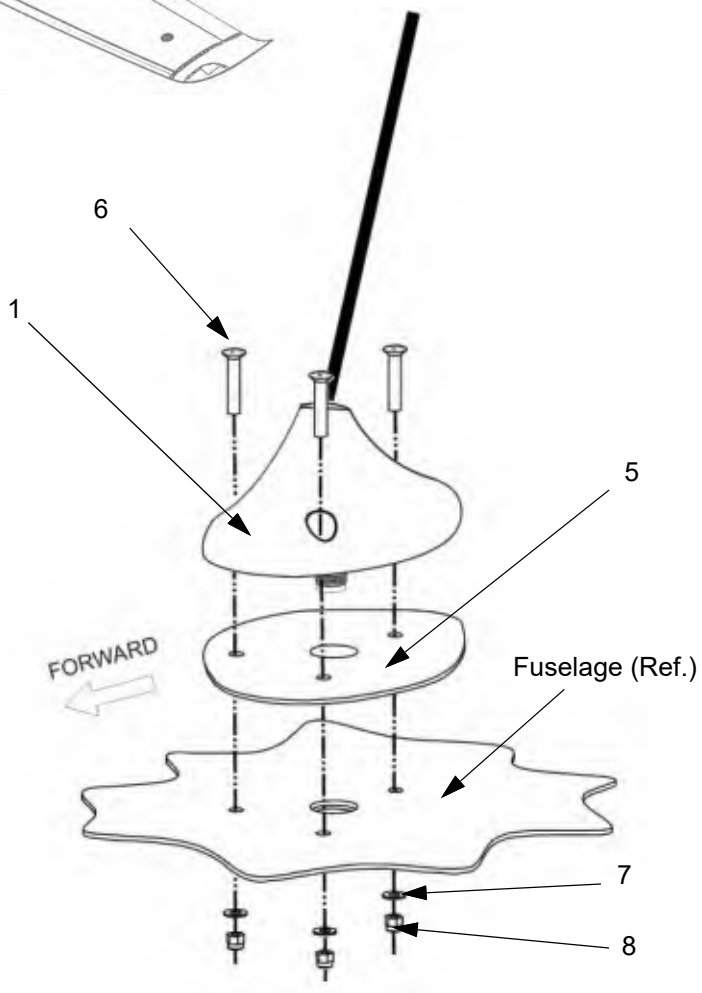

LEGEND

1. ANT AV 300 Antenna
2. ELT
3. ELT Mount
4. RC200 RCP
5. Conductive Gasket
6. Screw
7. Washer
8. Locknut

Figure 25-60.1: ELT Installation (Sheet 2 of 2)

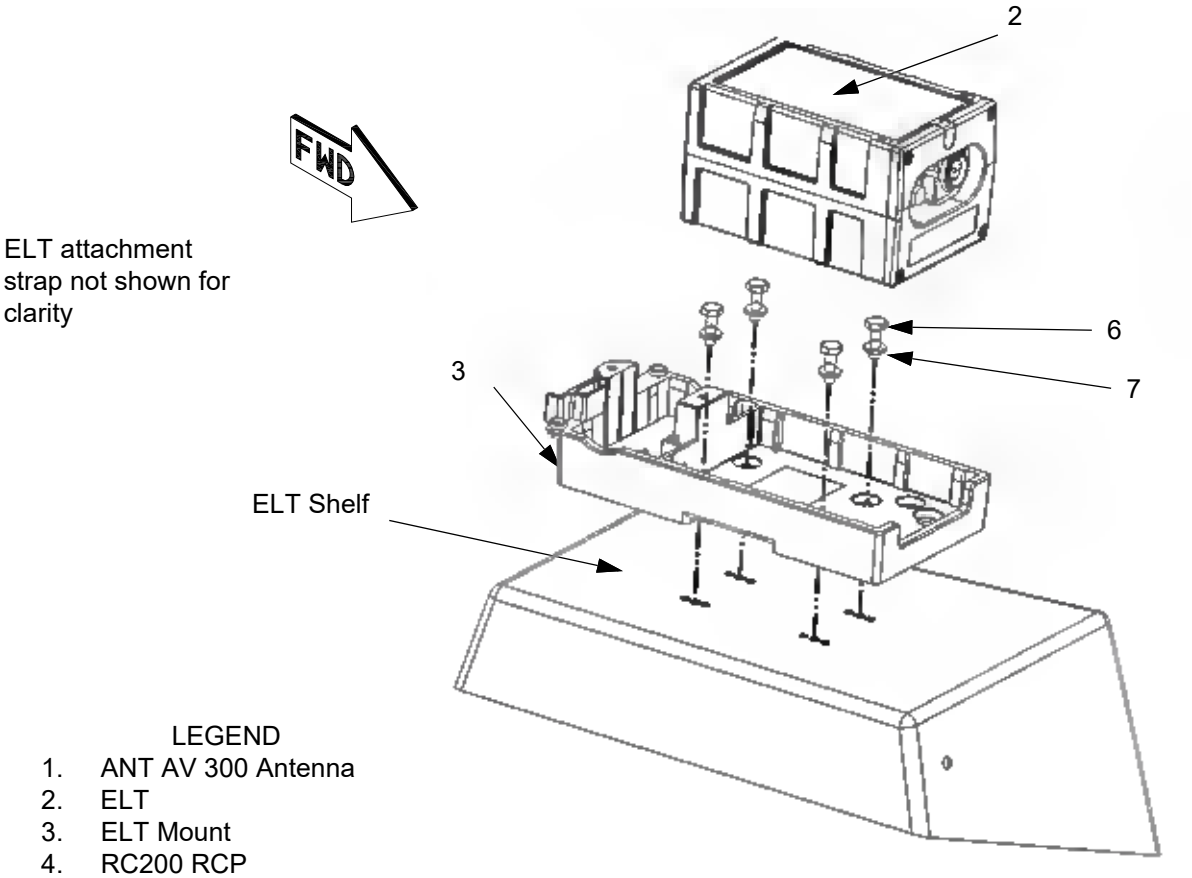

LEGEND

1. ANT AV 300 Antenna
2. ELT
3. ELT Mount
4. RC200 RCP
5. Conductive Gasket
6. Screw
7. Washer
8. Locknut

Detail B

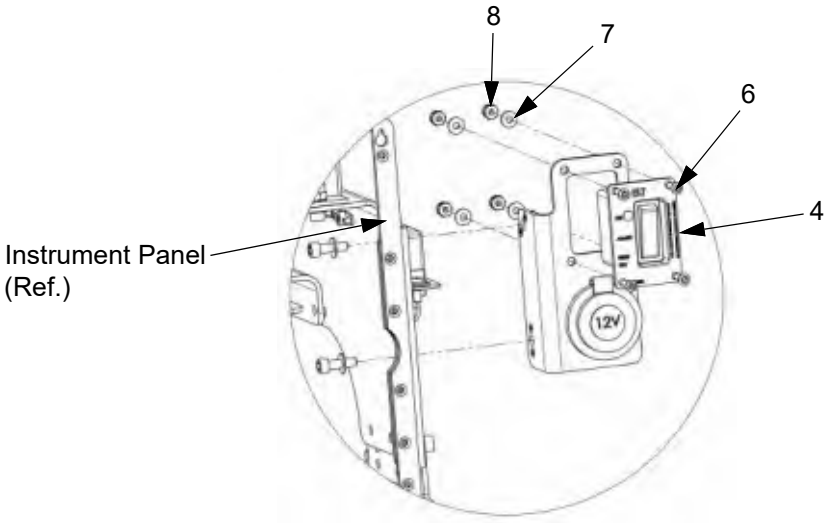

Detail C

This Page Intentionally Left Blank

INSULATION

1. Description

Both the walls and floors of the crew, passenger, and baggage compartment of this airplane have a layer of sound damper material. The sound damper material is on the underside of the floors with the tread surface finished using carpet. The walls are finished using insulation covered by interior panels.

2. Maintenance Practices

A. Insulation

(1) Removal

(a) Remove the cabin interior finish panel (refer to Chapter 25-10 and 25-20).

(b) Cut the joint sealing tape at the butt joint between the section of insulation to be removed and the adjoining section.

(c) Remove the retaining discs attaching the section of insulation to the support spikes.

(d) Remove the insulation.

Note: The insulation in the overhead is attached to the fuselage using hook and loop tape.

(2) Installation

(a) Cut new insulation to the size required.

(b) Reseal the insulation bag using hardware tape.

(c) Put a 2” by 2” piece of hardware tape on both sides of the insulation bag where the support spikes will penetrate.

(d) Press a piece of mating hook tape onto each piece of loop tape on the fuselage.

(e) Remove the release liner from the hook tape strip.

(f) Position the section of insulation against the fuselage then press it onto the support spikes. Firmly press the bag onto the exposed adhesive of the hook strip.

Note: Do not compress the insulation bag too much.

(g) Install the retaining discs.

(h) Tape the butt joints between the new and existing insulation bags.

(i) Install the interior finish panel (refer to Chapter 25-10 and 25-20).

(3) Inspection

(a) Remove the cabin interior finish panels (refer to Chapter 25-10 and 25-20).

(b) Inspect the insulation for condition and security of attachment.

(c) Inspect the support spikes and hook and loop tape for condition and security of attachment.

Figure 25-80.1: Insulation (Sheet 1 of 2)

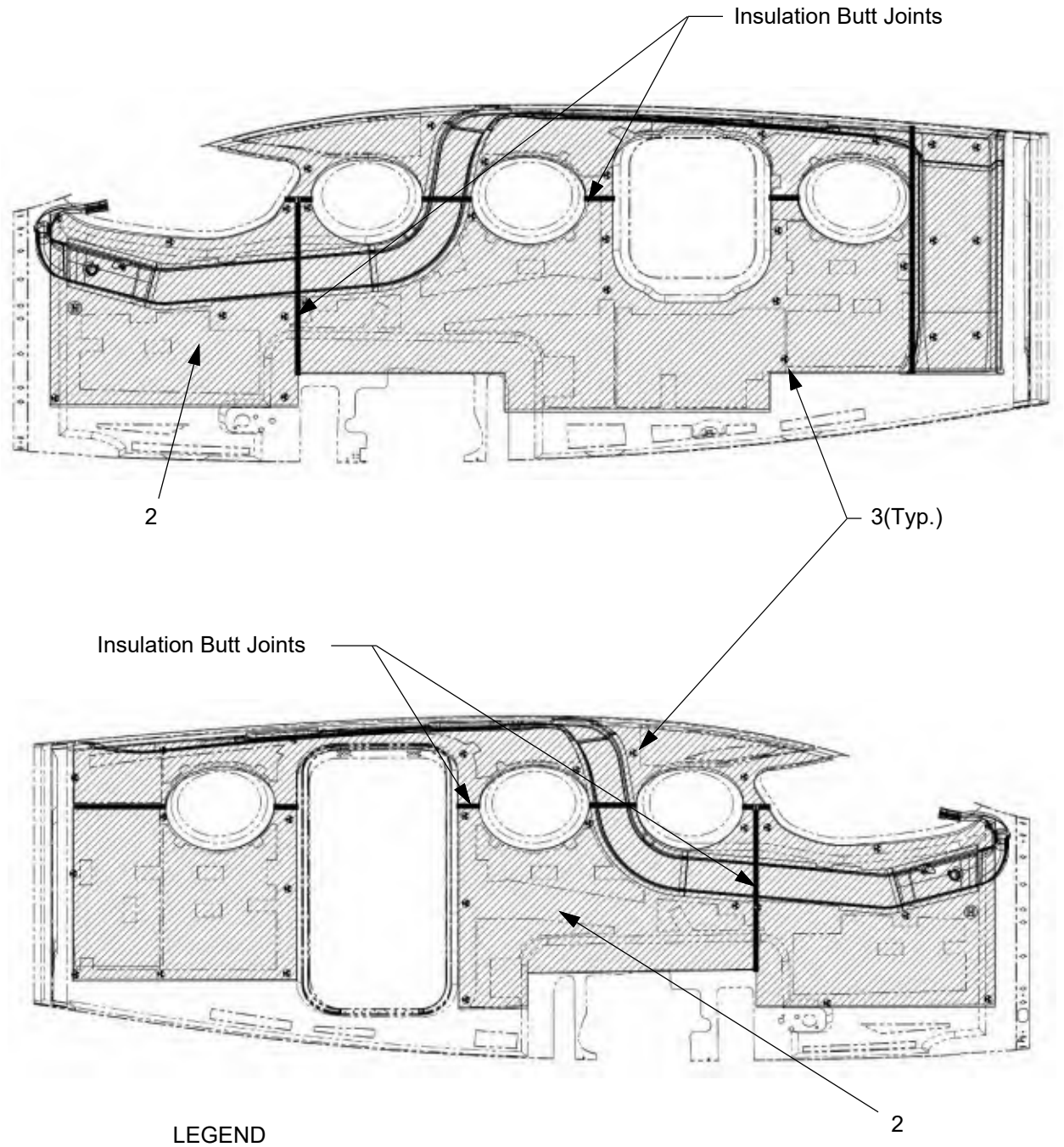

LEGEND

1. Sound Damper Material
2. Insulation
3. Insulation Support Spike
4. Hook and Loop Tape

Figure 25-80.1: Insulation (Sheet 2 of 2)

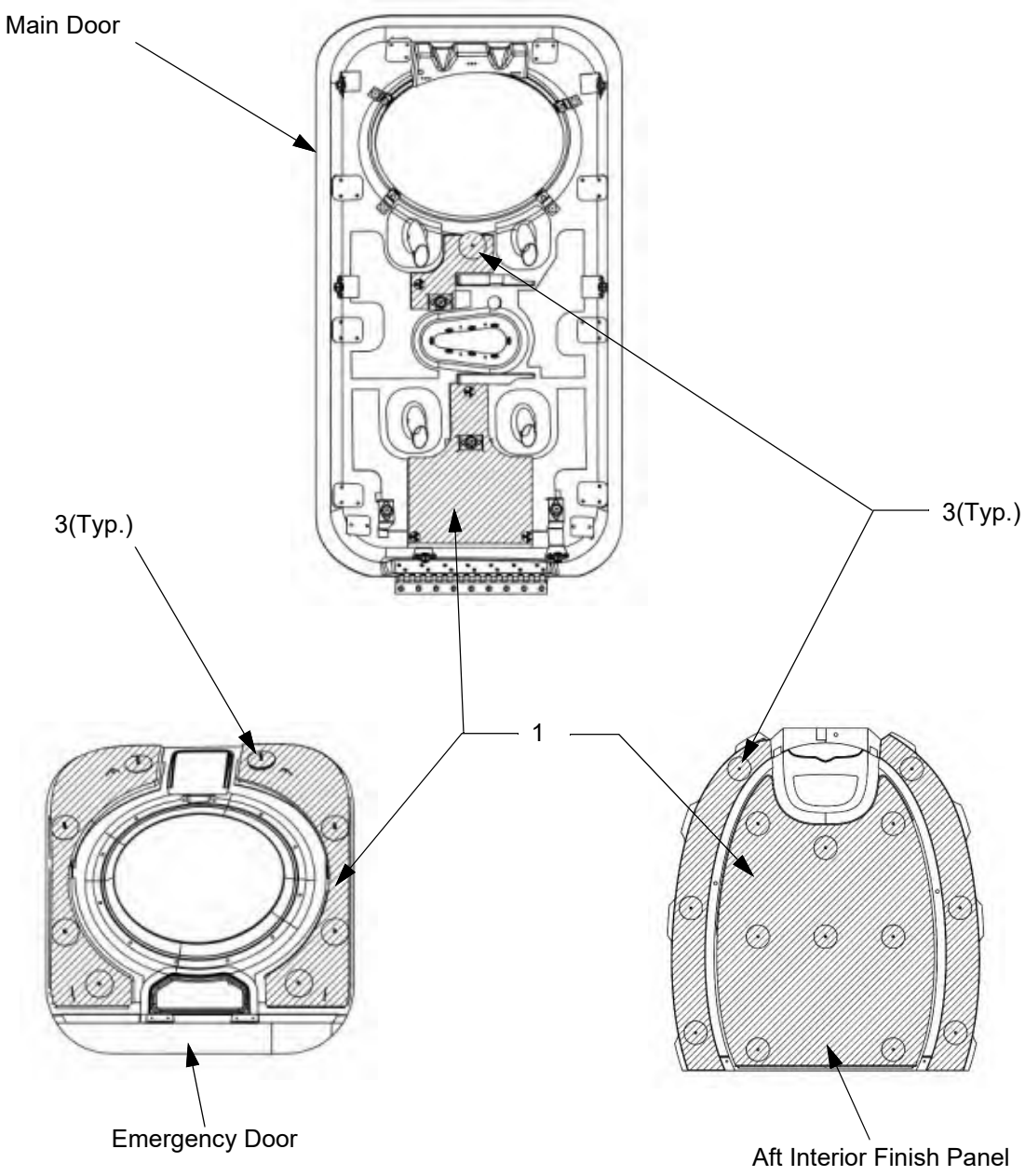

LEGEND

1. Sound Damper Material
2. Insulation
3. Insulation Support Spike
4. Hook and Loop Tape

B. Sound Damper on the Fuselage

(1) Removal

(a) Remove the cabin interior panel to access the cabin wall or remove the carpet to access the cabin floor. Refer to Chapter 25-10 and 25-20.

(b) Remove the crew or passenger seats as applicable. Refer to Chapter 25-10 and 25-20.

(c) Remove the floor (refer to Chapter 53-20), as applicable.

(d) Remove the insulation, as applicable.

(e) Remove the damper material.

Note: Sound damper material on the floors is installed on the underside of the flooring access panels, under the flooring, and on the fuselage underneath the flooring. To access the damper material remove the access panel or floor, as applicable.

WARNING: Do not use metallic scrapers that could damage the fuselage during adhesive removal. Plastic scrapers are recommended.

(2) Installation

(a) Cut the new damper material to the shape and size required.

Note: Use scissors or a sharp knife to cut the damper material. If a knife is used, always cut down through the aluminum side of the damper material, orienting the aluminum face up and visible when cutting.

Note: Avoid excessive bending, scratching, denting, or cutting of the damper material during handling and installation.

(b) Clean the bonding surface of the fuselage using isopropyl alcohol. Let the cleaned area dry completely.

(c) Remove the release liner from the damper material then press the damper material into place. Apply firm pressure over the entire surface of the damper material. Use of a roller is recommended.

(d) Install the insulation as applicable.

(e) Install the interior panel (refer to Chapter 25-10 and 25-20), access panel (refer to Chapter 6), or floor (refer to Chapter 53-20) as applicable.

(f) Install the carpet as applicable. Refer to Chapter 25-10 and 25-20.

Figure 25-80.2: Sound Damper on the Fuselage (Sheet 1 of 6)

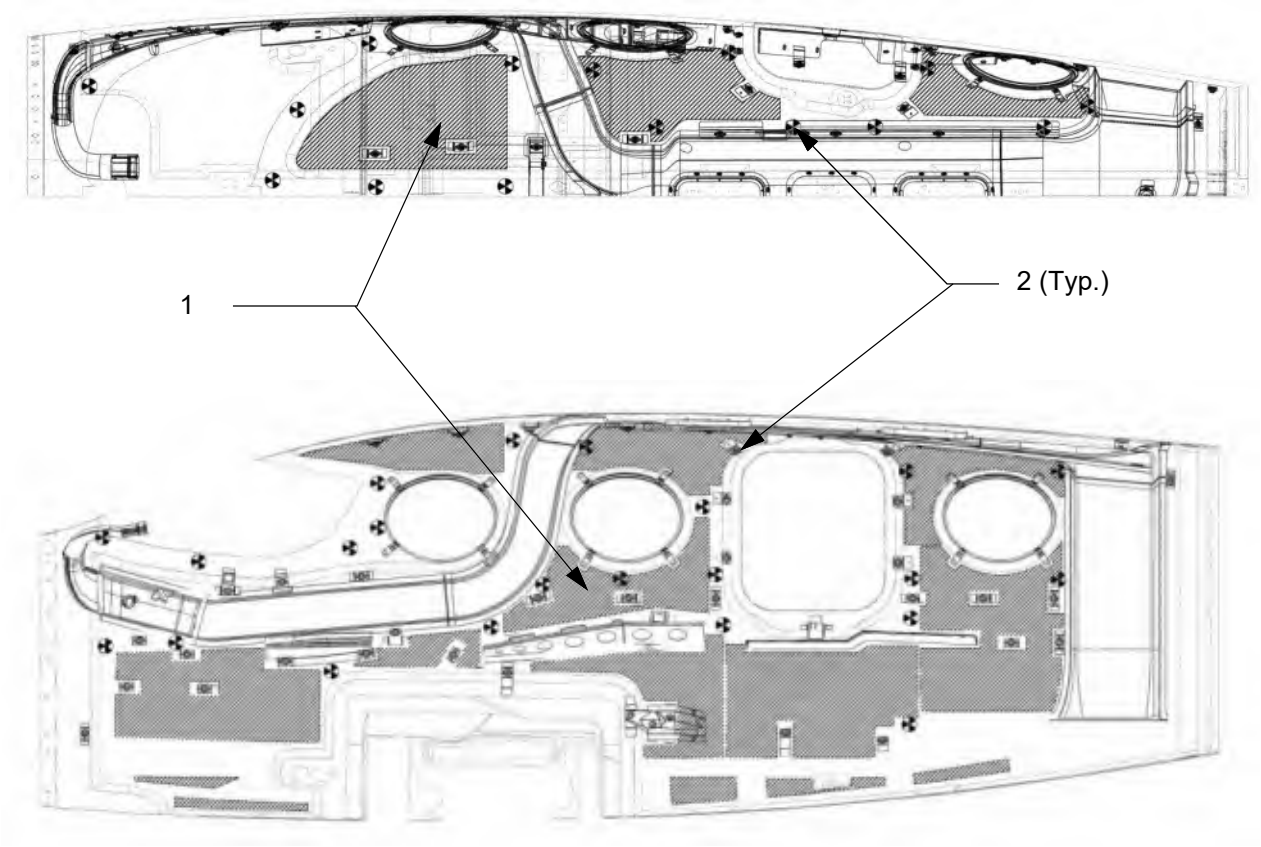

LEGEND

1. Sound Damper Material
2. Insulation Support Spike

Figure 25-80.2: Sound Damper on the Fuselage (Sheet 2 of 6)

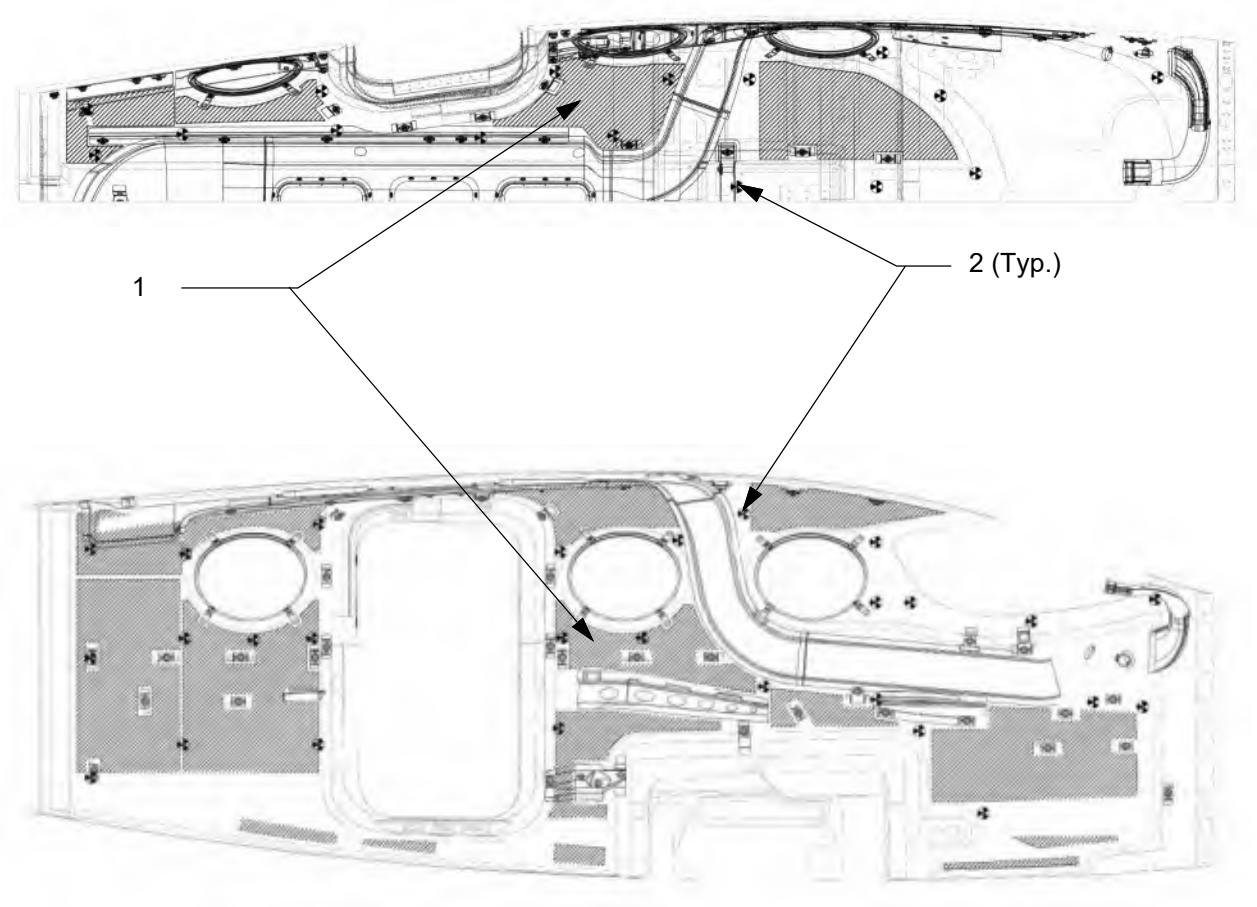

LEGEND

1. Sound Damper Material
2. Insulation Support Spike

Figure 25-80.2: Sound Damper on the Fuselage (Sheet 3 of 6)

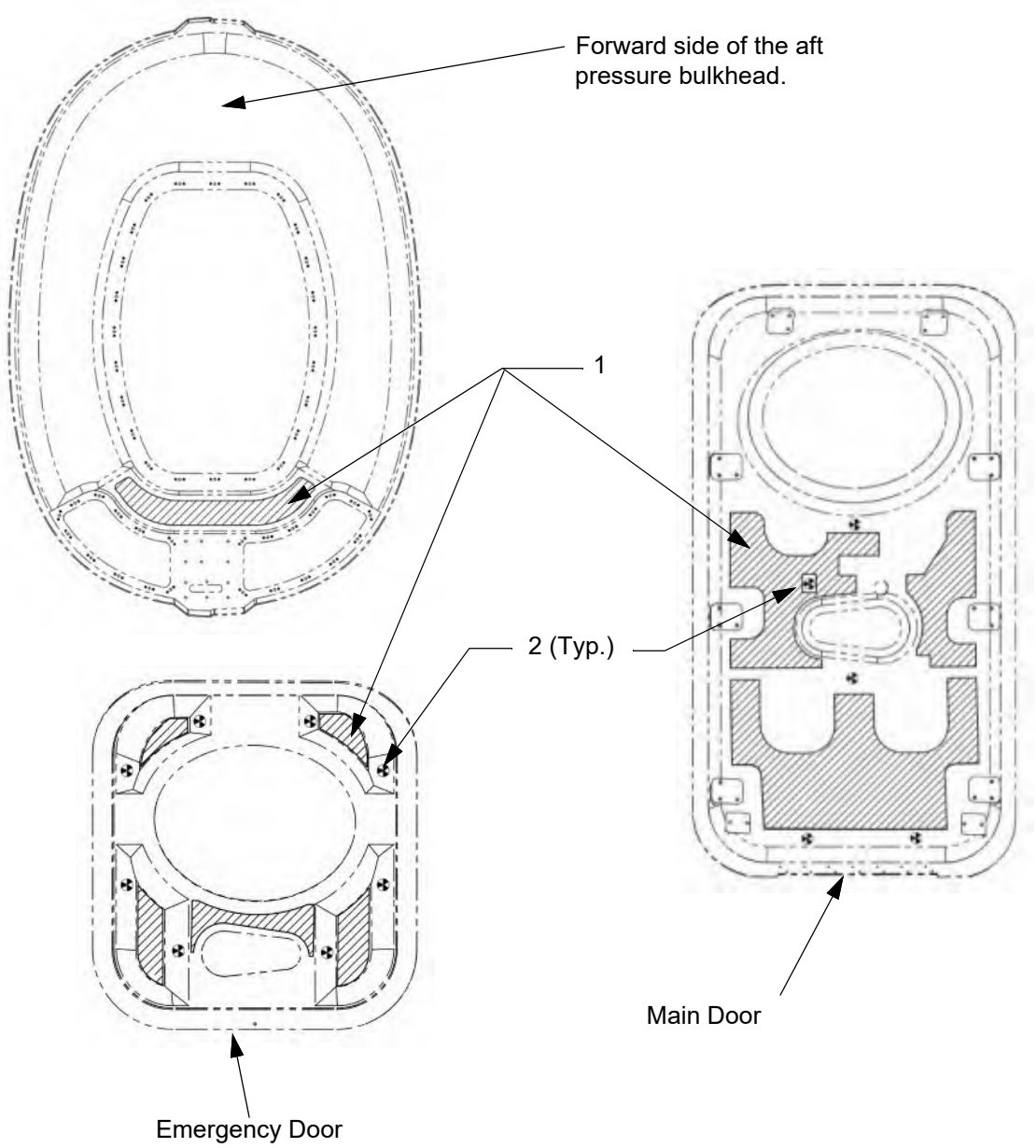

LEGEND

1. Sound Damper Material
2. Insulation Support Spike

Figure 25-80.2: Sound Damper on the Fuselage (Sheet 4 of 6)

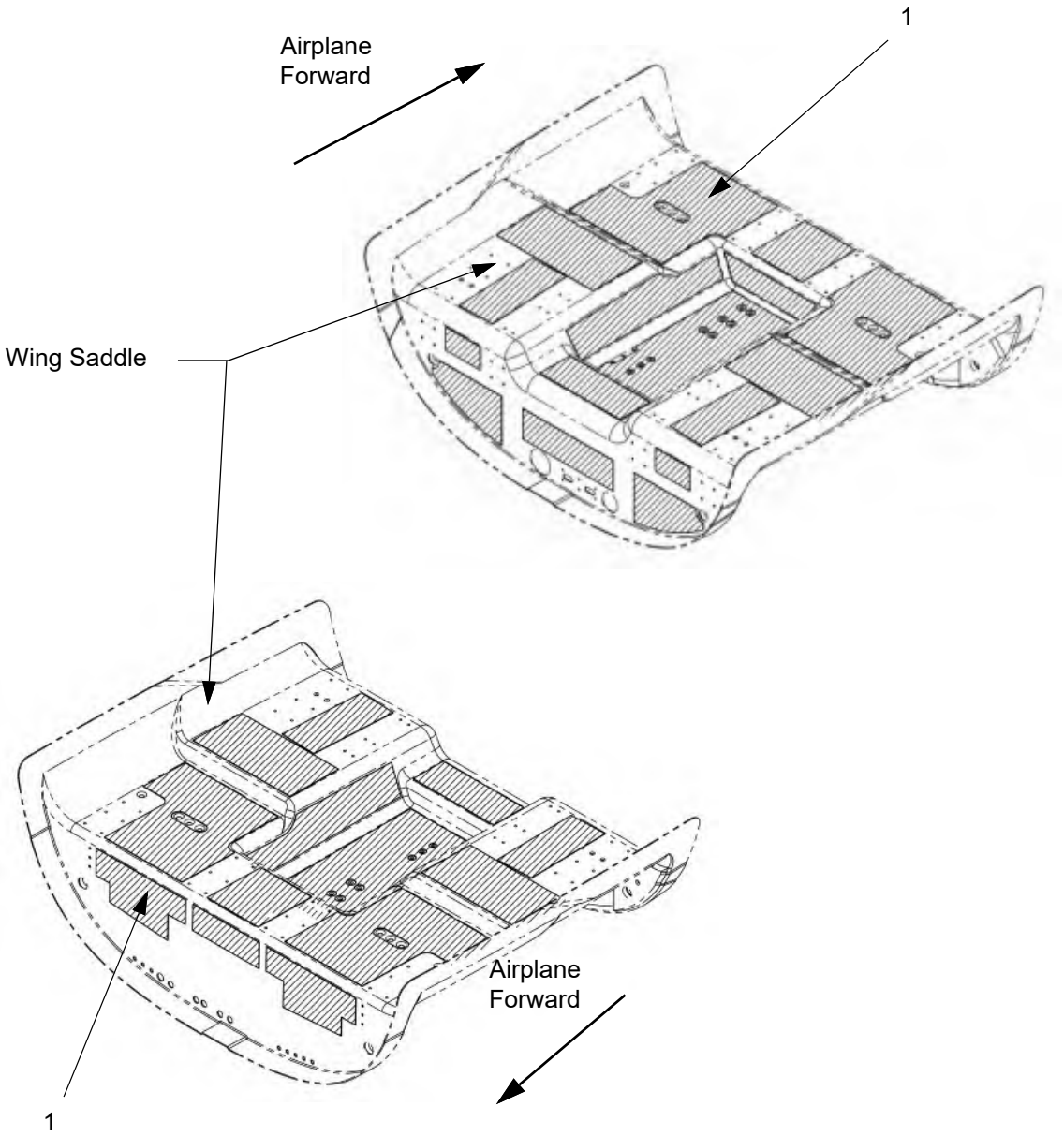

LEGEND
1. Sound Damper Material
2. Insulation Support Spike

Figure 25-80.2: Sound Damper on the Fuselage (Sheet 5 of 6)

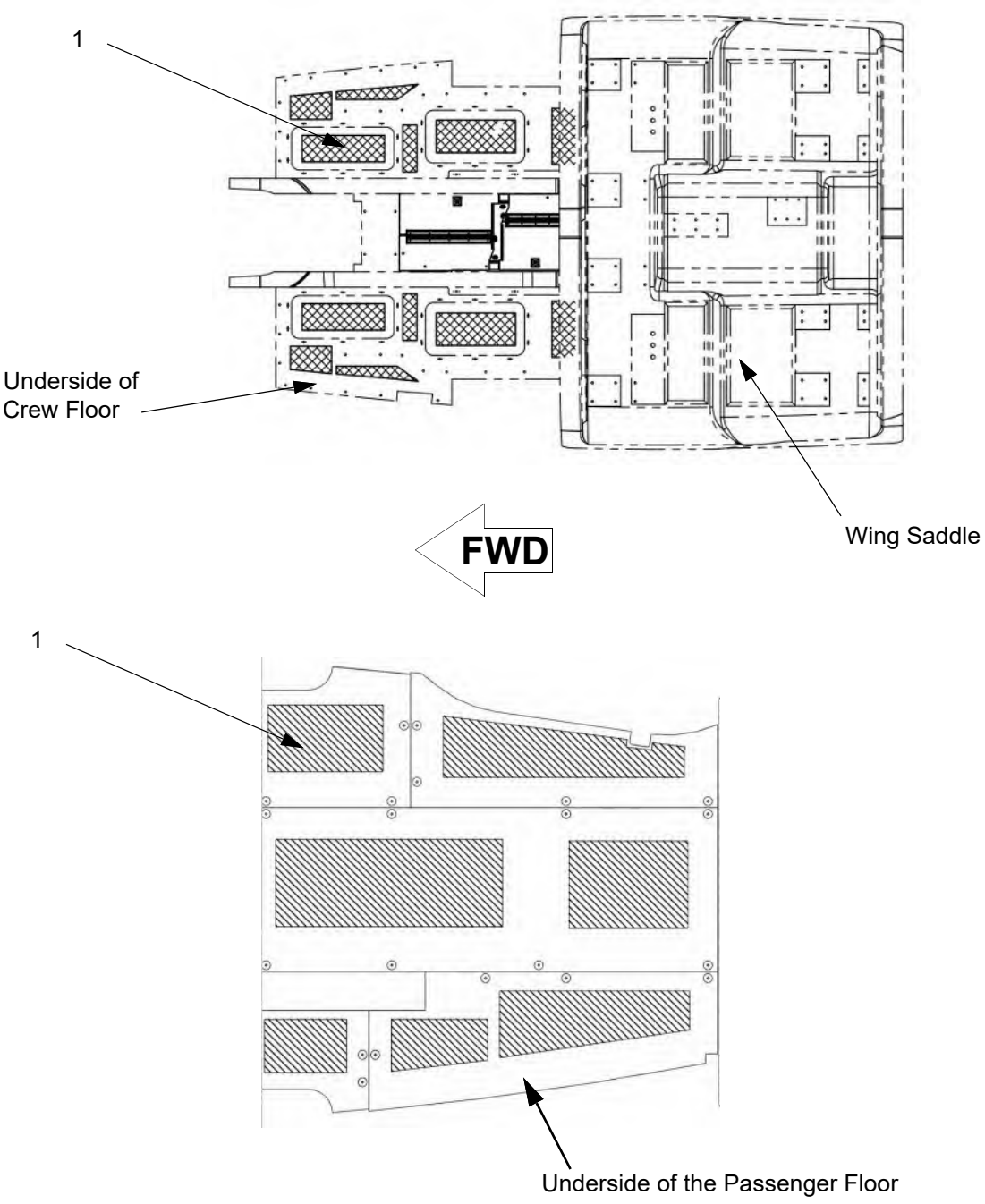

LEGEND

1. Sound Damper Material
2. Insulation Support Spike

Figure 25-80.2: Sound Damper on the Fuselage (Sheet 6 of 6)

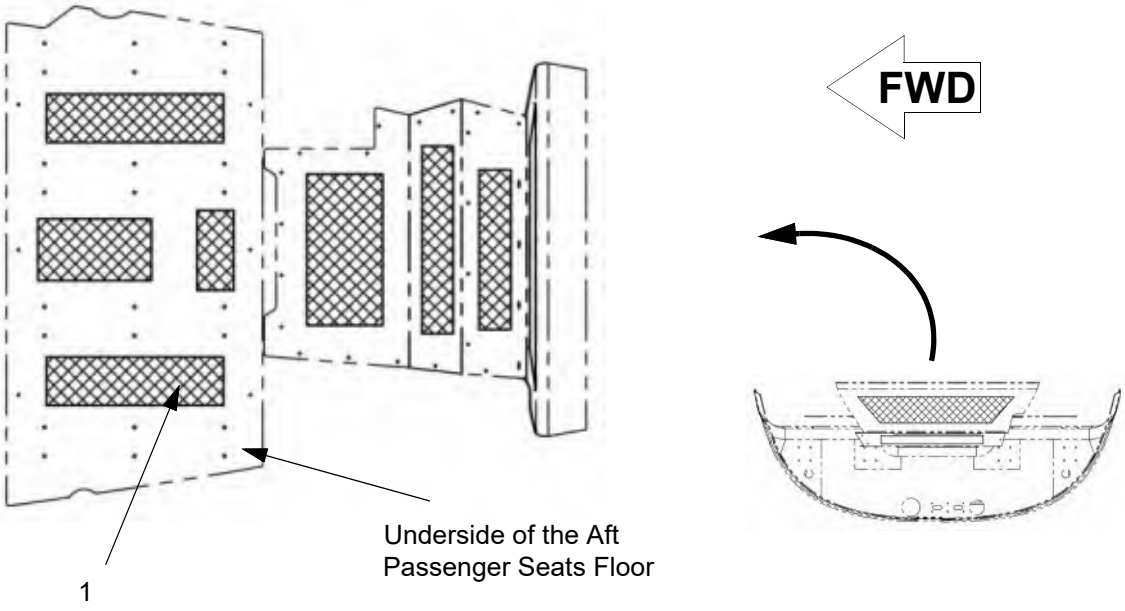

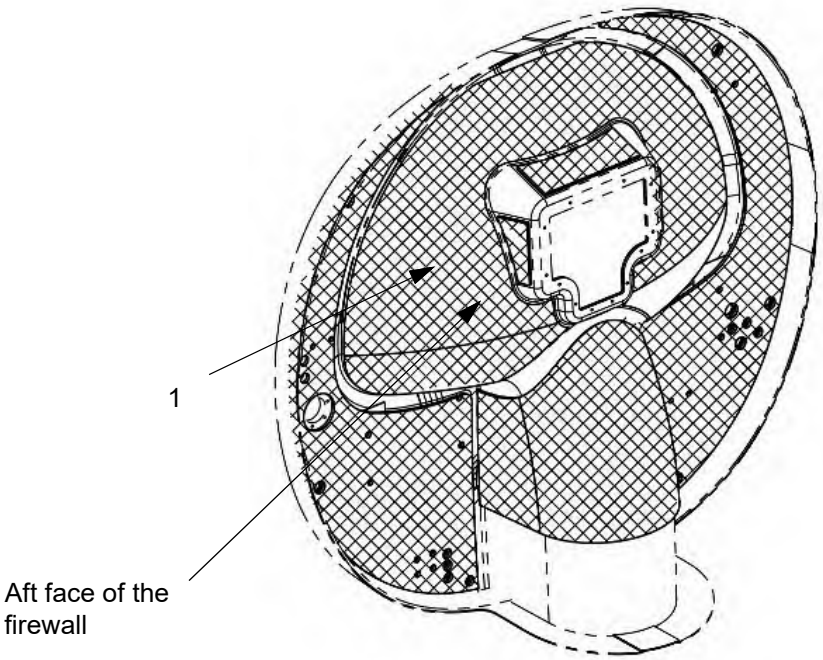

LEGEND

1. Sound Damper Material
2. Insulation Support Spike

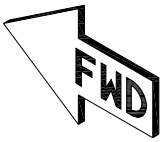

C. Sound Damper on the Interior Finish Panels

(1) Removal

(a) Remove the cabin interior panel. Refer to Chapter 25-10 and 25-20.

(b) Remove the damper material.

WARNING: Do not use metallic scrapers that could damage the finish panel during adhesive removal. Plastic scrapers are recommended.

(2) Installation

(a) Cut the new damper material to the shape and size required.

Note: Use scissors or a sharp knife to cut the damper material. If a knife is used, always cut down through the aluminum side of the damper material, orienting the aluminum face up and visible when cutting.

Note: Avoid excessive bending, scratching, denting, or cutting of the damper material during handling and installation.

(b) Clean the bonding surface of the fuselage using a 50/50 solution of isopropyl alcohol and water. Let the cleaned area dry completely.

(c) Remove the release liner from the damper material then press the damper material into place. Apply firm pressure over the entire surface of the damper material. Use of a roller is recommended.

(d) Install the interior panel (refer to Chapter 25-10 and 25-20).

Figure 25-80.3: Sound Damper on the Interior Finish Panels (Sheet 1 of 3)

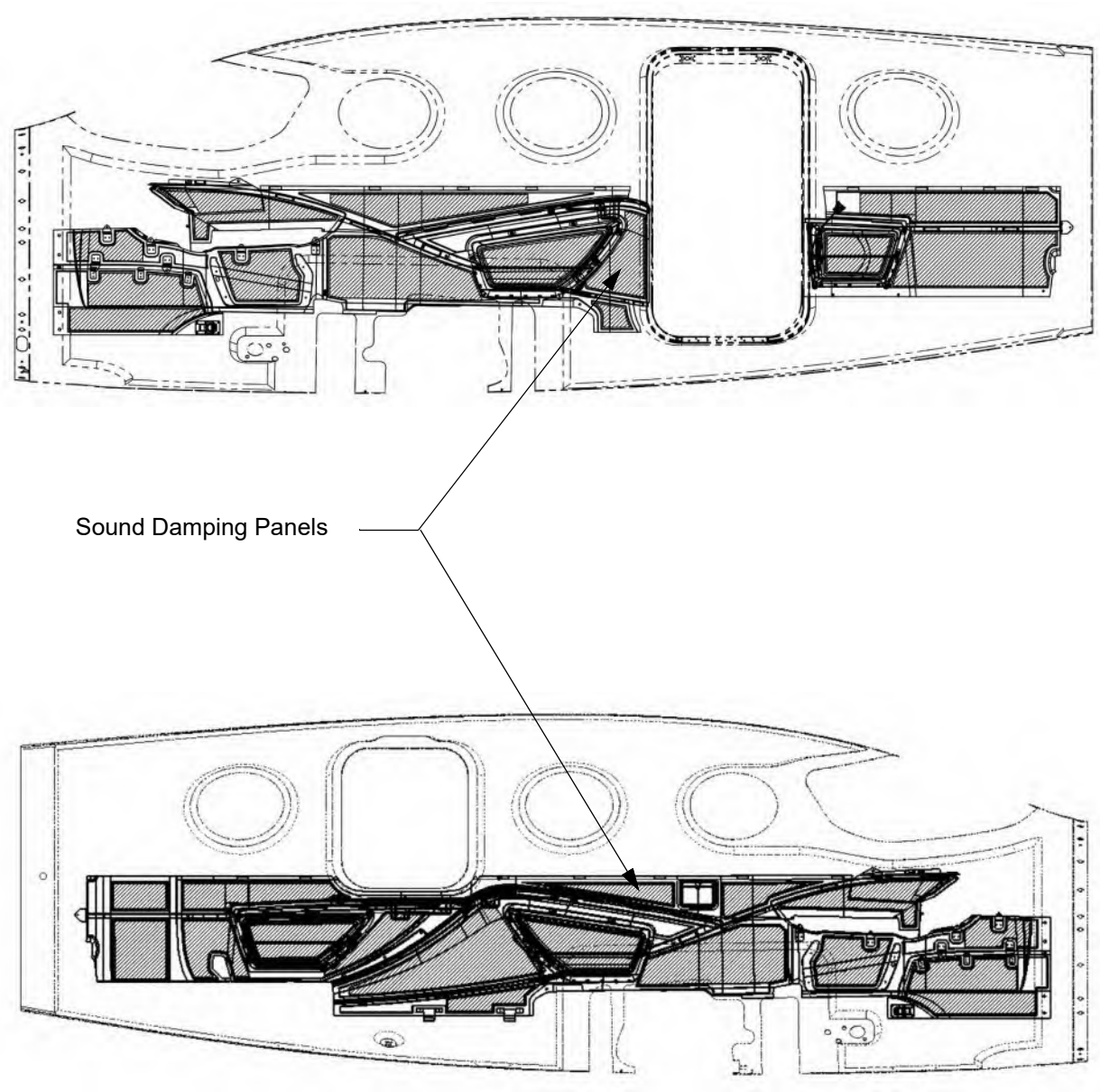

Note: Views looking at the outboard side of the panels.

Figure 25-80.3: Sound Damper on the Interior Finish Panels (Sheet 2 of 3)

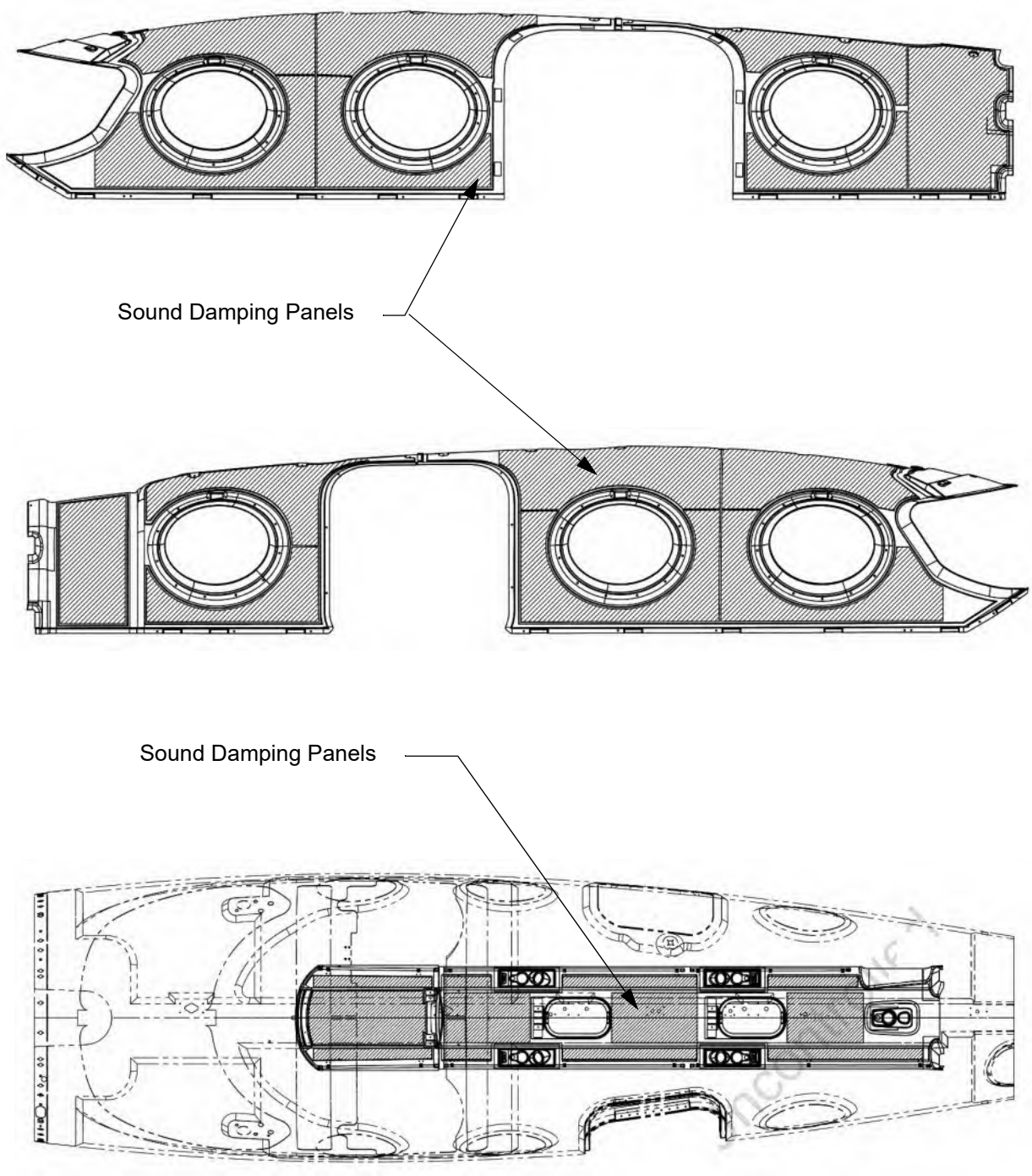

Note: Views looking at the outboard side of the panels.

Figure 25-80.3: Sound Damper on the Interior Finish Panels (Sheet 3 of 3)

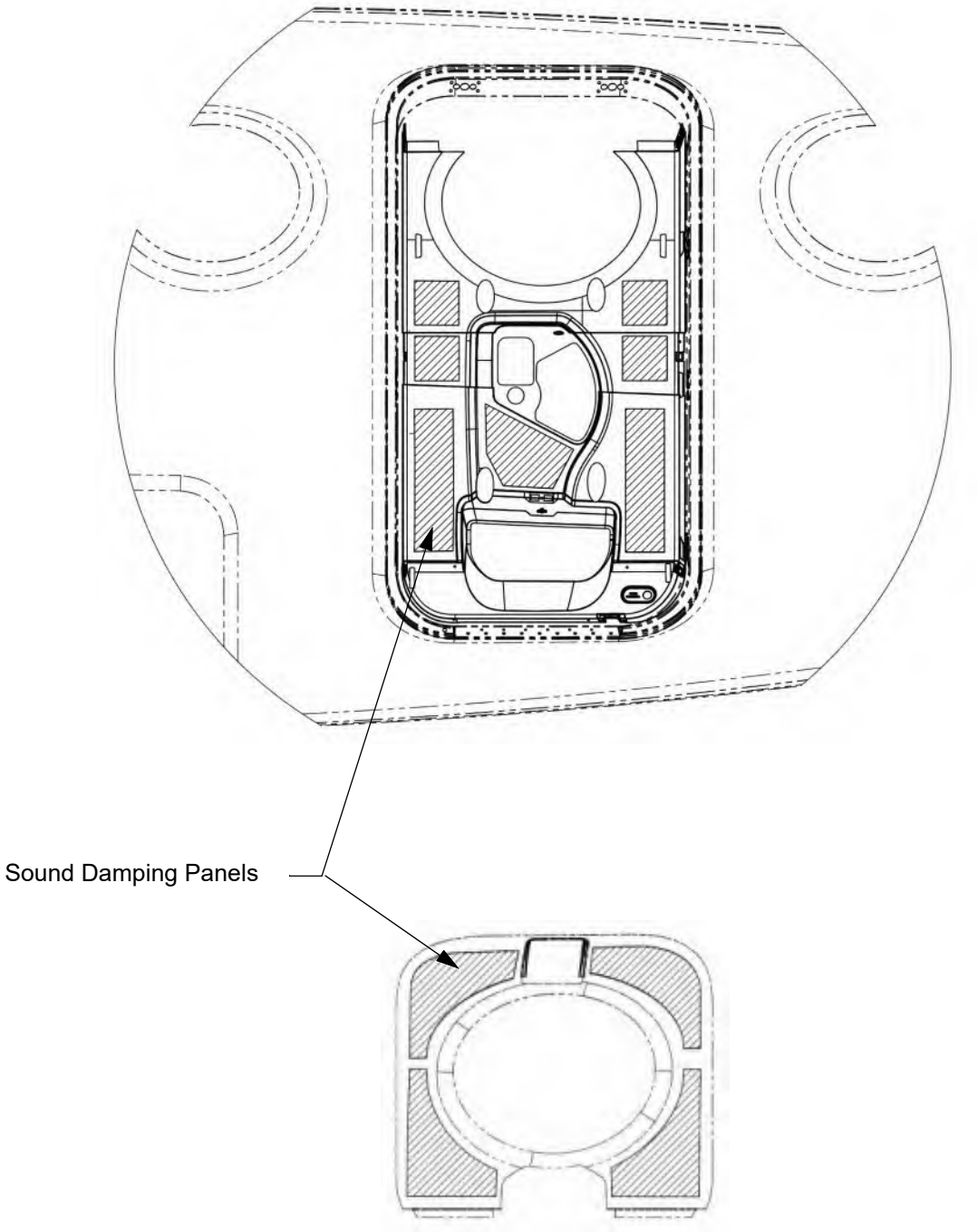

Note: Views looking at the outboard side of the panels.

D. Sound Damper on the Cargo Compartment Floor

(1) Removal

(a) Remove the cargo compartment floor. Refer to Chapter 25-50.

(b) Remove the damper material.

WARNING: Do not use metallic scrapers that could damage the finish panel during adhesive removal. Plastic scrapers are recommended.

(2) Installation

(a) Cut the new damper material to the shape and size required.

Note: Use scissors or a sharp knife to cut the damper material. If a knife is used, always cut down through the aluminum side of the damper material, orienting the aluminum face up and visible when cutting.

Note: Avoid excessive bending, scratching, denting, or cutting of the damper material during handling and installation.

(b) Clean the bonding surface of the cargo compartment floor using a 50/50 solution of isopropyl alcohol and water. Let the cleaned area dry completely.

(c) Remove the release liner from the damper material then press the damper material into place. Apply firm pressure over the entire surface of the damper material. Use of a roller is recommended.

(d) Install the cargo compartment floor. Refer to Chapter 25-50.

Figure 25-80.4: Sound Damper on Cargo Compartment Floor

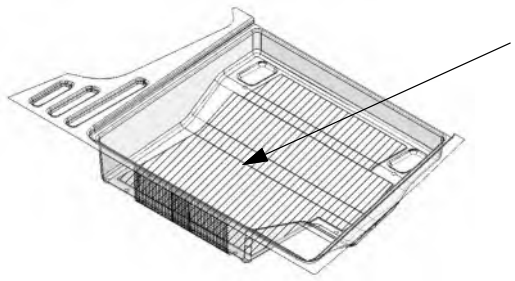

E. Sound Damper on the Mid Row Seat Rail Covers

(1) Removal

(a) Remove the mid row seats. Refer to Chapter 25-20.

(b) Remove the mid row seat rail covers.

(c) Remove the damper material.

WARNING: Do not use metallic scrapers that could damage the finish panel during adhesive removal. Plastic scrapers are recommended.

(2) Installation

(a) Cut the new damper material to the shape and size required.

Note: Use scissors or a sharp knife to cut the damper material. If a knife is used, always cut down through the aluminum side of the damper material, orienting the aluminum face up and visible when cutting.

Note: Avoid excessive bending, scratching, denting, or cutting of the damper material during handling and installation.

(b) Clean the bonding surface of the cargo compartment floor using a 50/50 solution of isopropyl alcohol and water. Let the cleaned area dry completely.

(c) Remove the release liner from the damper material then press the damper material into place. Apply firm pressure over the entire surface of the damper material. Use of a roller is recommended.

(d) Install the mid row seat rail covers.

(e) Install the mid row seats. Refer to Chapter 25-20.

Figure 25-80.5: Sound Damper on Seat Rail Covers

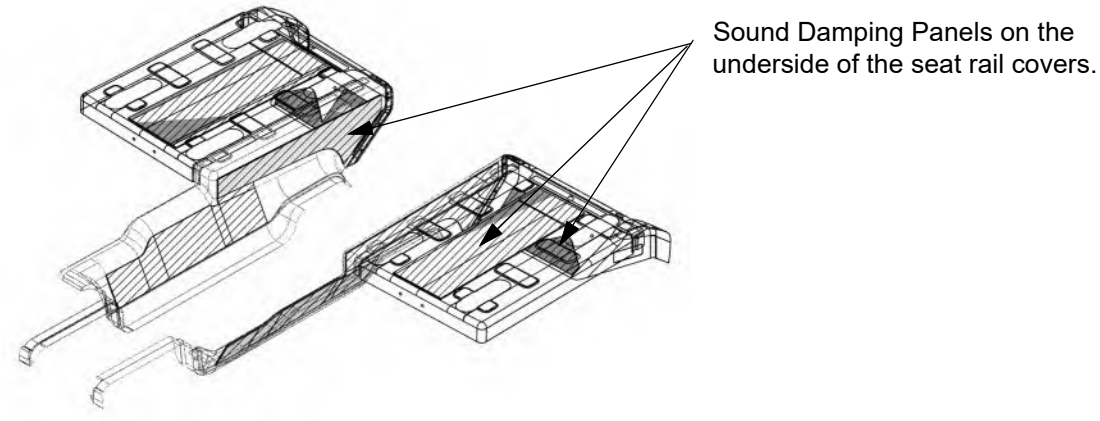

CHAPTER 26

Fire Protection

This Page Intentionally Left Blank

List of Effective Pages

Chapter/Section	Page Number	Effective Date
26-Title	Page 1	02 Jan 2020
26-Title	Page 2	02 Jan 2020
26-LOEP	Page 1	13 Apr 2020
26-LOEP	Page 2	02 Jan 2020
26-TOC	Page 1	02 Jan 2020
26-TOC	Page 2	02 Jan 2020
26-00	Page 1	13 Apr 2020
26-00	Page 2	02 Jan 2020
26-20	Page 1	02 Jan 2020
26-20	Page 2	02 Jan 2020
26-20	Page 3	02 Jan 2020
26-20	Page 4	02 Jan 2020

This Page Intentionally Left Blank

Table of Contents

List of Effective Pages ..... 26-LOEP / Page 1
Table of Contents ..... 26-TOC / Page1

Paragraph **Page Number**

Fire Protection
1. General ..... 26-00 / Page 1

Extinguishing
1. Description ..... 26-20 / Page 1
2. Maintenance Practices ..... 26-20 / Page 1
   A. Fire Extinguisher ..... 26-20 / Page 1

This Page Intentionally Left Blank

FIRE PROTECTION

1. General

Fire protection for this airplane is given by either a portable Halon 1211/1301 blend fire extinguisher or an environmentally acceptable Brx non-Halon fire extinguisher mounted in a compartment between the pilot and copilot seats.

This Page Intentionally Left Blank

EXTINGUISHING

1. Description

This airplane is equipped with either a 1211 Halon fire extinguisher or an environmentally acceptable Brx non-Halon fire extinguisher approved for use on class A (ordinary combustibles), B (flammable or combustible liquids), and C (electrical equipment) fires. The extinguisher is mounted with a quick release bracket within a compartment located between the pilot and copilot seats.

Note: The fire extinguisher must be serviced or replaced after each use.

2. Maintenance Practices

A. Fire Extinguisher

(1) Removal

(a) Open the storage compartment.

(b) Release the quick release clamp.

(c) Remove the fire extinguisher from the attachment bracket.

(2) Installation

(a) Insert the fire extinguisher into the attachment bracket.

(b) Attach the extinguisher to the bracket using the quick release clamp.

(c) Close the storage compartment.

(3) Monthly Inspection

(a) Examine the fire extinguisher for signs of damage, corrosion, or leakage.

(b) Ensure the extinguisher nozzle is unobstructed, the safety seal is intact, the gauge pressure is in the operable (green) range, the lockpin and tamper seal are in place, and the operating instructions are clearly visible.

(c) Corrective action must be taken if any of the above conditions are not satisfied.

(4) Maintenance

Refer to the current revision of NFPA-10 for additional inspection requirements.

(a) Annual

Do a thorough examination of the extinguisher, covering mechanical parts, extinguishing agent, and expelling means. Ensure the inspected and maintained fire extinguisher is tagged to verify performance of the annual maintenance.

(b) 6-Year Maintenance

Every six years commencing from the date of manufacture have the fire extinguisher emptied, inspected, subjected to applicable maintenance procedures, and refilled by a qualified professional fire extinguisher maintenance and repair facility. When these maintenance procedures are done during periodic recharging or hydrostatic testing, the next 6-year maintenance will be required six years from that date.

(c) 12-Year Hydrostatic Test.

Every twelve years from the date of manufacture of the fire extinguisher the cylinder must be hydrostatically tested to confirm integrity of the cylinder. 12-year testing is done concurrently with the 6 year maintenance.

Figure 26-20.1: Fire Extinguisher

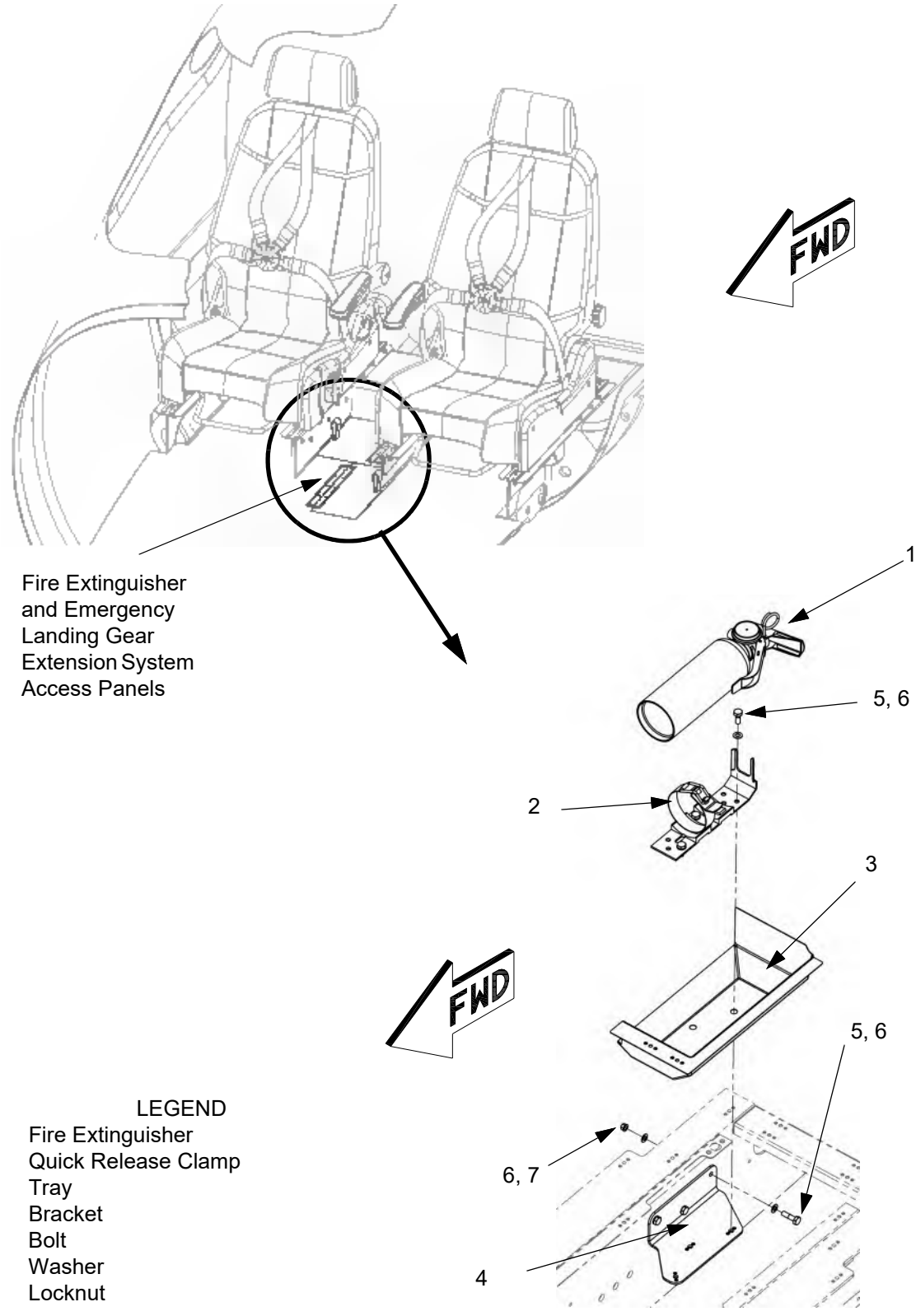

LEGEND

1. Fire Extinguisher
2. Quick Release Clamp
3. Tray
4. Bracket
5. Bolt
6. Washer
7. Locknut

This Page Intentionally Left Blank

CHAPTER
27

Flight Controls

This Page Intentionally Left Blank

List of Effective Pages

Chapter/Section	Page Number	Effective Date
27-Title	Page 1	02 Jan 2020
27-Title	Page 2	02 Jan 2020
27-LOEP	Page 1	08 Sep 2026
27-LOEP	Page 2	08 Sep 2026
27-LOEP	Page 3	08 Sep 2026
27-LOEP	Page 4	08 Sep 2026
27-TOC	Page 1	02 Jan 2020
27-TOC	Page 2	08 Sep 2026
27-00	Page 1	13 Apr 2020
27-00	Page 2	02 Jan 2020
27-00	Page 3	11 Nov 2020
27-00	Page 4	02 Jan 2020
27-00	Page 5	02 Jan 2020
27-00	Page 6	02 Jan 2020
27-00	Page 7	02 Jan 2020
27-00	Page 8	02 Jan 2020
27-00	Page 9	02 Jan 2020
27-00	Page 10	02 Jan 2020
27-00	Page 11	02 Jan 2020
27-00	Page 12	02 Jan 2020
27-00	Page 13	02 Jan 2020
27-00	Page 14	16 May 2022
27-00	Page 15	16 May 2022
27-00	Page 16	16 May 2022
27-10	Page 1	08 Sep 2026
27-10	Page 2	08 Sep 2026
27-10	Page 3	08 Sep 2026
27-10	Page 4	08 Sep 2026
27-10	Page 5	08 Sep 2026
27-10	Page 6	08 Sep 2026
27-10	Page 7	08 Sep 2026
27-10	Page 8	08 Sep 2026
27-10	Page 9	08 Sep 2026
27-10	Page 10	08 Sep 2026
27-10	Page 11	08 Sep 2026
27-10	Page 12	08 Sep 2026
27-10	Page 13	08 Sep 2026
27-10	Page 14	08 Sep 2026
27-10	Page 15	08 Sep 2026
27-10	Page 16	08 Sep 2026

27-10 ..... Page 17 .....08 Sep 2026
27-10 ..... Page 18 .....08 Sep 2026
27-10 ..... Page 19 .....08 Sep 2026
27-10 ..... Page 20 .....08 Sep 2026
27-10 ..... Page 21 .....08 Sep 2026
27-10 ..... Page 22 .....08 Sep 2026
27-10 ..... Page 23 .....08 Sep 2026
27-10 ..... Page 24 .....08 Sep 2026
27-10 ..... Page 25 .....08 Sep 2026
27-10 ..... Page 26 .....08 Sep 2026

27-20 ..... Page 1 .....08 Sep 2026
27-20 ..... Page 2 .....08 Sep 2026
27-20 ..... Page 3 .....08 Sep 2026
27-20 ..... Page 4 .....08 Sep 2026
27-20 ..... Page 5 .....08 Sep 2026
27-20 ..... Page 6 .....08 Sep 2026
27-20 ..... Page 7 .....08 Sep 2026
27-20 ..... Page 8 .....08 Sep 2026
27-20 ..... Page 9 .....08 Sep 2026
27-20 ..... Page 10 .....08 Sep 2026
27-20 ..... Page 11 .....08 Sep 2026
27-20 ..... Page 12 .....08 Sep 2026
27-20 ..... Page 13 .....08 Sep 2026
27-20 ..... Page 14 .....08 Sep 2026
27-20 ..... Page 15 .....08 Sep 2026
27-20 ..... Page 16 .....08 Sep 2026
27-20 ..... Page 17 .....08 Sep 2026
27-20 ..... Page 18 .....08 Sep 2026
27-20 ..... Page 19 .....08 Sep 2026
27-20 ..... Page 20 .....08 Sep 2026
27-20 ..... Page 21 .....08 Sep 2026
27-20 ..... Page 22 .....08 Sep 2026
27-20 ..... Page 23 .....08 Sep 2026
27-20 ..... Page 24 .....08 Sep 2026
27-20 ..... Page 25 .....08 Sep 2026
27-20 ..... Page 26 .....08 Sep 2026
27-20 ..... Page 27 .....08 Sep 2026
27-20 ..... Page 28 .....08 Sep 2026
27-20 ..... Page 29 .....08 Sep 2026
27-20 ..... Page 30 .....08 Sep 2026
27-20 ..... Page 31 .....08 Sep 2026
27-20 ..... Page 32 .....08 Sep 2026
27-20 ..... Page 33 .....08 Sep 2026
27-20 ..... Page 34 .....08 Sep 2026
27-20 ..... Page 35 .....08 Sep 2026
27-20 ..... Page 36 .....08 Sep 2026

27-30 ..... Page 1 .....08 Sep 2026
27-30 ..... Page 2 .....08 Sep 2026
27-30 ..... Page 3 .....08 Sep 2026
27-30 ..... Page 4 .....08 Sep 2026
27-30 ..... Page 5 .....08 Sep 2026
27-30 ..... Page 6 .....08 Sep 2026
27-30 ..... Page 7 .....08 Sep 2026
27-30 ..... Page 8 .....08 Sep 2026
27-30 ..... Page 9 .....08 Sep 2026
27-30 ..... Page 10 .....08 Sep 2026
27-30 ..... Page 11 .....08 Sep 2026
27-30 ..... Page 12 .....08 Sep 2026
27-30 ..... Page 13 .....08 Sep 2026
27-30 ..... Page 14 .....08 Sep 2026
27-30 ..... Page 15 .....08 Sep 2026
27-30 ..... Page 16 .....08 Sep 2026
27-30 ..... Page 17 .....08 Sep 2026
27-30 ..... Page 18 .....08 Sep 2026
27-30 ..... Page 19 .....08 Sep 2026
27-30 ..... Page 20 .....08 Sep 2026
27-30 ..... Page 21 .....08 Sep 2026
27-30 ..... Page 22 .....08 Sep 2026

27-50 ..... Page 1 .....11 Nov 2020
27-50 ..... Page 2 ..... 16 May 2022
27-50 ..... Page 3 ..... 10 Jul 2025
27-50 ..... Page 4 ..... 19 Jan 2023
27-50 ..... Page 5 ..... 16 May 2022
27-50 ..... Page 6 ..... 16 May 2022
27-50 ..... Page 7 ..... 16 May 2022
27-50 ..... Page 8 ..... 16 May 2022
27-50 ..... Page 9 ..... 16 May 2022
27-50 ..... Page 10 ..... 16 May 2022
27-50 ..... Page 11 ..... 16 May 2022
27-50 ..... Page 12 ..... 16 May 2022
27-50 ..... Page 13 ..... 16 May 2022
27-50 ..... Page 14 ..... 16 May 2022
27-50 ..... Page 15 .....08 Sep 2026
27-50 ..... Page 16 .....08 Sep 2026
27-50 ..... Page 17 .....08 Sep 2026
27-50 ..... Page 18 .....08 Sep 2026
27-50 ..... Page 19 .....08 Sep 2026
27-50 ..... Page 20 .....08 Sep 2026
27-50 ..... Page 21 .....08 Sep 2026
27-50 ..... Page 22 .....08 Sep 2026
27-50 ..... Page 23 .....08 Sep 2026

27-50 ..... Page 24 .....08 Sep 2026
27-50 ..... Page 25 .....08 Sep 2026
27-50 ..... Page 26 .....08 Sep 2026
27-50 ..... Page 27 .....08 Sep 2026
27-50 ..... Page 28 .....08 Sep 2026

Table of Contents

List of Effective Pages ..... 27-LOEP / Page 1
Table of Contents ..... 27-TOC / Page1

Paragraph **Page Number**

Flight Controls

1. General ..... 27-00 / Page 1
2. Maintenance Practices ..... 27-00 / Page 2
   - A. Control Surface Clearance ..... 27-00 / Page 2
   - B. Cable Tension ..... 27-00 / Page 5
   - C. Turnbuckles ..... 27-00 / Page 9
   - D. Cable Tubes ..... 27-00 / Page 9
   - E. Seal Blocks ..... 27-00 / Page 10
   - F. Drain Holes ..... 27-00 / Page 14

Aileron and Tab

1. Description ..... 27-10 / Page 1
2. Maintenance Practices ..... 27-10 / Page 1
   - A. Aileron Neutral Position ..... 27-10 / Page 1
   - C. Aileron Cables ..... 27-10 / Page 3
   - D. Aileron System Pulleys ..... 27-10 / Page 7
   - E. Wing Tip Sector ..... 27-10 / Page 14
   - F. Trim Tab ..... 27-10 / Page 16
   - G. Trim Tab Actuator ..... 27-10 / Page 17
   - H. Right Aileron Drain Hole ..... 27-10 / Page 20
   - I. Aileron Rigging and Adjustment ..... 27-10 / Page 20
   - J. Yoke Rigging Adjustment ..... 27-10 / Page 25
   - K. Inspection ..... 27-10 / Page 25

Rudder and Tab

1. Description ..... 27-20 / Page 1
2. Maintenance Practices ..... 27-20 / Page 1
   - A. Rudder Neutral Position ..... 27-20 / Page 1
   - B. Rudder Trim Tab Neutral Position ..... 27-20 / Page 1
   - C. Rudder Cables ..... 27-20 / Page 2
   - D. Rudder Pulleys System ..... 27-20 / Page 5
   - E. Rudder Pedals ..... 27-20 / Page 11
   - F. Rudder Bellcrank ..... 27-20 / Page 15
   - G. Rudder Limiter ..... 27-20 / Page 15
   - H. Torque Tubes ..... 27-20 / Page 20
   - I. Trim Tab ..... 27-20 / Page 23
   - J. Trim Tab Actuator ..... 27-20 / Page 25
   - K. Rudder Rigging and Adjustment ..... 27-20 / Page 28
   - L. Neutral Rudder Position Adjustment ..... 27-20 / Page 32

M. Rudder Trim Adjustment ..... 27-20 / Page 33
N. Inspection ..... 27-20 / Page 34

Elevator and Tab

1. Description ..... 27-30 / Page 1
2. Maintenance Practices ..... 27-30 / Page 1
A. Elevator Neutral Position ..... 27-30 / Page 1
B. Elevator Trim Tab Neutral Position ..... 27-30 / Page 2
C. Elevator Cables ..... 27-30 / Page 2
D. Elevator Pulleys ..... 27-30 / Page 5
E. Yoke ..... 27-30 / Page 12
F. Trim Tab ..... 27-30 / Page 13
G. Trim Tab Actuator ..... 27-30 / Page 15
H. Elevator Neutral Adjustment ..... 27-30 / Page 18
I. Elevator Travel Adjustment ..... 27-30 / Page 19
J. Elevator Trim Tab Adjustment ..... 27-30 / Page 21
K. Inspection ..... 27-30 / Page 22

Flaps

1. Description ..... 27-50 / Page 1
2. Maintenance Practices ..... 27-50 / Page 1
A. Flaps Neutral Position ..... 27-50 / Page 1
B. Flaps Actuator ..... 27-50 / Page 1
D. Flaps Torque Tube ..... 27-50 / Page 2
E. Flaps Actuator Microswitch ..... 27-50 / Page 3
F. Flaps Position Potentiometer (SN: K003 - K010) ..... 27-50 / Page 4
G. Flap Controls ..... 27-50 / Page 15
H. Flap Rigging ..... 27-50 / Page 18
I. Inspection ..... 27-50 / Page 25
J. Flap Secondary Full Limit Switch Check (SN: K033 and On and K003 - K032 with SB-0034 Only) ..... 27-50 / Page 26
K. Flap Operational Check ..... 27-50 / Page 27

FLIGHT CONTROLS

1. General

Flight path control of the airplane is done by two aileron surfaces, two elevator surfaces and one rudder surface. Pilot and Copilot control inputs are made at their respective control yokes or rudder pedals and are mechanically transmitted to each surface. Secondary trim control is made through electrically actuated trim tabs on the rudder, left side elevator, and left side aileron. The rudder pedals also have brake master cylinders which are part of the airplane braking system.

LEGEND

1. Rudder Pedals
2. Aileron System Cables
3. Aileron System Bellcrank
4. Elevator System Cables
5. Rudder System Cables
6. Flaps System

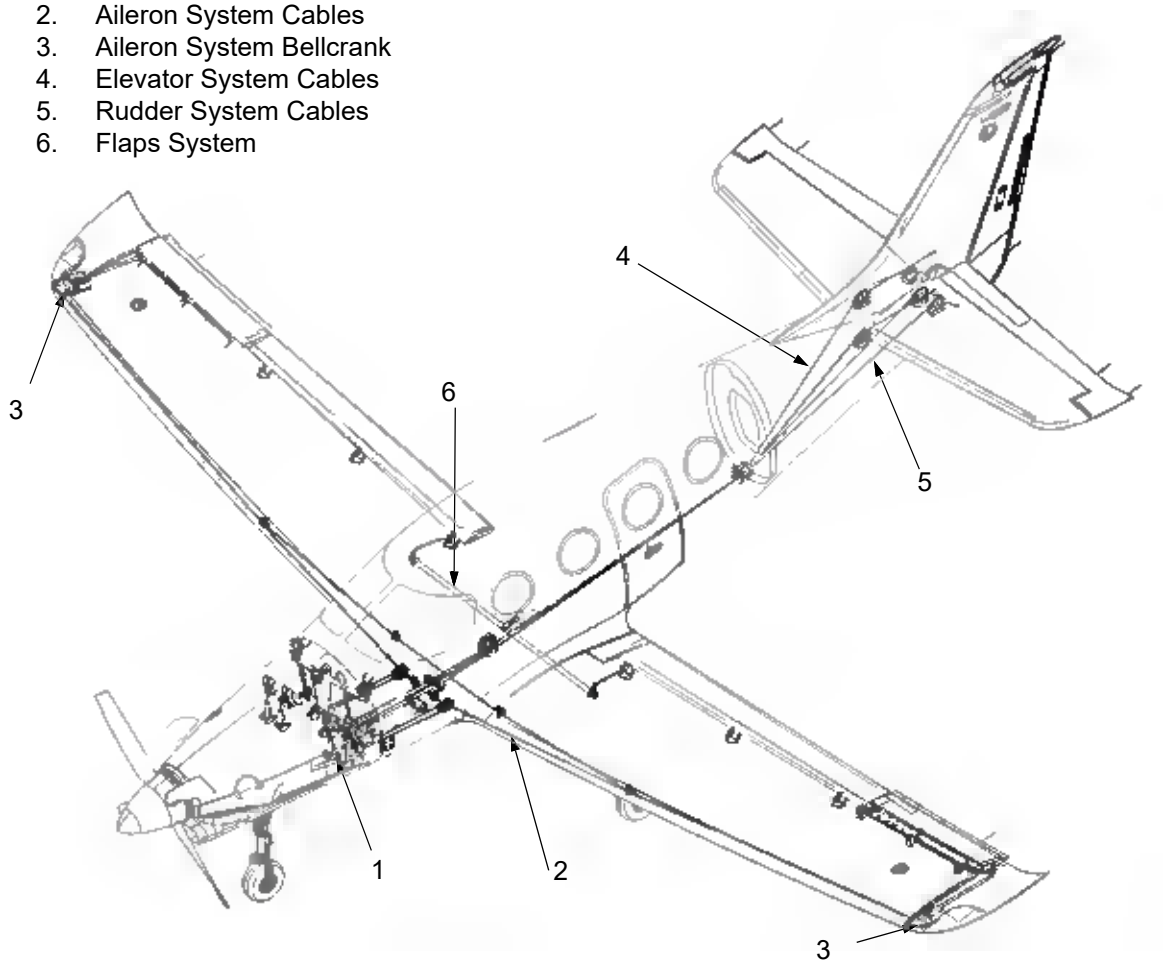

Table 27-00.1: Special Tools

Item	Part Number	Supplier
Smart Level or Inclinometer	-	Any
Cable Tensiometer	-	Any
Turnbuckle Wrench	-	Any
Turnbuckle Clips	-	Any
Pull Line (string or cord)	-	Any

2. Maintenance Practices

A. Control Surface Clearance

(1) Span End Clearance

For all movable control surfaces a minimum clearance of 3/16” must be maintained at either span end of the control surface and any adjacent component that poses a jamming hazard. This clearance must be maintained at neutral position and throughout for the entire range of control surface travel.

(a) Allowable Deviations for the Rudder

The Rudder span end gap between the bottom surface of the rudder counterweight and the top horizontal edge of the vertical fin surface requires a larger minimum clearance than the standard span end clearance. The rudder span end clearance must be a minimum of 0.22 inch.

(b) Allowable Deviations for the Trim Tabs

Span end gap minimum clearance for each trim tab may be smaller than the 3/16” general requirement. The minimum span end clearance for each trim tab must be a minimum of 0.090”.

(2) Wiping Gap Clearance

A minimum 0.050” wiping gap clearance (refer to the following figure) shall be maintained along the span wise length between any moving control surface and the trailing edge of the adjacent fixed surface. The wiping gap clearance must be maintained both at neutral position and throughout the entire range of motion. Allowable deviations from this requirement are as follows:

(a) Elevator

Elevator surface wiping gap clearances require a larger minimum clearance than the standard minimum wiping clearance. The elevator surface wiping gap clearance on both the top and bottom, outboard 4” span section must be a minimum 0.060”. A minimum of 0.080” must be maintained at all other places along the span wise length of the surface. Tolerance is +0.040” / -0”.

(b) Aileron

Aileron surface wiping gap clearance on both the top and bottom must not be less than 0.050” or exceed 0.130”.

(c) Rudder

Rudder surface wiping gap clearances require specific minimum and maximum clearances to meet safety and airplane performance requirements.

Minimum Rudder surface wiping gap clearance on both left and right sides shall not be less than 0.22”.

Maximum Rudder surface wiping gap clearance on the bottom of the rudder between the joggle and a 4-inch distance along the exterior surface of the rudder for both the left and right sides shall not exceed 0.495”. The gap measurement around the vertical joggle at the bottom of the vertical closeout may be ranged between 0.22 to 1.05 inches. The transition between the gap clearance variance must be smooth.

Maximum Rudder surface wiping gap clearance between the 4” joggle distance and the lower hinge hole location on both left and right sides shall not exceed 0.30”.

Maximum Rudder surface wiping gap clearance along the rudder surface between the lower hinge hole location and the middle hinge hole location on both the left and right sides shall not exceed 0.32”.

Maximum Rudder surface wiping gap clearance along the rudder surface between the middle hinge hole location and the counterweight span gap location on both the left and right sides shall not exceed 0.48”.

Maximum Rudder surface wiping gap clearance across the counterweight line location span shall not exceed 0.60”.

Maximum Rudder surface gap clearance forward of the counterweight location shall not exceed 0.78”

(d) Flaps

With flaps set to the up position and no preload applied, there shall be no contact between the trailing edge of the wing skin and the flap surface. The flap may make contact with the wing skin when a preload is applied.

The gap between the upper wing skin trailing edge and the flaps turning vane leading edge with full flaps shall be as shown below.

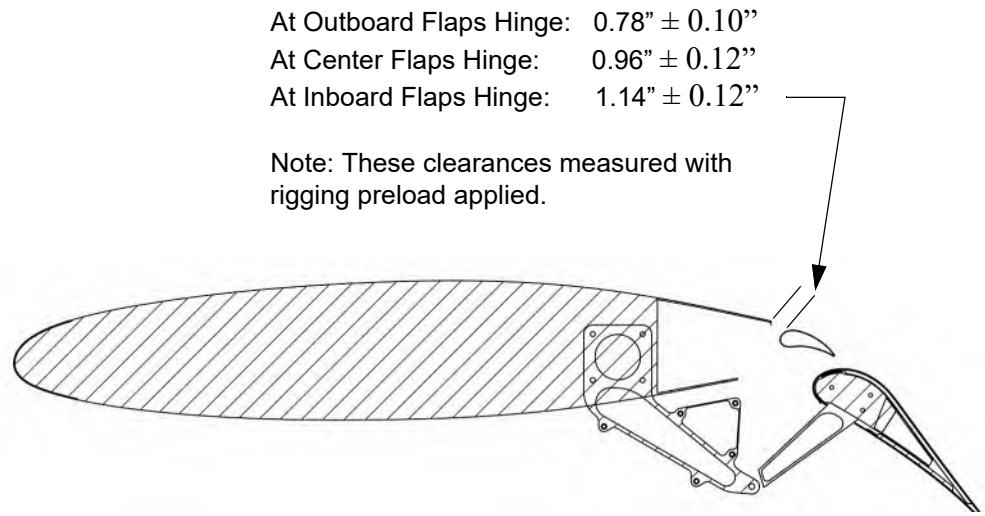

The wiping gap clearance refers only to the trailing edge of the wing, vertical, horizontal stabilizer skins, or the interface area of the leading edge of the trim tabs. The control surfaces and trim tab must have a curved leading edge where they interface.

The trailing edge of lifting surface skins and the interface area of the leading edge of the trim tabs may be final fit by tapering the thickness of the skin on the uncontrolled surface. Minimum edge thickness is 3 plies. An acceptable means of accomplishing this fit is affixing adhesive backed abrasive to a control surface and abrading the skin interface, once an appropriate gap is achieved, skin trailing edge is to be blunted by abrading until a trailing edge thickness of at least 0.030” is achieved. Paint touch up for any trimmed surface is required.

(3) System Separation Requirements

For any rigid portion of the flight control or steering system whose movement could be inhibited by adjacent structure or components, 3/16 clearance must be maintained throughout the component’s entire range of motion unless otherwise indicated. Deviations are as follows:

Flap fork minimum clearance with the forward wing spar may deviate from the 3/16” requirement but must not fall below 0.050” clearance between the flap horn and spar.

Flap Fork minimum clearance with the upper wing skin must not fall below 0.050” throughout the range of travel.

The minimum clearance between the flap push rod and the aft wing spar passthrough hole may deviate from the 3/16” requirements but must not fall below 0.050” clearance when the flaps are fully extended.

Regions where the control surfaces approach a fixed structure at a near normal vector and at a rate equal to the approach rate to the control surface stop, a minimum clearance of 0.01" is permissible, evaluated with the control surface held against the controls surface stop.

Figure 27-00.1: Control surface Clearance

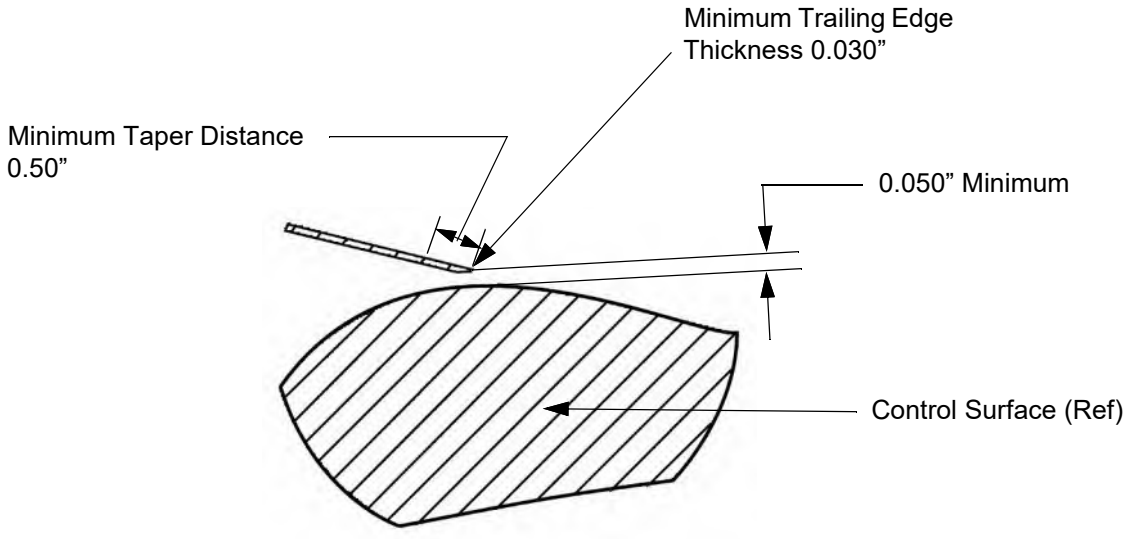

B. Cable Tension

Cable tension for the aileron, elevator, and rudder control cables must be 24 to 28 lbs (10.89 to 12.70 kg) as shown in the following figures. The cables and the airplane must be in a stable temperature environment for a minimum of 3 hours prior to rigging or tension adjustment. Control cable tensions must be measured with the system set to neutral positions.

After aileron cables are rigged, the forward aileron autopilot bridle cable clamp must have a 0.25" minimum clearance to the forward aileron pulley with the control yoke at the full range of travel.

Note: Proper cable tension is achieved when the tension value is reached and the rigging pins turn freely in the rigging holes, with no binding. Binding on the rigging pins indicates unbalanced tension in the cables associated with the pin.

Figure 27-00.2: Aileron Cable Tension

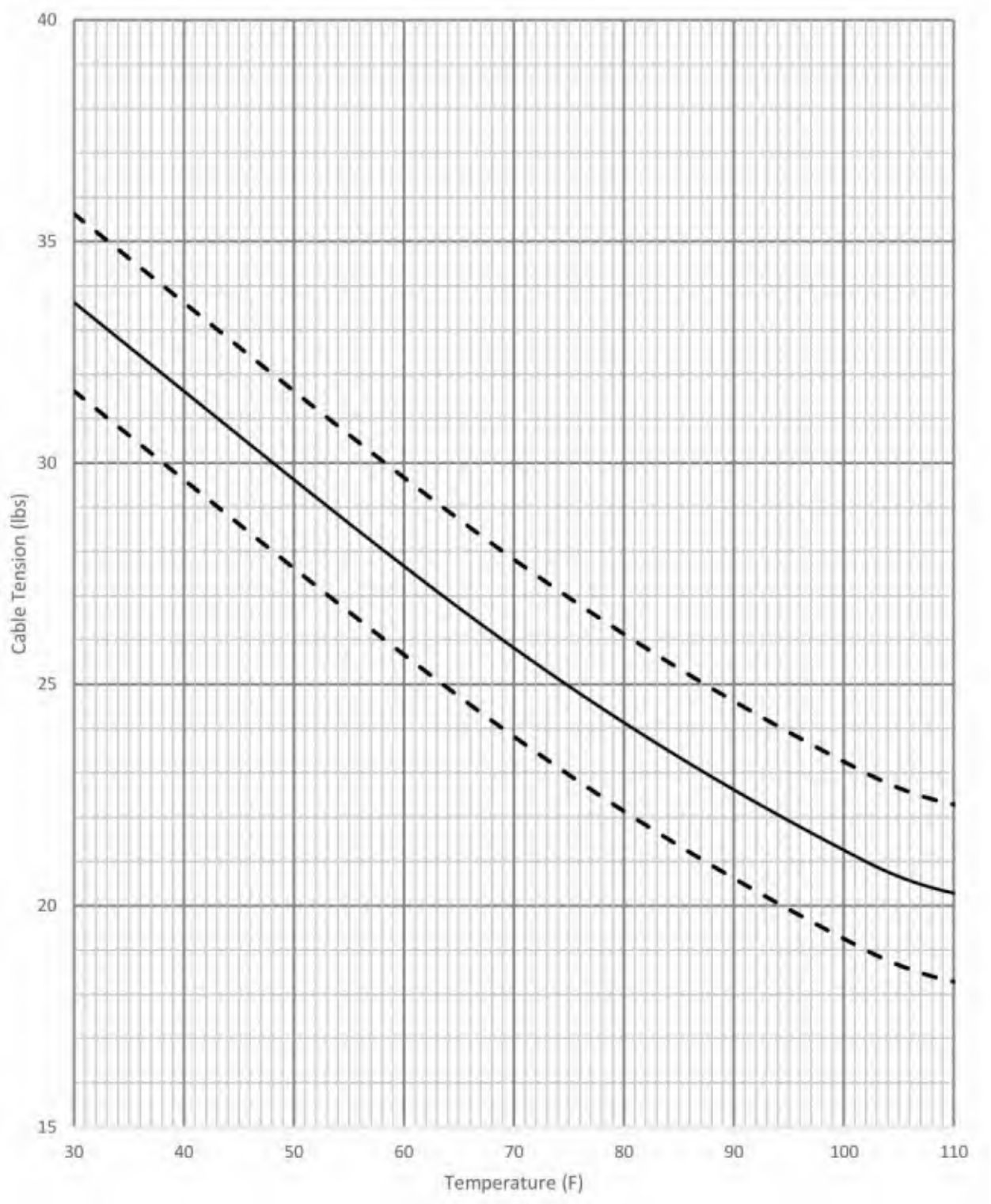

Figure 27-00.3: Elevator Cable Tension

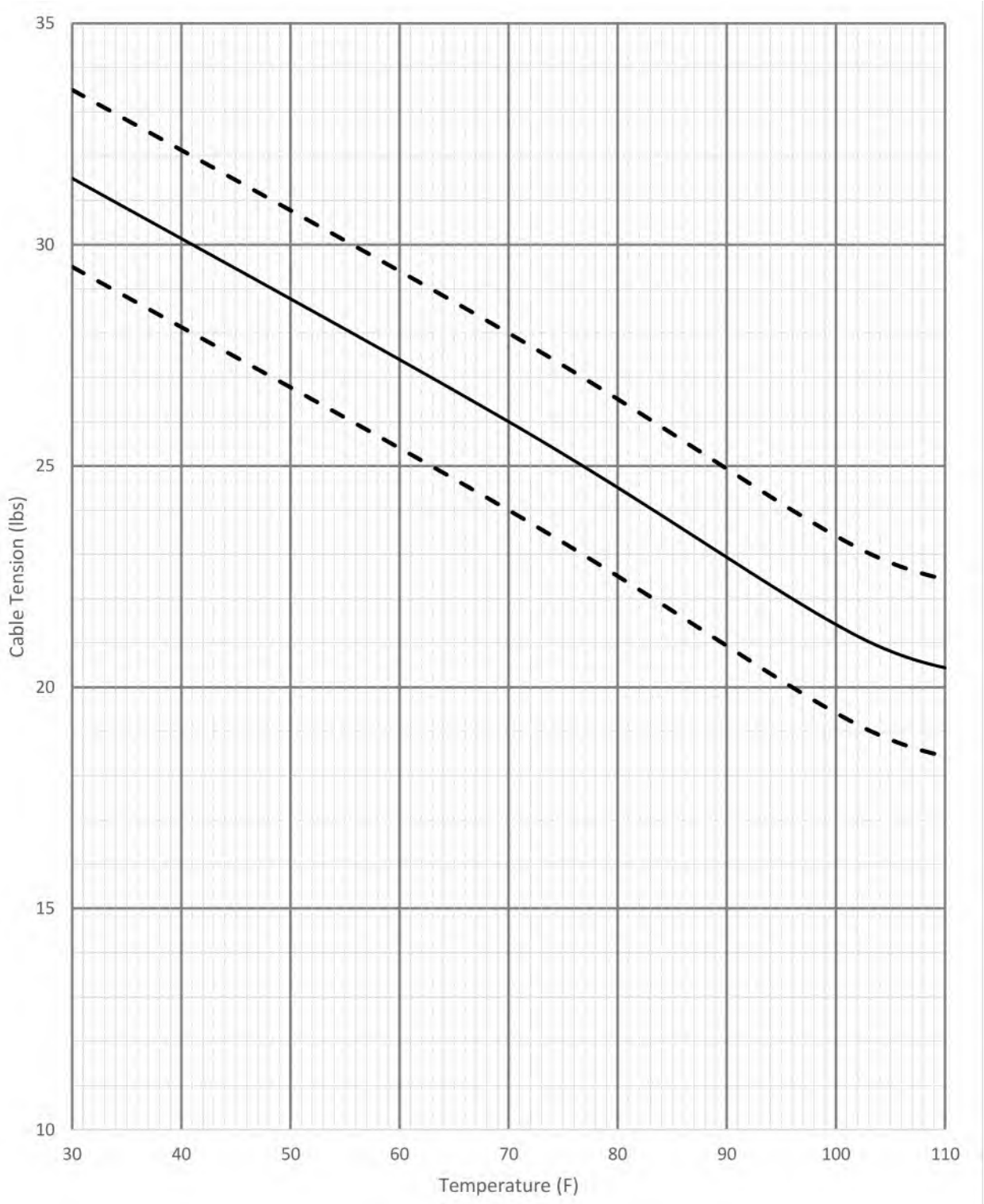

Figure 27-00.4: Rudder Cable Tension

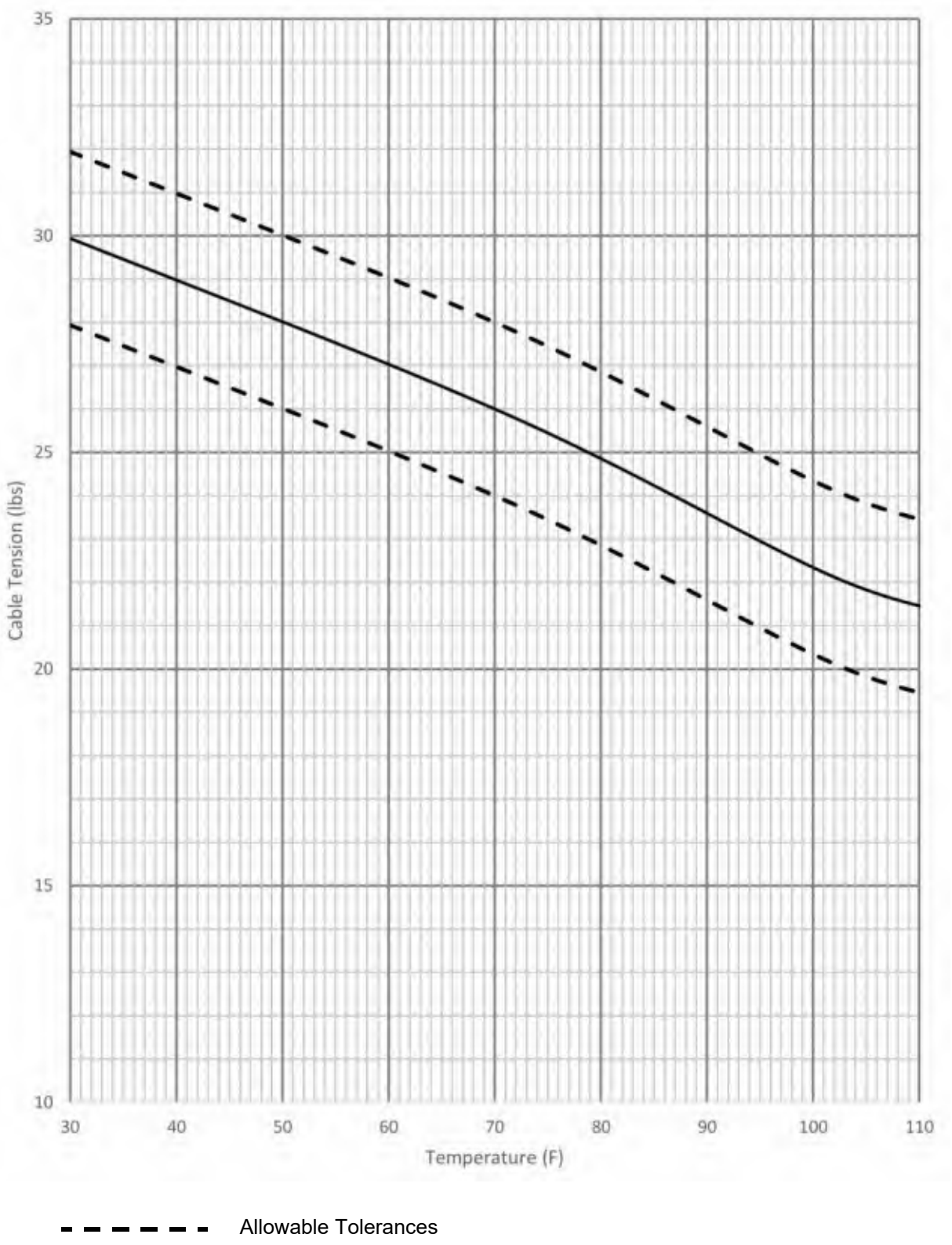

C. Turnbuckles

Turnbuckles are used to tension all the control cables. Turnbuckles have an installation tolerance equal to 7 threads for each terminal end. Both threaded terminals must be screwed into the turnbuckle barrel equal amounts. At proper cable tension, a turnbuckle should have no more than 3 exposed threads on either terminal end. For a new installation, the threaded portion of the terminal shank must not be buried more than 4 threads below the turnbuckle barrel end in order to allow proper adjustment of the cable system.

Figure 27-00.5: Turnbuckle Tolerance

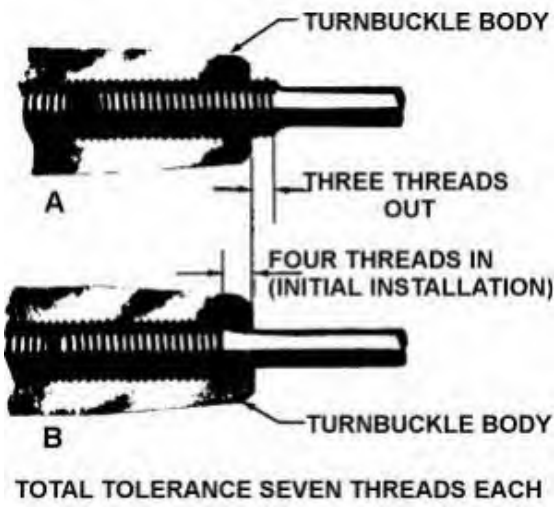

Once tension is set, safety the turnbuckles using locking clips or safety wire (refer to Chapter 20-50).

Note: If turnbuckles must be adjusted to insert the safety clip, ensure cable tension is still within tolerance.

D. Cable Tubes

The elevator and rudder cables run through cable tubes where they pass under the floor panels of the pressurized cabin between the aft pressure bulkhead and the wing saddle. The ends of these tubes open into unpressurized areas of the fuselage requiring that the tubes and their installation be leak free.

(1) Removal

(a) Remove the aft passenger seats (refer to Chapter 25-20).

(b) Remove the passenger cabin carpet (refer to Chapter 25-20) and flooring (refer to Chapter 53-20).

(c) Remove the flight control cabling of the cable tube to be removed.

(d) Remove the RTV 100 sealant securing the tube in place then remove the tube.

(e) Remove excess RTV 100 sealant from the rib penetrations and the seal blocks.

(2) Installation

(a) Slide one piece of the cable tube assembly into position through the rib penetrations.

(b) Slide the second piece of the cable tube assembly into position through the rib penetrations.

(c) Join the two pieces together using a tube coupler. Bond the tube into the coupler using RTV 100 sealant.

Note: Ensure no RTV 100 sealant is inside the tubes. Minor sanding of the exterior of the end of the tube is permitted to fit the tubes into the coupler.

(d) Use RTV 100 sealant to fill any gaps where the tubes penetrate the floor ribs and at the seal blocks at each end of the cable tube assembly.

Note: The cable tube assembly must be airtight.

(e) Install the aft cabin flooring (refer to Chapter 53-20) and carpet (refer to Chapter 25-20).

(f) Install the aft passenger seats (refer to Chapter 25-20).

E. Seal Blocks

(1) Removal

(a) Remove the elevator and rudder cables. Refer to Chapter 27-30 and 27-20.

(b) Remove the RTV 100 sealant securing the tubes in place.

(c) Slide the cable tubes out of the seal block to be removed.

(d) Remove the bolts and washers securing the seal block assembly to the fuselage.

(e) Remove the seal block assembly from the airplane.

Note: Note the orientation of the seal block for re-installation or installation of new.

(2) Installation

(a) Orient the seal block against the fuselage.

Note: The seal block is asymmetrical and the penetrations are slanted. It only mates correctly with the cable tubes in one orientation.

(b) Position the backing plate against the face of the seal block then loosely attach it using bolts and washers.

(c) Slide the cable tubes into the seal block.

(d) Coat the shank of the bolts using AC 350 B-1/2 then attach the seal block assembly to the fuselage.

Note: Do not get AC 350 B-1/2 on the bolt threads.

(e) Attach the cable tubes through all penetrations using RTV 100 sealant.

(f) Let the AC 350 B-1/2 and RTV 100 sealant fully cure (refer to the manufacturer's instructions).

(g) Install the elevator and rudder cables. Refer to Chapter 27-30 and 27-20.

Figure 27-00.6: Flight Control Cable Tubes (Sheet 1 of 2)

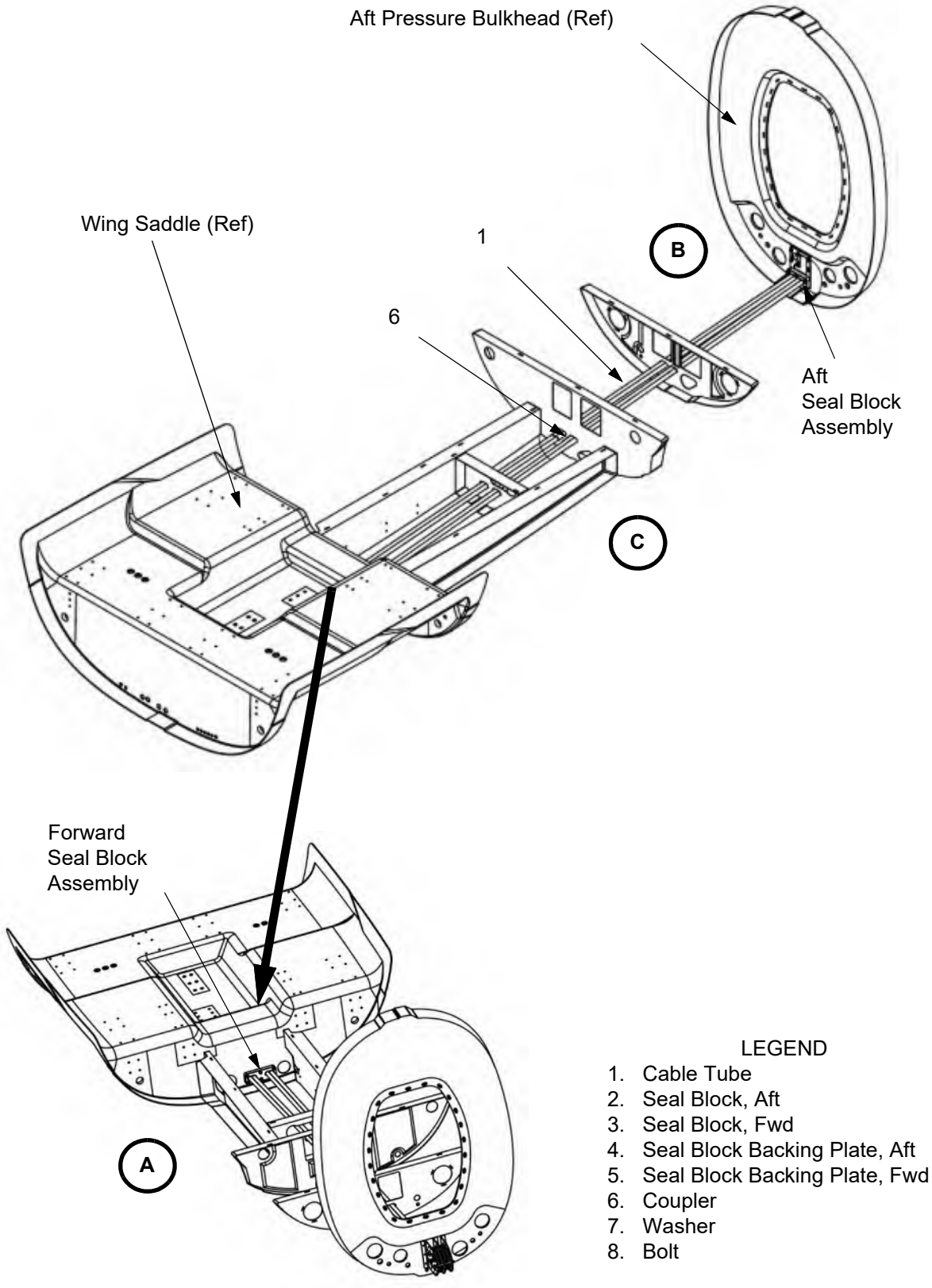

Figure 27-00.6: Flight Control Cable Tubes (Sheet 2 of 2)

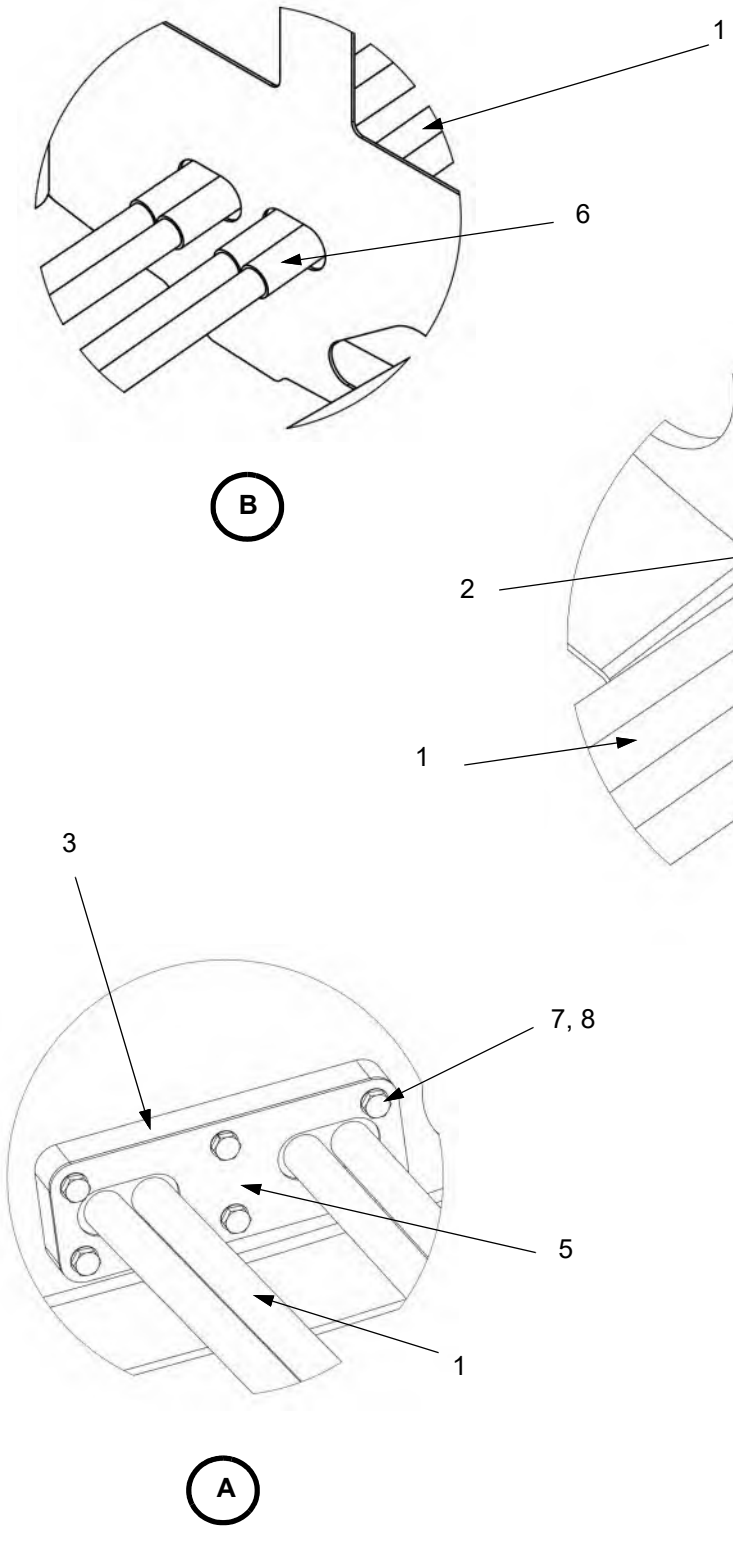

LEGEND

1. Cable Tube
2. Seal Block, Aft
3. Seal Block, Fwd
4. Seal Block Backing Plate, Aft
5. Seal Block Backing Plate, Fwd
6. Coupler
7. Washer
8. Bolt

F. Drain Holes

(1) There are drain holes in the right aileron, left and right flaps, left and right elevators, elevator trim tab, rudder, and rudder trim tab. All drain holes must be open and free of obstructions.

Figure 27-00.7: Flight Control Drain Holes (Sheet 1 of 2)

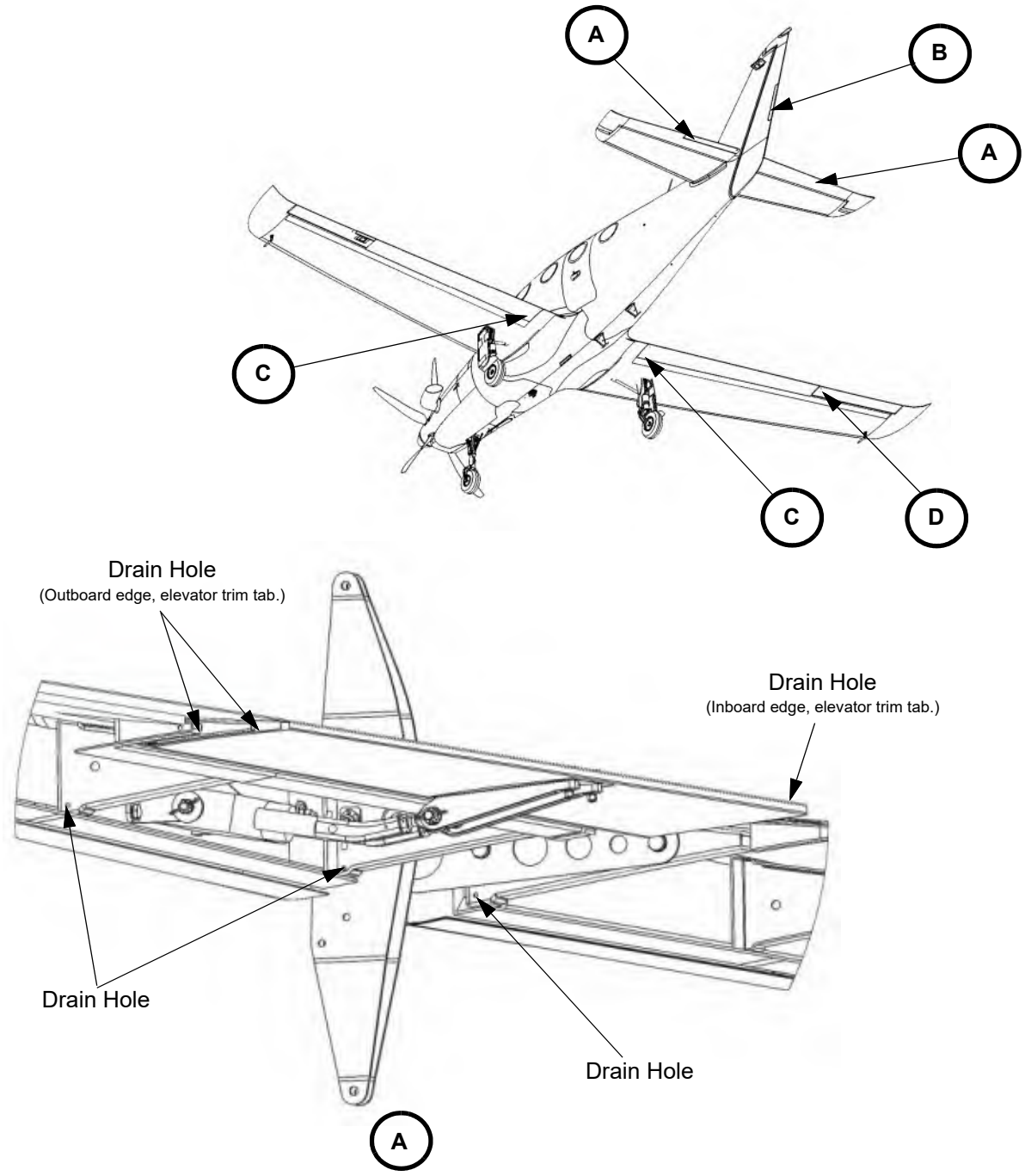

(Shown with Elevator Lower Skins Removed for Clarity)

Figure 27-00.7: Flight Control Drain Holes (Sheet 2 of 2)

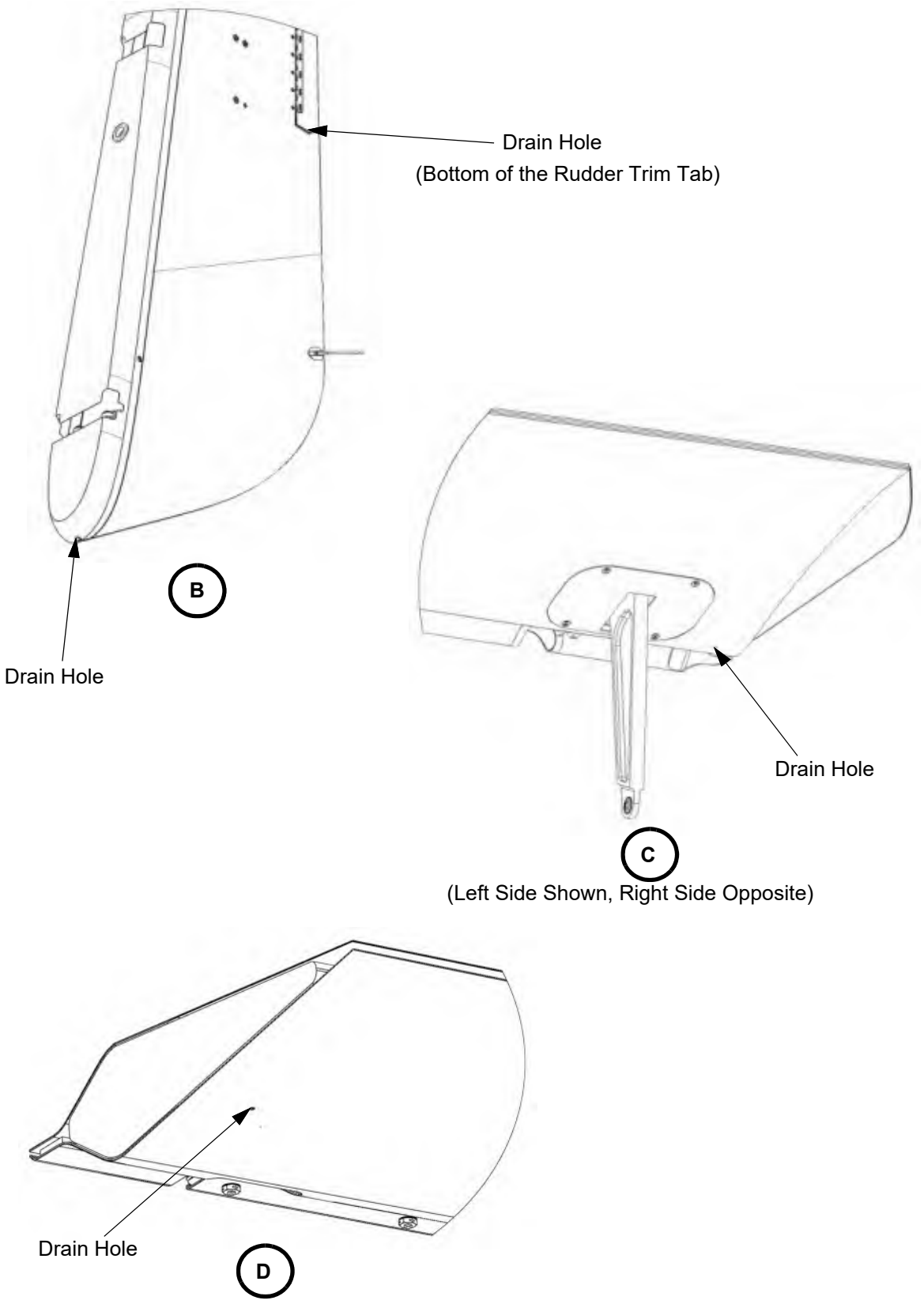

This Page Intentionally Left Blank

AILERON AND TAB

1. Description

Aileron movement and positioning is controlled by either the pilot's or copilot's yoke which are connected to cables that run down through the console to pulleys routing the cable to the inside of the leading edge of the wings then to bellcranks near the wing tips. The bellcranks drive push pull rods connected to the ailerons. Crossover cables between the yokes and between the bellcranks coordinate the motion of the both yokes to both the left and right ailerons.

2. Maintenance Practices

A. Aileron Neutral Position

Determine aileron neutral position using the following procedure:

(1) Remove the left and right wing tips, refer to Chapter 57-30.2.A.

(2) Install rigging pins into the left and right aileron bellcranks and the yoke control sector pulleys.

(3) Adjust the aileron surface to neutral. Aileron surface neutral position is defined by the following criteria:

(a) Leading Edge: Place a straight edge along the trailing edge wing skin to aileron surfaces. Surface to surface step between these two surfaces must be flush ± .050 inches when measured normal to the surface. Leading edge variation along the entire span of the aileron surface must be within ± .020 inches. Top and bottom surfaces are required to meet these criteria.

(b) Aileron Droop: Symmetric aileron droop position for both ailerons is set by rigging the trailing edge of aileron upper surface below the adjacent wingtip upper surface. Symmetric droop position must be between 0.030 and 0.100 inches.

(4) Maximum asymmetry between left and right aileron neutral position as defined by step (b). above is 0.050 inches.

B. Aileron Trim Tab Neutral Position

(1) The trailing edge of the aileron trim tab shall align with the trailing edge of the aileron.

Figure 27-10.1: Aileron and Trim Tab Neutral Position

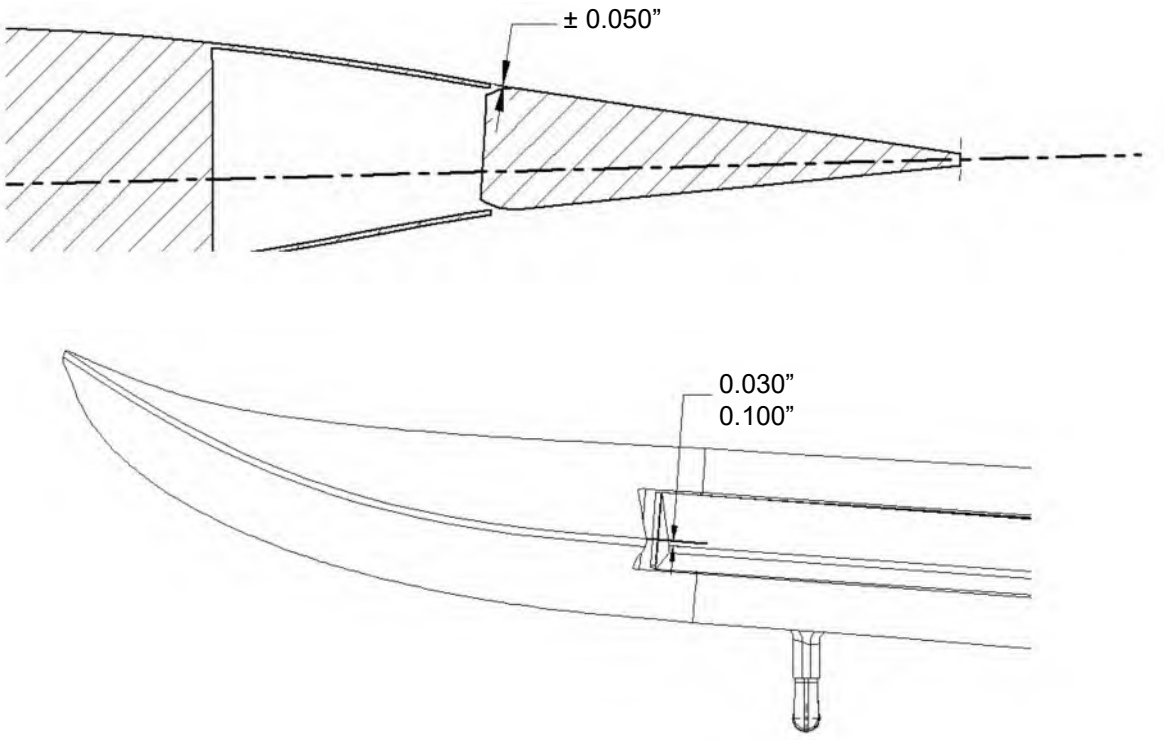

Aileron

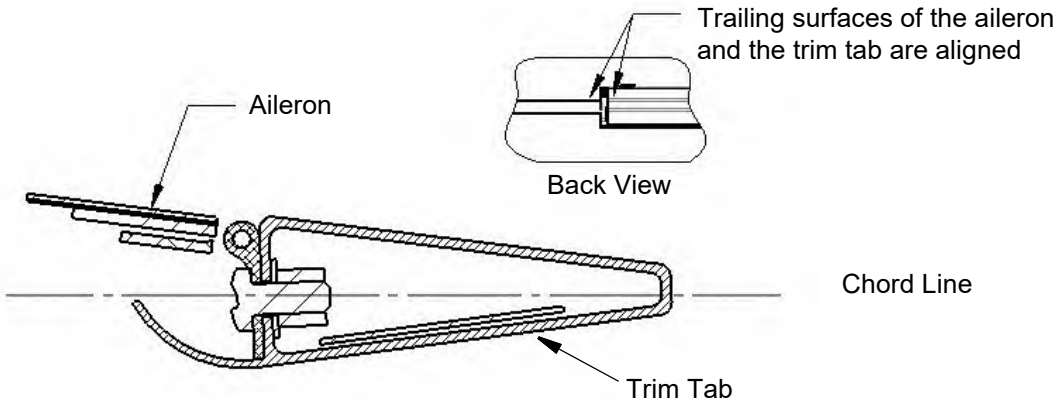

Aileron Trim Tab

C. Aileron Cables

There are four cables connected together using turnbuckles that control the ailerons. Cable removal and installation procedures are similar for all the cables. However, cable routing, pulley, and bellcrank locations will differ for each cable.

Figure 27-10.2: Aileron Cabling Schematic

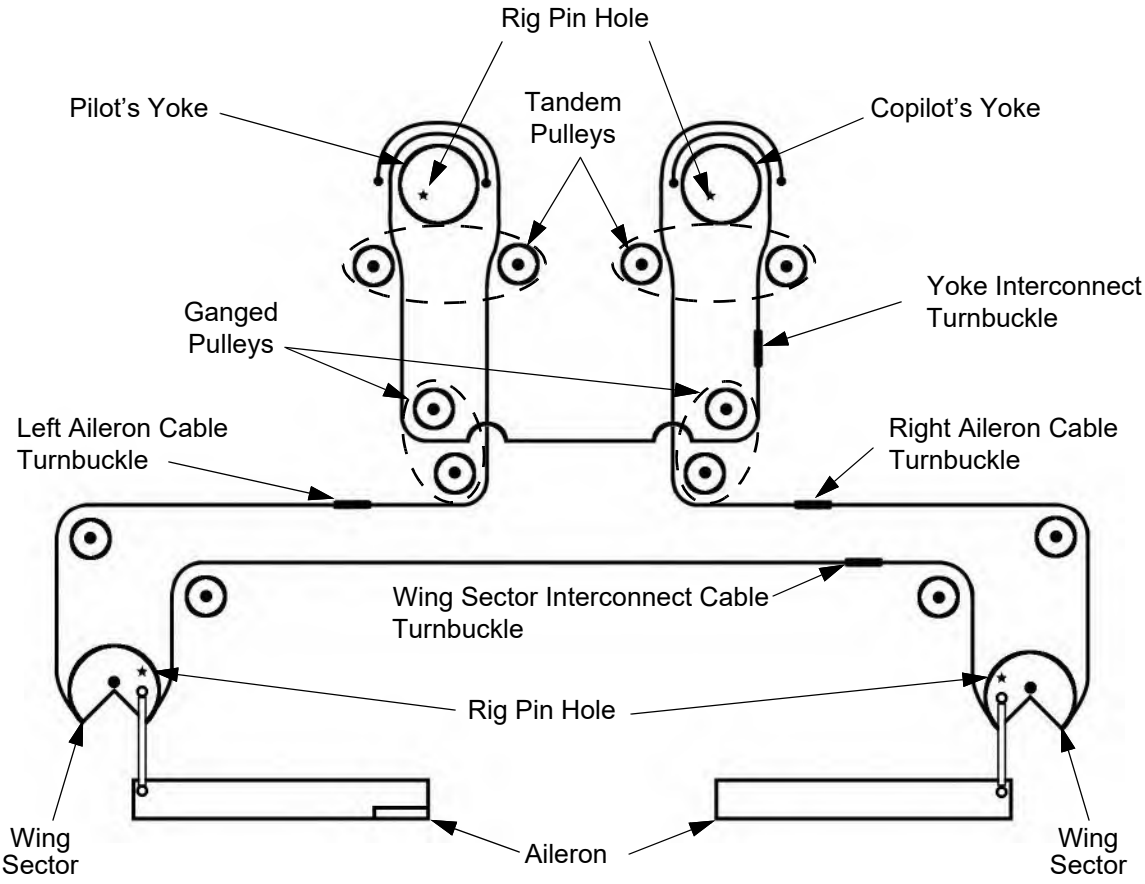

(1) Removal

(a) Remove the left and right wing tips, refer to Chapter 57-30.2.A.

(b) Remove PFD 1 and PFD 2, refer to Chapter 34-40.1.A.

(c) Remove crew seats, refer to Chapter 25-10.2.A.

(d) Remove the flight compartment carpet, refer to Chapter 25-10.2.E.

(e) Remove access panels 1RW, 1LW, 5RW, and 2RC, refer to Chapter 6.

(f) Install rigging pins into the left and right aileron sectors and the yoke sectors.

(g) Disconnect the autopilot bridle cable, refer to Chapter 22-10.1.H. for S-Tec, or refer to Chapter 22-11.1.G. for Garmin.

(h) Disconnect the cables at the turnbuckles.

(i) Remove the cable seals at the penetrations through the pressure vessel.

(j) Remove the cable safeties from the pulleys.

(k) Remove the cable guards from the sectors.

(l) Remove the bolts and washers that attach the yoke sector to the sector support, Refer to Figure 27-10.3

(m) Carefully move the yoke sector aft to access the cable locks.

(n) Remove screws that attach the cable locks to the sectors.

(o) Disconnect the cables from the sectors.

(p) Attach a lead line to one end of the cable then pull the other end of the cable until it is removed from the airplane.

Note: Leave the lead line in place for installation of new cables.

(2) Installation

(a) Carefully route the cable into position using the lead line, and remove the lead line.

CAUTION: Make sure the cable is routed correctly on the pulleys.

(b) Install the cable safeties on the pulleys.

(c) Connect the cable to the sectors.

(d) Install the cable guards on the sectors.

(e) Carefully move the yoke sector forward to the sector support.

(f) Install the bolts and washers that attach the yoke sector to the sector support.

(g) Connect the cable ends to the turnbuckle. Tighten the turnbuckle enough to take slack out of the cable.

(h) Install the cable seals.

CAUTION: Failure to remove the rigging pins will make the ailerons inoperable.

(i) Remove the rigging pins.

(j) Adjust the cable tensions and rigging. Refer to refer to Chapter 27-10.1.I.

(k) Connect the autopilot bridle cable, refer to Chapter 22-10.1.H. for S-Tec, or refer to Chapter 22-11.1.G. for Garmin.

(l) Safety the turnbuckles.

(m) Install PFD 1 and PFD 2, refer to Chapter 34-40.1.A.

(n) Install the wing tips, refer to Chapter 57-30.2.A.

(o) Install the access panels, refer to Chapter 6.

(p) Install the flight compartment carpet refer to Chapter 25-10.2.E.

(q) Install the crew seats refer to Chapter 25-10.2.A.,

Figure 27-10.3: Aileron Cables (Sheet 1 of 2)

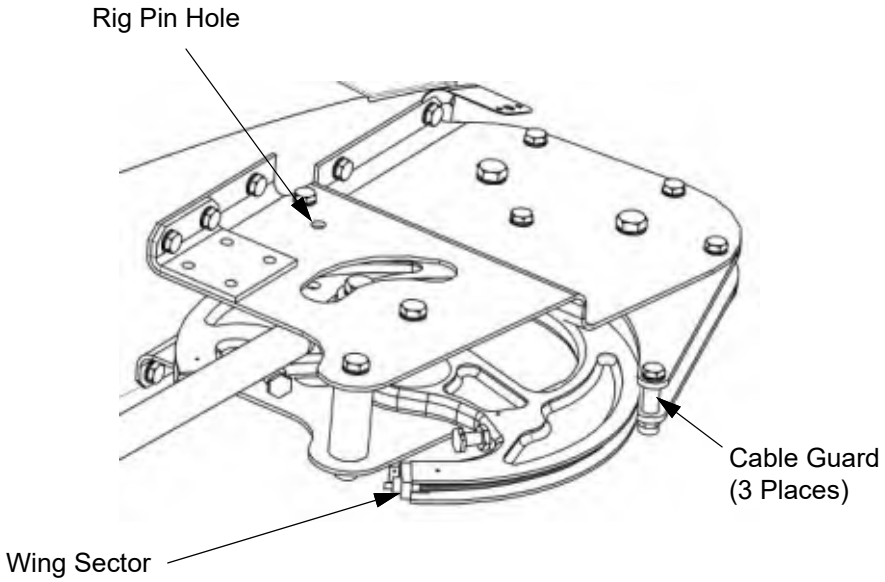

Right wing sector shown, left wing sector opposite.

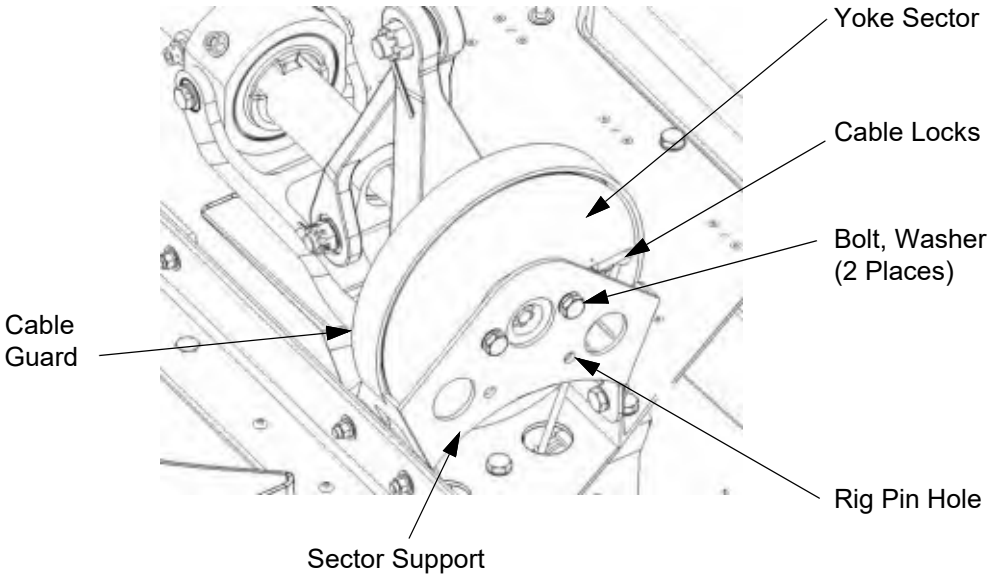

Right yoke sector shown, left yoke sector opposite.

Figure 27-10.4: Aileron Cables (Sheet 2 of 2)

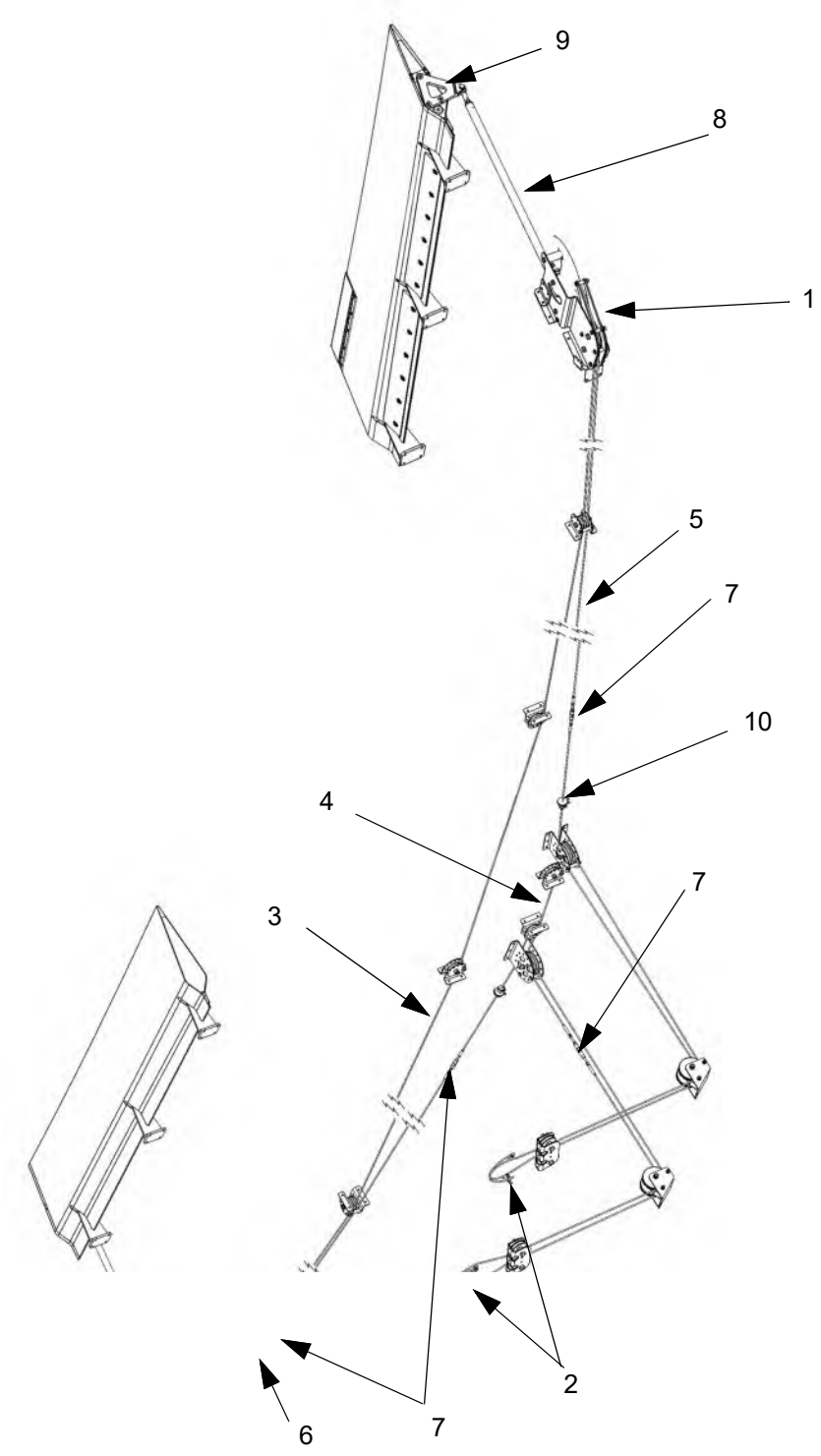

LEGEND

1. Wing Sector
2. Yoke Sector
3. Aileron Crossover Cable
4. Yoke Crossover Cable
5. Left Aileron Cable
6. Right Aileron Cable
7. Turnbuckle
8. PushRod
9. Aileron Horn
10. Cable Seals

D. Aileron System Pulleys

(1) Tandem Pulley (on the support under the instrument panel)

(a) Removal

(i) Remove the wing tips (refer to Chapter 57-30).
(ii) Insert a rigging pin into each of the aileron bellcranks and yoke control sector pulleys.
(iii) Remove the crew seats (refer to Chapter 25-10).
(iv) Remove the crew footwell carpet (refer to Chapter 25-10).
(v) Remove access panel 3RC (refer to Chapter 6) then loosen cable tension through the turnbuckle.
(vi) Disassemble the pulley to remove the retaining guides and the rollers.

Note: The tandem pulley bracket is bolted to the bottom of the instrument panel using hardware that is difficult to access without disassembling part of the instrument panel. It is easier to disassemble the pulley than to remove it. Do not remove the tandem pulley bracket unless it is damaged.

(b) Installation

(i) Route the aileron cables around the pulley rollers then install the rollers into the pulley bracket.
(ii) Install the cable retaining guides.Tighten the cables to the specified tension (refer to Chapter 27-00).
(iii) Ensure the ailerons are correctly rigged. Refer to Chapter 27-10. 2. I. Aileron Rigging and Adjustment.
(iv) Install the access panel and the carpet.

WARNING: Failure to remove the rigging pins will make the ailerons inoperable.

(v) Remove the rigging pins from the aileron bellcranks.
(vi) Install the wing tips (refer to Chapter 57-30).
(vii) Install the crew seats (refer to Chapter 25-10).

(2) Yoke to Wing Pulley

(a) Removal

(i) Remove the wing tips (refer to Chapter 57-30).
(ii) Insert a rigging pin into each of the aileron bellcranks.
(iii) Remove the crew seats (refer to Chapter 25-10).
(iv) Remove the crew footwell carpet (refer to Chapter 25-10).
(v) Remove access panel 3RC (refer to Chapter 6) then loosen cable tension via the turnbuckle.
(vi) Remove access panel 3LC (refer to Chapter 6) if removal of the left pulley is required.
(vii) Disassemble the pulley to remove the retaining guides and the rollers.

(viii) Remove the bolts and washers attaching the pulley bracket to the fuselage then remove the pulley bracket from the airplane.

(b) Installation

(i) Attach the pulley bracket to the fuselage using bolts and washers.
(ii) Route the aileron cables around the pulley rollers then install the rollers into the pulley bracket.
(iii) Install the cable retaining guides.
(iv) Tighten the cables to the specified tension (refer to Chapter 27-00).
(v) Ensure the ailerons are correctly rigged. Refer to Chapter 27-10. 2. I. Aileron Rigging and Adjustment.
(vi) Install the access panels (refer to Chapter 6) and the carpet (refer to Chapter 25-10).

WARNING: Failure to remove the rigging pins will make the ailerons inoperable.

(vii) Remove the rigging pins from the aileron bellcranks.
(viii) Install the wing tips (refer to Chapter 57-30).

(3) Inboard Wing Pulley

(a) Removal

(i) Remove the wing tips (refer to Chapter 57-30).
(ii) Insert a rigging pin into each of the aileron bellcranks.
(iii) Remove access panel 2RC (refer to Chapter 6) then loosen cable tension through the turnbuckles.
(iv) Remove access panel 3LC (refer to Chapter 6) for the left pulley or access panel 3RC for the right pulley.
(v) Disassemble the pulley to remove the retaining guides and the rollers.

Note: The pulley bracket halves are bolted to the fuselage rib using hardware that can only be accessed by removing the footwell floor. It is easier to disassemble the pulley than to remove it. Do not remove the pulley bracket halves unless they are damaged.

(b) Installation

(i) Route the aileron cables around the pulley rollers then install the rollers into the pulley bracket.
(ii) Install the cable retaining guides.
(iii) Tighten the cables to the specified tension (refer to Chapter 27-00).
(iv) Ensure the ailerons are correctly rigged. Refer to Chapter 27-10. 2. I. Aileron Rigging and Adjustment.
(v) Install the access panels (refer to Chapter 6) and carpet (refer to Chapter 25-10).

WARNING: Failure to remove the rigging pins will make the ailerons inoperable.

(vi) Remove the rigging pins from the aileron bellcranks.
(vii) Install the wing tips (refer to Chapter 57-30).

(4) Inboard Crossover Pulley

(a) Removal

(i) Remove the wing tips (refer to Chapter 57-30).
(ii) Insert a rigging pin into each of the aileron bellcranks.
(iii) Remove access panel 2RC (refer to Chapter 6) then loosen cable tension through the turnbuckles.
(iv) Remove access panel 3LC (refer to Chapter 6) for the left pulley or access panel 3RC (refer to Chapter 6) for the right pulley.
(v) Disassemble the pulley to remove the retaining guides and the rollers.

Note: The pulley bracket halves are bolted to flooring support components that form the compartment for the emergency landing gear blowdown system. It is easier to disassemble the pulley than to remove it. Do not remove the pulley bracket halves unless they are damaged.

(b) Installation

(i) Route the aileron cables around the pulley rollers then install the rollers into the pulley bracket.
(ii) Install the cable retaining guides.
(iii) Tighten the cables to the specified tension (refer to Chapter 27-00).
(iv) Ensure the ailerons are correctly rigged. Refer to Chapter 27-10. 2. I. Aileron Rigging and Adjustment.
(v) Install the access panels (refer to Chapter 6) and carpet (refer to Chapter 25-10).
(vi) Remove the rigging pins from the aileron bellcranks.

WARNING: Failure to remove the rigging pins will make the ailerons inoperable.

(vii) Install the wing tips (refer to Chapter 57-30).

(5) Outboard Wing Pulley

(a) Removal

(i) Remove the wing tips (refer to Chapter 57-30).
(ii) Insert a rigging pin into each of the aileron bellcranks.
(iii) Remove access panel 5RW (refer to Chapter 6) for the right turnbuckle or access panel 1LW (refer to Chapter 6) for the left turnbuckle then loosen cable tension.
(iv) Remove access panel 4RW (refer to Chapter 6) for the right outboard wing pulley or access panel 4LW (refer to Chapter 6) for the left outboard wing pulley.
(v) Remove the cable retaining bolts from the pulley.

(vi) Remove the nuts, washers, and bolts securing the pulley to the wing rib then remove the pulley from the airplane.

(b) Installation

(i) Attach the pulley to the rib using bolts, washers, and nuts.
(ii) Route the aileron cables into the pulley.
(iii) Install the cable retaining bolts.
(iv) Tighten the cables to the specified tension (refer to Chapter 27-00).
(v) Ensure the ailerons are correctly rigged. Refer to Chapter 27-10. 2. I. Aileron Rigging and Adjustment.
(vi) Install the access panels (refer to Chapter 6).

WARNING: Failure to remove the rigging pins will make the ailerons inoperable.

(vii) Remove the rigging pins from the aileron bellcranks.
(viii) Install the wing tips (refer to Chapter 57-30).

(6) Bellcrank Pulley(s)

(a) Removal

(i) Remove the wing tips (refer to Chapter 57-30).
(ii) Insert a rigging pin into each of the aileron bellcranks.
(iii) Remove access panel 5RW (refer to Chapter 6) for the right turnbuckle or access panel 1LW (refer to Chapter 6) for the left turnbuckle then loosen cable tension.
(iv) Remove the cable retaining bolts from the bellcrank.
(v) Remove the nuts, washers, and bolts securing the pulley(s) to the bellcrank then remove the pulley(s) from the airplane.

(b) Installation

(i) Insert the pulley(s) into the bellcrank.
(ii) Attach the pulley(s) to the bellcrank using bolts, washers, and castellated nuts.
(iii) Route the aileron cable(s) into the pulley(s).
(iv) Install the cable retaining bolts.
(v) Tighten the cables to the specified tension (refer to Chapter 27-00).
(vi) Ensure the ailerons are correctly rigged. Refer to Chapter 27-10. 2. I. Aileron Rigging and Adjustment.
(vii) Install the access panels (refer to Chapter 6).

WARNING: Failure to remove the rigging pins will make the ailerons inoperable.

(viii) Remove the rigging pins from the aileron bellcranks.
(ix) Install the wing tips (refer to Chapter 57-30).

Figure 27-10.4: Aileron Pulley System (Sheet 1 of 3)

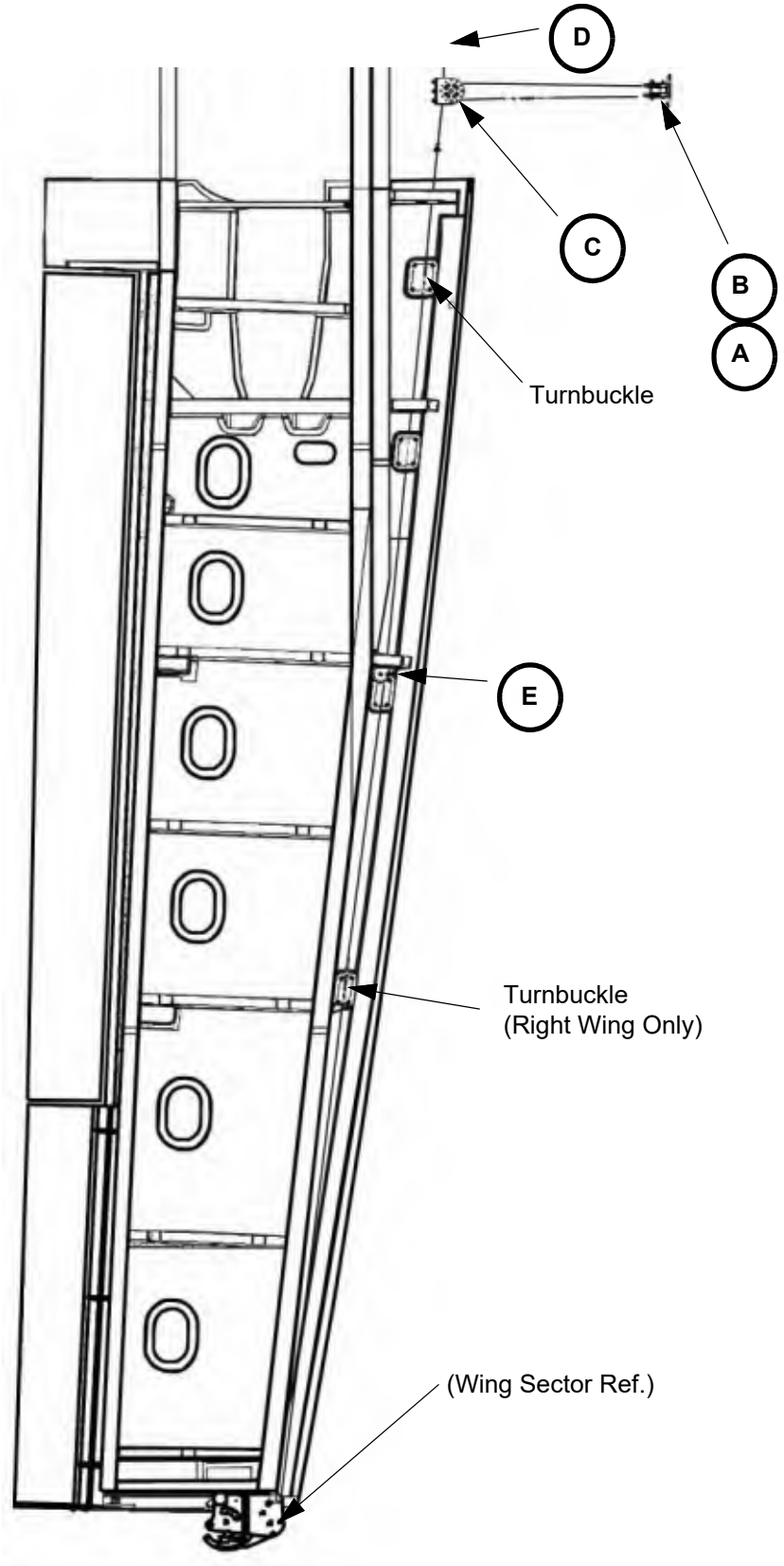

Right wing shown, left wing opposite.

Figure 27-10.4: Aileron Pulley System (Sheet 2 of 3)

LEGEND

1. Bolt
2. Washer
3. Nut
4. Cotter Pin
5. Pulley
6. Bracket
7. Pulley Block
8. Spacer

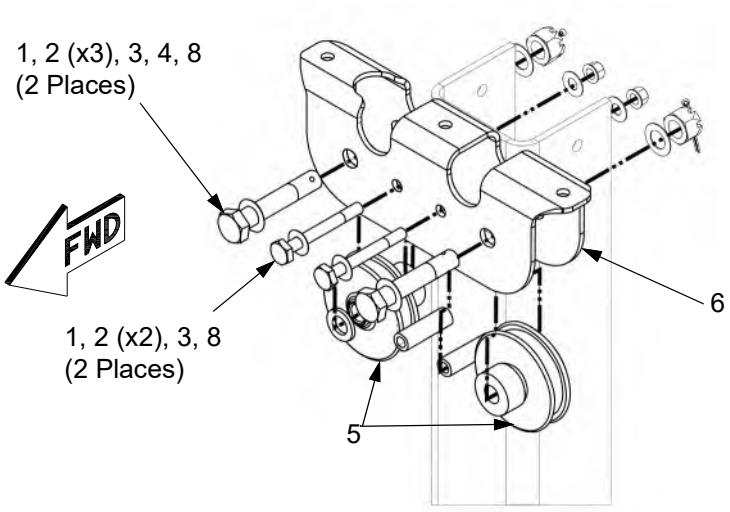

A

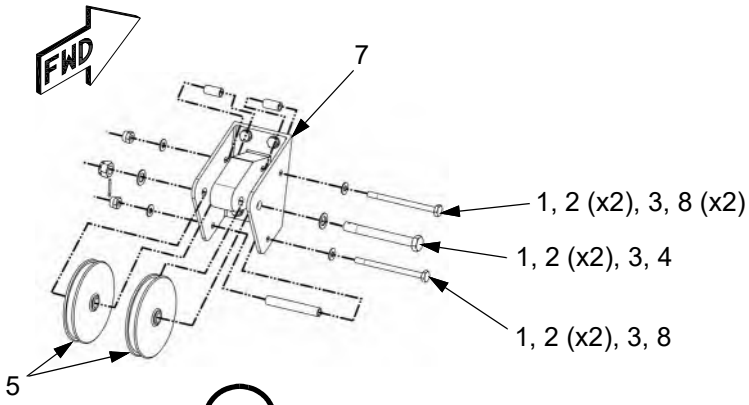

B

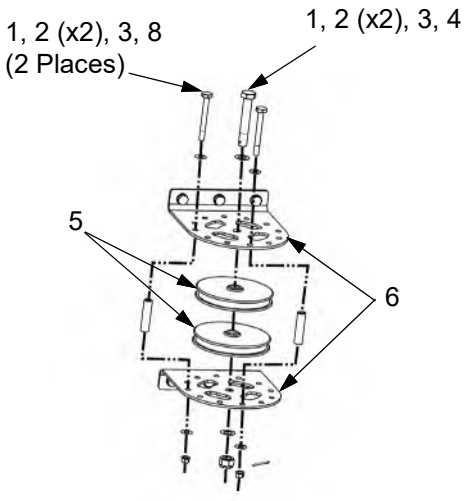

C

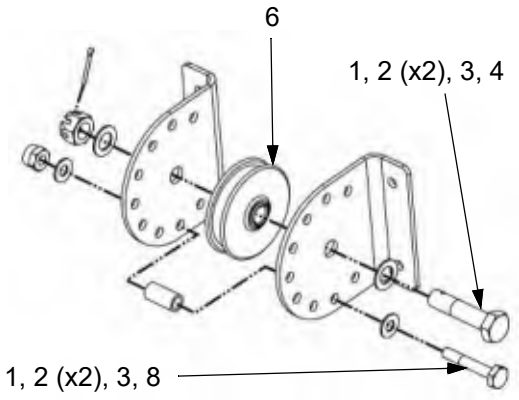

D

FWD

FWD

Figure 27-10.4: Aileron Pulley System (Sheet 3 of 3)

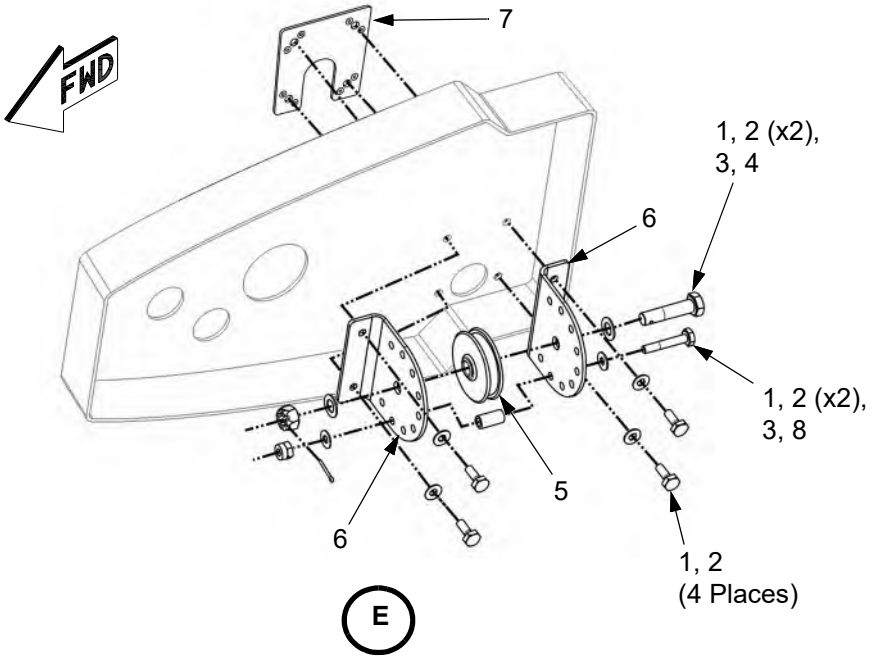

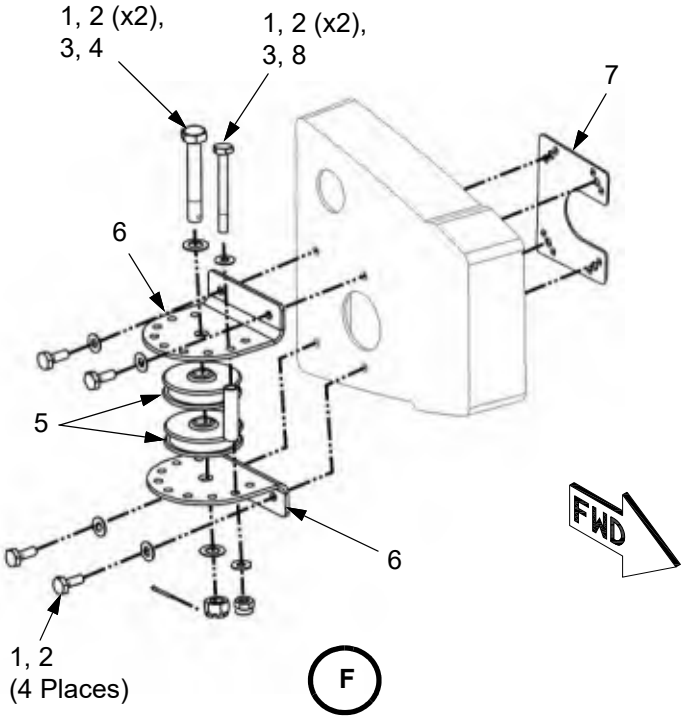

LEGEND

1. Bolt
2. Washer
3. Nut
4. Cotter Pin
5. Pulley
6. Bracket
7. Backing Plate
8. Spacer

E. Wing Tip Sector

Removal and installation procedures for the left and right sectors are similar.

(1) Removal

(a) Remove the wing tip (refer to Chapter 57-30).

(b) Disconnect the pushrod from the sector.

(c) Remove access panel 5RW (refer to Chapter 6) for the right turnbuckle or access panel 1LW (refer to Chapter 6) for the left turnbuckle and loosen the cable adequately to remove the cables from the sector.

(d) Remove the cable guard and travel stop from the brackets.

(e) Disconnect the cables from the sector.

(f) Remove the bolt, washers, nut, and cotter pin that attach the sector to the brackets, and remove the sector from the brackets.

(2) Installation

(a) Put the sector in position in the brackets.

(b) Install the bolt, washers, nut, and cotter pin that attach the sector to the brackets.

(c) Connect the cables to the sector.

(d) Install the cable guard and travel stop on the brackets.

(e) Verify correct rigging and operation of the aileron system. Refer to Chapter 27-10. 2. I. Aileron Rigging and Adjustment.

(f) Install access panel 5RW (refer to Chapter 6) for the right turnbuckle or access panel 1LW (refer to Chapter 6) for the left turnbuckle.

(g) Install the wing tip (refer to Chapter 57-30).

Figure 27-10.5: Wing Tip Sector

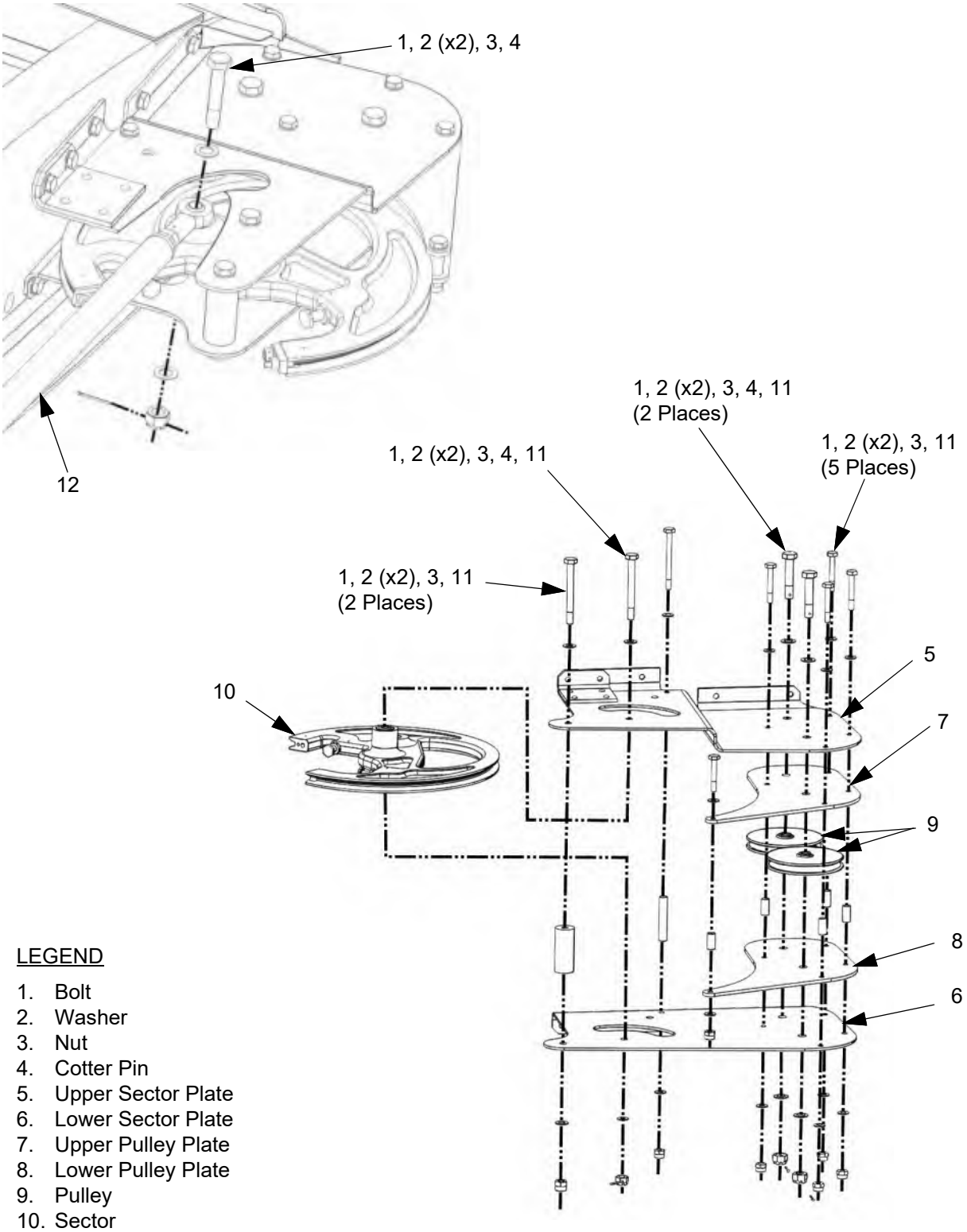

LEGEND

1. Bolt
2. Washer
3. Nut
4. Cotter Pin
5. Upper Sector Plate
6. Lower Sector Plate
7. Upper Pulley Plate
8. Lower Pulley Plate
9. Pulley
10. Sector
11. Spacer
12. Pushrod

F. Trim Tab

(1) Removal

(a) Disconnect external electrical power from the airplane (refer to Chapter 24-40).

(b) Set the BATT 1 and BATT 2 switches to off.

(c) Open the AIL TRIM circuit breaker.

(d) Remove the fasteners that attach the actuator rod-ends to the trim tab horns.

Note: Operating or rotating the actuator rods and arms with the trim tab disconnected will change the rigging of the trim tab and require re-adjustment or re-rigging.

(e) Remove the screws attaching the trim tab to the aileron then remove the trim tab from the airplane.

(2) Installation

(a) Put the trim tab in position and install the screws that attach the trim tab to the aileron.

(b) Install the fasteners that attach the actuator rod-ends to the trim tab horns.

(c) Close the AIL TRIM circuit breaker.

(d) Verify trim tab travels, refer to Chapter 27-10. 2. I. Aileron Rigging and Adjustment.

(e) Do the Operational Check of the trim tab.

(3) Operational Check

(a) Make sure the aileron trim tab moves smoothly through it’s full range of travel.

Figure 27-10.6: Trim Tab

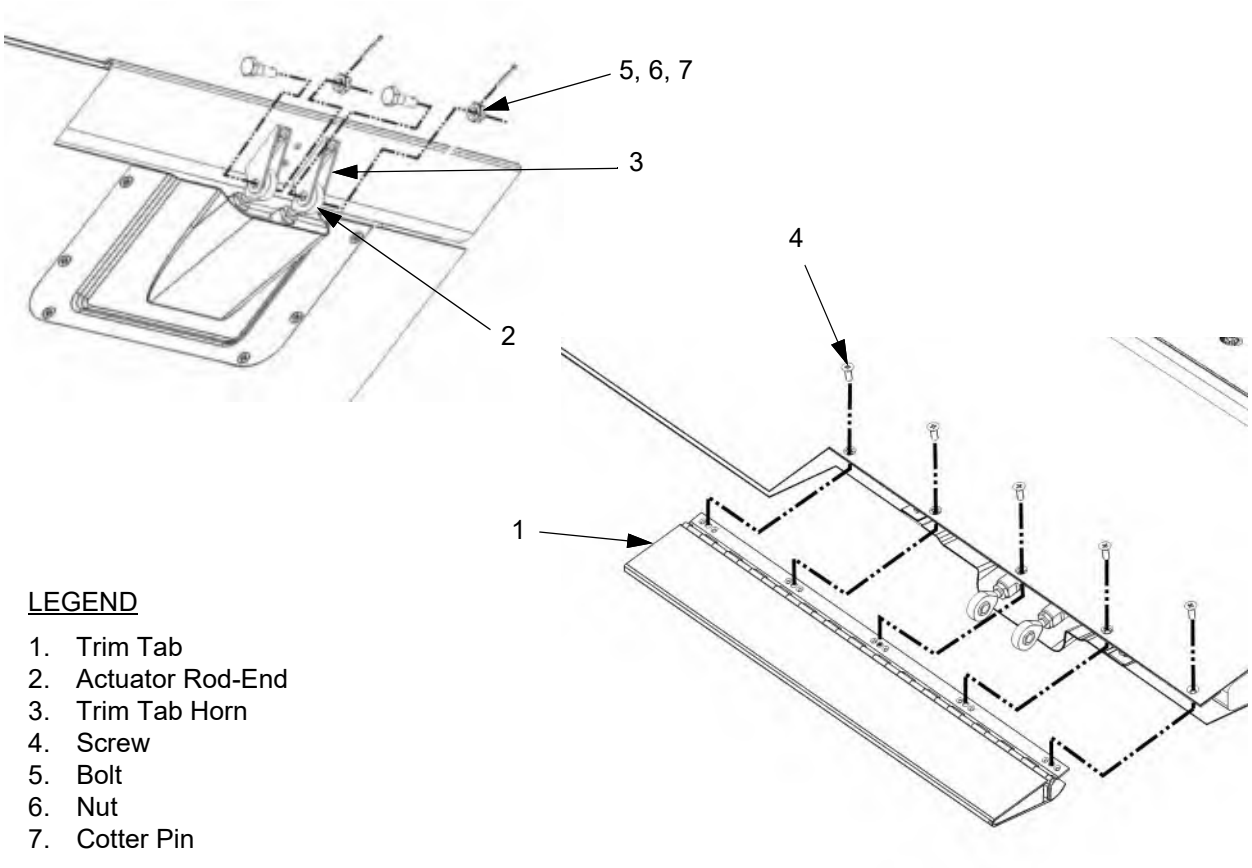

LEGEND

1. Trim Tab
2. Actuator Rod-End
3. Trim Tab Horn
4. Screw
5. Bolt
6. Nut
7. Cotter Pin

G. Trim Tab Actuator

(1) Removal

(a) Disconnect external electrical power from the airplane, refer to Chapter 24-40.1.B.

(b) Set the BATT 1 and BATT 2 switches to off.

(c) Open the AIL TRIM circuit breaker.

(d) Remove the left aileron, refer to Chapter 57-60.2.A.

(e) Remove the access panel.

(f) Disconnect the actuator rod-ends from the trim tab horns.

(g) Remove the cotter pins, nuts, and washers that attach the trim tab actuator to the brackets.

(h) Remove the bolts and washers that attach the outboard trim tab actuator bracket to the aileron.

(i) Carefully move the actuator outboard and aft to access the wiring harness.

(j) Disconnect the wiring harness from the trim tab actuator.

(k) Remove the actuator from the aileron.

(2) Installation

(a) Connect the wiring harness to the trim tab actuator and feed the harness into the aileron.

(b) Put the actuator in position on the inboard bracket.

(c) Put the outboard bracket in position on the actuator and install the bolts and washers that attach the bracket to the aileron.

(d) Install the washers, nuts, and cotter pins that attach the actuator to the bracket.

(e) Connect the actuator rod-ends to the trim tab horns, do not torque or safety the fasteners

(f) Install the left aileron, refer to Chapter 57-60.2.A.

(g) Verify trim tab travels, refer to refer to Chapter 27-10.1.I..

(h) Do the Aileron Trim DAT Calibration, refer to Chapter 39-10.1.H. (SN: K003-K085, except K014) or refer to Chapter 39-11.1.H. (SN: K014, K086 and On).

(i) Do the Operational Check of the trim tab actuator.

(3) Operational Check

(a) Open the AIL TRIM circuit breaker.

(b) Push the Aileron Trim switch on both yokes and make sure there is no motion at the aileron trim tab.

(c) Reset the AIL TRIM circuit Breaker.

(d) On pilot side yoke, push the AILERON TRIM switch left. The trailing edge of aileron trim tab should go down.

(e) On the pilot side yoke, push the AILERON TRIM switch right. The trailing edge of aileron trim tab should go up.

(f) Repeat steps (d) and (e) for the copilot side yoke.

(g) Using either the pilot or copilot side yoke, push and hold the AILERON TRIM switch, ensure the trim tab is in motion.

(h) With the trim tab in motion push the TRIM/AP DISC switch for less than 1 second and make sure the trim tab stops moving immediately.

(i) Push and hold the TRIM/AP DISC switch.

(j) Make sure the TRIM DISC CAS message illuminates approximately 1.25 seconds after being pushed.

(k) Push the AILERON TRIM switch on both yokes. There should be no motion at the aileron trim tab.

(l) Push the TRIM RESET switch located on the pilot side yoke.

(m) Make sure the TRIM DISC CAS message extinguishes.

(n) Push the AILERON TRIM switch on both yokes. Aileron trim tab motion should be restored.

Figure 27-10.7: Trim Tab Actuator

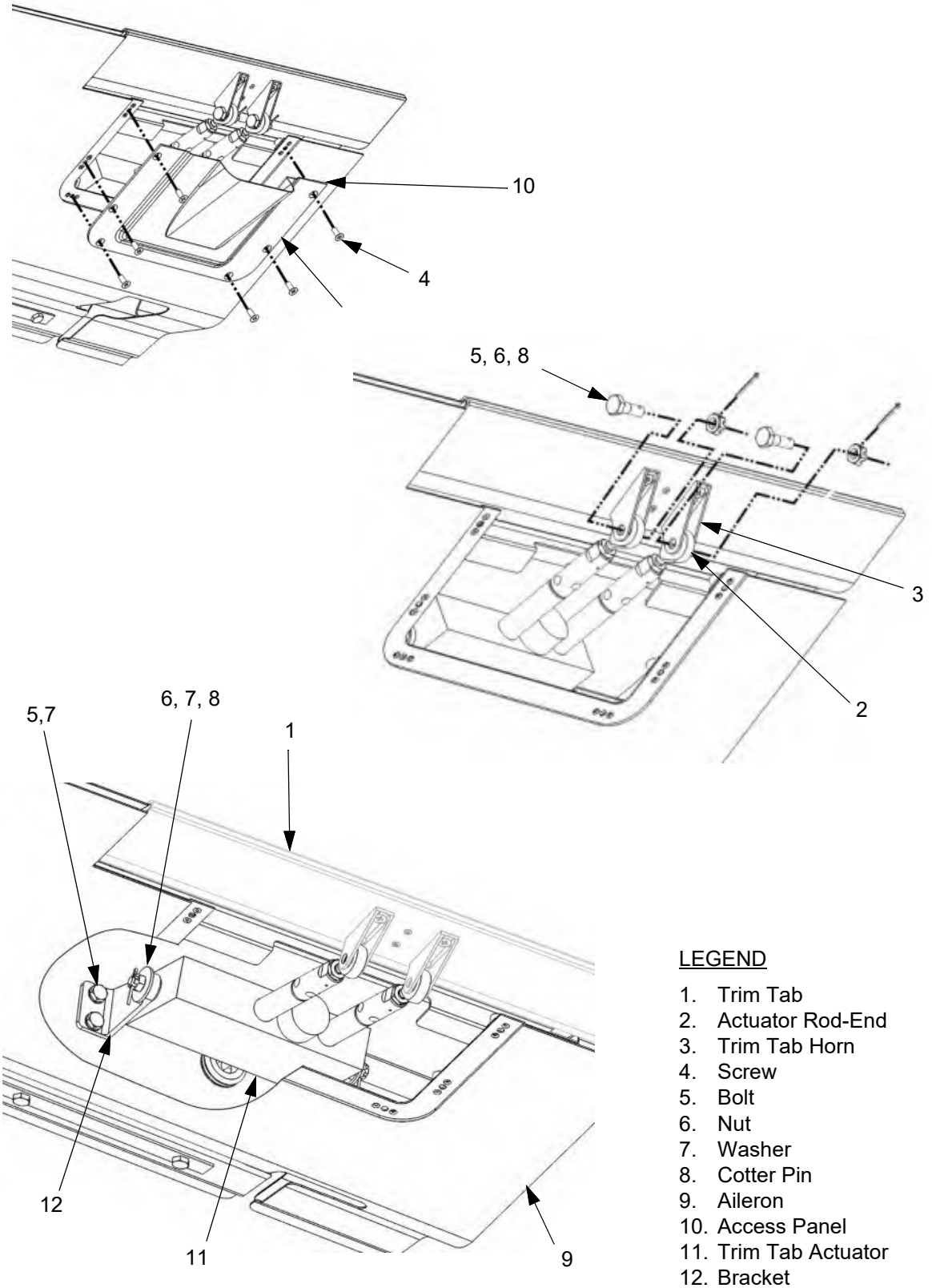

LEGEND

1. Trim Tab
2. Actuator Rod-End
3. Trim Tab Horn
4. Screw
5. Bolt
6. Nut
7. Washer
8. Cotter Pin
9. Aileron
10. Access Panel
11. Trim Tab Actuator
12. Bracket

H. Right Aileron Drain Hole

Ensure the moisture drain hole in the underside of the right aileron is clear and unobstructed.

Figure 27-10.8: Drain Hole

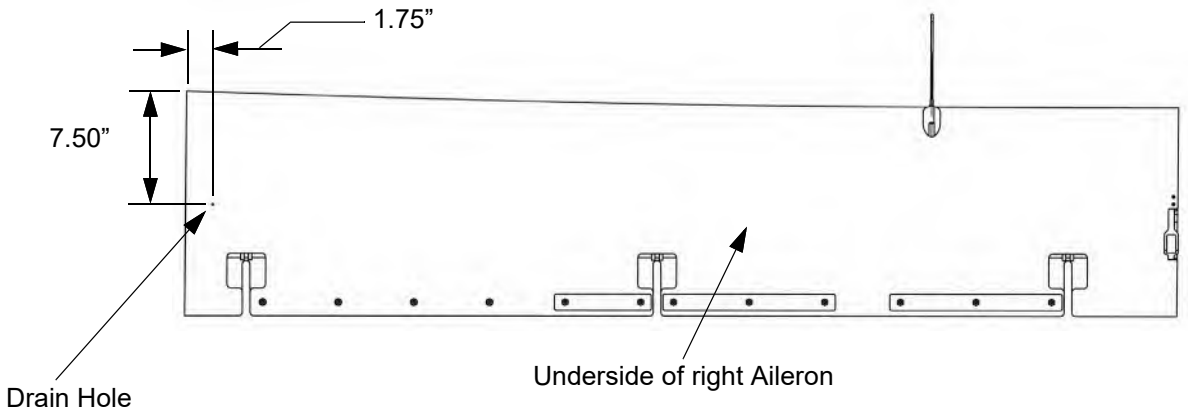

I. Aileron Rigging and Adjustment

Note: The tension in all cables is as specified in Chapter 27-00.

(1) Put the airplane in a climate controlled hangar.
(2) Make the airplane level.
(3) Let the temperature of the airplane stabilize for a minimum of 3 hours before doing any inspection, rigging, or adjustments.
(4) Remove the cockpit center floor panel (refer to Chapter 53-20).
(5) Remove the left and right wing tips (refer to Chapter 57-30).
(6) Install rigging pins into the left and right aileron sectors and the yoke sectors.
(7) Test the cable tension on the yoke interconnect. Adjust the tension as necessary using the turnbuckle on the copilot’s side forward of the main wing spar.
(8) Test the cable tension on the left and right aileron cables. Adjust the tension as necessary using the turnbuckles outboard of the wing root aft of the wing leading edge.
(9) Test the cable tension of the aileron interconnect cable. Adjust the tension as required. The access to the turnbuckle is through the farthest outboard access panel at the leading edge of the right wing.
(10) After all cable tensions have been tested and adjusted, verify the turnbuckles line up with the grooves for the safety clips.
(11) Retest and adjust cable tension if adjustment on the turnbuckles was necessary for the safety clips to be installed.
(12) Install the turnbuckle safety clips or install safety wire, as applicable.

Note: Any aileron cable that is adjusted will affect the cable tensions of the entire aileron control system. During adjustment, split the difference of adjustments to systematically reach required system tension. This will minimize a tendency to chase the tensions throughout the system.

(13) Ailerons out of neutral may be adjusted by rotating the push pull rod between the aileron and wing sector as follows:

(a) Disconnect the aileron(s) from the sector to aileron push pull rod (s).

(b) Find the neutral position for the aileron(s).

(c) Adjust the length of the push pull rod ends to match the neutral position of the aileron(s). Check for proper thread engagement in the rod ends.

(d) Verify the ailerons are still in the neutral position after tightening the connecting rod end jam nuts.

(14) Verify the left and right aileron sectors are hitting the aileron travel stops.

Note: Do not adjust the aileron travel stops without first verifying the cables are correctly tensioned.

(15) Verify that aileron travel conforms to the following. Adjust the deflection as necessary.

(a) Using a zeroed digital protractor, adjust the aileron sector stops to give correct aileron travel.

(b) Remove the safety wire then loosen the jam nut. Adjust as necessary.

(c) Tightening either stop will increase the angle of deflection, loosening either stop will decrease the angle.

Note: Do not exceed the maximum length of the stops measured from the face of the sector to the underside of the stop head of 0.95” for a NAS428CHA11 bolt or 0.825” for a NAS428CHA12 bolt.

(d) After achieving the correct angle of deflection, tighten the jam nut and install safety wire.

Note: The correct UP angle deflection should yield the correct DOWN angle deflection on the opposite aileron.

(16) Aileron trim tab travel check and adjustment, refer to Figure 27-10.10:

Note: Actuator travel adjustment is limited to adjustment of the pushrod length.

(a) Put the aileron and trim tab into the neutral position. Make sure the trailing edges of the aileron and trim tab are aligned.

(b) Put a digital level on the trim tab and zero the level.

(c) Run the trim tab full up and down and make sure up and down travels are both 17° +/-2°.

(d) If adjustment is necessary, do the steps that follow:

(i) Set the trim tab to neutral.

(ii) Loosen the jam nuts on the trim tab actuator rod ends.

(iii) Remove the cotter pins and nuts that attach the actuator to the trim tab. Leave the bolts in place.

(iv) Run the tab to its full up travel.

(1) If up travel needs to increase, remove the bolts from the tab horns and turn both rod ends out equally to increase the up travel.

(2) If up travel needs to decrease, remove the bolts from the tab horns and turn both rod ends in equally to decrease the up travel.

WARNING: Make sure both bolts are a slip-fit when reconnecting the actuator to the trim tab to prevent binding in the actuator.

(v) Reconnect the rod ends to the tab horns with the bolts and make sure the travel is 17° +/-2°.

(vi) Set the trim tab to neutral, trailing edge aligned with the aileron, and zero the digital level.

(vii) Run the trim tab full down and make sure the travel is 17° +/-2°.

(viii) Make adjustments as needed to make sure up and down travel are 17° +/-2°.

(ix) Torque the pushrod jam nuts.

(x) Install the nuts and cotter pins that attach the actuator to the trim tab.

WARNING: Failure to remove the rigging pins will make the ailerons inoperable.

(17) Ensure all the rigging pins have been removed.

(18) Perform a functional check of the aileron control system.

(a) Operate the aileron control system from the flight deck controls.

(b) Confirm the aileron control system is free from jamming, binding, or excessive friction.

(c) Confirm the ailerons move in the correct direction per wheel direction. The right aileron shall go up with right yoke input.

(19) Install the wing tips (refer to Chapter 57-30).

Figure 27-10.9: Aileron Rigging

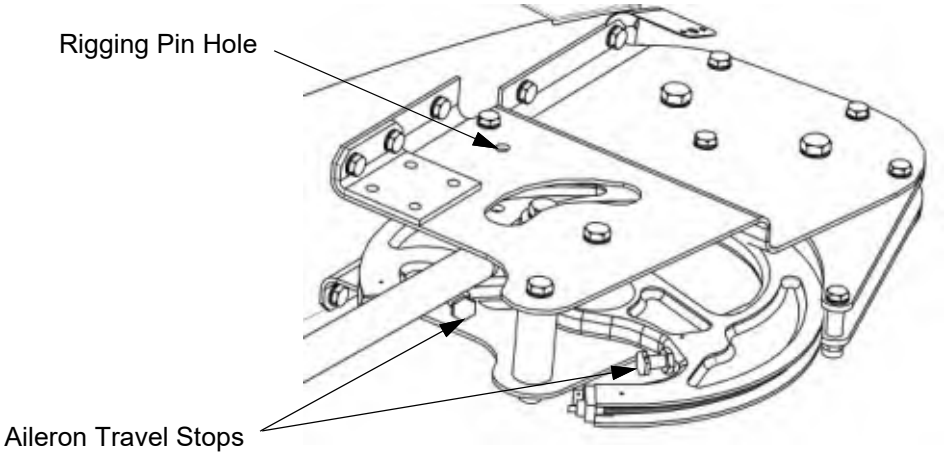

Right bellcrank shown, left bellcrank opposite.

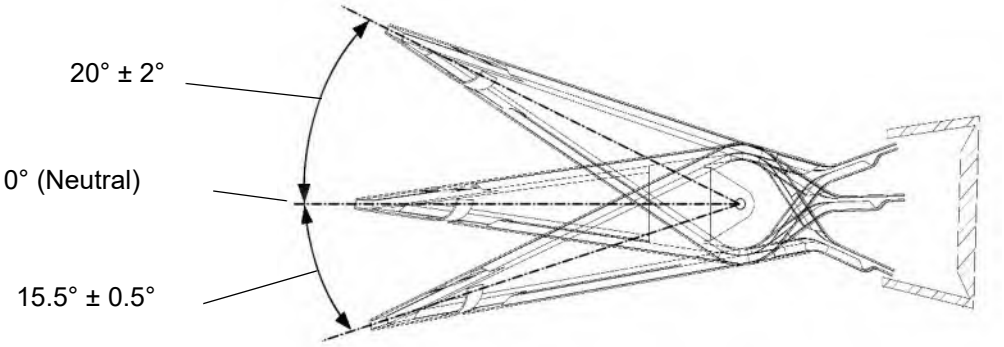

Figure 27-10.10: Aileron Trim Tab Rigging

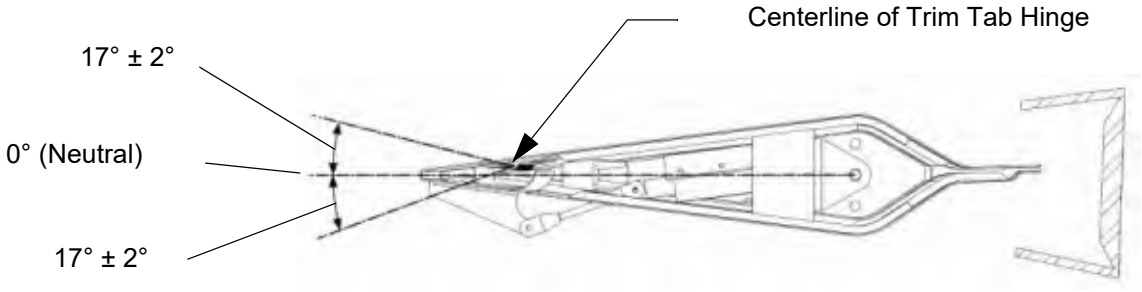

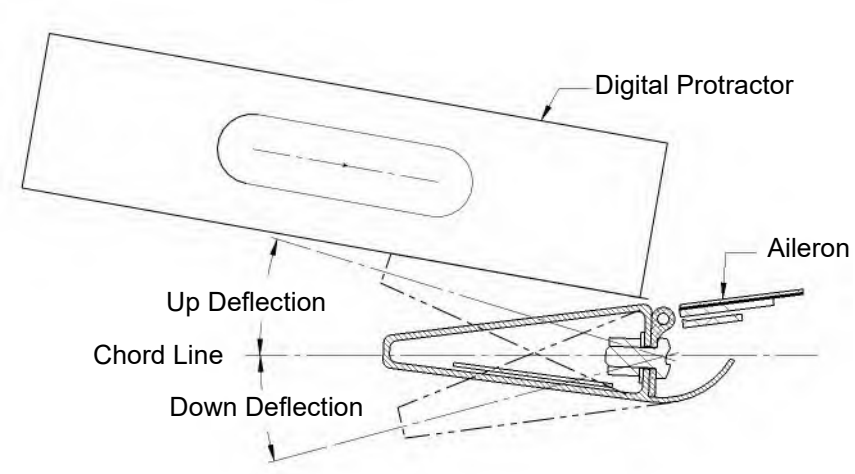

J. Yoke Rigging Adjustment

With the ailerons in the neutral position, inspect the yokes to ensure they are in the neutral position. A string put horizontally across both yokes provides functional reference.

The yoke interconnect cable is much shorter than the wing sector interconnect cable which extends from wing tip to wing tip. Toe in and toe out positions of the pilot's and copilot's yoke are indicators that one of the interconnect cables requires adjustment. One level and one crooked yoke will indicate that one of the left or right forward cables from yoke to sector requires adjustment. Refer to Figure 27-10.1 and Table 27-10.1 which provide troubleshooting guidelines for neutralizing the control yoke assemblies. In general, balancing cable tensions will correctly align the yokes and set the ailerons to the neutral position.

Table 27-10.1: Aileron Adjustment Guidelines

Condition	Yoke Interconnect Cable	Wing Sector Interconnect Cable	Left Aileron Cable	Right Aileron Cable
Both yokes toed in	Tighten	Loosen		
Both yokes toed out	Loosen	Tighten		
Left yoke toed in			Loosen	Tighten
Left yoke toed out			Tighten	Loosen
Right yoke toed in			Tighten	Loosen
Right yoke toed out			Loosen	Tighten
Yoke turned left does not cause wing sector to contact the stops	Tighten	Loosen	Tighten	Loosen
Yoke turned right does not cause the wing sector to contact the stops	Loosen	Tighten	Loosen	Tighten

K. Inspection

(1) Remove crew seats, refer to Chapter 25-10.2.A..
(2) Remove the crew footwell carpet, refer to Chapter 25-10.2.E.
(3) Remove both wing tips and access panels 1RW, 1LW, 2RW, 2LW, 3RW, 3LW, 4RW, 4LW, 5RW, 5LW, 2RC, 2LC, 3RC, and 3LC (refer to Chapter 6).
(4) Verify the aileron control cable tension is as specified in Chapter 27-00.
(5) Verify there is no checking or flat spots on the cables. Cables that are found to be shiny or show wear should be replaced.

Note: Move the cables through their full travel to inspect where the cables contact the pulleys.

(6) Use a cotton cloth to run over the exposed cable to check for individual cable strand breaks.

(7) Check condition of the cable swaged ends.

(8) Verify aileron deflections (20° +/-2° up and 15.5° +/-0.5° down).

Note: The correct UP angle deflection should yield the correct DOWN angle deflection on the opposite aileron.

(9) Verify the maximum length of the UP and DOWN stops on the aileron bellcrank measured from the face of the bellcrank to the underside of the stop head are 0.95 inches for a NAS428CHA12 bolt or 0.825” for a NAS428CHA11 bolt.

(10) Verify aileron trim deflections (17° +/-2° up and down).

(11) Remove the aileron trim tab actuator access panel.

(12) Inspect the trim tab actuator

(a) Verify no chafing of the trim tab actuator wiring harness.

(b) Verify no cracking in the actuator motor case or grease out of the actuator.

(c) Verify the rod ends and fasteners are in good condition.

(13) Verify aileron hinges move freely with no binding through their full range of motion.

(14) Verify no cracks in the hinges.

(15) Verify a 0.020” wire will not pass through the witness hole of all rod ends.

(16) Verify free and correct operation of the aileron control system.

(17) Verify that the full range of motion in the yoke control is limited only by properly set aileron and elevator stops. The yoke may bottom out at the same time as the elevator stops but not before.

(18) Ensure the yoke control operates freely and correctly, with no binding, scraping, jamming, excessive friction, or any other characteristics that may cause unsafe performance of the system. The yoke control should not make any contact with components behind the instrument panel before the elevator or ailerons contact the end stops.

(19) Verify correct safety wire and cotter pins installation on all fasteners.

(20) Verify correct turnbuckle clip installation or safety wiring on all turnbuckles.

(21) Install the access panels (refer to Chapter 6).

Note: Remove all foreign object debris before installing the access panels.

(22) Install the carpet and crew seats. Refer to Chapter 25-10.

RUDDER AND TAB

1. Description

The yaw axis of the airplane is controlled by a rudder and with rudder trim. The rudder is controlled using rudder pedals attached to linkage, control rods, torque tubes, and cables. The torque tubes transfer pilot and copilot inputs to the cables and pulleys. The rudder is attached, and pivots, on three hinges on the aft end of the vertical stabilizer. The rudder cables are attached to the rudder horn which also acts as the lower rudder hinge and has adjustable stops to adjust the rudder travel. A rudder trim actuator, trim tab, and trim indicator are the trim components controlled from either yoke.

2. Maintenance Practices

A. Rudder Neutral Position

In the neutral position the bisected trailing edge thickness of the rudder at WL 151.75 coincides with the projected chord line of the vertical stabilizer within 3/16”.

Figure 27-20.1: Rudder Neutral Position

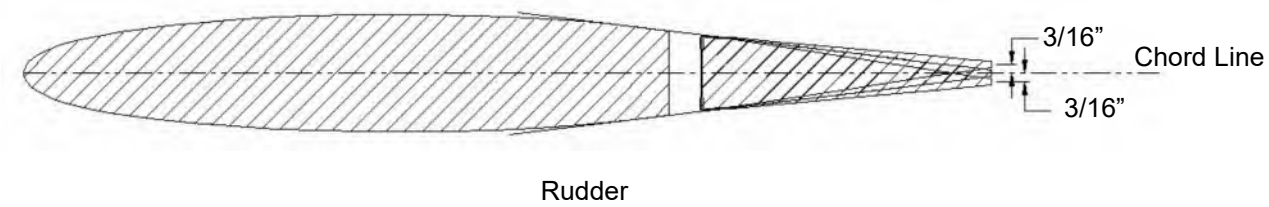

B. Rudder Trim Tab Neutral Position

Trim tab neutral position is shown below.

Figure 27-20.2: Rudder Trim Tab Neutral Position

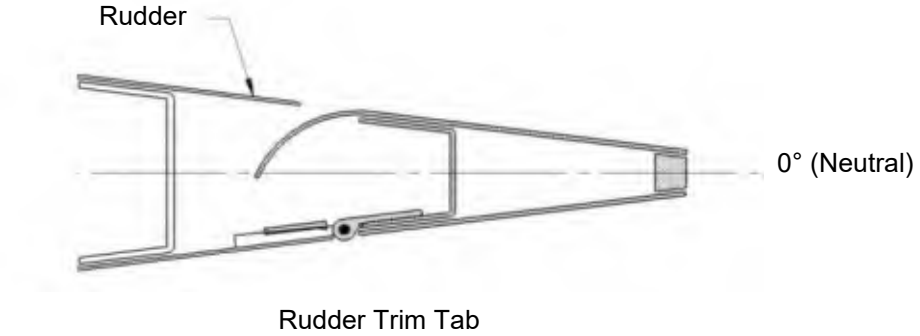

C. Rudder Cables

(1) Removal

(a) Remove the crew seats (refer to Chapter 25-10).

(b) Remove the flight compartment carpet (refer to Chapter 25-10).

(c) Remove access panels 2C, 3LC, 1LE, 1RE, and the fire extinguisher door and panel (refer to Chapter 6).

(d) Remove floor panels (refer to Chapter 53-20), as necessary.

(e) Remove the pressure bulkhead access panel (refer to Chapter 21-30).

(f) Remove the airplane belly panels (refer to Chapter 57-10).

(g) Install a rig pin in the rudder bellcrank.

(h) Disconnect the cables at the turnbuckles.

(i) Remove the cable seals at the penetrations through the pressure vessel.

(j) Remove the cable safeties from the pulleys.

(k) Disconnect the cable from the torque tubes and rudder actuator arm.

(l) Disconnect the autopilot bridle cable, refer to Chapter 22-10.2.H. for S-Tec, or refer to Chapter 22-11.2.G. for Garmin.

(m) Attach a lead line to one end of the cable then pull the other end of the cable until it is removed from the airplane.

Note: Leave the lead line in place for installation of the new cable.

(2) Installation

(a) Carefully route the cable into position using the lead line, and remove the lead line

CAUTION: Make sure the cable is routed correctly on the pulleys.

(b) Install the cable safeties on the pulleys.

(c) Connect the cable to the torque tube and the rudder actuator arm.

(d) Connect the cable ends to the turnbuckle. Tighten the turnbuckle enough to take slack out of the cable.

(e) Install the rubber grommet in the pressure bulkhead.

CAUTION: Failure to remove the rig pin will make the rudder inoperable.

(f) Remove the rig pin from the rudder bellcrank.

(g) Adjust the cable tensions and rigging (refer to Section 27-20. 2. K. Rudder Rigging and Adjustment).

(h) Connect the autopilot servo bridle cable, refer to Chapter 22-10.2.H. for S-Tec, or refer to Chapter 22-11.2.G. for Garmin.

(i) Safety the turnbuckles.

(j) Make sure the rudder control system is free from jamming, binding, or excessive friction.

(k) Make sure the rudder moves in the correct direction with the input:

(i) Left Pedal Fwd = Rudder Trailing Edge Left

(ii) Right Pedal Fwd = Rudder Trailing Edge Right

(l) Install the access panels (refer to Chapter 6).

(m) Install the floor panel (refer to Chapter 53-20).

(n) Install the pressure bulkhead access panel (refer to Chapter 21-30).

(o) Install the flight compartment carpet (refer to Chapter 25-10).

(p) Install the crew seats (refer to Chapter 25-10).

Figure 27-20.3: Rudder Cables

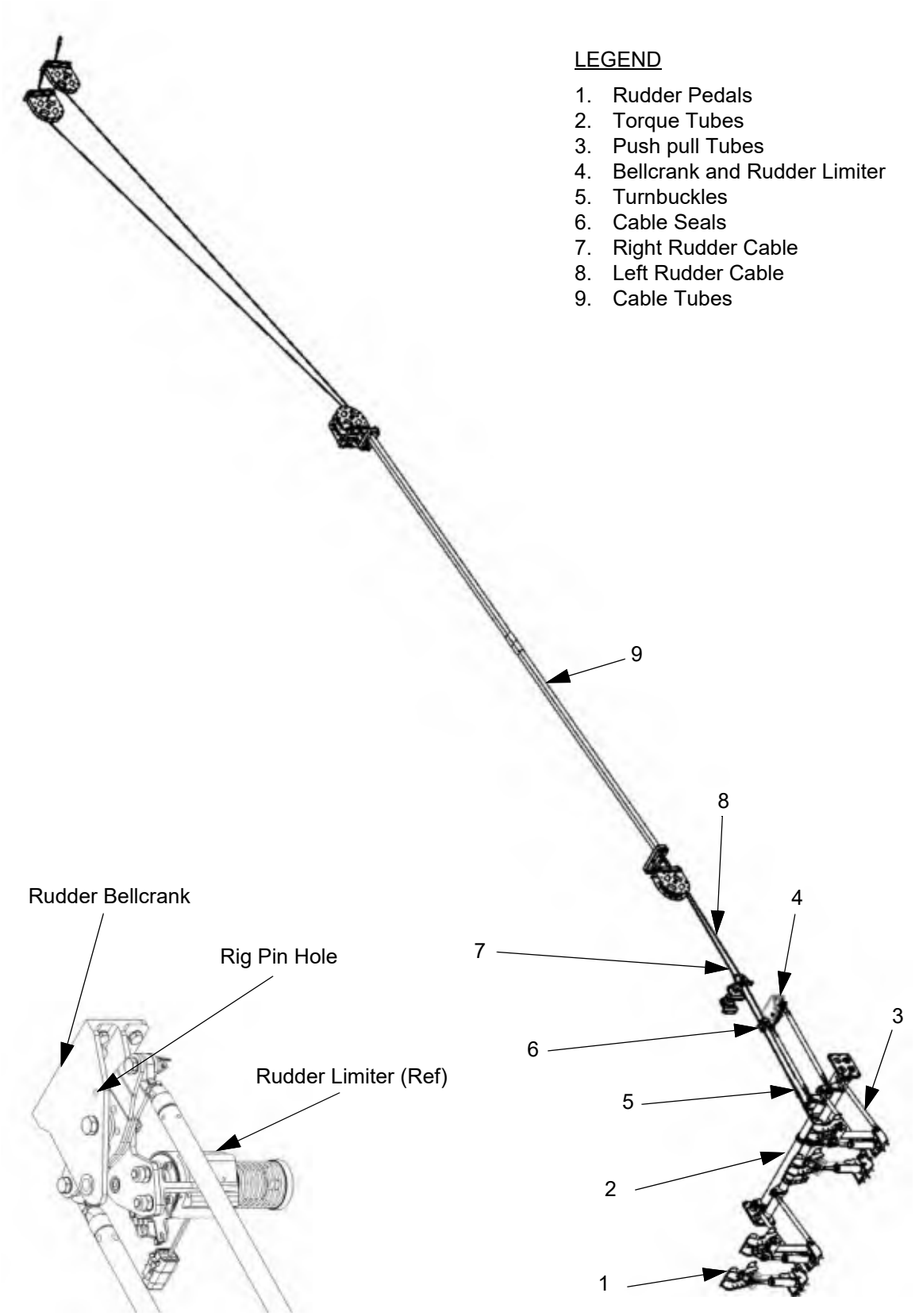

D. Rudder Pulleys System

Note: Refer to Figure 27-20.4 for pulley locations

(1) FWD Spar Saddle Pulley

(a) Removal

(i) Remove the crew carpet (refer to Chapter 25-10).

(ii) Remove the pilot seat (refer to Chapter 25-10).

(iii) Remove access panel 3L(refer to Chapter 6).

(iv) For aircraft SN: K014, K086 and on, remove the brake servo chain guard. (refer to Chapter 32-40).

(v) Open the emergency landing gear blowdown compartment and the fire extinguisher compartment.

(vi) Insert a rig pin in the bellcrank. For SN: K014, K086 and on, insert a rig pin through the access hole in the brake servo floor plate and into the bell-crank.

(vii) Loosen cable tension through the turnbuckles.

(viii) Remove the airplane belly panel (refer to Chapter 57-10).

(ix) Remove the cable retaining pins from the pulley.

(x) Remove the nuts, washers, and screws attaching the pulley to the shearbox then remove the pulley from the airplane.

(b) Installation

(i) Attach the pulley to the spar saddle using screws, washers, and nuts.

(ii) Route the rudder cables into the pulleys.

(iii) Install the cable retaining pin.

(iv) Tighten the cables to the specified tension. Refer to Chapter 27-00.

(v) Remove the rigging pin from the bellcrank.

(vi) Ensure the rudder is correctly rigged. Refer to Section 27-20. 2. K. Rud-der Rigging and Adjustment.

(vii) Install the brake servo chain guard (refer to Chapter 32-40), access panel (refer to Chapter 6), floor panel (refer to Chapter 53-20), and the carpet (refer to Chapter 25-10).

(2) AFT Spar Saddle Pulley

(a) Removal

(i) Remove the crew carpet (refer to Chapter 25-10).

(ii) Remove the pilot seat (refer to Chapter 25-10).

(iii) Remove access panel 3L(refer to Chapter 6).

(iv) For aircraft SN: K014, K086 and on, remove the brake servo chain guard. (refer to Chapter 32-40).

(v) Remove the airplane belly panel (refer to Chapter 57-10).

(vi) Insert a rig pin in the bellcrank. For SN: K014, K086 and on, insert a rig pin through the access hole in the brake servo floor plate and into the bellcrank.

(vii) Loosen cable tension through the turnbuckles.

(viii) Remove the cable retaining pin from the pulley.

(ix) Remove the nuts, washers, and screws attaching the pulley to the spar saddle then remove the pulley from the airplane.

(b) Installation

(i) Attach the pulley to the spar saddle using bolts, washers, and nuts.

(ii) Route the cable into the pulley.

(iii) Install the cable retaining pin.

(iv) Tighten the cables to the specified tension (refer to Chapter 27-00).

(v) Remove the rigging pin from the bellcrank.

(vi) Ensure the rudder is correctly rigged. Refer to Section 27-20. 2. K. Rudder Rigging and Adjustment.

(vii) Install the brake servo chain guard (refer to Chapter 32-40), access panels (refer to Chapter 6), floor panel (refer to Chapter 53-20), belly panels (refer to Chapter 57-10), and carpet (refer to Chapter 25-10).

(3) Pressure Bulkhead Pulley

(a) Removal

(i) Remove the crew carpet (refer to Chapter 25-10).

(ii) Remove the pilot seat (refer to Chapter 25-10).

(iii) Remove access panel 3L(refer to Chapter 6).

(iv) For aircraft SN: K014, K086 and on, remove the brake servo chain guard. (refer to Chapter 32-40).

(v) Open the emergency landing gear blowdown compartment and the fire extinguisher compartment.

(vi) Insert a rig pin in the bellcrank. For SN: K014, K086 and on, insert a rig pin through the access hole in the brake servo floor plate and into the bellcrank.

(vii) Loosen cable tension through the turnbuckles.

(viii) Remove the pressure bulkhead access panel (refer to Chapter 21-30).

(ix) Remove the cable retaining pins from the pulley.

(x) Remove the washers and bolts attaching the pulley to the pressure bulkhead then remove the pulley from the airplane.

(b) Installation

(i) Attach the pulley to the pressure bulkhead using bolts and washers.

(ii) Route the cable into the pulley.

(iii) Install the cable retaining pin.

(iv) Tighten the cables to the specified tension, refer to Section 27-0. 2. B. Cable Tension.

(v) Remove the rigging pin from the bellcrank.

(vi) Ensure the rudder is correctly rigged, refer to Section 27-20. 2. K. Rudder Rigging and Adjustment.

(vii) Install the access panels (refer to Chapter 6), floor panel (refer to Chapter 53-20), interior finish panel (refer to Chapter 25-50), and carpet (refer to Chapter 25-10).

(4) Rear Vertical Bulkhead Pulley

(a) Removal

(i) Remove the crew carpet (refer to Chapter 25-10).

(ii) Remove access panel 3L, 1L, and 1R (refer to Chapter 6).

(iii) For aircraft SN: K014, K086 and on, remove the brake servo chain guard, access panel 1L and 1R. (refer to Chapter 6 and Chapter 32-40).

(iv) Open the emergency landing gear blowdown compartment and the fire extinguisher compartment.

(v) Insert a rig pin in the bellcrank. For SN: K014, K086 and on, insert a rig pin through the access hole in the brake servo floor plate and into the bell-crank.

(vi) Loosen cable tension through the turnbuckles.

(vii) Remove the cable retaining pins from the pulley.

(viii) Remove the washers and bolts attaching the pulley to the vertical spar then remove the pulley from the airplane.

(b) Installation

(i) Attach the pulley to the vertical spar using bolts and washers.

(ii) Route the cable into the pulley.

(iii) Install the cable retaining pin.

(iv) Tighten the cables to the specified tension (refer to chapter 27-00).

(v) Remove the rigging pin from the bellcrank.

(vi) Ensure the rudder is correctly rigged. Refer to Section 27-20. 2. K. Rudder Rigging and Adjustment.

(vii) Install the access panels (refer to Chapter 6), floor panel (refer to Chapter 53-20), and carpet (refer to Chapter 25-10).

Figure 27-20.4: Rudder Pulleys System (Sheet 1 of 3)

LEGEND

1. Rudder Pedals
2. Bellcrank
3. Turnbuckles
4. Pushrods
5. Torque Tubes
6. Cable Seals
7. Left Rudder Cable
8. Right Rudder Cable
9. Rudder Cable Tubes
10. FWD Spar Saddle Pulley
11. AFT Spar Saddle Pulley
12. Pressure Bulkhead Pulley
13. Rear Vertical Bulkhead Pulley

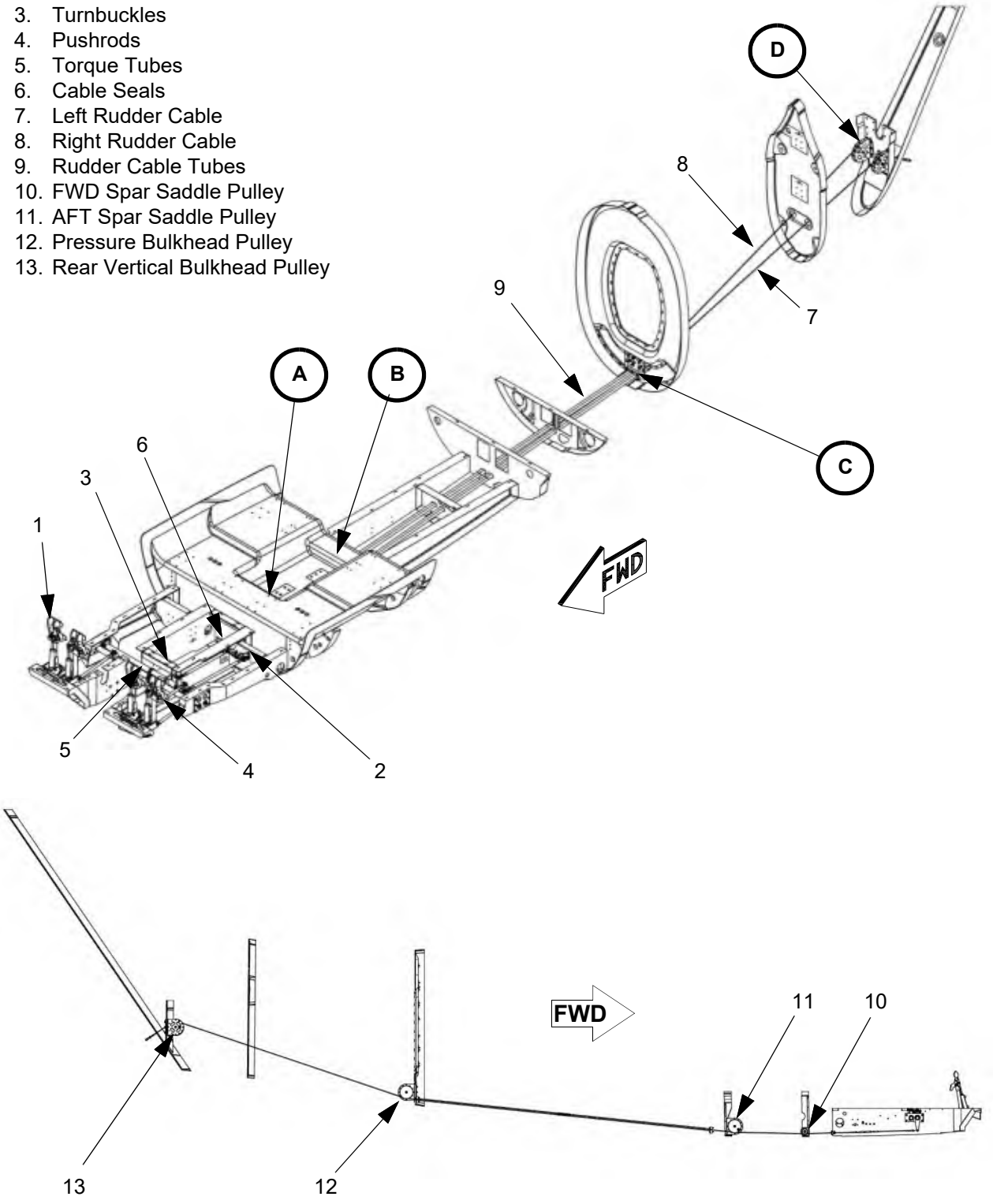

Figure 27-20.4: Rudder Pulleys System (Sheet 2 of 3)

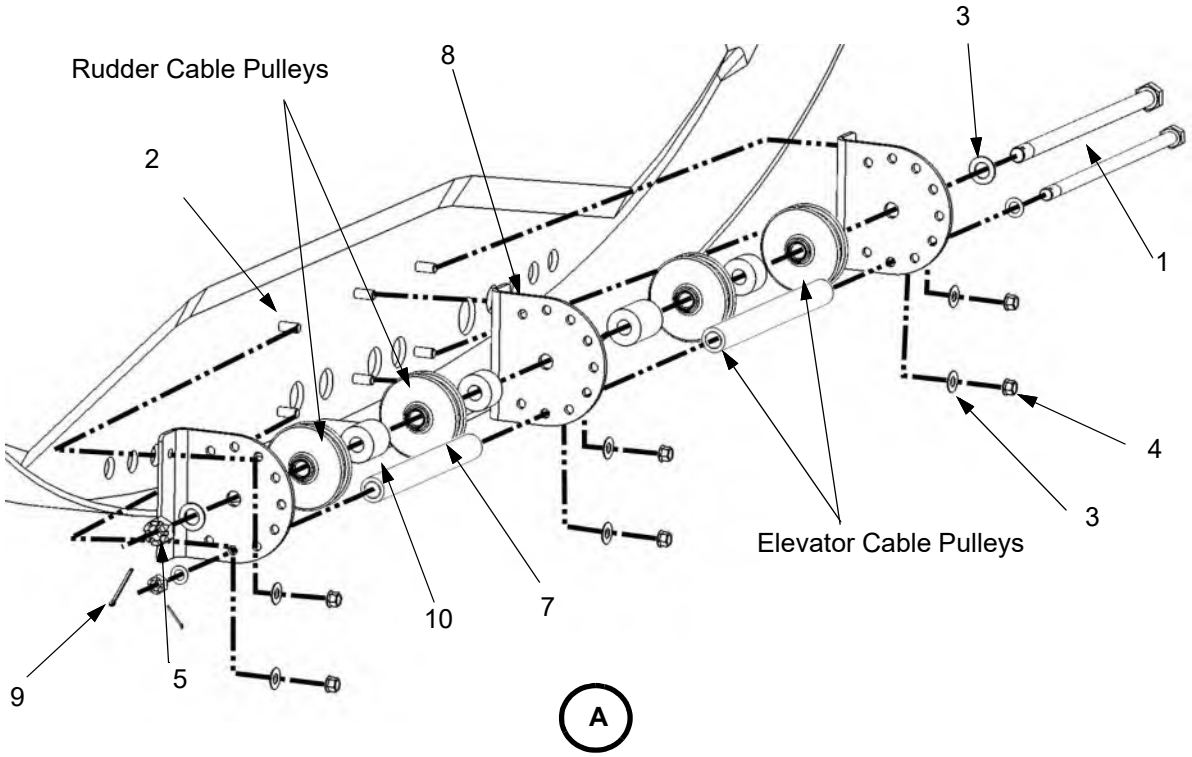

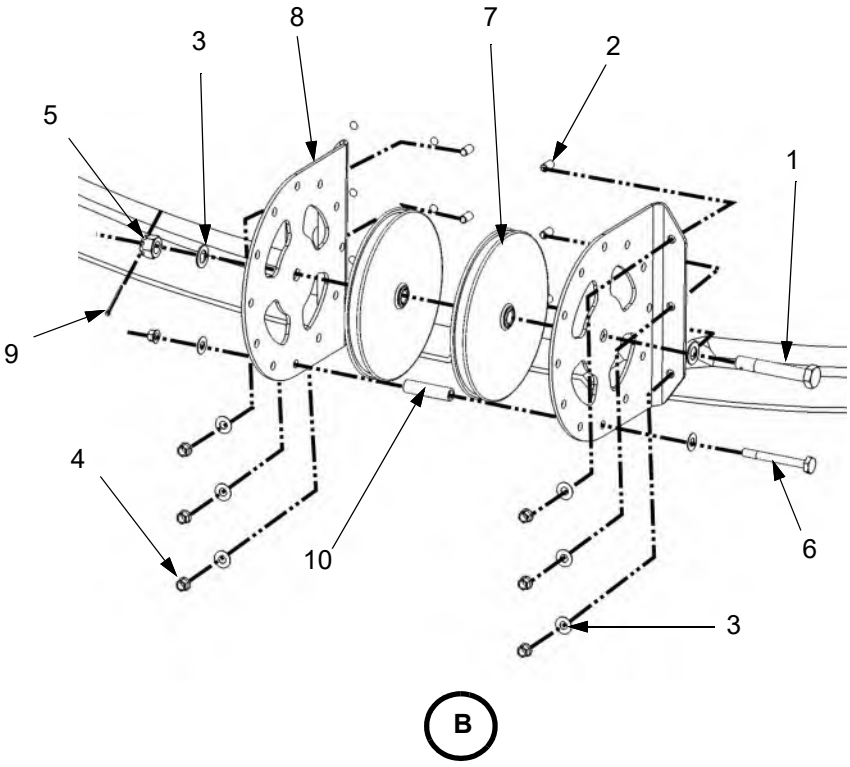

LEGEND

1. Bolt
2. Screw
3. Washer
4. Nut
5. Castellated Nut
6. Cable Retaining Pin
7. Roller
8. Bracket Half
9. Cotter Pin
10. Spacer

Figure 27-20.4: Rudder Pulleys System (Sheet 3 of 3)

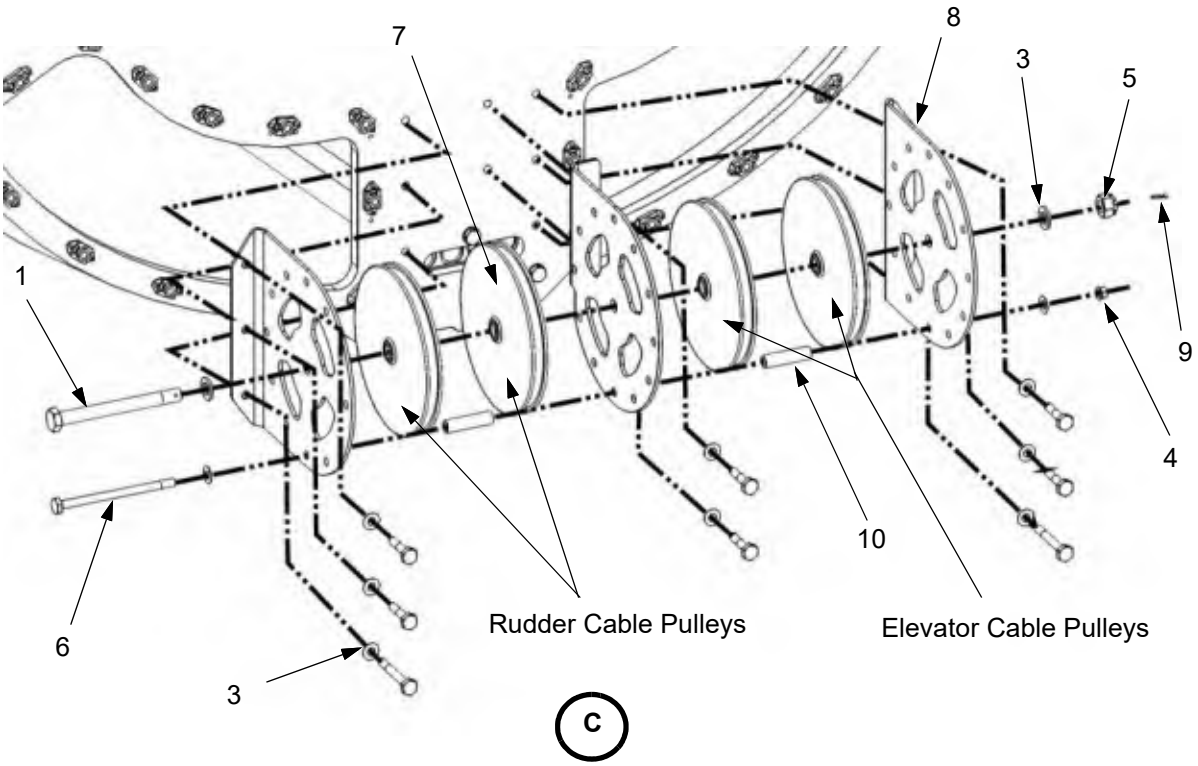

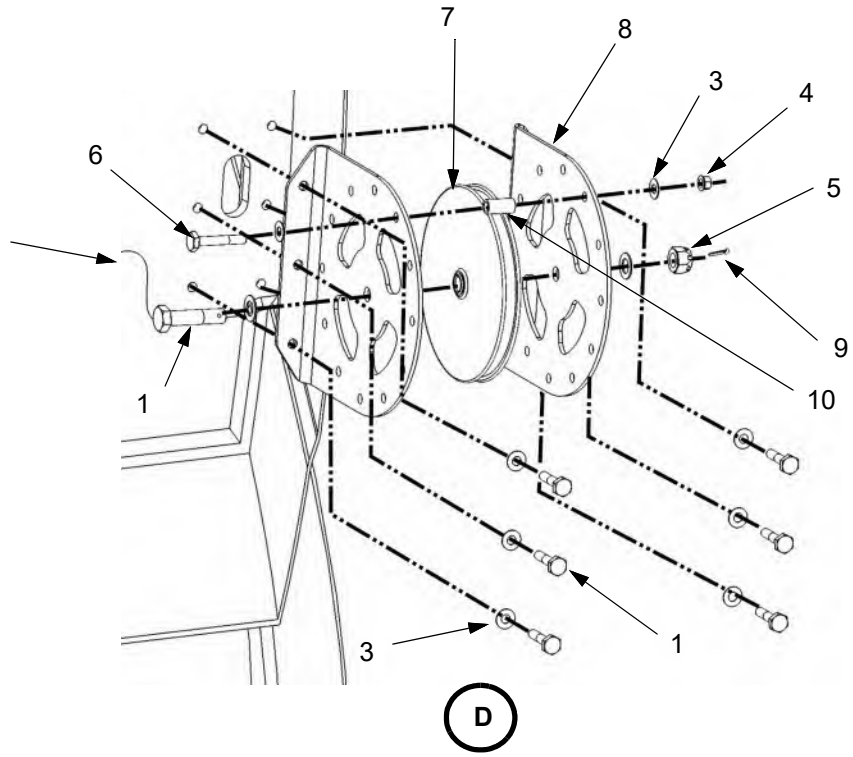

The right side pulley (not shown) is similar

LEGEND

1. Bolt
2. Screw
3. Washer
4. Nut
5. Castellated Nut
6. Cable Retaining Pin
7. Roller
8. Bracket Half
9. Cotter Pin
10. Spacer

E. Rudder Pedals

(1) Removal

(a) Remove the crew seats (refer to Chapter 25-10).

(b) Remove the flight compartment carpet and rudder pedal boots (refer to Chapter 25-10).

(c) Remove the flight compartment floor panels to access the rudder pedals and bellcrank (refer to Chapter 53-20).

(d) For aircraft SN: K014, K086 and on, remove the brake servo chain guard. (Chapter 32-40).

(e) Insert a rig pin in the bellcrank. For SN: K014, K086 and on, insert a rig pin through the access hole in the brake servo floor plate and into the bellcrank.

(f) Disconnect the pushrod from the rudder pedal arm.

(g) Disconnect the brake master cylinder from the rudder pedal.

(h) Disconnect the pedal and arm assembly from the bearing block then remove it from the airplane.

(2) Installation

(a) Put the pedal and arm assembly in the bearing block and install the bolt, washers, nut, and cotter pin.

(b) Connect the brake master cylinder to the rudder pedal. Finger tighten the fasteners and install a new cotter pin.

(c) Connect the pushrod to the rudder pedal arm.

(d) Remove the rig pin from the bellcrank.

(e) Check the rudder pedal angle and do the Pedal Angle Adjustment procedure as needed.

(f) Make sure the rudder pedals move freely through their full travel free from binding and excessive friction.

(g) Check brake function.

(h) Install the floor panels (refer to Chapter 53-20). For SN: K014, K086 and on, install the brake servo chain guard.

(i) Install the flight compartment carpet and rudder pedal boots (refer to Chapter 25-10).

(j) Install the crew seats (refer to Chapter 25-10).

(3) Pedal Angle Adjustment

The angle of the pedals is adjusted by lengthening or shortening the pushrod attaching the rudder pedals to the torque tubes.

Note: Pedal angle adjustment must be complete prior to re-installing the access panels.

Note: Pedal angle check/adjustment is required any time rudder rigging is performed.

(a) Jack and level the airplane (refer to Chapter 7-10 and 8-20).

(b) Remove the crew seats (refer to Chapter 25-10).

(c) Remove the flight compartment carpet and rudder pedal boot (refer to Chapter 25-10).

(d) Remove the flight compartment floor panels to access the rudder pedals and bellcrank (refer to Chapter 53-20).

(e) Install the rig pin in the rudder bellcrank.

(f) Loosen the jam nuts on the rudder pushrod rod ends.

(g) Zero a digital inclinometer on the aircraft leveling surface, refer to Chapter 8-20.

(h) Adjust each pushrod length to set the pedal angle to 81° +/-1°. Verify the angle of the pedal are with the digital inclinometer.

(i) Maker sure threads are visible in the pushrod witness hole.

(j) Torque and safety the jam nuts on the rudder pushrods.

(k) Remove the rigging pin from the rudder bellcrank.

(l) Install the floor panels (refer to Chapter 53-20) and carpet (refer to Chapter 25-10).

(m) Lower the airplane and remove the jacks (refer to Chapter 7-10).

Figure 27-20.5: Rudder Pedals (Sheet 1 of 2)

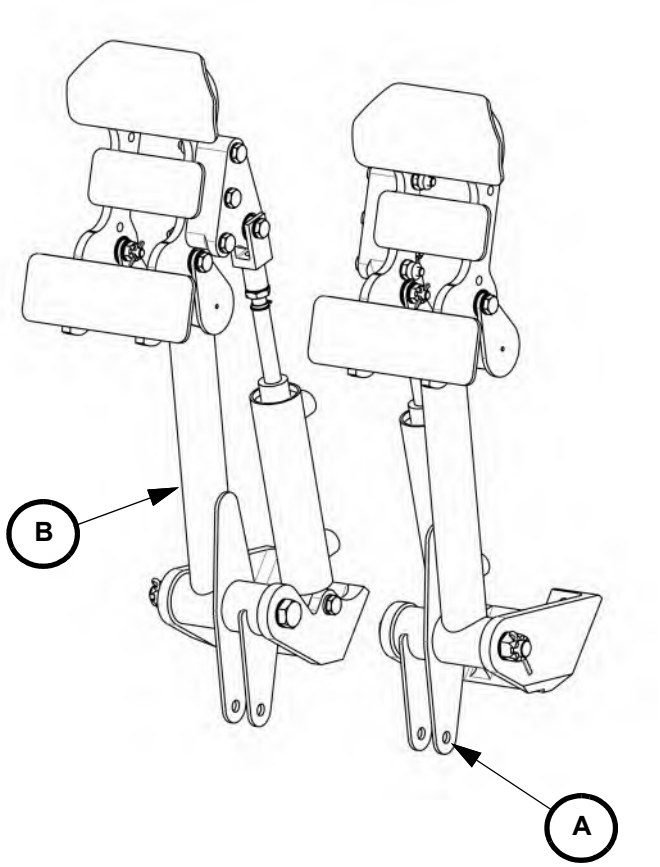

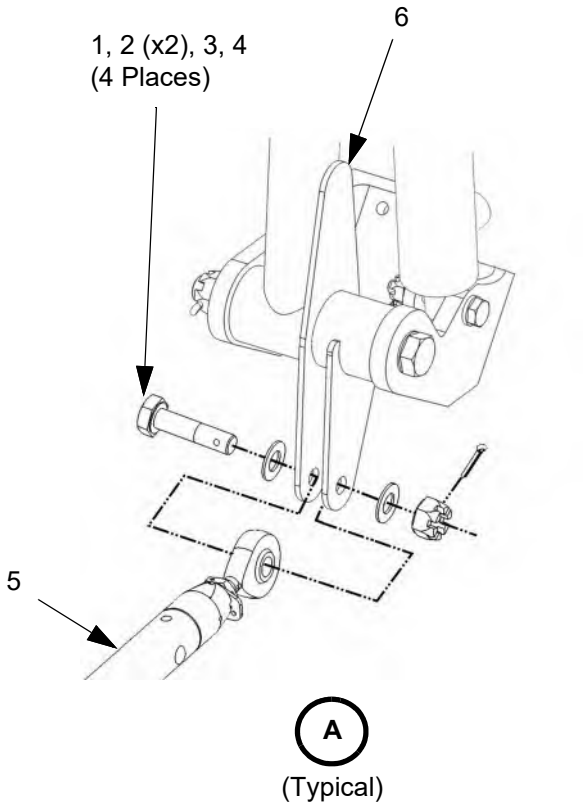

LEGEND

1. Bolt
2. Washer
3. Nut
4. Cotter Pin
5. Pushrod
6. Rudder Pedal

Figure 27-20.5: Rudder Pedals (Sheet 2 of 2)

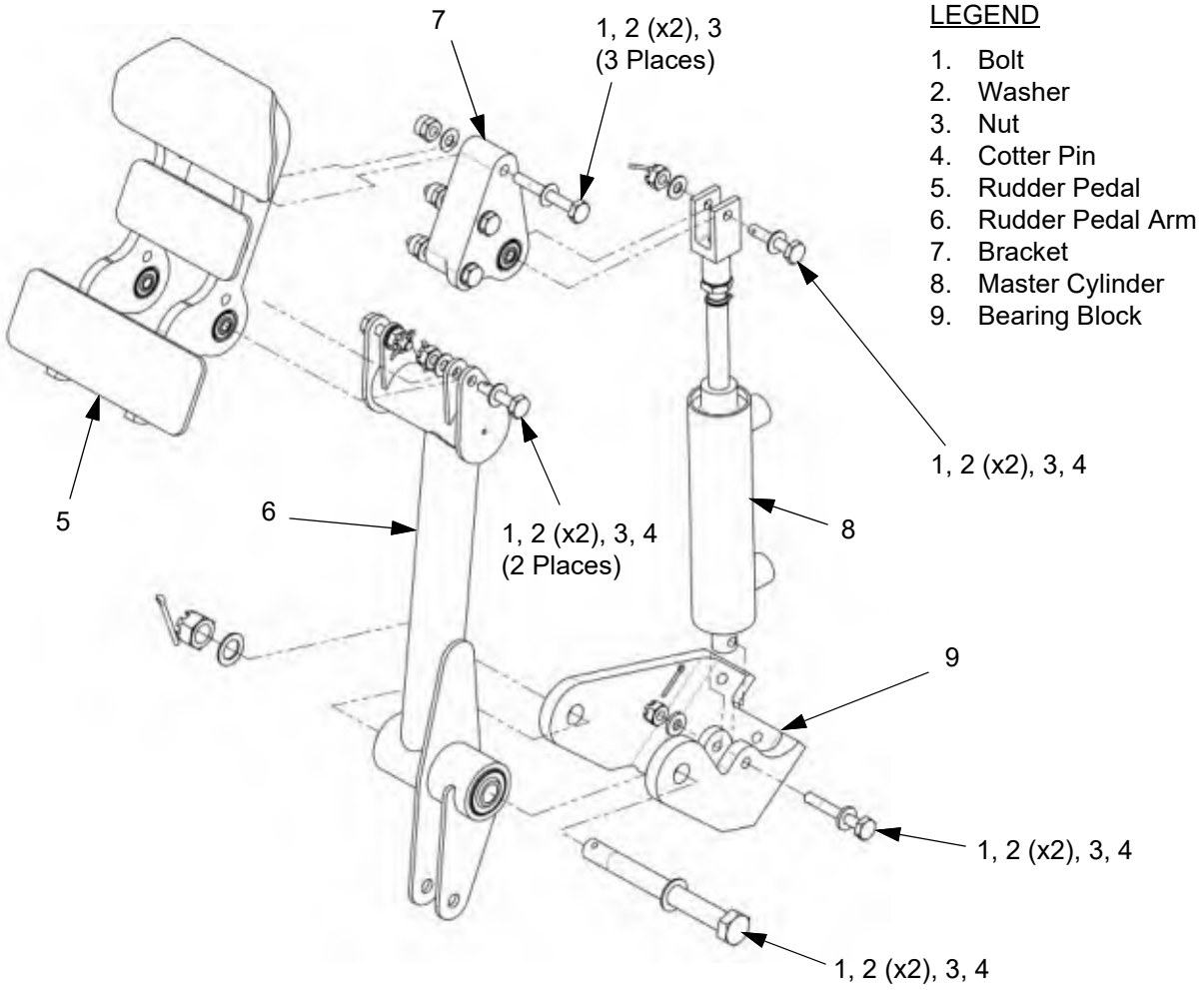

Left pedal shown, right pedal is opposite.

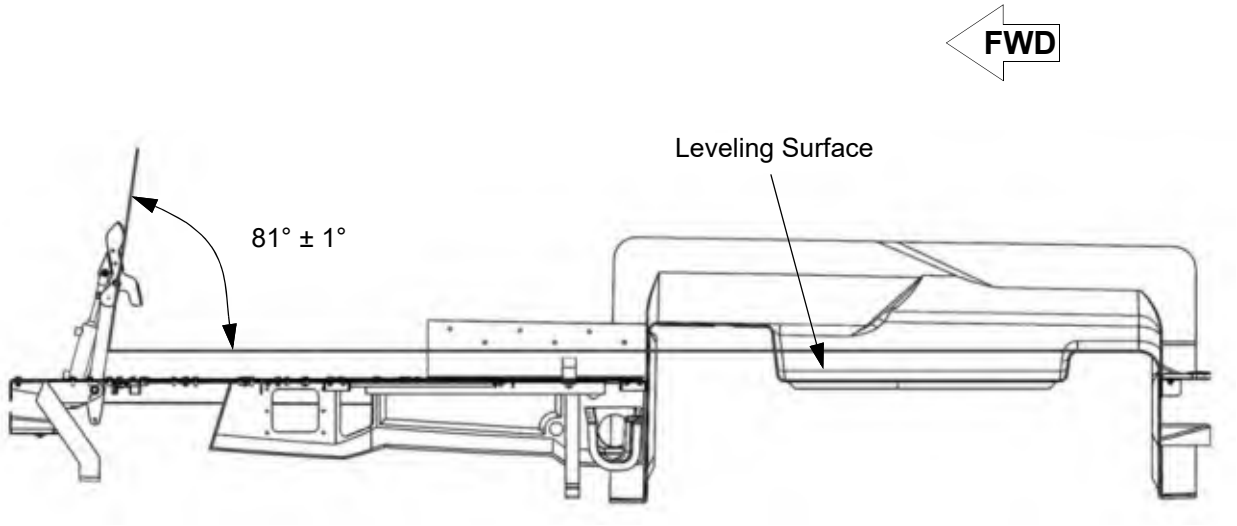

Rudder Pedal Angle

F. Rudder Bellcrank

(1) Removal

(a) Remove the crew seats and carpet (refer to Chapter 25-10).

(b) Remove access panel 3L (refer to Chapter 6). For aircraft SN: K014, K086 and on, disconnect the Brake Servo Assembly for access to the bellcrank (refer to Chapter 32-40).

Note: Removal of the Brake Servo Assembly is not required. Carefully positioning it to allow access is permitted.

(c) Disconnect the pushrods from the bellcrank.

(d) Remove the bolts, washers, nut, and cotter pin attaching the bellcrank to the bracket.

(e) Remove the bellcrank.

(2) Installation

(a) Put the bellcrank in the bracket.

(b) Install the bolt, washers, nut, and cotter pin that attach the bellcrank to the bracket.

(c) Connect the pushrods to the bellcrank.

(d) Ensure the rudder is correctly rigged. Refer to Section 27-20. 2. K. Rudder Rigging and Adjustment

(e) Final torque the adjustable stop nut after final rigging then safety wire both the nut and the adjustable stop to the bracket flange.

(f) Install the access panel (refer to Chapter 6), crew seats and carpet (refer to Chapter 25-10). For aircraft SN: K014, K086 and on, install the Brake Servo Assembly (refer to Chapter 32-40).

G. Rudder Limiter

The rudder limiter is a solenoid powered rod that limits rudder travel by restricting the travel of the rudder bellcrank. When the airplane is airborne (Weight on Wheels switch closed) and the engine is at greater than 20% power, rudder travel is limited to 5.5 to 6.5° to the left and unlimited (18° to 19.5°) to the right.

(1) Removal

(a) Set the BATT 1 and BATT 2 switches to off.

(b) Pull the RUDDER LIMITER circuit breaker.

(c) Remove the crew carpet (refer to Chapter 25-10).

(d) Remove access panel 3L (refer to Chapter 6). For aircraft SN: K014, K086 and on, disconnect the Brake Servo Assembly for access to the bellcrank (refer to Chapter 32-40).

Note: Removal of the Brake Servo Assembly is not required. Carefully positioning it to allow access is permitted.

(e) Disconnect the wiring harness from the rudder limiter.

(f) Remove the bolts, washers, and nuts attaching the rudder limiter to the bracket.

(g) Remove the rudder limiter.

(2) Installation

(a) Put the rudder limiter in position on the bracket.

(b) Attach the rudder limiter to the bracket using bolts, washers, and nuts.

(c) Torque the nuts to 100 in-lbs.

(d) Connect the wiring harness to the rudder limiter.

(e) Install the access panel (refer to Chapter 6), crew seats and carpet (refer to Chapter 25-10). For aircraft SN: K014, K086 and on, install the Brake Servo Assembly (refer to Chapter 32-40).

(f) Reset the RUDDER LIMITER circuit breaker.

(g) Do a Functional Test of the Rudder Limiter

(3) Functional Test

(a) Make sure the rudder is rigged correctly. Refer to Section 27-20. 2. K. Rudder Rigging and Adjustment.

(b) Make sure the rudder pedals operate freely and correctly, with no binding through their full range of travel.

Note: The rudder pedals should not make contact with any part of the cockpit before the rudder contacts the end stops.

(c) Set the BATT 1 and BATT 2 switches to ON.

(d) Make sure the rudder limiter completes its self test and the “RUD LIM FAIL” CAS message does not appear.

(e) Pull the RUDDER LIMITER circuit breaker.

(f) Manually push the plunger portion of the rudder limiter in to the engaged position. Verify that the RUD LIM FAIL CAS message comes on.

(g) Release the plunger. Verify that the RUD LIM FAIL CAS message goes out.

(h) Reset the RUDDER LIMITER circuit breaker. There should be no effect.

(i) Test the weight-on-wheels and engine torque inputs (Method 1):

(i) Pull the SPS COMP 1A, SPS COMP 1B, SPS COMP 2A, SPS COMP 2B, GEAR CONTROL, IGNITER, L PITOT HEAT, L PITOT HT CTRL, L STALL HEAT, R STALL HEAT, R PITOT HEAT, R PITOT HT CTRL, and PUSHER circuit breakers.

(ii) Remove the upper cowling (refer to 71-10).

(iii) Disconnect the high side line from the differential pressure transducer (refer to Figure 27-20.6: Rudder Bellcrank and Rudder Limiter).

(iv) Using a calibrated pressure regulator that reads in 1 psi increments, connect a dry compressed air source to the differential pressure transducer high side fitting.

(v) Slowly increase the air pressure until the torque indication on the MFD is greater than 20%.

CAUTION: Do not exceed 50 psi input to the differential pressure transducer.

Note: Approximately 9 psi should equal 20% torque indication.

(vi) Set the right weight-on-wheels switch to the in-the-air mode. Make sure the rudder limiter engages.

(vii) Adjust the pressure regulator to drop the torque indication on the MFD to 20% or less. Make sure the rudder limiter disengages.

(viii) Slowly increase the air pressure until the torque indication on the MFD is greater than 20%. Make sure the rudder limiter engages.

(ix) Set the right weight-on-wheels switch to the on-the-ground mode. Make sure the rudder limiter disengages.

(x) Set the regulator to 0 psi.

(xi) Reconnect the high side line to the differential pressure transducer.

(xii) Do a leak check and operational check of the differential pressure transducer.

(xiii) Reinstall the upper cowling (refer to 71-10).

(j) Test the weight-on-wheels and engine torque inputs (Method 2):

(i) Put the airplane in an appropriate run-up area.

CAUTION: Make sure the landing gear handle is in the down position and all three landing gear have green down and locked indications.

(ii) Pull the SPS COMP 1A, SPS COMP 1B, SPS COMP 2A, SPS COMP 2B, GEAR CONTROL, L PITOT HEAT, L PITOT HT CTRL, L STALL HEAT, R STALL HEAT, R PITOT HEAT, R PITOT HT CTRL, and PUSHER circuit breakers.

(iii) Start the engine (refer to chapter 71-00 or the latest revision of the AFM).

(iv) Slowly increase power until the torque indication on the MFD is greater than 20%.

(v) Set the right weight-on-wheels switch to the in-the-air mode. Make sure the rudder limiter engages.

(vi) Reduce power until the torque indication is 20% or less. Make sure the rudder limiter disengages.

(vii) Slowly increase power until the torque indication on the MFD is greater than 20%. Make sure the rudder limiter engages.

(viii) Set the right weight-on-wheels switch to the on-the-ground mode. Make sure the rudder limiter disengages.

(ix) Shut down the engine (refer to chapter 71-00 or the latest revision of the AFM).

(k) Reset the SPS COMP 1A, SPS COMP 1B, SPS COMP 2A, SPS COMP 2B, GEAR CONTROL, IGNITER, L PITOT HEAT, L PITOT HT CTRL, L STALL HEAT, R STALL HEAT, R PITOT HEAT, R PITOT HT CTRL, and PUSHER circuit breakers.

(l) Set the BATT 1 and BATT 2 switches to OFF.

(m) Install access panel 3L and the crew carpet and seats (refer to Chapter 25-10). For SN: K014, K086 and on, install the brake servo and chain guard (refer to Chapter 32-40)

(4) Lubricate the Rudder Limiter

(a) Remove the crew carpet and seats (refer to Chapter 25-10).

(b) Remove access panel 3L (refer to Chapter 6). For SN: K014, K086 and on, detach the brake servo (refer to Chapter 32-40)

Note: Removal of the Brake Servo Assembly is not required. Carefully positioning it to allow access is permitted.

(c) Clean the rudder limiter solenoid rod and housing with isopropyl alcohol and a lint free cloth.

(d) Using LPS Dry Film PTFE Lubricant, lubricate the rudder limiter solenoid rod along the entire length of the rod and around the opening to the solenoid housing. Manually extended the solenoid to access the whole length of the solenoid rod.

(e) Install access panel 3L (refer to Chapter 6). For SN: K014, K086 and on, install the brake servo (refer to Chapter 32-40). Install the crew carpet and seats (refer to Chapter 25-10).

Figure 27-20.6: Rudder Bellcrank and Rudder Limiter

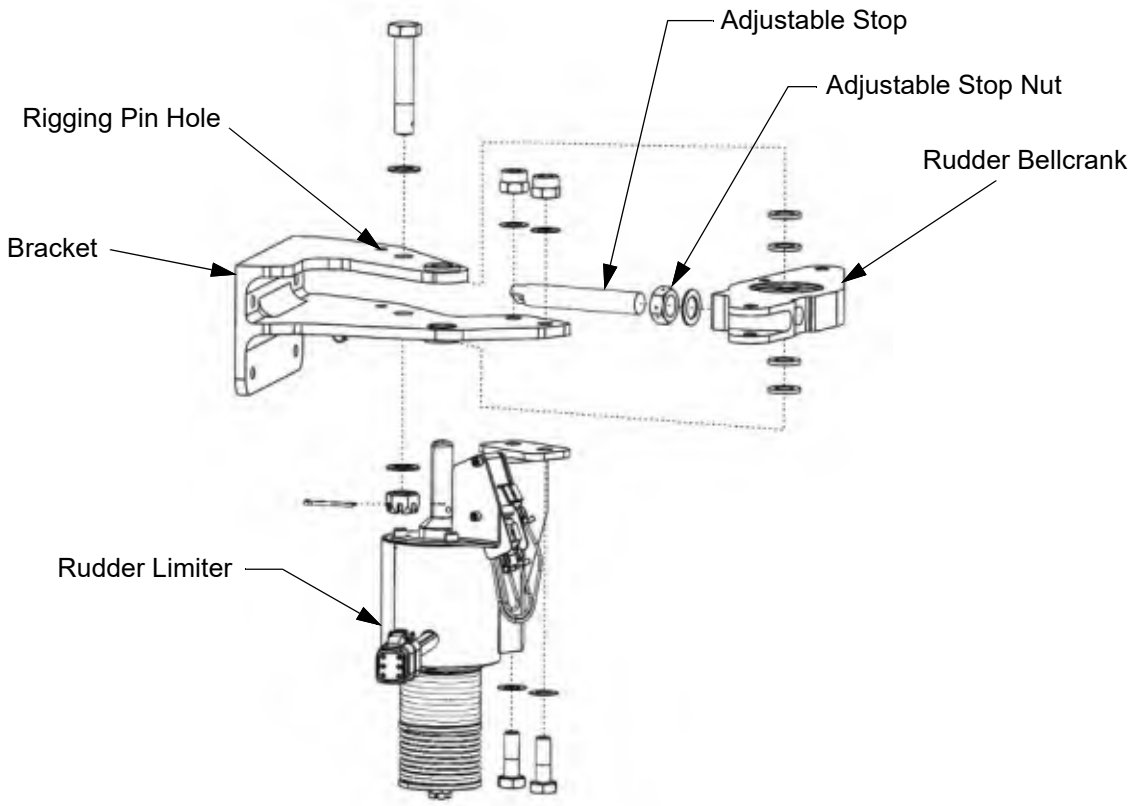

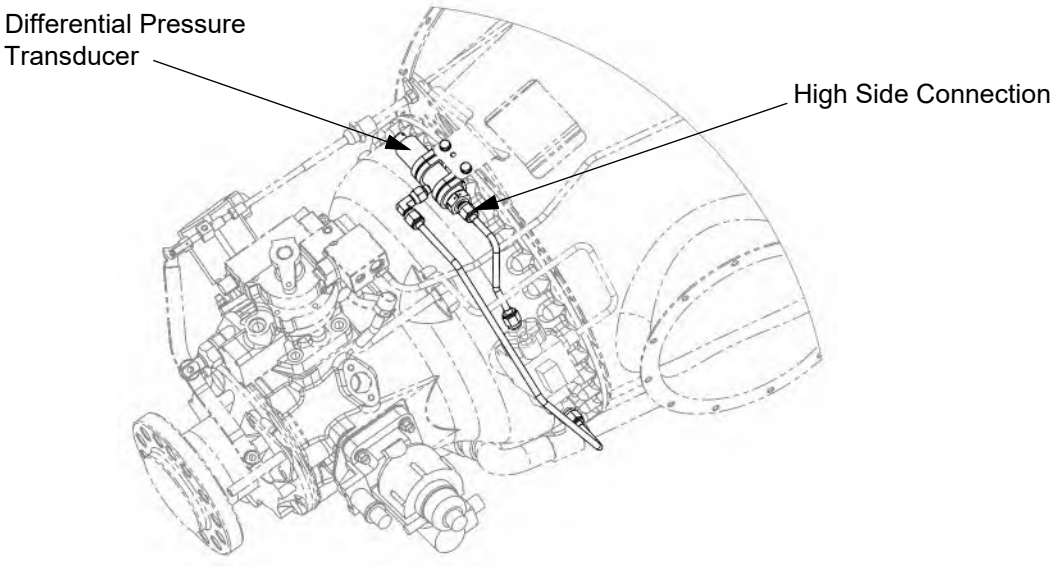

Differential Pressure Transducer

H. Torque Tubes

(1) Removal

(a) Remove the crew carpet (refer to Chapter 25-10).

(b) Remove access panels 2L, 3L, 2R, 2L (refer to Chapter 6), and the floor panel between the pilot and copilot seats (refer to Chapter 53-20). For SN: K014, K086 and on, detach the brake servo (refer to Chapter 32-40)

Note: Removal of the Brake Servo Assembly is not required. Carefully positioning it to allow access is permitted.

(c) Disconnect the push pull rods from the torque tubes.

(d) Loosen the tension in the rudder cables using the turnbuckles.

(e) Disconnect the rudder cables from the torque tubes.

(f) Note the orientation of the torque tubes.

Note: The torque tubes have normal and reverse thread rod end bearings inserted and the torque tubes must be installed the same way they were removed.

(g) Remove the torque tube bearing block.

Note: Note the bevel orientation for installation.

(h) Remove the cotter pins, nuts, and washers that attach the torque tubes to the torque tube brackets on the left and right outboard ribs of the fuselage.

(i) Remove either the left or right torque tube bracket as necessary.

(j) Remove the torque tubes.

(2) Installation

(a) Put the torque tubes into the fuselage in their approximate locations.

Note: Make sure they are oriented so the cables and push pull rods align with their associated horn.

(b) Insert one end of the torque tubes into the bracket installed in the fuselage.

(c) Insert the other end of the torque tubes into the opposite bracket.

(d) Attach the bracket to the outboard rib using bolts, washers, and nuts.

(e) Attach the torque tubes using washers, nuts, and cotter pins.

(f) Install the bearing blocks with the bevel oriented as previously noted.

(g) Re-connect the push pull rods to the torque tubes. Ensure rudder pedals are properly aligned (refer to Section 27-20. 2. (3) Pedal Angle Adjustment).

(h) Insert the rig pin in the bellcrank.

(i) Re-connect the rudder cables to the torque tubes.

(j) Ensure the rudder is correctly rigged. Refer to Section 27-20. 2. K. Rudder Rigging and Adjustment.

(k) Install the access panels (refer to Chapter 6), floor panel (refer to Chapter 53-20), and carpet (refer to Chapter 25-10). For SN: K014, K086 and on, install the brake servo (refer to Chapter 32-40)

Figure 27-20.7: Torque Tubes

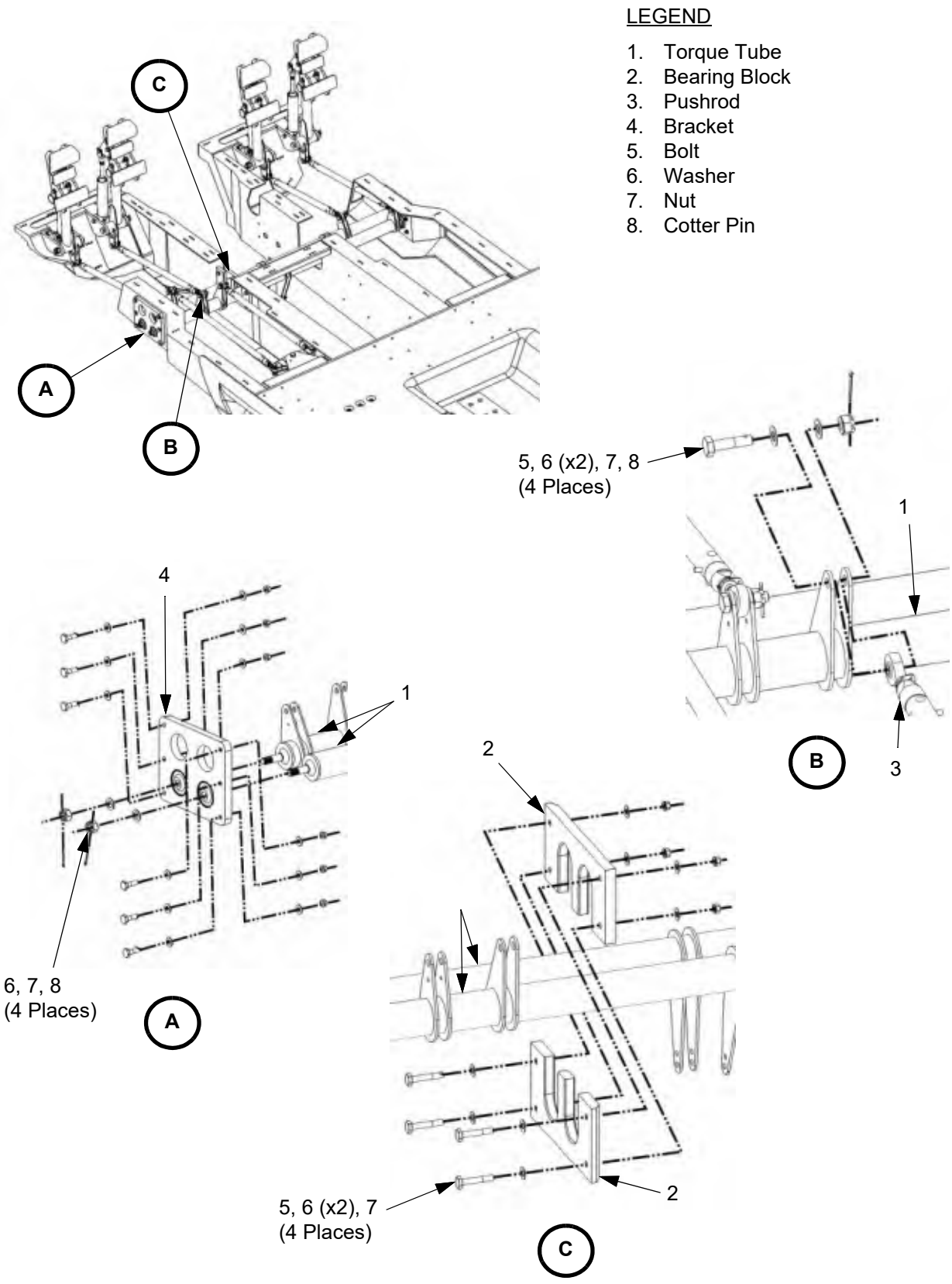

I. Trim Tab

(1) Removal

(a) Set the BATT 1 and BATT 2 switches to off.

(b) Open the RUD TRIM circuit breaker.

(c) Disconnect external electrical power from the airplane (refer to Chapter 24-40).

(d) Remove the bolts, washers, nuts, and cotter pins that attach the trim tab actuator arms to the trim tab horns.

CAUTION: Rotating the actuator pushrods with the trim tab disconnected will change the rigging of the trim tab.

(e) Remove the screws attaching the trim tab to the rudder then remove the trim tab from the airplane.

(2) Installation

(a) Put the rudder trim tab in position and install the screws that attach it to the rudder.

(b) Install the bolts, washers, nuts, and cotter pins that attach the trim tab actuator to the trim tab horns.

(c) Close the RUD TRIM circuit breaker.

(d) Verify the trim tab is properly rigged, refer to Section 27-20. 2. M. Rudder Trim Adjustment.

(e) Do the rudder trim tab Operational Check.

(3) Operational Check

(a) Make sure the rudder trim tab moves smoothly through its full range of travel.

Figure 27-20.8: Trim Tab

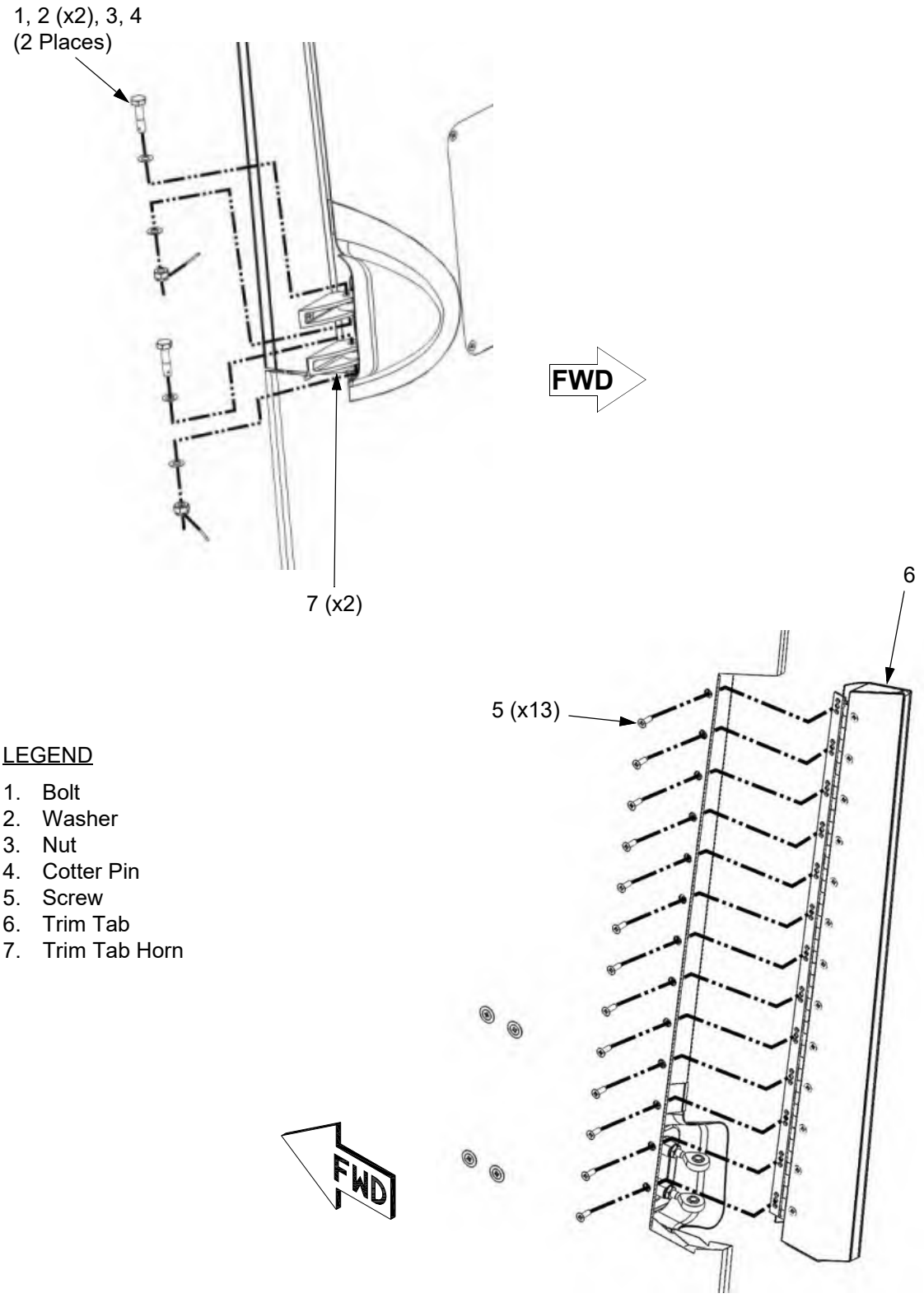

LEGEND

1. Bolt
2. Washer
3. Nut
4. Cotter Pin
5. Screw
6. Trim Tab
7. Trim Tab Horn

J. Trim Tab Actuator

(1) Removal

(a) Set the BATT 1 and BATT 2 switches to off

(b) Open the RUD TRIM circuit breaker.

(c) Disconnect external electrical power from the airplane (refer to Chapter 24-40).

(d) Remove the bolts, washers, nuts, and cotter pins that attach the trim tab actuator to the trim tab horns.

(e) Remove the rudder trim tab actuator access panel.

(f) Remove the screws, washers, and nuts that attach the actuator mounting brackets to the rudder.

(g) Carefully move the actuator forward to access the wiring harness and disconnect the electrical connector.

(h) Remove the actuator from the rudder.

(i) If necessary, remove the cotter pins, nuts, and washers that attach the brackets to the actuator.

(2) Installation

(a) If removed, install the brackets on the trim tab actuator with the nuts, washers, and cotter pins.

(b) Put the actuator in position in the rudder.

(c) Connect the electrical connector.

(d) Install the screws, washers, and nuts that attach the actuator mounting brackets to the rudder.

(e) Install the bolts, washers, nuts, and cotter pins that attach the trim tab actuator to the trim tab horns.

(f) Do the Rudder Trim DAT Calibration, refer to Chapter 39-10.2.H. (SN: K003-K085) or refer to Chapter 39-11.2.H. (SN: K086 and On).

(g) Do the Trim Tab Actuator Operational Check.

(h) Verify correct operation of the rudder trim system. Refer to Section 27-20. 2. M. Rudder Trim Adjustment.

(3) Operational Check

(a) Open the RUD TRIM circuit breaker.

(b) Push the RUDDER TRIM switch on both yokes. There should be no motion at the rudder trim tab.

(c) Reset the RUD TRIM circuit breaker.

(d) On the pilot side yoke push the RUDDER TRIM switch right.

(i) Make sure the trailing edge of the rudder trim tab moves left.

(e) On the pilot side yoke push the RUDDER TRIM switch left.

(i) Make sure the trailing edge of rudder trim tab moves right.

(f) Repeat steps (d) and (e) for the copilot's yoke.

(g) Using either the pilot or copilot side yoke, push and hold the RUDDER TRIM switch then ensure the trim tab is in motion.

(h) With the trim tab in motion push the AP/TRIM DISC switch for less than 1 second.

(i) Make sure the trim tab stops moving immediately.

(j) Push and hold the AP/TRIM DISC switch.

(k) Make sure the TRIM DISC CAS message displays approximately 1.25 seconds after AP/TRIM DISC pushed.

(l) Push the RUDDER TRIM switch on both yokes. there should be no motion at the rudder trim tab.

(m) Push the TRIM RESET switch located on the pilot side yoke.

(n) Make sure the TRIM DISC CAS message extinguishes.

(o) Push the RUDDER TRIM switch on both yokes. Rudder trim tab motion should be restored.

Figure 27-20.6: Trim Tab Actuator

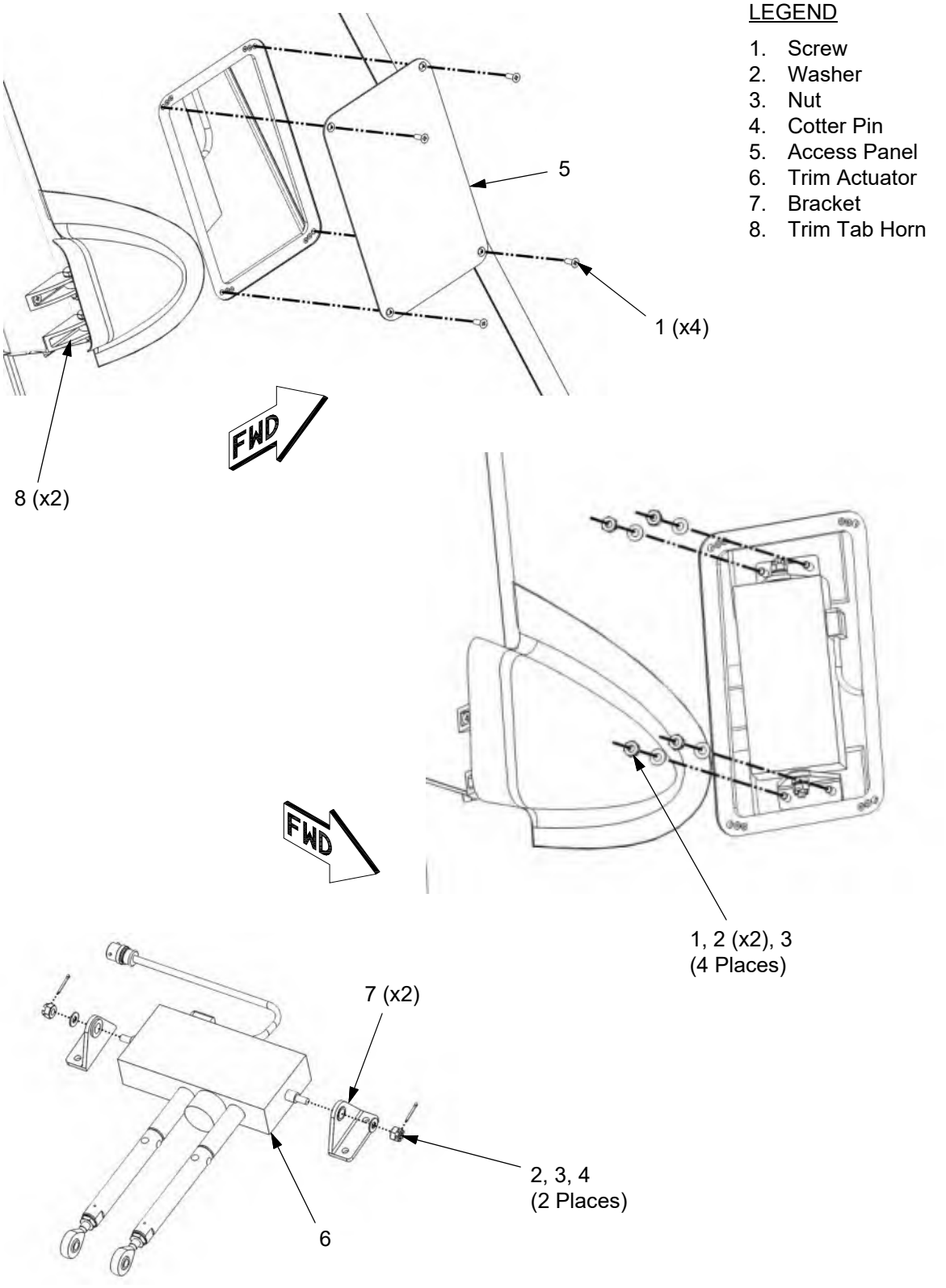

K. Rudder Rigging and Adjustment

Note: To check the rudder system with the nose wheel steering engaged the nose wheel must be lifted off the ground or a grease plate placed under the nose wheel tire.

Note: Rudder pedal angle, pedal alignment, cable tension, and rudder neutral and travel adjustment steps can be performed independently. If making adjustments independently, make sure all other rigging criteria are still met.

(1) Check cable tensions, rudder neutral, and deflections before proceeding.

(2) Remove access panel 3L (refer to Chapter 6). For aircraft SN: K014, K086 and on, disconnect the Brake Servo Assembly for access to the bellcrank (refer to Chapter 32-40).

Note: Removal of the Brake Servo Assembly is not required. Carefully positioning it to allow access is permitted.

(3) Loosen the jam nuts on all rudder pedal and bellcrank pushrods.

(4) Pin the rudder bellcrank in the neutral position.

(5) Using a suitable fixture, set the rudder in its neutral position by clamping the rudder counterweight flush to the vertical stabilizer.

Note: Don't force the rudder into neutral with the fixture. Loosen the cables to allow the rudder to move freely to neutral without binding the rig pin in the bellcrank.

(6) Adjust the bellcrank pushrods so the cable attach horns on the torque tubes are vertical (pointed down, 90° from horizontal) and aligned with each other.

(7) Set the rudder neutral position by lengthening/shortening the left and right rudder cables with the turnbuckles, maintaining the cable tension specified in Chapter 27-00. Make sure the rig pin in the bellcrank maintains a slip fit.

Note: The neutral position is based on the chord line of the vertical stabilizer within 3/16".

(8) Check/adjust the rudder pedal angle as follows:

(a) Loosen the jam nuts on the rudder pushrod rod ends.

(b) Zero a digital inclinometer on the aircraft leveling surface, refer to Chapter 8-20.

(c) Adjust each pushrod length to set the pedal angle to 81° +/-1°. Verify the angle of the pedal are with the digital inclinometer.

(d) Maker sure threads are visible in the pushrod witness hole.

(9) Torque and safety the jam nuts on the rudder pushrods.

(10) Torque and safety the jam nuts on the bellcrank pushrods.

(11) Safety the turnbuckles.

(12) Check/Adjust the nose wheel steering alignment (refer to Chapter 32-50).

Note: Before removing the rig pin recheck for binding. Binding on the rigging pin indicates unbalanced cable tension or pushrod lengths.

(13) Remove the rig pin from the rudder bellcrank.

(14) Remove the rudder neutral fixture.

(15) Verify the deflection angles of the rudder as follows:

(a) Level the airplane longitudinally and laterally.

(b) Attach a plumb bob to the lower joggle of the rudder trim tab cutout centering the plumb bob line on the trailing edge.

Note: The plumb bob should almost contact the floor.

(c) Tape a white piece of 11” x 17" paper on the floor beneath the plumb bob so that the rudder deflections can be measured on the paper.

(d) With the rudder in neutral, mark the center location of the plumb bob on the paper.

(e) From the cockpit, press the rudder all the way one direction, ensure the rudder is hitting its stops and mark the location of the plumb bob. Repeat for the opposite direction and then return rudder to center.

(f) Manually extend the rudder limiter solenoid.

Note: The rudder solenoid can also be extended by turning the BATT 1 and BATT 2 switches on. The rudder limiter solenoid will extend during its self-test but retract once the self-test is complete. The next step will need to be performed while the solenoid is extended.

(g) With the rudder limiter engaged, depress the left rudder pedal until it contacts the rudder limiter pin. Mark the plumb bob location at the limiter stop.

(h) Release the rudder pedal.

(i) Release the rudder limiter solenoid.

(j) Using a calibrated measuring device, measure between the centered mark and the full left and right deflections.

(i) Right limit (18° - 19.5°) is 5.9" - 6.4" from center.

(ii) Left limit (18° - 19°) is 5.9" - 6.3" from center.

(k) Using a calibrated measuring device, measure between the center mark and the rudder limited mark.

Note: Rudder limiter limit (5.5° - 6.5°) is 1.8" - 2.2" from center.

(l) Adjust the rudder deflections as follows:

(i) Remove the pin from the stop to be adjusted.

(ii) Rotate the stop in the desired direction, and install the pin.

Note: There are 9 possible positions for each stop.

(iii) Check the deflection angle, and re-adjust the stops as needed.

(iv) Install a new cotter pin in the pin.

(m) Adjust the rudder limiter deflection as follows:

(i) Loosen the jam nut on the bellcrank adjustable stop.

(ii) Adjust the stop in or out as need to change the rudder limiter stop position.

(iii) Check the deflection angle, and re-adjust the stop as needed.

(iv) Torque the jam nut and install safety wire.

Figure 27-20.9: Rudder Rigging and Adjustment

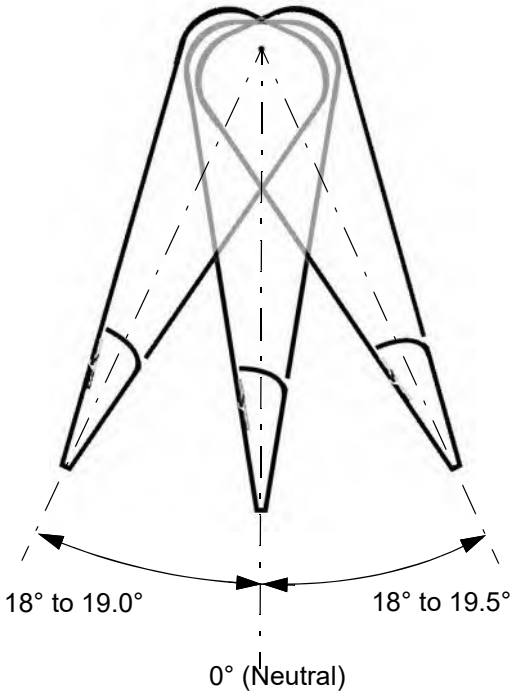

Rudder Deflection Angles

LEGEND

1. Rudder Horn
2. Stop
3. Bolt
4. Pin
5. Washer
6. Nut
7. Cotter Pin

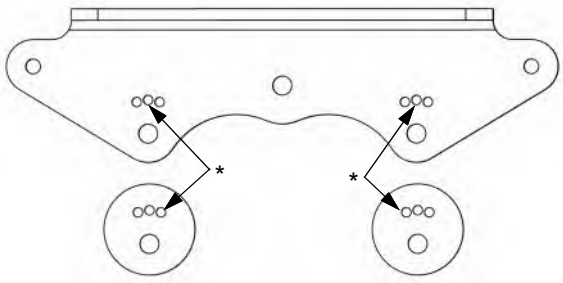

Rudder Stop Adjustment

* Initial rigging position. With the inboard hole of the stops aligned with the center holes on the rudder horn, the rudder travel should be approximately 18° in both directions.

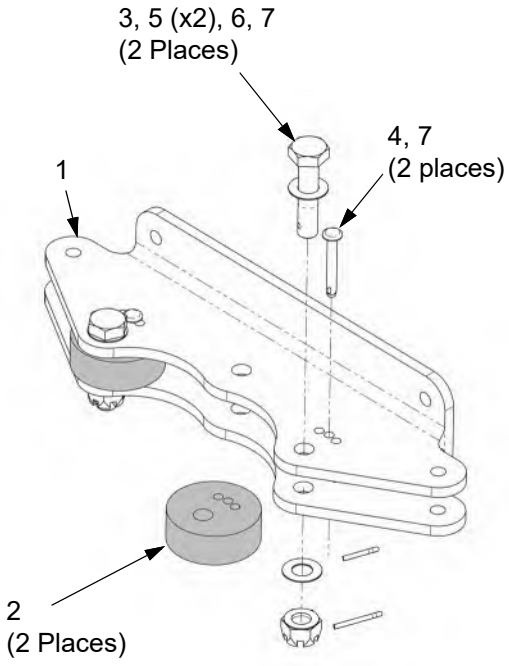

Rudder Horn and Stops

Note: The rudder pedals should not make contact with any part of the cockpit before the system contacts the end stops at the rudder.

(16) Perform a functional check of the rudder and steering control system.
   (a) Operate the rudder and steering control system from the flight deck controls.
   (b) Confirm the rudder and steering control system is free from jamming, binding, or excessive friction.
   (c) Confirm the rudder moves in the correct direction per pedal input. The left pedal must result in the rudder moving left. The right pedal must result in the rudder moving right.
   (d) Activate rudder limiter and verify deflection angle.
(17) Confirm proper thread engagement on all rod ends and turnbuckles.
(18) Make sure all jam nuts, turnbuckles, and fasteners are safetied.

L. Neutral Rudder Position Adjustment

(1) Put the airplane in a climate controlled hangar.

Note: Let the temperature of the airplane stabilize for a minimum of 3 hours before doing any inspection, rigging, or adjustments.

(2) Jack and level the airplane (refer to Chapter 7-10 and 8-20).
(3) Remove the flight compartment carpet (refer to Chapter 25-10).
(4) Remove access panel 3L (refer to chapter 6). For aircraft SN: K014, K086 and on, disconnect the Brake Servo Assembly for access to the bellcrank (refer to Chapter 32-40).

Note: Removal of the Brake Servo Assembly is not required. Carefully positioning it to allow access in permitted.and the fire extinguisher door and floor panel (refer to Chapter 6 and 53-20).

(5) Remove the fire extinguisher and tray (refer to Chapter 26-20).
(6) Install a rig pin in the rudder bellcrank.
(7) Make sure all rudder pedals are angled correctly:
   (a) The angle between the aircrafts leveling surface and the four pedal arm assemblies should be (81°+/-1°).
   (b) Adjust individual push pull rods from the rudder torque tube assembly to the forward pedal pivot bracket to correct pedal bracket angle.
(8) Adjust the cable turnbuckles to bring the rudder to neutral.
   (a) The trailing edge of the rudder should align with the chordline of the vertical stabilizer, +/- 3/16”.
(9) Make sure the cable tension are within tolerances (refer to Chapter 27-00).
(10) Install turnbuckle safety clips or safety wire.
(11) Remove the rig pin from the rudder bellcrank.

(12) Install the fire extinguisher and tray (refer to Chapter 26-20).
(13) Install the access panels (refer to Chapter 6) and carpet (refer to Chapter 25-10).
(14) Lower the airplane and remove the jacks (refer to Chapter 7-10).

Figure 27-20.10: Neutral Rudder Position Adjustment

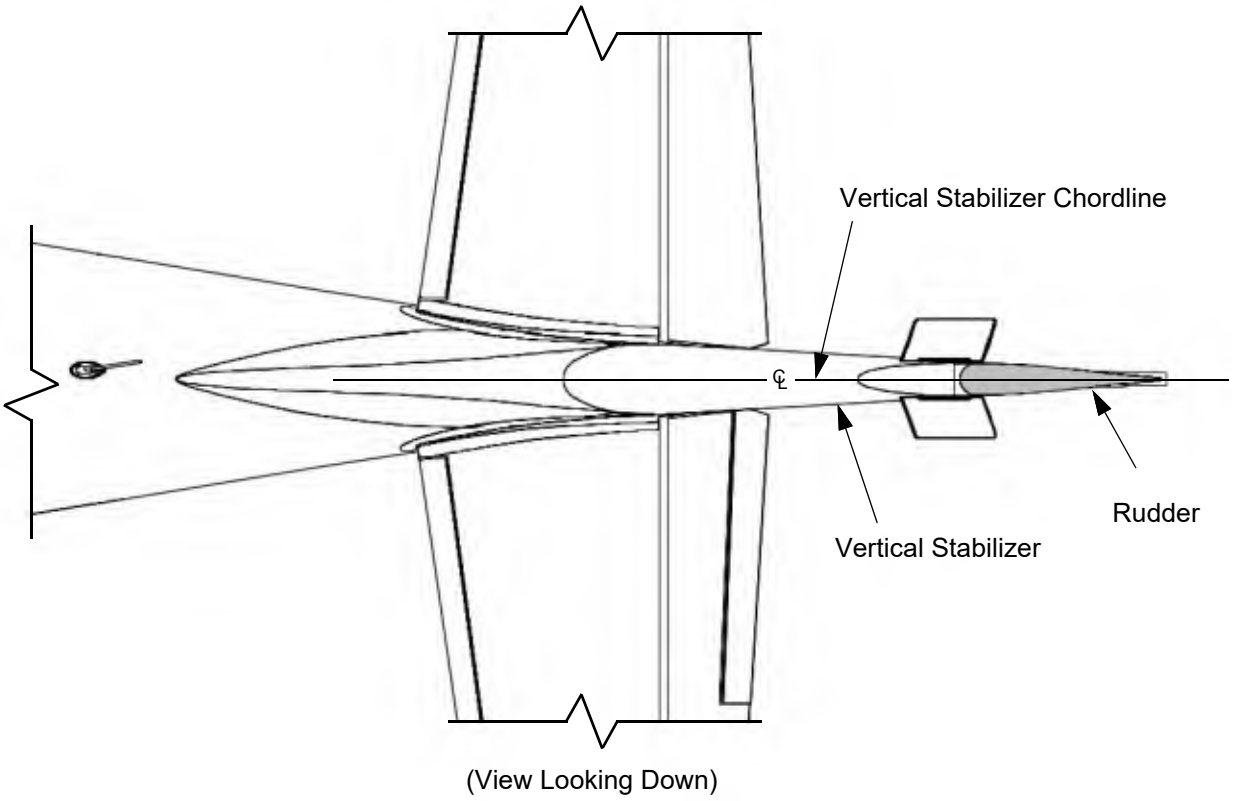

M. Rudder Trim Adjustment

(a) Remove the rudder from the airplane.
(b) Loosen the jam nuts then disconnect the rod ends on the servo actuator arms from the trim tab horns.
(c) Position the trim tab in a neutral position with the rudder skins
(d) Ensure the digital inclinometer is parallel with the center plane of the rudder then set the smart level to zero.
(e) Hold the digital inclinometer on the trim tab skin then rotate the trim tab to the correct left angle deflection. Run the servo rods to their fully extended position then adjust the rod ends until they can be temporarily reattached to the trim tab horns.
(f) Run the servo rods into their fully retracted position then check for correct right angle deflection. If necessary, readjust the rod ends and repeat the process until left and right deflection angle tolerances are achieved.

(g) Fully install the rod end hardware then tighten jam nuts.

(h) Install the rudder onto the airplane.

(i) Operate the rudder trim. Make sure it moves smoothly and without binding to its full travel in both directions.

Figure 27-20.11: Rudder Trim Adjustment

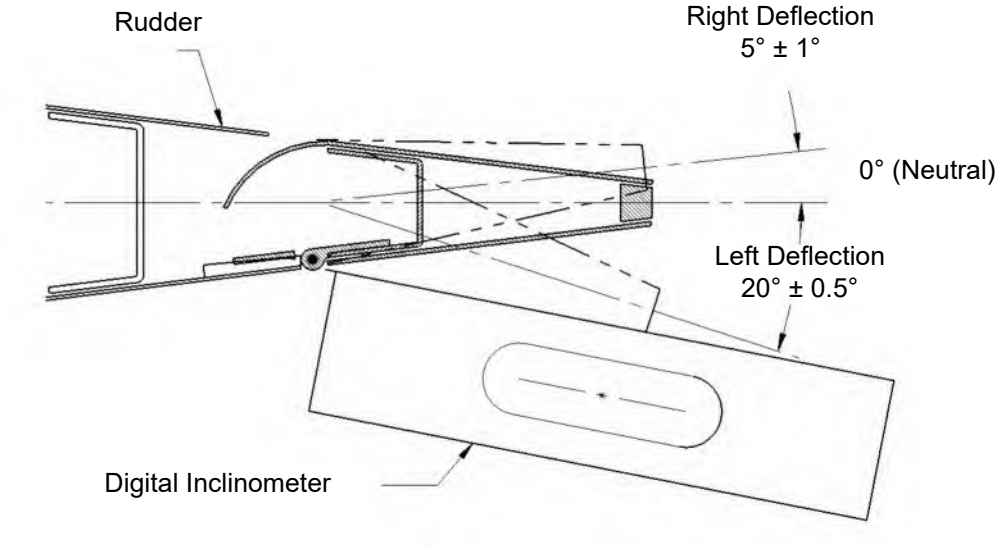

N. Inspection

(1) Remove the pilot and copilot seats (refer to Chapter 25-10).

(2) Remove the crew carpet (refer to Chapter 25-10).

(3) Remove access panels 3LC, 1LE, and 1RE (refer to Chapter 6).

(4) Open the emergency landing gear blowdown compartment and the fire extinguisher compartment.

(5) Remove the pressure bulkhead access panel (refer to Chapter 21-30).

(6) Remove the airplane belly panels (refer to Chapter 57-10).

(7) Verify the rudder control cable tension is as specified in Chapter 27-00.

(8) Verify there is no checking or flat spots on the cables. Cables that are found to be shiny or show wear should be replaced.

Note: Move the cables through their full travel to inspect where the cables contact the pulleys.

Note: Disassembly of the cables to inspect the run inside the cable tubes is not required.

(9) Use a cotton cloth to run over the exposed cable to check for individual cable strand breaks.

(10) Check condition of cable swaged ends.

(11) Verify rudder deflections (18°-19° left and 18°-19.5° right).

(12) Verify rudder trim deflections (20° +/-0.5° left and 5.1° +/-1° down).

(13) Remove the rudder trim tab actuator access panel.

(14) Inspect the trim tab actuator as follows:

(a) Verify no chafing of the wiring harness.

(b) Verify no damage or corrosion on the actuator case.

(c) Verify there is no evidence of grease leaking from the actuator.

(d) Verify the no damage or corrosion on the actuator rods and rod ends.

(15) Verify rudder hinges move freely with no binding through their full range of motion.

(16) Verify no cracks in the hinges.

(17) Verify a 0.020” wire will not pass through the witness hole of all rod ends.

(18) Verify free and correct operation of the rudder control system.

(19) Ensure the rudder pedals operate freely and correctly, with no binding, scraping, jamming, excessive friction, or any other characteristics that may cause unsafe performance of the system. Verify that the full range of motion in the rudder pedals is limited only by properly set rudder stops. The rudder pedals should not make contact with any part of the cockpit before the rudder contacts the end stops.

(20) Verify correct safety wire and cotter pins installation on all fasteners.

(21) Verify turnbuckle safeties are present.

(22) Install the access panels (refer to Chapter 6), floor panel (refer to Chapter 53-20), the pressure bulkhead access panel (refer to Chapter 21-30), and the belly panels (refer to Chapter 57-10).

Note: Remove all foreign object debris before installing the access panels.

(23) Install the carpet and crew seats. Refer to Chapter 25-10.

This Page Intentionally Left Blank

ELEVATOR AND TAB

1. Description

The elevator assembly is attached to the horizontal stabilizer using two hinged brackets and an elevator horn. Cables, pulleys, a torque tube, and a bellcrank assembly are used to control the elevator.

The elevator trim motor is internally mounted in the left side of the elevator and is electrically controlled from the cockpit.

2. Maintenance Practices

A. Elevator Neutral Position

In the neutral position the bisected trailing edge thickness of the elevator coincides with the projected chord line of the horizontal stabilizer within 3/16”.

The deflection between the left and right hand side must be within ± 0.3°. Measure the deflection specifically at the middle hinge and ensure the deflection tool is sitting flat when recording the measurement.

Figure 27-30.1: Elevator Neutral Position

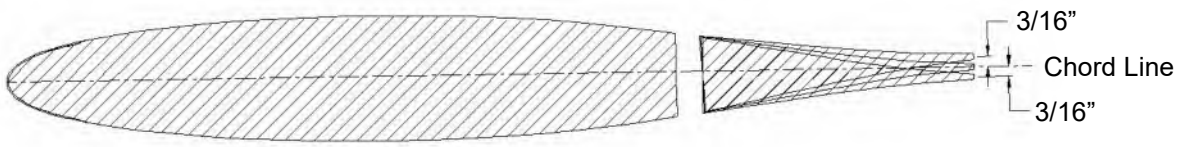

B. Elevator Trim Tab Neutral Position

Trim tab neutral position is shown below.

Figure 27-30.2: Elevator Trim Tab Neutral Position

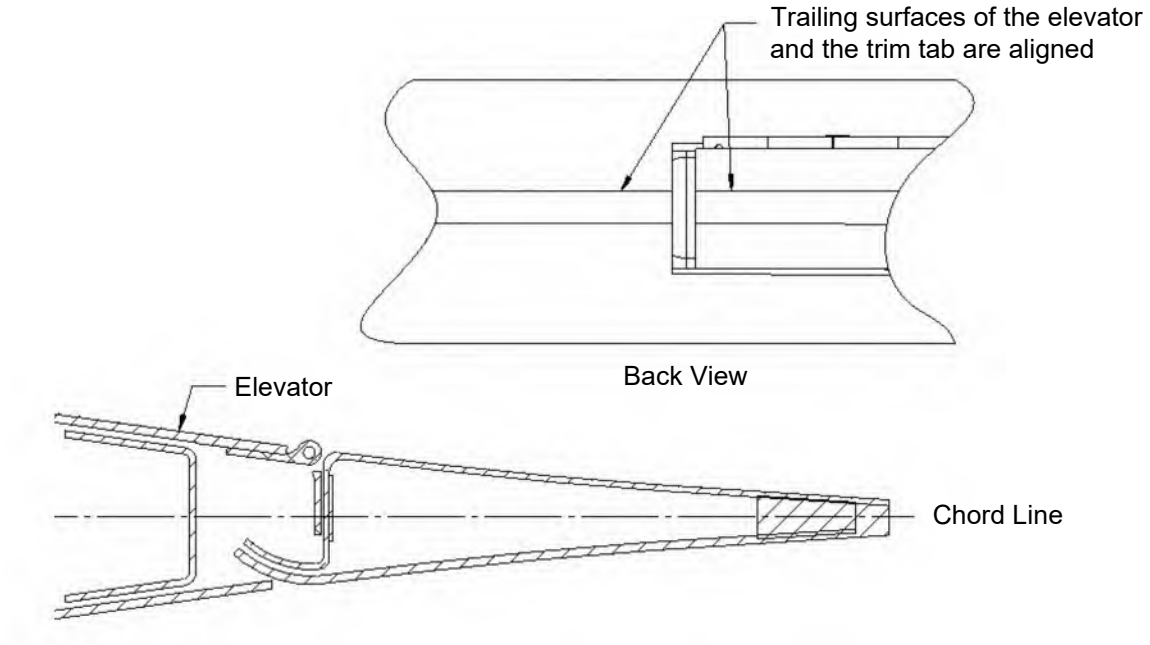

C. Elevator Cables

(1) Removal

(a) Remove the crew seats (refer to Chapter 25-10)

(b) Remove the flight compartment carpet (refer to Chapter 25-10).

(c) Remove access panels 1C, 2C, 1LE, 1RE, and the fire extinguisher door and panel (refer to Chapter 6).

(d) Remove the fire extinguisher and tray (refer to Chapter 26-20).

(e) Remove the pressure bulkhead access panel (refer to Chapter 21-30).

(f) Remove the airplane belly panels (refer to Chapter 57-10).

(g) Remove the MFD (refer to Chapter 34-40).

(h) Remove the elevator sector cover.

(i) Disconnect the cables at the turnbuckles.

(j) Remove screws that attach the cable locks to the elevator sector.

(k) Remove the cable seals at the penetrations through the pressure vessel.

(l) Remove the cable safeties from the pulleys and sector.

(m) Disconnect the cables rod ends from the elevator control arms.

(n) Disconnect the autopilot bridle cable, refer to Chapter 22-10.1.H. for S-Tec, or refer to Chapter 22-11.1.G. for Garmin.

(o) Attach a lead line to one end of the cable then pull the other end of the cable until it is removed from the airplane.

Note: Leave the lead line in place for installation of new cables.

(2) Installation

(a) Carefully route the cable into position using the lead line, and remove the lead line

CAUTION: Make sure the cable is routed correctly on the pulleys and sector.

(b) Install the cable safeties on the pulleys and sector.

(c) Install the cable locks on the sector and install safety wire.

(d) Connect the cable rod ends to the elevator control arms.

(e) Connect the cable ends to the turnbuckle. Tighten the turnbuckle enough to take slack out of the cable.

(f) Install the cable seals.

(g) Adjust the cable tensions and rigging. Refer to Section 27-30. 2. H. Elevator Neutral Adjustment and Section 27-30. 2. I. Elevator Travel Adjustment.

(h) Connect the autopilot bridle cable, refer to Chapter 22-10.1.H. for S-Tec, or refer to Chapter 22-11.1.G. for Garmin.

(i) Install turnbuckle safety clips or safety wire.

(j) Make sure the elevator control system is free from jamming, binding, or excessive friction.

(k) Make sure the elevator moves in the correct direction with yoke input:

(i) Yoke Aft = Elevator Trailing Edge Up

(ii) Yoke Fwd = Elevator Trailing Edge Down

(l) Install the access panels (refer to Chapter 6).

(m) Install the pressure bulkhead access panel (refer to Chapter 21-30)

(n) Install the airplane belly panels.

(o) Install the flight compartment carpet (refer to Chapter 25-10).

(p) Install the crew seats (refer to Chapter 25-10).

Figure 27-30.3: Elevator Cables

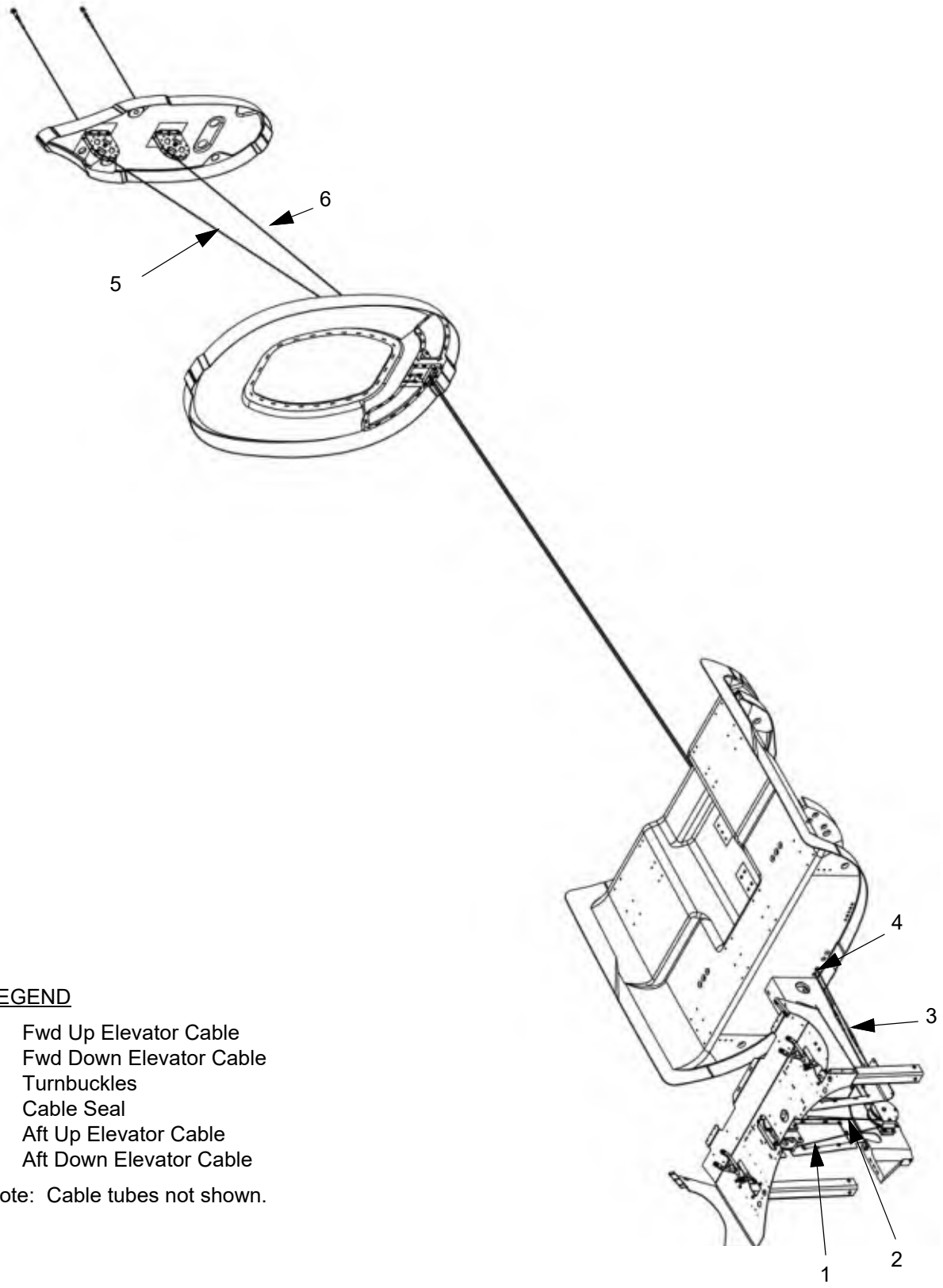

LEGEND

1. Fwd Up Elevator Cable
2. Fwd Down Elevator Cable
3. Turnbuckles
4. Cable Seal
5. Aft Up Elevator Cable
6. Aft Down Elevator Cable

Note: Cable tubes not shown.

D. Elevator Pulleys

(1) Removal - Yoke Pulley

(a) Remove the crew carpet (refer to Chapter 25-10).

(b) Open the emergency landing gear blowdown compartment and the fire extinguisher compartment.

(c) Loosen cable tension using the turnbuckles.

(d) Remove the cable retaining bolts from the pulley.

(e) Remove the nuts, washers, and bolts attaching the pulley to the floor rib then remove the pulley from the airplane.

(2) Installation - Yoke Pulley

(a) Attach the pulley to the floor rib using bolts, washers, and nuts.

(b) Route the elevator cables into the pulleys.

(c) Install the cable retaining bolt.

(d) Ensure the elevator is correctly rigged. Refer to Section 27-30. 2. H. Elevator Neutral Adjustment and Section 27-30. 2. I. Elevator Travel Adjustment.

(e) Install the carpet (refer to Chapter 25-10).

(3) Removal - Rudder and Elevator Pulley Assembly

(a) Remove the crew carpet (refer to Chapter 25-10).

(b) Open the emergency landing gear blowdown compartment and the fire extinguisher compartment.

(c) Remove the airplane belly panels (refer to Chapter 57-10).

(d) Loosen cable tension using the turnbuckles.

(e) Remove the cable retaining bolts from the pulley.

(f) Remove the nuts, washers, and screws attaching the pulley to the shearbox then remove the pulley from the airplane.

(4) Installation - Rudder and Elevator Pulley

(a) Attach the pulley to the shearbox using screws, washers, and nuts.

(b) Route the cables into the pulleys.

(c) Install the cable retaining bolt.

(d) Ensure the elevator is correctly rigged. Refer to Refer to Section 27-30. 2. H. Elevator Neutral Adjustment and Section 27-30. 2. I. Elevator Travel Adjustment.

(e) Install the carpet (refer to Chapter 25-10).

(f) Install the belly panels (refer to Chapter 57-10).

(5) Removal - Shearbox Pulley

(a) Open the emergency landing gear blowdown compartment and the fire extinguisher compartment.

(b) Remove the airplane belly panels refer to Chapter 57-10).

(c) Loosen cable tension using the turnbuckles.

(d) Remove the cable retaining bolt from the pulley.

(e) Remove the nuts, washers, and bolts attaching the pulley to the shearbox then remove the pulley from the airplane.

(6) Installation - Shearbox Pulley

(a) Attach the pulley to the shearbox using bolts, washers, and nuts.

(b) Route the cable into the pulley,

(c) Install the cable retaining bolt.

(d) Ensure the elevator is correctly rigged. Refer to Section 27-30. 2. I. Elevator Travel Adjustment.

(e) Install the carpet (refer to Chapter 25-10).

(f) Install the belly panels (refer to Chapter 57-10).

(7) Removal - Pressure Bulkhead Pulley

(a) Remove the crew carpet (refer to Chapter 25-10).

(b) Open the emergency landing gear blowdown compartment and the fire extinguisher compartment.

(c) Remove the pressure bulkhead access panel (refer to Chapter 21-30).

(d) Loosen cable tension using the turnbuckles.

(e) Remove the cable retaining bolts from the pulley.

(f) Remove the washers and bolts attaching the pulley to the pressure bulkhead then remove the pulley from the airplane.

(8) Installation - Pressure Bulkhead Pulley

(a) Attach the pulley to the pressure bulkhead using bolts and washers.

(b) Route the cable into the pulley.

(c) Install the cable retaining bolt.

(d) Ensure the elevator is correctly rigged. Refer to Section 27-30. 2. I. Elevator Travel Adjustment.

(e) Install the pressure bulkhead access panel (refer to Chapter 21-30).

(f) Install the carpet (refer to Chapter 25-10).

(9) Removal - Rear Bulkhead Pulley

(a) Remove the crew carpet (refer to Chapter 25-10).

(b) Open the emergency landing gear blowdown compartment and the fire extinguisher compartment.

(c) Remove the pressure bulkhead access panel (refer to Chapter 21-30).

(d) Loosen cable tension using the turnbuckles.

(e) Remove the cable retaining bolts from the pulley.

(f) Remove the washers and bolts attaching the pulley to the rear bulkhead then remove the pulley from the airplane.

(10) Installation - Rear Bulkhead Pulley

(a) Attach the pulley to the rear bulkhead using bolts and washers.

(b) Route the cable into the pulley.

(c) Install the cable retaining bolt.

(d) Ensure the elevator is correctly rigged. Refer to Section 27-30. 2. I. Elevator Travel Adjustment.

(e) Install the pressure bulkhead access panel (refer to Chapter 21-30).

(f) Install the carpet (refer to Chapter 25-10).

Figure 27-30.4: Elevator Pulleys (Sheet 1 of 4)

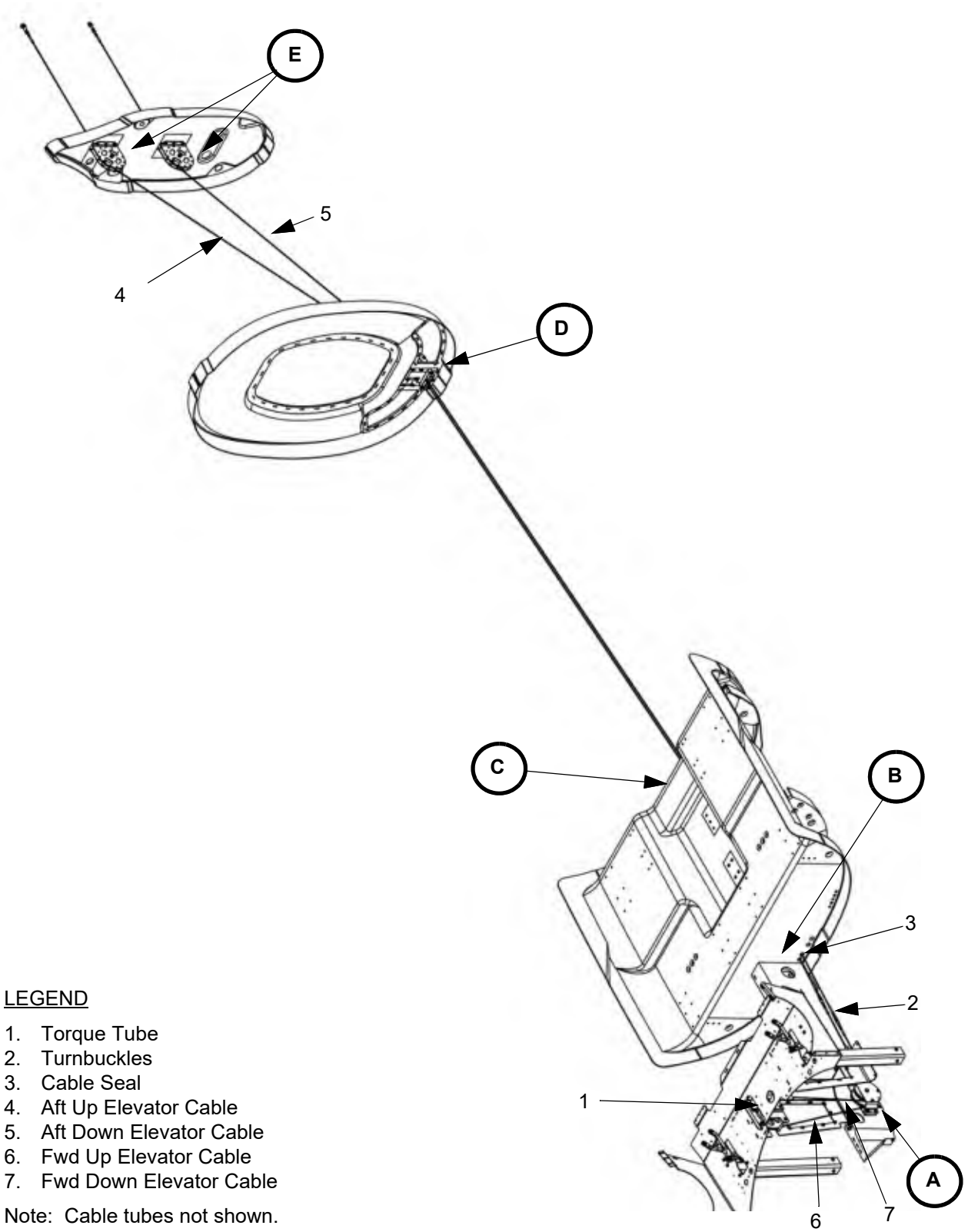

LEGEND

1. Torque Tube
2. Turnbuckles
3. Cable Seal
4. Aft Up Elevator Cable
5. Aft Down Elevator Cable
6. Fwd Up Elevator Cable
7. Fwd Down Elevator Cable

Note: Cable tubes not shown.

Figure 27-30.4: Elevator Pulleys (Sheet 2 of 4)

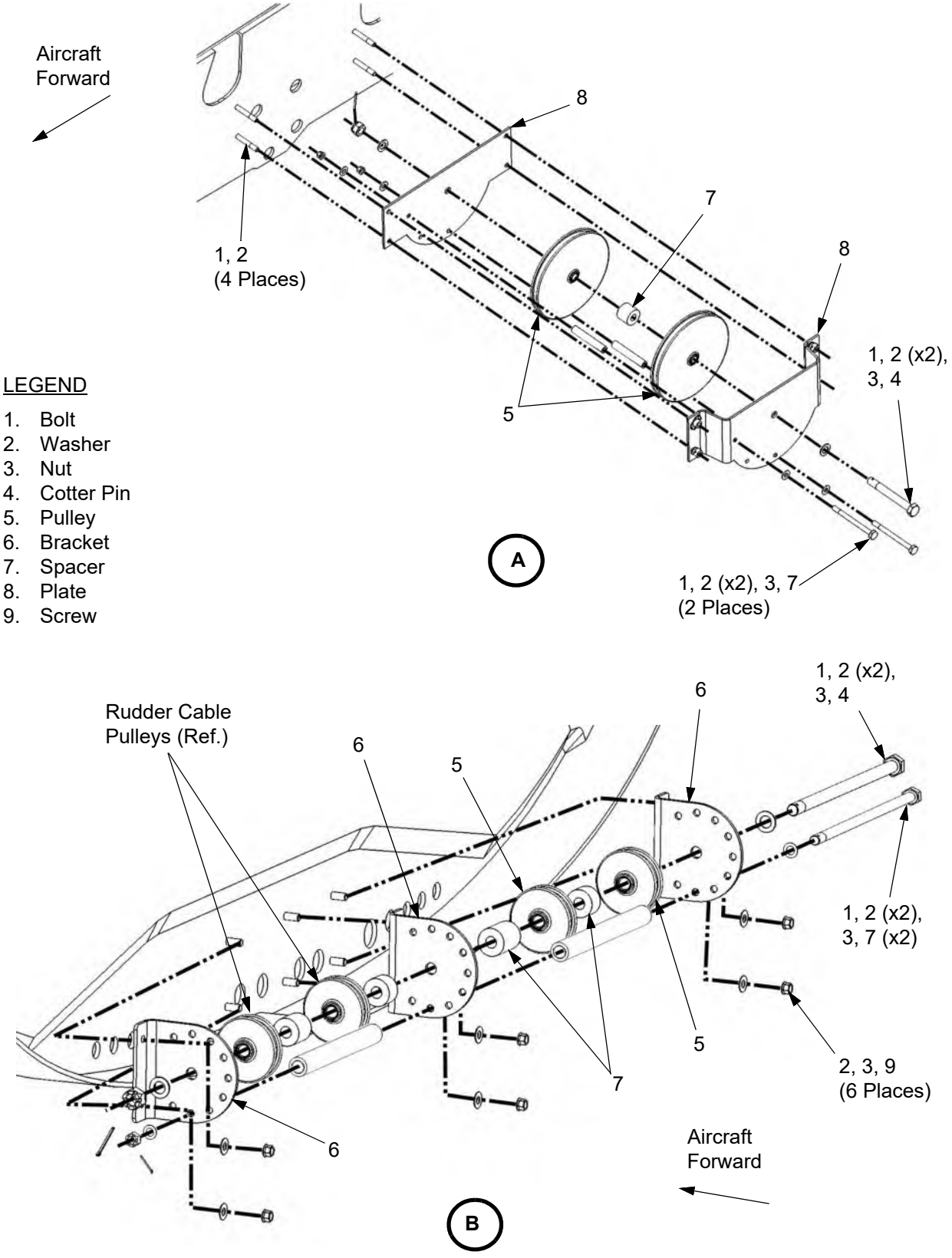

Figure 27-30.4: Elevator Pulleys (Sheet 3 of 4)

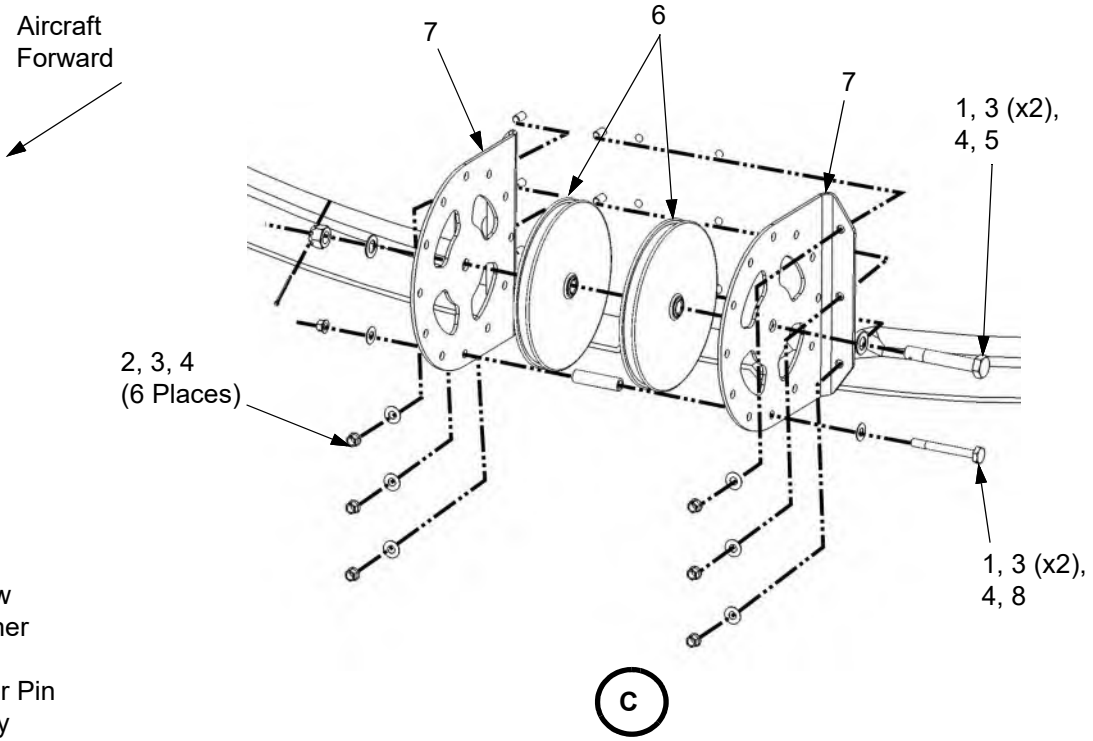

LEGEND

1. Bolt
2. Screw
3. Washer
4. Nut
5. Cotter Pin
6. Pulley
7. Bracket
8. Spacer

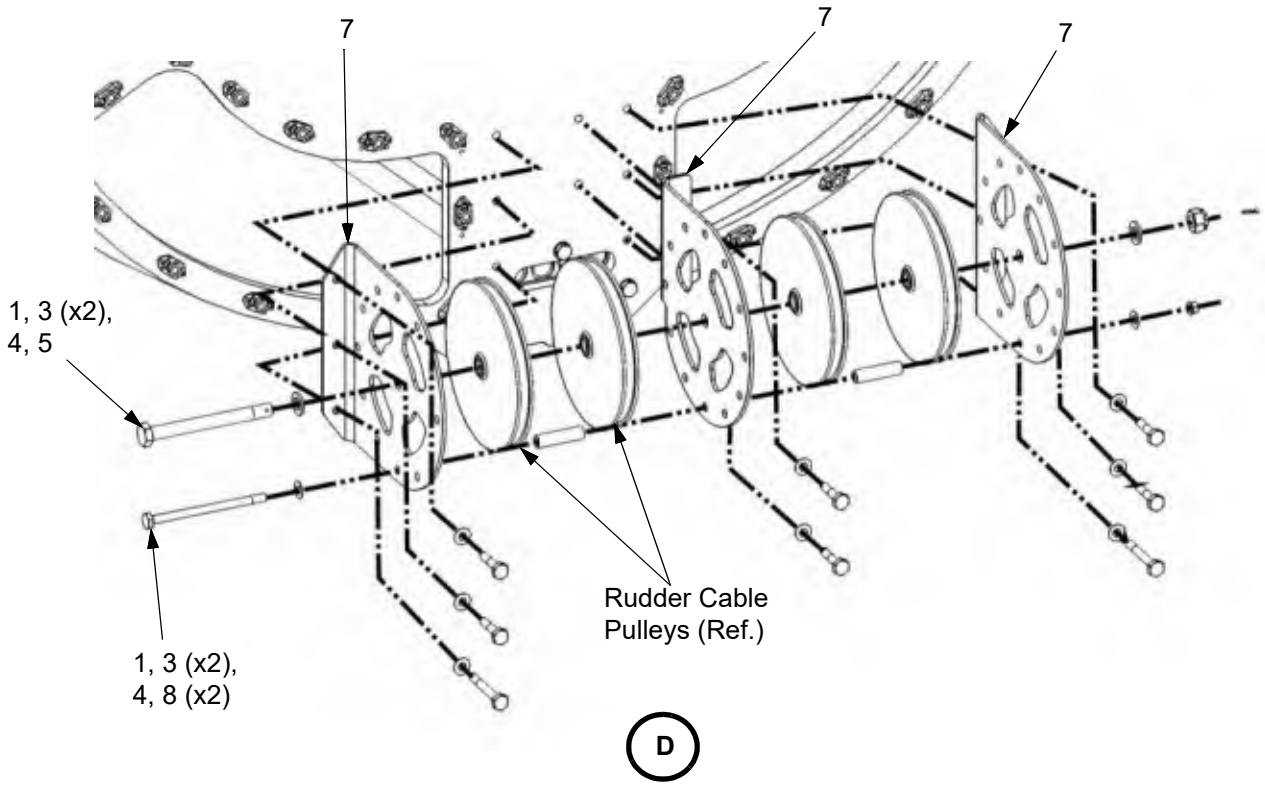

Figure 27-30.4: Elevator Pulleys (Sheet 4 of 4)

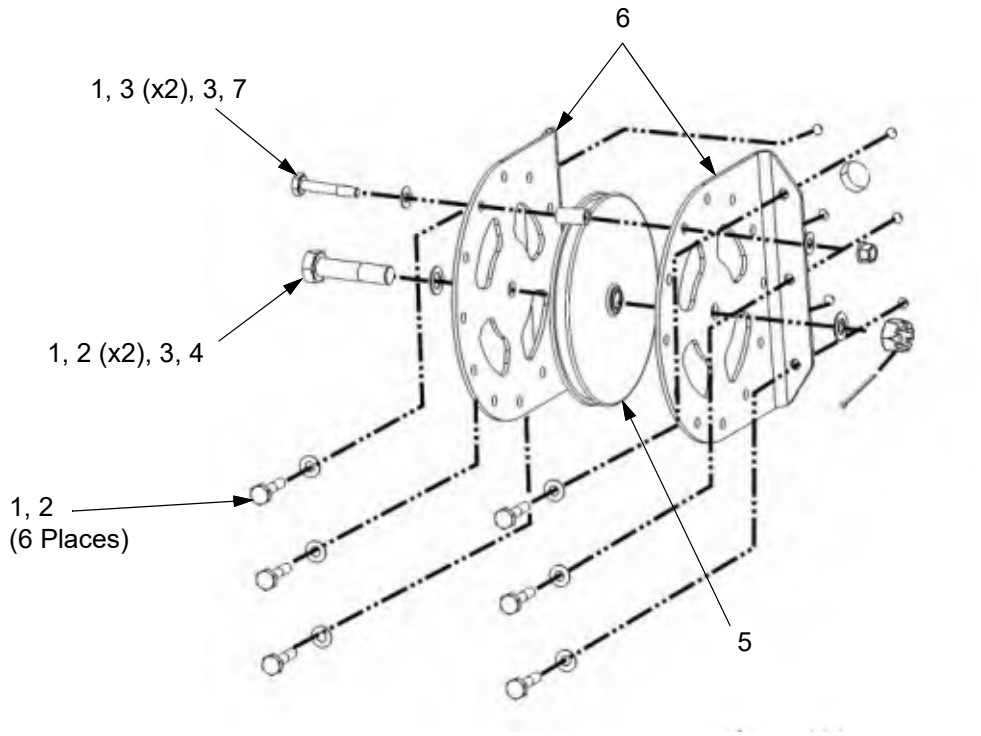

LEGEND

1. Bolt
2. Washer
3. Nut
4. Cotter Pin
5. Pulley
6. Bracket
7. Spacer

E. Yoke

(1) Removal

(a) Verify the BATT 1 and BATT 2 switches are set to OFF.

(b) Disconnect external electrical power from the airplane (refer to Chapter 24-40).

(c) Remove the socket head screws and washers attaching the yoke to the yoke attachment weldment.

(d) Carefully pull the yoke forward then disconnect the wiring harness.

(e) Remove the yoke.

(2) Installation

(a) Connect the wiring harness to the yoke.

(b) Attach the yoke to the yoke attachment weldment using 4 socket head screws and washers. Install safety wire as required.

(c) Verify operation of the yoke.

Figure 27-30.5: Yoke

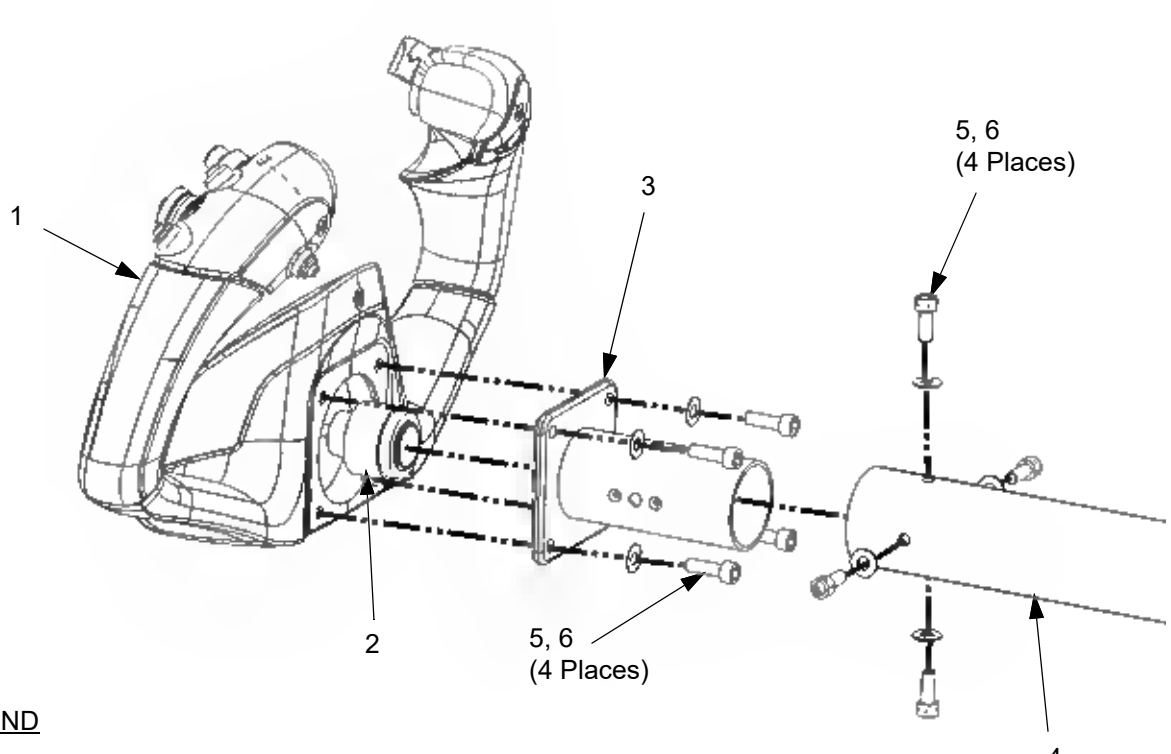

LEGEND

1. Yoke
2. Wiring Harness Connector
3. Yoke Attachment Weldment
4. Control Assembly
5. Screw
6. Washer

(Typical of Pilot and Copilot Yokes)

F. Trim Tab

(1) Removal

(a) Set the BATT 1 and BATT 2 switches to off.

(b) Open the ELEV TRIM circuit breaker.

(c) Disconnect external electrical power from the airplane (refer to Chapter 24-40).

(d) Disconnect the trim actuator pushrods from the elevator trim tab horns.

CAUTION: Rotating the actuator pushrods with the trim tab disconnected will change the rigging of the trim tab.

(e) Remove the screws that attach the trim tab to the elevator then remove the trim tab.

(2) Installation

(a) Put the elevator trim tab in position and install the screws that attach it to the elevator.

(b) Install the bolts, washers, nuts, and cotter pins that attach the trim tab actuator to the trim tab horns.

(c) Close the ELEV TRIM circuit breaker.

(d) Verify the trim tab is properly rigged, refer to Section 27-30. 2. J. Elevator Trim Tab Adjustment.

(e) Make sure the elevator trim tab moves smoothly through it's full range of travel.

Figure 27-30.6: Trim Tab

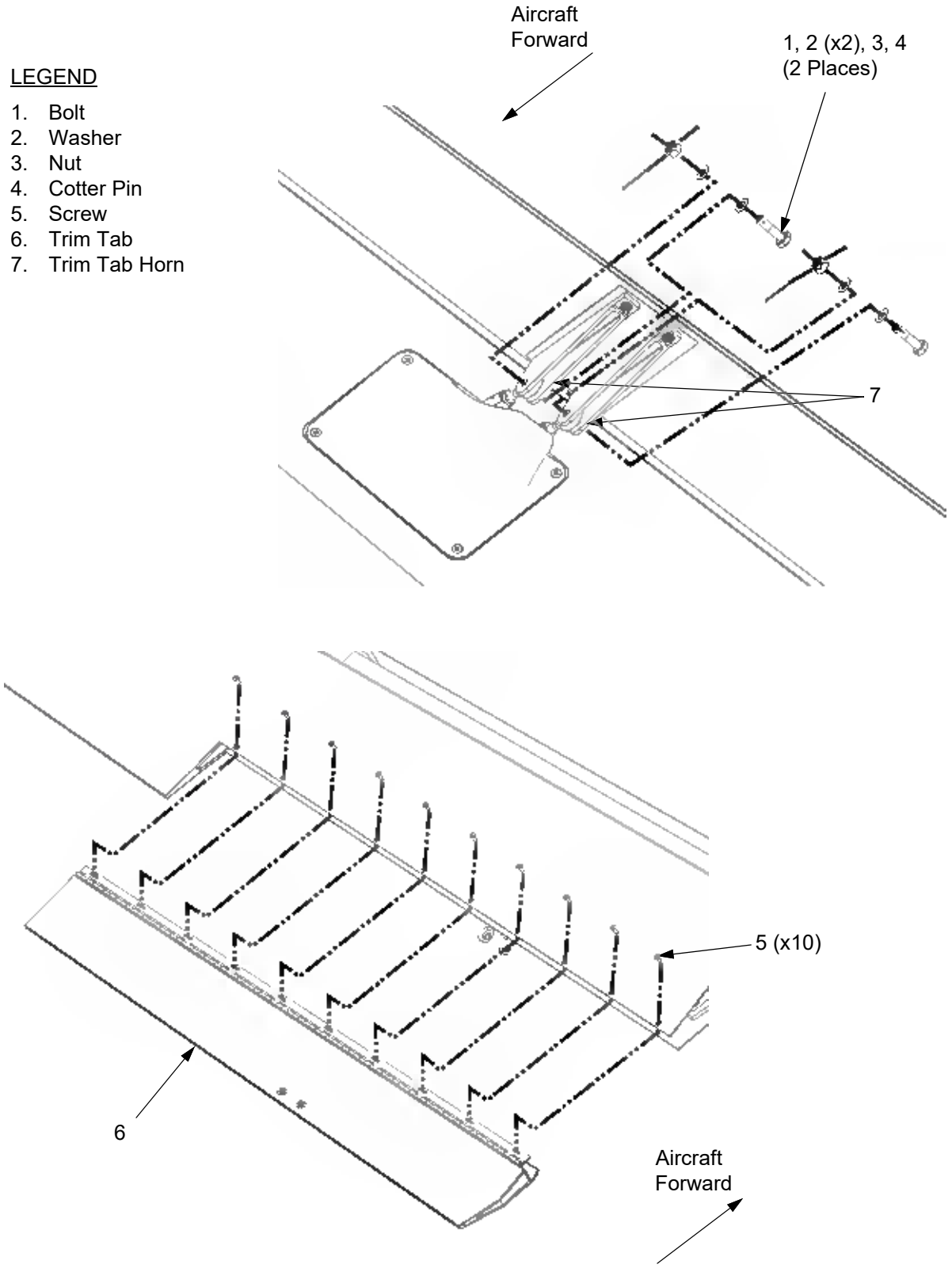

G. Trim Tab Actuator

(1) Removal

(a) Set the BATT 1 and BATT 2 switches to off.

(b) Open the ELEV TRIM circuit breaker.

(c) Disconnect external electrical power from the airplane (refer to Chapter 24-40).

(d) Remove the trim tab actuator access panel.

(e) Disconnect the trim actuator pushrods from the elevator trim tab horns.

CAUTION: Rotating the actuator pushrods with the trim tab disconnected will change the rigging of the trim tab.

(f) Remove brackets attaching the trim actuator to the elevator.

(g) Carefully move the servo aft to access the wiring harness.

(h) Disconnect the electrical connector and remove the actuator from the elevator.

(i) If necessary, remove the cotter pins, nuts, and washers that attach the brackets to the actuator.

(2) Installation

(a) Connect the wiring harness to the trim tab actuator and feed the harness into the elevator.

(b) If removed, install the brackets with the washers, nuts, and cotter pins.

(c) Put the actuator in position in the elevator.

(d) Install the bolts and washers that attach the actuator brackets to the elevator.

(e) Connect the actuator rod-ends to the trim tab horns, do not torque or safety the fasteners

(f) Verify trim tab travels, refer to refer to Chapter 27-30.1.J.

(g) Do the Elevator Trim DAT Calibration, refer to Chapter 39-10.1.H. (SN: K003-K085, except K014) or refer to Chapter 39-11.1.H. (SN: K014, K086 and On).

(h) Do the Operational Check of the trim tab actuator.

(3) Operational Check

(a) Open the ELEV TRIM circuit breaker.

(b) Push the ELEVATOR TRIM switch on both yokes.

(i) Make sure there is no motion at the elevator trim tab.

(c) Reset the ELEV TRIM circuit breaker.

(d) On the pilot side yoke, push the elevator trim switch to NOSE DN.

(i) Make sure the trailing edge of the elevator trim tab goes up.

(e) On the pilot side yoke push the elevator trim switch NOSE UP.

(i) make sure the trailing edge of the elevator trim tab goes down.

(f) Repeat steps (d) and (e) for the copilot side yoke.

(g) Push opposite directions on the elevator trim switch on both the pilot side yoke and the copilot side yoke simultaneously.

(i) Make sure the elevator trim tab moves as directed by the pilot side yoke.

(h) Using either the pilot or copilot side yoke, push and hold the elevator trim switch.

(i) Make sure the trim tab is in motion.

(ii) With the trim tab in motion push the AP/TRIM DISC switch for less than 1 second.

(iii) Make sure the trim tab stops moving immediately.

(i) Push and hold the AP/TRIM DISC Switch.

(i) Make sure the TRIM DISC CAS message displays approximately 1.25 seconds after the AP/TRIM DISC is pushed.

(j) Push the elevator trim switch on both yokes.

(i) Make sure there is no motion at the elevator trim tab.

(k) Push the TRIM RESET switch located on the pilot side yoke.

(i) Make sure the TRIM DISC CAS message extinguishes.

(l) Push the elevator trim switch on both yokes to make sure elevator trim tab motion is restored.

Figure 27-30.7: Trim Tab Actuator

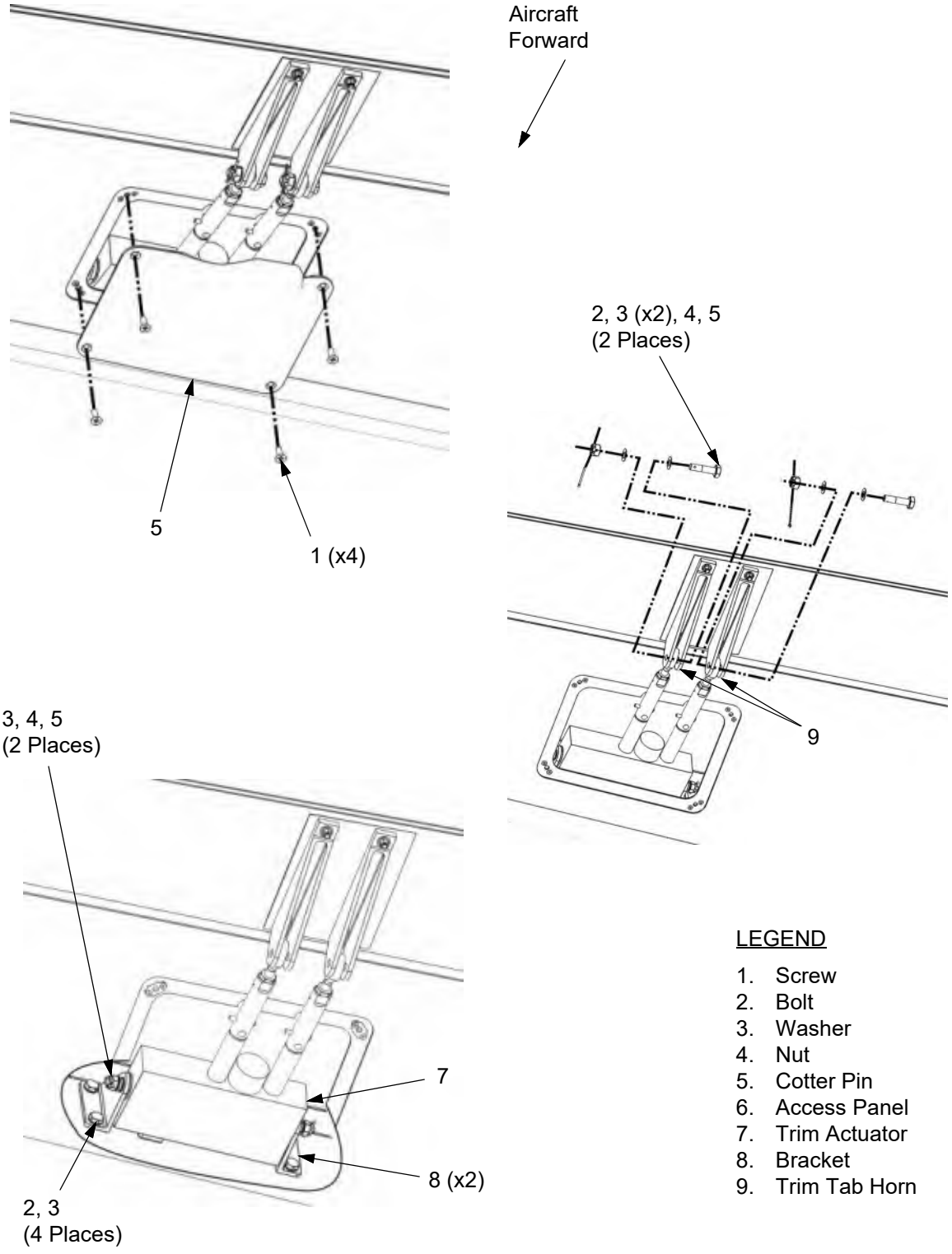

LEGEND

1. Screw
2. Bolt
3. Washer
4. Nut
5. Cotter Pin
6. Access Panel
7. Trim Actuator
8. Bracket
9. Trim Tab Horn

H. Elevator Neutral Adjustment

(1) Put the airplane in a climate controlled hangar.

(2) Let the temperature of the airplane stabilize a minimum of 3 hours before doing any inspection, rigging, or adjustments.

(3) Remove the center floor panel (refer to Chapter 53-20) to gain access to the elevator control cables.

(4) Open the emergency landing gear blowdown compartment and the fire extinguisher compartment.

(5) Put a calibrated cable tensiometer on each cable then adjust cable tension using the cable turnbuckles.

(6) Put a digital inclinometer on the elevator surface.

(7) Adjust the top and bottom cable rod ends at the elevator control horn to set the elevator to the neutral position.

(8) Re-check the cable tensions and adjust the turnbuckles as required.

Note: Cable tension will affect the elevator neutral position. Split the difference of adjustments to systematically reach required system tension. This will minimize a tendency to chase the tensions throughout the system.

(9) Tighten the jam nuts on the upper and lower elevator control horn cable rod ends. Use caution not to twist the cables.

(10) Install turnbuckle safety clips or safety wire.

(11) Install all access and floor panels (refer to Chapter 6).

(12) Install the carpet (refer to Chapter 25-10).

I. Elevator Travel Adjustment

Note: Cable tension on all elevator cables must be as specified in Chapter 27-00.

Cable tension must be set to specified values and elevator neutral must be established before adjustment of elevator travel.

Note: The deflection between the left and right hand side of the elevator must be within ± 0.5°. Measure deflection at the middle hinge.

(1) Put the airplane in a climate controlled hangar.
(2) Let the temperature of the airplane stabilize before doing any inspection, rigging, or adjustments.
(3) Put a digital inclinometer on the elevator surface.
(4) Ensure the elevator is in the neutral position.
(5) Adjust the elevator deflections as follows:
    (a) Adjust the elevator travel as necessary by increasing or decreasing the depth of the bolts in the travel stops in the elevator control horn.
    (b) Remove the safety wire then loosen the jam nut.
    (c) Adjust the depth of the travel stop bolt then test the elevator travel. Ensure the yoke stop does not hit before the travel stop.
    (d) When the travel is correct, tighten the jam nut. Install safety wire.
(6) Perform a functional check of the elevator control system as follows:
    (a) Operate the elevator with the control yoke.
        (i) Confirm the elevator is free from jamming, binding, or excessive friction.
        (ii) Confirm the elevator moves in the correct direction per yoke input.
(7) Install all access panels (refer to Chapter 6).

Figure 27-30.8: Elevator Travel Adjustment

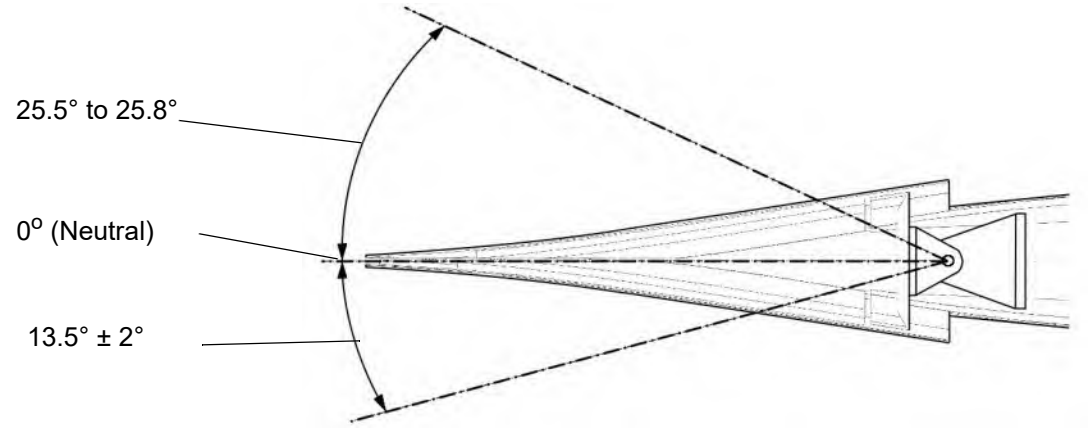

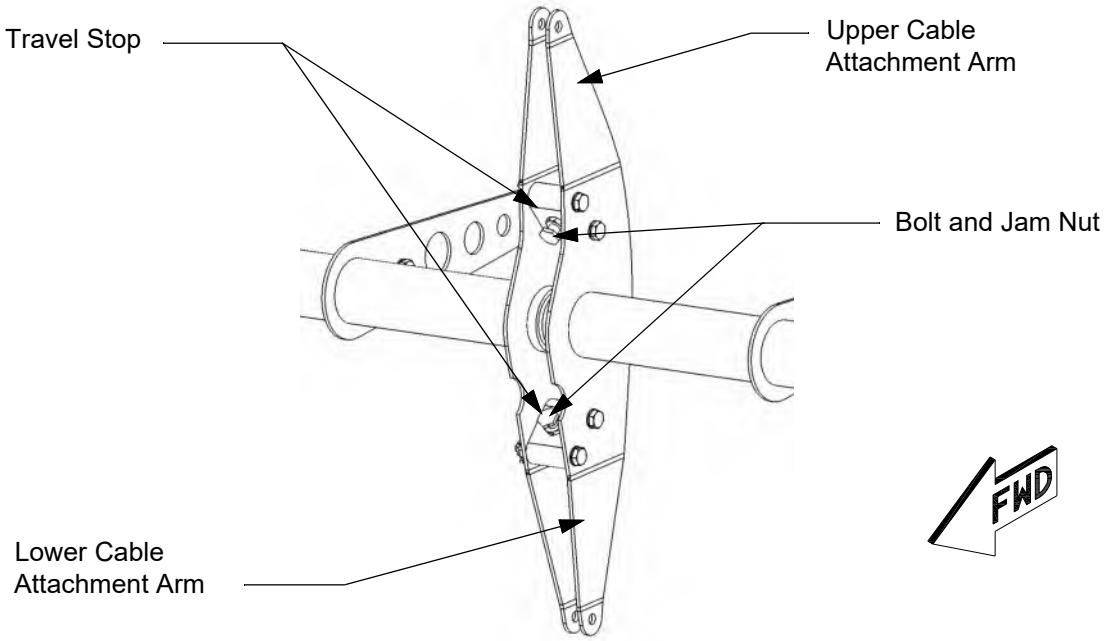

J. Elevator Trim Tab Adjustment

(1) Put the airplane in a climate controlled hangar.

(2) Loosen the jam nuts then disconnect the rod ends on the servo actuator arms from the trim tab horns.

(3) Put the elevator and trim tab into the neutral position.

(4) Hold a digital inclinometer on the trim tab skin at BL 25 then calibrate the digital inclinometer to zero.

(5) Rotate the trim tab to the correct up angle deflection. Run the servo rods to their fully extended position then adjust the rod ends until they can be temporarily reattached to the trim tab horns.

(6) Run the servo rods into their fully retracted position then check for correct down angle deflection. If necessary, readjust the rod ends and repeat the process until up and down deflection angle tolerances are achieved.

(7) Fully install the rod end hardware then tighten the jam nuts.

Figure 27-30.9: Elevator Trim Tab Adjustment

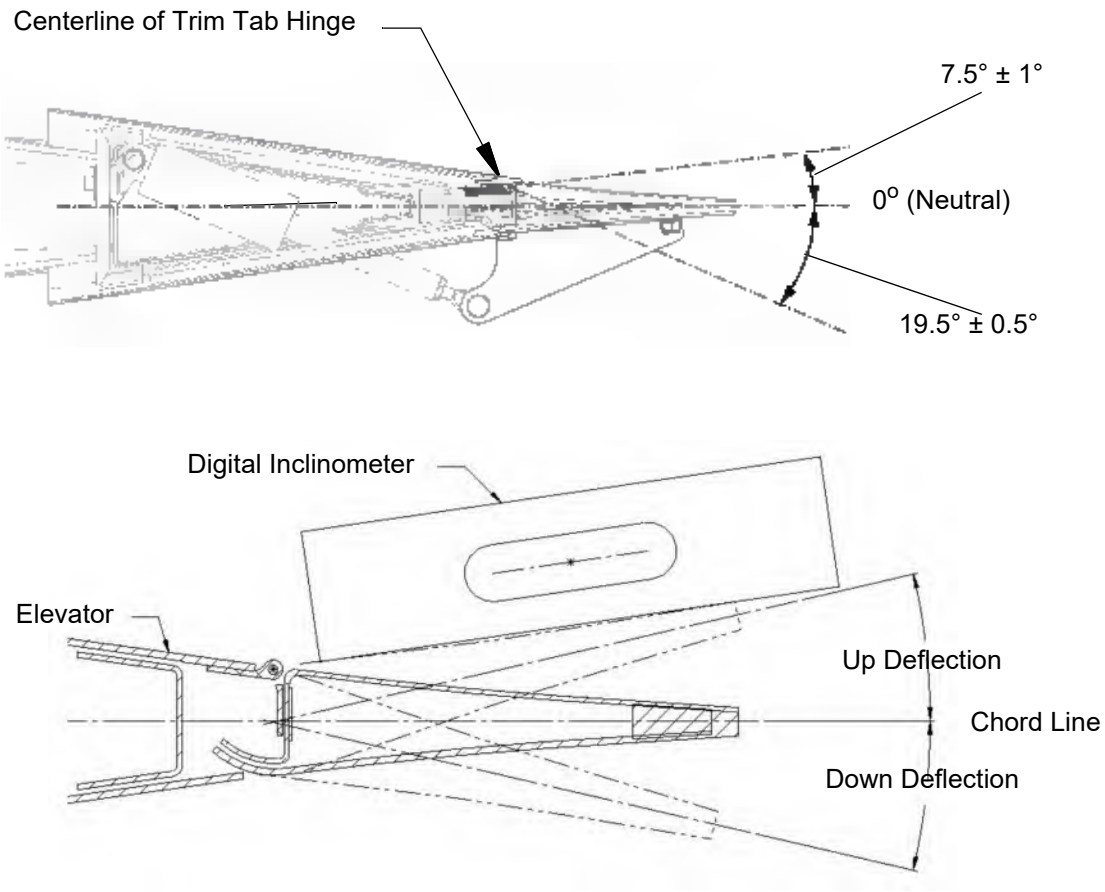

K. Inspection

(1) Remove the crew seats (refer to Chapter 25-10).
(2) Remove the crew carpet (refer to Chapter 25-10).
(3) Remove access panels 3LC, 1LE, and 1RE (refer to Chapter 6).
(4) Open the emergency landing gear blowdown compartment and the fire extinguisher compartment.
(5) Remove the pressure bulkhead access panel (refer to Chapter 21-30).
(6) Remove the airplane belly panels (refer to Chapter 57-10).
(7) Verify the elevator control cable tension is as specified in Chapter 27-00.
(8) Verify there is no checking or flat spots on the cables. Cables that are found to be shiny or show wear should be replaced.

Note: Move the cables through their full travel to inspect where the cables contact the pulleys.

Note: Disassembly of the cables to inspect the run inside the cable tubes is not required.

(9) Use a cotton cloth to run over the exposed cable to check for individual cable strand breaks.
(10) Check condition of the cable swaged ends.
(11) Verify elevator deflections (25.5° - 25.8° up and 13.5° +/-2° down).
(12) Verify elevator trim tab deflections (7.5° +/-1° up and 19.5° +/-0.5° down).
(13) Remove the elevator trim tab servo access panel.
(14) Inspect the trim tab servo
    (a) Verify no chafing of the trim tab servo wiring harness.
    (b) Verify no cracking in the servo motor case or grease out of the actuator.
    (c) Verify the rod ends are in good repair with no undo wear.
(15) Verify elevator hinges move freely with no binding through their full range of motion.
(16) Verify no cracks in the hinges.
(17) Verify a 0.020” wire will not pass through the witness hole of all rod ends.
(18) Verify free and correct operation of the elevator control system.
(19) Verify correct safety wire and cotter pins installation on all fasteners.
(20) Verify correct turnbuckle clip installation or safety wiring on all turnbuckles.
(21) Install the access panels (refer to Chapter 6).

Note: Remove all foreign object debris before installing the access panels.

(22) Install the pressure bulkhead access panel (refer to Chapter 21-30).
(23) Install the belly panels (refer to Chapter 57-10).
(24) Install the carpet and crew seats. Refer to Chapter 25-10.

FLAPS

1. Description

The flaps are moved by a worm gear driven by an electric actuator. The worm gear transmits lateral rotation to the flaps torque tubes. Control forks on the ends of the torque tube transmit motion to push pull rods connected to the flaps. The flaps actuator is controlled using a controller mounted in the instrument panel. Three pair of microswitches mounted parallel to the worm gear stop the actuator to position the flaps at the desired position as selected by the pilot in the flight deck.

WARNING: Be sure to clear the flaps before operation. Failure to clear the flaps of obstacles, tools, and personnel may result in injury or damage.

2. Maintenance Practices

A. Flaps Neutral Position

Neutral position of the flaps is defined as shown below.

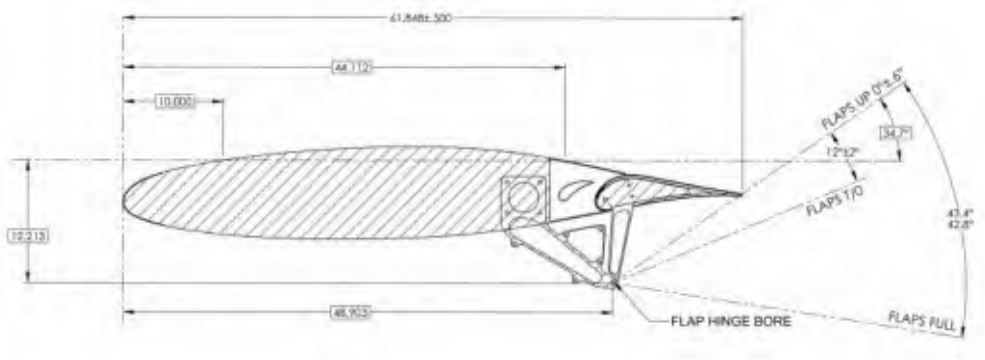

B. Flaps Actuator

(1) Removal

(a) Set the BATT 1 and BATT 2 switches to OFF then pull the FLAPS circuit breaker.

(b) Disconnect external electrical power from the airplane (refer to Chapter 24-40).

(c) Remove the airplane belly panels (refer to Chapter 57-10).

(d) Tape or block the flaps to prevent them from moving when the flaps actuator is disconnected from the flaps torque tube.

(e) Disconnect the wiring harness from the actuator.

(f) Remove the cotter pin, bolt, washers, and castellated nut attaching the potentiometer push rod to the flap actuator.

(g) Remove the cotter pin, bolt, washers, and castellated nut attaching the flap actuator to the spar box bracket.

(h) Remove the cotter pin, bolt, washers, and castellated nut attaching the flap actuator to the torque tube.

(i) Remove the flap actuator from the airplane.

(2) Installation

(a) Installation is the reverse of removal.

(b) Ensure the flaps are correctly rigged. Refer to Section 27-50. 2. H. Flap Rigging.

(c) Perform a functional check of the flaps control system.

(i) Operate the flaps system from the flight deck controls.

(ii) Confirm the flaps move to the correct position per flaps switch input.

(d) Reset the FLAPS circuit breaker.g

(e) Connect a ground power unit to the airplane (refer to Chapter 24-40).

(f) Verify clearance and test operation of the flaps actuator.

C. Flap Actuator Motor

(1) Removal

(a) Set the BATT 1 and BATT 2 switches to OFF then pull the FLAPS circuit breaker.

(b) Disconnect external electrical power from the airplane (refer to Chapter 24-40).

(c) Remove the airplane belly panels (refer to Chapter 57-10).

(d) Disconnect the flap motor electrical connector.

(e) Remove the nuts and washers that attach the flap motor to the actuator.

(f) Remove the flap motor and universal assembly from the actuator.

(2) Installation

(a) Put the flap motor and universal assembly in position on the actuator.

(b) Install the washers and nuts that attach the flap motor to the actuator. Torque the nuts to 20-25 in-lbs.

(c) Connect the flap motor electrical connector.

(d) Do an operational check of the flaps to make sure the motor is functioning.

(e) Install the airplane belly panels (refer to Chapter 57-10).

D. Flaps Torque Tube

(1) Removal

(a) Work on the airplane in a controlled environment. Clear the flaps of obstacles, tools, and personnel.

(b) Connect a ground power unit to the airplane (refer to Chapter 24-40).

(c) Set the flaps controller to the landing position to fully extend the flaps.

(d) Remove the belly panels (refer to Chapter 57-10) to access the flaps push pull control rods.

(e) Remove the flaps position potentiometer.

(f) Remove the flaps actuator. Remove the cotter pin, nut, bolt, and washers to disconnect the forward end of the push pull rods from the torque tube forks.

(g) Remove the bolts, washers, and nuts attaching the torque tube forks to both ends of the torque tube then remove the forks.

(h) Remove the bolts, tapered pins, washers, and nuts that combine the three segments of the torque tube into one piece.

(i) Remove the screws, washers, and nuts holding the torque tube bracket to the spar box.

(j) Disconnect the three segments of the torque tube then slide them out of the flanged bearings in the wing ribs and out of the airplane.

(k) Remove the flanged bearings and bearing blocks, as required.

(2) Installation

(a) Install the flanged bearings and bearing blocks, as required.

(b) Slide the outboard segments of the torque tube through the ribs and flanged bearings in the wings.

(c) Assemble the three segments of the torque tube into one piece then install the bolts, tapered pins, washers, and nuts. Torque the bolts to 60 to 85 in-lbs. Torque the tapered pins to 30 - 40 in-lbs. It is acceptable for thread protrusion of the tapered pins to be flush with the nut.

(d) Attached the torque tube bracket to the spar box using screws, washers, and nuts.

(e) Install the torque tube forks to each end of the torque tube.

(f) Attach the push pull rods to each torque tube fork.

(g) Install the flaps actuator.

(h) Install the flaps position potentiometer.

(i) Ensure the flaps are correctly rigged. Refer to Section 27-50. 2. H. Flap Rigging.

(j) Perform a functional check of the flaps control system.

(i) Operate the flaps system from the flight deck controls.

(ii) Confirm the flaps move to the correct position per flaps switch input.

(k) Install the belly panels (refer to Chapter 57-10).

E. Flaps Actuator Microswitch

When the flaps actuator moves the flaps through their range of motion, microswitches on the actuator signal the actuator where to stop for the required flaps position (Cruise, Take-Off, or Landing). Each flaps position has a microswitch which must be oriented with the switch arms facing in the correct direction.

(1) Removal

(a) Set the BATT 1 and BATT 2 switches to OFF.

(b) Pull the FLAPS and FLAPS CTRL circuit breakers.

(c) Disconnect external electrical power from the airplane (refer to Chapter 24-40).

(d) Remove the airplane belly panels (refer to Chapter 57-10).

(e) Disconnect the wiring harness from the microswitch.

(f) Remove the screws and washers that attach the microswitch to the switch block.

(g) Remove the microswitch.

(2) Installation

(a) Put the microswitch in position on the switch block.

(b) Install the screws and washers that attach the microswitch to the switch block. Torque the screws to 1-2 in-lbs.

(c) Connect the wiring harness to the microswitch.

(d) Reset the FLAPS and FLAPS CTRL circuit breakers.

(e) Rig the microswitch. Refer to Section 27-50. 2. H. Flap Rigging.

(f) Perform a functional check of the flaps control system.

(i) Operate the flaps system from the flight deck controls.

(ii) Confirm the flaps move to the correct position per flaps switch input.

(g) Install the airplane belly panels (refer to Chapter 57-10).

F. Flaps Position Potentiometer (SN: K003 - K010)

The flaps position potentiometer sends a signal to the autopilot system coordinating the position of the flaps with the autopilot phase of flight. This allows the autopilot system to provide smoother direction and altitude changes during the course of flight under autopilot control.

(1) Removal

(a) Set the BATT 1 and BATT 2 switches to OFF then pull the FLAPS and AUTOPILOT circuit breakers.

(b) Disconnect external electrical power from the airplane (refer to Chapter 24-40).

(c) Remove the airplane belly panels (refer to Chapter 57-10).

(d) Disconnect the wiring harness from the potentiometer.

(e) Disconnect the push pull rod from the potentiometer swing arm.

(f) Remove then discard the swing arm set screw.

Note: The set screw has a single use self locking strip. The set screw must be replaced at each removal.

(g) Remove the swing arm.

(h) Remove the potentiometer jam nut then remove the potentiometer from the torque tube mounting bracket.

(2) Installation

(a) Position the flaps actuator in the retracted position.

(b) Connect the push pull rod to the potentiometer swing arm.

(c) Install the potentiometer into the torque tube mounting bracket. Leave the jam nut loose so the potentiometer body can rotate without catching the locking tab holes.

(d) Attach the swing arm to the potentiometer using a new set screw. Gap the face of the swing arm approximately 0.032” from the face of the potentiometer. Ensure the flat of the set screw and the flat of the potentiometer shaft engage. Torque the set screw 12 to 15 in-lbs above running torque.

(e) Turn the potentiometer body clockwise until the internal stop is reached then turn the potentiometer approximately 1/8th of a turn (45°) counterclockwise and align the locking tab to the nearest hole in the torque tube mounting bracket.

(f) Ensure the potentiometer body does not move and torque the jam nut 30 to 40 in-lbs.

(g) Fine adjustment may be made by adjusting the rod ends on the push pull rod. When the desired length is achieved ensure the threads of the rod ends are engaged past the witness holes in the push pull rod then torque the jam nuts 30 to 40 in-lbs.

(h) Connect the wiring harness to the potentiometer.

(i) Ensure the flaps are correctly rigged. Refer to Section 27-50. 2. H. Flap Rigging.

(j) Perform a functional check of the flaps control system.

(i) Operate the flaps system from the flight deck controls.

(ii) Confirm the flaps move to the correct position per flaps switch input.

(k) Reset the FLAPS and AUTOPILOT circuit breakers.

(l) Do the autopilot system checkout procedures.

(m) Install the airplane belly panels (refer to Chapter 57-10).

Figure 27-50.1: Flaps System (Sheet 1 of 9)

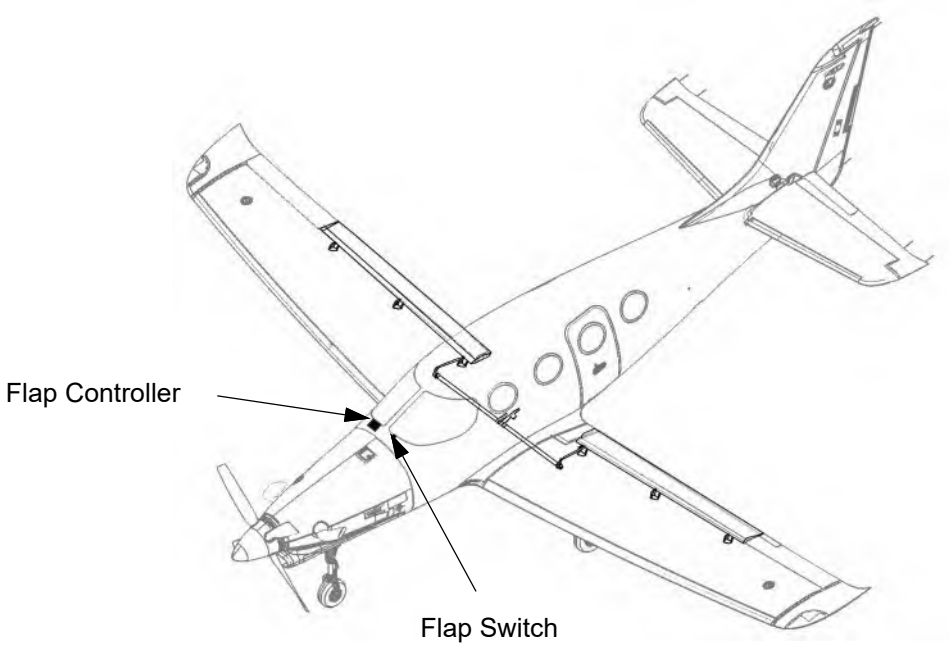

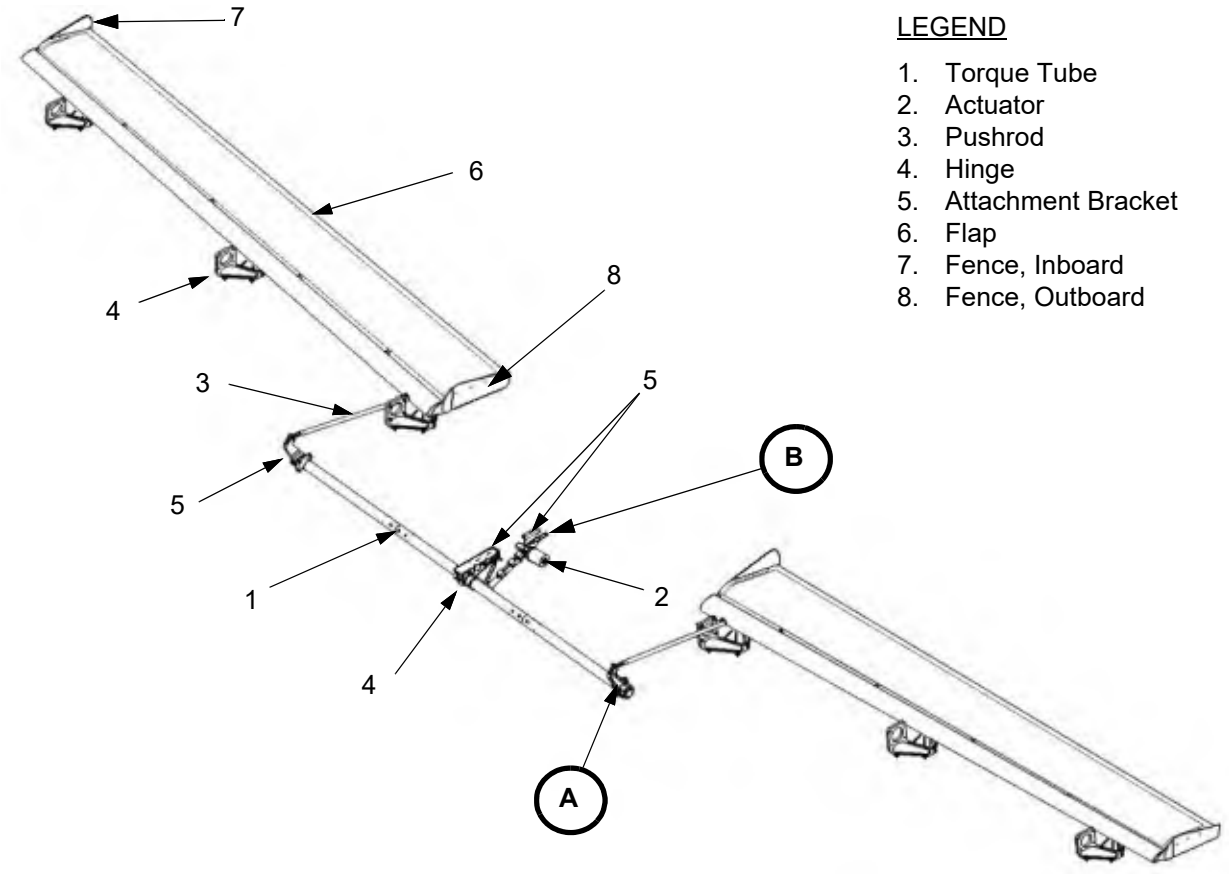

LEGEND

1. Torque Tube
2. Actuator
3. Pushrod
4. Hinge
5. Attachment Bracket
6. Flap
7. Fence, Inboard
8. Fence, Outboard

Figure 27-50.1: Flaps System (Sheet 2 of 9

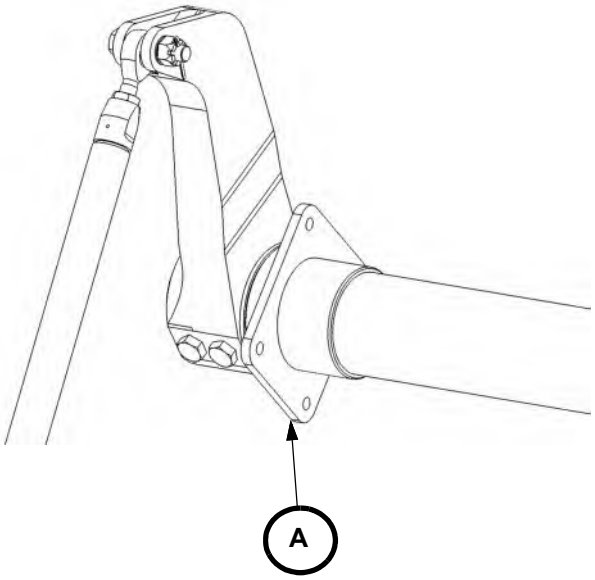

LEGEND

1. Torque Tube
2. Flanged Bearing
3. Fork
4. Pushrod
5. Flange
6. Bolt
7. Washer
8. Nut
9. Cotter Pin

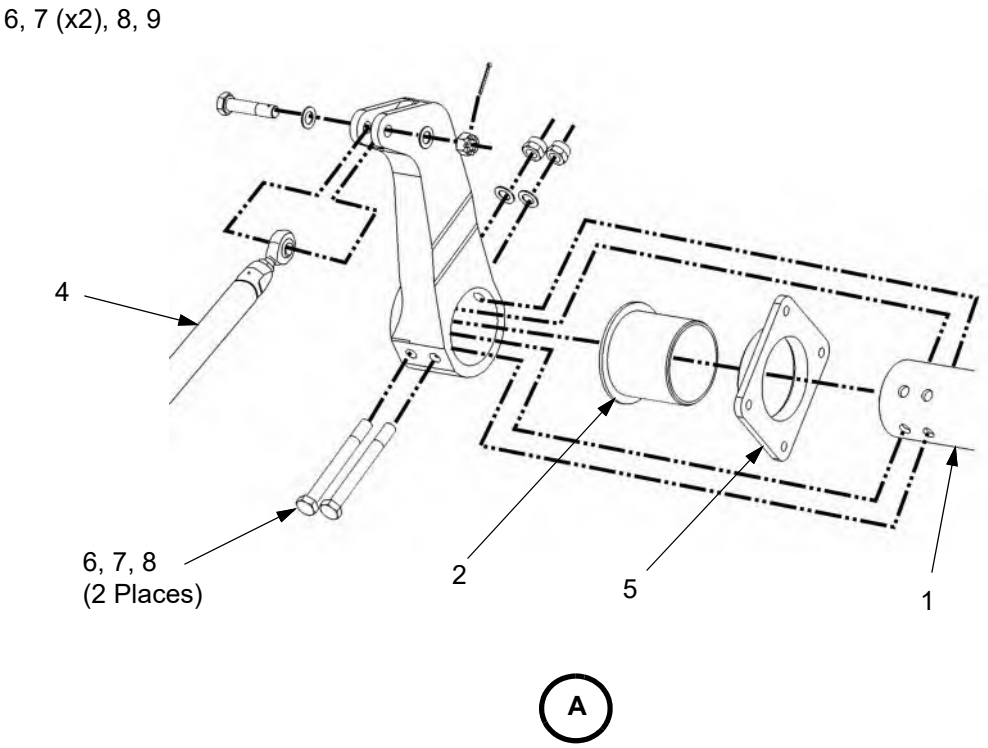

Figure 27-50.1: Flaps System (Sheet 3 of 9)

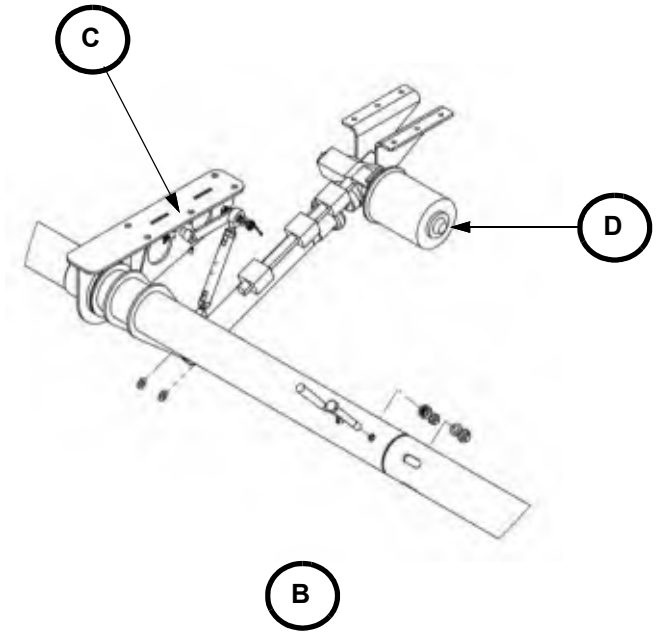

LEGEND

1. Actuator
2. Tapered Pin
3. Taper Pin Washer
4. Torque Tube
5. Bushing
6. Bolt
7. Washer
8. Nut
9. Cotter Pin

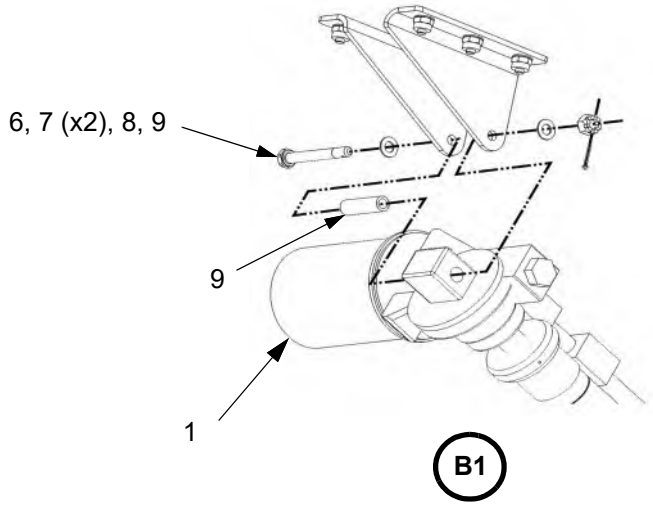

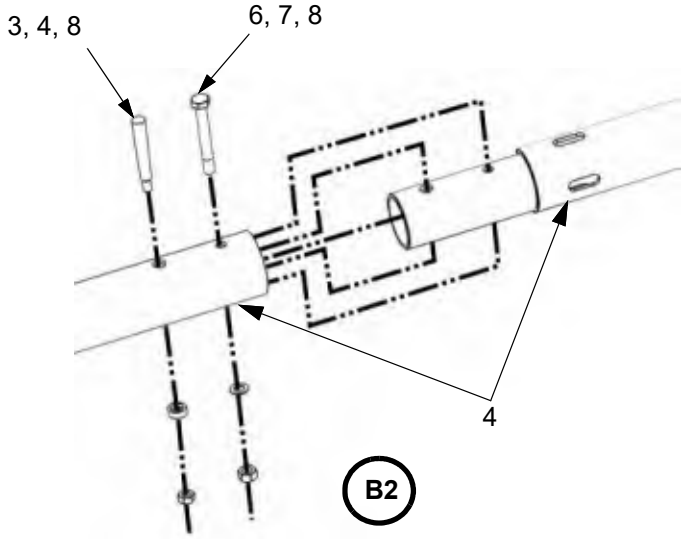

Figure 27-50.1: Flaps System (Sheet 4 of 9)

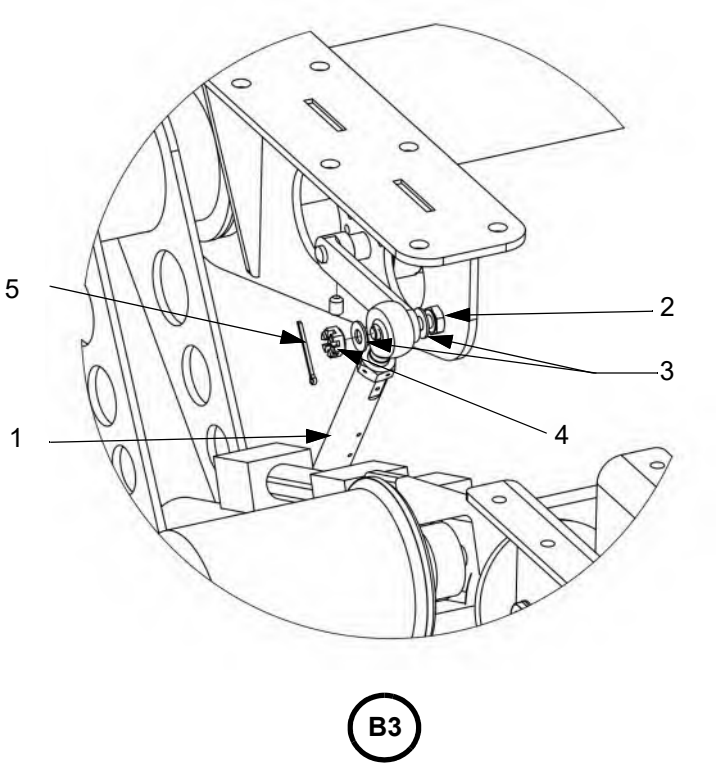

LEGEND

1. Pushrod
2. Bolt
3. Washer
4. Castellated Nut
5. Cotter Pin
6. Bushing

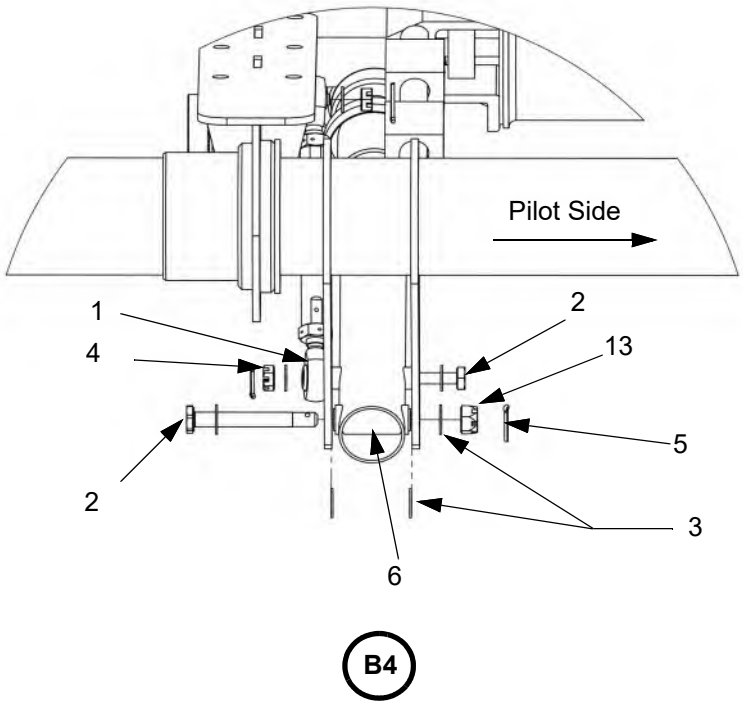

Figure 27-50.1: Flaps System (Sheet 5 of 9)

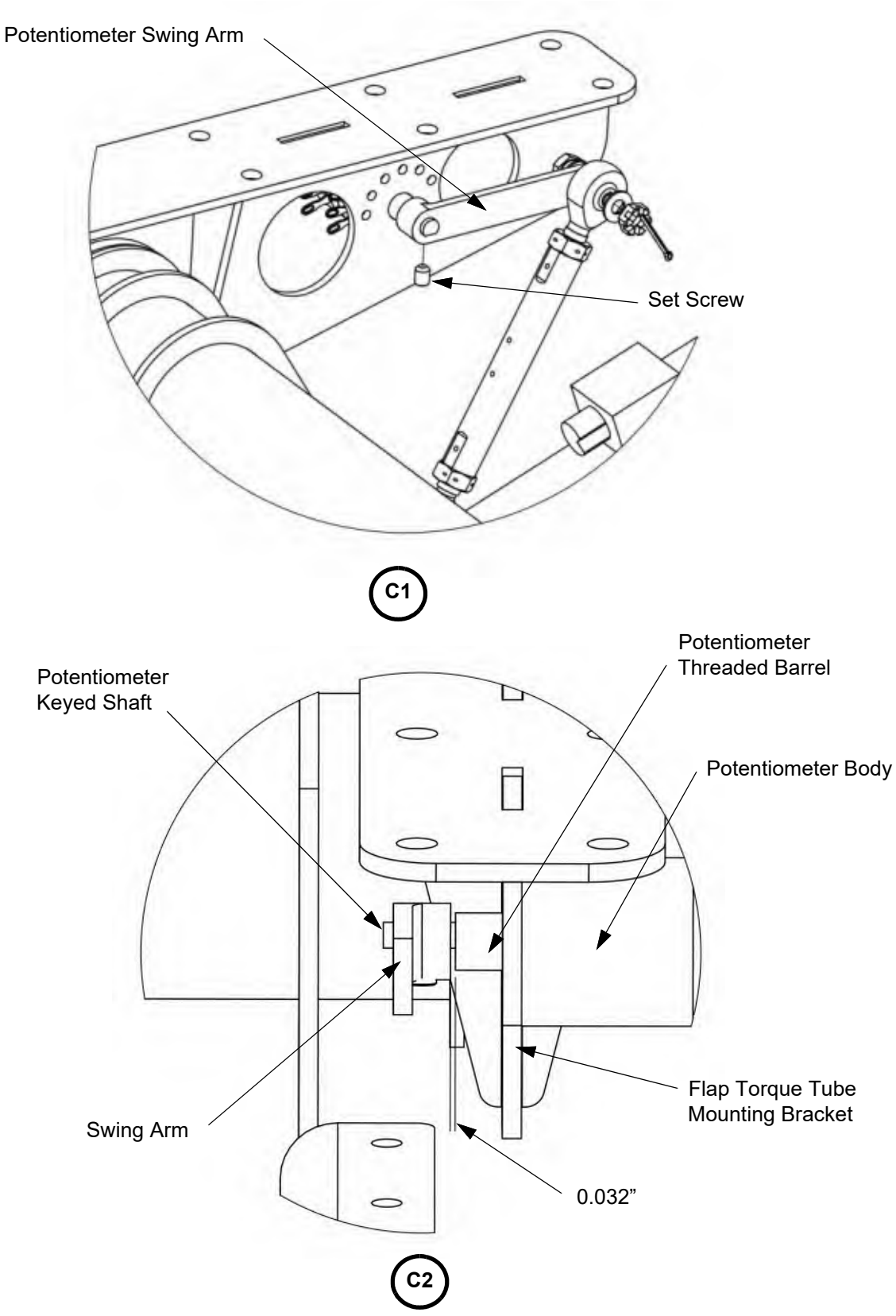

Figure 27-50.1: Flaps System (Sheet 6 of 9)

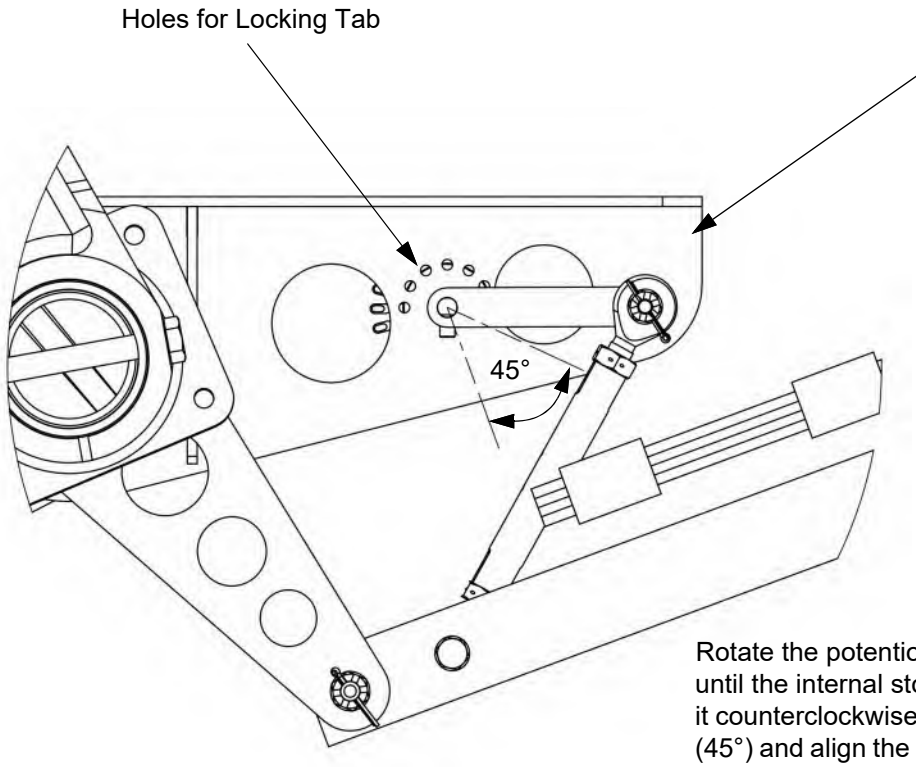

Rotate the potentiometer body clockwise until the internal stop is reached then rotate it counterclockwise approximately 1/8th turn (45°) and align the locking tab to the nearest hole in the flap torque tube mounting bracket.

C3

Figure 27-50.1: Flaps System (Sheet 7 of 9)

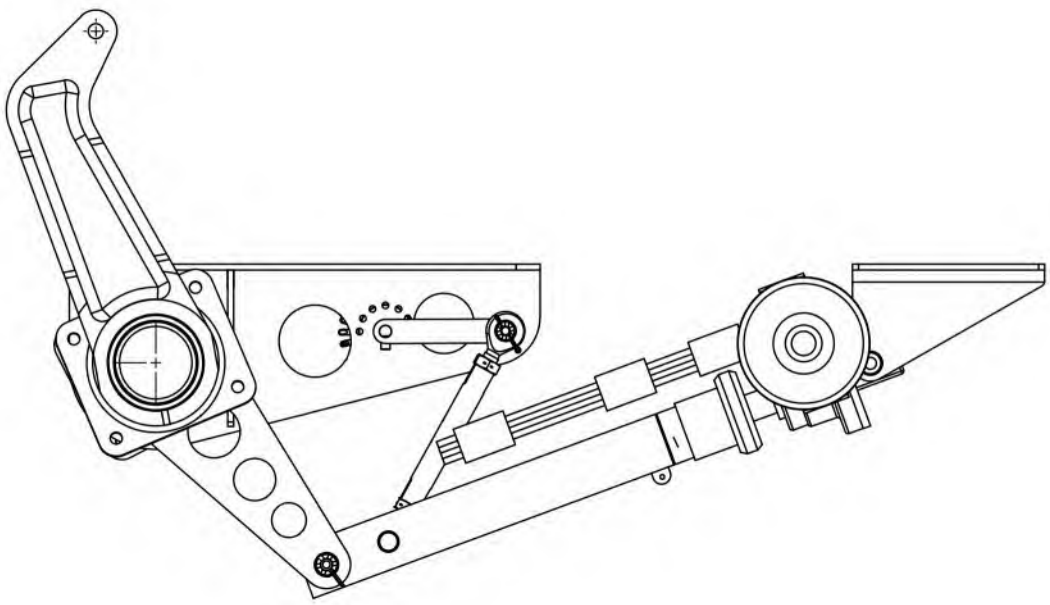

FLAPS ACTUATOR FULLY RETRACTED

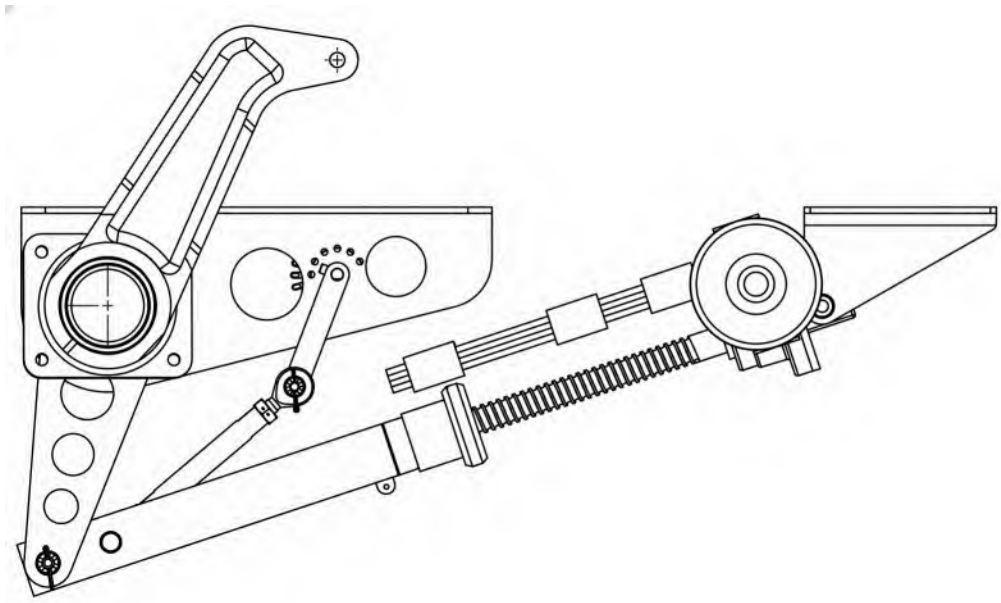

FLAPS ACTUATOR FULLY EXTENDED

C4

Figure 27-50.1: Flaps System (Sheet 8 of 9)

LEGEND

1. Flap Motor
2. Actuator
3. UP Position Microswitch
4. T/O Position Microswitch
5. Primary and Secondary* FULL Position Microswitches
6. Switch Ramp*

* Secondary FULL Limit switch and Switch Ramp SN:K033 and On and K003 - K032 with SB-0034 only.

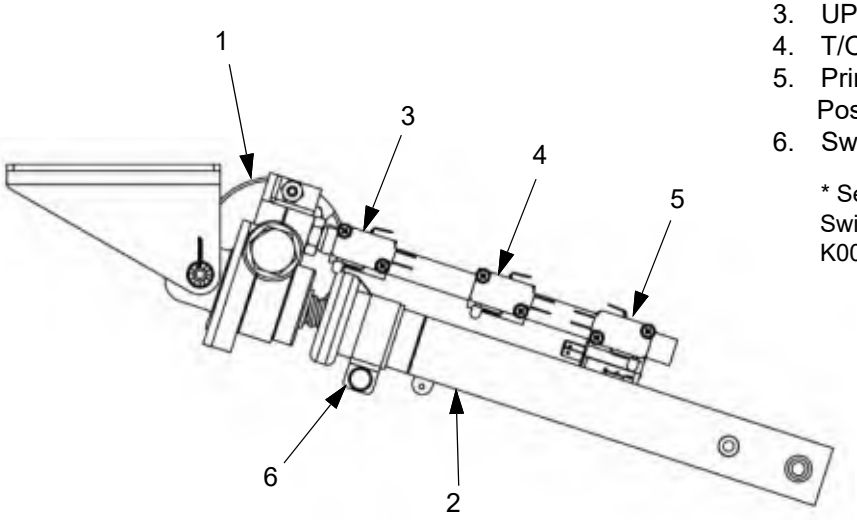

Actuator Shown Fully Retracted (UP Position)

Note: It is allowable to bend the microswitch arms to remove slack between the arm and the switch. If the arm hangs down too far the actuator drive will fold the arm against itself making the microswitch inoperable.

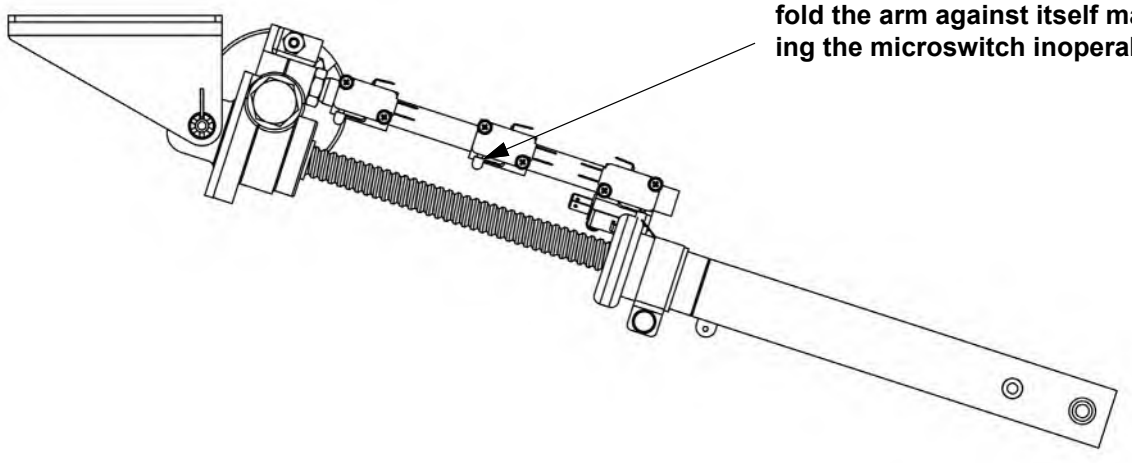

Actuator Shown Fully Extended (FULL Position)

D1

Figure 27-50.1: Flaps System (Sheet 9 of 9)

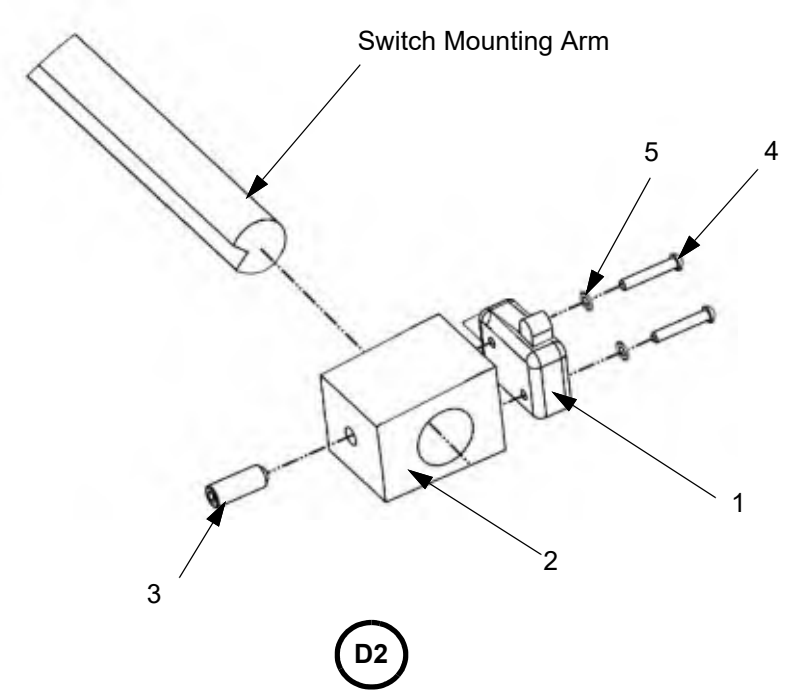

LEGEND

1. Microswitch
2. Switch Holder
3. Setscrew
4. Screw
5. Washer
6. Flap Motor
7. Universal Assembly
8. Nut
9. Washer

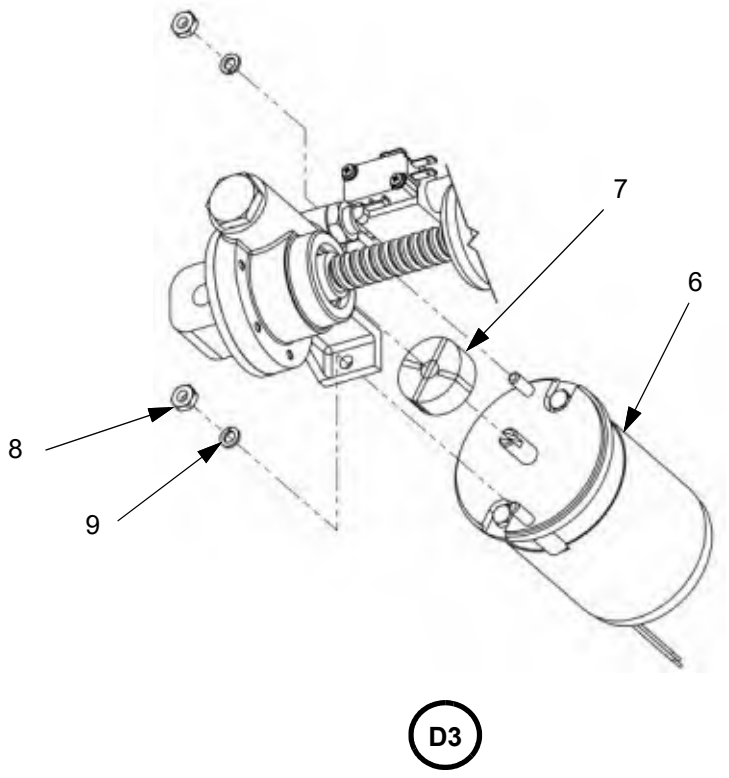

G. Flap Controls

(1) Removal

(a) Set the BATT 1 and BATT 2 switches to off.

(b) Pull and collar the FLAPS circuit breaker.

(c) Disconnect external electrical power from the airplane (refer to Chapter 24-40).

(d) Remove the GCU 477 FMS (Refer to Chapter 34-40).

(e) Remove the GDU 1250 MFD (Refer to Chapter 34-40).

(f) Remove the center display bezel (Refer to Chapter 25-10).

(g) Remove the pedestal finish panels (Refer to Chapter 25-10).

(h) Remove the 2 set screws that attach the flap knob to the flaps controller shaft and remove the knob.

(i) Remove the 3 screws and washers that attach the flap controller light panel to the bracket.

(j) Carefully pull the light panel aft and disconnect the 2 screws, 2 washers, and connector retainer bracket that secures the electrical connector. Remove the light panel.

(k) Remove the screws and washers that attach the flap switch shaft bracket to the GCU bracket and remove the bracket.

(l) Remove the 2 set screws that attach the flap controller shaft to the flaps controller then remove the shaft.

(m) Remove the 8 screws that attach the GCU mount face plate to the brackets and remove the face plate.

(n) Remove the 2 screws and washers that attach the flaps controller mounting bracket to the instrument panel.

(o) Disconnect the electrical connectors from the flap controller.

(p) Remove the flaps controller and mounting bracket from the instrument panel.

(q) Remove the 6 screws, washers, and nuts that attach the flaps controller to the mounting bracket.

(r) Remove the flaps controller from the bracket.

(2) Installation

(a) Install the flaps controller on the bracket with the 6 screws, washers, and nuts.

(b) Put the flap controller in position in the instrument panel and connect the electrical connectors.

(c) Install the 2 screws and washers that attach the flap controller to the instrument panel.

(d) Put the GCU mount face plate in position and install the 8 screws that attach it to the instrument panel.

(e) Install the flap controller shaft on the flaps controller and install the 2 set crews.

(f) Put the flap switch shaft bracket in position and install the 2 screws and washers that attach it to the GCU bracket.

(g) Install the 2 screws and 2 washers, that attach the connector retainer bracket to the light panel.

(h) Connect the electrical connector to the flap light panel and put the light panel in position.

(i) Install the 3 screws and washers that attach the light plate to the brackets.

(j) Put the flap control knob in position and install the 2 set screws that attach it to the shaft.

(k) Install the pedestal finish panels (Refer to Chapter 25-10).

(l) Install the center display bezel (Refer to Chapter 25-10).

(m) Install the GCU 477 FMS (Refer to Chapter 34-40).

(n) Install the GDU 1250 MFD (Refer to Chapter 34-40).

(o) Connect a ground power unit to the airplane (refer to Chapter 24-40).

(p) Reset the FLAPS circuit breaker.

(q) Set the BATT 1 and BATT 2 switches to ON.

(r) Move the flaps through their full range of travels. Make sure the switch position agrees with the flap position.

(s) Set the BATT 1 and BATT 2 switches to off.

(t) Disconnect the ground power unit from the airplane (refer to Chapter 24-40).

Figure 27-50.2: Flap Controls

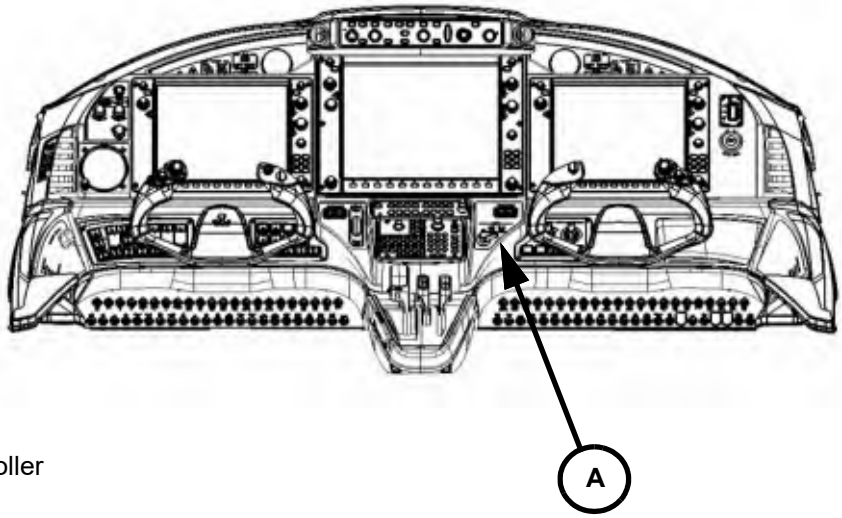

LEGEND

1. Flap Controller
2. Knob
3. Light Panel
4. Bracket
5. Shaft
6. Set Screw
7. Screw
8. Washer
9. Center Display Bezel (Ref.)
10. Connector Retainer

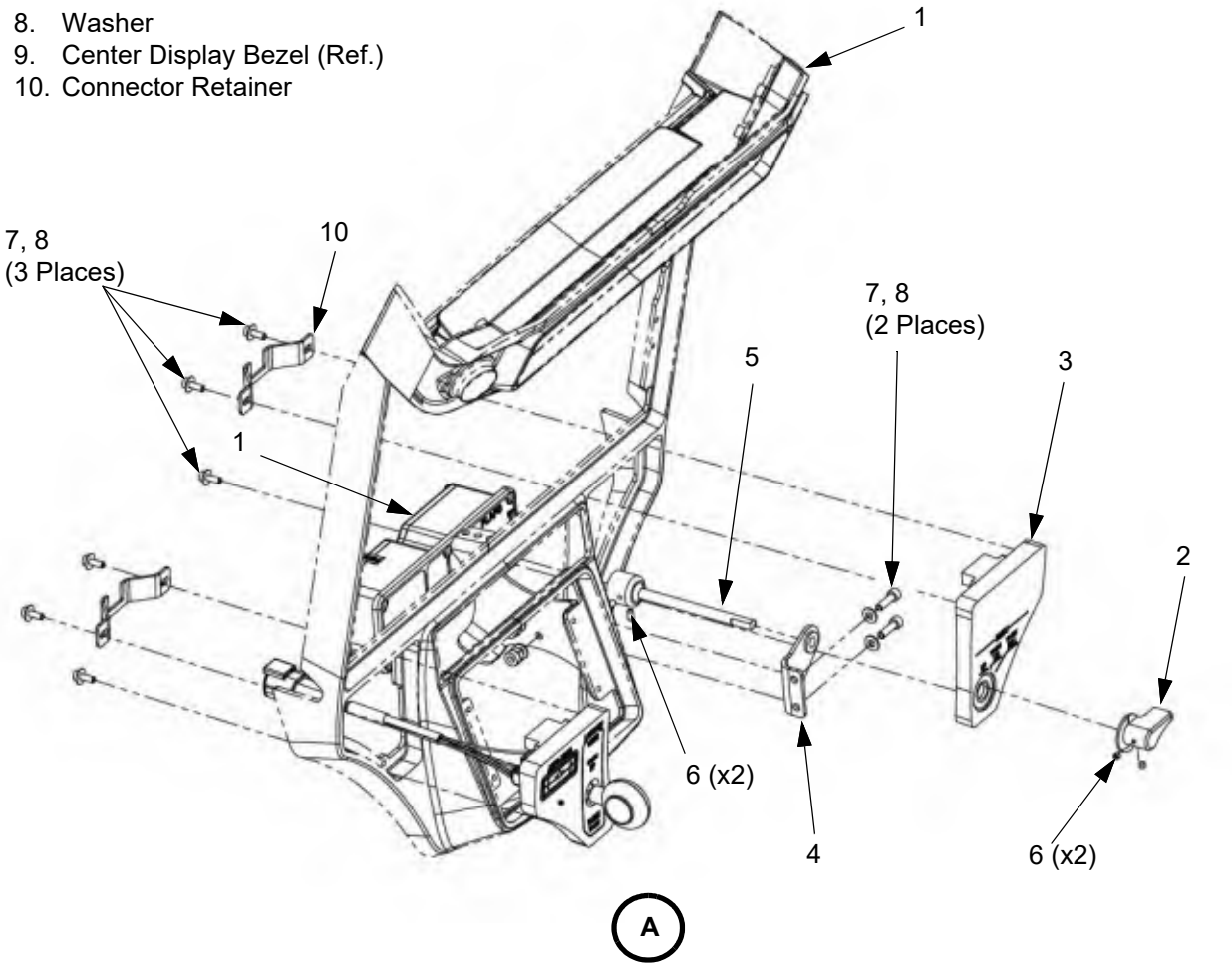

H. Flap Rigging

CAUTION: Work on the airplane in a controlled environment. Clear the flaps of obstacles, tools, and personnel.

(1) Connect a ground power unit to the airplane (refer to Chapter 24-40).

(2) Remove the airplane belly panels (refer to Chapter 57-10).

CAUTION: Flaps movement beyond the specified retracted or extended positions may damage the flaps system.

CAUTION: Prevent operation of the jackscrew into the end cap of the assembly when setting the deflections. This could result in damage to the end cap.

CAUTION: Make sure the FLAPS CTRL circuit breaker is open when making adjustments to the microswitches.

(3) Set the BATT 1 and BATT 2 switches to ON.

CAUTION: Make sure the flap drive forks do not contact the spar cap.

(4) Make sure the flaps are in the UP position.

(5) Make sure the flap drive forks have a minimum clearance of 0.050” from the aft face of the forward wing spar cap and the gap between the ball nut and jackscrew stop is a minimum of .03". Adjust the UP microswitch to achieve the minimum dimensions as follow:

(a) Pull the FLAPS CTRL circuit breaker.

(b) Loosen the set screw holding the UP microswitch in position then slide the switch along the support rod. Torque the set screw to 12-15 in-lbs when the microswitch is in the desired location.

Note: Make sure the switch ramp is centered to actuate the primary position switches. Adjust as needed. (SN: K033 and On and K003 - K032 with SB-0034 Only)

Note: Move the flaps microswitches in small increments.

(c) Reset the FLAPS CTRL circuit breaker.

CAUTION: The flaps motor may respond to the new microswitch position and change the flap angle.

(d) Move the flaps to the T/O position, then back to UP to check the up deflection and clearances.

(6) Put the flap rig board (P/N TK51600002I) in position on the wing aligned with the center flap hinge.

CAUTION: The flap preload must be distributed over a minimum area of 1 in^2 applied at a span wise distance of 6" inboard of the center flap hinge. It may be necessary to shake any remaining system compliance out in the retract direction to ensure the preload is effective.

CAUTION: Keep the preload applied to the flaps while making microswitch adjustments to assure correct travels are achieved.

(7) Apply a preload of 55 to 65 lb to the flaps in the retract direction.

(8) Set the UP position of the flaps by adjusting the flaps pushrod lengths.

Note: Remove the preload to make adjustments to the pushrods, and reapply preload to verify correct flap position.

(9) Make sure 0.020" safety wire will not pass through the witness holes of the rod ends.

(10) Torque the left and right flap pushrod jam nuts to 60-85 in-lbs.

Note: Up to 0.5 degrees of rigging asymmetry may be used to correct flight characteristics resulting from inherent manufacturing variance.

(11) Put the flaps in the T/O position.

(12) Pull the FLAPS CTRL circuit breaker.

(13) Adjust the T/O position microswitch as follows:

(a) Loosen the set screw holding the T/O microswitch in position then slide the switch along the support rod. Torque the set screw to 12-15 in-lbs when the microswitch is in the desired location.

Note: Move the flaps microswitches in small increments.

(b) Reset the FLAPS CTRL circuit breaker.

CAUTION: The flaps motor may respond to the new microswitch position and change the flap angle.

(c) Move the flaps to the UP position, then back to T/O.

(d) Check the flaps position on the rig board each time the microswitch is moved until the T/O flaps angle of 12° ± 2° is achieved.

(14) Adjust the primary FULL position microswitch as follows (SN: K003 - K032 without SB-0034):

(a) Set the flaps to FULL.

(b) Make sure the gap between the ball nut and jackscrew stop is a maximum of 5.80" in the FULL position.

(c) Pull the FLAPS CTRL circuit breaker.

(d) Loosen the set screw holding the primary FULL microswitch in position then slide the switch block along the support rod. Torque the set screw to 12-15 in-lbs when the microswitch is in the desired location.

Note: Move the flaps microswitches in small increments.

(e) Reset the FLAPS CTRL circuit breaker.

CAUTION: The flaps motor will respond to the new microswitch position and change the flaps angle.

(f) Check the flaps position on the rig board each time the microswitch is moved until the FULL flaps angle of 42.8° to 43.4° is achieved.

(g) Reset the FLAPS CTRL circuit breaker.

(15) Adjust the primary and secondary FULL position microswitches as follows (SN: K033 and On and K003 - K032 with SB-0034):

CAUTION: Make sure the FLAPS circuit breaker is open when making adjustments to the microswitches.

(a) Set the flaps to FULL.

(b) Make sure the gap between the ball nut and jackscrew stop is a maximum of 5.80" in the FULL position.

(c) Pull the FLAPS CTRL circuit breaker.

Note: Both the primary and secondary full limit switches must stop the flaps within the travel limits, 42.8° - 43.4°. Keeping the secondary limit switch travel in spec will be easier if the primary switch is adjusted to the lower end of the travel limit.

(d) Loosen the set screw holding the primary and secondary FULL microswitches in position then slide the switch block along the support rod. Torque the set screw to 12-15 in-lbs when the microswitch is in the desired location.

Note: Move the flaps microswitches in small increments.

(e) Adjust the switch ramp as needed so the primary full limit switch activates just before the secondary full limit switch.

(f) Reset the FLAPS CTRL circuit breaker.

CAUTION: The flaps motor will respond to the new microswitch position and change the flaps angle.

(g) Check the flaps position on the rig board each time the microswitch is moved until the FULL flaps angle of 42.8° to 43.4° is achieved.

(h) After the primary switch is correctly adjusted, do the steps that follow:

(i) Move the flaps to the T/O position.
(ii) Pull the FLAPS CTRL circuit breaker.
(iii) Disconnect the electric connection from the primary limit switch.
(iv) Reset the FLAPS CTRL circuit breaker.
(v) Move the flaps to the FULL position.

Note: The FLAPS FAIL CAS message will appear with the primary limit switch disconnected.

(vi) Make sure the FULL travel is 42.8° to 43.4° on the secondary limit switch.
(vii) Pull the FLAPS CTRL circuit breaker.
(viii) Connect the electric connection to the primary limit switch.
(ix) Reset the FLAPS CTRL circuit breaker.

(16) Move the flaps to the UP position, make sure the FLAPS FAIL CAS message does not appear.

(17) Check the flap to wing clearances in all three positions and adjust rigging if needed to provide the correct clearances. All travels must stay within the provided travel limits (refer to Chapter 27-00).

(18) Operate the flap control system from the flight deck through each flap setting and back to flaps up and verify the following:

(a) At UP, make sure the clearance between the flap fork and upper wing skin is at least 0.050”.

(b) At FULL, make sure the clearance between the flap pushrod and aft wing spar pass through hole is at least 0.050”.

(c) Make sure the flap system is free from jamming, binding, or chattering.

(d) Make sure the flaps travel to the selected flap position and the FLAPS FAIL CAS message is not illuminated.

(19) Set the BATT 1 and BATT 2 switches to OFF.

(20) Disconnect the ground power unit from the airplane (refer to Chapter 24-40).

(21) Install the airplane belly panels (refer to Chapter 57-10).

Figure 27-50.3: Flap Rigging and Adjustment (Sheet 1 of 3)

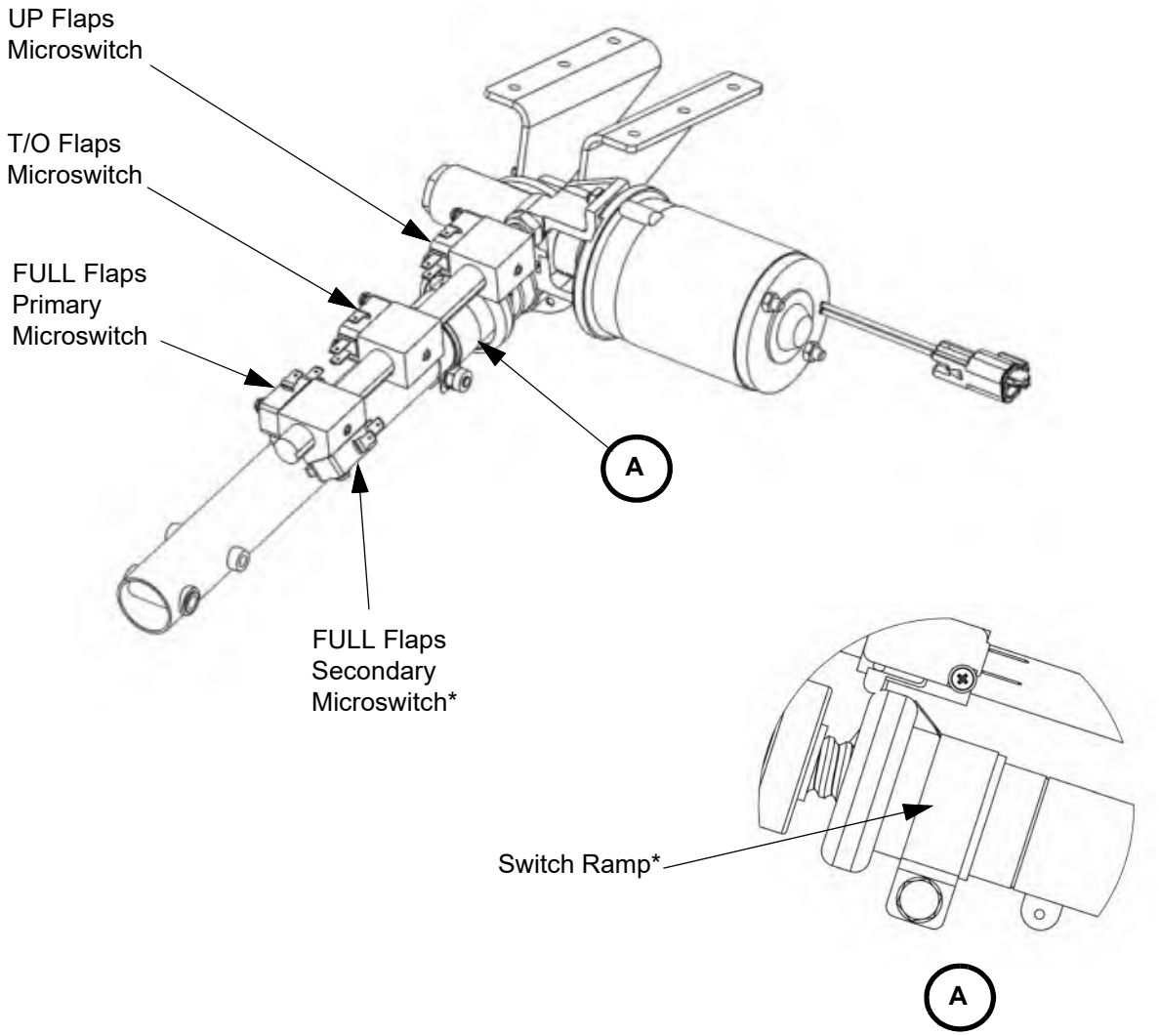

*(SN: K033 and On and K003 - K032 with SB-0034 Only)

Figure 27-50.3: Flap Rigging and Adjustment (Sheet 2 of 3)

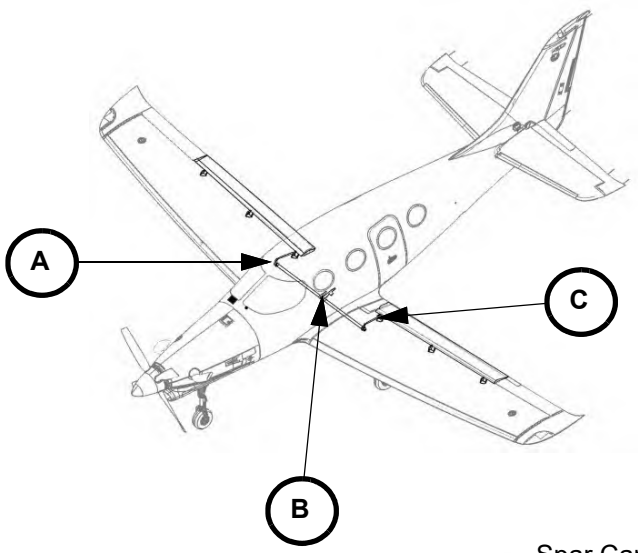

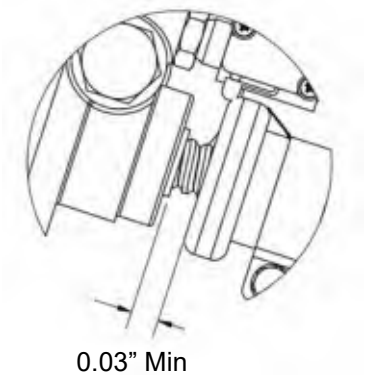

Flaps Full Up

B1

Spar Cap

Make sure the gap between the left and right forks and the spar cap is 0.050” or greater.

Fork

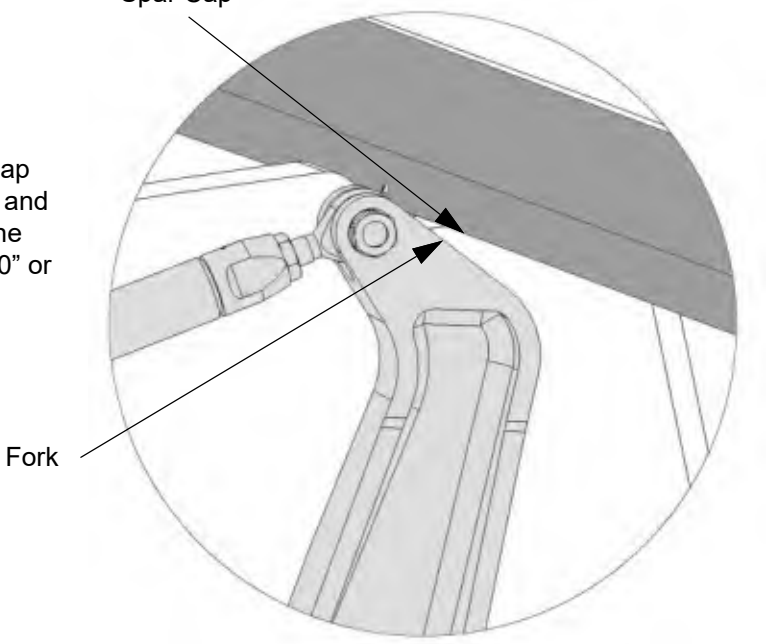

Flaps Full Up
Left Side Shown, Right Side Opposite

A

Figure 27-50.3: Flap Rigging and Adjustment (Sheet 3 of 3)

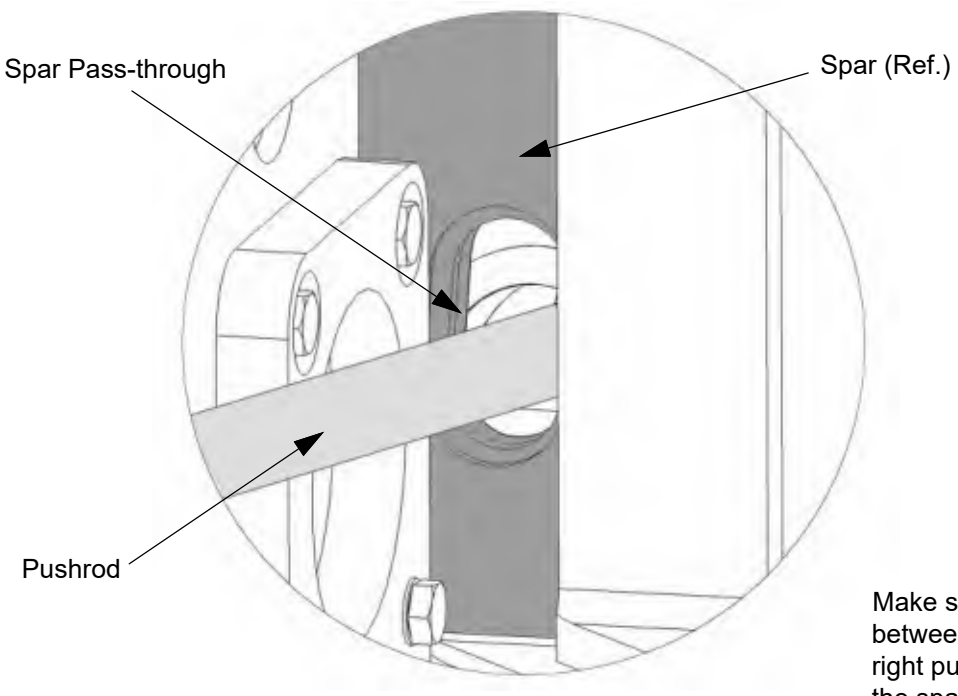

Make sure the gap between the left and right pushrods and the spar pass-through is 0.050” or greater.

C

Flaps Full Down
Right Side Shown, Left Side Opposite

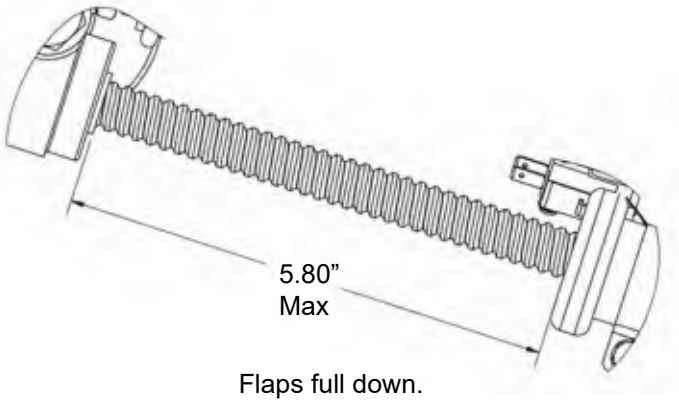

Flaps full down.

B2

I. Inspection

(1) Chafing of the flap skins from contact with the wing skins should be further explored for out of rig conditions.

(2) Inspect for delamination at the trailing edge surface. Refer to Chapter 51 for repair procedures.

(3) Inspect the flaps torque tube for play, binding, and condition.

(4) Inspect the push pull rods and rod ends for freedom of movement, condition, and correct safety.

(5) Verify no cracks in the hinges.

(6) Verify a 0.020” wire will not pass through the witness hole of all rod ends.

(7) Verify correct safety wire and cotter pins installation on all fasteners.

(8) Check the torque and the tapered washers on the two flaps torque tube tapered pins. Replace the washers if they are bottomed out. Ensure the washers are installed with the correct orientation. Torque should be 60 to 85 in-lbs.

(9) Check the torque on the two side bolts next to the tapered pins. Any looseness indicates wear in the inner or outer tube assemblies.

(10) Inspect for foreign object debris.

(11) Check the flaps motor worm gear assembly for lubrication, looseness, signs of galling, or binding.

(12) Lubricate the flaps motor worm gear with Lubriplate 130 (refer to Chapter 12 instructions and at specified intervals).

(13) Do a functional check of the flap control system.

(a) Operate the flap control system from the flight deck through each flap setting and back to flaps up.

(b) Confirm the flap control system is free from jamming, binding, or chattering.

(c) Check flaps travels (12°+/-2° Take-Off and 42.8°-43.4° Full).

Figure 27-50.4: Flap Inspection

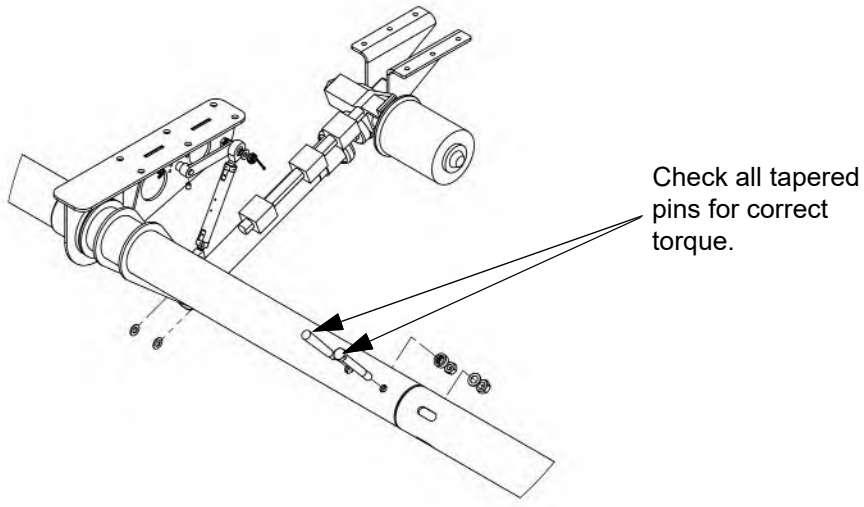

J. Flap Secondary Full Limit Switch Check (SN: K033 and On and K003 - K032 with SB-0034 Only)

Note: Do this check in conjunction with the flap travel checks.

(1) Connect a ground power unit to the airplane (refer to Chapter 24-40).
(2) Remove the airplane belly panels (refer to Chapter 57-10).
(3) Set the BATT 1 and BATT 2 switches to ON.
(4) Put the flaps in the UP or T/O position.

CAUTION: Make sure the FLAPS circuit breaker is open when disconnecting the microswitch.

(5) Pull the FLAPS CTRL circuit breaker.
(6) Disconnect the electric connection from the primary limit switch.
(7) Reset the FLAPS CTRL circuit breaker.
(8) Move the flaps to the FULL position.

Note: The FLAPS FAIL CAS message will appear with the primary limit switch disconnected.

(9) Pull the FLAPS CTRL circuit breaker.
(10) Connect the electric connection to the primary limit switch.
(11) Reset the FLAPS CTRL circuit breaker.
(12) Move the flaps to the UP position, make sure the FLAPS FAIL CAS message does not appear.
(13) Set the BATT 1 and BATT 2 switches to OFF.
(14) Disconnect the ground power unit from the airplane (refer to Chapter 24-40).
(15) Install the airplane belly panels (refer to Chapter 57-10).

Figure 27-50.5: Flap Secondary Full Limit Switch Check

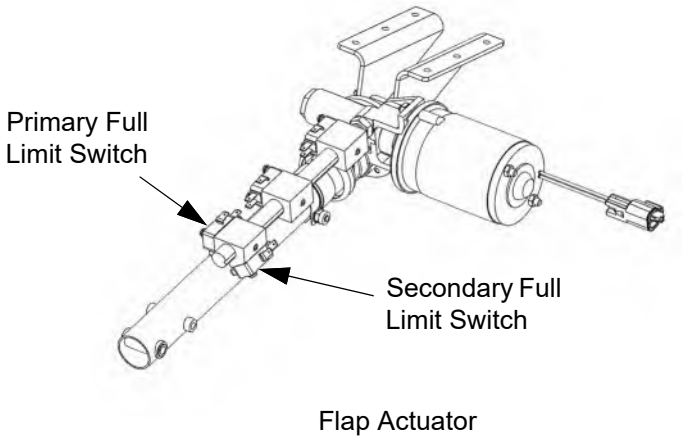

K. Flap Operational Check

(1) Connect a ground power unit to the airplane (refer to Chapter 24-40).

(2) Set the BATT 1 and BATT 2 switches to ON.

(3) Open the FLAPS and FLAP CTRL circuit breakers.

(4) Move the FLAPS control switch on the instrument panel, make sure there is no motion of the flaps.

(5) Reset the FLAPS circuit breaker.

(6) Move the FLAPS control switch.

(7) Make sure there is no motion of flaps.

(8) Open the FLAPS circuit breaker.

(9) Reset the FLAP CTRL circuit breaker.

(10) Make sure the flaps position is reported but the flaps do not move when the FLAPS control switch is moved.

(11) Reset the FLAPS and FLAP CTRL circuit breakers.

(12) Verify the motion and deflection of the flaps for UP, T/O, and FULL positions are correct and coincide with the markings on the FLAP CONTROL switch.

(13) Verify the flaps position is indicated on the MFD for each flaps position.

(14) Set the BATT 1 and BATT 2 switches to off.

(15) Disconnect the ground power unit from the airplane (refer to Chapter 24-40).

This Page Intentionally Left Blank

CHAPTER 28

Fuel

This Page Intentionally Left Blank

List of Effective Pages

Chapter/Section	Page Number	Effective Date
28-Title	Page 1	02 Jan 2020
28-Title	Page 2	02 Jan 2020
28-LOEP	Page 1	08 Sep 2026
28-LOEP	Page 2	08 Sep 2026
28-TOC	Page 1	02 Jan 2020
28-TOC	Page 2	02 Jan 2020
28-00	Page 1	13 Apr 2020
28-00	Page 2	13 Apr 2020
28-00	Page 3	02 Jan 2020
28-00	Page 4	02 Jan 2020
28-10	Page 1	02 Jan 2020
28-10	Page 2	02 Jan 2020
28-10	Page 3	02 Jan 2020
28-10	Page 4	02 Jan 2020
28-10	Page 5	16 May 2022
28-10	Page 6	02 Jan 2020
28-10	Page 7	02 Jan 2020
28-10	Page 8	02 Jan 2020
28-10	Page 9	02 Jan 2020
28-10	Page 10	02 Jan 2020
28-10	Page 11	02 Jan 2020
28-10	Page 12	02 Jan 2020
28-10	Page 13	02 Jan 2020
28-10	Page 14	02 Jan 2020
28-20	Page 1	10 Jul 2025
28-20	Page 2	10 Jul 2025
28-20	Page 3	10 Jul 2025
28-20	Page 4	10 Jul 2025
28-20	Page 5	10 Jul 2025
28-20	Page 6	10 Jul 2025
28-20	Page 7	10 Jul 2025
28-20	Page 8	10 Jul 2025
28-20	Page 9	10 Jul 2025
28-20	Page 10	10 Jul 2025
28-20	Page 11	10 Jul 2025
28-20	Page 12	10 Jul 2025
28-20	Page 13	10 Jul 2025
28-20	Page 14	10 Jul 2025
28-20	Page 15	10 Jul 2025

28-20 ..... Page 16 ..... 10 Jul 2025
28-20 ..... Page 17 ..... 10 Jul 2025
28-20 ..... Page 18 ..... 10 Jul 2025
28-20 ..... Page 19 ..... 10 Jul 2025
28-20 ..... Page 20 ..... 08 Sep 2026
28-20 ..... Page 21 ..... 08 Sep 2026
28-20 ..... Page 22 ..... 08 Sep 2026
28-20 ..... Page 23 ..... 10 Jul 2025
28-20 ..... Page 24 ..... 10 Jul 2025
28-20 ..... Page 25 ..... 08 Sep 2026
28-20 ..... Page 26 ..... 08 Sep 2026
28-20 ..... Page 27 ..... 08 Sep 2026
28-20 ..... Page 28 ..... 08 Sep 2026
28-20 ..... Page 29 ..... 10 Jul 2025
28-20 ..... Page 30 ..... 10 Jul 2025
28-20 ..... Page 31 ..... 10 Jul 2025
28-20 ..... Page 32 ..... 10 Jul 2025
28-20 ..... Page 33 ..... 10 Jul 2025
28-20 ..... Page 34 ..... 10 Jul 2025
28-20 ..... Page 35 ..... 10 Jul 2025
28-20 ..... Page 36 ..... 10 Jul 2025
28-20 ..... Page 37 ..... 10 Jul 2025
28-20 ..... Page 38 ..... 10 Jul 2025

28-40 ..... Page 1 ..... 08 Sep 2026
28-40 ..... Page 2 ..... 11 Nov 2020
28-40 ..... Page 3 ..... 11 Nov 2020
28-40 ..... Page 4 ..... 11 Nov 2020

Table of Contents

List of Effective Pages ..... 28-LOEP / Page 1
Table of Contents ..... 28-TOC / Page1

Paragraph **Page Number**

Fuel

1. General ..... 28-00 / Page 1
2. Troubleshooting ..... 28-00 / Page 1

Storage

1. Description ..... 28-10 / Page 1
2. Maintenance Practices ..... 28-10 / Page 1
   - A. Fuel Sump Quick Drain Valve and Sampling Valve ..... 28-10 / Page 1
   - B. Fuel Cap ..... 28-10 / Page 4
   - C. Fuel Tank Vents ..... 28-10 / Page 4
   - D. Fuel Tank Vent Float Valve Assembly ..... 28-10 / Page 4
   - E. Fuel Collector Bay Check Valve ..... 28-10 / Page 9
   - F. Fuel Bay Access Panels ..... 28-10 / Page 11
   - G. Inspection For Leakage ..... 28-10 / Page 14

Distribution

1. Description ..... 28-20 / Page 1
2. Maintenance Practices ..... 28-20 / Page 3
   - A. Fuel Pump ..... 28-20 / Page 3
   - B. Fuel Selector ..... 28-20 / Page 8
   - C. Fuel Filter (Gascolator) ..... 28-20 / Page 20
   - D. Fuel Pressure Transducer ..... 28-20 / Page 25
   - E. Fuel Flow Transducer ..... 28-20 / Page 25
   - F. Fuel Return Solenoid Valve ..... 28-20 / Page 27
   - G. Fuel Blowback Accumulator ..... 28-20 / Page 30
   - H. In-line Pneumatic (P3) Filter ..... 28-20 / Page 32
   - I. Fuel Lines Forward of the Firewall ..... 28-20 / Page 34
   - J. Fuel Lines in the Cabin ..... 28-20 / Page 34

Indicating

1. Description ..... 28-40 / Page 1
2. Maintenance Practices ..... 28-40 / Page 1
   - A. Fuel Probes ..... 28-40 / Page 1

This Page Intentionally Left Blank

FUEL

1. General

The fuel system for the airplane is wet wing fuel tanks, two electric boost pumps, an engine driven fuel pump, fuel sumps, a fuel selector, a shutoff valve, a fuel filter, hoses, lines, and fittings.

Six bays in each wing give approximately 139 US gallons (526 liters) of fuel capacity for a total of 278 US gallons (1052 liters). The inboard fuel bay acts as a header tank with flapper valves. An electric boost pump in each wing provides fuel through a fuel selector that directs fuel from either the left or right wing. The fuel selector has internal logic that automatically switches the fuel delivery from the left and right wings every 2 minutes to balance the system. A fuel tank vent in each wing provides differential atmospheric stability. Capacitance probes in each wing provide fuel quantity information.

Note: Refer to the current revision of the Pratt and Whitney Engine Maintenance Manual for fuel system maintenance procedures for the engine.

2. Troubleshooting

Problem	Probable Cause	Solution
Leak around the fuel filter bowl.	Damaged or worn O-ring. Damaged filter bowl.	Replace the O-ring. Replace the filter bowl if it is damaged.
Leak at the bottom of the filter bowl.	Loose attachment nut or damaged gasket.	Torque the attachment nut. Replace the damaged gasket.
Differential pressure switch will not actuate at the design pressure.	Defective differential pressure switch. Defective seals.	Replace the differential pressure switch.
The fuel filter bowl continues to drain when the fuel selector is set to “OFF”.	Defective fuel selector valve.	Repair or replace the fuel selector valve.
Fuel sump pencil drain is leaking	Spring loaded valve is contaminated with debris.	Open and close the valve multiple times to flush the debris or replace the valve.
Fuel leaking from fuel bay access panels.	De-laminated or split sealant.	Reseal the access panel.
Fuel leaking from the wing skin, non-seam area.	De-laminated wing skin.	Contact Epic Aircraft, LLC for repair instructions.

Problem	Probable Cause	Solution
Fuel line leaking at a fitting.	Fitting loose. Damaged flange or debris present.	Torque the fitting. Remove debris. Replace the fuel line.
Fuel boost pump inoperative.	Bad electrical connection, circuit breaker open, or defective pump.	Close the circuit breaker, test for power at the connector in the wheel well, or replace the defective pump.
Fuel selector “Auto” mode inoperative.	Circuit breaker tripped. Servo, timer, or cam switch malfunction. The servo clutch is loose.	Set circuit breaker. Check servo motor clutch.Check timer for correct operation. Check servo motor for power. Replace any bad parts.
The servo motor rotates without rotating the fuel selector valve.	Servo clutch malfunction.	Replace the servo or adjust the clutch in accordance with the servo manufacturer’s instructions.
“Auto” mode only selects one wing.	The cam switch is misaligned or damaged.	Realign or replace the cam switch.
Noisy operation.	Servo motor wearing out.	Replace the servo motor.
“Auto” mode trips the circuit breaker.	The timer, cam switch, or servo motor are shorted.	Investigate the electrical short then replace any malfunctioning parts.
Excessive force required to manually rotate the fuel selector.	Fuel selector valve failing.	Replace the fuel selector valve.
Excessive play in the fuel selector knob.	The universal union, clevis pin, or knob are loose.	Check knob security. Check attachment at the shaft universal union and the fuel valve.

Figure 28-00.1: Fuel System Schematic

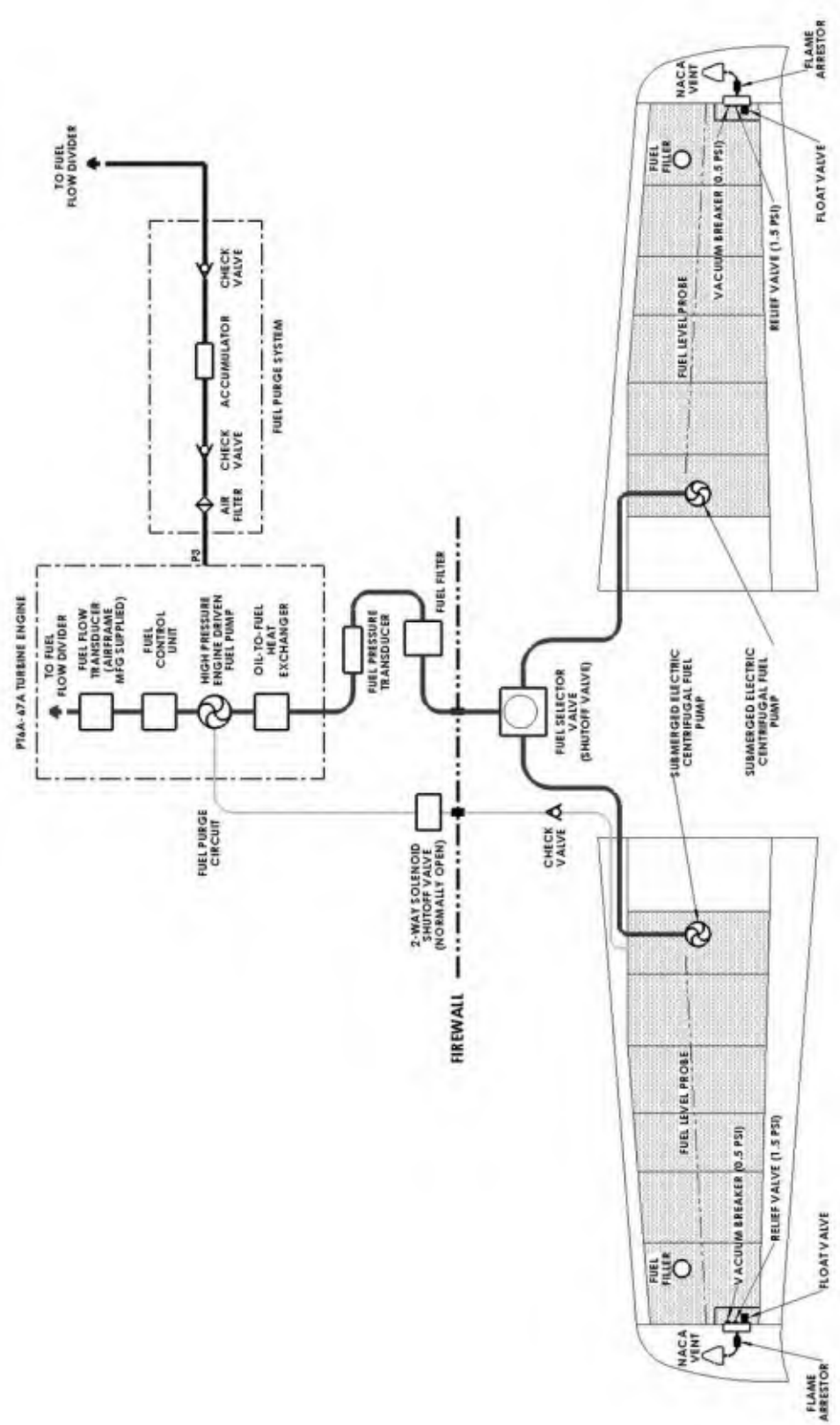

This Page Intentionally Left Blank

STORAGE

1. Description

Fuel storage on the airplane is done using six interconnecting bays of each wing's interior structure as a fuel tank. Each wing is vented and has a capacity of 139 US gallons (526 liters). Each fuel bay has an access panel on the underside of the wing. Fuel flows by gravity from the outboard bays towards the inboard where it is collected for distribution to the engine. The inboard bay has one way flapper valves (slosh valves).

Each wing is filled through a filler port located in the upper wing skin at the outboard fuel bay. The filler port is closed using a cap.

The inboard bay of each wing has a drain for water and contaminant removal.

2. Maintenance Practices

A. Fuel Sump Quick Drain Valve and Sampling Valve

(1) Removal

(a) Defuel the wing of the valve to be removed. Refer to Chapter 12.

(b) Use a pick inserted into the vent hole in the cover to pull the cover off the access panel. The cover is attached to the access panel using 3M CS 3330 tank sealant.

(c) Remove the mounting hardware attaching the inboard header tank access panel, 3RW or 3LW (refer to Chapter 6), to the wing.

(d) Remove any exposed fuel tank sealant between the access panel and the wing.

WARNING: Do not use metallic scrapers that could damage the wing during sealant removal. Plastic scrapers are recommended.

(e) Using firm manual force, aided only with soft plastic wedges if necessary, pry the access panel loose.

(f) Remove the panel.

(g) Remove the drain valve or sampling valve, as required.

(2) Installation

(a) Clean the mounting surfaces for the new valve using isopropyl alcohol.

(b) Install the new drain valve or sampling valve, as required. Wet set the valves using AC 350 B-1/2 tank sealant. Do not let the tank sealant block the fuel escapement castellations on the sampling valve. Torque the retaining nut on the drain valve 200 to 250 in-lbs. Torque the drain cap 110 to 130 in-lbs then install safety wire. Torque the nut on the sampling valve 40 to 60 in-lbs.

(c) On the surface of the wing

(i) Cover the wing around the hole for the access port using two courses of electrical tape to make an inner and outer covering. Leave the tails of the tape so it can be removed easily.

(ii) Use a counter sink in a drill to bore the tape out of the mounting holes for the access panel screws.

(d) Apply duct tape to the center of the outer surface of the access panel to make a handle with the tape.

(e) On the surface of the access panel

(i) Apply two courses of electrical tape to the surface of the access panel that will be visible once the panel is installed. Make tails of the tape so it can be removed easily.

(f) Mix AC 350 B-1/2 tank sealant according to the manufacturer's instructions.

(g) Apply the sealant to the mating surface between the access panel and the wing. It is preferred that the holes have sealant in them when installing the access panel.

(h) Insert the access panel into position.

(i) Attach the access panel to the wing using screws.

(j) Clean the sealant squeeze out using isopropyl alcohol and a clean rag or paper towel.

(k) Clean the sealant squeeze out from around the gap between the wing and the access panel using a tongue depressor or a plastic squeegee.

(l) Wearing latex gloves, smooth the sealant using a finger tip moistened with isopropyl alcohol.

(m) Remove the electrical tape one course at a time starting with the tape installed last.

(n) Clean the wing of any excess sealant using isopropyl alcohol.

(o) Let the sealant fully cure (refer to the sealant manufacturer's instructions).

(p) Refill the wing with fuel then inspect for leaks.

(q) Install the cover over the drain valve using 3M CS 3330 tank sealant. Ensure the vent hole is clear of sealant prior to sealant cure then allow the sealant to fully cure in accordance with the sealant manufacturer's instructions.

Figure 28-10.1: Fuel Sump Drains

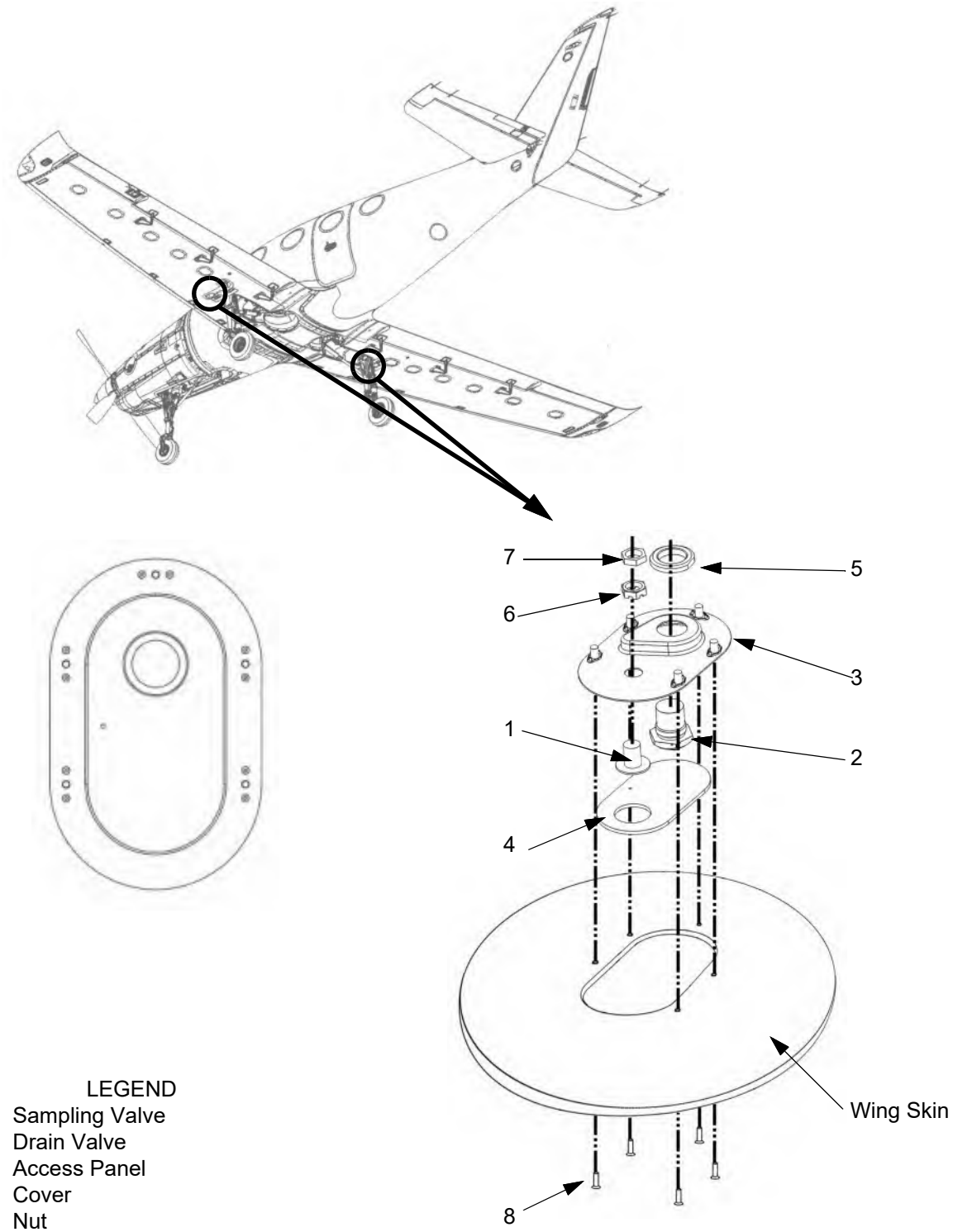

LEGEND

1. Sampling Valve
2. Drain Valve
3. Access Panel
4. Cover
5. Nut
6. Castellated Nut
7. Jam Nut
8. Screw

B. Fuel Cap

The fuel cap flanges are bonded directly to the upper wing skin of the airplane. They cannot be easily removed or replaced and do not require any maintenance. If the fuel cap flanges become damaged or leak contact Epic Aircraft, LLC.

C. Fuel Tank Vents

(1) Removal

(a) Remove the screws attaching the NACA vent to the wing tip.

(b) Pull the NACA vent down then disconnect the vent and by-pass hoses from the tee fitting.

(c) Remove the NACA vent.

(d) Remove the tee and bulkhead fittings.

(2) Installation

(a) Install the bulkhead and tee fittings to the NACA vent. Torque the fitting and nut to 15 ft-lbs ± 3 ft-lbs.

(b) Attach the vent and by-pass hoses to the tee fitting.

(c) Attach the NACA vent to the wing tip.

(3) Testing

(a) Cap the flame arrestor for the test using 1/2 inch cap.

(b) Cap the purge line at wing root fitting using 1/4 inch caps.

(c) Pressurize the wing tanks using air to 1 +.2 psi, verify that relief valves in the vent modules relieve pressure at 0.5 psi.

(d) Remove the vent tube and cap fitting.

(e) Pressurize the wing tanks using air to 1.0-1.5 psi, hold for 5 minutes, verify no loss of pressure.

(f) Remove the caps and re-install fittings after the leak check is complete.

D. Fuel Tank Vent Float Valve Assembly

(1) Removal

(a) Defuel the wing of the valve to be removed. Refer to Chapter 12.

Note: The wing does not need to be completely defueled. Remove only the amount of fuel necessary to bring the fuel level below the bottom of the float valve assembly.

(b) Remove the wing tip (refer to Chapter 57-30).

(c) Remove the eight screws and washers attaching the fuel vent float valve assembly to the wing tip.

(d) Remove the float valve assembly.

(e) Remove the vent and by-pass hoses.

(f) Cut the safety wire then remove the socket head screws attaching the float valve to the manifold.

(g) Remove the float valve.

(2) Installation

(a) Ensure the O-ring is seated correctly between the float valve and the manifold.

Note: Lubricate all O-rings using Parker O-ring lubricant, P/N 884-2.

(b) Attach the float valve to the manifold using socket head screws. Safety wire the screws together ensuring the wire cannot restrict movement and function of the float.

(c) Install fuel tank sealant AC 350 B-1/2 between the wing rib and the back of the float assembly flange then insert the float assembly into the wing tip.

(d) Attach the assembly to the wing tip using washers and screws.

(e) Install the by-pass and vent hoses.

(f) Install the wing tip (refer to Chapter 57-30).

(g) Do a leak test.

(3) 5000 hour Inspection and Replacement of Relief Valve and Vacuum Breaker

(a) Remove the fuel tank vent from the airplane.

(b) Remove the float valve from the fuel tank vent.

(c) Visually inspect the float valve for condition.

(d) Ensure the float moves freely on its pivot point. If it does not move freely replace the float valve.

(e) Remove the vacuum breaker and replace with new.

(f) Remove the relief valve and replace with new.

(g) Install the float valve onto the fuel tank vent using a new o-ring.

(h) Install the fuel tank vent.

(i) Do a leak test.

(4) Leak Testing

(a) Cap the flame arrestor for the test using 1/2 inch cap.

(b) Cap the purge line at wing root fitting using 1/4 inch caps.

(c) Pressurize the wing tanks using air to 1 +.2 psi, verify that relief valves in the vent modules relieve pressure at 0.5 psi.

(d) Remove the vent tube and cap fitting.

(e) Pressurize the wing tanks using air to 1.0-1.5 psi, hold for 5 minutes, verify no loss of pressure.

(f) Remove the caps and re-install fittings after the leak check is complete.

Figure 28-10.2: Fuel Tank Vents (Sheet 1 of 3)

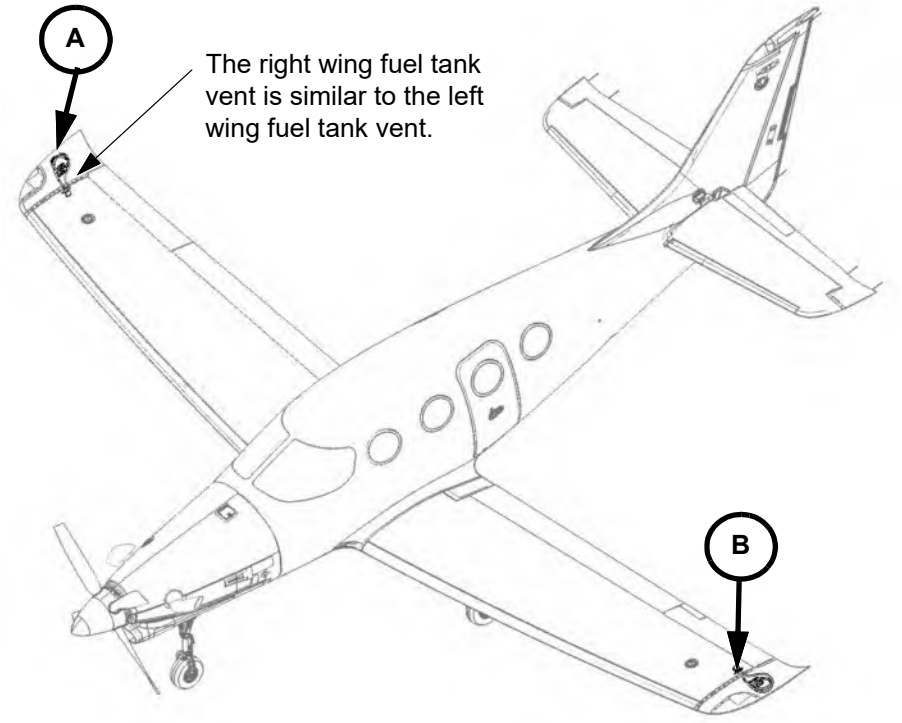

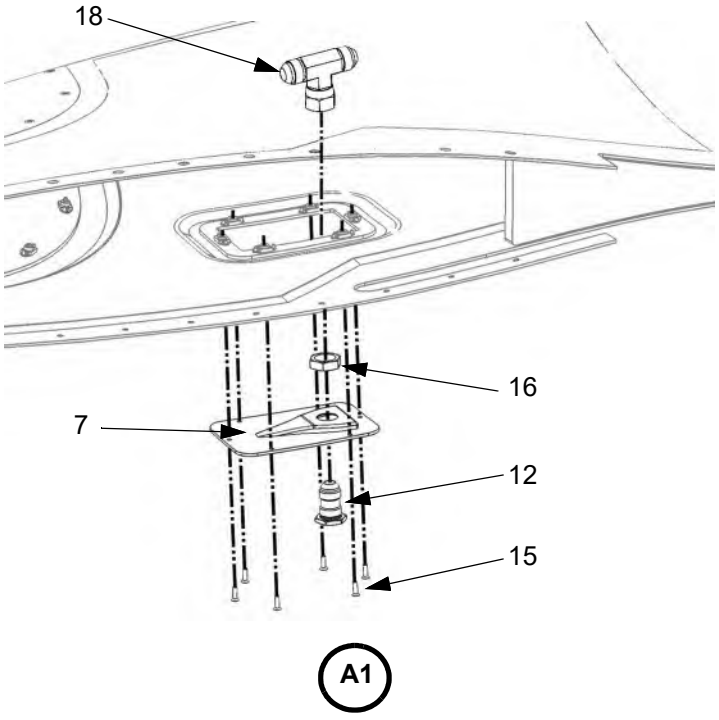

LEGEND

1. Manifold
2. Float Valve
3. Flame Arrestor
4. Relief Valve
5. Vacuum Breaker
6. Cover
7. NACA
8. Hose
9. By-Pass Hose
10. O-Ring
11. Union
12. Bulkhead Fitting
13. Washer Head Screw
14. Socket Head Screw
15. Screw
16. Washer
17. Nut
18. Tee

Figure 28-10.2 Fuel Tank Vents (Sheet 2 of 3)

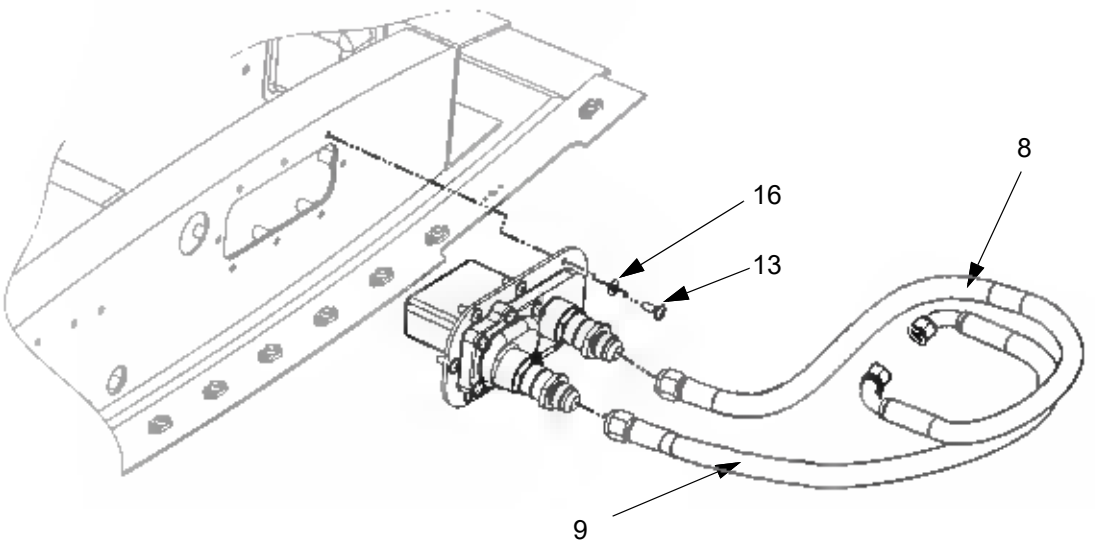

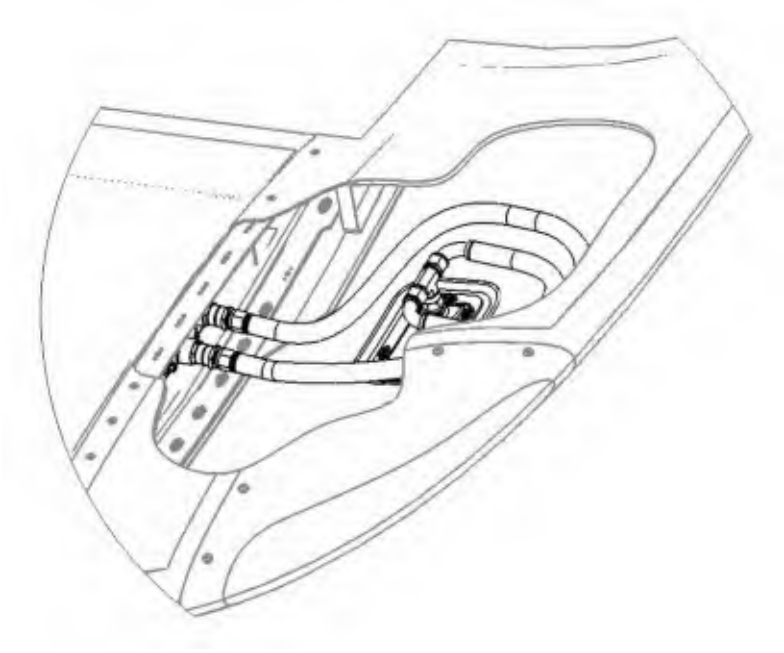

LEGEND

1. Manifold
2. Float Valve
3. Flame Arrestor
4. Relief Valve
5. Vacuum Breaker
6. Cover
7. NACA
8. Hose
9. By-Pass Hose
10. O-Ring
11. Union
12. Bulkhead Fitting
13. Washer Head Screw
14. Socket Head Screw
15. Screw
16. Washer
17. Nut

A2

Figure 28-10.2 Fuel Tank Vents (Sheet3 of 3)

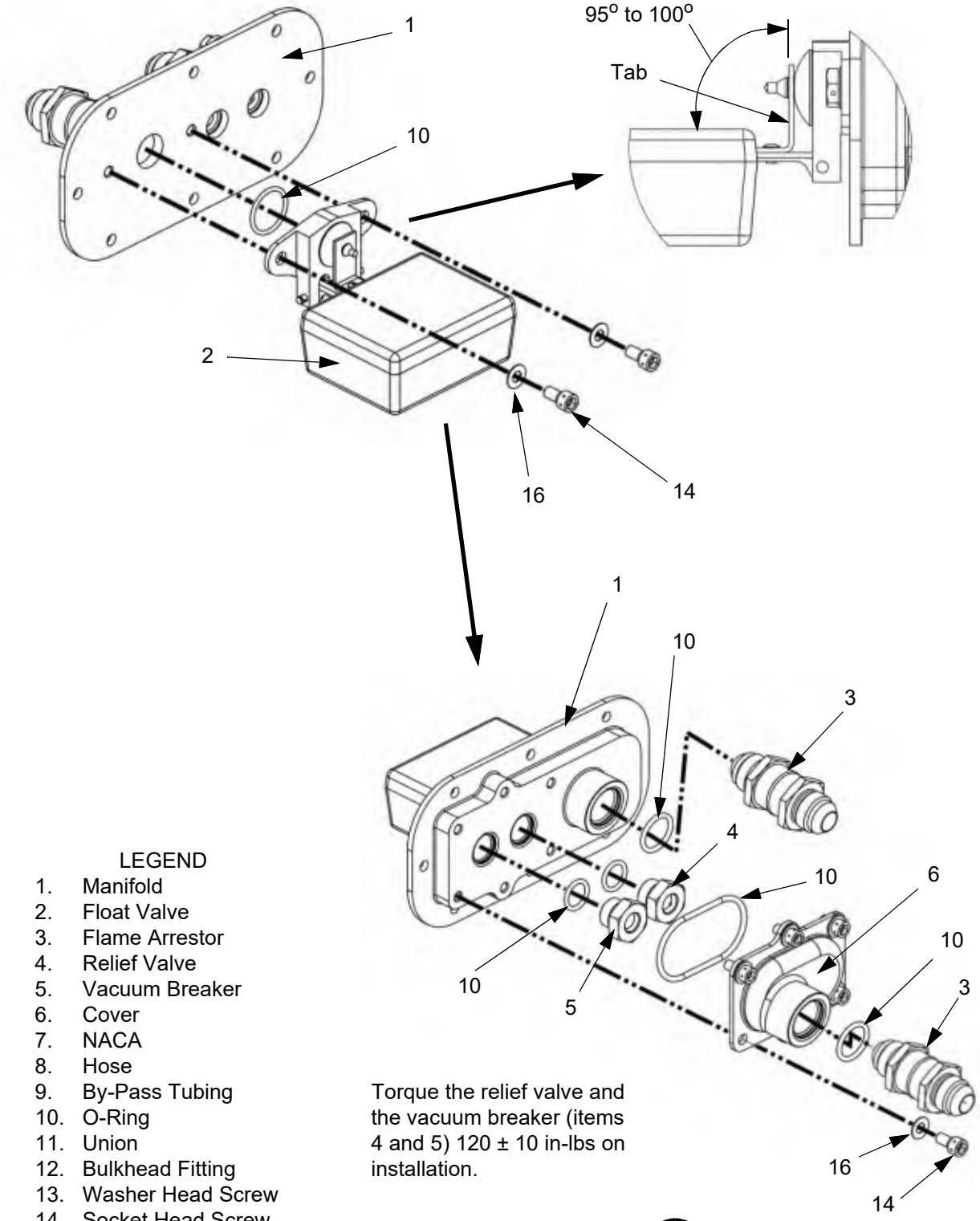

LEGEND

1. Manifold
2. Float Valve
3. Flame Arrestor
4. Relief Valve
5. Vacuum Breaker
6. Cover
7. NACA
8. Hose
9. By-Pass Tubing
10. O-Ring
11. Union
12. Bulkhead Fitting
13. Washer Head Screw
14. Socket Head Screw
15. Screw
16. Washer
17. Nut

Torque the relief valve and the vacuum breaker (items 4 and 5) 120 ± 10 in-lbs on installation.

E. Fuel Collector Bay Check Valve

(1) Removal

(a) Defuel the wing of the valve to be removed. Refer to Chapter 12.

(b) Remove access panels 9RW or 9LW and 10RW or 10LW (refer to Chapter 6 and Section 28-10.2.F. Fuel Bay Access Panels).

(c) Remove the check valve.

(2) Installation

(a) Install the new check valve.

(b) Install the access panels (Section 28-10.2.F. Fuel Bay Access Panels).

(3) Inspection

Inspect all four check valves every 5000 hours.

(a) Defuel the wings. Refer to Chapter 12.

(b) Remove access panels 9RW 9LW, 10RW and 10LW (refer to Chapter 6 and Section 28-10.2.F. Fuel Bay Access Panels).

(c) Visually inspect the check valve for damage and obstructions that could prevent it from fully opening or closing. Manually open the check valve and make sure it operates smoothly and returns to the fully closed position without assistance.

(d) Install the access panels (Section 28-10.2.F. Fuel Bay Access Panels).

Figure 28-10.3: Fuel Collector Bay Check Valves

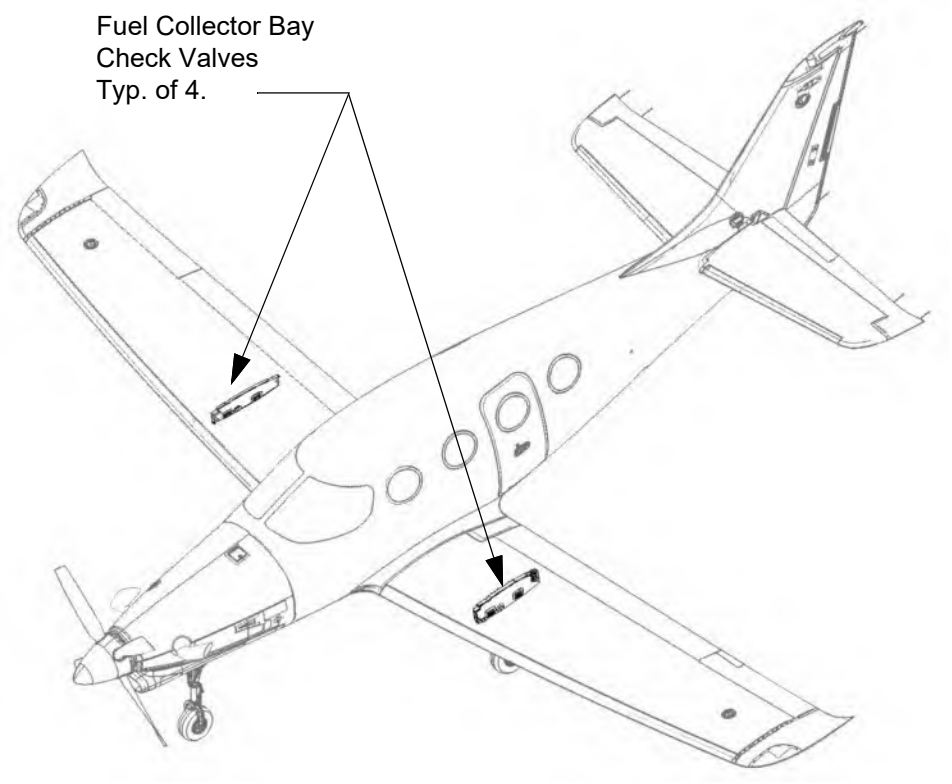

LEGEND

1. Bolt
2. Washer
3. Nut
4. Check Valve

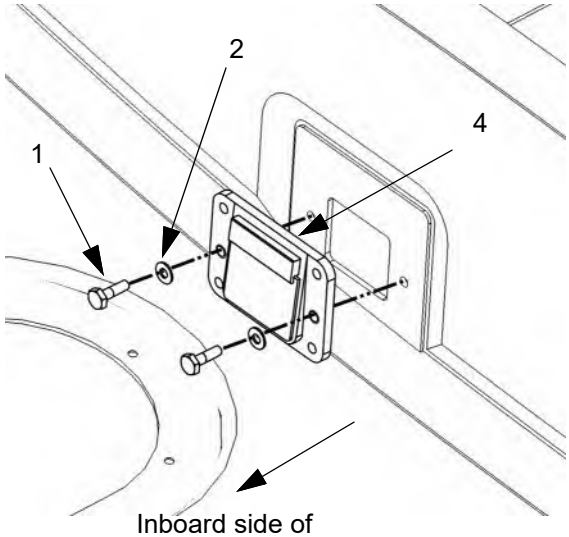

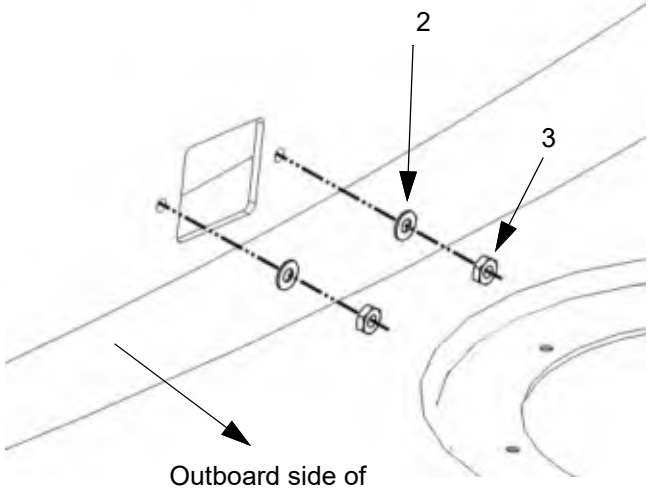

F. Fuel Bay Access Panels

(1) Removal

(a) Defuel the wing of the access panel to be removed.

(b) Remove the mounting hardware attaching the access panel to the wing.

(c) Carefully use a spreader bar between the ground and the panel to apply firm manual force, aided only with soft plastic wedges if necessary to pry the access panel loose.

WARNING: Do not use metallic scrapers that could damage the wing during sealant removal. Plastic scrapers are recommended.

(d) Remove the panel.

(2) Installation

(a) Remove all of the sealant from the access panel and the bonding surface of the wing using a plastic razor blade. Hold the razor blade as flat as possible. Do not sand the access panel or the wing using sandpaper.

(b) Clean the bonding surfaces using isopropyl alcohol.

(c) On the surface of the wing

(i) Cover the wing around the hole for the access port using two courses of electrical tape to make an inner and outer covering. Leave the tails of the tape so it can be removed easily.

(ii) Use a counter sink in a drill to bore the tape out of the mounting holes for the access panel screws.

(d) Apply duct tape to the center of the outer surface of the access panel to make a handle with the tape.

(e) On the surface of the access panel

(i) Apply two courses of electrical tape to the surface of the access panel that will be visible once the panel is installed. Make tails of the tape so it can be removed easily.

(f) Mix AC 350 B-1/2 tank sealant according to the manufacturer's instructions.

(g) Apply the sealant to the mating surface between the access panel and the wing. It is preferred that the holes have sealant in them when installing the access panel.

(h) Install the access panel into position.

(i) Attach the access panel to the wing using screws.

(j) Clean the sealant squeeze out using isopropyl alcohol and a clean rag or paper towel.

(k) Clean the sealant squeeze out from around the gap between the wing and the access panel using a tongue depressor or a plastic squeegee.

(l) Wearing latex gloves, smooth the sealant using a finger tip moistened with isopropyl alcohol.

(m) Remove the electrical tape one course at a time starting with the tape installed last.

(n) Clean the wing of any excess sealant using isopropyl alcohol.

(o) Let the sealant fully cure (refer to the sealant manufacturer's instructions).

(p) Refill the wing with fuel then inspect for leaks.

Figure 28-10.4: Fuel Bay Access Panels

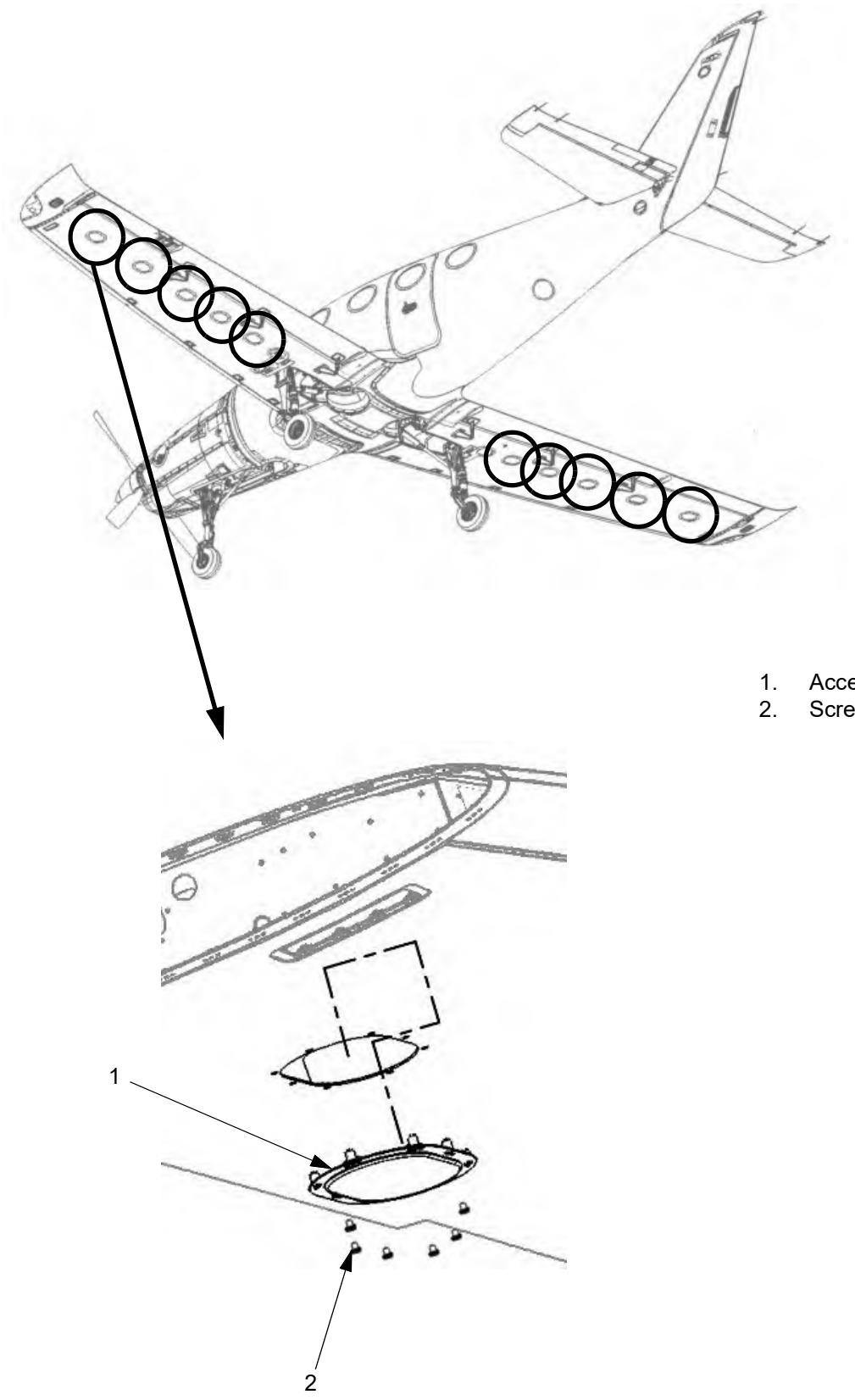

G. Inspection For Leakage

(1) Drain approximately 16 US ounces (473 milliliters) of fuel by volume from each fuel drain to inspect for water and contaminants.

(2) Continue to drain fuel until all water and contaminants are removed from the wing sump.

(3) Inspect each fuel bay access panel for signs of leakage or damage.

(4) Repair due to fuel leakage depends on the severity of the leak. Stains, minor, and heavy seepage may be repaired at the next scheduled inspection. Running seepage must be repaired immediately. Severity of fuel leakage is defined as follows:

Note: Seepage that is not immediately repaired must be inspected before, and immediately after, each flight until it is repaired.

(a) Stain - A slow fuel leak that evaporates soon after it is exposed to the air leaving discoloration on the surface of the airplane.

(b) Minor seepage - The area of discoloration on the airplane skin is less than 1-1/2” inches in diameter.

(c) Heavy seepage - The area of discoloration on the airplane skin is greater than 1-1/2 inches and less than 4 inches in diameter but does not constitute a flight hazard.

(d) Running seepage - The area drips fuel. Fuel will flow and immediately drip after the area has been wiped dry. Running seepage must be repaired before flight. Contact Epic Aircraft, LLC for instructions.

DISTRIBUTION

1. Description

Fuel flows by gravity from the outboard wing storage bays inboard, where it is collected for distribution to the engine. The inboard bays have one way flapper valves to prevent fuel from moving outboard. Two continuous-duty, submerged fuel pumps provide positive fuel pressure from the fuel tanks through the fuel selector and fuel filter to the high-pressure engine-driven fuel pump.

Fuel Pump

The fuel boost pumps are powered by the L FUEL PUMP and R FUEL PUMP circuit breakers, fuel pump control and indication is powered through the L FUEL PUMP CTRL and R FUEL PUMP CTRL circuit breakers. All fuel pump circuit breakers are on the left circuit breaker panel. L FUEL PUMP and R FUEL PUMP switches are located on the left switch panel.

Fuel Selector

The fuel selector valve is mounted on the pedestal between the crew seats. The fuel selector has LEFT, RIGHT, and OFF positions and can be controlled manually by the crew or by the fuel auto select system. The fuel selector valve is coupled to a servo motor and controller to give automatic switching between the fuel from the left and right wings. The FUEL AUTO SEL switch on the left switch panel is used to control the system. When the FUEL AUTO SEL switch is set to ON, the fuel selector valve switches between wings in 2 minute intervals. Auto select mode can be overridden by manually turning the fuel selector knob to the desired position. The servo is controlled by the fuel auto-select controller that is mounted in the pedestal and powered through the FUEL AUTO SEL circuit breaker on the left circuit breaker panel.

Fuel Filter

A firewall mounted fuel filter (gascolator) mounted between the fuel boost pumps and engine drive fuel pump provides up to 40 micron filtration. The filter has bypass capability in the event of blockage. A differential pressure circuit outputs to the GEA 71 to give the pilot a FUEL FILT BLOCK CAS indication if the filter bypasses.

Fuel Pressure

Fuel Pressure is measured just downstream from the fuel filter by a transducer mounted on a tee-fitting on the fuel filter. The transducer is powered by the ENG INST circuit breaker through the GEA 71. The transducer provides the pressure indication in psi as FPRESS on the MFD and the FUEL PRESS LOW CAS message when the pressure is less than 5 psi.

Fuel Flow

Fuel flow is measured by the fuel flow transducer located between the engine FCU and the engine fuel nozzles. The fuel flow meter outputs to the GEA 71 and provides FFLOW in gallons per hour on the MFD. With the engine running at Ng of 70% to 71%, fuel flow (FFLOW) should show on the MFD as 25 to 40 gallons per hour.

Fuel Return Solenoid Valve

A fuel purge circuit returns fuel vapor from the engine high-pressure engine-driven fuel pump through a fuel return solenoid valve to the left fuel tank. The valve is opened during engine start to prevent pump cavitation and closes automatically when the starter switches to generator mode.

Blowback Accumulator

A blowback accumulator, mounted on the right side of the engine, stores P3 air used to purge the engine fuel manifold. As the engine is shut down, the P3 air stored in the blowback accumulator will blow residual fuel out of the fuel manifold into the combustion chamber where it will be burnt, eliminating the need for an EPA can.

P3 Filter

The in-line pneumatic (P3) filter is a one piece welded unit and is installed in the bleed air manifold upstream of the blowback accumulator to filter P3 air. During engine operation, P3 air is directed through the in-line filter and check valve into the blowback accumulator. The tee fitting the P3 filer is mounted to also directs the P3 air to the hydraulic system and the door seal.

2. Maintenance Practices

A. Fuel Pump

(1) Removal

(a) Set the BATT 1 and BATT 2 switches to off.

(b) Pull the L FUEL PUMP and R FUEL PUMP circuit breakers.

(c) Disconnect external electrical power from the airplane (refer to Chapter 24-40).

(d) Make sure the fuel selector is in OFF.

(e) De-fuel the wing(s), refer to Chapter 12-20.

(f) Remove fuel bay access panels 3RW and 9RW(for the right fuel pump) or 3LW and 9LW(for the left fuel pump) (refer to Chapter 6-00 and 28-10).

(g) Disconnect the fuel (fwd) hose from the fuel pump.

CAUTION: Use only non-metallic scrapers, metallic scrapers that could damage the wing during sealant removal.

(h) Remove the sealant around the fuel pump pad using non-metallic scrapers.

(i) Remove the (3) screws that attach the pump pad to the wing.

CAUTION: Use extreme caution to not damage the carbon plies when separating the fuel pump pad from the wing skin.

(j) Carefully separate the pad from the wing skin using only no-metallic scrapers and tools.

(k) Disconnect the harness (aft) hose from the fuel pump to allow the wire harness to be pulled through the hose.

(l) Disconnect the fuel pump wiring connector in the wheel well. Identify the wires for re-installation and un-pin the wires from the electrical connector.

(m) Attach a line to the pump wiring in the wheel well then pull the wiring through the hose.

Note: Use cord or string for the pull line so the hose lining is not damaged when removing electrical wiring.

(n) Leave the line in place for installation of the wire harness.

(o) Remove the fuel pump and pad from the airplane.

(p) Remove (4) nuts, washers, and screws that attach the pump to the pad.

Note: The screws are wet installed in the pad.

(q) Remove the pump from the pad.

(r) If necessary, remove the reducer fittings from the pump. Do not remove the blue AN fitting from the fuel pump.

(2) Installation

Note: AC 350 or CS 3204 are both acceptable sealants. B-2 is recommended for longer working time.

(a) Clean all old sealant from the mounting surface on the pad. Make sure the nutplates on the pad are fully covered in sealant.

(b) Thoroughly clean the mounting surfaces of the pad, pump, and wing using isopropyl alcohol.

(c) Put the pump in position on the pad. Wet install the (4) screws with sealant and install the washers and nuts Torque the nuts to 20 - 25 in-lbs.

Note: Apply sealant to the shanks of the screws only. Make sure the threads and head are clean.

(d) If removed, install the reducer fittings in the pump. Lubricate the male threads with petrolatum or lubricant conforming to MIL-PRF-83483 and torque as follows:

(i) Wiring hose reducer: 110 - 130 in-lbs.

(ii) Fuel hose reducer: 650 - 700 in-lbs.

(e) Apply sealant to the mounting surface on the pad and put the pump/pad assembly in position on the mounting surface in the wing.

(f) Install the (3) screws that attach the pump to the wing and torque the screws to 20 - 25 in-lbs.

(g) Pull the electrical wires from the pump through the harness (aft) hose into the wheel well.

(h) Re-pin the electrical connector as follows:.

Location	Connector	Pin A	Pin B	Pin C
Right Fuel Pump	J167	Red Wire	Blue Wire	NC
Left Fuel Pump	J168	Red Wire	Blue Wire	NC

(i) Connect the harness (aft) hose to the pump and torque the b-nut to 450 - 500 in-lbs.

(j) Connect the fuel line to the pump and torque the b-nut to 900 - 1000 in-lbs.

(k) Let the sealant fully cure (refer to the sealant manufacturer's instructions).

CAUTION: The sealant must be fully cured before refueling the wing or operation of the fuel system.

(l) Reset the L FUEL PUMP and R FUEL PUMP circuit breakers then set the BATT 1 and BATT 2 switches to ON.

CAUTION: Do not operate the pump for more than two seconds.

(m) Start the pump briefly to make that it operates.

(n) Pull the L FUEL PUMP and R FUEL PUMP circuit breaker then set the BATT 1 and BATT 2 switches to OFF.

(o) Install the access panels, refer to Chapter 28-10.

(p) Reset the L FUEL PUMP and R FUEL PUMP pump circuit breakers.

(q) Refuel the wing(s) and leak check the access panels and pump mounting screws.

(r) Connect external electrical power to the airplane (refer to Chapter 24-40).

(s) Set the BATT 1 and BATT 2 switches to ON.

(t) If the left fuel pump was replaced, do the steps that follow:

(i) Set the fuel selector to L.
(ii) Set the L FUEL PUMP switch to ON.
(iii) Make sure the FPRES indication on the MFD is approximately 10-20 psi.
(iv) Set the L FUEL PUMP switch to off.
(v) Set the fuel selector to OFF.

(u) If the right fuel pump was replaced, do the steps that follow:

(i) Set the fuel selector to R.
(ii) Set the R FUEL PUMP switch to ON.
(iii) Make sure the FPRES indication on the MFD is approximately 10-20 psi.
(iv) Set the R FUEL PUMP switch to off.
(v) Set the fuel selector to OFF.

(v) Set the BATT 1 and BATT 2 switches to off.

(w) Disconnect external electrical power from the airplane (refer to Chapter 24-40).

Figure 28-20.1: Electric Fuel Pumps (Sheet 1 of 2)

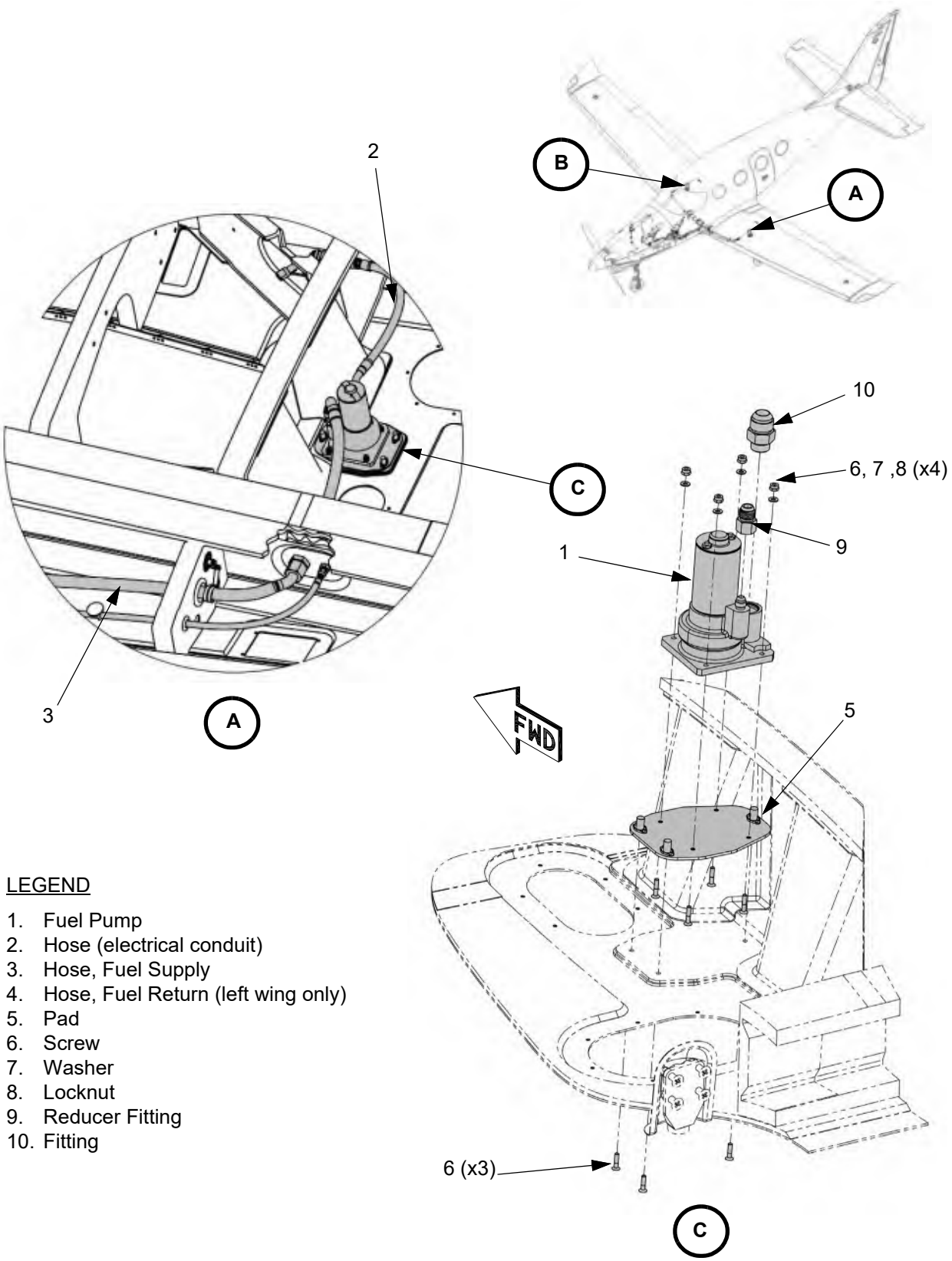

LEGEND

1. Fuel Pump
2. Hose (electrical conduit)
3. Hose, Fuel Supply
4. Hose, Fuel Return (left wing only)
5. Pad
6. Screw
7. Washer
8. Locknut
9. Reducer Fitting
10. Fitting

Figure 28-20.1: Electric Fuel Pumps (Sheet 2 of 2)

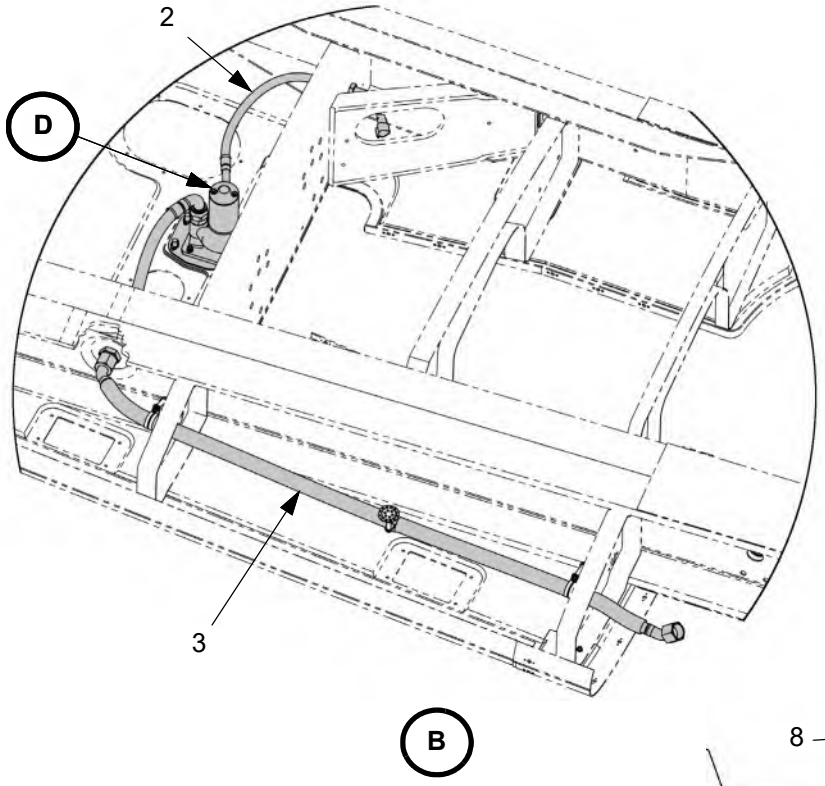

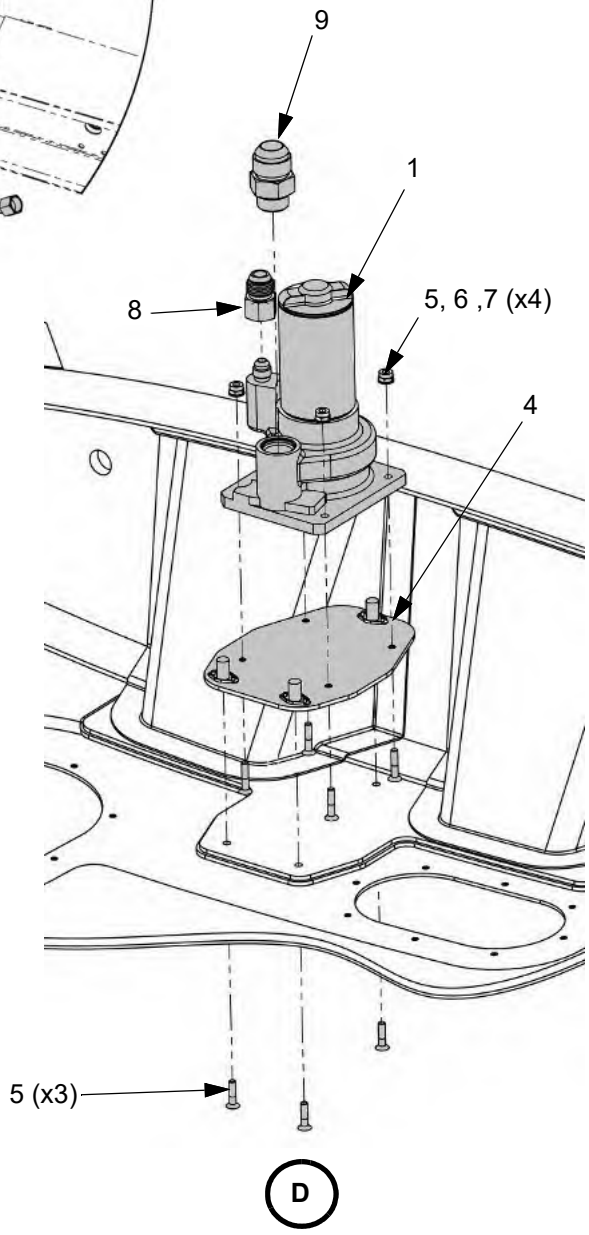

LEGEND

1. Fuel Pump
2. Hose (electrical conduit)
3. Hose, Fuel Supply
4. Pad
5. Screw
6. Washer
7. Locknut
8. Reducer Fitting
9. Fitting

B. Fuel Selector

(1) Servo

(a) Removal

(i) Pull the FUEL AUTO SEL circuit breaker.
(ii) Set the BATT 1 and BATT 2 switches to off.
(iii) Disconnect external electrical power from the airplane (refer to Chapter 24-40).
(iv) Remove the pedestal finish panel (refer to Chapter 25-10).
(v) Remove the control lever friction knobs.
(vi) Remove the screw that attaches the fuel selector knob to the drive tube, then remove the fuel selector knob.
(vii) Disconnect the fuel selector light plate electrical connector (J477). then carefully lift the light plate/spacer assembly from the drive tube.
(viii) Remove the bolt, washer, (2) screws, dimpled washers, washers, and locknuts that attach the fuel selector trim panel to the power quadrant trim panel and remove the fuel selector trim panel.
(ix) Remove the nut, washers, and bolt that attach the drive tube to the universal joint.
(x) (SN: K014, K086 and On) Remove the (2) bolts and washers that attach the AutoThrottle servo bracket to the upper fuel selector shaft bracket.
(xi) While supporting the fuel selector shaft assembly, remove the (4) bolts and washers that attach the fuel selector shaft assembly to the aft yoke access panel then remove the fuel selector shaft assembly, spring, and nylon spacer.
(xii) Remove the center console access covers 1C, 2C, 1LC, and 1RC (refer to Chapter 6-00).
(xiii) Remove the (2) screws that attach the chain tensioner to the chain cover then remove the chain tensioner.
(xiv) Disconnect the switch plate electrical connector (P442).
(xv) Remove the (5) bolts and washer that attach the switch plate to the close-out and remove the switch plate.

Note: It may be necessary to actuate the switch arms to clear the switch cam(s) when removing the switch plate.

(xvi) Remove (4) screws and washers that attach the chain covers to the close-out and servo support bracket.
(xvii) Disconnect the servo electrical connector (P348).
(xviii) Remove the (4) bolts and washers that attach the servo to the mount.
(xix) With the servo loose, remove the chain from the drive sprocket then remove the servo.

(b) Installation

(i) Thoroughly coat the chain with Miller Stephenson PTFE Release Agent dry film lubricant. Allow the dry film lubricant to dry prior to installing the servo.

(ii) Put the servo in loosely in position on the mount and wrap the chain around the sprocket.
(iii) Install the (4) bolts and washers that attach the servo to the mount and torque the bolts to 20 - 25 in-lbs.
(iv) Put the chain covers in position and install the (4) screws and washers that attach the chain covers to the closeout and servo support bracket. Torque the screws to 12 - 15 in-lbs.
(v) Put the switch plate in position and install the (5) bolts and washers that attach the switch plate to the closeout and torque the bolts to 20 - 25 in-lbs.

Note: It may be necessary to actuate the switch arms to clear the switch cam(s) when installing the switch plate.

(vi) Connect the switch plate electrical connector (P442).
(vii) Install the chain tensioner with the (2) screws. Torque the screws to 12 - 15 in-lbs.

Note: Make sure a minimum 0.100" clearance is maintained between the spring on the chain tensioner and the microswitch terminals after final installation of the chain tensioner assembly. If necessary, loosen the hook end nuts and re-adjust spring alignment to correct the position during final re-tightening of the hook end nuts.

(viii) Install the center console access covers 1C, 2C, 1LC, and 1RC (refer to Chapter 6-00).
(ix) Put the nylon spacer and spring in the drive tube then put fuel selector shaft assembly in position on the universal joint. While holding the fuel selector shaft assembly on position, install the (4) bolts and washers that attach the fuel selector shaft assembly to the aft yoke access panel. Torque the bolts to 20 - 25 in-lbs.
(x) (SN: K014, K086 and On) Install the (2) bolts and washers that attach the AutoThrottle servo bracket to the upper fuel selector shaft bracket. Torque the bolts to 20 - 25 in-lbs.
(xi) Install the bolt, washers, and nut that attach the drive tube to the universal joint. Torque the nut to 34 in-lbs.
(xii) Put the fuel selector trim panel in position and install the (2) screws, dimpled washers, washers, and locknuts that attach the fuel selector trim panel to the power quadrant trim panel. Torque the nuts to 12 - 15 in-lbs.
(xiii) Install the bolt and washer that attach the fuel selector trim panel to the fuel selector bracket. Torque the bolt to 20 - 25 in-lbs.
(xiv) Install the control lever friction knobs and torque the socket head screws to 7 - 9 in-lbs.
(xv) Put the lighted panel/spacer assembly on the drive tube.
(xvi) Put the fuel selector knob on the drive tube.

(xvii) Install the screw that attaches the knob to the drive tube and torque the screw to 7 - 9 in-lbs.
(xviii) Connect the fuel selector lighted panel electrical connector (J477).
(xix) Install the pedestal finish panel (refer to Chapter 25-10).
(xx) Reset the FUEL AUTO SEL circuit breaker.

(c) Operational Check:

(i) Connect external electrical power to the airplane (refer to Chapter 24-40).
(ii) Set the BATT 1 and BATT 2 switches to ON.
(iii) Set the fuel selector to the LEFT position.
(iv) Set the FUEL AUTO SEL switch to ON.
(v) Make sure the AUTO FUEL OFF caution extinguishes.
(vi) Set the L FUEL PUMP switch to ON.
(vii) Make sure the FPRES indication on the MFD is approximately 10-20 psi.
(viii) Set the R FUEL PUMP switch on ON and make sure the fuel pressure indication does not increase.
(ix) Set the R FUEL PUMP switch to off.
(x) Set the L FUEL PUMP switch to off.
(xi) Make sure the fuel selector switches to the RIGHT tank position in approximately 2 minutes. The selector knob should line up with R on the fuel selector and take approximately 5 seconds to transition.
(xii) Set the R FUEL PUMP switch to ON.
(xiii) Make sure the FPRES indication on the MFD is approximately 10-20 psi.
(xiv) Set the L FUEL PUMP switch on ON and make sure the fuel pressure indication does not increase.
(xv) Set the L FUEL PUMP switch to off.
(xvi) Set the R FUEL PUMP switch to off.
(xvii) Make sure the fuel selector switches to the LEFT tank position in approximately 2 minutes. The selector knob should line up with L on the fuel selector and take approximately 5 seconds to transition.
(xviii) Verify correct and smooth operation of the fuel selector through 3 complete back-and-forth cycles.
(xix) Set the FUEL AUTO SEL switch to off.
(xx) Make sure the AUTO FUEL OFF caution illuminates.
(xxi) Set the fuel selector to the OFF position.
(xxii) Set the BATT 1 and BATT 2 switches to off.
(xxiii) Disconnect external electrical power from the airplane (refer to Chapter 24-40).

(2) Selector Valve

(a) Removal

(i) Set the BATT 1 and BATT 2 switches to off.
(ii) Pull the FUEL AUTO SEL circuit breaker.
(iii) Disconnect external electrical power from the airplane (refer to Chapter 24-40).
(iv) Make sure the fuel selector is set to OFF.
(v) De-fuel the left and right wings, refer to Chapter 12-20.

(vi) Remove the Servo, refer to Chapter 28-20.2.J.

CAUTION: Damage will occur to the selector valve if the shaft is rotated or if the shaft is side-loaded when it is not fully installed in the aircraft.

(vii) Remove the screw, washers, and nut that attach the universal joint to the selector valve shaft and remove the universal joint.
(viii) Remove the switch cam/sprocket assembly from the selector valve shaft.
(ix) Cut the safety wire and remove the (3) bolts and washers that attach the selector valve to the closeout panel.
(x) Remove the (5) screws and washers and (2) bolts and washer that attach the closeout panel to the enclosure and remove the closeout panel.

Note: The closeout panel is sealed on with RTV 100.

(xi) Disconnect the fuel lines from the fuel selector valve and remove the fuel selector valve from the airplane.
(xii) Cap and plug all open lines and fittings.

(b) Installation

CAUTION: Damage will occur to the selector valve if the shaft is rotated or if the shaft is side-loaded when it is not fully installed in the aircraft.

(i) Put the selector valve in position and connect the fuel line b-nuts.
(ii) Torque the b-nuts to 460 - 500 in-lbs.
(iii) Clean any remaining RTV from the mating surfaces of the closeout panel and enclosure and clean with isopropyl alcohol.
(iv) Apply RTV 100 to the mating surface of the closeout panel and enclosure. Make sure to thoroughly cover the surface.
(v) Put the closeout panel in position on the enclosure. Use caution not to side-load the selector valve shaft when installing the closeout panel.
(vi) Install the (5) screws and washers and (2) bolts and washer that attach the closeout panel to the floor structure. Torque the bolts to 20 - 25 in-lbs and the screws to 12 - 15 in-lbs.
(vii) Put the universal joint in position on the selector valve shaft.
(viii) Install the screw, washers, and nut that attach the universal joint to the selector valve shaft and torque the nut to 34 in-lbs.
(ix) Fuel the left and right wings, refer to Chapter 12-20.
(x) Install the Servo and do the Servo Operational Check, refer to Chapter 28-20.2.I.
(xi) Leak check the selector valve.

(3) Limit Switches

(a) Removal

(i) Set the BATT 1 and BATT 2 switches to off.
(ii) Pull the FUEL AUTO SEL circuit breaker.
(iii) Disconnect external electrical power from the airplane (refer to Chapter 24-40).
(iv) Remove the pedestal finish panel (refer to Chapter 25-10.
(v) Remove the control lever friction knobs.
(vi) Remove the screw that attaches the fuel selector knob to the drive tube, then remove the fuel selector knob.
(vii) Disconnect the fuel selector light plate electrical connector (J477). then carefully lift the light plate/spacer assembly from the drive tube.
(viii) Remove the bolt, washer, (2) screws, dimpled washers, washers, and locknuts that attach the fuel selector trim panel to the power quadrant trim panel and remove the fuel selector trim panel.
(ix) Remove the center console access covers 1C, 2C, 1LC, and 1RC (refer to Chapter 6-00).
(x) Remove the nut, washers, and bolt that attach the drive tube to the universal joint.
(xi) While supporting the fuel selector shaft assembly, remove the (4) bolts and washers that attach the fuel selector shaft assembly to the aft yoke access panel then remove the fuel selector shaft assembly, spring, and nylon spacer.
(xii) Remove the center console access panels 1C, 1LC, and 1RC (refer to Chapter 6-00).
(xiii) Disconnect the electrical connectors from the switch being removed. Identify the wires for installation.
(xiv) Remove the screws, washers, and nuts that attach the switch to the switch plate then remove the switch.

(b) Installation

(i) Apply Loctite™ 242 to the switch attachment screws.
(ii) Put the switch in position on the switch plate and install the screws, washers, and nuts finger tight.
(iii) Connect the electrical connectors to the switch.

CAUTION: Do not over-torque the limit switches.

(iv) LEFT/ RIGHT Switch Adjustment:

(1) Adjust the left/right tank fuel-on microswitches by aligning the index mark on the cam lobe, centerline of the microswitch roller, and the pointer on the mounting plate then pushing the microswitch roller against the cam lobe until the switch activates. Do not push the switches beyond the activation point. Make sure the microswitches do not bottom out by rotating the cam lobes throughout their full range of contact with the microswitches. The left tank uses the left-side microswitch and top cam. The right tank uses the right-side microswitch and bottom cam. Torque the limit switch screws to 3.6 - 4.4 in-lbs.

(v) OFF Switch Adjustment:

(1) Adjust the fuel-off microswitches by aligning the index mark on the cam lobe, centerline of the microswitch roller, and the pointer on the mounting plate, with the corresponding cam lobe (top microswitch uses the top cam, bottom microswitch uses the bottom cam) then pushing the microswitch roller against the cam lobe until the switch activates. Ensure not to push the switch beyond the activation point. Ensure the microswitches do not bottom out by rotating the cam lobes throughout their full range of contact with the microswitches. Torque the limit switch screws to 3.6 - 4.4 in-lbs.

(vi) Install the center console access panels 1C, 1LC, and 1RC (refer to Chapter 6-00).

(vii) Put the nylon spacer and spring in the drive tube then put fuel selector shaft assembly in position on the universal joint. While holding the fuel selector shaft assembly on position, install the (4) bolts and washers that attach the fuel selector shaft assembly to the aft yoke access panel. Torque the bolts to 20 - 25 in-lbs.

(viii) Install the bolt, washers, and nut that attach the drive tube to the universal joint. Torque the nut to 34 in-lbs.

(ix) Put the fuel selector trim panel in position and install the (2) screws, dimpled washers, washers, and locknuts that attach the fuel selector trim panel to the power quadrant trim panel. Torque the nuts to 12 - 15 in-lbs.

(x) Install the bolt and washer that attach the fuel selector trim panel to the fuel selector bracket. Torque the bolt to 20 - 25 in-lbs.

(xi) Install the control lever friction knobs and torque the socket head screws to 7 - 9 in-lbs.

(xii) Put the lighted panel/spacer assembly on the drive tube.

(xiii) Put the fuel selector knob on the drive tube.

(xiv) Install the screw that attaches the knob to the drive tube and torque the screw to 7 - 9 in-lbs.

(xv) Connect the fuel selector lighted panel electrical connector (J477).

(xvi) Install the pedestal finish panel (refer to Chapter 25-10).

(xvii) Do the Servo Operational Check, refer to Chapter 28-20.2.I(c).

Figure 28-20.2: Fuel Selector Valve (Sheet 1 of 6)

LEGEND

1. Fuel Selector Shaft Assembly
2. Knob
3. Screw
4. Lightplate/Spacer
5. Bolt
6. Washer
7. Nut

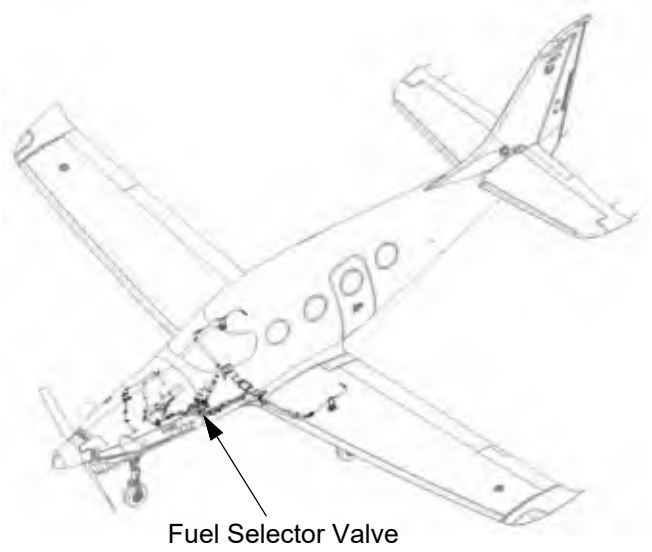

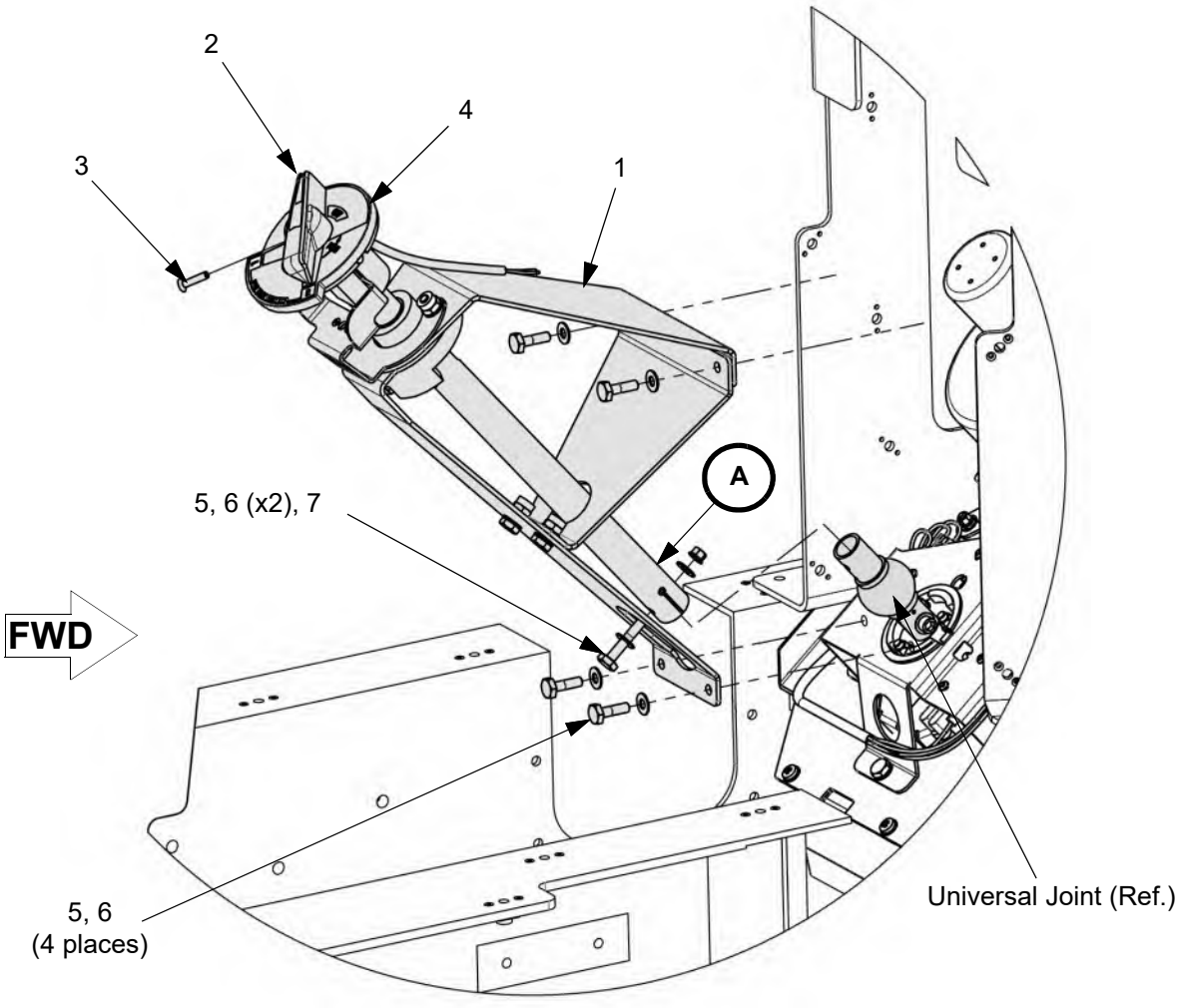

SN: K003 - K085 (excluding K014)

Figure 28-20.4: Fuel Selector Valve (Sheet 2 of 6)

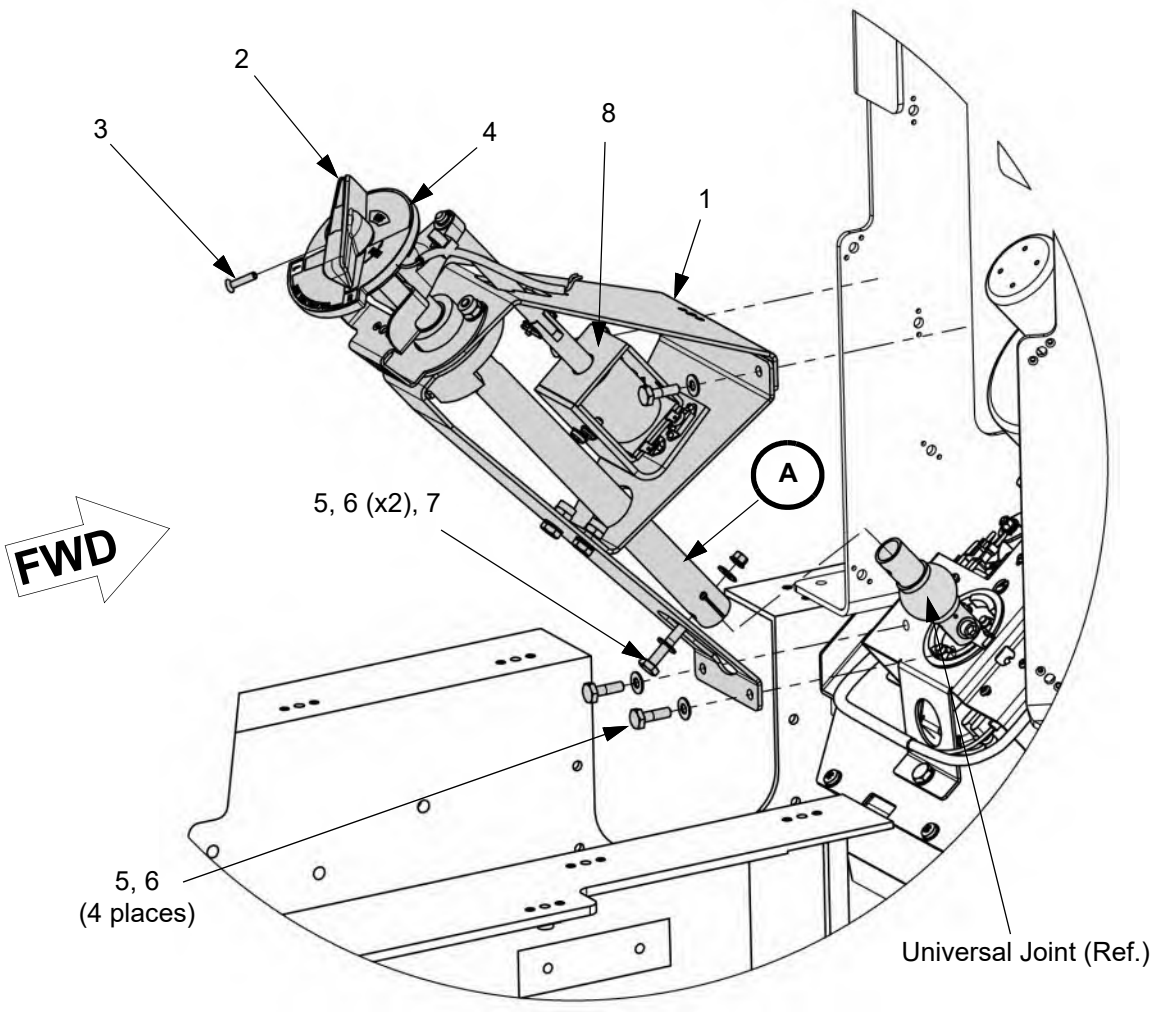

SN: K014, K086 and On

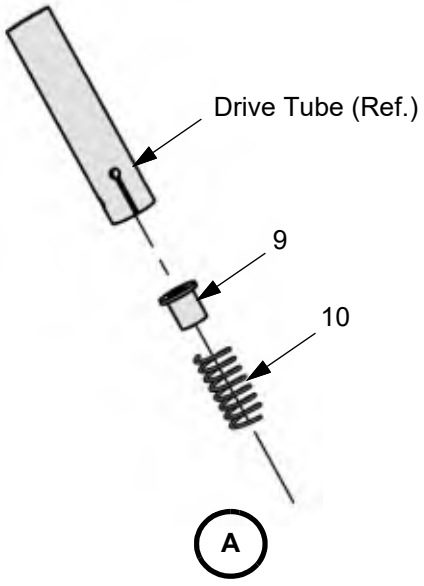

LEGEND

1. Fuel Selector Shaft Assembly
2. Knob
3. Screw
4. Lightplate/Spacer
5. Bolt
6. Washer
7. Nut
8. Fuel Shut-Off Solenoid
9. Nylon Spacer
10. Spring

Figure 28-20.4: Fuel Selector Valve (Sheet 3 of 6)

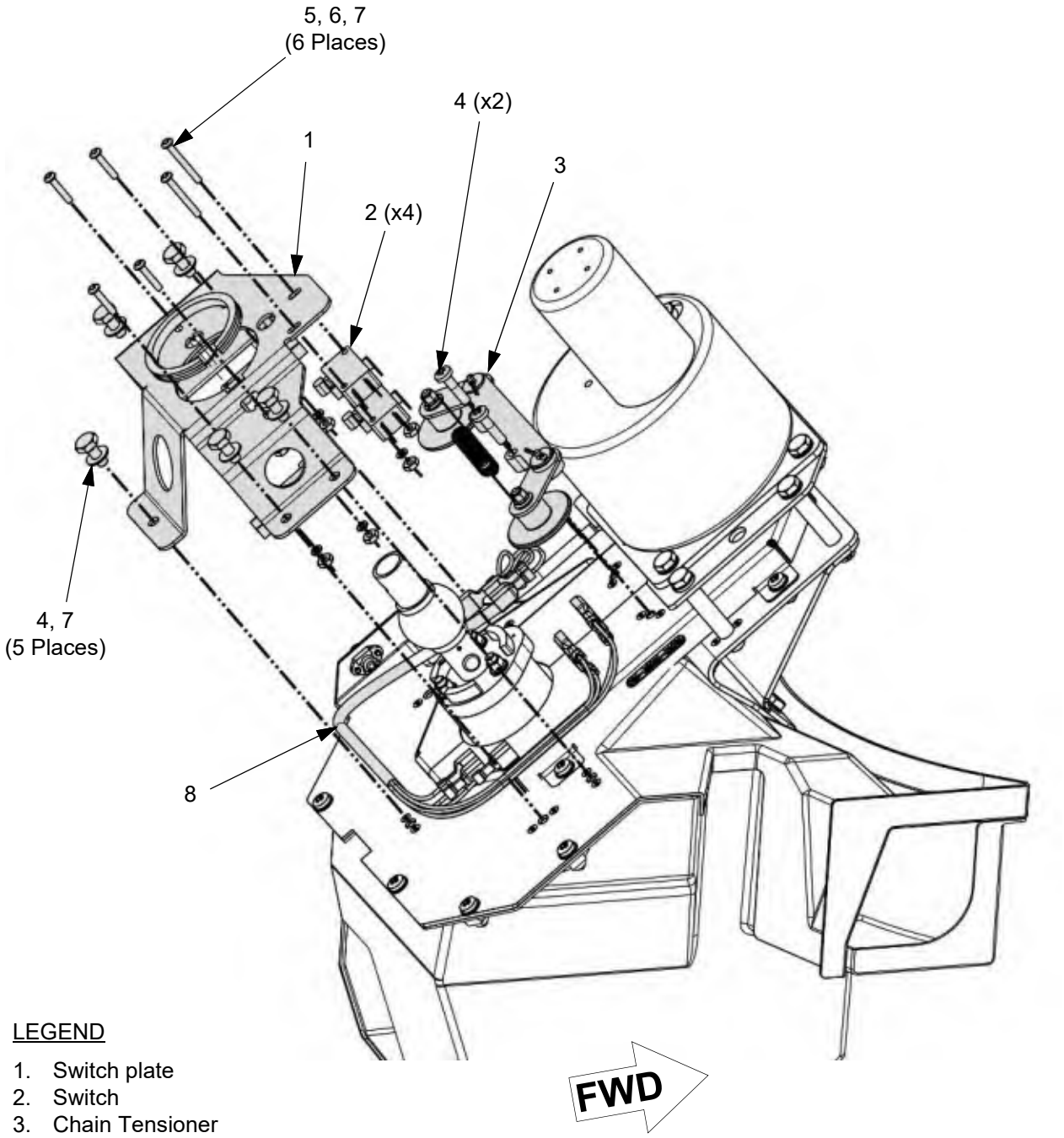

LEGEND

1. Switch plate
2. Switch
3. Chain Tensioner
4. Bolt
5. Screw
6. Washer
7. Nut
8. Wire harness

Figure 28-20.4: Fuel Selector Valve (Sheet 4 of 6)

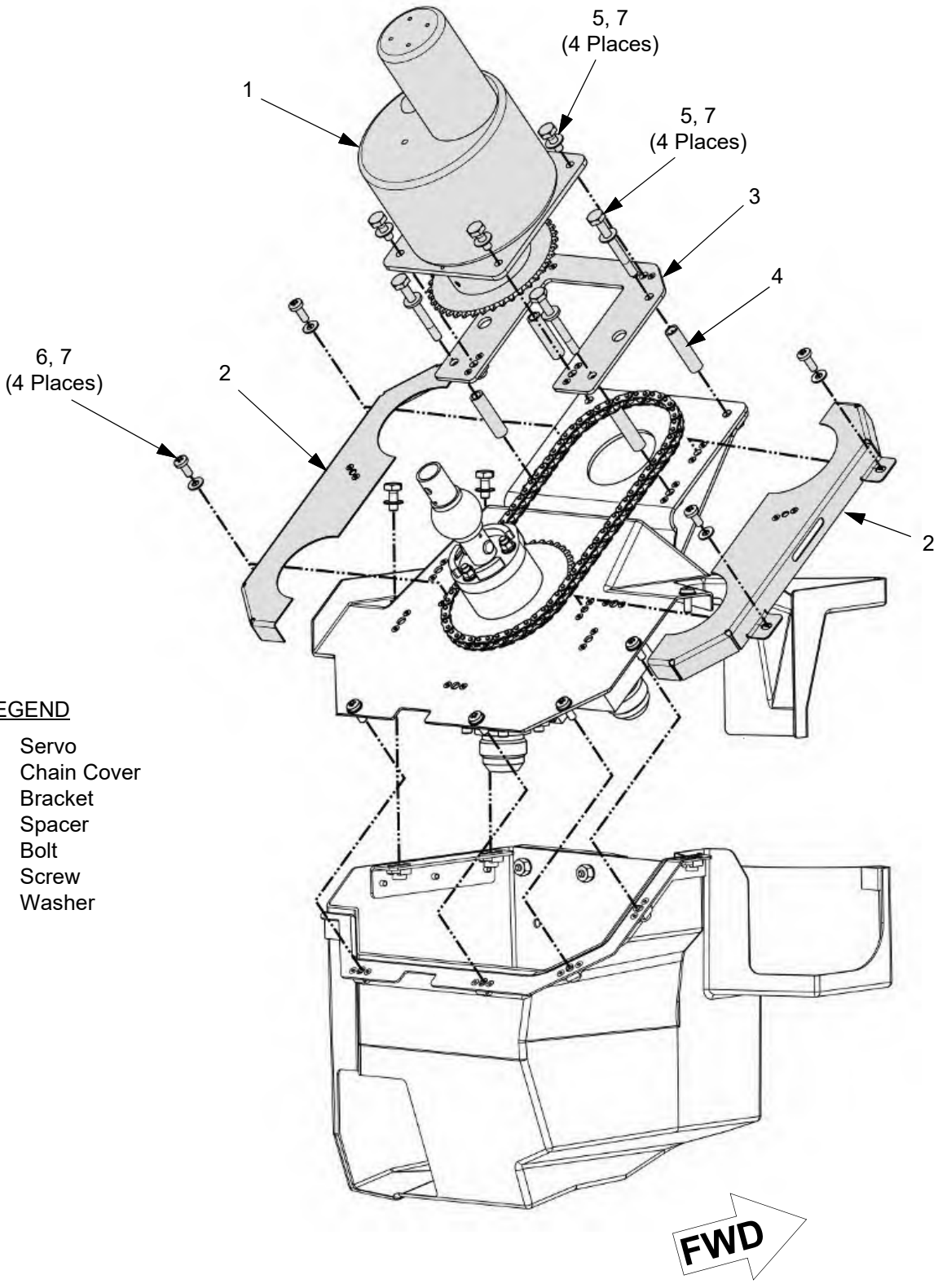

LEGEND

1. Servo
2. Chain Cover
3. Bracket
4. Spacer
5. Bolt
6. Screw
7. Washer

Figure 28-20.3: Fuel Selector Valve (Sheet 5 of 6)

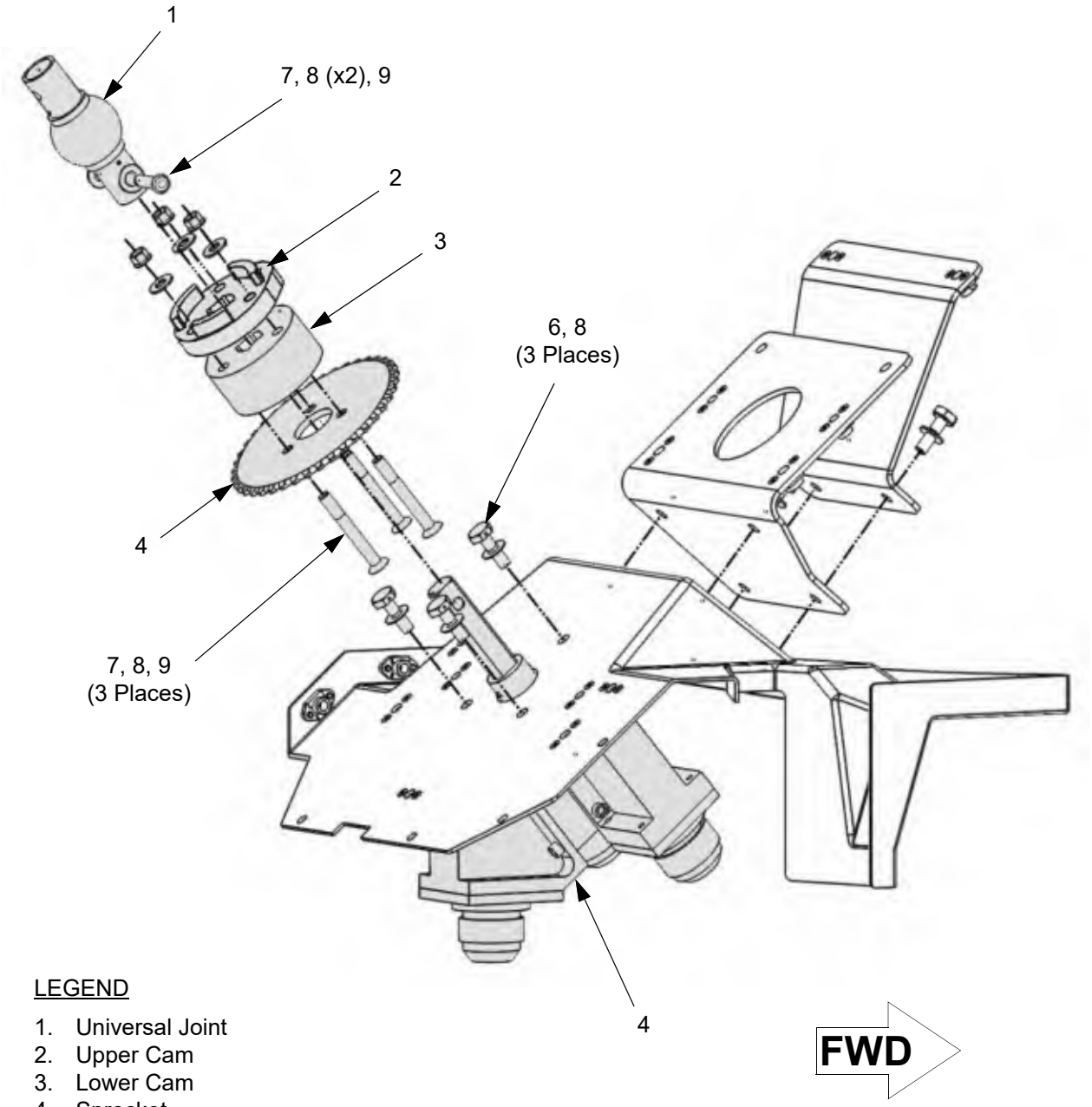

LEGEND

1. Universal Joint
2. Upper Cam
3. Lower Cam
4. Sprocket
5. Selector Valve
6. Bolt
7. Screw
8. Washer
9. Nut

Figure 28-20.4: Fuel Selector Valve (Sheet 6 of 6)

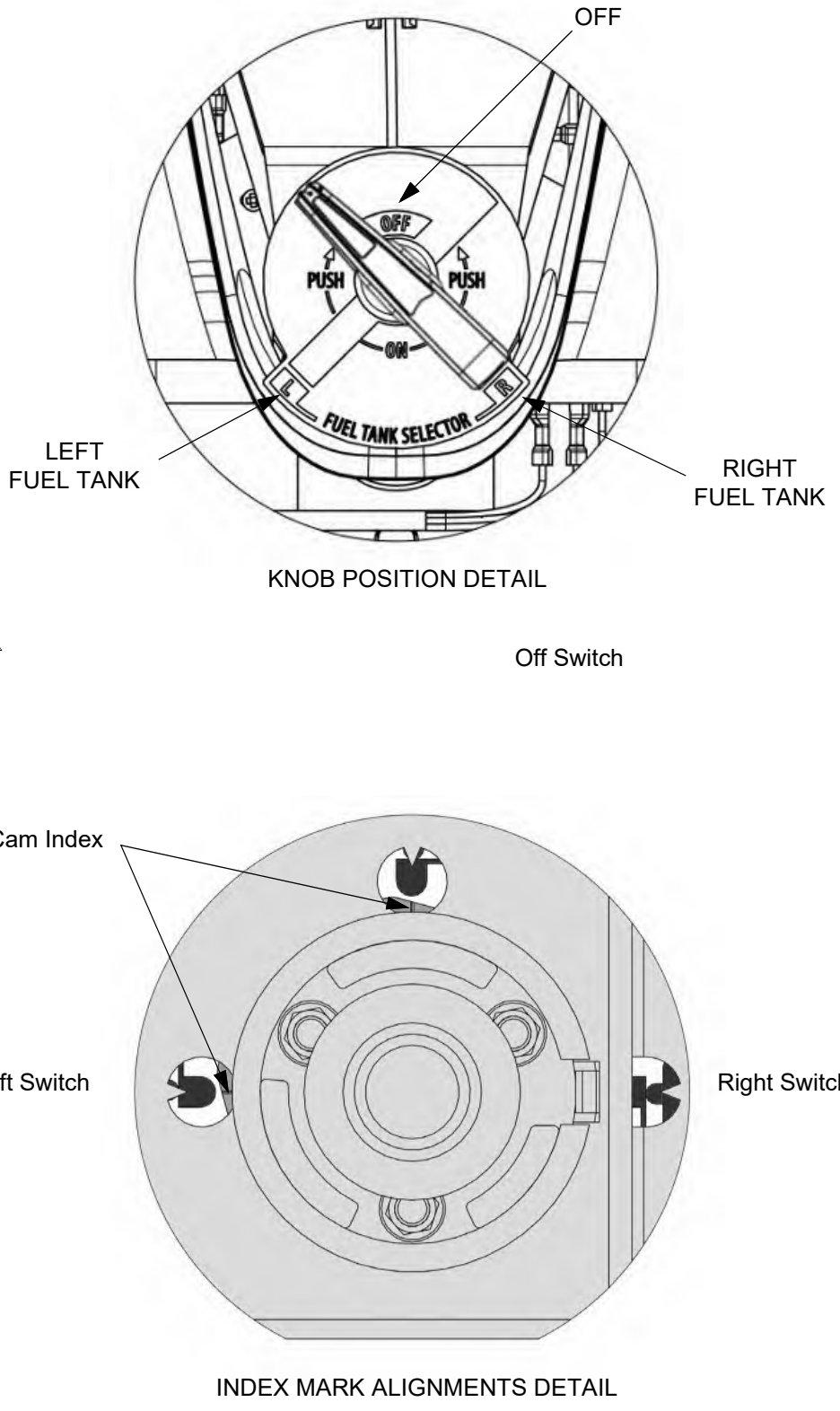

C. Fuel Filter (Gascolator)

(1) Removal

(a) Set the BATT 1 and BATT 2 switches to off.

(b) Disconnect external electrical power from the airplane (refer to Chapter 24-40).

(c) Make sure the fuel selector is set to OFF.

(d) Remove the cowling (refer to Chapter 71-10).

(e) Open the fuel filter drain then let the fuel filter and fuel lines empty into a suitable container.

(f) Disconnect the inlet tube and outlet hose, cap and plug open lines and fittings.

(g) Disconnect the electrical harness from the differential pressure sensor and fuel pressure transducer.

(h) Remove the bolts and washers attaching the fuel filter to the mounting bracket on the firewall and remove the fuel filter.

(i) If needed, remove the fittings installed in the inlet and outlet ports of the fuel filter. Note the clocking position of the fittings for installation.

(2) Installation.

(a) If removed, install the fittings into the inlet and outlet ports of the fuel filter clocked to the positions noted at removal. Tighten fittings 2-3 full turns after hand tight.

Note: Seal all pipe threads using Loctite™ 567 or anti-seize PTFE tape conforming to A-A-58092-2-2.

(b) Attach the fuel filter to the mounting bracket on the firewall using bolts and washers. Torque the bolts to 50 - 70 in-lbs. Install 0.032” safety wire.

(c) Attach the inlet and outlet hoses.

(d) Connect the wiring harness to the differential pressure sensor and fuel pressure transducer.

(e) Leak check the filter as follows:

(i) Connect external electrical power to the airplane (refer to Chapter 24-40).
(ii) Set the BATT 1 and BATT 2 switches to ON.
(iii) Set the fuel selector to L.
(iv) Set the L FUEL PUMP switch to ON.
(v) Leak check the inlet and outlet fittings and lines, drain nut, and between the filter body and bowl.
(vi) Set the L FUEL PUMP switch to off.
(vii) Set the fuel selector to OFF.
(viii) Set the BATT 1 and BATT 2 switches to off.
(ix) Disconnect external electrical power from the airplane (refer to Chapter 24-40).
(x) Do the fuel filtration indication Check:
(1) Ensure the ENGINE INST circuit breaker is IN.
(2) Disconnect the wiring harness from the fuel filter (gascolator).

(3) Connect pins B and C of the wiring harness using an applicable jumper.

Note: This will simulate a blocked fuel filter.

(4) Make sure the FUEL FILT BLOCK CAS illuminates.

(5) Reconnect the wiring harness to the fuel filter.

(f) Install the cowling (refer to Chapter 71-10).

(3) Cleaning

(a) Filter Cartridge Removal

(i) Set the BATT 1 and BATT 2 switches to off.

(ii) Disconnect external electrical power from the airplane (refer to Chapter 24-40).

(iii) Make sure the fuel selector is set to OFF.

(iv) Remove the cowling (refer to Chapter 71-10).

(v) Open the fuel filter drain then let the fuel filter and fuel lines empty into a suitable container.

(vi) Remove the safety wire then unscrew the nut until the filter bowl can be removed from the filter head. Twisting the bowl can be helpful for removal.

(vii) Remove the locknut that retains the filter cartridge from the center stud, then remove the filter cartridge.

(viii) Remove and discard the filter bowl o-ring from the filter head.

Note: Take care in removal of preformed o-rings to not scratch or nick the o-rings retaining and sealing surfaces.

(b) Filter Cartridge Cleaning

Note: Stoddard solvent, trichloroethylene, or heavy duty detergent may be used to clean the filter wafers. If detergent is used ensure the parts have been thoroughly cleaned, rinsed, and dried before filter reassembly.

Note: Clean the filter cartridge as an assembly.

(i) Clean the filter wafers and spacers using a non-metallic stiff bristle brush. Agitate the parts in solvent.

(ii) Drain the solvent then blow the parts dry using low pressure compressed air.

(iii) Ensure all ports and passages are clean and unobstructed.

(iv) Replace a filter cartridge that is warped, torn, punctured, or otherwise damaged.

(c) Bypass Check Valve Testing

Note: Whenever the fuel filter is removed for cleaning and/or inspection, test the operation of the Bypass check valve. This verifies the bypass valve is free to move against its internal spring in the event of a blocked filter element.

(i) Ensure the exposed face of the bypass check valve is clean and free from dirt and debris.
(ii) Press against the exposed face of the bypass check valve to depress the internal spring.
(iii) If the spring cannot be depressed, replace the bypass check valve.

(d) Differential Pressure Indicator Testing

Note: Whenever the fuel filter is removed for cleaning and/or inspection, test the operation of the differential pressure indicator. This verifies the differential pressure indicator is functioning correctly and will cause the FUEL FILT BLOCK CAS caution to illuminate if the fuel filter becomes clogged.

(i) Equip a 30 cc syringe with a plastic tip (McMaster-Carr p/n 7510A655 and 6699A5, or similar) that can be inserted into the 0.05” diameter pressure port in the fuel filter top.
(ii) Attach an Ohmmeter to the electrical connection of the differential pressure indicator (pins B and C). Infinite resistance should be indicated and the switch is open.
(iii) Pull the plunger back on the syringe and load it with 3 cc of air.

Figure 28-20.5: Differential Pressure Indicator Testing

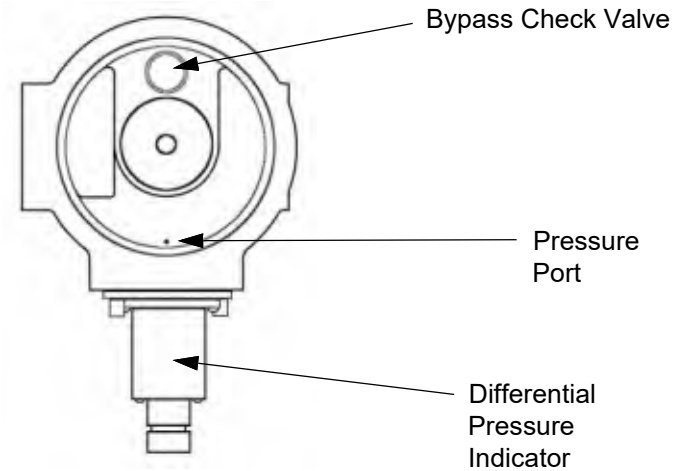

View looking up, filter bowl and cartridge removed.

(iv) Insert the tip of the syringe into the 0.05” pressure port in the fuel filter top.

(v) Depress the plunger 3 cc. This should provide approximately 1.4 psid and close the switch. The ohmmeter will show continuity if the switch has closed showing the differential pressure indicator is functioning correctly. If continuity is not shown, the differential pressure indicator has failed and the fuel filter must be replaced.

Note: Do not depress the plunger more than 3 cc.

(e) Filter Cartridge Installation

(i) Inspect all parts for cleanliness.

(ii) Lubricate all packing and seals using clean engine oil (MIL-PRF-23699).

(iii) Put the filter cartridge in position on the center stud and install the nut on the center stud.

CAUTION: Do not over tighten the filter cartridge.

(iv) Torque the nut to snug the filter cartridge then tighten the nut an additional 1/4 turn.

(v) Attach the fuel bowl to the filter head by threading the nut/drain fitting to the center stud.

Note: Rotate the fuel bowl back and forth while applying upward pressure during installation. This prevents the o-ring from being pinched. Orient the bowl during installation so the placard is facing forward.

(vi) Torque the nut/drain fitting 80 to 120 in-lbs then safety wire the nut to the filter head.

(vii) Leak check the filter as follows:

(1) Connect external electrical power to the airplane (refer to Chapter 24-40).

(2) Set the BATT 1 and BATT 2 switches to ON.

(3) Set the fuel selector to L.

(4) Set the L FUEL PUMP switch to ON.

(5) Leak check the inlet and outlet fittings and lines, drain nut, and between the filter head and bowl.

(6) Set the L FUEL PUMP switch to off.

(7) Set the fuel selector to OFF.

(8) Set the BATT 1 and BATT 2 switches to off.

(9) Disconnect external electrical power from the airplane (refer to Chapter 24-40).

(viii) Install the cowling (refer to Chapter 71-10).

Figure 28-20.6: Fuel Filter



LEGEND

1. Filter Head
2. Filter Bowl
3. Nut/Drain Port
4. Nut
5. Filter Disk
6. Bypass Check Valve
7. Gasket
8. O-Ring
9. Retaining Ring
10. Differential Pressure Switch
11. Center Stud

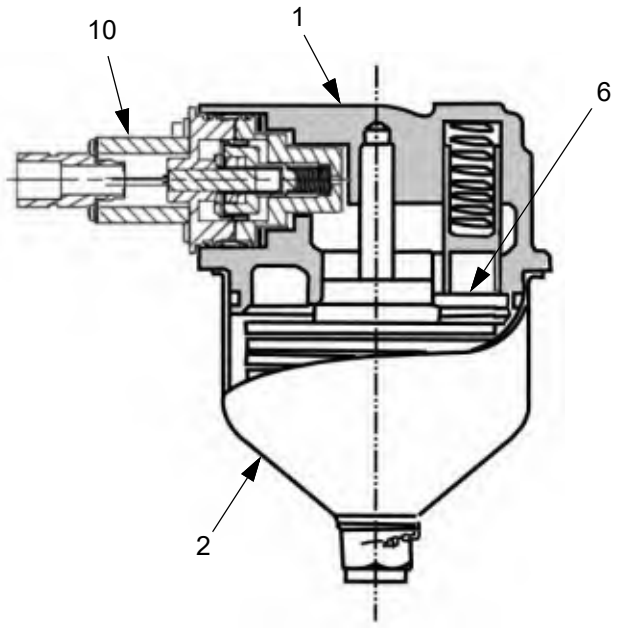

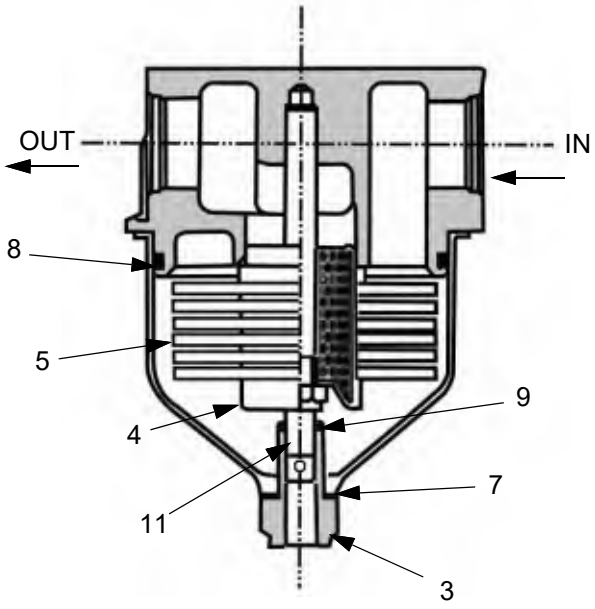

D. Fuel Pressure Transducer

(Refer to Figure 28-20.6)

(1) Removal

(a) Set the BATT 1 and BATT 2 switches to off.

(b) Disconnect external electrical power from the airplane (refer to Chapter 24-40).

(c) Make sure the fuel selector is set to OFF.

(d) Remove the cowling (refer to Chapter 71-10).

(e) Drain the fuel lines through the fuel filter drain.

(f) Disconnect the electrical connector (P322) from the fuel pressure transducer.

(g) Remove the pressure transducer from the reducer fitting.

(h) Cap or plug all open lines and fittings.

(2) Installation

(a) Install the pressure transducer on the reducer fitting and torque the b-nut to 135 - 150 in-lbs.

(b) Connect the electrical connector (P322) to the fuel pressure transducer.

(c) Run the engine, refer to the latest revision of the POH/AFM, and leak check the fuel pressure transducer and verify the fuel pressure indication is present on the MFD.

(d) If the FPRES reading is not 0 when the engine isn't running, do the Fuel Pressure DAT Calibration, refer to Chapter 39.10.1.H (SN: K003-K085, except K014) or Chapter 39.11.1.H (SN: K014, K086 and On).

(e) Install the cowling (refer to Chapter 71-10).

E. Fuel Flow Transducer

(Refer to Figure 28-20.6)

(1) Removal

(a) Set the BATT 1 and BATT 2 switches to off.

(b) Disconnect external electrical power from the airplane (refer to Chapter 24-40).

(c) Make sure the fuel selector is set to OFF.

(d) Remove the cowling (refer to Chapter 71-10).

(e) Disconnect the electrical connector (P323) from the fuel flow transducer.

Note: Make not of the clocked position of the fuel flow transducers for installation.

(f) Cut the safety wire and disconnect the tubing b-nuts from the fuel flow transducer.

(g) Remove the fuel flow transducer.

(h) Cap or plug all open lines and fittings.

(2) Installation

(a) Put the fuel flow transducer in the clocked position noted during removal and connect the b-nuts.

(b) Torque the b-nuts to 450 - 500 in-lbs and install safety wire.

(c) Connect the electrical connector (P323) to the fuel flow transducer.

(d) Run the engine, refer to the latest revision of the POH/AFM, and leak check the fuel flow transducer and verify the fuel flow indication is present on the MFD.

(e) Install the cowling (refer to Chapter 71-10).

(f) Do the Fuel Flow Transducer Calibration procedure.

(3) Calibration

(a) With the aircraft on a level surface, top the aircraft with fuel (fill until fuel touches bottom of fuel filler ring).

Note: It is recommended to use the same fuel source when performing this procedure.

Note: Top-off to the same level after the last flight of this procedure. Leveling the aircraft is recommended

(b) (SN: K003 - K085, except K014) - On the MFD Aux - Weight and Fuel Planning page, press the *RST Used* softkey to reset Total Fuel Used.

(SN: K014, K086 and On) - On the MFD Aux - Weight and Balance page, press the *FOB Sync* softkey and note the pre-flight total fuel on board.

(c) Perform one or more flights (1 hour minimum) with a normal climb and cruise profile (refer to the latest revision of the appropriate Epic E1000 Pilot's Operating Handbook and FAA Approved Airplane Flight Manual).

Note: More flight hours will create a more accurate data sample resulting in a more accurate fuel flow indication.

Note: If flying multiple flights, record all fuel added between flights.

(d) (SN: K003 - K085, except K014) At the end of the last flight, after engine shutdown and BEFORE shutting off the avionics system, record the Total Fuel Used in gallons from the Aux Weight and Fuel page.

(SN: K014, K086 and On) At the end of each flight, after engine shutdown and BEFORE shutting off the avionics system, calculate the Total Fuel Used in gallons from the Aux - Weight and Balance page as follows:

(i) Note the post-flight total fuel on board.

(ii) Subtract the post-flight total fuel on board from the pre-flight total fuel on board noted in step (b) to get the Total Fuel Used for that flight. If multiple flights were performed, sum the Total Fuel Used values for each flight to get the final Total Fuel Used value.

(e) Top-off the aircraft to the same level in step (a).

(f) Record the total number of gallons of fuel used to top-off the airplane, including any fuel added between flights, this number is the *Actual Fuel Used* number.

Note: Take the *Actual Fuel Used* number from the calibrated fueling source.

(g) Calculate the *Scale Factor* by using the following formula:

Actual Fuel Used / Total Fuel Used

(h) Connect a ground power unit to the airplane (refer to Chapter 24-40).

(i) Put the aircraft in Configuration mode:

(i) Pull the PFD 1, PFD 2 and MFD circuit breakers.
(ii) Set the BATT 1 and BATT 2 switches to ON.
(iii) Press ENTER on the pilot's PFD while resetting the PFD 1 circuit breaker.
(iv) Press ENTER on the co-pilot's PFD while resetting the PFD 2 circuit breaker.
(v) Press ENTER on the MFD while resetting the MFD circuit breaker.
(vi) INITIALIZING SYSTEM message should be displayed on all three displays.

(j) Using the PFD, go to the Fuel Tank Calibration page.

(k) Calculate the new ENG 1 SCALE by multiplying the existing ENG 1 SCALE value by the *Scale Factor* calculated in step (g).

(l) On the PFD, press the four right soft keys, right-to-left (12, 11, 10, 9), to unlock the ENG 1 SCALE field.

(m) Use the FMS knob to enter the new ENG 1 SCALE.

(n) Perform an "Update Config" and "Confirm Config" function on PFD 1.

(o) Cycle power on the EFIS system, confirm there is no "Config Error" message.

(p) Set the BATT 1 and BATT 2 switches to off.

(q) Disconnect the ground power unit from the airplane (refer to Chapter 24-40)

Note: If necessary, repeat this procedure to obtain an even more accurate fuel flow indication.

F. Fuel Return Solenoid Valve

(Refer to Figure 28-20.6)

(1) Removal

(a) Set the BATT 1 and BATT 2 switches to off.

(b) Disconnect external electrical power from the airplane (refer to Chapter 24-40).

(c) Make sure the fuel selector is set to OFF.

(d) Remove the cowling (refer to Chapter 71-10).

(e) Disconnect the electrical connector from the solenoid valve.

(f) Disconnect the inlet and outlet hoses from the solenoid valve.

(g) Cap or plug all open lines and fittings.

(h) Remove the (2) nuts, washers, and bolts that attach the solenoid valve to the cushioned clamps on the engine mount.

(i) Remove the solenoid valve.

(j) If required, remove the reducers from the solenoid valve.

(2) Installation

(a) If removed, install the reducers with new M83461/2-906 o-rings in the solenoid valve. Torque the reducers to 24 - 26 ft-lbs.

(b) Install the solenoid valve on the engine mount using the (2) cushioned clamps and (2) nuts, washers and bolts. Torque the nuts to

(c) Connect the inlet and outlet hoses to the solenoid valve. Torque the b-nuts to 135 - 150 in-lbs.

(d) Connect the electrical connector to the solenoid valve.

(e) Run the engine, refer to the latest revision of the POH/AFM, and leak check the fuel return solenoid valve.

(f) Install the cowling (refer to Chapter 71-10).

Figure 28-20.7: Fuel System Components

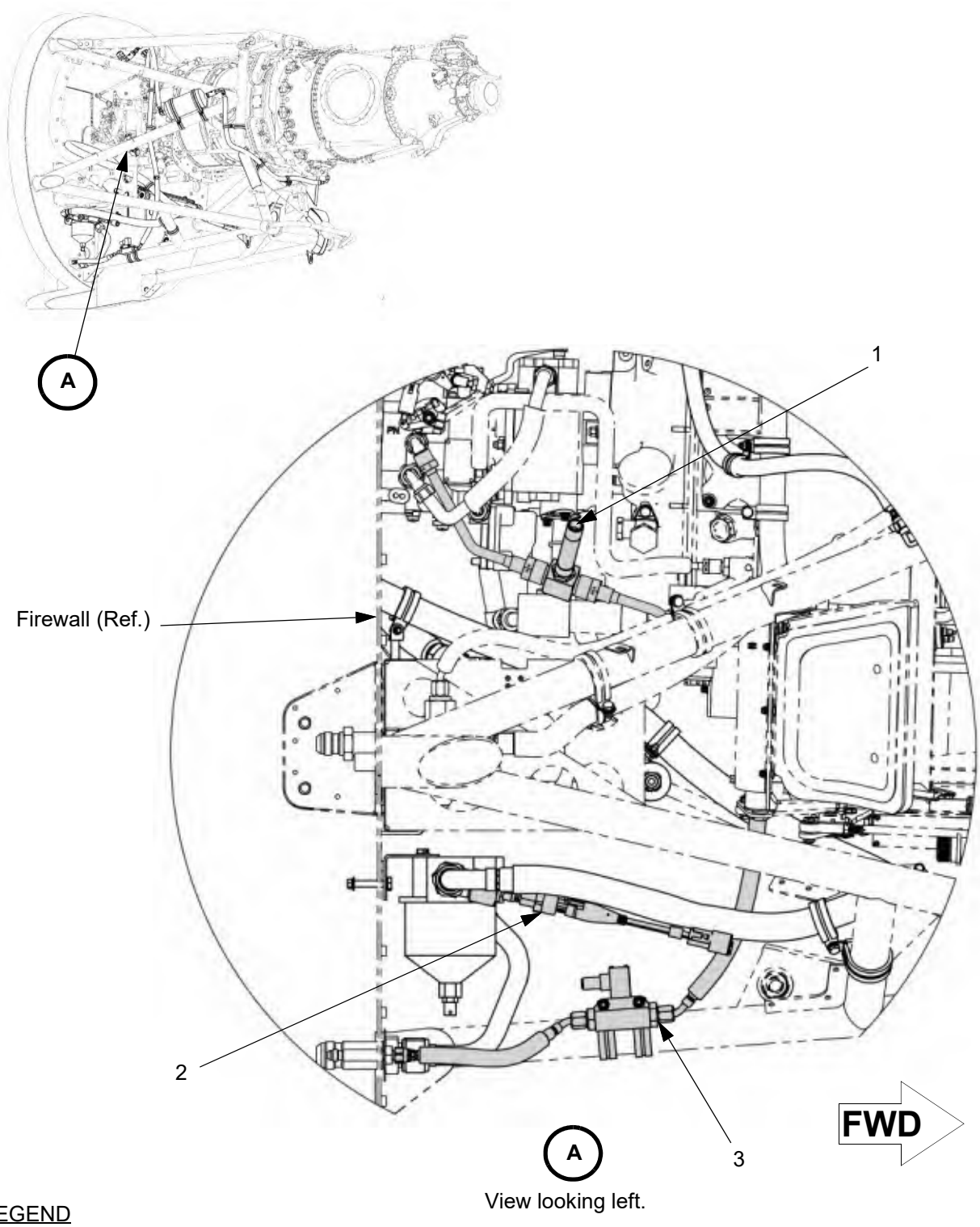

LEGEND

1. Fuel Flow Transducer
2. Fuel Pressure Transducer
3. Fuel Return Solenoid Valve

G. Fuel Blowback Accumulator

(1) Removal

(a) Set the BATT 1 and BATT 2 switches to off.

(b) Disconnect external electrical power from the airplane (refer to Chapter 24-40).

(c) Make sure the fuel selector is set to OFF.

(d) Remove the cowling (refer to Chapter 71-10).

(e) Disconnect the inlet and outlet hoses from the accumulator. Cap and plug open fittings and lines.

(f) Remove the (2) bolts, washers, and nuts that attach the cushioned clamps to the engine mount.

(g) Remove the accumulator.

(h) If needed, remove the check valve and elbow fittings from the accumulator.

(2) Installation

(a) If removed, install the check valve and pipe fittings to the accumulator. Tighten the fitting and check valve 2-3 full turns after hand tight.

Note: Seal all pipe threads using Loctite™ 567 or anti-seize PTFE tape conforming to A-A-58092-2-2.

(b) Put the accumulator in position on the engine mount with the cushioned clamps and install the bolts, washers, and nuts that attach the clamps to the engine mount. Torque the nuts to 20 - 25 in-lbs.

(c) Connect the inlet and outlet hoses to the accumulator. Torque the hose fittings to 135 - 150 in-lbs.

(d) Install the cowling (refer to Chapter 71-10).

Figure 28-20.8: Fuel Blowback Accumulator

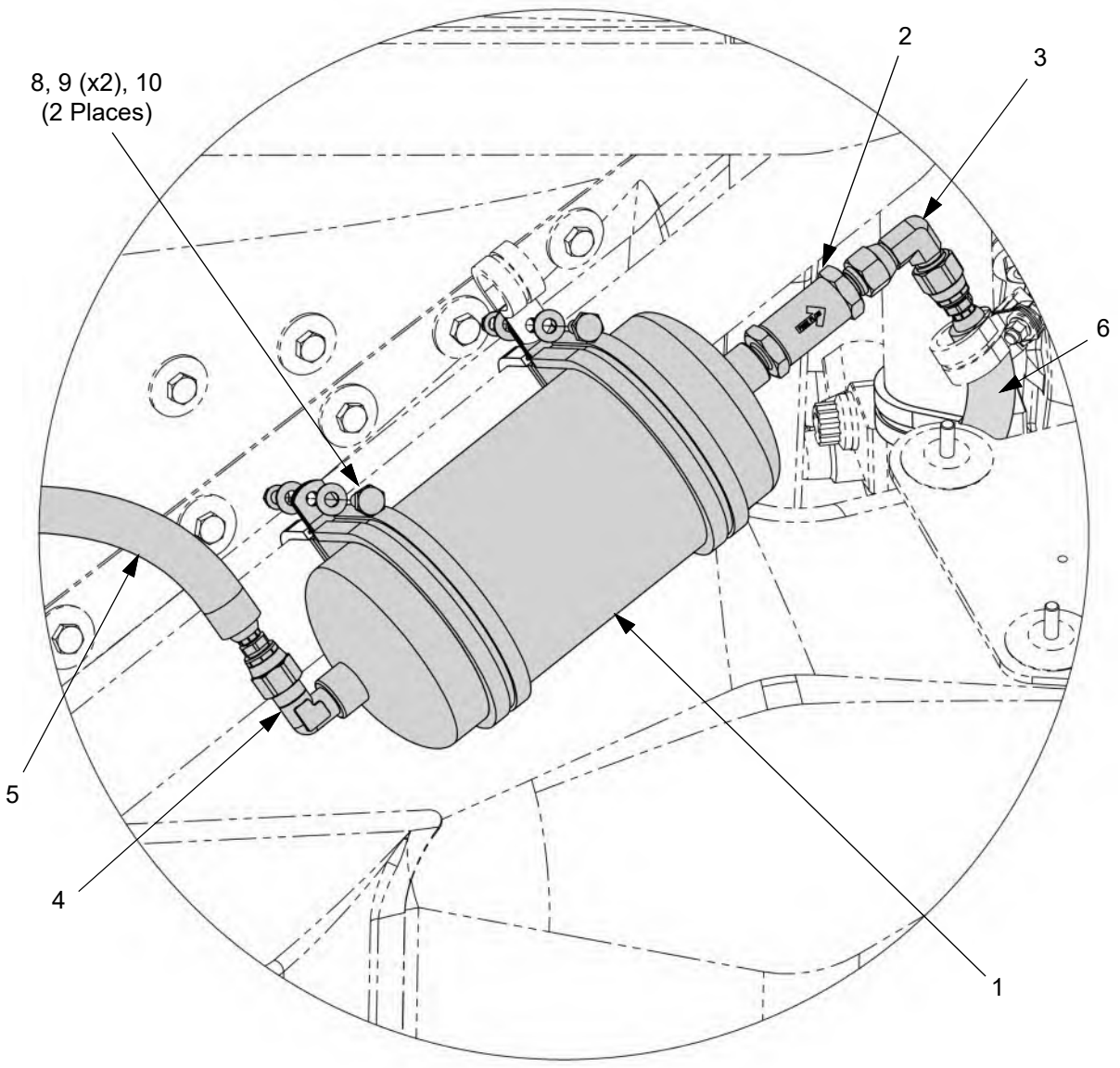

LEGEND

1. Blowback Accumulator
2. Check Valve (1/8 NPT - 1/4 JIC)
3. Elbow Fitting (1/4 JIC)
4. Elbow Fitting (1/8 NPT - 1/4 JIC)
5. Input Hose
6. Output Hose
7. Cushioned Clamp
8. Bolt
9. Washer
10. Nut

H. In-line Pneumatic (P3) Filter

(1) Removal

(a) Set the BATT 1 and BATT 2 switches to off.

(b) Disconnect external electrical power from the airplane (refer to Chapter 24-40).

(c) Remove the top cowling (refer to Chapter 71-10).

(d) Disconnect the pneumatic lines from the tee-fitting and elbow fitting. Cap and plug all open lines and fittings.

(e) Remove the check valve and elbow fitting from the tee fitting on the P3 filter.

(f) Remove the P3 filter from the ECS manifold.

(g) Remove the tee-fitting from the P3 filter.

(2) Installation

Note: Seal all pipe threads using Loctite™ 567 or anti-seize PTFE tape conforming to A-A-58092-2-2.

(a) Install the tee-fitting in the P3 filter. Tighten hand tight plus 1.5 - 3 full turns.

(b) Install the P3 filter/tee-fitting in the ECS manifold. Tighten hand tight plus 2-3 full turns making sure the tee-fitting is oriented forward for the blowback accumulator pneumatic line.

(c) Connect the pneumatic lines to the tee-fitting and torque the b-nuts to 135 - 150 in-lbs.

(3) Cleaning

(a) Remove the in-line filter from the airplane.

(b) Remove external dirt and/or contamination using acetone or mineral spirits.

(c) Soak the filter in a clean container of acetone or mineral spirits for a minimum of 30 minutes.

(d) Remove the filter from the cleaning fluid then remove any residual cleaning fluid from the exterior using clean compress air.

(e) Blow through the filter element from outlet to inlet using clean compressed air.

(f) Dip the filter in isopropyl alcohol to remove any water particles. Allow the filter to air dry.

(g) Install the in-line filter.

Figure 28-20.9: In-line Pneumatic (P3) Filter

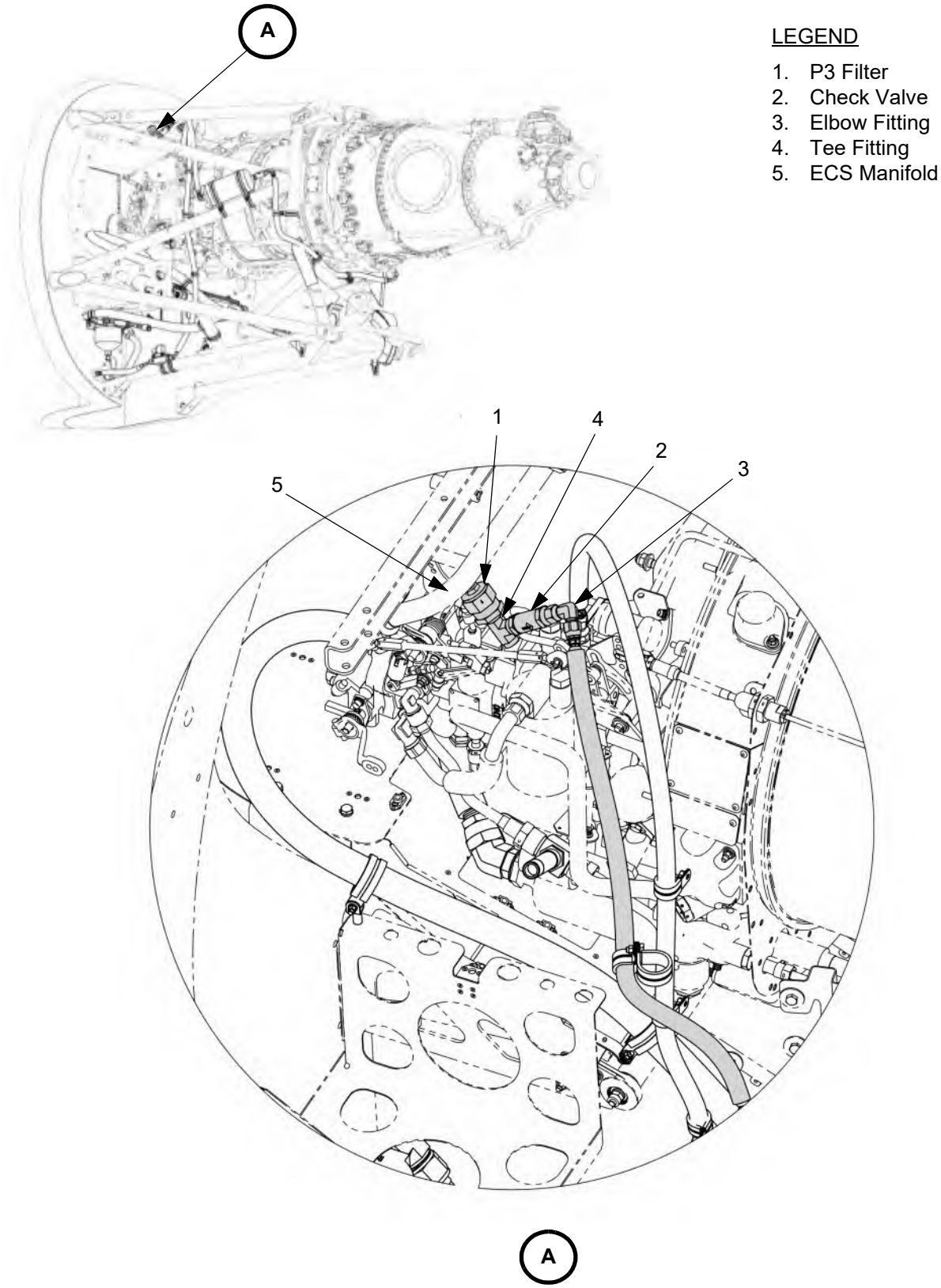

LEGEND

1. P3 Filter
2. Check Valve
3. Elbow Fitting
4. Tee Fitting
5. ECS Manifold

I. Fuel Lines Forward of the Firewall

(1) Removal

(a) Set the BATT 1 and BATT 2 switches to off.

(b) Disconnect external electrical power from the airplane (refer to Chapter 24-40).

(c) Make sure the fuel selector is set to OFF.

(d) Remove the cowling (refer to Chapter 71-10).

(e) Drain the fuel from the fuel lines using the drain on the fuel filter (gascolator).

Note: Make not of the position of the cushioned clamps for fuel line installation.

(f) Remove the cushioned clamps attaching the fuel line(s) to the engine mount and other fluid lines.

(g) Remove the fuel line(s) and cap and plug all open lines an fittings

(2) Installation

(a) Install the fuel line(s) and torque the b-nuts (refer to Chapter 20-70).

(b) Install the cushioned clamps attaching the fuel line to the engine mount and other fluid lines and toque the clamps fasteners to 20 - 25 in-lbs..

(c) Install the cowling (refer to Chapter 71-10).

J. Fuel Lines in the Cabin

(1) Removal

(a) Set the BATT 1 and BATT 2 switches to off.

(b) Make sure the fuel selector is set to OFF.

(c) De-fuel the left and right wings (refer to Chapter 12).

(d) Remove the crew seats (refer to Chapter 25-10).

(e) Remove the crew carpet and flooring. Refer to Chapter 25-10 and 53-20.

(f) Find the fuel line to be removed by opening the inspection plates on the fuel line shrouds.

Note: The inspection panels are attached to the fuel line shrouds using bolts, washers, and RTV sealant. The fuel line shrouds are attached to the underfloor supports and the fuselage using RTV Sealant.

(g) Remove the shrouds as necessary to access the fuel line to be removed.

(h) Remove the fuel line. Cap all open connections.

(i) Note any ground straps for re-installation.

(2) Installation

(a) Install the fuel line.

Note: Seal all pipe threads using Loctite™ 567 or anti-seize PTFE tape conforming to A-A-58092-2-2.

(b) Ensure all ground straps are connected.

(c) Thoroughly clean the shroud of old RTV 100 sealant then attach it using new RTV 100 sealant. The sealant must create a leak proof seal.

Note: The fuel line shrouds are sealed using RTV sealant to ensure a tight air pressure seal for cabin pressurization. The fuel line area behind the shrouds is unpressurized.

(d) Install all shroud inspection plates using RTV 100 sealant, washers, and bolts. The sealant must create a leak proof seal.

(e) Install the flooring and carpet, (refer to Chapter 25-10 and 53-20).

(f) Install the crew seats (refer to Chapter 25-10).

Figure 28-20.10: Fuel Line Shrouds

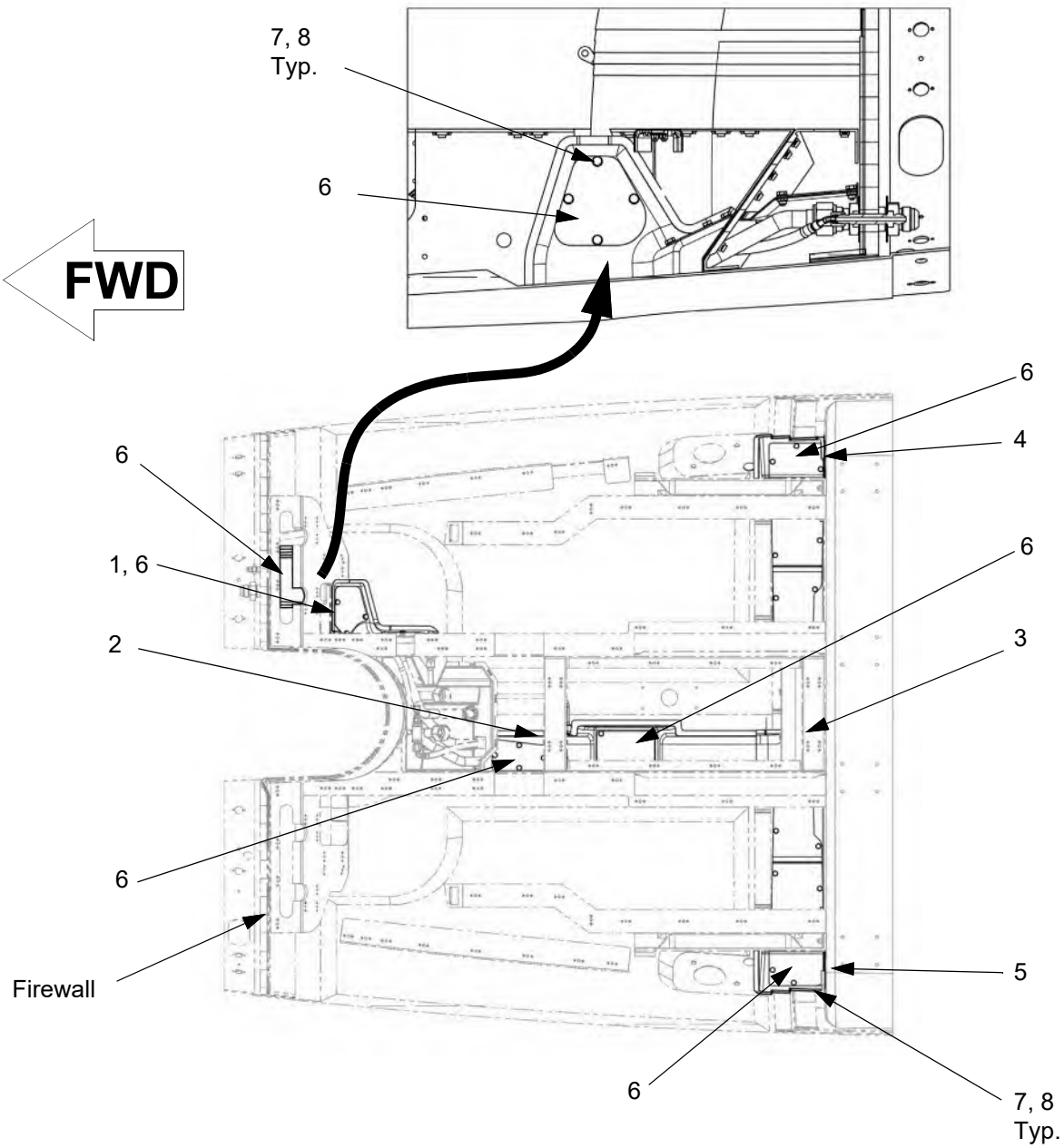

LEGEND

1. Engine Feed Shroud
2. Longitudinal Shroud
3. Transition Shroud
4. Right Tank Inlet Shroud
5. Left Tank Inlet Shroud
6. Inspection Plate
7. Bolt
8. Washer

Figure 28-20.11: Fuel Lines (Sheet 1 of 2)

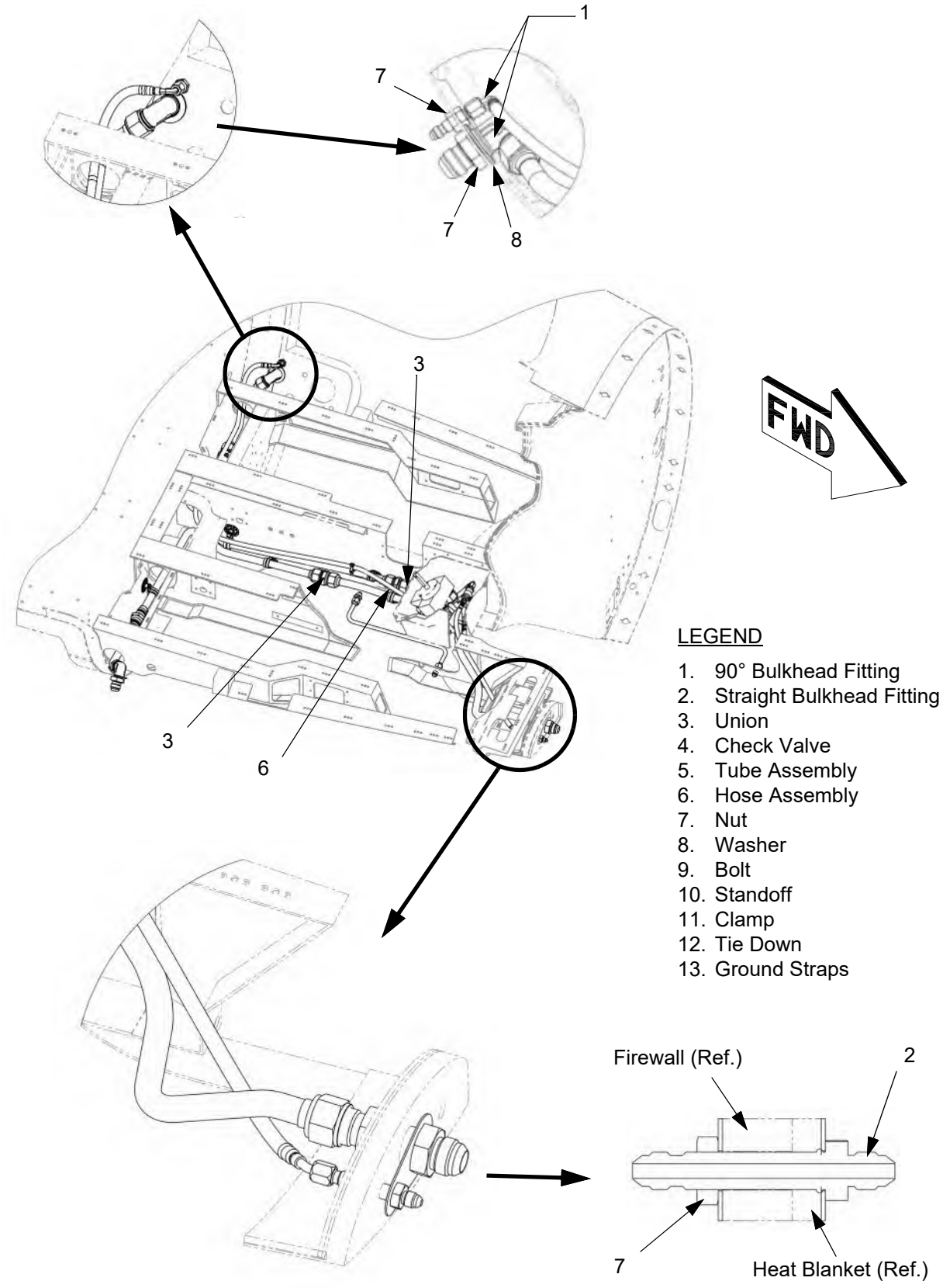

Figure 28-20.6: Fuel Lines (Sheet 2 of 2)

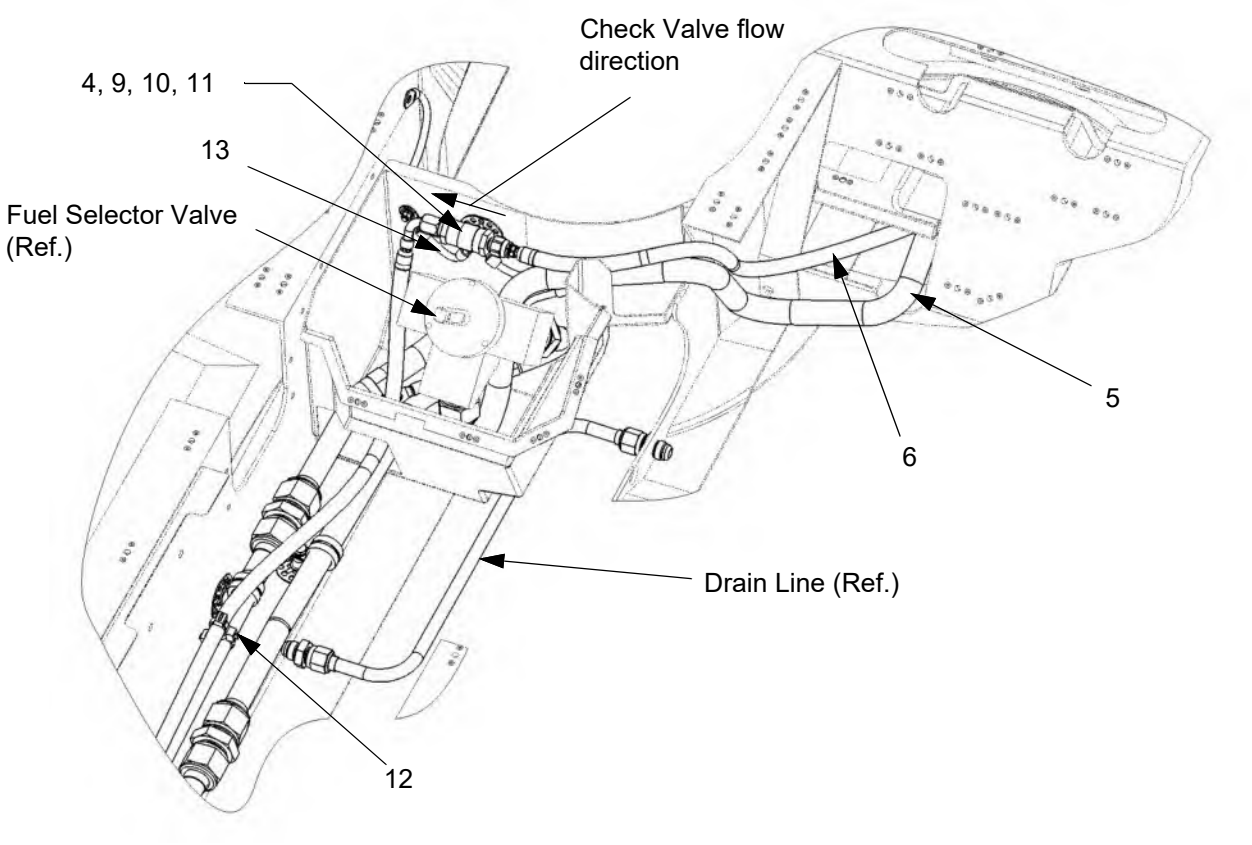

LEGEND

1. 90° Bulkhead Fitting
2. Straight Bulkhead Fitting
3. Union
4. Check Valve
5. Tube Assembly
6. Hose Assembly
7. Nut
8. Washer
9. Bolt
10. Standoff
11. Clamp
12. Tie Down
13. Ground Straps

INDICATING

1. Description

Each wing has a fuel level probe that penetrates through each of the fuel bays from the wing tip to the fuel collection bay. The probes pass through nylon guides bonded into the ribs in the wings.

2. Maintenance Practices

A. Fuel Probes

Removal and installation procedures are similar for both wing fuel probes.

(1) Fuel Probe Removal

(a) De-fuel the wing of the fuel probe to be removed. Refer to Chapter 12-20.

(b) Remove the wing tip (refer to Chapter 57-30).

(c) Disconnect the wires from the fuel probe.

(d) Unscrew then slide the fuel probe out the end of the wing.

(e) Plug or cap the outboard fuel probe coupler to keep contamination out of the wing fuel tanks.

(2) Fuel Probe Installation

(a) Unplug the fuel probe coupler at the end of the wing.

Note: If temporarily installing the fuel probe into the coupling, make sure to lubricate the threads to prevent seizing.

(b) Slide the fuel probe through the coupler and into the wing.

(c) Coat the threads of the fuel probe with Loctite 567.

(d) Screw the probe into the coupler then tighten the probe fastener 1-2 turns past hand tight.

(e) Let the sealant fully cure (refer to the sealant manufacturer's instructions).

(f) Connect the wires to the fuel probe and torque the screws to 1 - 2 in-lbs.

Note: Make sure the insulation on the ring terminals is not touching each other or the Delrin washers. This can cause inaccurate fuel probe readings.

(g) Install the wing tip (refer to Chapter 57-30).

(h) Do the Fuel Quantity Calibration (refer to Chapter 28-40.2.A[5]).

(3) IMC Interface Module Removal

(a) Remove the wing tip (refer to Chapter 57-30).

(b) Disconnect the fuel probe electrical connector.

(c) Remove the screws that attach the IMC to the fuel probe.

(d) Label the wires to note their position in the electrical connector.

(e) Disconnect the IMC from the electrical connector.

(4) IMC Interface Module Installation

(a) Connect the IMC to the electrical connector.

Note: If the wires are not labeled, refer to the E1000 Aircraft Wiring manual for correct pin-out.

(b) Install the screws that connect the IMC to the fuel probe.

Note: Make sure the wires are connected in the correct polarity; white wire to the center connection, black wire to the side connection.

Note: Make sure the insulation on the ring terminals is not touching each other or the Delrin washers. This can cause inaccurate fuel probe readings.

(c) Install the wing tip (refer to Chapter 57-30).

(d) Do the Fuel Quantity Calibration (refer to Chapter 28-40.2.A[5]).

(5) Fuel Quantity Calibration

Fuel Tank Calibration should be performed following any procedure that could change the fuel quantity indication or following the replacement of fuel indication parts including fuel probes and the GIA configuration module.

(a) Do the steps that follow to add unusable fuel:

(i) Level the airplane (refer to Chapter 8-20.2.A).

(ii) De-fuel the airplane (refer to Chapter 12-20.2A[2]).

(iii) Drain the remaining fuel from both wings from the sumps.

(iv) Add 6.7 ± 0.25 gallons of unusable fuel to each wing.

Note: Fuel quantities should be weighed with a calibrated scale or added in known quantities from a fuel truck with calibrated gauges.

(b) Connect external electrical power to the airplane (refer to Chapter 24-40).

(c) Make sure the ENGINE INST circuit breaker is in.

(d) Set the BATT 1 and BATT 2 switches to ON.

(e) Make sure the fuel selector is set to OFF

(f) Put the aircraft in Configuration mode:

(i) Pull the PFD 1 and PFD 2 circuit breakers.

(ii) Set the BATT 1 and BATT 2 switches to ON.

(iii) Press ENTER on the pilot's PFD while resetting the PFD 1 circuit breaker.

(iv) Press ENTER on the co-pilot's PFD while resetting the PFD 2 circuit breaker.

(v) INITIALIZING SYSTEM message should be displayed on the PFDs.

(g) On PFD 1, go to FUEL TANK CALIBRATION.

(h) Record current calibration table values for future reference.

(i) Press softkeys 12, 11, 10, and 9 in order to unlock this page:

(j) Press the TNK SEL softkey to activate the cursor in the CURRENT TANK field. Rotate the FMS knob as necessary throughout this procedure to select the RIGHT or LEFT tanks.

(k) Make sure the fuel measurement is set to Gallons.

(l) Make sure the Floor is 0000.00 and the Ceiling is 9999.00 for the left and right tanks before proceeding.

CAUTION: Existing calibration values must be deleted beginning with FULL(132) and working back to EMPTY(0).

(m) Delete all existing calibration values starting from FULL (132).

(n) Do the empty fuel calibration as follows:

Note: Make sure unusable fuel has been added to both tanks and had stabilized for at least 2 minutes.

(i) Select the LEFT tank on PFD 1.

(ii) Press the EMPTY softkey. The cursor will automatically activate and select the CALIBRATE? option. The calibrated value setting will default to 00.00.

(iii) Press the ENT key. A prompt appears requesting overwrite acknowledgment. Select YES and press the ENT key. The G1000 NXi system will 'zero' the actual fuel quantity value to be displayed.

(iv) Select the RIGHT tank on PFD 1.

(v) Press the EMPTY softkey. The cursor will automatically activate and select the CALIBRATE? option. The calibrated value setting will default to 00.00.

(vi) Press the ENT key. A prompt appears requesting overwrite acknowledgment. Select YES and press the ENT key. The system will 'zero' the actual fuel quantity value to be displayed.

(vii) Observe the CALIBRATED TOTAL indication for the RIGHT tank. Verify that it remains at 0.00.

(viii) Select the LEFT tank. Observe the CALIBRATED TOTAL indication for the LEFT tank. Verify that it remains at 0.00.

(ix) On the MFD, verify the fuel quantity indicators correctly point to '0'.

(o) Do the full fuel calibration as follows:

Note: Calibrate the tanks in 5 gallon increments, refer to Table 28-40.1.

(i) Add 5 gallons of fuel to the fuel tank.

(ii) Ensure that a reading is being received from the fuel probes in the CALIBRATION VALUE field.
(iii) Allow the fuel probe to stabilize at least 2 minutes before continuing.
(iv) Enter the amount of usable fuel currently in the tank into the ACTUAL FUEL QUANTITY field and press the ENT key. The cursor automatically selects the “CALIBRATE?” Option.
(v) Press the ENT key again to calibrate.
(vi) Verify a corresponding point appears in the CALIBRATION TABLE.
(vii) Verify that the CALIBRATED TOTAL value equals the amount of usable fuel put into the tank.
(viii) Repeat steps (i) thru (vii) until 130 gallons is reached.
(ix) Add 2 gallons of fuel to the fuel tank.
(x) Ensure that a reading is being received from the fuel probes in the CALIBRATION VALUE field.
(xi) Allow the fuel probe to stabilize at least 2 minutes before continuing.
(xii) Press the FULL key. The cursor automatically selects the “CALIBRATE?” Option.
(xiii) Press the ENT key again to calibrate.
(xiv) Repeat procedure for other fuel tank.
(xv) Record all calibration table values for future reference.

(p) Update the Configuration Module

(i) Select the System Upload Page on PFD1.
(ii) Press the UPDT CFG softkey at the bottom of the display.
(iii) Update configuration Module?' is displayed
(iv) Press ENT to acknowledge the prompt.
(v) The system updates the configuration module located in PFD 1 connector.

(q) Confirm Configuration

(i) Select the Configuration Manager page on PFD1.
(ii) Press the CNFM CFG softkey at the bottom of the display.
(iii) The prompt Confirm configuration as expected configuration appears with OK selected. Press ENT to confirm the configuration.

(r) Set the BATT 1 and BATT 2 switches to off.

(s) Disconnect external electrical power from the airplane (refer to Chapter 24-40).

Table 28-40.1: FUEL LEVEL CALIBRATION TABLE

Unusable Fuel Added Before Empty Tank Calibration:					
Left: 6.7 ± 0.25 Gallons			Right: 6.7 ± 0.25 Gallons		
Note: Wait 2 minutes after adding fuel to allow the fuel level to stabilize before calibrating at each point.					
LEFT			RIGHT		
CALIBRATION POINT	FUEL ADDED (Gallons)	FUEL IN TANK (Gallons)	CALIBRATION POINT	FUEL ADDED (Gallons)	FUEL IN TANK (Gallons)
EMPTY (0)	0	0	EMPTY (0)	0	0
5	5	5	5	5	5
10	5	10	10	5	10
15	5	15	15	5	15
20	5	20	20	5	20
25	5	25	25	5	25
30	5	30	30	5	30
35	5	35	35	5	35
40	5	40	40	5	40
45	5	45	45	5	45
50	5	50	50	5	50
55	5	55	55	5	55
60	5	60	60	5	60
65	5	65	65	5	65
70	5	70	70	5	70
75	5	75	75	5	75
80	5	80	80	5	80
85	5	85	85	5	85
90	5	90	90	5	90
95	5	95	95	5	95
100	5	100	100	5	100
105	5	105	105	5	105
110	5	110	110	5	110
115	5	115	115	5	115
120	5	120	120	5	120
125	5	125	125	5	125
130	5	130	130	5	130
FULL (132)	2	132	FULL (132)	2	132

Figure 28-40.1: Fuel Probes

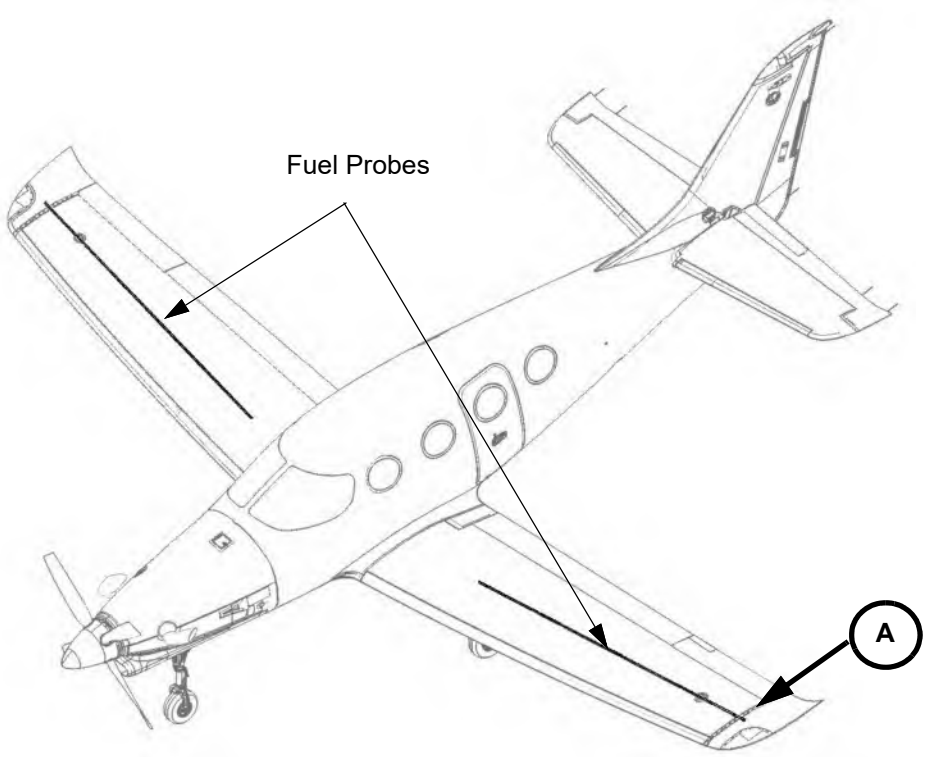

Upper wing skin, aileron bell-crank, and fuel vent not shown for clarity.

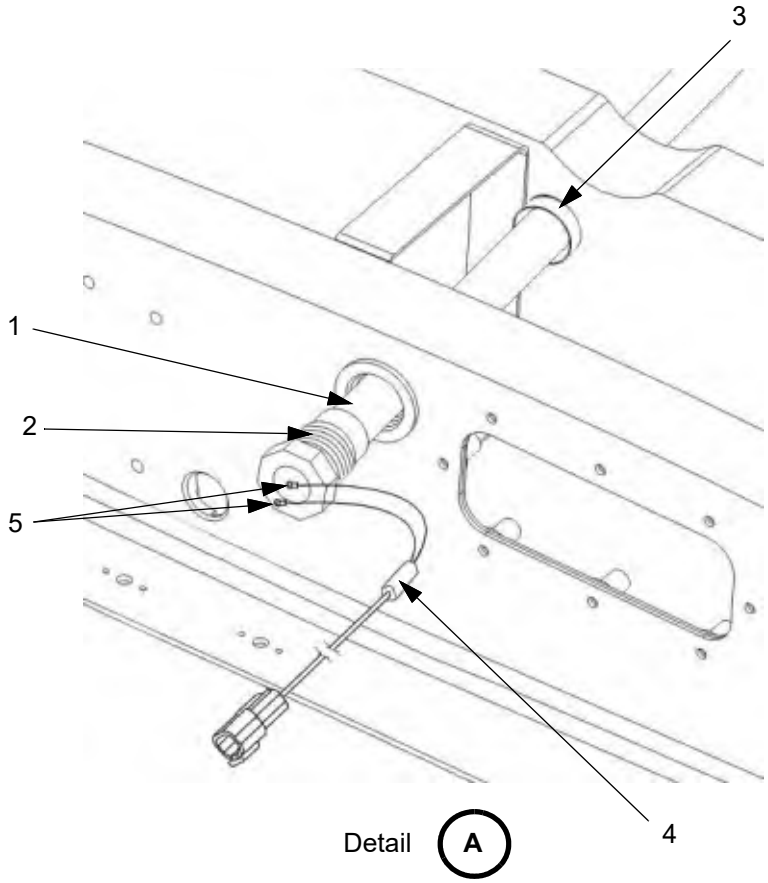

LEGEND

1. Fuel Probe
2. Threaded Coupler
3. Nylon Bushing
4. IMC Interface Module
5. Screw

CHAPTER 29

Hydraulic Power

This Page Intentionally Left Blank

List of Effective Pages

Chapter/Section	Page Number	Effective Date
29-Title	Page 1	02 Jan 2020
29-Title	Page 2	02 Jan 2020
29-LOEP	Page 1	08 Sep 2026
29-LOEP	Page 2	08 Sep 2026
29-TOC	Page 1	08 Apr 2024
29-TOC	Page 2	02 Jan 2020
29-00	Page 1	10 Jul 2025
29-00	Page 2	02 Jan 2020
29-00	Page 3	19 Jan 2023
29-00	Page 4	20 Oct 2023
29-00	Page 5	20 Oct 2023
29-00	Page 6	20 Oct 2023
29-00	Page 7	20 Oct 2023
29-00	Page 8	20 Oct 2023
29-00	Page 9	20 Oct 2023
29-00	Page 10	20 Oct 2023
29-00	Page 11	20 Oct 2023
29-00	Page 12	20 Oct 2023
29-00	Page 13	20 Oct 2023
29-00	Page 14	20 Oct 2023
29-10	Page 1	08 Sep 2026
29-10	Page 2	08 Sep 2026
29-10	Page 3	08 Sep 2026
29-10	Page 4	08 Sep 2026
29-10	Page 5	08 Sep 2026
29-10	Page 6	08 Sep 2026
29-10	Page 7	08 Sep 2026
29-10	Page 8	08 Sep 2026
29-10	Page 9	08 Sep 2026
29-10	Page 10	08 Sep 2026
29-10	Page 11	08 Sep 2026
29-10	Page 12	08 Sep 2026
29-10	Page 13	08 Sep 2026
29-10	Page 14	08 Sep 2026
29-10	Page 15	08 Sep 2026
29-10	Page 16	08 Sep 2026
29-10	Page 17	08 Sep 2026
29-10	Page 18	08 Sep 2026
29-10	Page 19	08 Sep 2026
29-10	Page 20	08 Sep 2026

29-10 ..... Page 21 ..... 08 Sep 2026
29-10 ..... Page 22 ..... 08 Sep 2026
29-10 ..... Page 23 ..... 08 Sep 2026
29-10 ..... Page 24 ..... 08 Sep 2026
29-10 ..... Page 25 ..... 08 Sep 2026
29-10 ..... Page 26 ..... 08 Sep 2026
29-10 ..... Page 27 ..... 08 Sep 2026
29-10 ..... Page 28 ..... 08 Sep 2026
29-10 ..... Page 29 ..... 08 Sep 2026
29-10 ..... Page 30 ..... 08 Sep 2026
29-10 ..... Page 31 ..... 08 Sep 2026
29-10 ..... Page 32 ..... 08 Sep 2026
29-10 ..... Page 33 ..... 08 Sep 2026
29-10 ..... Page 34 ..... 08 Sep 2026
29-10 ..... Page 35 ..... 08 Sep 2026
29-10 ..... Page 36 ..... 08 Sep 2026
29-10 ..... Page 37 ..... 08 Sep 2026
29-10 ..... Page 38 ..... 08 Sep 2026
29-10 ..... Page 39 ..... 08 Sep 2026
29-10 ..... Page 40 ..... 08 Sep 2026
29-10 ..... Page 41 ..... 08 Sep 2026
29-10 ..... Page 42 ..... 08 Sep 2026
29-10 ..... Page 43 ..... 08 Sep 2026
29-10 ..... Page 44 ..... 08 Sep 2026
29-10 ..... Page 45 ..... 08 Sep 2026
29-10 ..... Page 46 ..... 08 Sep 2026
29-10 ..... Page 47 ..... 08 Sep 2026
29-10 ..... Page 48 ..... 08 Sep 2026

29-20 ..... Page 1 ..... 16 May 2022
29-20 ..... Page 2 ..... 16 May 2022
29-20 ..... Page 3 ..... 08 Sep 2026
29-20 ..... Page 4 ..... 10 Jul 2025
29-20 ..... Page 5 ..... 10 Jul 2025
29-20 ..... Page 6 ..... 10 Jul 2025
29-20 ..... Page 7 ..... 10 Jul 2025
29-20 ..... Page 8 ..... 10 Jul 2025
29-20 ..... Page 9 ..... 10 Jul 2025
29-20 ..... Page 10 ..... 10 Jul 2025

Table of Contents

List of Effective Pages ..... 29-LOEP / Page 1
Table of Contents ..... 29-TOC / Page1

Paragraph **Page Number**

Hydraulic Power

1. General ..... 29-00 / Page 1
2. Troubleshooting ..... 29-00 / Page 3

Main

1. Description ..... 29-10 / Page 1
2. Maintenance Practices ..... 29-10 / Page 1
   - A. Hydraulic Pump - Piston Type ..... 29-10 / Page 1
   - B. Hydraulic Pump - Gear Type ..... 29-10 / Page 4
   - C. Reservoir ..... 29-10 / Page 7
   - D. Accumulator ..... 29-10 / Page 14
   - E. Hydraulic Suppressor ..... 29-10 / Page 16
   - F. Hydraulic Inline Filter ..... 29-10 / Page 18
   - G. Hydraulic Lines Forward of the Firewall ..... 29-10 / Page 22
   - H. Hydraulic Lines Aft of the Firewall ..... 29-10 / Page 29
   - I. Hydraulic Lines in the Wing Saddle ..... 29-10 / Page 33
   - J. Depressurize the Hydraulic System ..... 29-10 / Page 38
   - K. Inspection and Testing ..... 29-10 / Page 38
   - L. Hydraulic Reservoir Bleed Air Adjustment/Check ..... 29-10 / Page 41
   - M. Hydraulic System Flush ..... 29-10 / Page 44

Emergency Extension

1. Description ..... 29-20 / Page 1
2. Maintenance Practices ..... 29-20 / Page 1
   - A. Emergency Landing Gear Extension Bottle Assembly ..... 29-20 / Page 1

This Page Intentionally Left Blank

HYDRAULIC POWER

1. General

This airplane has a hydraulic system that extends and retracts the nose and main landing gear using linear hydraulic actuators. When the landing gear is fully retracted, mechanical locks and hydraulic pressure hold the gear up and stowed. When fully extended the landing gear is held in position by mechanical locks in the hydraulic actuators. A hydraulic accumulator is used in the system to reduce cycling times between re-circulation mode and pressurizing mode, protect the system from hydraulic shock, and accelerate landing gear retract and extension times. A suppressor reduces hydraulic shock and system noise. Plumbing for the system is a combination of stainless steel tubing, hoses, and AN fittings.

Pressure for the system is given by an engine driven pump with a splined drive shaft. Epic Aircraft allows for one of the following two styles of pumps to be used, the two styles of pumps are shown in figure 29-10.13:

For models equipped with the piston pump, operating pressure for the system is 2500 psi with a flow rate of 3 to 3.5 US gallons per minute.

For models equipped with the gear pump, operating pressure for the system is 2500 psi with a flow rate of 2.2 US gallons per minute.

If the main system fails, an emergency subsystem may be used to force the landing gear down and locked. This subsystem extends the landing gear using a tank of pressurized nitrogen that is released using a manually operated valve.

Hydraulic system maintenance is done using a hydraulic service cart while the airplane is on the ground and the engine is off. The connection ports for the service cart are on the forward right side of the hydraulic reservoir and are accessed by removing the airplane belly panels.

K003-K085 (excluding K014), refer to the current revision of the E1000 Wiring Manual, P/N SK05000002.

K014, K086 and on, refer to the current revision of the E1000 Wiring Manual, P/N SK05003002.

Figure 29-00.1: Hydraulic System

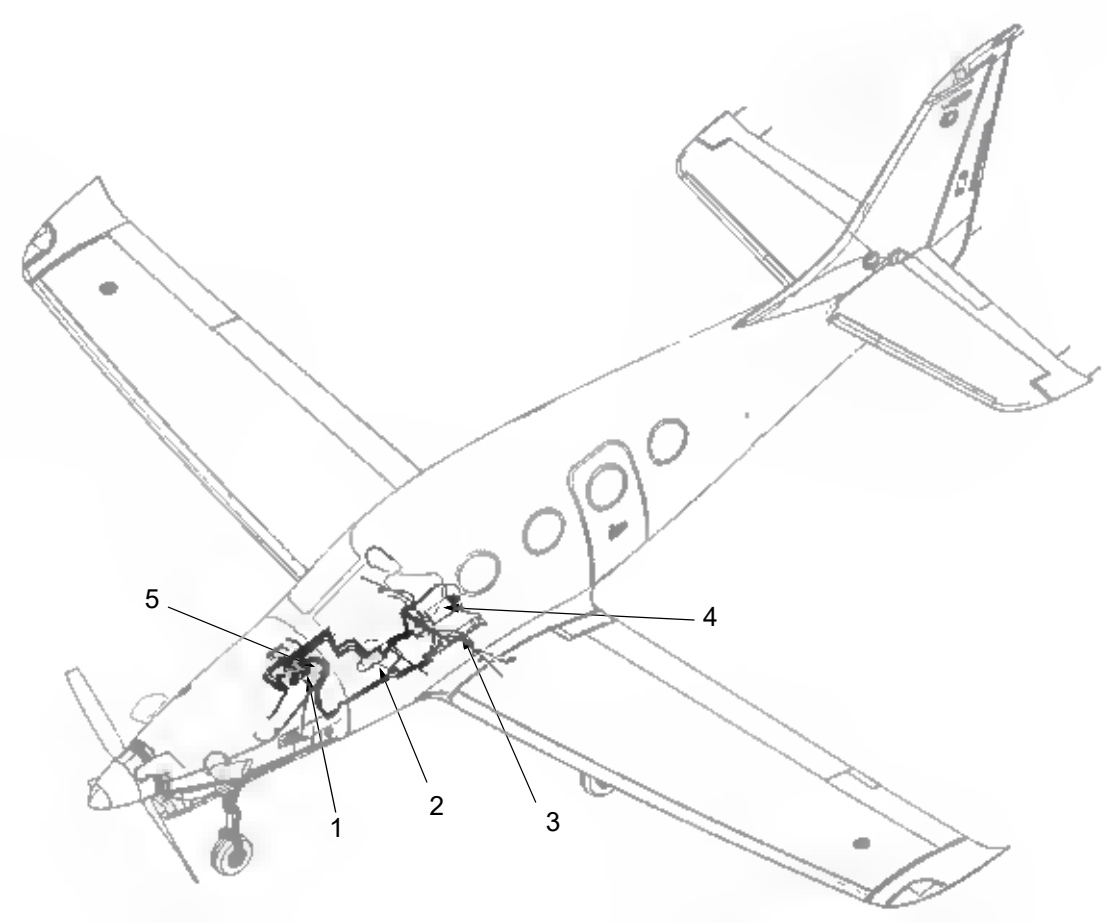

LEGEND

1. Engine Driven Hydraulic Pump
2. Emergency Landing Gear Extension System
3. Accumulator
4. Reservoir
5. Suppressor

2. Troubleshooting

Problem	Probable Cause	Solution
HYD PRESS warning light remains on	Hydraulic fluid level is low.	Service the hydraulic reservoir.
	Worn pump which can't pressurize and reach the pressure switch setting of 2550psi.	Test the hydraulic system on the airplane (airplane on jacks). Put pressure gauge into the system to check and see if the pressure switch setting of 2550 psi is being reached.
	Pressure switch failure. Switch wont actuate to place the system into re-circulation mode.	If pressure switch is good check the health of the pump. Pull the pump and test on ground test cart.
	Landing gear position switches not being made in the retracted position.	Adjust/replace landing gear position switch(es).
	Pressure relief valve is stuck open, leaking internally, or opening at too low of a pressure.	Troubleshoot and replace the pressure relief valve.
Landing gear extends too slowly.	Hydraulic pump is worn and not providing adequate flow and pressure.	Check the Nitrogen charge in the accumulator and recharge if necessary.
	Hydraulic Accumulator has lost its Nitrogen charge.	If the accumulator is charged, pull the hydraulic pump and check it on a ground test cart.
Landing gear retracts too slowly.	Hydraulic pump is worn and not providing adequate flow and pressure.	Check the Nitrogen charge in the accumulator and recharge if necessary.
	Hydraulic Accumulator has lost its Nitrogen charge.	If the accumulator is charged, pull the hydraulic pump and check it on a ground test cart.

Problem	Probable Cause	Solution
Landing gear fails to extend.	Gear not down. - mechanical failure of actuator (jammed, etc). - Hydraulic system failure. Switch failure.	Test gear on ground with test cart to ensure that gear extends and locks. Replace gear down switches
Landing gear fails to retract.	Gear not up. - mechanical failure of actuator (jammed, etc). - Hydraulic system failure. Landing gear door not correctly installed and contacting the wing skin.	Test gear on ground with test cart to ensure that gear extends and locks. Check landing gear door alignment and fastener torque.
Hydraulic pump cavitates.	Bleed air pressure on the reservoir is too low.	Adjust or attach bleed air pressure.
	Fluid in the hydraulic reservoir is low.	Add hydraulic fluid to the reservoir.
Hydraulic system is noisy	Bladder pressure in the hydraulic suppressor is low. Hydraulic fluid level is low.	Service the hydraulic suppressor. Service the hydraulic reservoir.
Emergency landing gear extension bottle can't be filled and wont hold pressure.	Nitrogen bottle over pressure burst disc has burst.	Install a new burst disc.
High pitch whine on startup.	Normal operation of hydraulic system pressurizing.	No corrective action needed.
Grinding/Rough noise from hydraulic pump on start.	Possible air in hydraulic lines. This can be maintenance induced if the hydraulic system was opened and may work itself out of the system with use.	If sounds persists, perform landing gear swings and dry motor the engine after doing maintenance on hydraulics to help push air out of the system.
HYD PRESS CAS message and landing gear slow to extend.	Accumulator check valve bleeding pressure preventing landing gear to extend at normal rate.	Replace pressure check valve.

Problem	Probable Cause	Solution
Black rubber debris found in the hydraulic filter.	Possible failure of the hydraulic suppressor. Hydraulic suppressor inner bladder may be deteriorating.	Remove and inspect the hydraulic suppressor. Replace/repair hydraulic suppressor if needed and flush system. Comply with SB-0042.
Hydraulic pump making whine/high pitch noise in relation to engine RPM.	Defective hydraulic pump.	Replace hydraulic pump
Pressure line from the hydraulic pump to the suppressor leaking/burst.	Vibration and resonance causing weakness in pressure line.	Comply with SB-0032.
HYD PRESS CAS after engine start.	Possible hydraulic pump failure. Check for sheared hydraulic pump drive shaft, leakage at the hydraulic pump shaft seal, and metallic debris in the hydraulic filter.	Inspect and test the overpressure valves (2700PSI and 3000PSI) for correct operation. Inspect and test the pressure switch for correct operation. Replace hydraulic pump
Hydraulic system cycling excessively.	Possible internal leak in the pressure check valve allowing system pressure to drop. Faulty or intermittent pressure switch.	Replace the pressure check valve or pressure switch.

Figure 29-00.2: Schematic - Overview

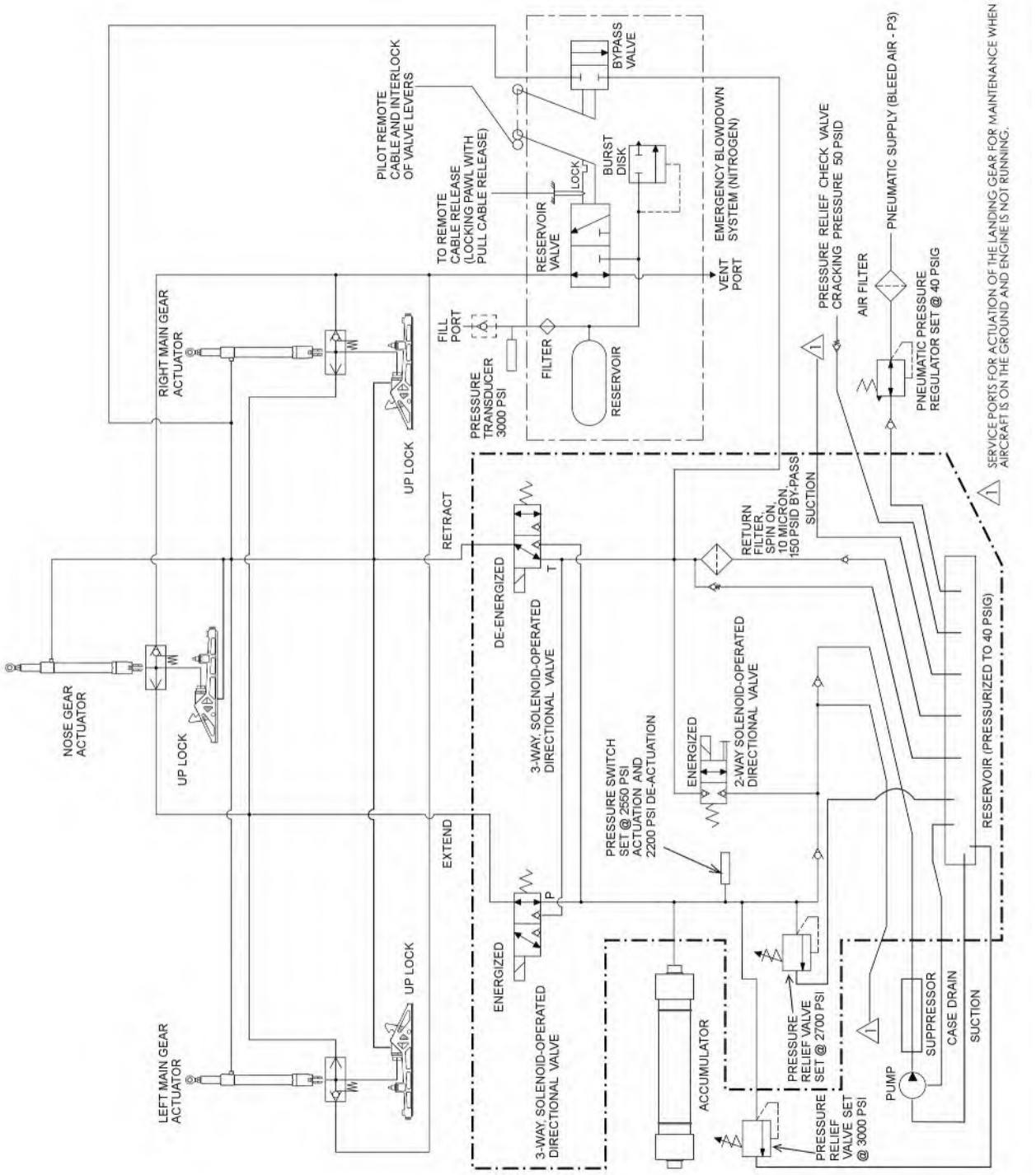

Figure 29-00.3: Schematic - Gear Extend, Pump Pressurizing System, Loading Accumulator

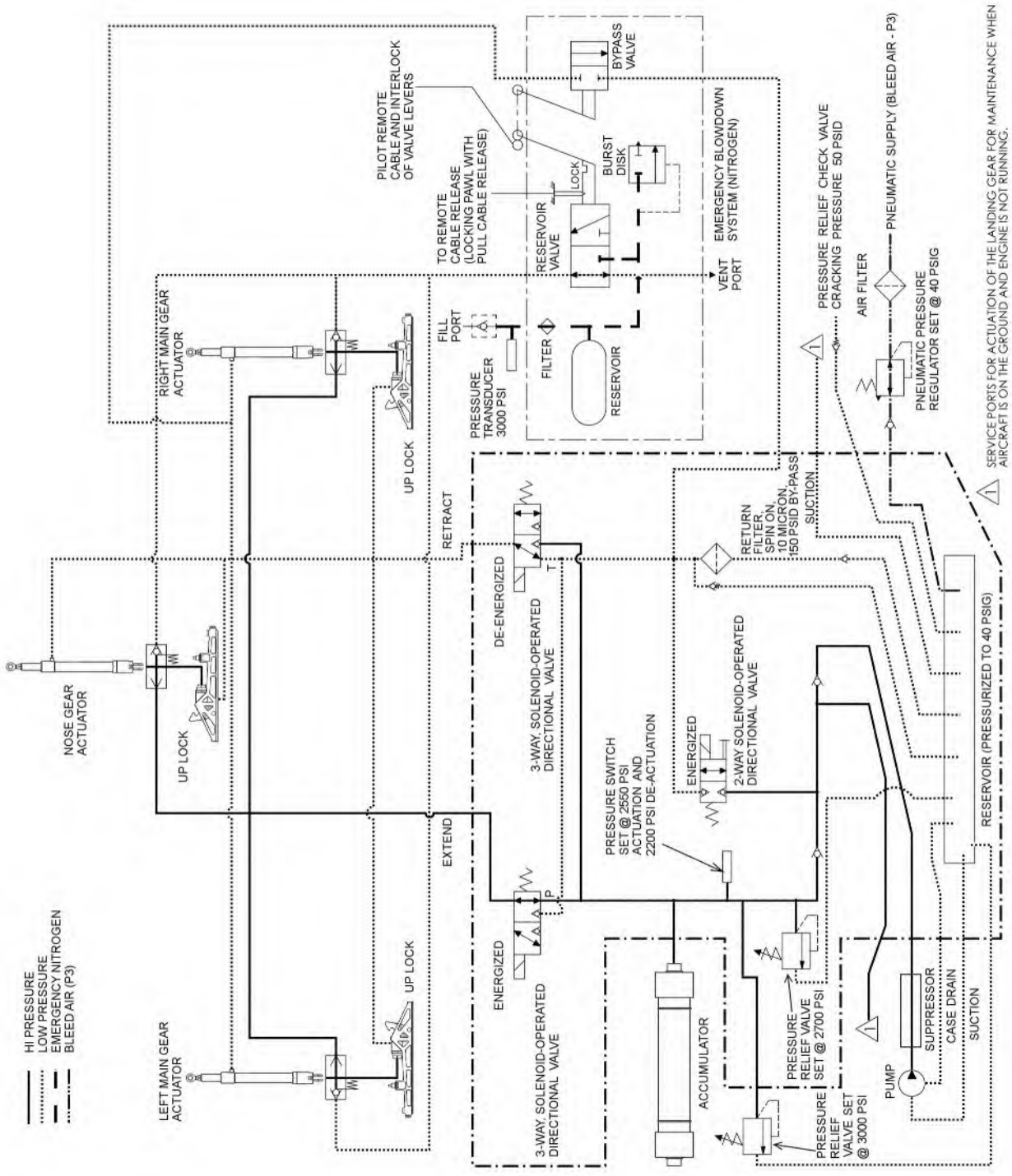

Figure 29-00.4: Schematic - Gear Extend, Pump Re-Circulating

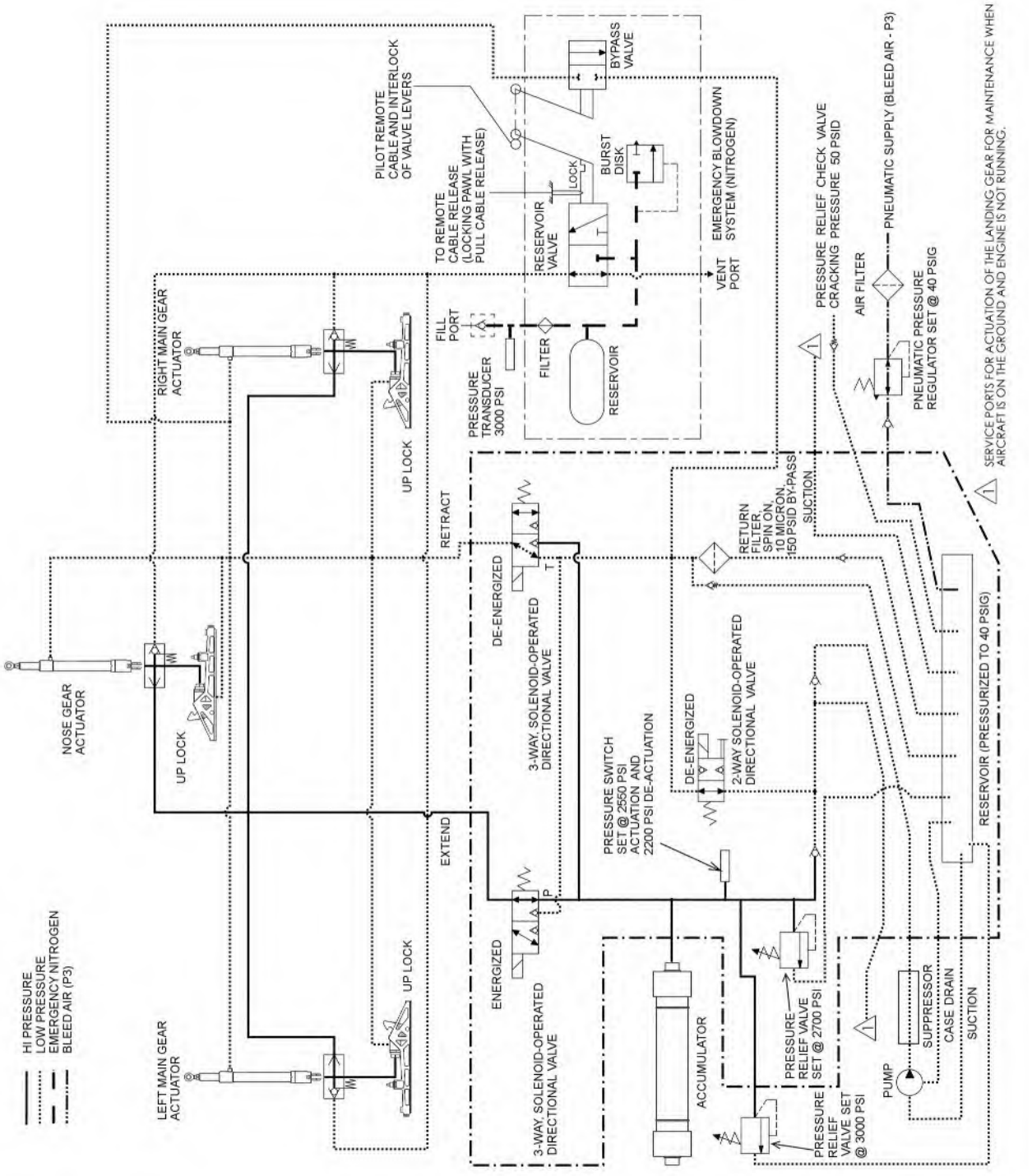

Figure 29-00.5: Schematic - Gear Retract, Pump Pressurizing System, Loading Accumulator

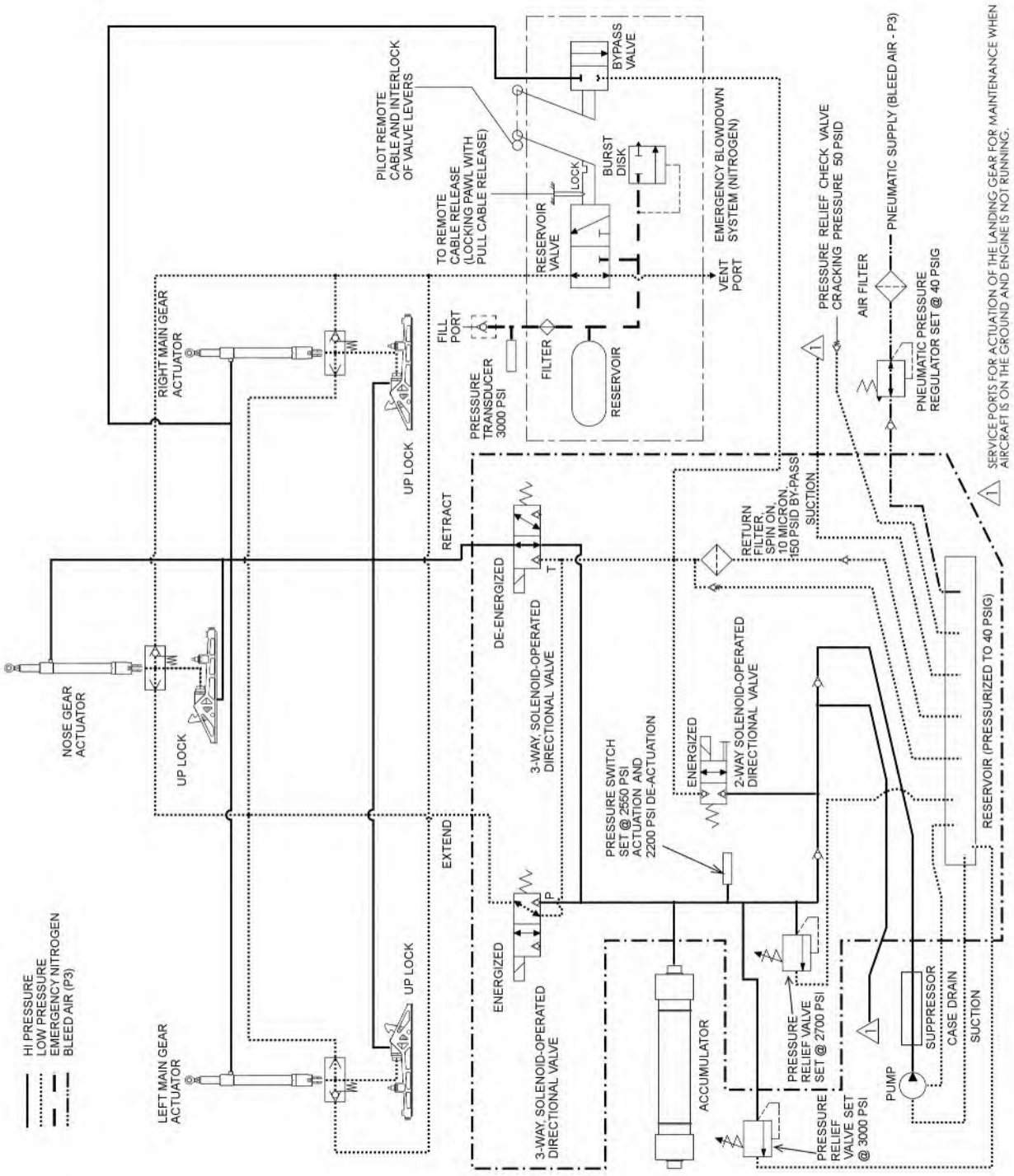

Figure 29-00.6: Schematic - Gear Retract, Pump Re-Circulating

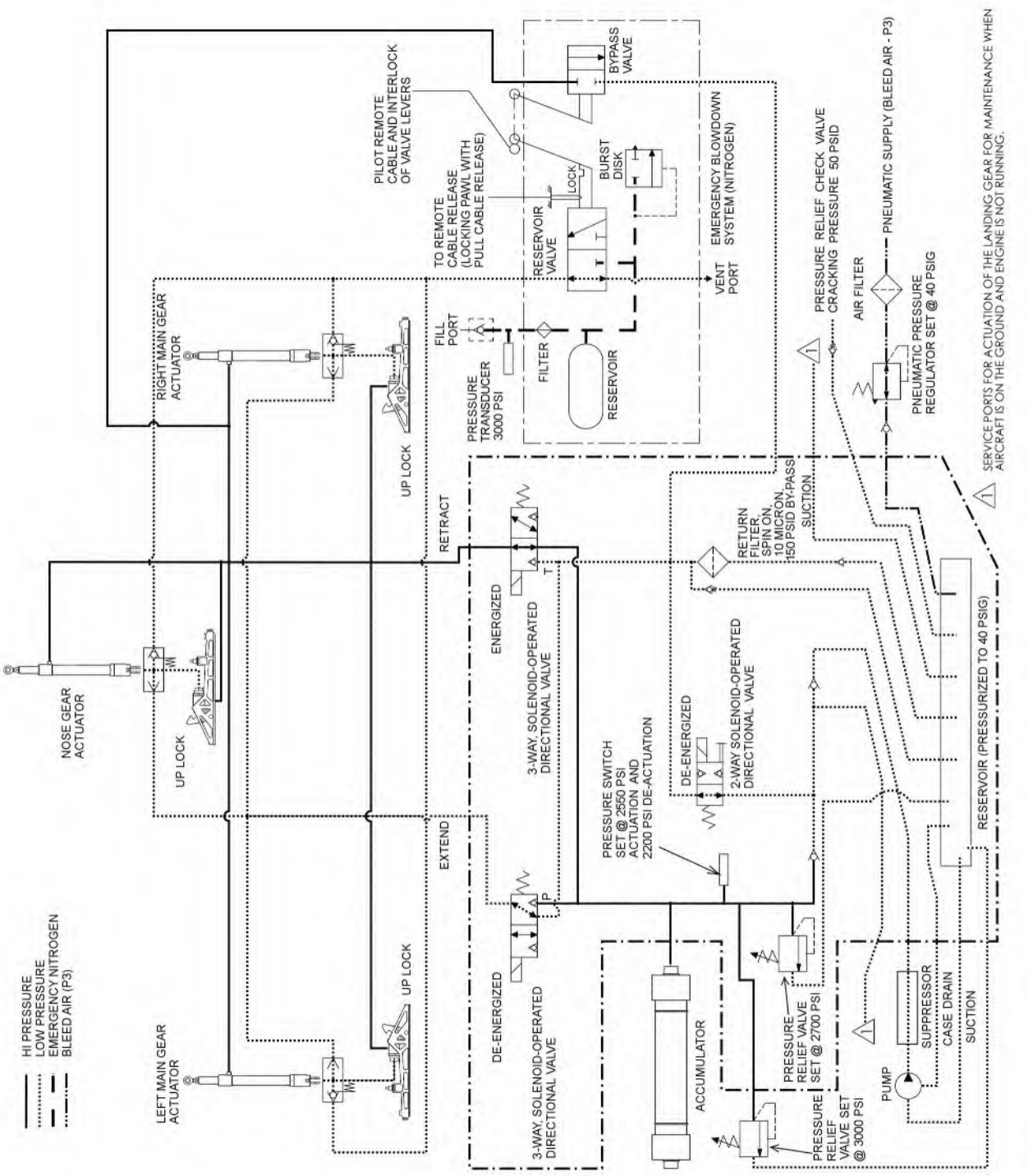

Figure 29-00.7: Schematic - Gear Extend, Emerg. Blowdown, Pmp. Failure, No Pres., No Flow

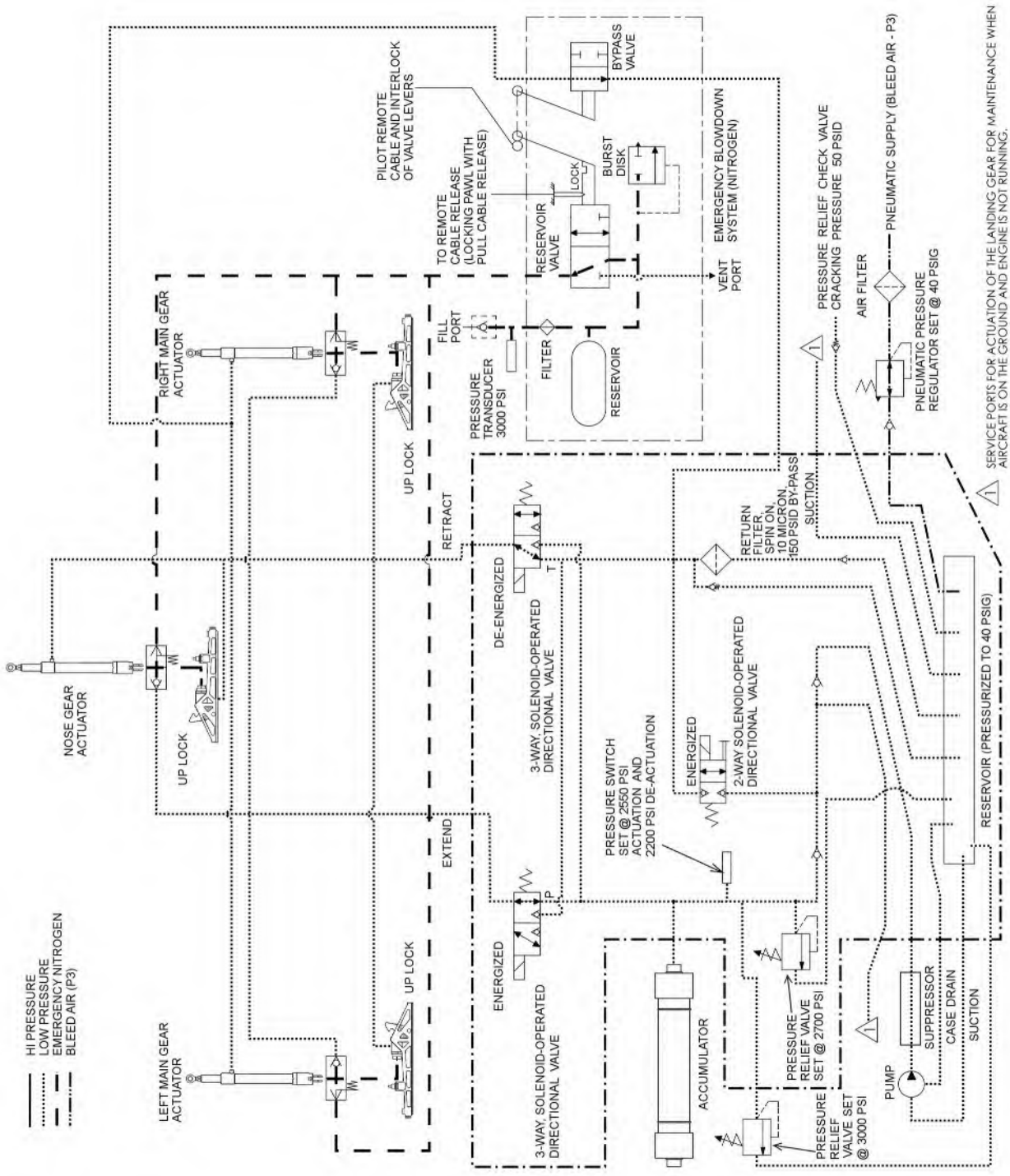

Figure 29-00.8: Schematic - Gear Extend, Emerg. Blowdown, Electrical Failure

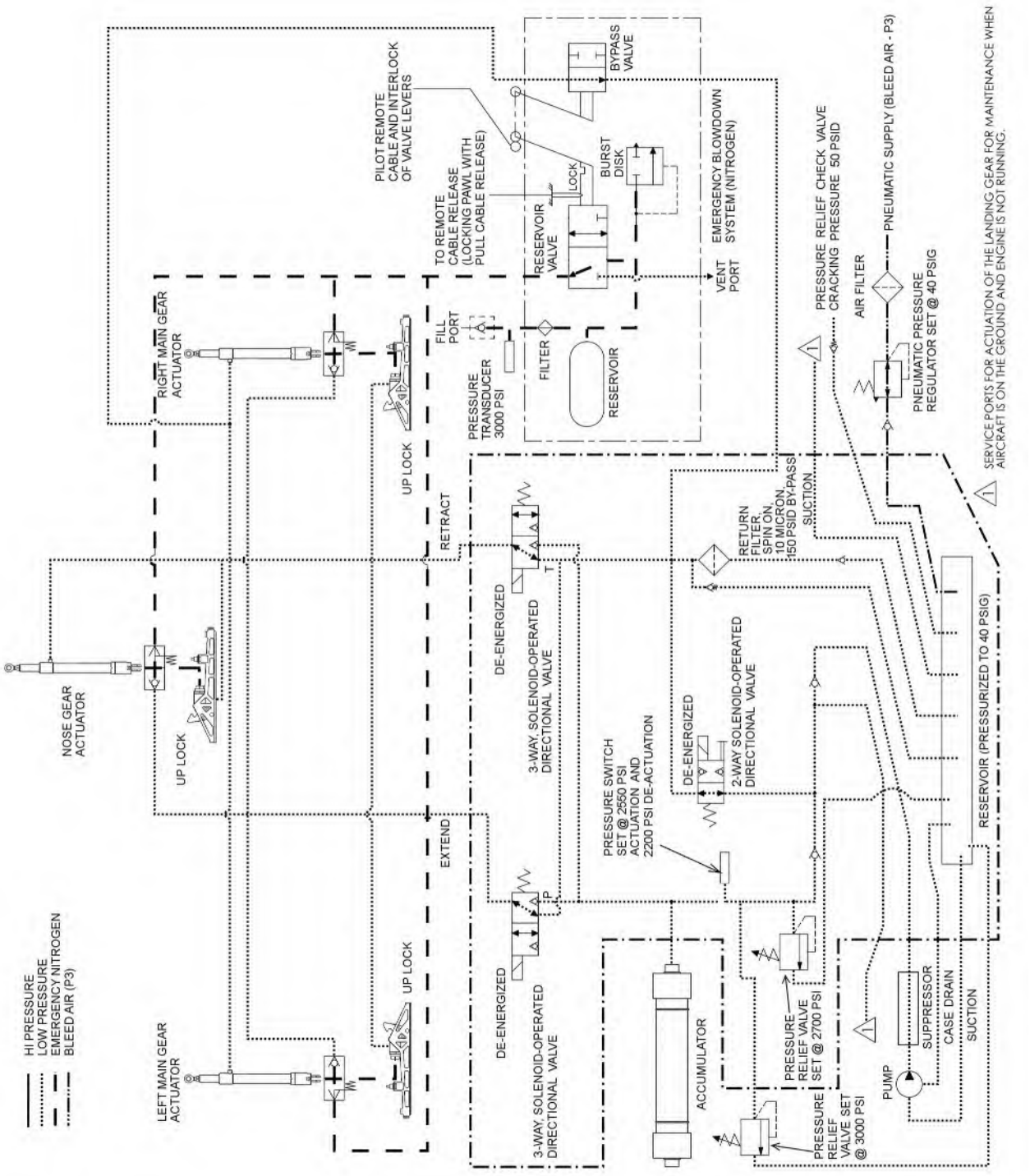

Figure 29-00.9: Schematic - Gear Extend, On Grnd, Aircraft Shutdown, Accumulator Charged

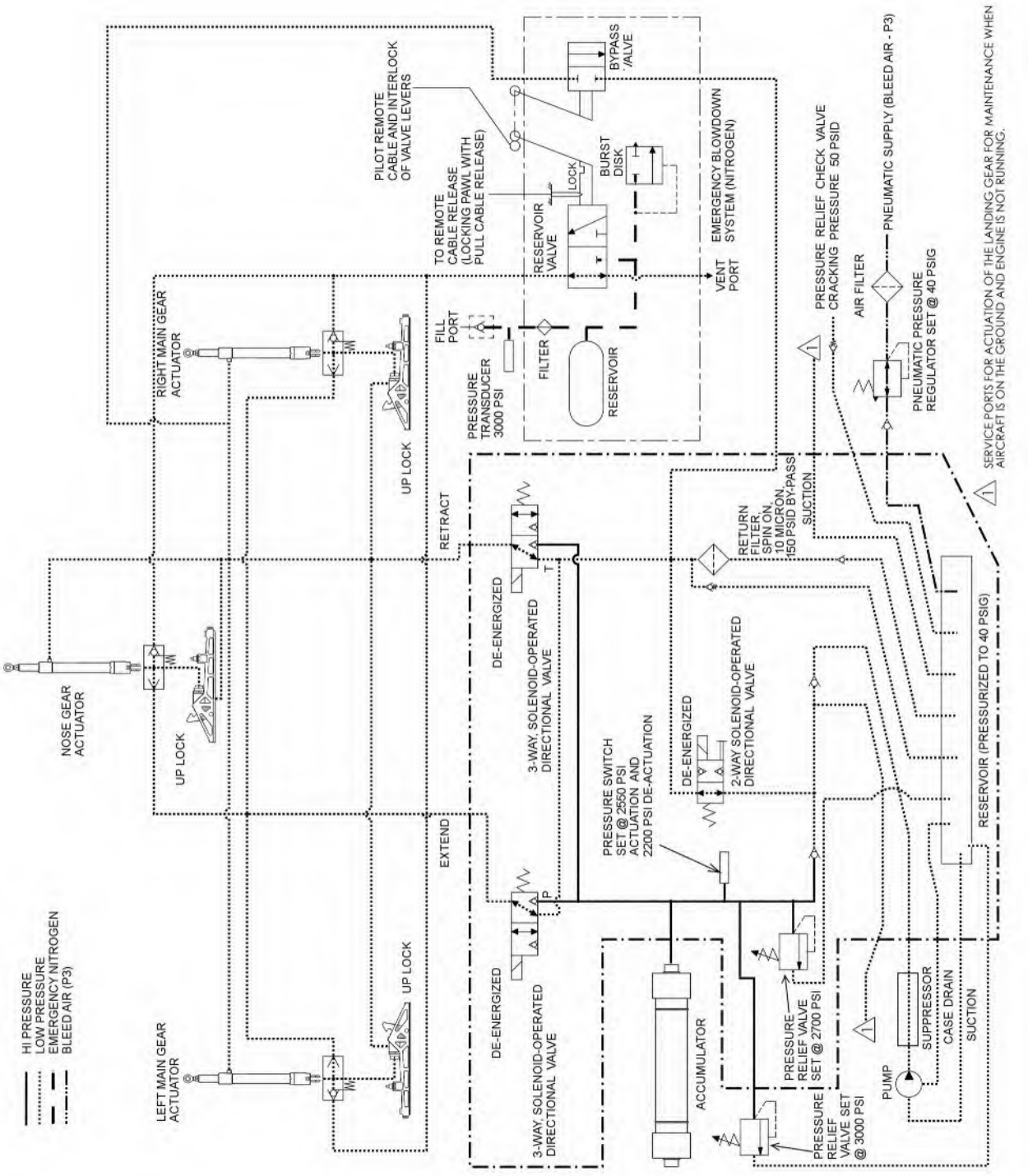

Figure 29-00.10: Schematic - Gear Extend, On Grnd, AC Shutdown, Pwr. Off, Accum. Discharged

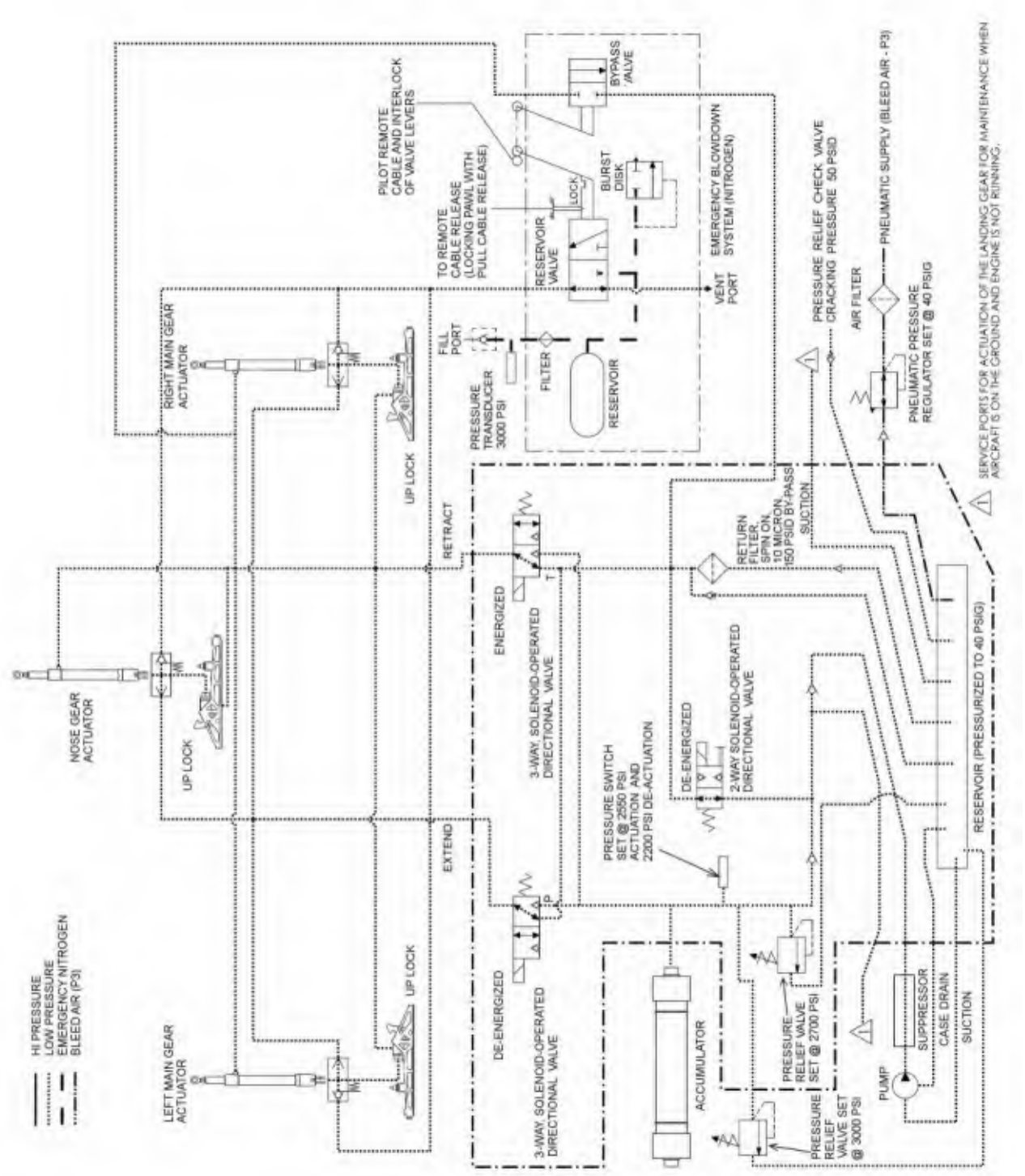

MAIN

1. Description

Linear hydraulic actuators are used to retract and extend the landing gear on this airplane. Mechanical locks and hydraulic pressure secure the landing gear when it is retracted. Mechanical locks integral to the hydraulic actuators secure the landing gear when it is extended.

The engine driven hydraulic pump pressurizes the hydraulic system to 2500 psi. Aircraft with the piston-type pump operate at 3 to 3.5 GPM flow, aircraft with the gear-type pump operate at 2.2 US GPM flow. An accumulator pressurized with nitrogen to 1200 psi is used to reduce cycling times between re-circulation mode and pressurization mode of the pressure relief valve, protect the system from hydraulic shock, and accelerate landing gear extension and retraction. For aircraft equipped with the piston hydraulic pump, a suppressor reduces hydraulic shock and system noise. For aircraft equipped with the gear hydraulic pump, a high pressure filter replaces the suppressor. The accumulator and the system fluid reservoir are located under the cabin floor and are accessed from the underside of the airplane by removing the belly panels.

Hydraulic system plumbing is a combination of stainless steel tubing, hoses, and steel AN fittings.

2. Maintenance Practices

A. Hydraulic Pump - Piston Type

Refer to Figure 29-10.11: Hydraulic Pump Identification to visually identify the type of pump installed.

(1) Removal

(a) Set the BATT 1 and BATT 2 switches to off.

(b) Disconnect external electrical power from the airplane (refer to Chapter 24-40).

(c) Remove the cowling (refer to Chapter 71-10).

WARNING: The hydraulic lines can contain high pressures after engine shutdown. The sudden release of hydraulic fluid under pressure could cause serious injury or death. The system must be depressurized before it is opened for maintenance.

(d) Make sure the hydraulic system is depressurized (refer to Chapter 29-10).

(e) Disconnect the pressure, return, and drain lines from the pump.

(f) Cap and plug all open lines and fittings.

(g) Remove the pump as follows:

(i) For drilled head bolts, cut and remove the safety wire. Remove the (4) bolts and (4) washers.

(ii) For non-drilled head bolts, remove the (4) bolts, (4) lockwashers, and (4) washers.

(iii) Remove the pump from the gearbox.

(h) Remove and discard the gasket.

(i) Remove the hydraulic reservoir filter and inspect it for debris. If debris is found, replace the filter and perform the hydraulic system flush, refer to Chapter 29-10.2.M.

(2) Installation

(a) Clean the spline drive using solvent then inspect it for deformation, nicks, spalling, or other damage.

(b) Fill the pump case through the case drain port using hydraulic fluid (Mil-PRF-83282 or Mil-PRF-87257).

(c) Fill the coupling shaft splines in the pump drive shaft 1/3 full and coat the mating splines using molybdenum sulfide grease (MIL-G-21164).

Note: The drilled head mounting bolts and washers may be replaced with standard bolts, lockwashers, and washers to simplify installation. Refer to the Parts Catalog for the Epic E1000 for part number information.

(d) Put the pump in position on the gearbox mounting pad.

(e) Install the fasteners as follows:

(i) For drilled head bolts, install the (4) bolts and (4) washers. Torque the bolts to 50-70 in-lbs. Install the safety wire.

(ii) For non-drilled head bolts, install the (4) bolts, (4) lockwashers, and (4) washers. Torque the bolts to 50-70 in-lbs.

(f) Connect the pressure, return, and drain lines to the pump.

(g) Service hydraulic system as needed (refer to Chapter 12-10).

(h) Do an operational check of the hydraulic pump as follows:

(i) Start the engine (refer to Chapter 71-00).

(ii) Operate the engine above 51% N_G for at least 30 seconds.

(1) (SN: K003-K085, except K014) Make sure the HYD PRESS Caution does not illuminate.

(2) (SN: K014, K086 and On) Make sure the HYD PUMP Caution does not illuminate.

(iii) Shut down the engine (refer to Chapter 71-00).

(iv) Inspect the hydraulic pump and associated lines and fittings for leaks.

(i) Install the cowling (refer to Chapter 71-10).

Figure 29-10.1: Hydraulic Pump - Piston Type

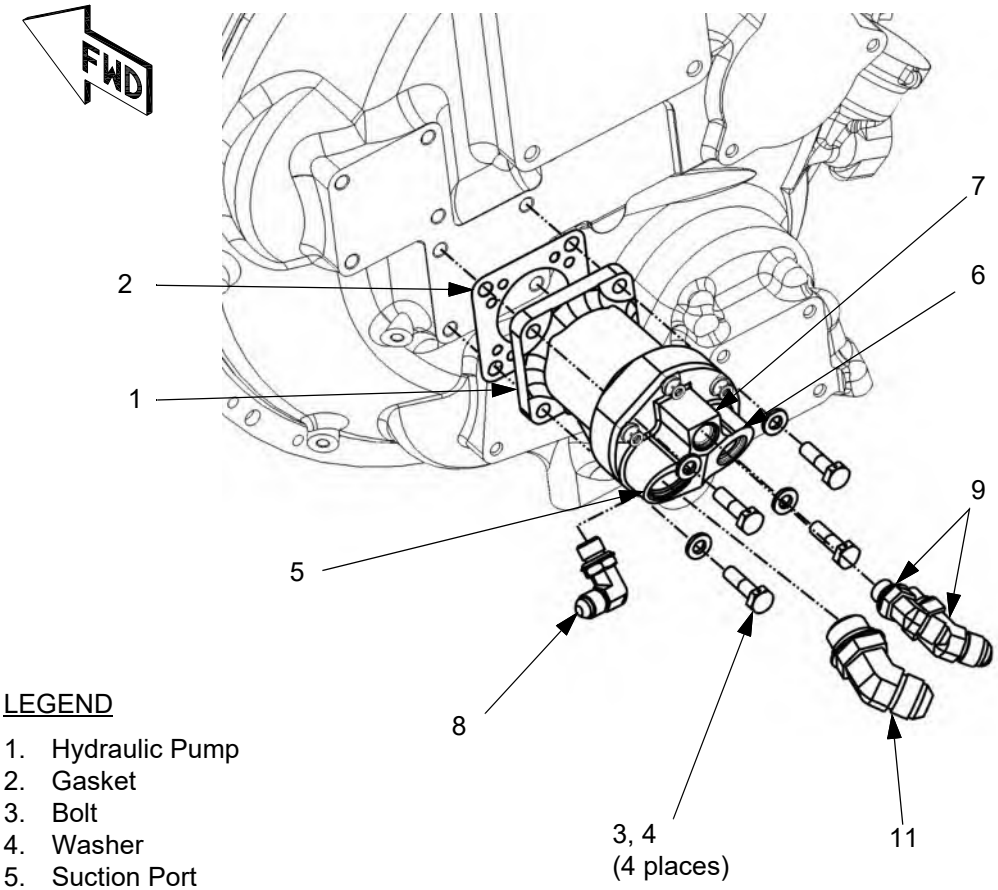

LEGEND

1. Hydraulic Pump
2. Gasket
3. Bolt
4. Washer
5. Suction Port
6. Pressure Port
7. Case Drain
8. Elbow Fitting
9. 45° Fitting
10. Straight Fitting

B. Hydraulic Pump - Gear Type

Refer to Figure 29-10.11: Hydraulic Pump Identification to visually identify the type of pump installed.

(1) Removal

(a) Set the BATT 1 and BATT 2 switches to off.

(b) Disconnect external electrical power from the airplane (refer to Chapter 24-40).

(c) Remove the cowling (refer to Chapter 71-10).

WARNING: The hydraulic lines can contain high pressures after engine shutdown. The sudden release of hydraulic fluid under pressure could cause serious injury or death. The system must be depressurized before it is opened for maintenance.

(d) Make sure the hydraulic system is depressurized (refer to 29-10.2.H).

(e) Disconnect the pressure, return, and drain lines from the pump.

(f) Cap and plug all open lines and fittings.

(g) Remove the fasteners that attach the pump to the gearbox.

(h) Remove the pump from the gearbox.

(i) Remove and discard the gasket.

(j) Remove the hydraulic reservoir filter and inspect it for debris. If debris is found, replace the filter and perform the hydraulic system flush, refer to Chapter 29-10.2.M.

(k) Remove the inline filter and inspect it for debris. If debris is found, clean or replace the filter as needed, refer to Chapter 29-10.2.F. Perform the hydraulic system flush, refer to Chapter 29-10.2.M.

(2) Installation

(a) Clean the spline drive using solvent then inspect it for deformation, nicks, spalling, or other damage.

(b) Install a new gasket.

(c) Fill the coupling shaft splines in the pump drive shaft 1/3 full and coat the mating splines using molybdenum sulfide grease (MIL-G-21164).

(d) Put the pump in position on the gearbox mounting pad.

(e) Install the (4) bolts, (4) lockwashers, and (4) washers. Torque the bolts to 50-70 in-lbs.

(f) Connect the pressure and return lines to the pump.

(g) Perform a pump bleeding procedure, refer to Figure 29-10.1 “Gear Pump Bleeding Equipment” on page 48

(i) Connect shop air to the suction-side QD.

(ii) Install the QD fittings to the aircraft reservoir.
(iii) Place a catch pan on the pressure-side QD.
(iv) Apply aircraft power to the reservoir.
(v) Slowly open the valve on the pressure-side QD until the air is expelled and oil flows freely into the catch pan.
(vi) Perform a dry motor run. Oil flow into catch pan should increase (refer to Chapter 71-00).

Note: Step vi is optional. Step v should be ample to properly bleed the pump.

(vii) Close the valve, remove the air line, and allow reservoir pressure to normalize.
(viii) Turn off aircraft power and remove both QD fittings.
(ix) Ground run the aircraft and verify that the HYD CAS message does not appear.

(h) Do an operational check of the hydraulic pump as follows:
(i) Start the engine (refer to Chapter 71-00).
(ii) Operate the engine above 51% N_G for at least 30 seconds.
(1) (SN: K003-K085, except K014) Make sure the HYD PRESS Caution does not illuminate.
(2) (SN: K014, K086 and On) Make sure the HYD PUMP Caution does not illuminate.
(iii) Inspect the hydraulic pump and associated lines and fittings for leaks.

(i) Install the cowling (refer to Chapter 71-10).

Figure 29-10.2: Hydraulic Pump - Gear Type

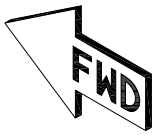

LEGEND

1. Hydraulic Pump
2. Gasket
3. Bolt
4. Washer
5. Lock Washer
6. Suction Port
7. Pressure Port
8. Union
9. 90° Fitting

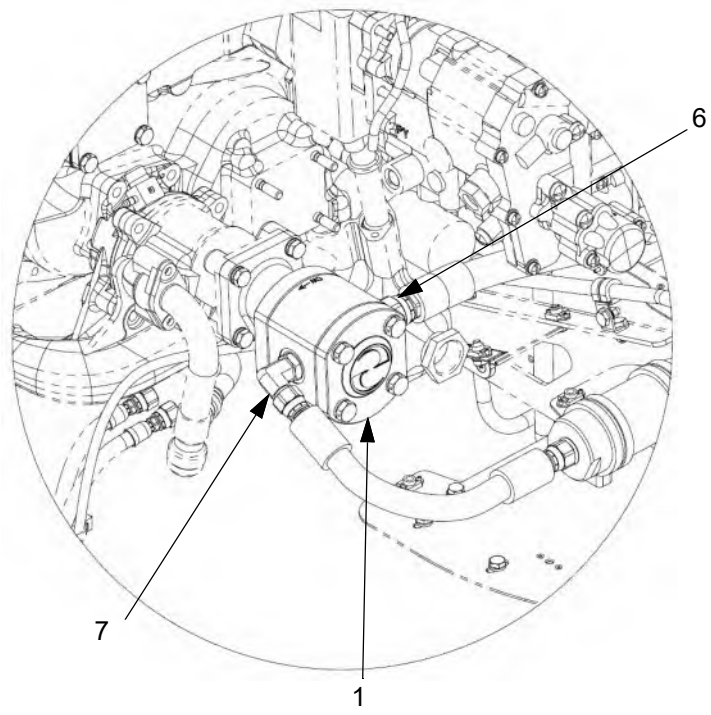

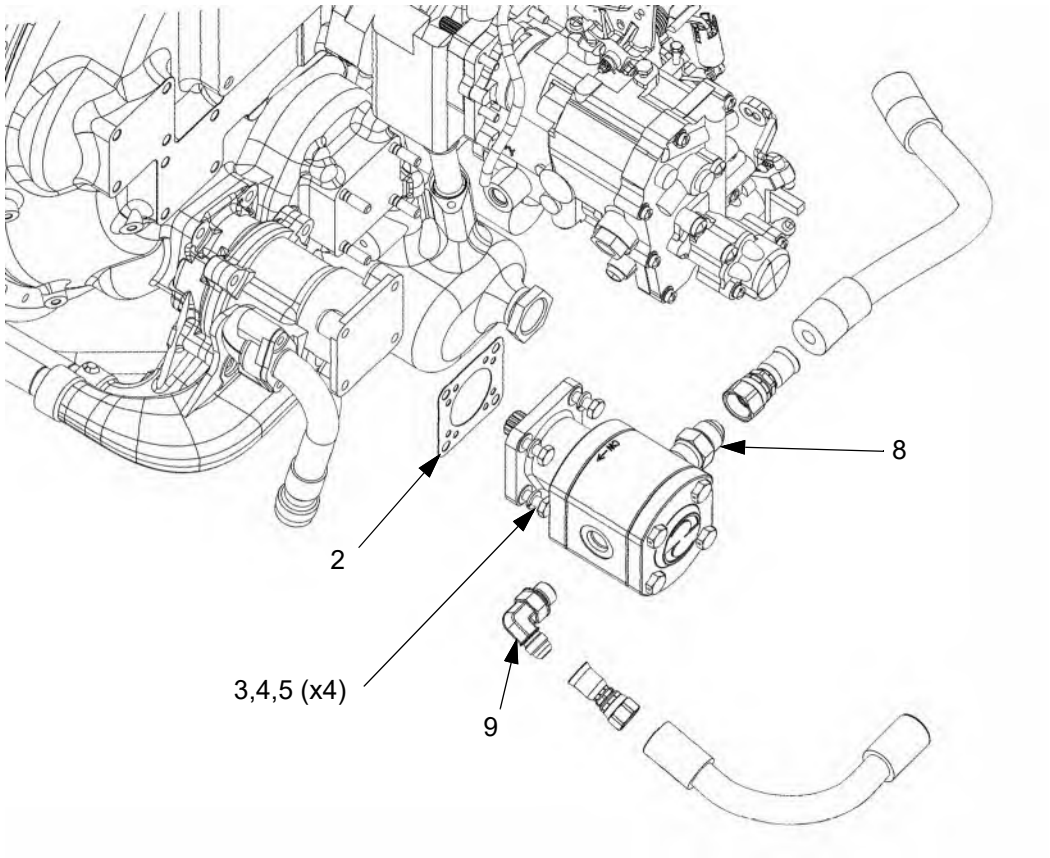

C. Reservoir

Contact Epic Aircraft, LLC for instructions for any reservoir maintenance beyond what is listed in this section.

WARNING: The hydraulic lines can contain high pressures after engine shutdown. The sudden release of hydraulic fluid under pressure could cause serious injury or death. The system must be depressurized before it is opened for maintenance.

(1) Set the BATT 1 and BATT 2 switches to off.

(2) Disconnect external electrical power from the airplane (refer to Chapter 24-40).

(3) Reservoir Assembly

(a) Removal

(i) Make sure the hydraulic system is depressurized (refer to 29-10.2.H).
(ii) Remove the airplane belly panels (refer to Chapter 57-10).
(iii) Disconnect the electrical connectors from the reservoir.
(iv) Disconnect the pneumatic and hydraulic lines from the reservoir.
(v) Cap and plug all open lines and fittings.
(vi) Drain the reservoir.
(vii) Remove the bolts and washers that attach the reservoir to the mount.
(viii) Remove the reservoir from the airplane.

(b) Installation

(i) Put the reservoir in position and install the bolts and washers that attach it to the mount.
(ii) Connect the pneumatic and hydraulic lines to the reservoir.
(iii) Connect the electrical connectors to the reservoir.
(iv) Service the hydraulic system (refer to Chapter 12-10).
(v) Do the landing gear operational check (refer to Chapter 32-30).
(vi) Inspect the hydraulic reservoir and associated lines and fittings for leaks.

(4) Filter Element

(a) Removal

(i) Make sure the hydraulic system is depressurized (refer to 29-10.2.H).
(ii) Remove the airplane belly panels (refer to Chapter 57-10).
(iii) Place rags around the filter to catch any spilled hydraulic fluid.
(iv) Rotate the filter counter clockwise to remove it from the reservoir.

(b) Installation

(i) Apply a light coating of hydraulic fluid to the filter o-ring of the new filter.
(ii) Install the filter and tighten 3/4 turn past first contact of the o-ring.
(iii) Pressurize the hydraulic system and inspect the filter for leaks.
(iv) Install the airplane belly panels (refer to Chapter 57-10).

(5) Filter Adapter

(a) Removal

(i) Remove the filter element, refer to step (4).
(ii) Bend the locking tab on the lock washer to allow the filter adapter to rotate.
(iii) Remove the filter adapter from the reservoir assembly.
(iv) Discard the o-ring and lock washer.

(b) Installation

(i) Install a new o-ring on the adapter.
(ii) Lubricate the o-ring with hydraulic fluid.
(iii) Put the lock washer in position on the reservoir assembly with the anti-rotation tab in either recess on the housing.
(iv) Install the adapter in the housing and torque to 230-260 in-lbs.
(v) Bend the lock washer against one of the wrench flats on the adapter to prevent rotation of the adapter.
(vi) Install the filter element, refer to step (4).

(6) Extend, Retract, or Pressure Solenoid

(a) Removal

(i) Make sure the hydraulic system is depressurized (refer to 29-10.2.H).
(ii) Remove the airplane belly panels (refer to Chapter 57-10).
(iii) Disconnect the electrical connector from the solenoid.
(iv) Remove the safety wire and remove the mounting screws.
(v) Carefully remove the solenoid from the housing.
(vi) Remove and discard the o-rings and retaining rings from the solenoid.

(b) Installation

(i) Install new o-rings and retaining rings of the solenoid.
(ii) Lubricate the o-rings with hydraulic fluid.
(iii) Carefully put the solenoid in position in the housing.
(iv) Install the screws that attach the solenoid to the housing.
(v) Safety wire the screws.
(vi) Connect the electrical connector to the solenoid.
(vii) Service the hydraulic system as needed (refer to Chapter 12-10).
(viii) Do the landing gear operational check (refer to Chapter 32-30).
(ix) Inspect the solenoid for leaks.

(7) Pressure Switch

(a) Removal

(i) Make sure the hydraulic system is depressurized (refer to 29-10.2.H).
(ii) Remove the airplane belly panels (refer to Chapter 57-10).
(iii) Disconnect the electrical connector from the pressure switch.
(iv) Unscrew the pressure switch from the housing.
(v) Remove and discard the o-ring.

(b) Installation

(i) Install a new o-ring on the pressure switch.
(ii) Lubricate the o-ring with hydraulic fluid.
(iii) Install the pressure switch in the housing and torque to 50-65 in-lbs.

(iv) Connect the electrical connector to the pressure switch.

(v) Do an operational check of the pressure switch as follows:

(1) Connect a ground power unit to the airplane (refer to Chapter 24-40).

(2) Connect a hydraulic service cart with a calibrated pressure gauge to the airplane.

CAUTION: Make sure the landing gear selector is in the DOWN position and all three green (NOSE, LEFT, and RIGHT) down and locked indicators are present both annunciator panels, and green (DN) indications are present on the MFD.

(3) Set the BATT 1 and BATT 2 switches to ON.

(4) Turn on the hydraulic service cart.

(5) Watch the pressure gauge on the hydraulic service cart and make sure pressure builds to 2,515 +/-75 psi before shifting to re-circulation mode (less than 100 psi).

(6) Turn off the hydraulic service cart.

(7) Set the BATT 1 and BATT 2 switches to off.

(8) Disconnect the hydraulic service cart.

(9) Disconnect the ground power unit.

Figure 29-10.3: Hydraulic Reservoir (Sheet 1 of 4)

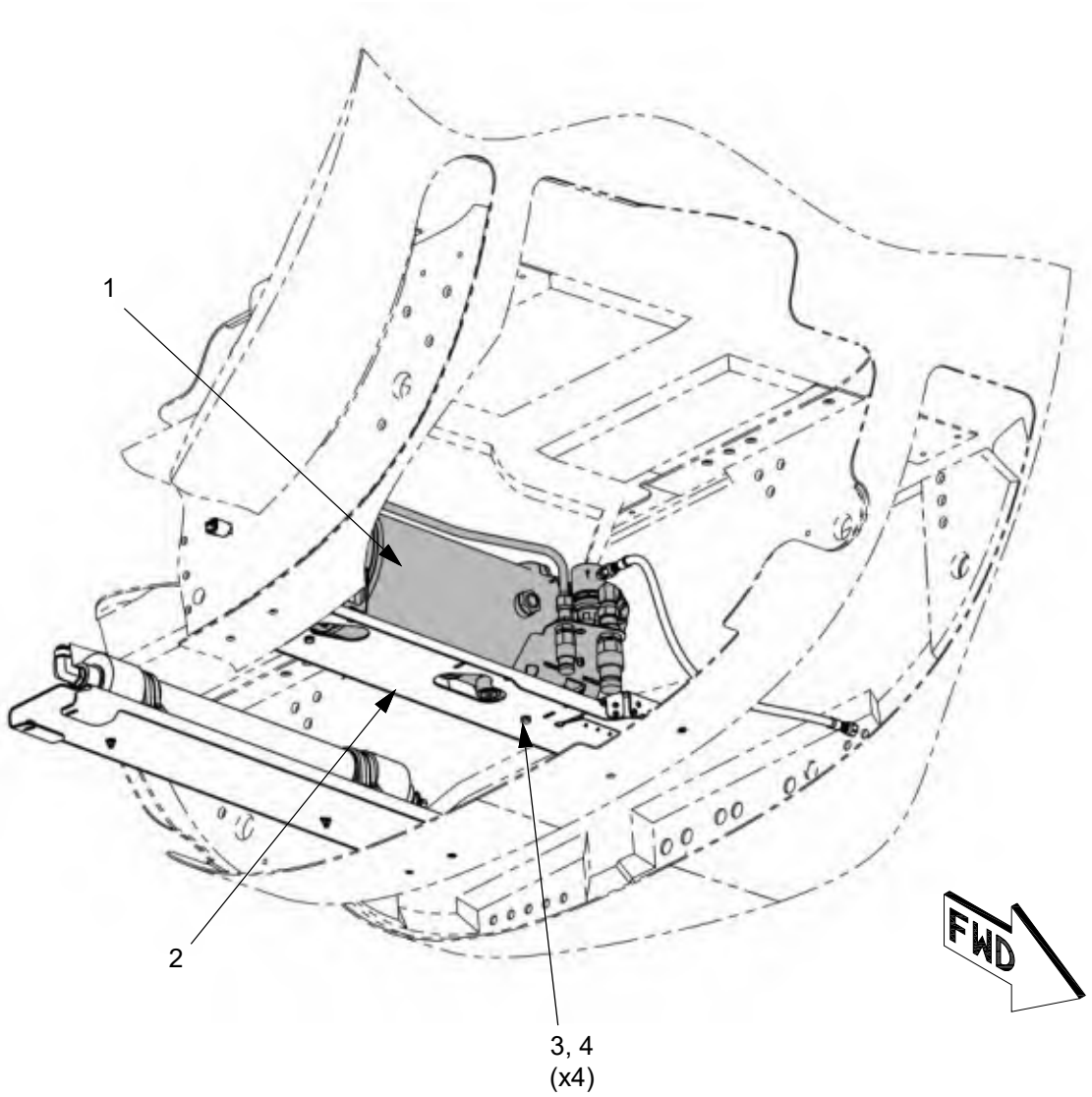

LEGEND

1. Hydraulic Reservoir
2. Mount
3. Bolt
4. Washer

Figure 29-10.3: Hydraulic Reservoir (Sheet 2 of 4)

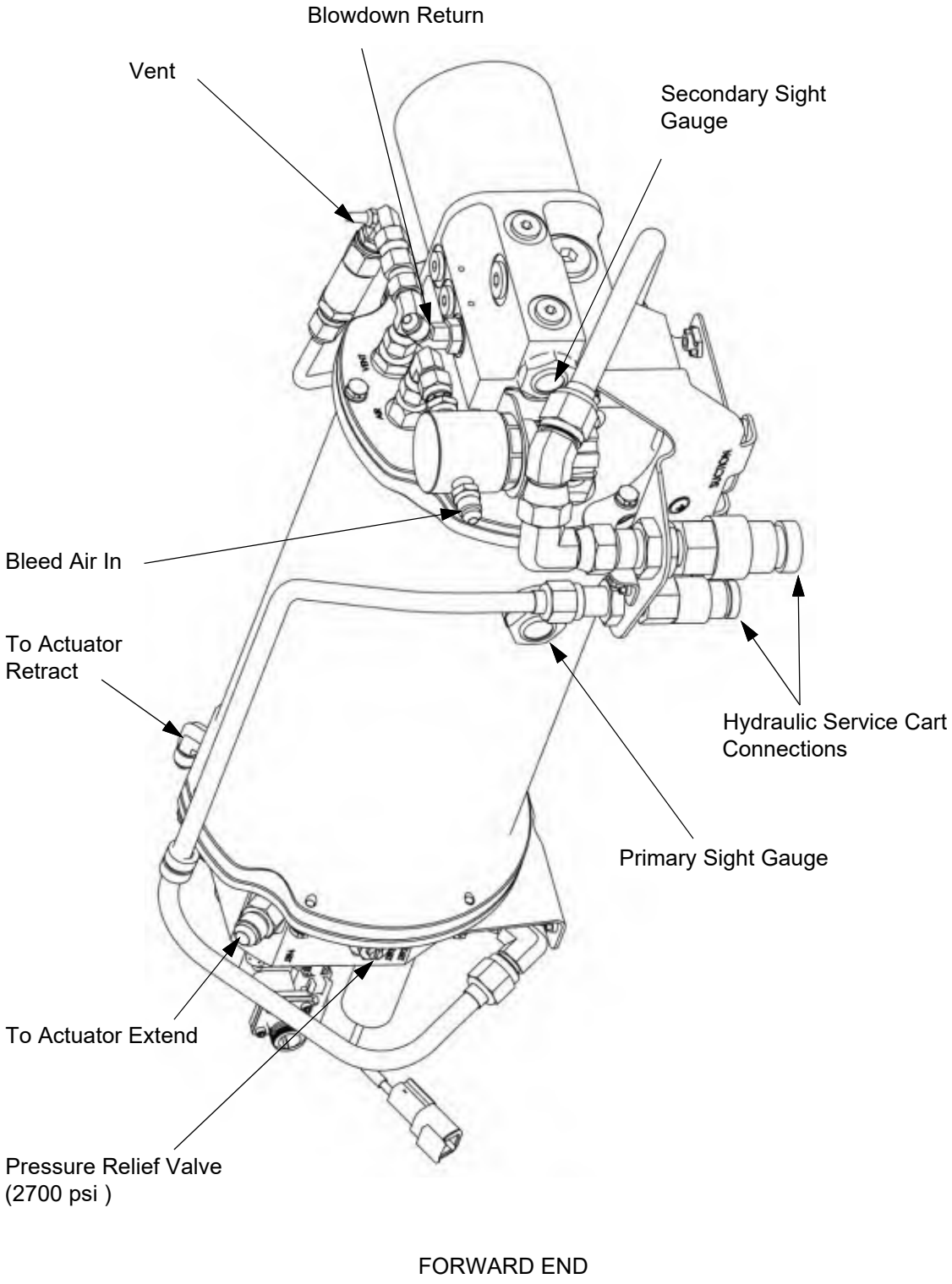

Figure 29-10.3: Hydraulic Reservoir (Sheet 3 of 4)

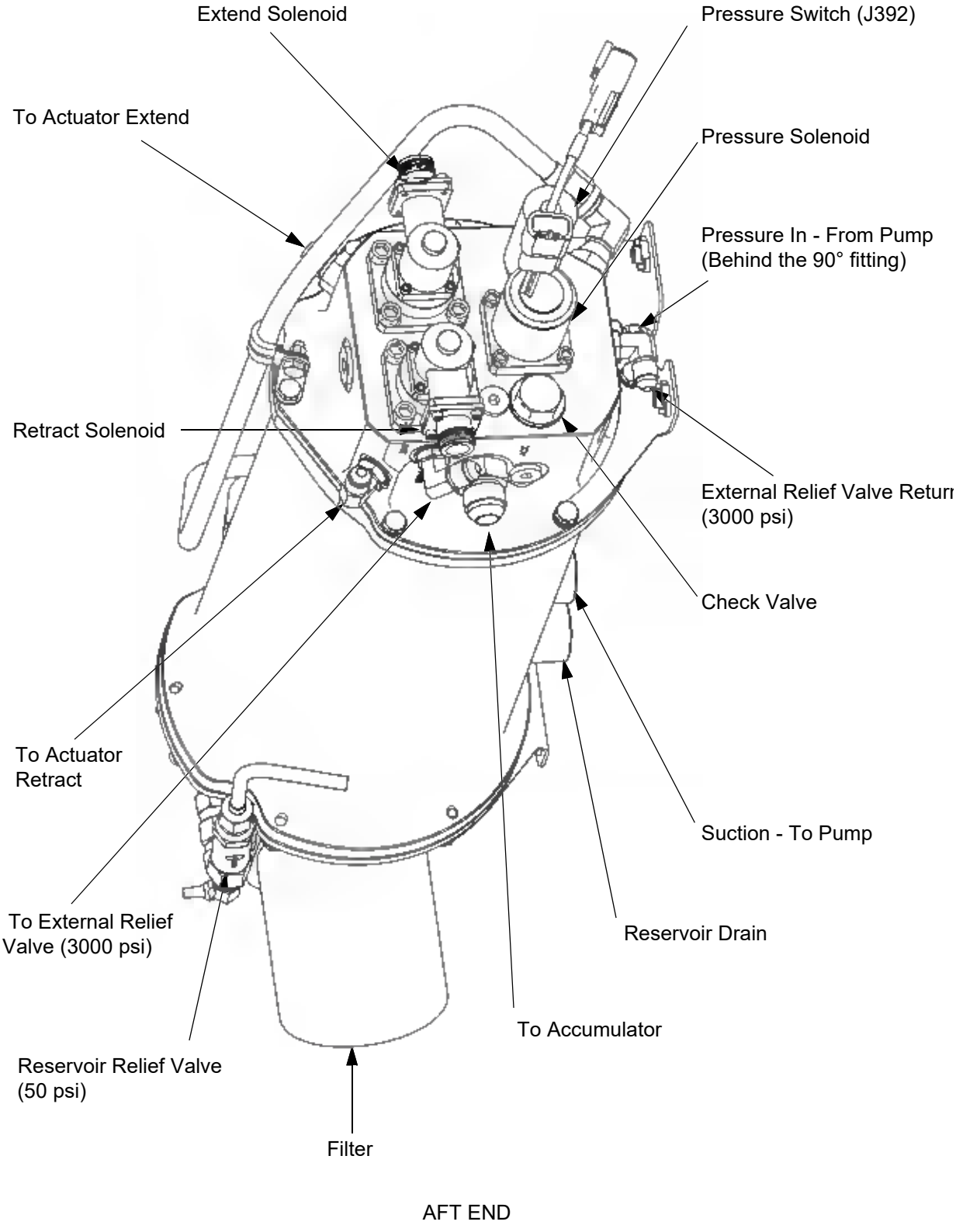

Figure 29-10.3: Hydraulic Reservoir (Sheet 4 of 4)

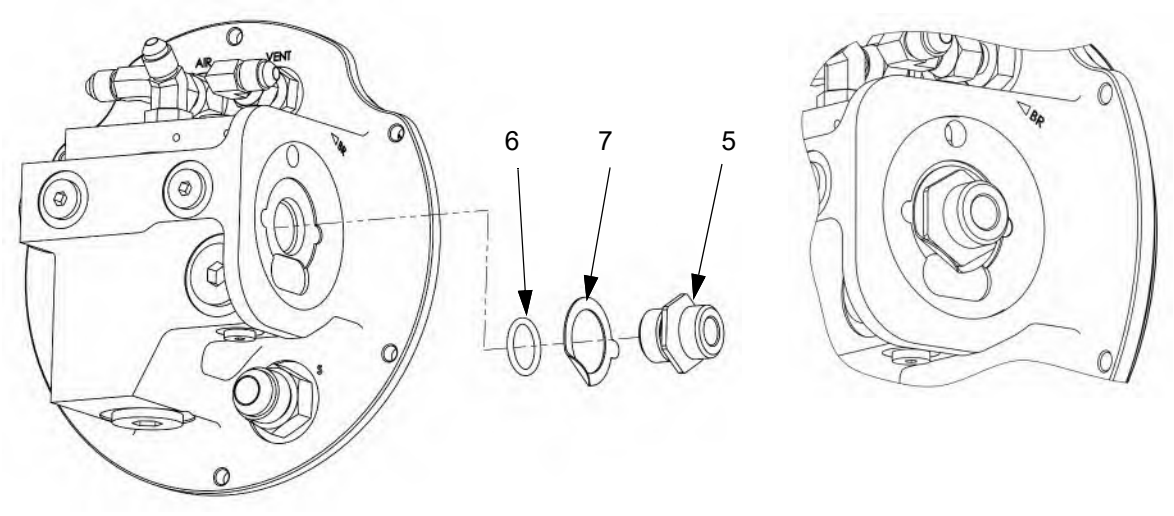

LEGEND

1. Extend Solenoid
2. Retract Solenoid
3. Pressure Solenoid
4. Pressure Switch
5. Adapter
6. O-Ring
7. Locking Washer

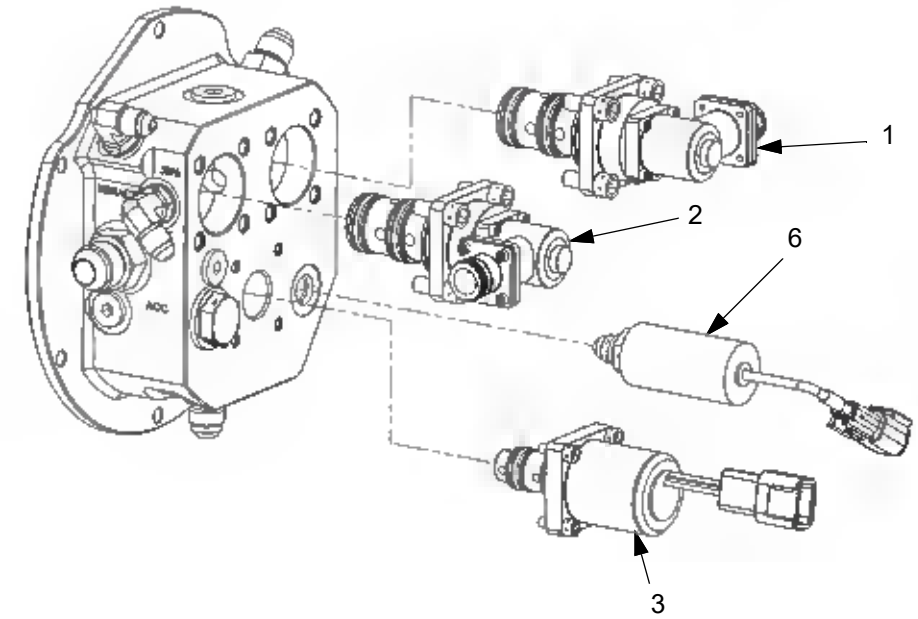

D. Accumulator

(1) Removal

(a) Set the BATT 1 and BATT 2 switches to off.

(b) Disconnect external electrical power from the airplane (refer to Chapter 24-40).

WARNING: The hydraulic lines can contain high pressures after engine shutdown. The sudden release of hydraulic fluid under pressure could cause serious injury or death. The system must be depressurized before it is opened for maintenance.

(c) Make sure the hydraulic system is depressurized (refer to 29-10.2.H).

(d) Remove the airplane belly panels (refer to Chapter 57-10).

(e) Release the nitrogen charge of the accumulator through the servicing valve.

(f) Disconnect the hydraulic line from the accumulator.

(g) Cap and plug open lines and fittings.

(h) Remove the fasteners and clamps that attach the accumulator to the mount.

(i) Remove the accumulator.

(2) Installation

(a) Put the accumulator in position on the mount.

(b) Install the clamps and fasteners that attach the accumulator to the mount.

(c) Connect the hydraulic line from the reservoir to the accumulator.

(d) Charge the accumulator to 1200 ± 50 psi using nitrogen (A-A- 59503).

(e) Service the hydraulic system (refer to Chapter 12-10).

(f) Check the accumulator for leaks.

Figure 29-10.4: Accumulator

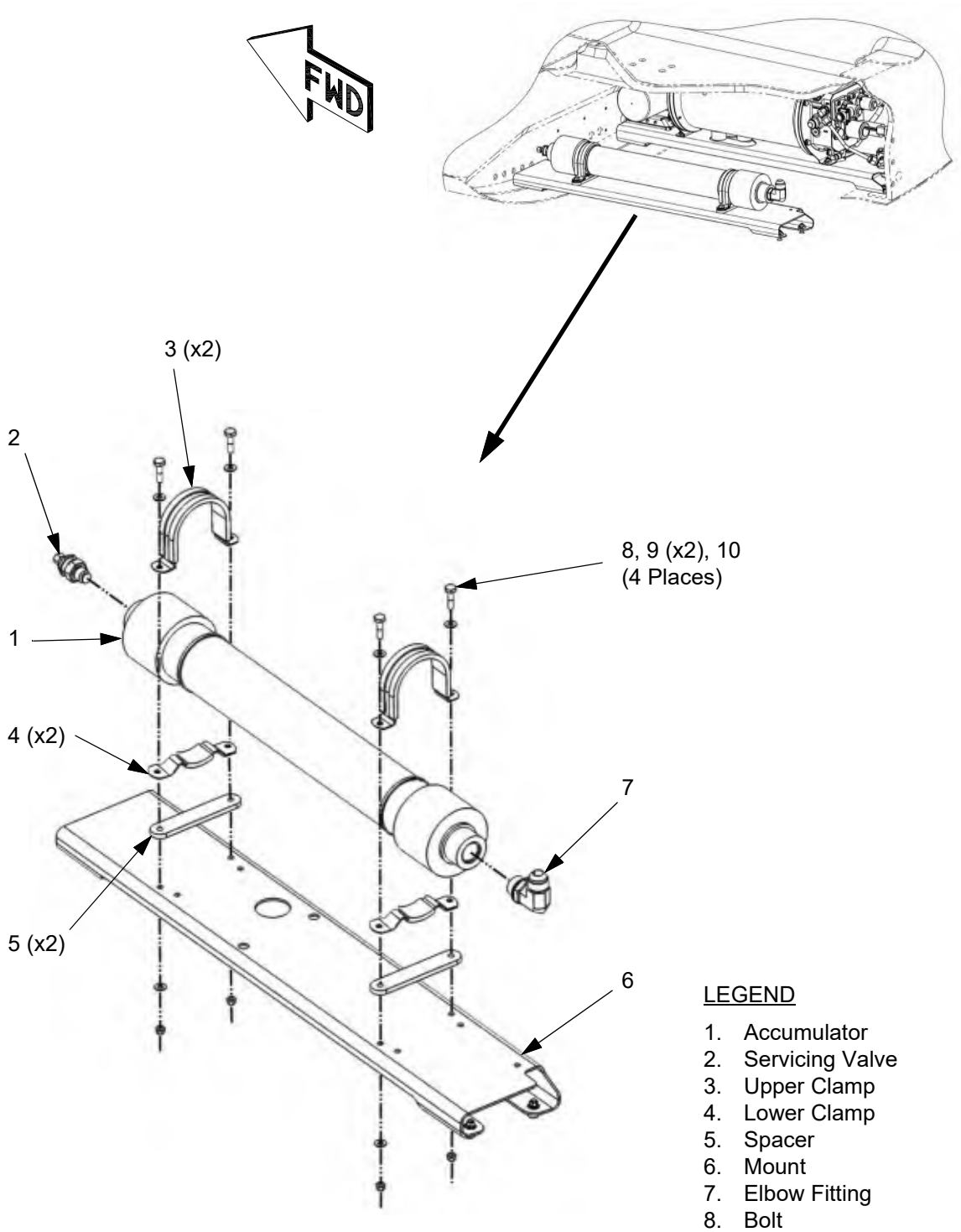

LEGEND

1. Accumulator
2. Servicing Valve
3. Upper Clamp
4. Lower Clamp
5. Spacer
6. Mount
7. Elbow Fitting
8. Bolt
9. Washer
10. Locknut

E. Hydraulic Suppressor
(Piston-Type Pump Only)

The hydraulic suppressor helps quiet the hydraulic system by reducing the hydraulic shock and noise in the system hydraulic fluid. This is done by forcing the system hydraulic fluid through a flow regulating cylinder surrounded by a bladder pressurized using nitrogen.

(1) Removal

(a) Set the BATT 1 and BATT 2 switches to off.

WARNING: The hydraulic lines can contain high pressures after engine shutdown. The sudden release of hydraulic fluid under pressure could cause serious injury or death. The system must be depressurized before it is opened for maintenance.

(b) Make sure the hydraulic system is depressurized (refer to 29-10).

(c) Disconnect external electrical power from the airplane (refer to Chapter 24-40).

(d) Remove the cowling (refer to Chapter 71-10).

(e) Disconnect the hydraulic lines from the suppressor.

(f) Cap and plug all open lines and fittings.

(g) Remove the two bolts and washers attaching each saddle clamp to the suppressor support plate.

(h) Remove the suppressor.

WARNING: The suppressor is pressurized with nitrogen to 150 +0/-50 psi.

(i) Carefully release the internal pressure of the suppressor through the valve on the side.

(j) Remove the fittings from the suppressor if needed.

(2) Installation

(a) If removed, install the fittings into the suppressor.

(b) Attach the suppressor to the mount by with the bolts, washers, nuts, and loop clamps.

(c) Connect the hydraulic lines to the suppressor.

(d) Charge the suppressor with nitrogen (A-A- 59503) to 150 +0/-50 psig at 70°F (21°C) (refer to Chapter 12-10).

(e) Install the cowling (refer to Chapter 71-10).

(f) Do a leak check of the hydraulic suppressor as follows:

(i) Start the engine (refer to Chapter 71-00).

(ii) Operate the engine above 51% N_G for at least 30 seconds.
(iii) Shut down the engine (refer to Chapter 71-00).
(iv) Inspect the hydraulic suppressor and associated lines and fittings for leaks.

Figure 29-10.5: Hydraulic Suppressor

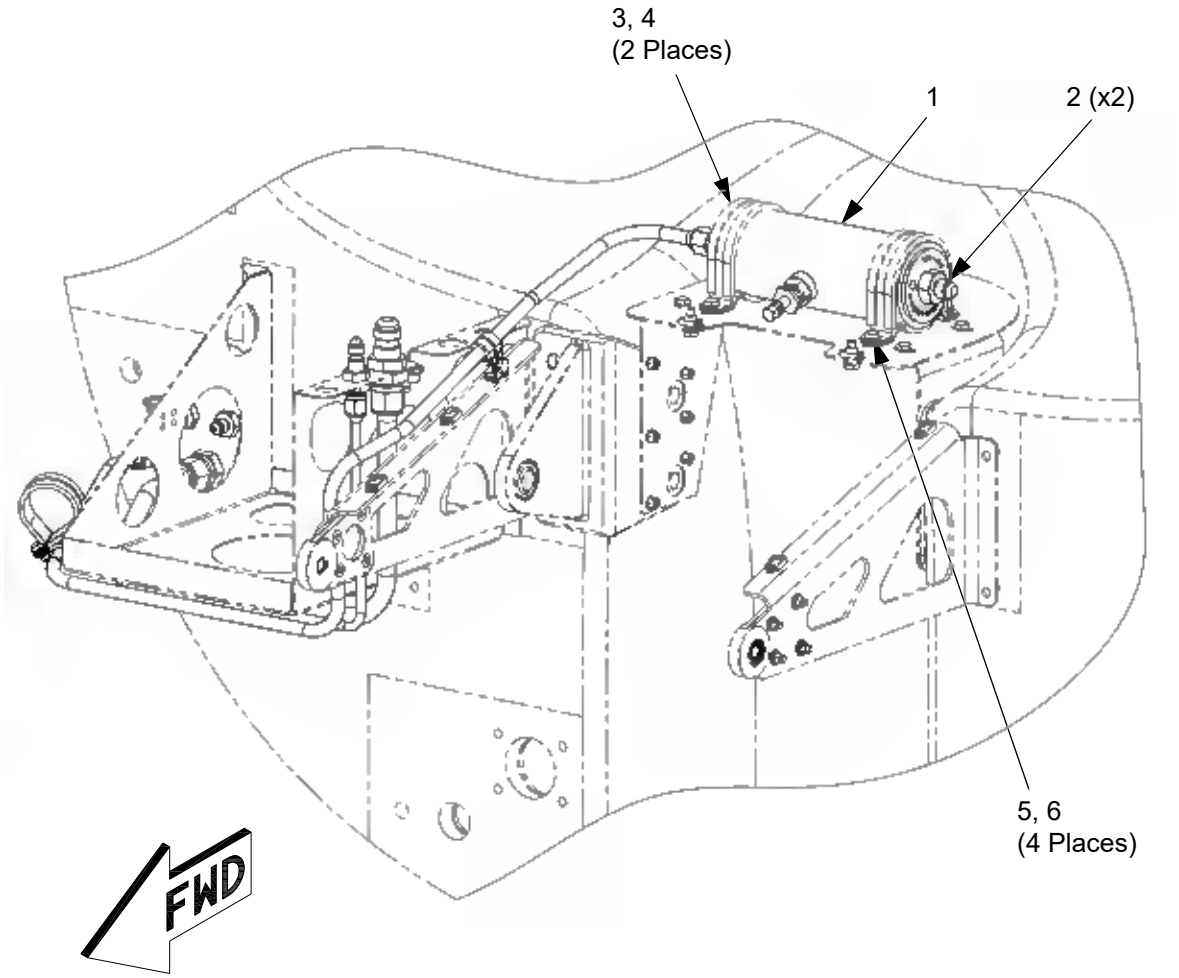

LEGEND

1. Suppressor
2. Fitting
3. Clamp, Upper
4. Clamp, Lower
5. Bolt
6. Washer

F. Hydraulic Inline Filter
(Gear-Type Pump Only)

(1) Removal

(a) Set the BATT 1 and BATT 2 switches to off.

(b) Disconnect external electrical power from the airplane (refer to Chapter 24-40).

(c) Make sure the hydraulic system is depressurized (refer to 29-10.2.H)

(d) Remove the cowling (refer to Chapter 71-10).

(e) Remove intercoolers and plumbing as needed for access (refer to Chapter 21-20).

WARNING: The hydraulic lines can contain high pressures after engine shutdown. The sudden release of hydraulic fluid under pressure could cause serious injury or death. The system must be depressurized before it is opened for maintenance.

(f) Disconnect the hydraulic lines from inline filter.

(g) Cap and plug all open lines and fittings.

(h) Remove the bolts, nuts, and washers that attach the loop clamps to the bracket.

(i) Remove the inline filter from the bracket.

(j) Remove the loop clamps from the inline filter.

(2) Installation

CAUTION: Make sure the filter is orientated with the flow arrow in the direction of flow (arrow towards the copilot's side).

(a) Attach the filter to the bracket by with the bolts, washers, nuts, and loop clamps.

(b) Connect the hydraulic lines to the filter.

(c) Install intercoolers and plumbing as needed (refer to Chapter 21-20).

(d) Install the cowling (refer to Chapter 71-10).

(e) Do a leak check of the hydraulic inline filter as follows:

(i) Start the engine (refer to Chapter 71-00).

(ii) Operate the engine above 51% N_G for at least 30 seconds.

(iii) Shut down the engine (refer to Chapter 71-00).

(iv) Inspect the hydraulic inline filter and associated lines and fittings for leaks.

(3) Servicing

(a) Disassembly

(i) Remove the inline filter from the airplane, refer to step (1).

(ii) Secure the wrench flats of the filter housing case in a smooth jaw vise. Use caution not to damage the wrench flats.

CAUTION: The filter element is installed in the housing plug. Use caution to not damage the filter element when removing the housing plug from the housing case.

(iii) Using a suitable wrench, remove the filter housing plug from the housing case.

(iv) Remove the filter element from the housing plug.

Note: Damage of any kind to the element will require replacement of the element.

(v) Remove and discard the plug and element o-rings.

(b) Filter Cleaning

(i) Remove rough external dirt in a separate container with cleaning fluid.

Note: Acceptable cleaning fluids are, but not limited to, acetone or mineral spirits.

(ii) Soak the filter for thirty minutes in unsoiled, high-quality cleaning fluid.

(iii) Following the soak, blow through the element (150 psi max.) from inside to outside with clean compressed air or similar clean gas.

(iv) Remove any remaining water particles by dipping the filter in isopropyl alcohol.

(v) Inspect element for uniform pleats. If there is any visible damage, the filter element requires replacement.

(c) Housing Cleaning

(i) Clean the housing case and plug using an acceptable cleaning fluid and a fine bristle brush:

Note: Acceptable cleaning fluids are, but not limited to, acetone or mineral spirits.

(1) Move the brush in a counterclockwise direction from the seal area to the end of the thread run.

(2) Repeat until all lubricants, fluids, and debris in the thread and seal area surfaces are removed.

(3) Blow off any debris with a clean air source.

(ii) Inspect all threads and seal lands for damage and condition.

(1) The threads should be smooth with no denting or galling.

(2) The seal lands should have no scratches or dents.

(3) If there is any physical damage to either area the housing case or plug must be replaced.

(iii) Make sure the flow arrow marking and heat numbers on the housing case are present. Replace the housing if missing.

(d) Assembly

(i) Install new o-rings of the filter element and housing plug.

(ii) Lubricate the o-rings with petroleum jelly.

(iii) Install the filter element in the housing plug.

(iv) Lubricate the housing plug threads with petroleum jelly.

(v) Secure the wrench flats of the filter housing case in a smooth jaw vise. Use caution not to damage the wrench flats.

(vi) Begin threading the filter/plug assembly into the case by hand until finger tight.

(vii) Torque the housing plug to 35 ft.lbs.

(viii) Install the inline filter in the airplane, refer to step (2).

Figure 29-10.6: Hydraulic Inline Filter (Gear Pump)

LEGEND

1. Hydraulic Inline Filter
2. Clamp
3. Bracket
4. Bolt
5. Washer
6. Nut
7. Pressure Line

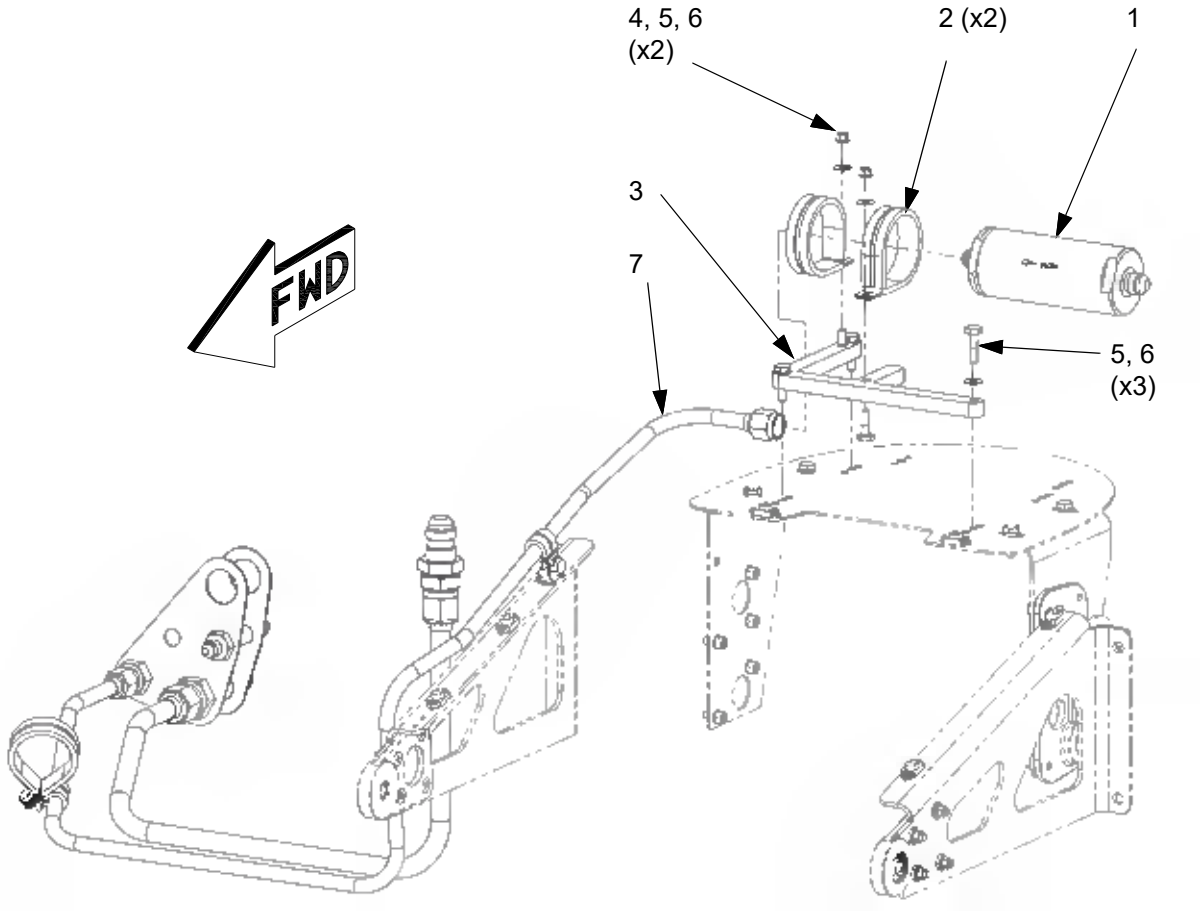

G. Hydraulic Lines Forward of the Firewall

(1) Removal

(a) Set the BATT 1 and BATT 2 switches to off.

(b) Disconnect external electrical power from the airplane (refer to Chapter 24-40).

WARNING: The hydraulic lines can contain high pressures after engine shutdown. The sudden release of hydraulic fluid under pressure could cause serious injury or death. The system must be depressurized before it is opened for maintenance.

(c) Make sure the hydraulic system is depressurized (refer to 29-10.2.H).

(d) Remove the cowling (refer to Chapter 71-10), as necessary.

(e) Remove all clamps that secure the hydraulic line.

(f) Remove the hydraulic line.

(g) Cap and plug all open lines and fittings.

(2) Installation

Note: Lubricate all O-rings using hydraulic fluid (Mil-PRF-83282 or Mil-PRF-87257).

(a) Install the hydraulic line.

(b) Install all clamps that secure the hydraulic line.

(c) Service the hydraulic system as needed (refer to Chapter 12-10).

(d) If replacing nose landing gear actuator or uplock hydraulic lines, leak check as follows:

(i) Do the landing gear operational check (refer to Chapter 32-30).

(ii) Inspect the hydraulic lines and fittings for leaks.

(e) If replacing hydraulic lines between the pump and reservoir, leak check as follows:

(i) Start the engine (refer to Chapter 71-00).

(ii) Operate the engine above 51% N_G for at least 30 seconds.

(iii) Shut down the engine (refer to Chapter 71-00).

(iv) Inspect the hydraulic lines and fittings for leaks.

(f) Install the cowling (refer to Chapter 71-10), as necessary.

Figure 29-10.7: Hydraulic Lines Firewall Forward (Sheet 1 of 6)

LEGEND

1. Suction Line
2. Case Drain Line
   (Piston Pump Only)
3. Pneumatic Line
   (Hydraulic Reservoir/Door Seal)

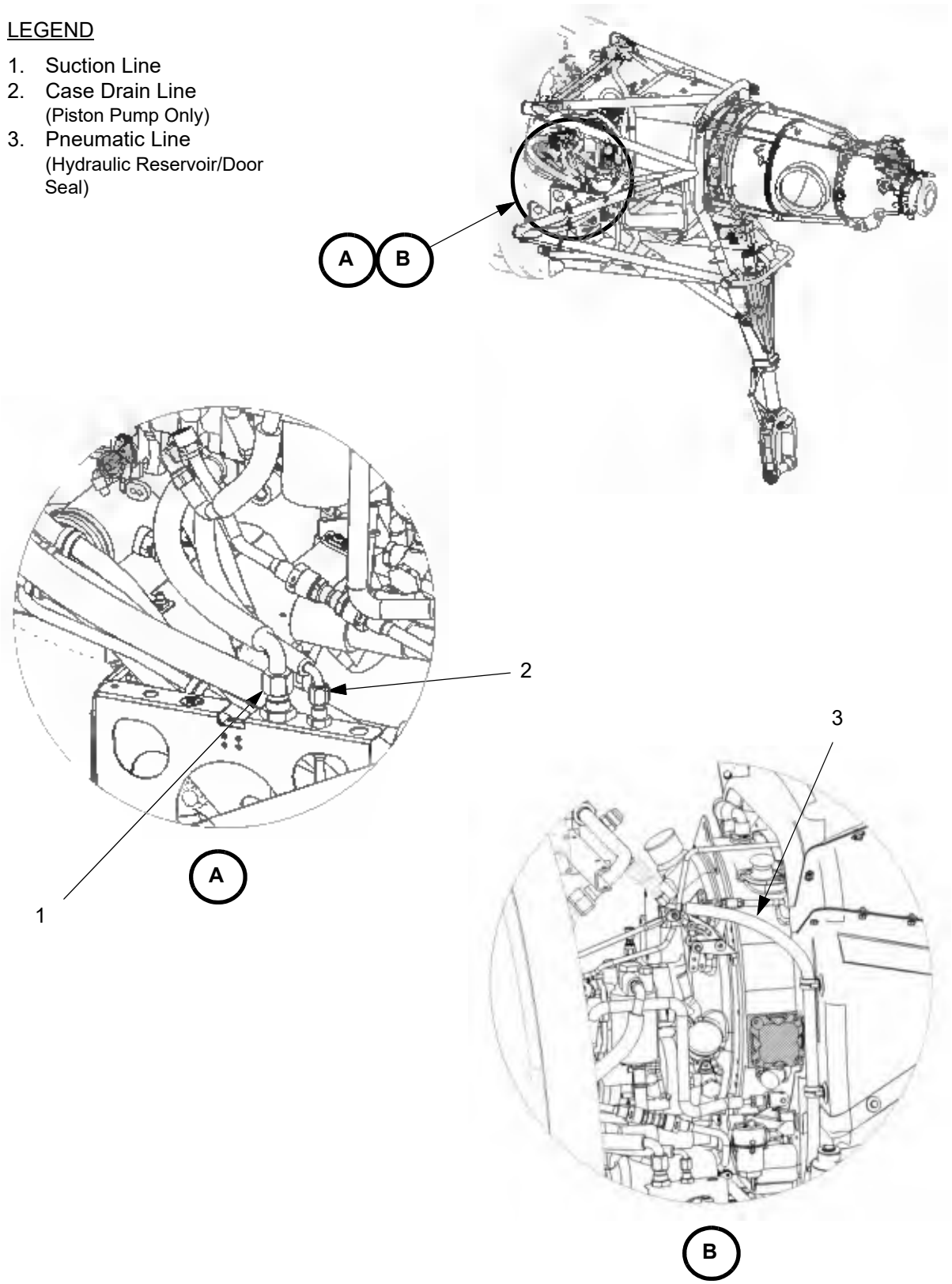

Figure 29-10.7: Hydraulic Lines Firewall Forward (Sheet 2 of 6)

LEGEND

1. Pressure Line
2. Suction Line
3. Case Drain Line
   (Piston Pump Only)
4. Pneumatic Line
   (Hydraulic Reservoir/Door Seal)
5. Clamp
6. Bolt
7. Washer
8. Nut

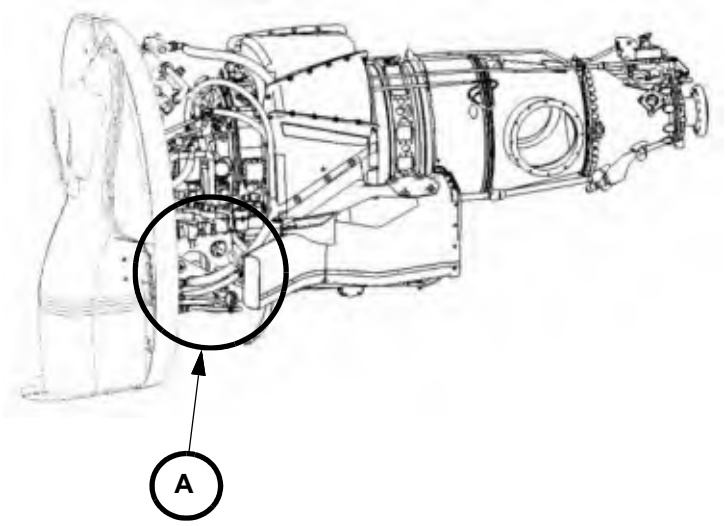

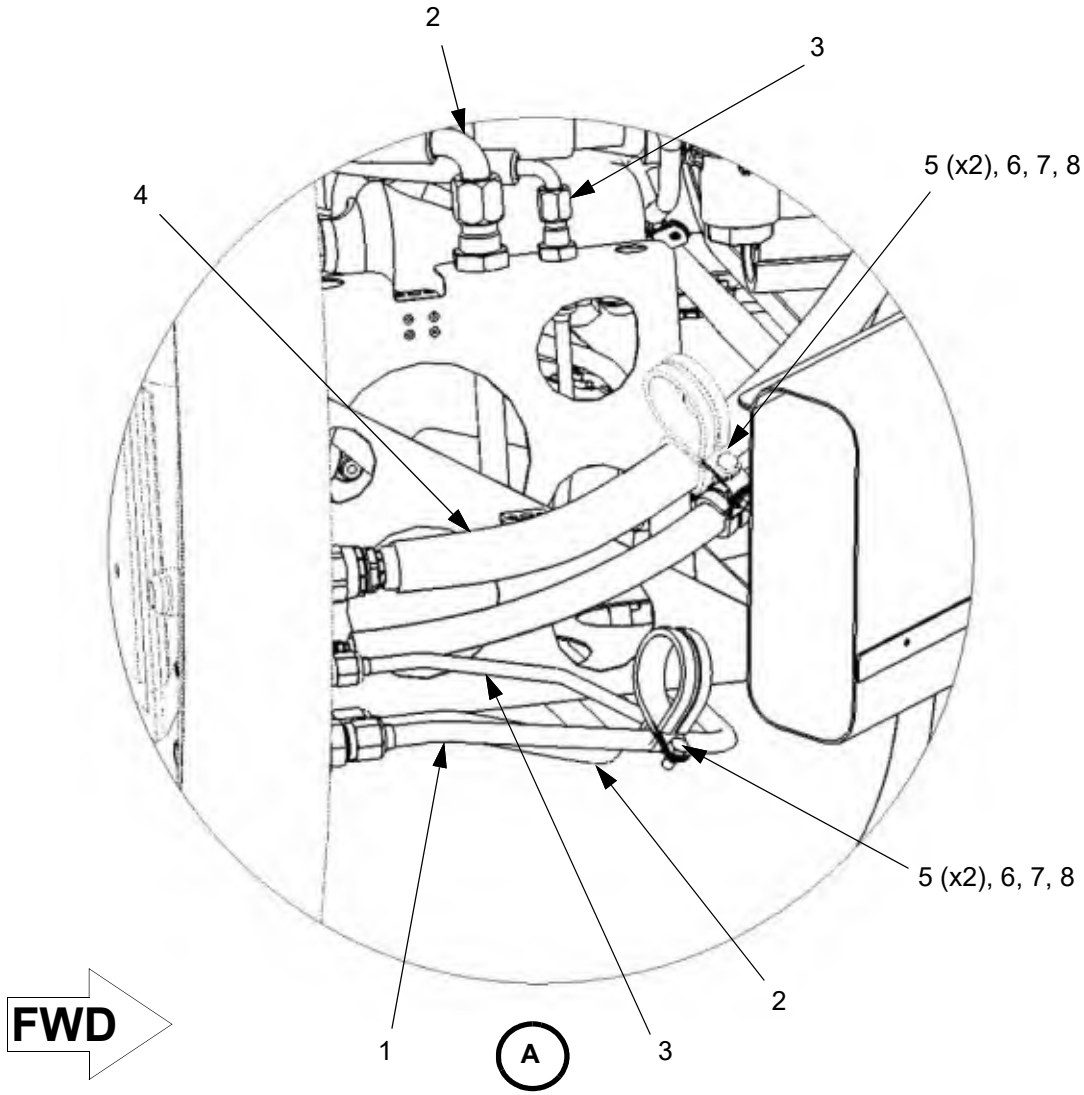

Figure 29-10.7: Hydraulic Lines Firewall Forward (Sheet 3 of 6)

LEGEND

1. Hydraulic Pump (Piston Pump)
2. Pressure Line
3. Suction Line
4. Case Drain Line
   (Piston-Type Pump Only)
5. Overboard Drain

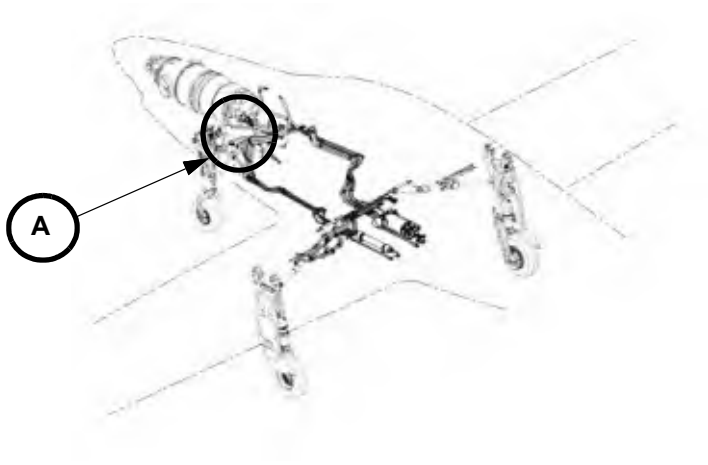

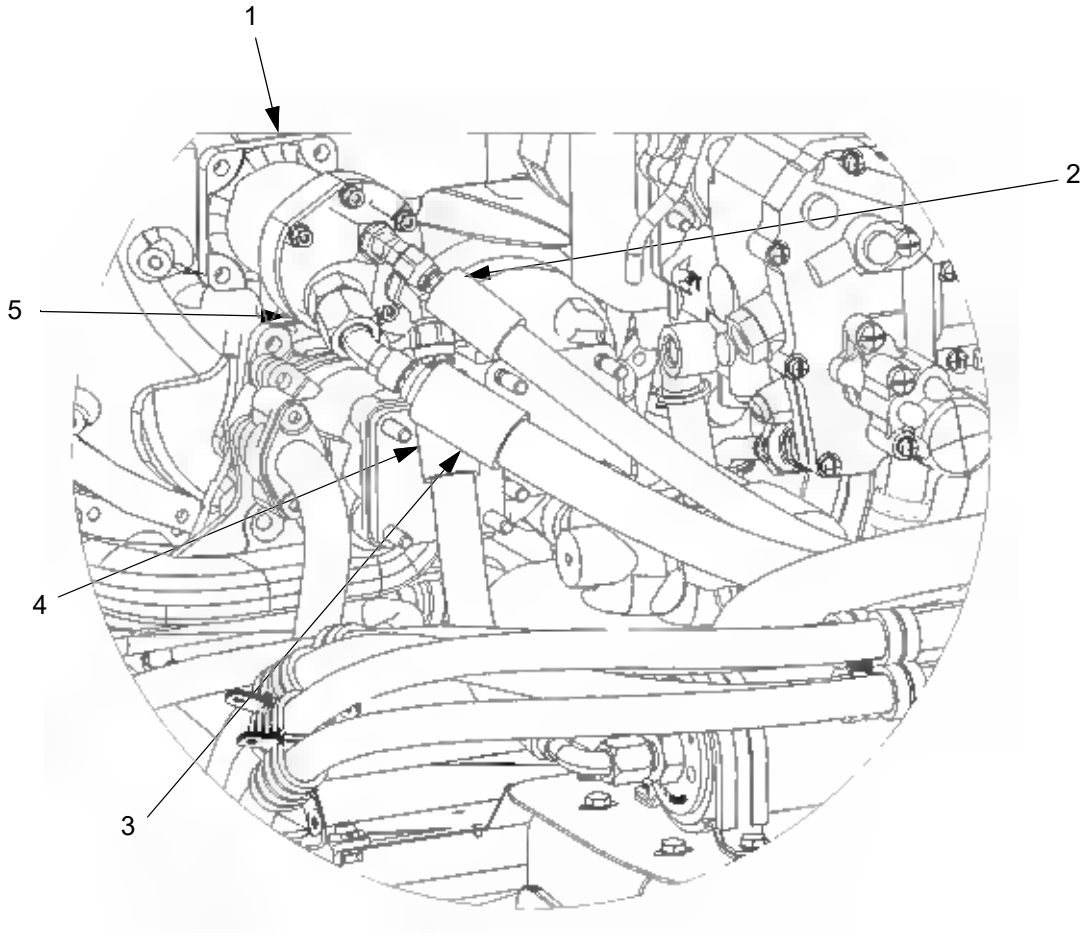

A
(Piston-Type Pump)

Figure 29-10.7: Hydraulic Lines Firewall Forward (Sheet 4 of 6)

LEGEND

1. Hydraulic Pump (Gear-Type Pump)
2. Pressure Line
3. Suction Line
4. Overboard Drain (Not Shown)
5. Inline Filter
6. Pressure Line (Hard Line)

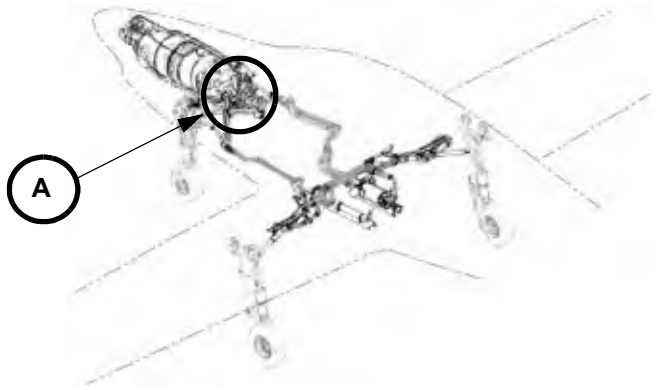

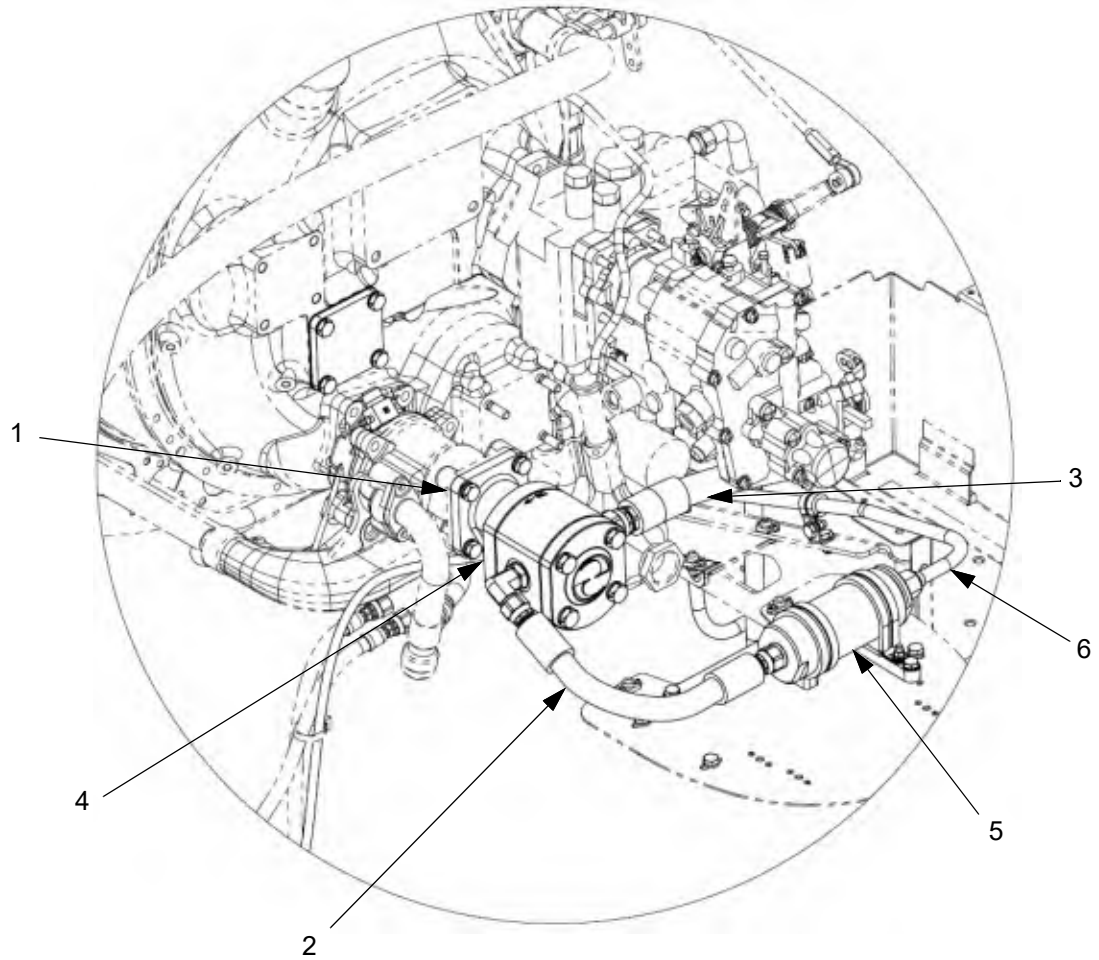

(Gear-Type Pump)

Figure 29-10.7: Hydraulic Lines Firewall Forward (Sheet 5 of 6)

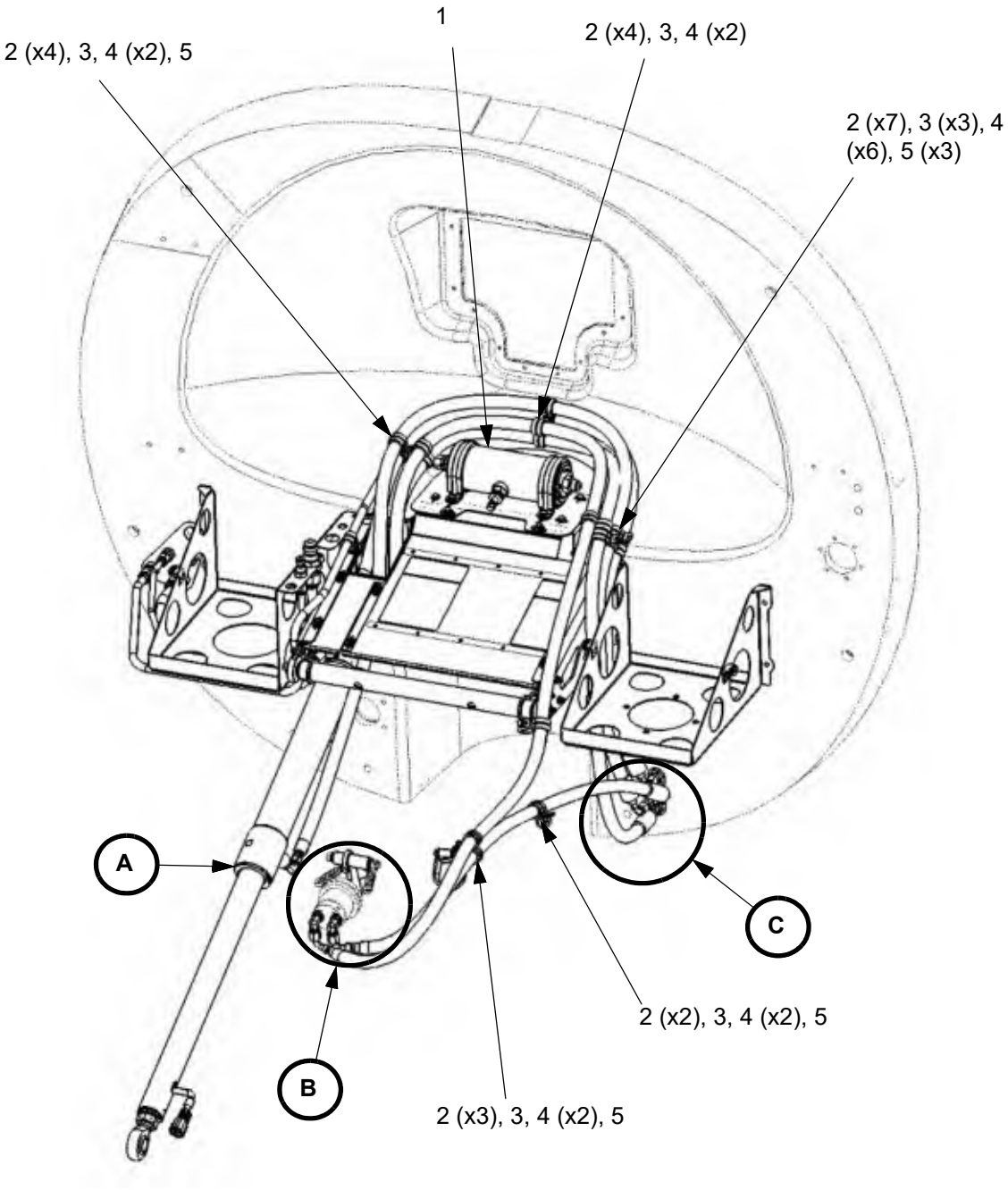

LEGEND

1. Filter or Suppressor
2. Clamp
3. Bolt
4. Washer
5. Nut

Figure 29-10.7: Hydraulic Lines Firewall Forward (Sheet 6 of 6)

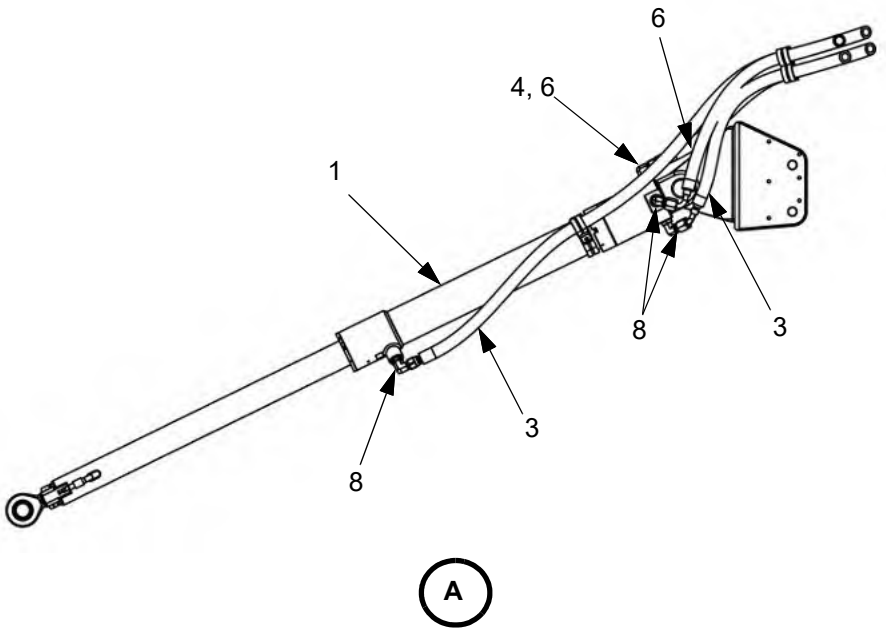

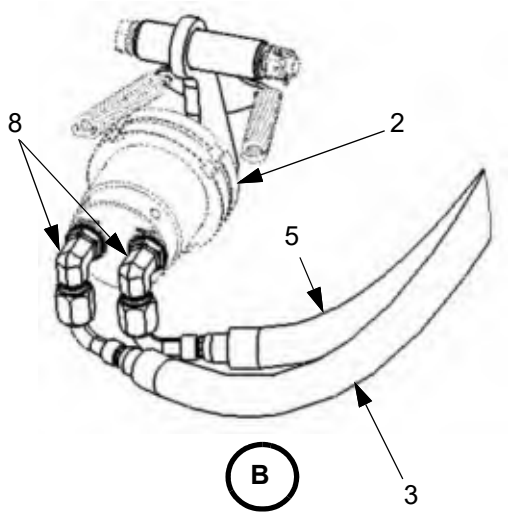

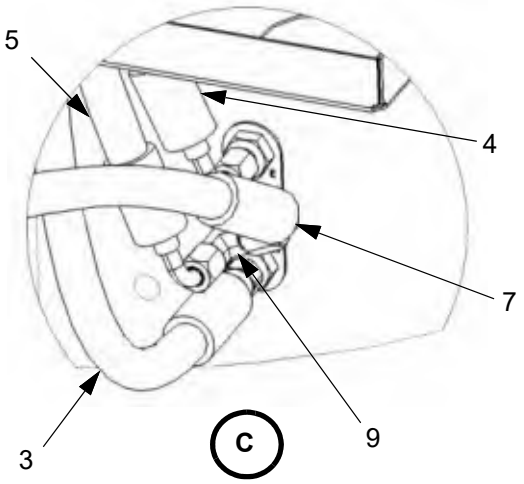

LEGEND

1. Nose Landing Gear Actuator
2. Uplock Actuator
3. Extend Line
4. Emergency Extend Line
5. Retract Line
6. Uplock - Extend Side Line
7. Uplock - Retract Side Line
8. Elbow Fitting
9. Tee Fitting

H. Hydraulic Lines Aft of the Firewall

(1) Removal

(a) Set the BATT 1 and BATT 2 switches to off.

(b) Disconnect external electrical power from the airplane (refer to Chapter 24-40).

WARNING: The hydraulic lines can contain high pressures after engine shutdown. The sudden release of hydraulic fluid under pressure could cause serious injury or death. The system must be depressurized before it is opened for maintenance.

(c) Make sure the hydraulic system is depressurized (refer to 29-10.2.H).

(d) Remove the crew carpet and flooring. Refer to Chapter 25-10 and 53-20

(e) Remove all clamps securing the hydraulic line.

(f) Remove the hydraulic line.

(g) Cap and plug all open lines and fittings.

(2) Installation

Note: Lubricate all o-rings using hydraulic fluid (Mil-PRF-83282 or Mil-PRF-87257).

(a) Install the hydraulic line.

(b) Install all clamps that secure hydraulic line.

(c) Service the hydraulic system as needed (refer to Chapter 12-10).

(d) If replacing landing gear actuator or uplock hydraulic lines, leak check as follows:

(i) Do the landing gear operational check (refer to Chapter 32-30).

(ii) Inspect the hydraulic lines and fittings for leaks.

(e) If replacing hydraulic lines between the pump and reservoir, leak check as follows:

(i) Start the engine (refer to Chapter 71-00).

(ii) Operate the engine above 51% N_G for at least 30 seconds.

(iii) Shut down the engine (refer to Chapter 71-00).

(iv) Inspect the hydraulic lines and fittings for leaks.

(f) Install the flooring and carpet. Refer to Chapter 25-10 and 53-20.

Figure 29-10.8: Hydraulic Lines Aft of the Firewall (Sheet 1 of 3)

LEGEND

1. Tube, Suction
2. Tube, Pressure
3. Tube, Case Drain
4. Tube, Bleed Air
5. Tube, Blowdown
6. Tube, Retract
7. Tube, Extend
8. Elbow Fitting
9. Union Fitting
10. Clamp
11. Bolt
12. Washer
13. Nut

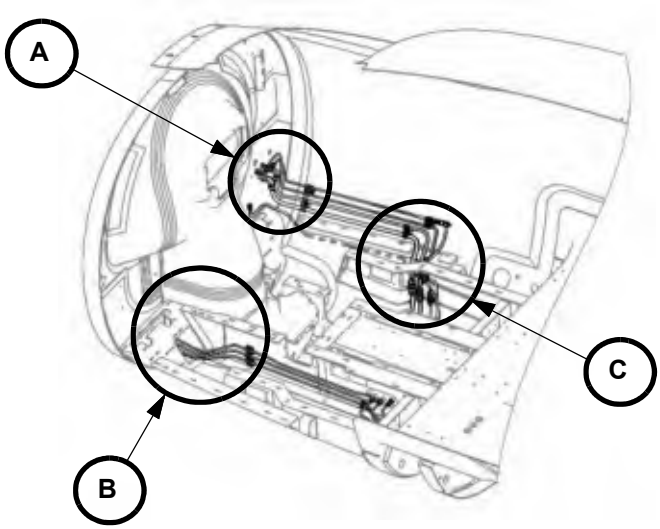

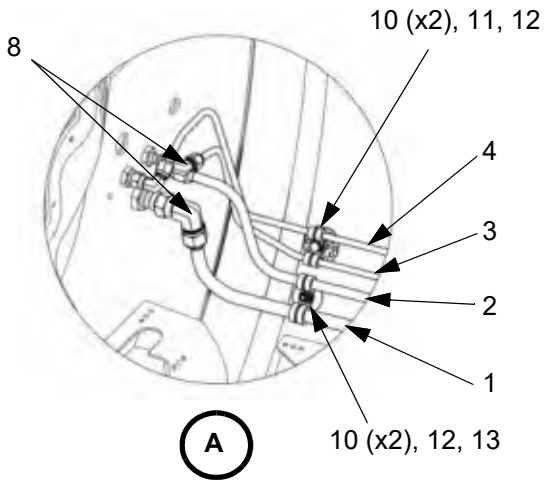

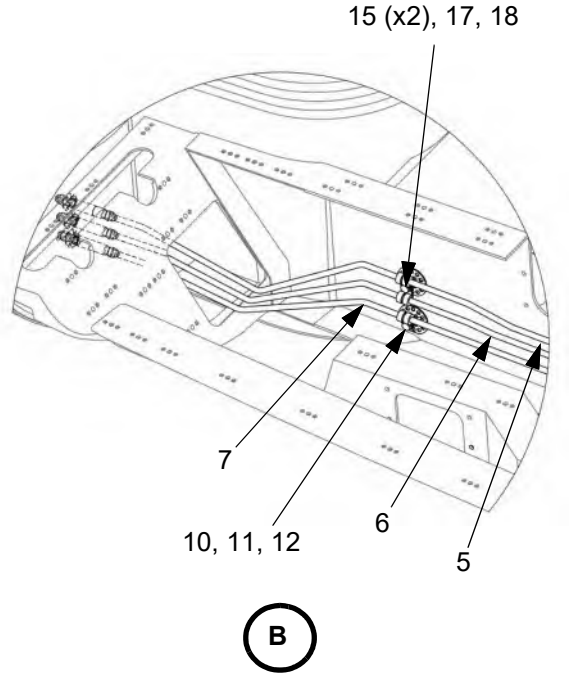

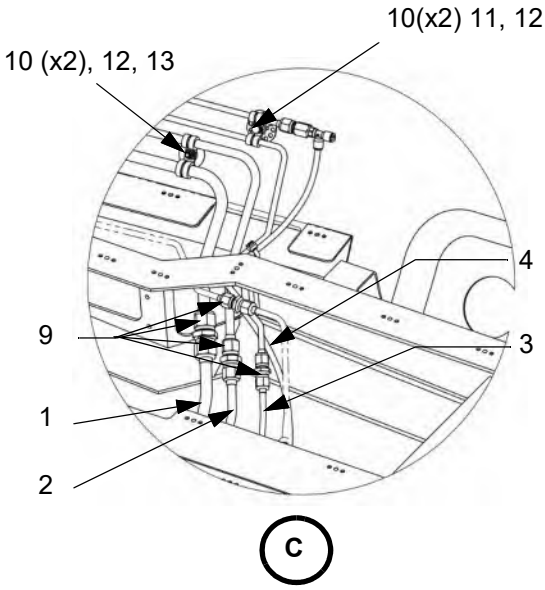

Figure 29-10.8: Hydraulic Lines Aft of the Firewall (Sheet 2 of 3)

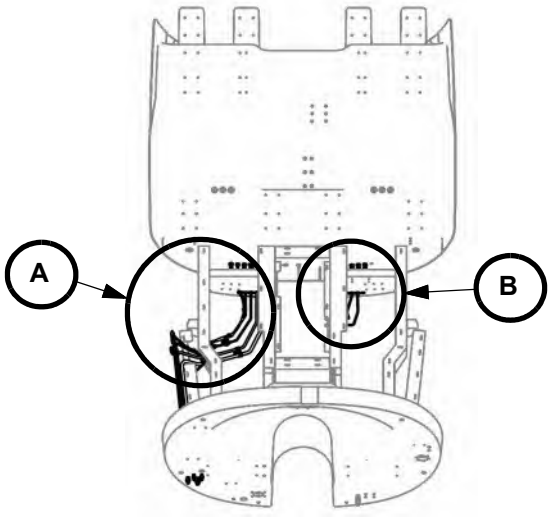

LEGEND

1. Tube, Suction
2. Tube, Pressure
3. Tube, Case Drain
4. Tube, Bleed Air
5. Tube, Blowdown
6. Tube, Retract
7. Tube, Extend
8. Tube, Return
9. Union Fitting
10. Bulkhead Fitting
11. Bulkhead Jam Nut
12. Clamp
13. Bolt
14. Washer
15. Nut

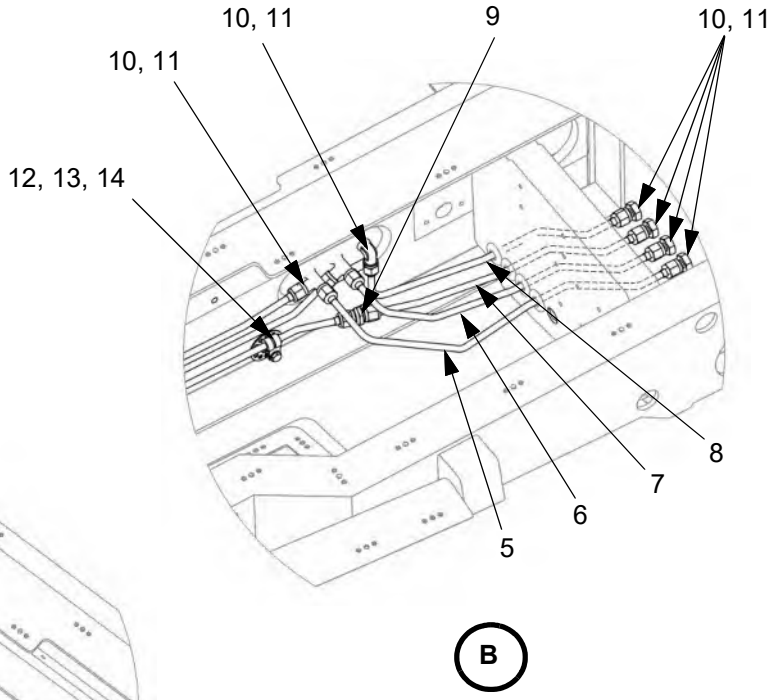

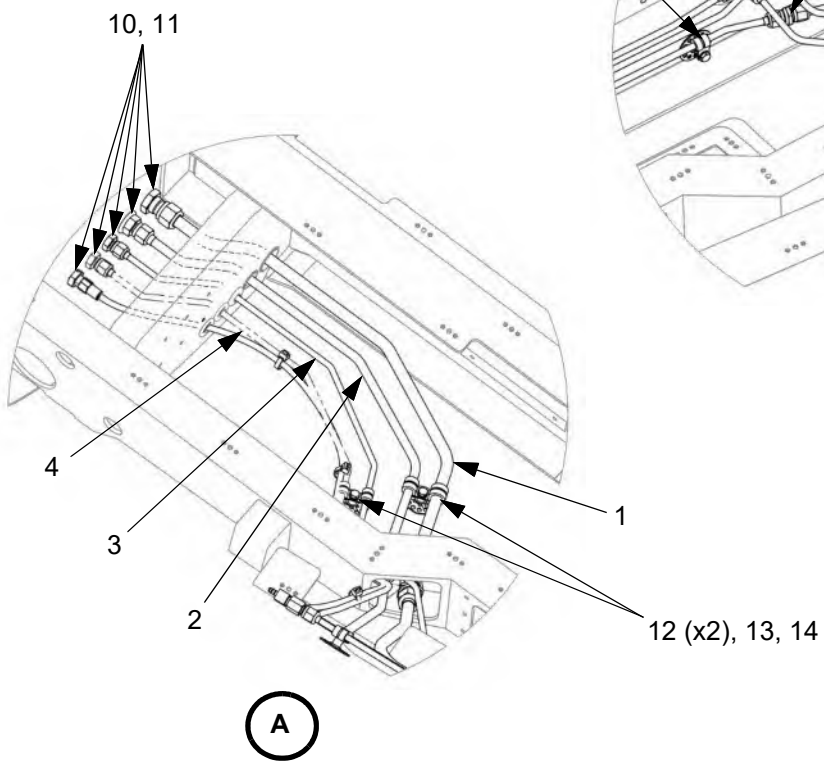

Figure 29-10.8: Hydraulic Lines Aft of the Firewall (Sheet 3 of 3)

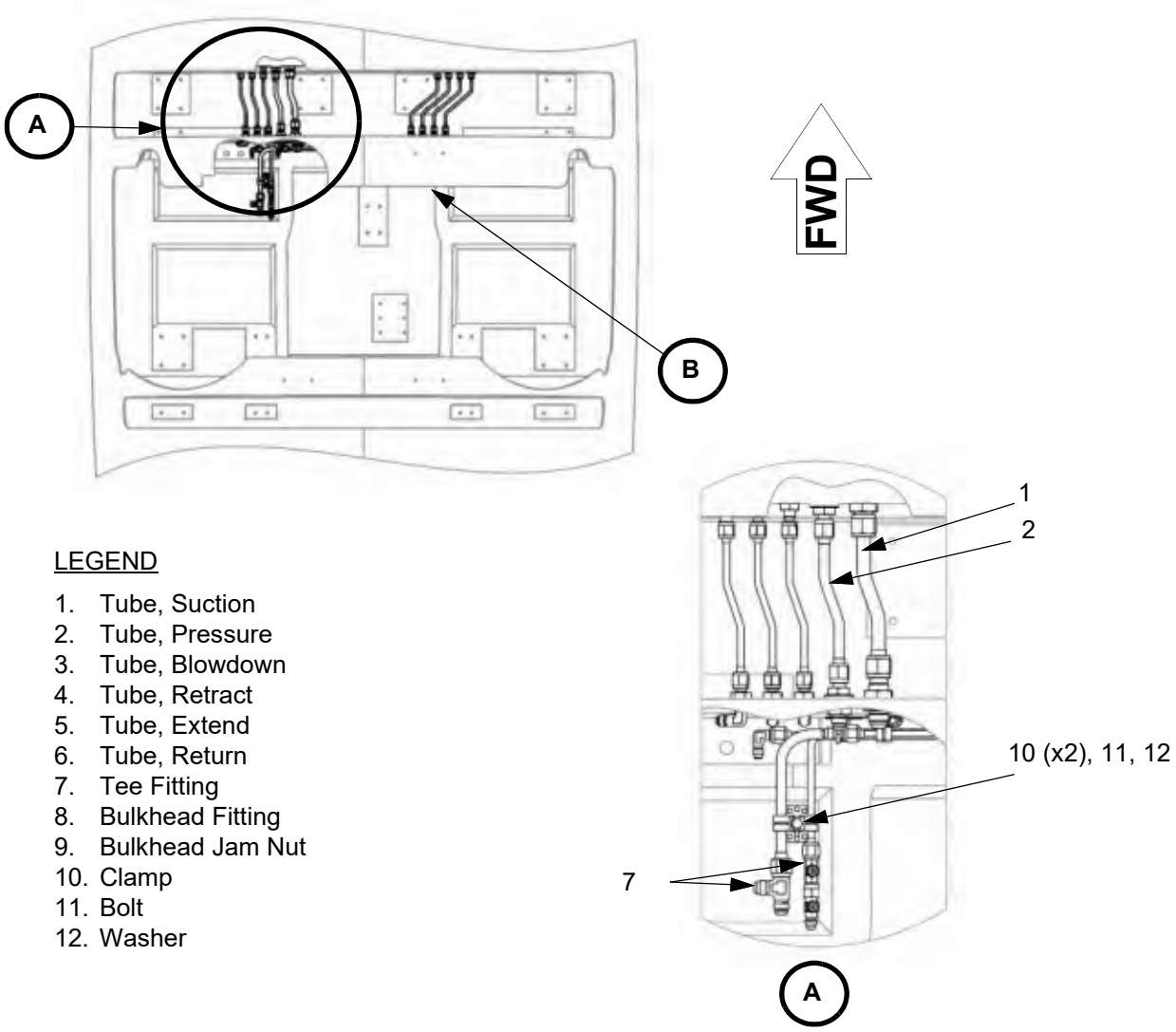

LEGEND

1. Tube, Suction
2. Tube, Pressure
3. Tube, Blowdown
4. Tube, Retract
5. Tube, Extend
6. Tube, Return
7. Tee Fitting
8. Bulkhead Fitting
9. Bulkhead Jam Nut
10. Clamp
11. Bolt
12. Washer

I. Hydraulic Lines in the Wing Saddle

(1) Removal

(a) Set the BATT 1 and BATT 2 switches to off.

(b) Disconnect external electrical power from the airplane (refer to Chapter 24-40).

(c) Remove the airplane belly panels (refer to Chapter 57-10).

WARNING: The hydraulic lines can contain high pressures after engine shutdown. The sudden release of hydraulic fluid under pressure could cause serious injury or death. The system must be depressurized before it is opened for maintenance.

(d) Make sure the hydraulic system is depressurized (refer to 29-10.2.H).

(e) Remove all clamps securing the hydraulic line.

(f) Remove the hydraulic line.

(g) Cap and plug all open lines and fittings.

(2) Installation

Note: Lubricate all O-rings using hydraulic fluid (Mil-PRF-83282 or Mil-PRF-87257).

(a) Install the hydraulic line.

(b) Install all clamps that secure hydraulic line.

(c) Service the hydraulic system as needed (refer to Chapter 12-10).

(d) Do the landing gear operational check (refer to Chapter 32-30).

(e) Inspect the hydraulic lines and fittings for leaks.

(f) If replacing lines between the pump and reservoir, leak check as follows:

(i) Start the engine (refer to Chapter 71-00).

(ii) Operate the engine above 51% N_G for at least 30 seconds.

(iii) Shut down the engine (refer to Chapter 71-00).

(iv) Inspect the hydraulic lines and fittings for leaks.

Figure 29-10.9: Hydraulic Lines in the Wing Saddle (Sheet 1 of 4)

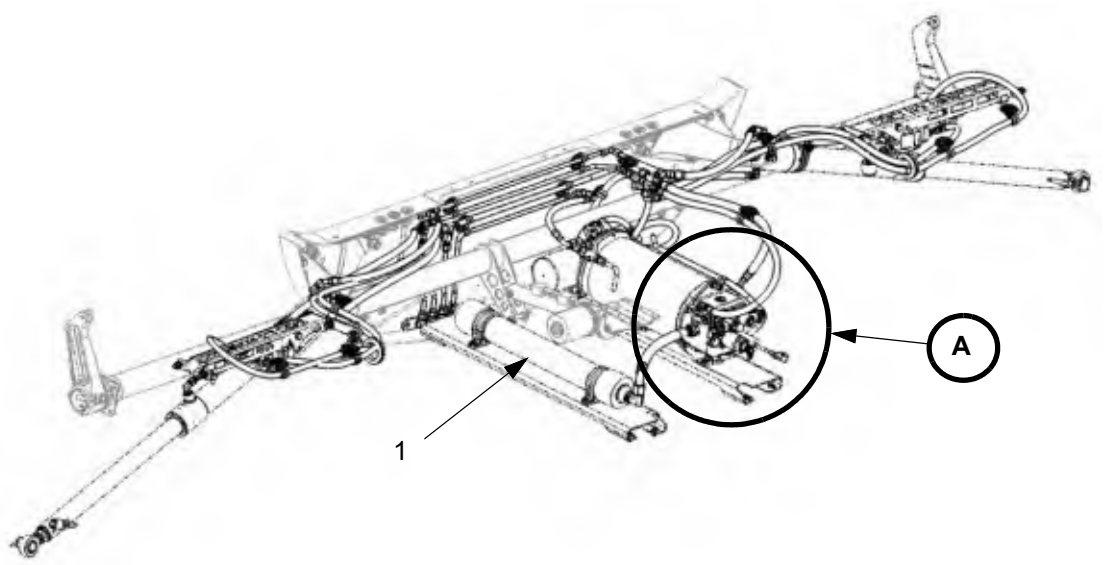

LEGEND

1. Accumulator
2. Accumulator to Reservoir Line
3. Extend Line
4. Retract Line
5. 3000 PSI Pressure Relief Valve
6. Pressure Relief to Manifold Line

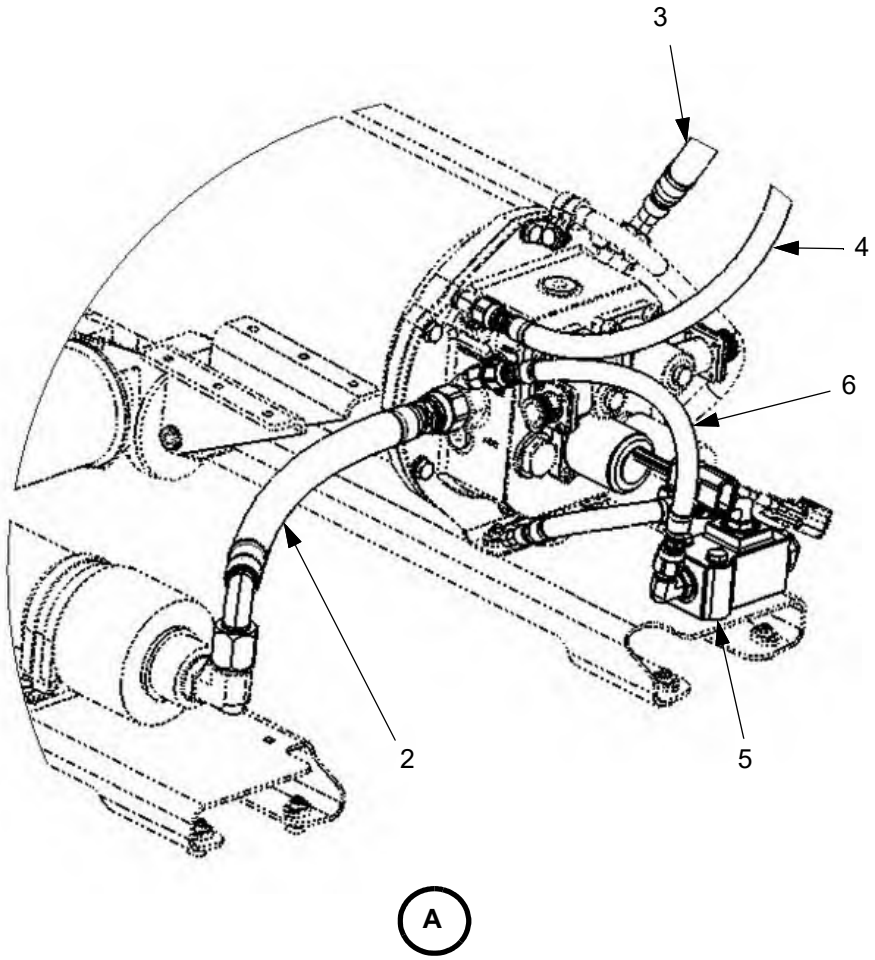

Figure 29-10.9: Hydraulic Lines in the Wing Saddle (Sheet 2 of 4)

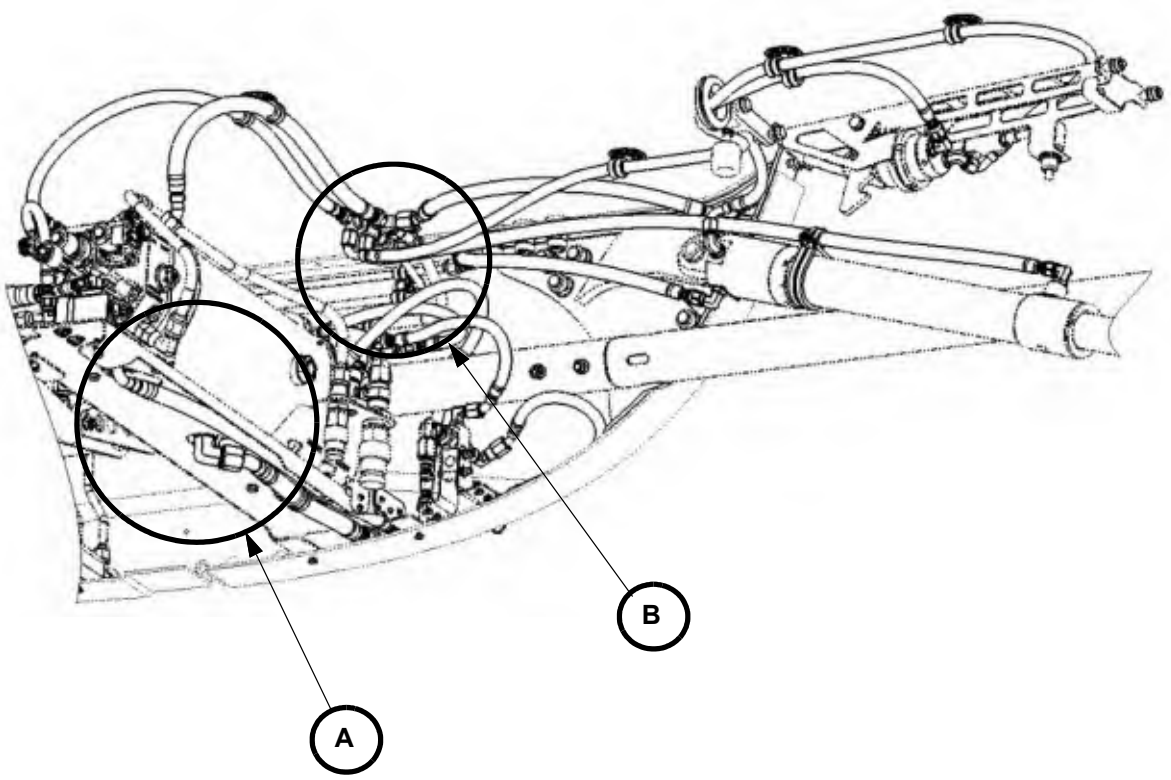

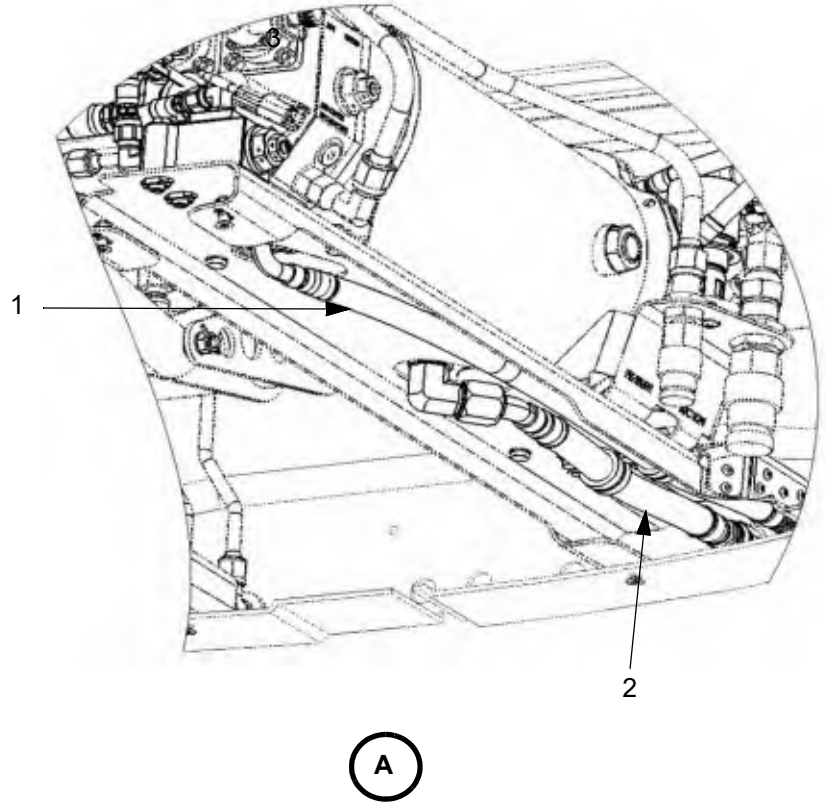

LEGEND

1. Pressure Line - From Pump
2. Suction Line - From Pump

Figure 29-10.9: Hydraulic Lines in the Wing Saddle (Sheet 3 of 4)

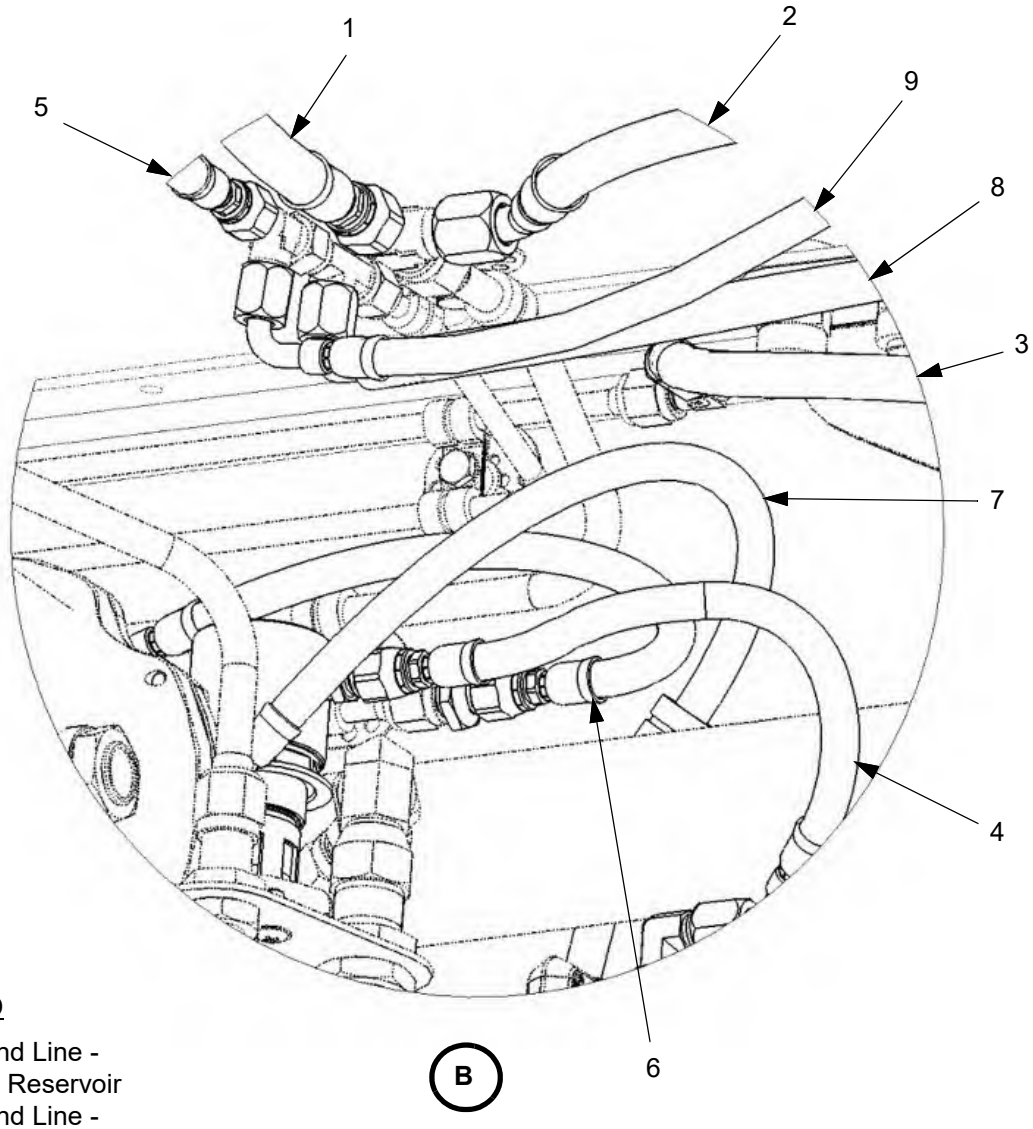

LEGEND

1. Extend Line - From Reservoir
2. Extend Line - To RH Main Actuator
3. Emergency Extend - To RH Main Actuator
4. P3 Pressure
5. Retract Line - From Reservoir
6. Return Line - From Blowdown Bottle
7. Case Drain Line (Piston Type Pump Only)
8. Retract Line - To RH Main Actuator
9. Retract Line - To RH Uplock Actuator

Figure 29-10.9: Hydraulic Lines in the Wing Saddle (Sheet 4 of 4)

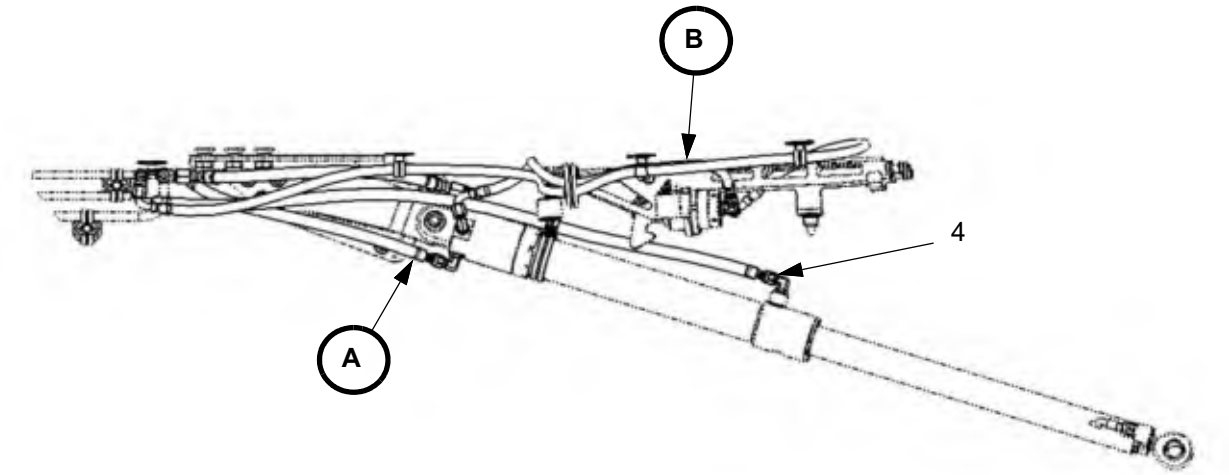

(Right side shown, left side opposite.)

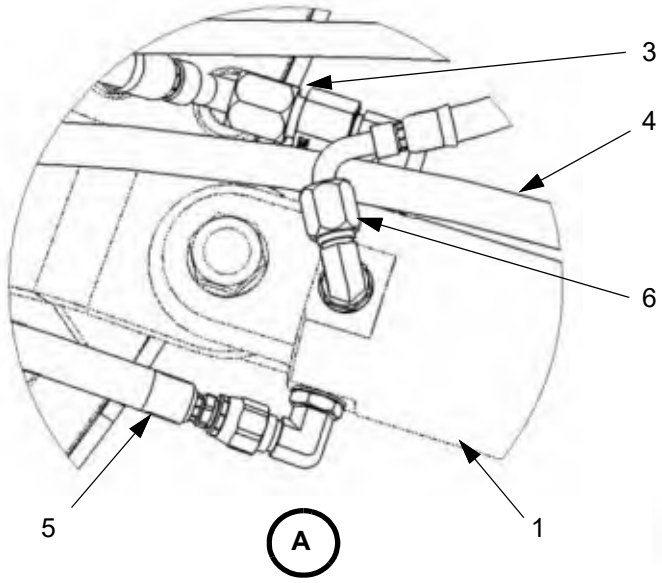

(View Looking Forward)

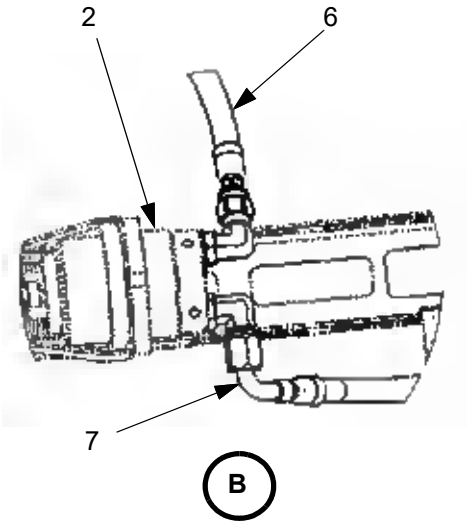

(View Looking Up)

LEGEND

1. Actuator
2. Uplock Actuator
3. Extend Line
4. Retract Line
5. Emergency Extend Line
6. Uplock Actuator to Extend Line
7. Uplock Actuator to Retract Line

J. Depressurize the Hydraulic System

WARNING: The hydraulic system can contain high pressures after engine shutdown. The sudden release of hydraulic fluid under pressure could cause serious injury or death. The system must be depressurized before it is opened for maintenance.

Note: The hydraulic reservoir is pressurized by regulated P3 bleed air. A small air vent lets air pressure bleed off the hydraulic reservoir when the engine is shut down. Depressurization takes approximately five minutes and can be heard at the reservoir. When not audible, the air pressure in the reservoir has been relieved, however hydraulic pressure will still be present in portions of the system.

(a) Jack the airplane (refer to Chapter 7-10).
(b) Connect a ground power unit to the airplane (refer to Chapter 24-40).
(c) Set the BATT 1 and BATT 2 switches to ON.
(d) Set the landing gear handle to the UP position.

Note: Selecting gear UP without hydraulic power applied will bleed off remaining hydraulic pressure. The amount the landing gear move is dependent on how much pressure remains in the system.

(e) When the landing gear stop moving, put the landing gear handle in the DOWN position.
(f) Manually put all three landing gear in the down and locked position.
(g) Make sure all three landing gear have green down and locked indications.
(h) Set the BATT 1 and BATT 2 switches to off.
(i) Disconnect the ground power unit from the airplane (refer to Chapter 24-40).
(j) Lower the airplane and remove the jacks (refer to Chapter 7-10).

K. Inspection and Testing

WARNING: Make sure all personnel and equipment are clear of the landing gear when the landing gear are in motion.

(a) Jack the airplane (refer to Chapter 7-10).
(b) Remove the cowling (refer to Chapter 71-10).
(c) Remove the airplane belly panels (refer to Chapter 57-10).

(d) Connect a hydraulic service cart to the airplane.

(e) Connect a ground power unit to the airplane (refer to Chapter 24-40).

(f) Service the hydraulic system as necessary (refer to Chapter 12-10).

(g) Inspect the reservoir and associated components for security, condition and leaks.

(h) Inspect the accumulator, hoses, and fittings for security, condition and leaks.. Make sure the accumulator is pressurized to 1200 ± 50 psig at 70°F, service with nitrogen (A-A-59503) as required.

(i) For aircraft with the piston type pump, inspect the suppressor, hoses, and fittings for security, condition and leaks. Make sure the suppressor is pressurized to 150 ± 50 psig at 70°F, service with nitrogen (A-A-59503) as required.

(j) For aircraft with the gear type pump, inspect the inline filter and hoses for security, condition and leaks.

(k) Turn the hydraulic service cart on.

Note: The hydraulic system should build pressure until the actuators are pressurized and the accumulator is charged. Watch the pressure gauge on the hydraulic service cart to verify the buildup of pressure and the shifting of the re-circulation valve (pressure should build to approximately 2500 psi then drop off to less than 100 psi when the system shifts into re-circulation mode).

(l) Verify all three green down and locked indicators (NOSE, LEFT, and RIGHT) are present on the pilot and copilot annunciation panels.

(m) Move the landing gear control to UP. During the retract sequence, monitor the gear as it retracts to verify smooth movement and proper clearance with airplane structure and components.

(n) Verify that during the retract sequence there are three red (NOSE, LEFT, and RIGHT) indications on the pilot and copilot annunciation panels.

(o) Once the gear have retracted, make sure the three red (NOSE, LEFT, and RIGHT) indications have extinguished.

Note: After retraction, hydraulic pressure will build to approximately 2500 psi then drop off to less than 100 psi when the system shifts into re-circulation mode.

(p) Verify that the uplocks are engaged, turn the hydraulic service cart off then pull the GEAR CTRL circuit breaker out. The landing gear should stay in the up position.

(q) Reset the GEAR CTRL circuit breaker then turn the hydraulic service cart on.

(r) Move the landing gear selector switch to DOWN. During the extend sequence, monitor the gear as it extends to verify smooth movement and proper clearance with airplane structure and equipment.

(s) Verify that during the extend sequence there are three red (NOSE, LEFT, and RIGHT) indications on the pilot and copilot annunciation panels.

(t) Verify that the three red (NOSE, LEFT, and RIGHT) indications on the instrument panel have extinguished and three green (NOSE, LEFT, and RIGHT) indications have illuminated.

Note: After extension, hydraulic pressure will build to approximately 2500 psi then drop off to less than 100 psi when the system shifts into re-circulation mode.

(u) Ensure the landing gear is fully extended and locked then turn the hydraulic service cart off.

(v) Check for leakage at all components, fittings, hoses, and tubing.

(w) Disconnect the hydraulic service cart.

(x) Verify the weight on wheels switches are actuated when the airplane is on jacks.

(y) Lower the airplane and remove the jacks (refer to Chapter 7-10).

(z) Verify the weight on wheels switches are not actuated when the airplane is in the weight-on-wheels configuration.

(aa) Set the BATT 1 and BATT 2 switches to off.

(ab) Disconnect external electrical power from the airplane (refer to Chapter 24-40).

(ac) Install the airplane belly panels (refer to Chapter 57-10).

(ad) Install the cowling (refer to Chapter 71-10).

L. Hydraulic Reservoir Bleed Air Adjustment/Check

(a) Set the BATT 1 and BATT 2 switches to off.

WARNING: The hydraulic lines can contain high pressures after engine shutdown. The sudden release of hydraulic fluid under pressure could cause serious injury or death. The system must be depressurized before it is opened for maintenance.

(b) Disconnect external electrical power from the airplane (refer to Chapter 24-40).

(c) Remove the airplane belly panels (refer to Chapter 57-10).

(d) Disconnect the bleed air supply line at the air pressure regulator on the reservoir, refer to Figure 29-10.10: Hydraulic Reservoir Bleed Air Adjustment/ Check.

(e) Assemble the test gauge assembly using the following

(i) 37°, -4 female to female flex line.
(ii) 37°, -4 tee fitting
(iii) 200 PSI calibrated pressure gauge

(f) Remove the vent/check valve from the reservoir.

Note: Remove the vent/check valve assembly at the union on the hydraulic reservoir.

(g) Install test gauge onto hydraulic reservoir assembly.

(h) Connect a dry compressed air source to the air pressure regulator.

(i) Visually confirm the hydraulic pump type installed, refer to Refer to Figure 29-10.13.

(j) Adjust/check the regulator as follows:

CAUTION: Because some aircraft after K105 may have the piston-type pump installed at the factory, visually verify the pump type installed before adjusting the reservoir head pressure.

(i) For aircraft SN: K003 - K104 w/o SB-0067 (piston-type hydraulic pump) make sure the pressure gauge indicates 40 ± 2 PSI. Adjust the regulator as needed.
(ii) For aircraft SN: K003 - K104 with SB-0067 and K105 and On (gear-type hydraulic pump), make sure the pressure gauge indicates 6 ± 2 PSI. Adjust the regulator as needed.

(k) Disconnect the compressed air source from the regulator and reconnect the bleed air supply line.

WARNING: Use caution when loosening the t-fitting, the remaining air pressure in the hydraulic reservoir will be released.

(l) Remove the test gauge assembly and install the vent.

(m) Install the airplane belly panels (refer to Chapter 57-10).

Figure 29-10.10: Hydraulic Reservoir Bleed Air Adjustment/Check

LEGEND

1. Bleed Air Supply
2. Regulator
3. Vent/Check Valve

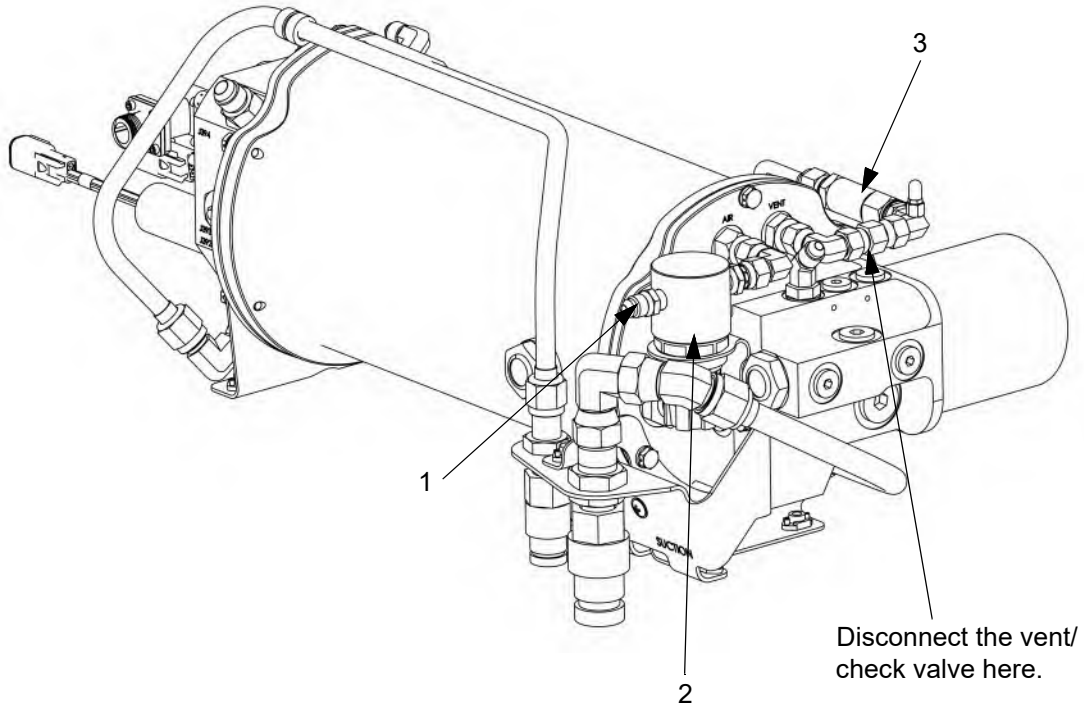

Figure 29-10.11: Hydraulic Pump Identification

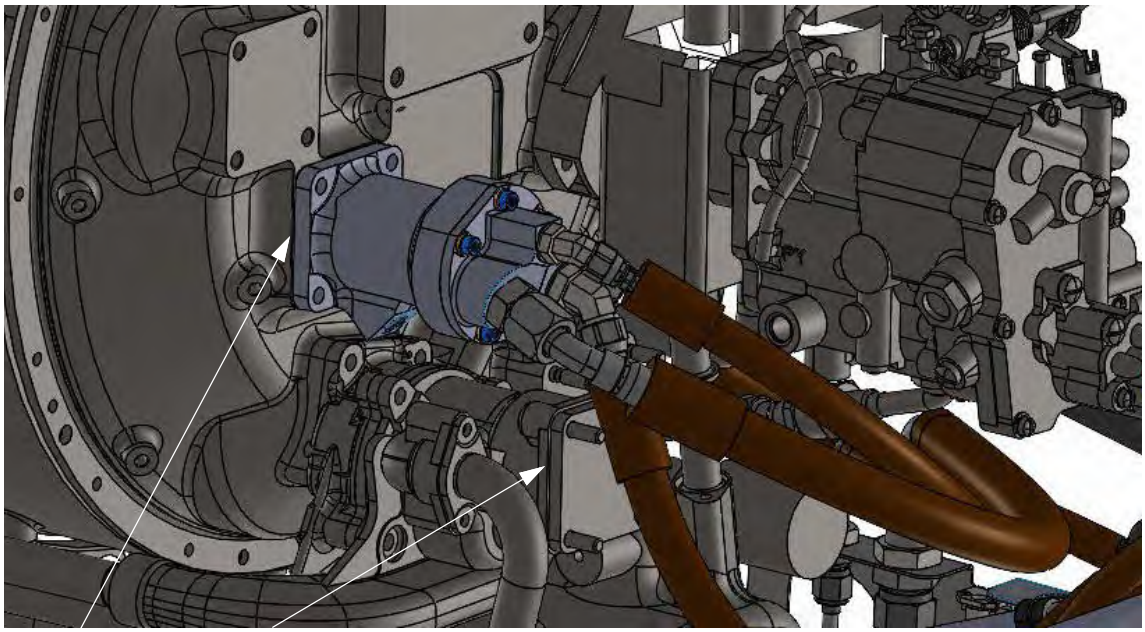

PISTON-TYPE HYDRAULIC PUMP

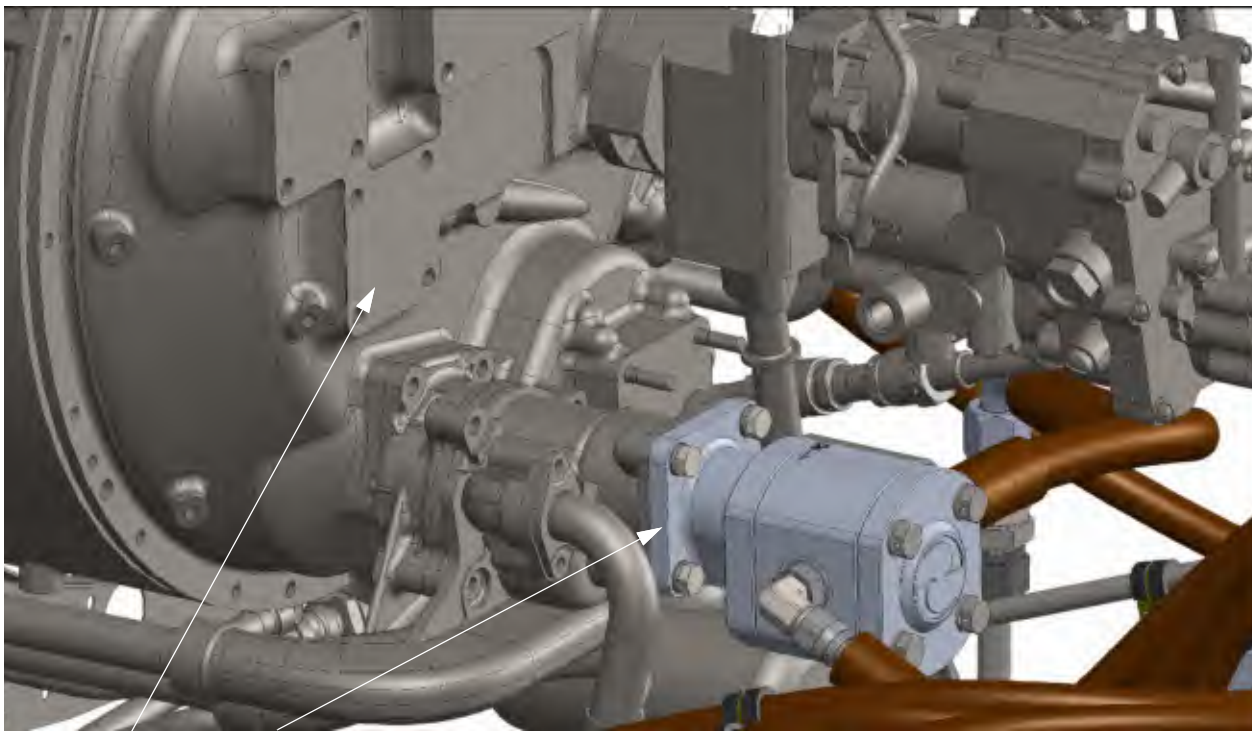

GEAR-TYPE HYDRAULIC PUMP

M. Hydraulic System Flush

Table 29-10.1: Required Tools, Equipment, and Materials

#	Part Number	Description	Qty
1.	-	Hydraulic Aircraft Jacks, 10,000lb capacity.	3
2.	FK07100001	Lifting Pins	3
3.	-	Hydraulic Service Cart, (MIL-PRF-83282 or MIL-PRF-87257) 2500 psi, maximum 3.5 gpm capacity.	1
4.	MIL-PRF-83282 or MIL-PRF-87257	Hydraulic fluid.	A/R
5.	-	Union fitting, #4 to #6 37° Flare	2
6.	-	Union fitting, #4 to #4 37° Flare	1
7.	-	Caps, #4, 37° Flare	4
8.	-	Caps, #6, 37° Flare	2
9.	-	Receptacle for contaminated hydraulic fluid.	
10.	-	28v Ground Power Unit	1

(1) Pull the SPS CMP 1A, SPS CMP 1B, SPS CMP 2A, SPS CMP 2B, IGNITER, L PITOT HEAT, L PITOT HT CTRL, L STALL HEAT, R STALL HEAT, R PITOT HEAT, R PITOT HT CTRL and PUSHER circuit breakers.

(2) Jack the airplane (refer to Chapter 7-10).

(3) Remove the airplane belly panels as needed to access the hydraulic reservoir (refer to Chapter 57-10).

(4) Connect a ground power unit to the airplane (refer to Chapter 24-40).

(5) Connect a hydraulic service cart to the hydraulic system.

(6) Set the BATT 1 and BATT 2 switches to ON.

(7) Turn on the hydraulic service cart.

(8) Put the landing gear handle in the UP position.

(9) As soon as all three landing gear down-locks have released, shut off the hydraulic service cart. Make sure the landing gear do not return to the down and locked position.

(10) Set the BATT 1 and BATT 2 switches to off.

(11) Pull and collar the GEAR CONTROL circuit breaker.

WARNING: The hydraulic system is depressurized with all 3 landing gear between the down-and-locked and up-locked positions, but use caution when opening hydraulic lines in the event any residual hydraulic pressure remains.

(12) Flush the hydraulic pump lines as follows:

(a) Remove the top and left side cowls (refer to Chapter 71-10).

(b) Remove the left intercooler (refer to Chapter 21-20).

Note: Place towels or rags to collect any fluid that may drain from the suction, pressure, and case drain lines at the hydraulic reservoir when they are disconnected.

(c) Disconnect the suction, pressure, and case drain lines from the hydraulic pump. Cap the open fittings on the pump.

(d) Disconnect the suction, pressure, and case drain lines from the hydraulic reservoir. Cap the open fittings on the reservoir.

(e) At the reservoir, put the suction, pressure, and case drain lines in a receptacle to receive contaminated fluid.

(f) At the hydraulic pump, using a squeeze bottle or similar, flush clean hydraulic fluid through the suction, pressure, and case drain lines until there are no indications of contaminated fluid coming out of the lines in the receptacle at the hydraulic reservoir.

(g) Remove the caps and reconnect the suction, pressure, and case drain lines at the hydraulic pump and hydraulic reservoir.

(13) Configure the hydraulic lines for the actuator flush as follows:

(a) Disconnect the right main landing gear actuator extend and retract lines from the tee fittings. Install caps on the tee fittings.

(b) Disconnect the left main landing gear actuator extend and retract lines from the tee fittings. Install caps on the tee fittings.

(c) Disconnect the nose landing gear actuator extend and retract lines from the bulkhead fittings. Install caps on the bulkhead fittings.

(14) Flush each actuator as follows:

(a) With the landing gear close to the down-and-locked position, place the retract line in a source of clean hydraulic fluid and the extend line in a receptacle to accept contaminated fluid.

(b) Lift the landing gear slowly towards the up-lock hook, stopping before the landing gear engages the hook. This will purge contaminated fluid from the extend side of the actuator. Hold the landing gear in this position.

(c) Place the extend line in the clean source of hydraulic fluid and the retract line in the contaminated fluid receptacle.

(d) Slowly extend the landing gear until they are just short of the down-and-locked position. This will purge contaminated fluid from the retract side of the actuator.

(e) Repeat steps 14(a) - 14(d) until all signs of contaminated fluid are gone.

(f) Repeat steps 14(a) - 14(e) at all three actuators.

(g) After all three actuators have been flushed, remove the caps from the fittings and connect the extend and retract lines to the fittings at all three landing gear.

(15) Configure the actuator hydraulic lines for the system flush as follows:

(a) Disconnect the Extend and Retract lines from the left main gear actuator.

(b) Use a union fitting (#4 to #6, 37° flare) to connect the extend and retract lines together.

(c) Install caps on the open actuator fittings.

(d) Disconnect the extend and retract lines from the right main gear actuator.

(e) Use a union fitting (#4 to #6, 37° flare) to connect the extend and retract lines together.

(f) Install caps on the open actuator fittings.

(g) Disconnect the extend and retract lines from the nose gear actuator.

(h) Use a union fitting (#4 to #4, 37° flare) to connect the extend and retract lines together.

(i) Install caps on the open actuator fittings.

(16) Install a new hydraulic system filter.

(17) Set the BATT 1 and BATT 2 switches to ON.

(18) Put the landing gear handle in the DN (extend) position.

(19) Reset the GEAR CONTROL circuit breaker.

(20) Turn the hydraulic service cart on.

(21) Run the hydraulic service cart for approximately 10 minutes.

Note: Oil should circulate from the gear extend hose through the gear retract hose and back to tank. This oil flow will pass through the hydraulic oil filter on the way back to tank.

(22) Turn the hydraulic service cart off.

(23) Place the landing gear handle in the UP (retract) position.

(24) Turn the hydraulic service cart on.

(25) Run the hydraulic mule for approximately 10 minutes.

Note: Oil should circulate from the gear retract hose through the gear extend hose and back to tank. This oil flow will pass through the hydraulic oil filter on the way back to tank.

(26) Turn the hydraulic service cart off.

(27) Place the landing gear handle in the DN (extend) position.

(28) Set the BATT 1 and BATT 2 switches to off.

(29) Remove the hydraulic system filter and check for debris.

(30) Remove the magnetic drain plug at the bottom of the hydraulic reservoir and drain all the hydraulic fluid into a suitable container.

(31) Inspect the fluid for debris.

(32) Inspect the magnetic drain plug for debris.

(33) Reinstall the magnetic drain plug and torque to 20 - 25 ft-lbs.

(34) If debris is found in the fluid or filter repeat steps (16) through (33).

(35) Install a new hydraulic system filter.

(36) Service the hydraulic reservoir.

(37) Reconnect the hydraulic lines as follows:

(a) Remove the caps from the left and right main and nose gear actuator fittings.

(b) Remove the union fitting from the left and right main and nose gear extend and retract lines.

(c) Connect the Extend and Retract lines to the Left Main Gear Actuator.

(d) Connect the Extend and Retract lines to the Right Main Gear Actuator.

(e) Connect the Extend and Retract lines to the Nose Gear Actuator.

(38) Set the BATT 1 and BATT 2 switches to ON.

(39) Turn the hydraulic service cart on.

(40) Cycle the landing gear to leak check the hydraulic lines and reservoir.

CAUTION: Make sure the landing gear are extended and all 3 green down and locked indications are present when done.

(41) Turn the hydraulic service cart off.

(42) Set the BATT 1 and BATT 2 switches to off.

(43) Reset the SPS CMP 1A, SPS CMP 1B, SPS CMP 2A, SPS CMP 2B, IGNITER, L PITOT HEAT, L PITOT HT CTRL, L STALL HEAT, R STALL HEAT, R PITOT HEAT, R PITOT HT CTRL and PUSHER circuit breakers.

(44) Disconnect the hydraulic service cart.

(45) Disconnect the ground power unit from the airplane (refer to Chapter 24-40).

(46) Lower the airplane and remove the jacks (refer to Chapter 7-10).

(47) Install the left intercooler (refer to Chapter 21-20).

(48) Put the airplane in a suitable run-up area and start the engine, refer to the latest revision of the appropriate POH/AFM SK0500xxxx.

(49) Run the engine for 5 minutes at flight idle, then shut down the engine, refer to the latest revision of the appropriate POH/AFM SK0500xxxx.

(50) Check the suction, pressure, and case drain line connections at the hydraulic pump and hydraulic reservoir for leaks.

(51) Install the airplane belly panels (refer to Chapter 57-10).

(52) Install the top and left side cowls (refer to Chapter 71-10).

Figure 29-10.12: Gear Pump Bleeding Equipment

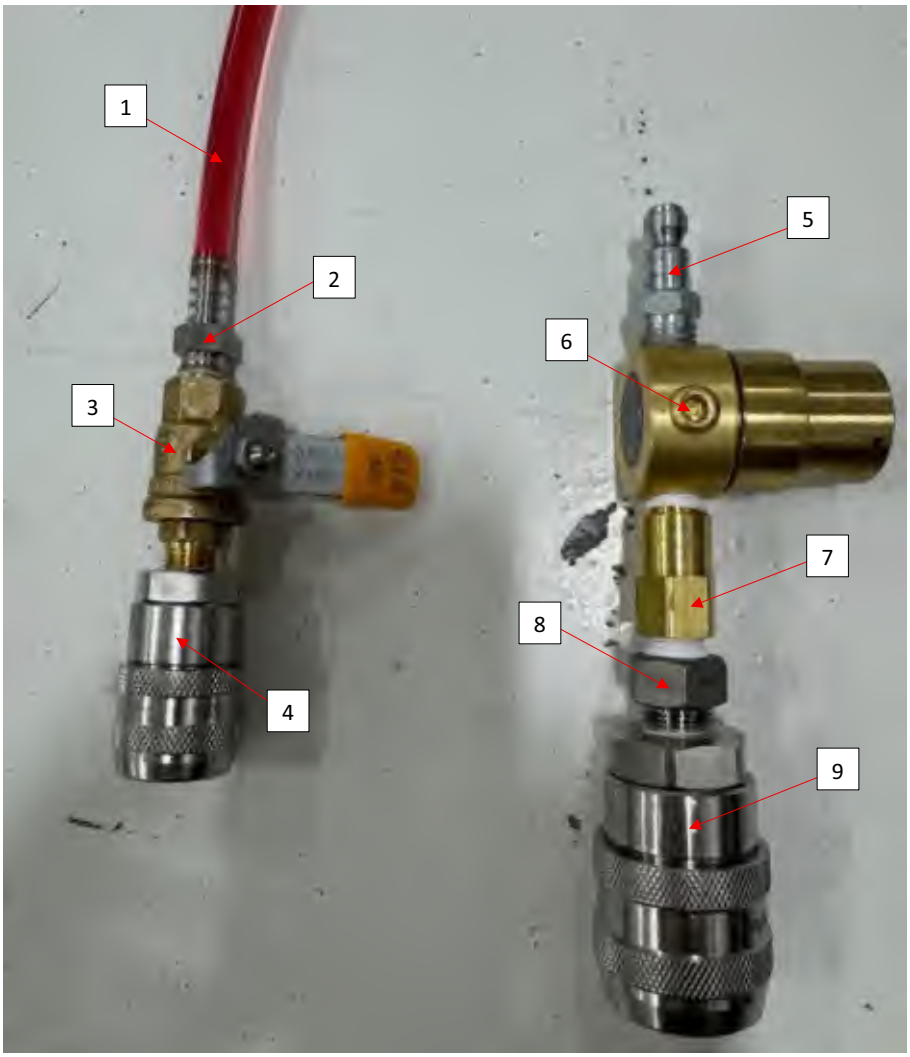

	Low Pressure Side Bleed Adapter		
Item Number	**Part Number**	**Description**	**Vendor**
9	S71-3C6-6F	-8 QD Mount	Parker
8	4464K831	Straight Reducer	McMaster-Carr
7	7768K66	Check Valve	McMaster-Carr
6	9386K2	Regulator (10 psi)	McMaster-Carr
5	2C	Tru-Flate, Automotive Interchange Quick Connect Air Couplings - 10 Series	Parker
	HighPressure Side Bleed Adapter		
4	S71-3C4-4F	-6 QD Mount	Parker
3	47865K11	On/Off Ball Valve	McMaster-Carr
2	53505K64	Barbed Hose Fitting	McMaster-Carr
1	8349T38	PVC Tubing 5 ft	McMaster-Carr

EMERGENCY EXTENSION

1. Description

In the event of a main hydraulic system malfunction, the emergency extension system can be used to extend the landing gear. This system includes a nitrogen-filled tank, an emergency extension handle, and a reset handle. When the emergency extension handle is pulled, a valve is actuated that discharges pressurized nitrogen into the extend side of the landing gear actuators to fully extend the landing gear to the down-and-locked position. Actuating the emergency extension handle also connects the retraction side of the hydraulic system to the hydraulic reservoir to prevent a hydraulic lock when the nitrogen tank is discharged. Once pulled, the lever is locked in the actuated position until it is reset by maintenance personnel.

2. Maintenance Practices

A. Emergency Landing Gear Extension Bottle Assembly

(1) Removal

(a) Set the BATT 1 and BATT 2 switches to off.

(b) Disconnect external electrical power from the airplane (refer to Chapter 24-40).

(c) Gain access to the reset handle as follows:

(i) Open the access door to the compartment between the pilot and copilot seats.

(ii) Remove the fire extinguisher and mount.

(iii) Remove the FOD tray.

(d) Drain the emergency landing gear extension bottle through the service valve.

(e) Disconnect the wiring harness from the pressure transducer.

(f) Disconnect the two hoses connecting the emergency landing gear extension bottle and valve assembly to the hydraulic system. Note the port each hose is attached to for re-attachment.

(g) Cap or plug all open connections.

(h) Open the hose clamp attaching the tank and valve assembly to the forward mounting bracket.

(i) Remove the bolts and washers attaching the tank and valve assembly to the aft mounting bracket.

(j) Cut the tie straps attaching the reset handle and cable to the standoffs then remove the cable from the support bracket.

(k) Disconnect the overboard vent hose connected to the fitting in the bottom of the fuselage.

(l) Remove the emergency landing gear extension bottle and valve assembly from the airplane.

(m) Remove the pressure transducer as necessary.

(n) Remove fittings as necessary.

(2) Installation

(a) Install fittings if they have been removed.

(b) If removed, install the pressure transducer using Loctite™ 567 or anti-seize PTFE tape conforming to A-A-58092-2-2. Torque to 30 ft-lbs.

(c) Connect the overboard vent hose to the fitting in the bottom of the fuselage.

(d) Put the emergency landing gear extension bottle and valve assembly into the mounting brackets.

(e) Attach the tank and valve assembly to the forward mounting bracket using the hose clamp. Torque the hose clamp 15 to 25 in-lbs.

(f) Attach the tank and valve assembly to the aft mounting bracket using bolts and washers.

(g) Install the reset handle cable into the cable bracket then attach the cable to the standoffs using tie straps.

(h) Attach the hydraulic system hoses to the emergency landing gear extension bottle and valve assembly.

(i) Verify the activation handle (red T-handle) is in the ready position. If it is not, pull the reset handle and close the discharge valve by moving the activation handle to the ready position.

(j) Service the emergency landing gear extension bottle (refer to Chapter 12-10).

CAUTION: Make sure to thoroughly inspect the bottle and fittings for leaks after blowing the landing gear down.

(k) Do a leak check of the bottle and all fittings.

Note: Make sure the bottle, lines, and fittings warm back to ambient temperature before checking for leaks.

(l) Do the Operational Test of the emergency gear down system (refer to Chapter 29-20.2.A.3).

(m) Install the FOD tray, fire extinguisher and mount, and close the access door.

(3) Operational Test

(a) Raise the airplane using aircraft jacks. Ensure there is sufficient clearance from the ground to retract the landing gear (refer to Chapter 7-10).

(b) Remove belly panels as needed to access the hydraulic service connections (refer to Chapter 57-10).

(c) Connect a hydraulic service cart to the hydraulic system.

(d) Connect a ground power unit to the airplane (refer to Chapter 24-40).

(e) Set the BATT 1 and BATT 2 switches to ON.

(f) Turn on the hydraulic service cart then wait for the system to pressurize.

Note: The airplane hydraulic system should build pressure until the actuators are pressurized and the accumulator is charged. Pressure should build to approximately 2500 psi and then decrease to less than 100 psi when the system shifts into re-circulation mode.

(g) Put the landing gear selector switch in the UP position.

(h) Once the landing gear are retracted, verify the three red (NOSE, LEFT, and RIGHT) indications on both annunciation panels extinguish and three white (UP) indications appear on the MFD.

(i) Turn off the hydraulic service cart.

(j) Pull the GEAR CTRL circuit breaker out.

(k) Open the access door to the compartment between the pilot and copilot seats.

(l) Very slowly pull the red emergency extension handle on the nitrogen emergency blowdown system just until the gear starts to extend.

(m) After the gear has fully extended and locked, verify there are three green (NOSE, LEFT, and RIGHT) indications present.

(n) Slowly pull the handle to the lock.

WARNING: Plumbing and actuators are now charged with high pressure nitrogen. Leave the GEAR CTRL circuit breaker out to avoid potential venting of nitrogen and vaporized hydraulic fluid at the reservoir.

(o) Check the bottle and all fittings for leaks.

Note: Make sure the bottle, lines, and fittings warm back to ambient temperature before checking for leaks.

WARNING: Pulling the reset handle will vent the nitrogen pressure in the plumbing and actuators through the vent at the bottom of the fuselage. The venting nitrogen may contain vaporized hydraulic fluid that is an inhalation hazard.

WARNING: Plumbing and actuators are now charged with high pressure nitrogen. Leave the GEAR Breaker in the OUT position until after the red discharge handle is reset to avoid potential rupture of low pressure hydraulic filter.

(p) Put the landing gear selector switch in the DOWN position.

CAUTION: Make sure the landing gear and the landing gear switch position align before resetting the GEAR CTRL circuit breaker.

(q) Reset the GEAR CTRL circuit breaker.

(r) Reset the emergency landing gear extension system (refer to Chapter 29-20.2.A.4).

(s) Close the compartment access door.

(t) Verify the three green (NOSE, LEFT, and RIGHT) down and locked indications are present.

(u) Install the belly panels (refer to Chapter 57-10).

(v) Reset Emergency Gear Extension system per 29-20.2.A.4.

(w) Set the BATT 1 and BATT 2 switches to OFF.

(x) Disconnect external electrical power from the airplane (refer to Chapter 24-40).

(y) Lower the airplane and remove the jacks (refer to Chapter 7-10).

(4) Reset the Emergency Gear Extension System

CAUTION: Wait a minimum of 10 minutes after using the emergency extension system before performing the reset procedure or damage to the system may occur.

(a) Make sure the BATT 1 and BATT 2 switches are set to off.

(b) Raise the airplane using aircraft jacks. Ensure there is sufficient clearance from the ground to retract the landing gear (refer to Chapter 7-10).

(c) Remove belly panels as needed to access the hydraulic service connections (refer to Chapter 57-10).

(d) Gain access to the reset handle as follows:

(i) Open the access door to the compartment between the pilot and copilot seats.

(ii) Remove the fire extinguisher and mount.

(iii) Remove the FOD tray.

(e) Drain the emergency landing gear extension bottle through the service valve.

(f) Place a suitable container below the emergency extension bottle vent on the bottom of the fuselage to collect hydraulic fluid.

WARNING: Pulling the reset handle will vent the nitrogen pressure in the plumbing and actuators through the vent at the bottom of the fuselage. The venting nitrogen may contain vaporized hydraulic fluid that is an inhalation hazard.

(g) Pull the reset cable handle and slowly lower the emergency extension handle. Release the reset handle. Refer to Figure 29-20.1.

Note: Make sure the bottle, lines, and fittings warm back to ambient temperature before servicing the bottle.

(h) Recharge the emergency landing gear extension bottle (refer to Chapter 12-10).

(i) Connect a hydraulic service cart to the hydraulic system.

(j) Turn on the hydraulic service cart then wait for the system to pressurize.

Note: The airplane hydraulic system should build pressure until the actuators are pressurized and the accumulator is charged. Pressure should build to approximately 2500 psi and then decrease to less than 100 psi when the system shifts into re-circulation mode.

(k) Retract then extend the landing gear a minimum of 5 times to purge any nitrogen out of the system.

(l) Visually inspect the airplane hydraulic system to ensure there are no leaks.

(m) Turn off the hydraulic service cart.

(n) Verify the three green (NOSE, LEFT, and RIGHT) down and locked indications are present.

(o) Set the BATT 1 and BATT 2 switches to OFF.

(p) Disconnect the hydraulic service cart.

(q) Install the airplane belly panels (refer to Chapter 57-10).

(r) Disconnect external electrical power from the airplane (refer to Chapter 24-40).

(s) Lower the airplane and remove the jacks (refer to Chapter 7-10).

Figure 29-20.1: Reset the Emergency Gear Extension System

LEGEND
1. Emergency Extension Handle
2. Reset Handle
3. Reset Cable

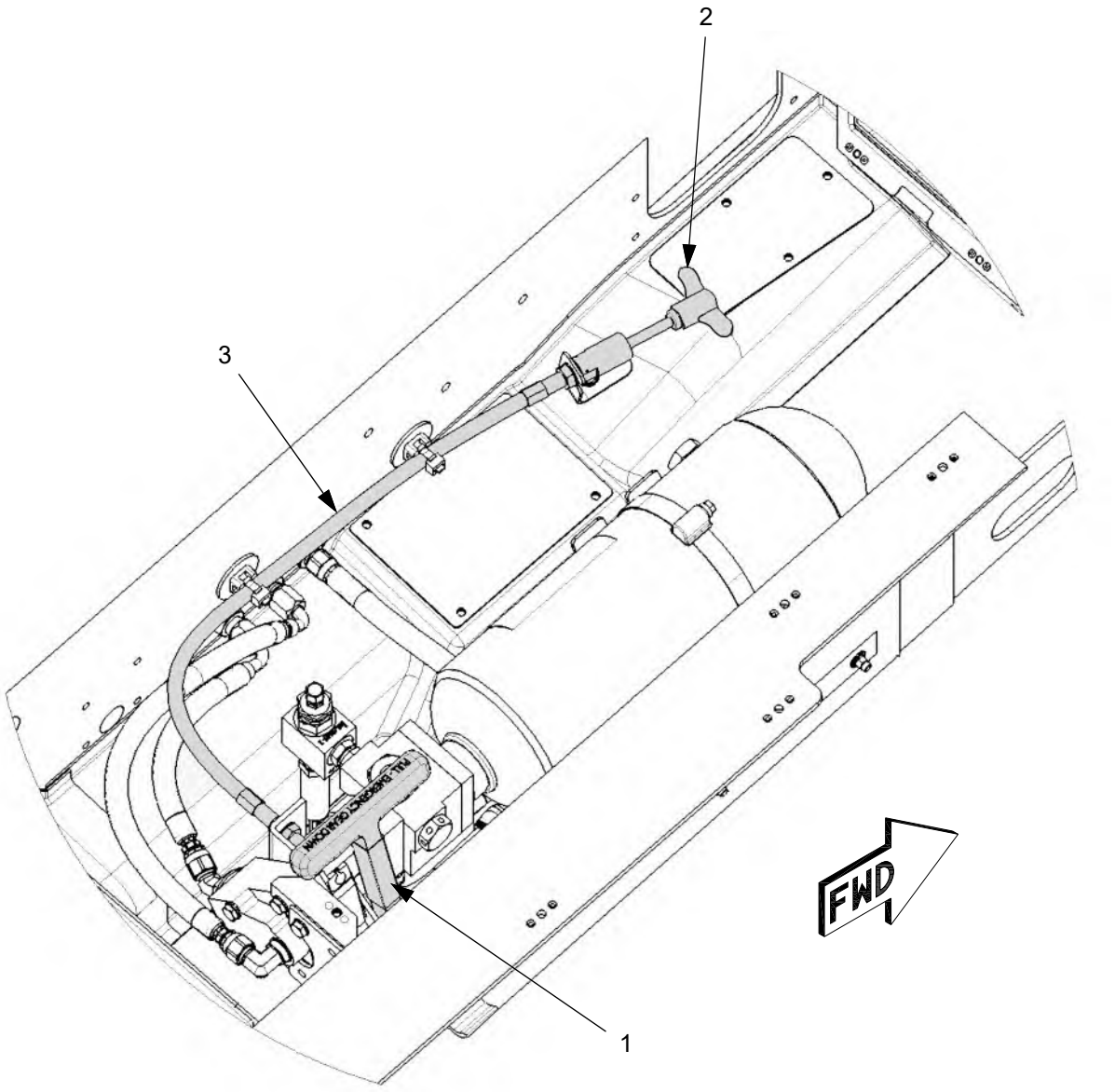

B. 5-Year Hydrostatic Test

Hydrostatically test the nitrogen cylinder every five years from the date of manufacture of the cylinder. Replace the cylinder if it fails the test.

Figure 29-20.2: Emergency Landing Gear Extension Bottle and Valve Assembly (Sheet 1 of 4)

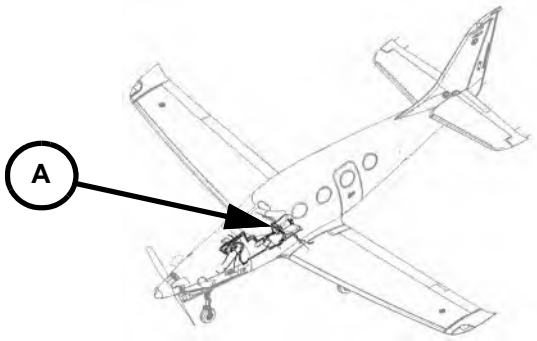

LEGEND
1. Emergency Landing Gear Extension Bottle
2. Mounting Bracket
3. Nitrogen Fill Valve
4. Emergency Extension Handle
5. Reset Cable
6. Pressure Transducer
7. Vent Line
8. Pressure Line (To landing Gear)

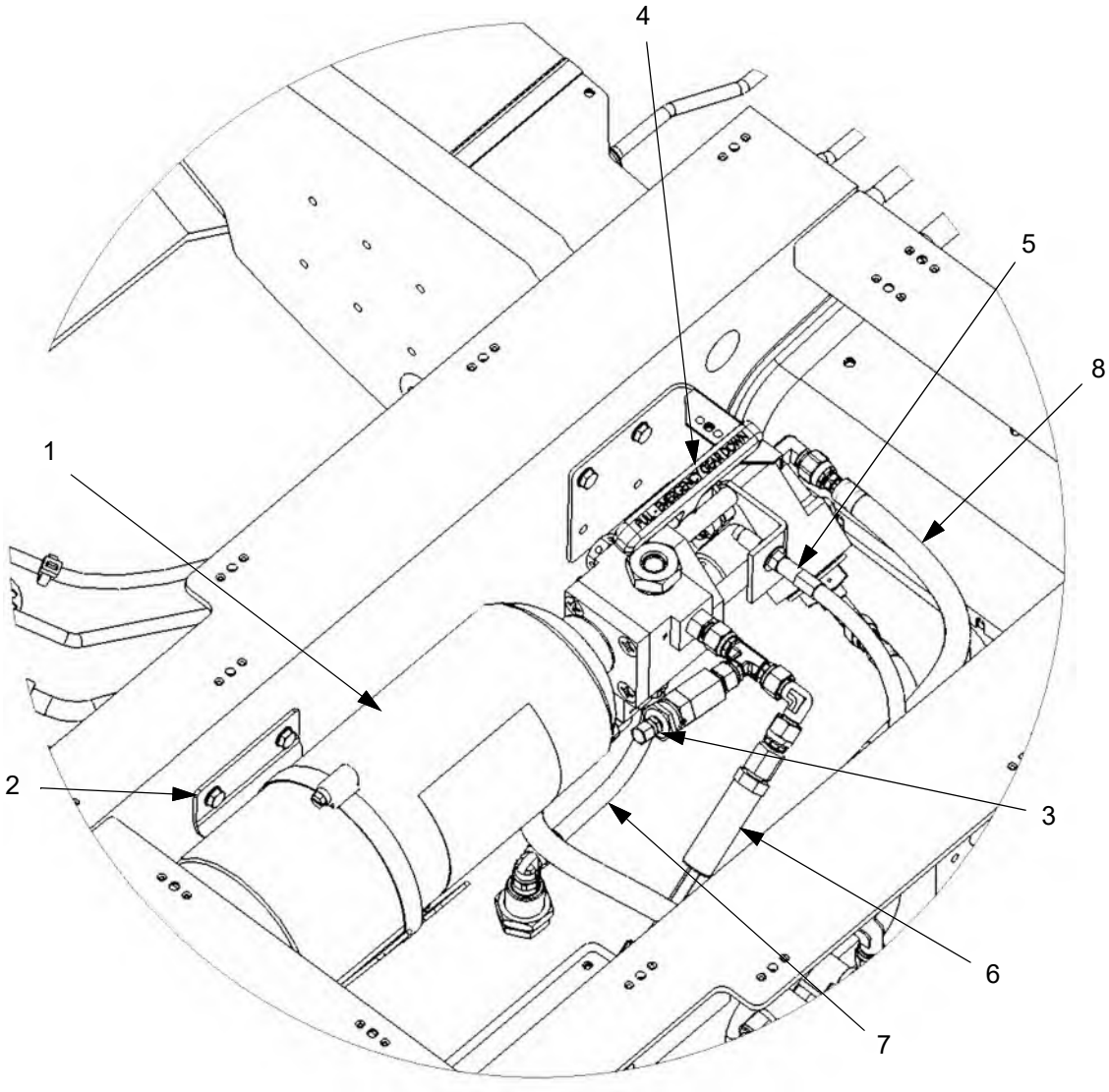

SN: K003 - K041 w/o SL-0014

A1

Figure 29-20.2: Emergency Landing Gear Extension Bottle and Valve Assembly (Sheet 2 of 4)

LEGEND

1. Emergency Landing Gear Extension Bottle
2. Mounting Bracket
3. Nitrogen Fill Valve
4. Emergency Extension Handle
5. Reset Cable
6. Pressure Transducer
7. Vent Line
8. Pressure Line (To landing Gear)

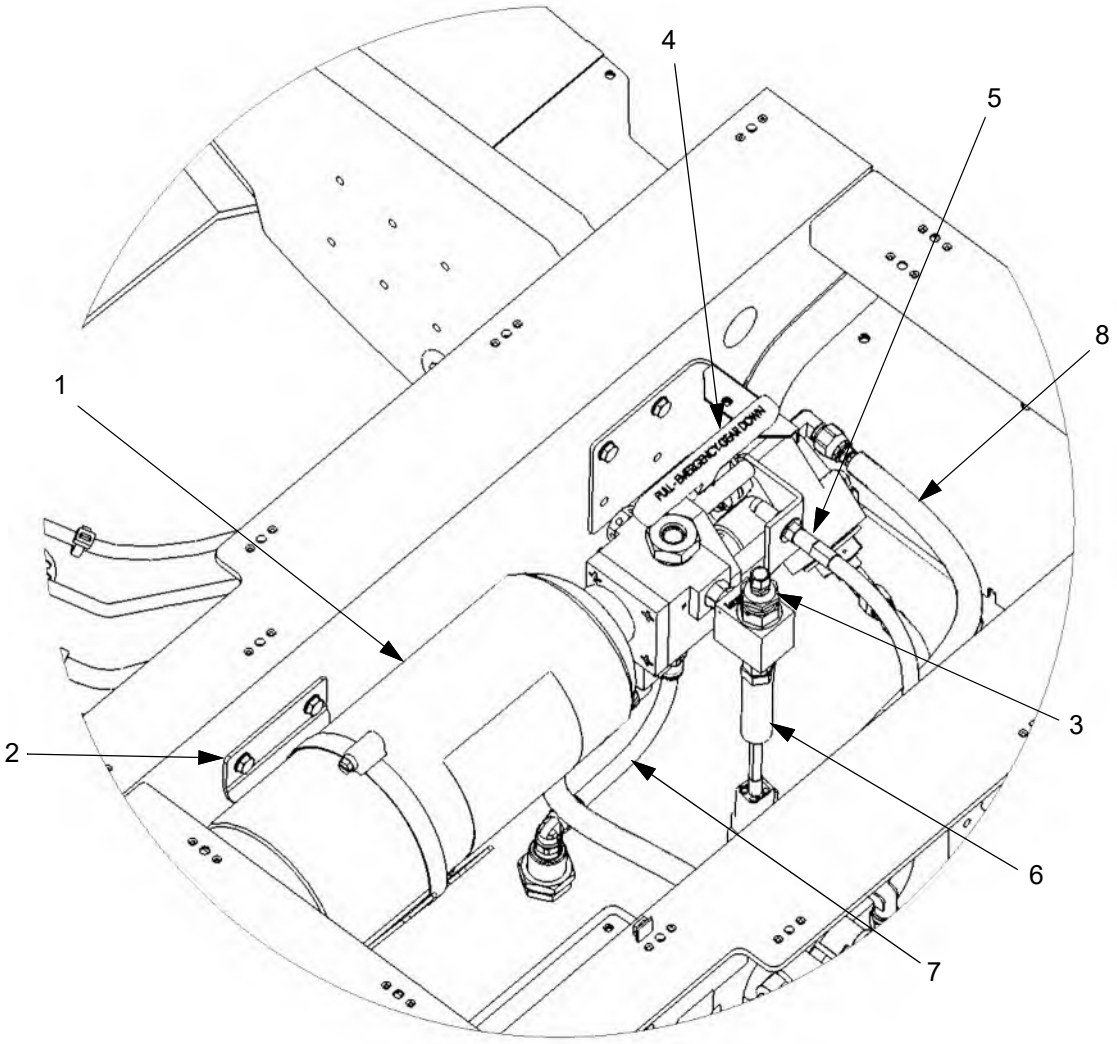

SN: K042 and On and K003 - K041 w/ SL-0014

A2

Figure 29-20.2: Emergency Landing Gear Extension Bottle and Valve Assembly (Sheet 3 of 4)

LEGEND
1. Mounting Bracket
2. Bolt
3. Washer
4. Locknut
5. Silicone Rubber Sheet

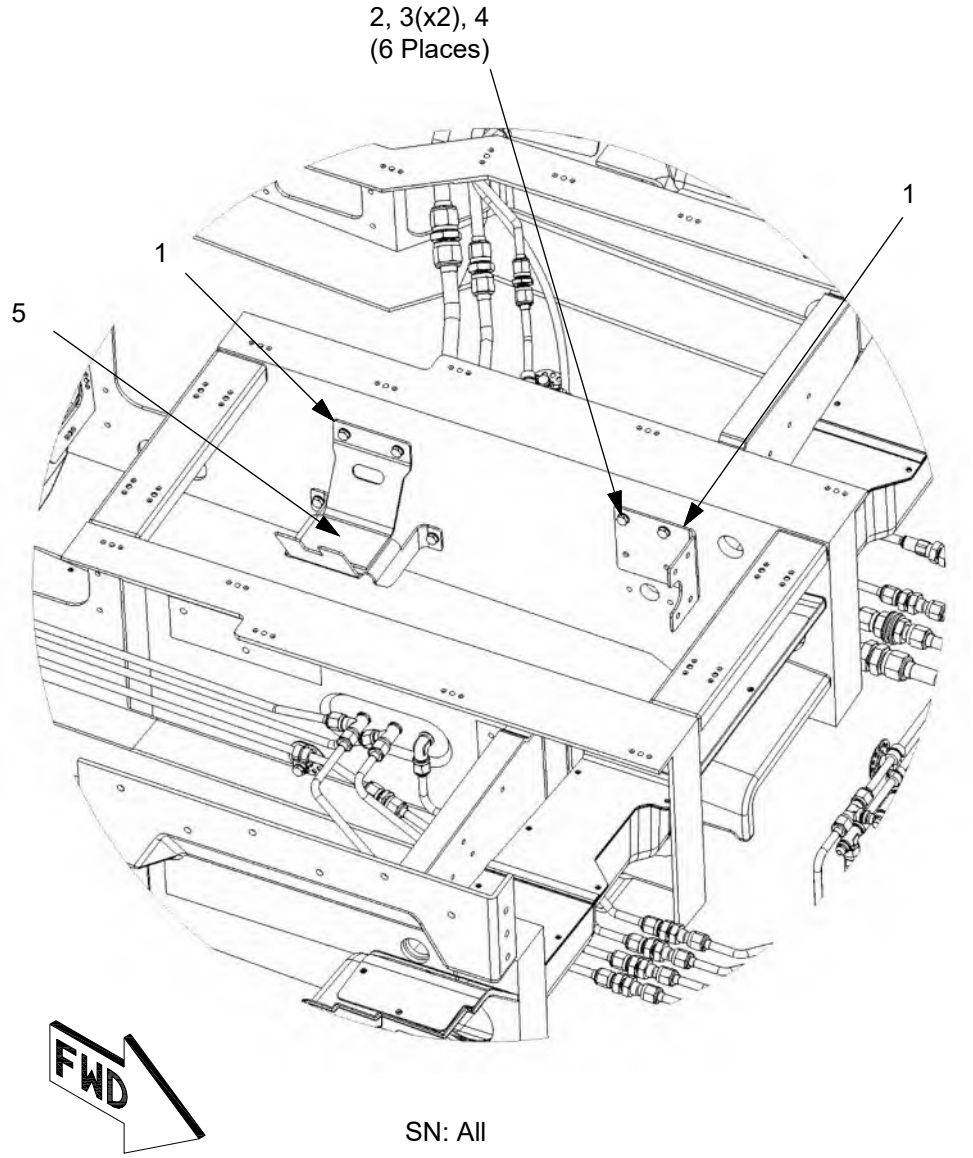

SN: All

A3

Figure 29-20.2: Emergency Landing Gear Extension Bottle and Valve Assembly (Sheet 4 of 4)

LEGEND
1. FOD Tray
2. Bolt
3. Washer

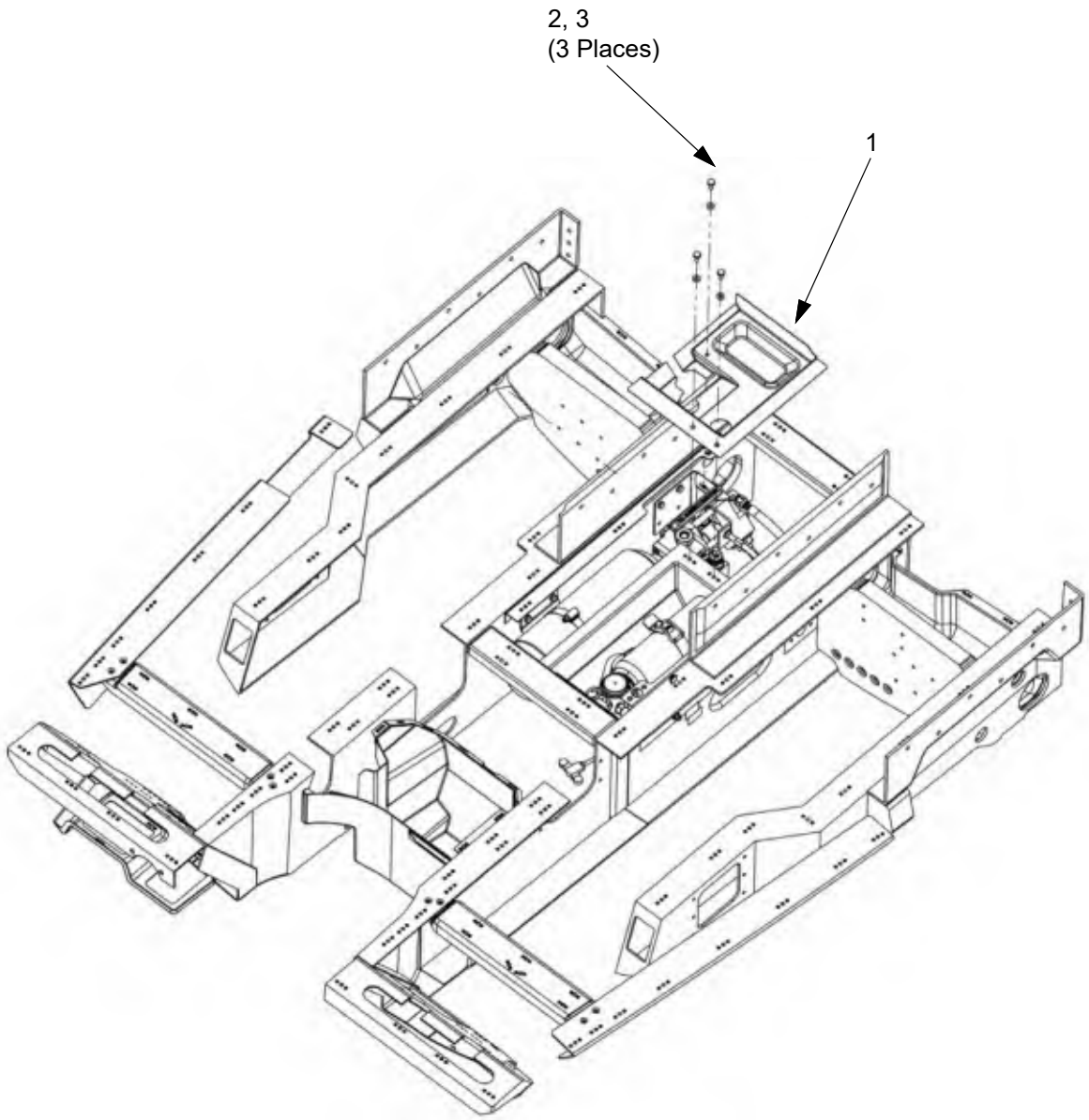

SN: K042 and On, and K003 - K041 w/ SL-0014 Shown
K003- K041 w/o SL-0014 Similar

A4

CHAPTER
30

Ice and Rain Protection

This Page Intentionally Left Blank

List of Effective Pages

Chapter/Section	Page Number	Effective Date
30-Title	Page 1	02 Jan 2020
30-Title	Page 2	02 Jan 2020
30-LOEP	Page 1	08 Sep 2026
30-LOEP	Page 2	08 Sep 2026
30-LOEP	Page 3	08 Sep 2026
30-LOEP	Page 4	20 Oct 2023
30-TOC	Page 1	20 Oct 2023
30-TOC	Page 2	02 Jan 2020
30-00	Page 1	20 Oct 2023
30-00	Page 2	02 Jan 2020
30-00	Page 3	02 Jan 2020
30-00	Page 4	20 Oct 2023
30-10	Page 1	10 Jul 2025
30-10	Page 2	20 Oct 2023
30-10	Page 3	20 Oct 2023
30-10	Page 4	20 Oct 2023
30-10	Page 5	20 Oct 2023
30-10	Page 6	20 Oct 2023
30-10	Page 7	20 Oct 2023
30-10	Page 8	08 Sep 2026
30-10	Page 9	08 Sep 2026
30-10	Page 10	20 Oct 2023
30-10	Page 11	08 Apr 2024
30-10	Page 12	20 Oct 2023
30-10	Page 13	20 Oct 2023
30-10	Page 14	20 Oct 2023
30-10	Page 15	20 Oct 2023
30-10	Page 16	20 Oct 2023
30-10	Page 17	20 Oct 2023
30-10	Page 18	08 Sep 2026
30-10	Page 19	20 Oct 2023
30-10	Page 20	20 Oct 2023
30-10	Page 21	20 Oct 2023
30-10	Page 22	20 Oct 2023
30-10	Page 23	20 Oct 2023
30-10	Page 24	20 Oct 2023
30-10	Page 25	20 Oct 2023
30-10	Page 26	20 Oct 2023
30-10	Page 27	20 Oct 2023
30-10	Page 28	20 Oct 2023

30-10 ..... Page 29 ..... 20 Oct 2023
30-10 ..... Page 30 ..... 20 Oct 2023
30-10 ..... Page 31 ..... 20 Oct 2023
30-10 ..... Page 32 ..... 20 Oct 2023
30-10 ..... Page 33 ..... 20 Oct 2023
30-10 ..... Page 34 ..... 20 Oct 2023
30-10 ..... Page 35 ..... 20 Oct 2023
30-10 ..... Page 36 ..... 20 Oct 2023
30-10 ..... Page 37 ..... 20 Oct 2023
30-10 ..... Page 38 ..... 20 Oct 2023
30-10 ..... Page 39 ..... 20 Oct 2023
30-10 ..... Page 40 ..... 20 Oct 2023
30-10 ..... Page 41 ..... 20 Oct 2023
30-10 ..... Page 42 ..... 20 Oct 2023
30-10 ..... Page 43 ..... 20 Oct 2023
30-10 ..... Page 44 ..... 20 Oct 2023

30-30 ..... Page 1 ..... 20 Oct 2023
30-30 ..... Page 2 ..... 20 Oct 2023
30-30 ..... Page 3 ..... 20 Oct 2023
30-30 ..... Page 4 ..... 20 Oct 2023
30-30 ..... Page 5 ..... 20 Oct 2023
30-30 ..... Page 6 ..... 20 Oct 2023
30-30 ..... Page 7 ..... 08 Sep 2026
30-30 ..... Page 8 ..... 20 Oct 2023
30-30 ..... Page 9 ..... 20 Oct 2023
30-30 ..... Page 10 ..... 20 Oct 2023
30-30 ..... Page 11 ..... 20 Oct 2023
30-30 ..... Page 12 ..... 20 Oct 2023
30-30 ..... Page 13 ..... 20 Oct 2023
30-30 ..... Page 14 ..... 20 Oct 2023
30-30 ..... Page 15 ..... 08 Sep 2026
30-30 ..... Page 16 ..... 08 Sep 2026
30-30 ..... Page 17 ..... 08 Sep 2026
30-30 ..... Page 18 ..... 08 Sep 2026
30-30 ..... Page 19 ..... 08 Sep 2026
30-30 ..... Page 20 ..... 08 Sep 2026
30-30 ..... Page 21 ..... 08 Sep 2026
30-30 ..... Page 22 ..... 08 Sep 2026
30-30 ..... Page 23 ..... 08 Sep 2026
30-30 ..... Page 24 ..... 08 Sep 2026
30-30 ..... Page 25 ..... 08 Sep 2026
30-30 ..... Page 26 ..... 08 Sep 2026

30-40 ..... Page 1 ..... 16 May 2022
30-40 ..... Page 2 ..... 08 Sep 2026
30-40 ..... Page 3 ..... 08 Sep 2026

30-40 ..... Page 4 ..... 08 Sep 2026
30-40 ..... Page 5 ..... 08 Sep 2026
30-40 ..... Page 6 ..... 08 Sep 2026

30-60 ..... Page 1 ..... 08 Sep 2026
30-60 ..... Page 2 ..... 02 Jan 2020
30-60 ..... Page 3 ..... 02 Jan 2020
30-60 ..... Page 4 ..... 02 Jan 2020
30-60 ..... Page 5 ..... 02 Jan 2020
30-60 ..... Page 6 ..... 02 Jan 2020
30-60 ..... Page 7 ..... 02 Jan 2020
30-60 ..... Page 8 ..... 12 Nov 2025
30-60 ..... Page 9 ..... 12 Nov 2025
30-60 ..... Page 10 ..... 12 Nov 2025
30-60 ..... Page 11 ..... 12 Nov 2025
30-60 ..... Page 12 ..... 12 Nov 2025
30-60 ..... Page 13 ..... 12 Nov 2025
30-60 ..... Page 14 ..... 12 Nov 2025

This Page Intentionally Left Blank

Table of Contents

List of Effective Pages ..... 30-LOEP / Page 1
Table of Contents ..... 30-TOC / Page1

Paragraph **Page Number**

Ice and Rain Protection

1. General ..... 30-00 / Page 1

Airfoil and Engine Inlet

1. Description ..... 30-10 / Page 1
2. Maintenance Practices ..... 30-10 / Page 3
   - A. Leading Edge De-Ice Boots ..... 30-10 / Page 3
   - B. Engine Inlet De-Ice Boot ..... 30-10 / Page 15
   - C. Water Separator ..... 30-10 / Page 23
   - D. In-line Filter ..... 30-10 / Page 23
   - E. Pressure Regulator Valve ..... 30-10 / Page 24
   - F. Ejector Flow Control Valve ..... 30-10 / Page 25
   - G. De-Ice Plumbing Firewall Forward ..... 30-10 / Page 26
   - H. Leading Edge Boots Timer (Only SN: K004-K010 without SB-0035) ..... 30-10 / Page 26
   - I. De-Ice Plumbing Firewall Aft ..... 30-10 / Page 30
   - J. Ice Detector ..... 30-10 / Page 34

Pitot And Stall Prevention Systems

1. Description ..... 30-30 / Page 1
2. Maintenance Practices ..... 30-30 / Page 3
   - A. Pitot and Stall Prevention Heat Electrical Components ..... 30-30 / Page 3
   - B. Supplemental Stall Heaters ..... 30-30 / Page 6
   - C. Pitot and Stall Heat Operational Checks ..... 30-30 / Page 15

Windshield

1. Description ..... 30-40 / Page 1
2. Maintenance Practices ..... 30-40 / Page 1
   - A. Windshield De-Ice Exhaust Manifold 30-40 / Page 1

Propeller

1. Description ..... 30-60 / Page 1
2. Maintenance Practices ..... 30-60 / Page 1
   - A. Brush Block ..... 30-60 / Page 1
   - B. Slip Ring ..... 30-60 / Page 4
   - D. Controller ..... 30-60 / Page 5
   - E. Propeller De-Ice Boots (4 Blade) ..... 30-60 / Page 8
   - F. Propeller De-Ice Boots (5 Blade) ..... 30-60 / Page 10

This Page Intentionally Left Blank

ICE AND RAIN PROTECTION

1. General

This airplane has de-ice systems for the pitot probes, lift transducers, engine inlet, propeller, wings, horizontal stabilizer, and windscreen. All of these systems are manually operated by the pilot or copilot when required.

The pitot probes and lift transducers are electrically heated to prevent ice formation from producing inaccurate performance. The lift transducers also have a supplemental heater installed above the main lift transducer plate.

The engine inlet is protected by an inflatable de-ice boot and an inertial separator. These help prevent the formation of ice on the inlet and inlet screen during flight.

The propeller de-ice system is supplied by Hartzell Propeller, Inc., and uses electrical heating elements encased in blade mounted boots. A timer controls the flow of electricity to the boots which alternately heats then lets them cool. This melts the ice layer after it has formed on the blades letting the ice be thrown off by centrifugal force. The system is a timer and sequencer, electrical slip rings, brush block assembly, and blade mounted boots.

The de-ice system for the wings and horizontal stabilizer is manufactured by B/E Aerospace, Inc., and is created using inflatable channels encased in a fabric and elastomer material (de-icers) that are bonded to the leading edges. Compressed air from the airplane engine is used to inflate the de-icers. Inflation and deflation of the de-icers breaks the interface between the accumulated ice and the wing leading edge. Airflow then carries away the ice.

An advisory optical ice detector probe is installed on the underside of the left wing leading edge. When ice is present on the detector probe, an ICE caution is displayed to advise the pilot of icing conditions and prompt the pilot to turn on the de-ice systems. The ICE caution will remain displayed until the ice clears from the detector probe.

Table 30-00.1: Special Tools

Item	Part Number	Supplier
Scotch-Grip Rubber Adhesive	EC1300L	3M
Solvent	Toluene	Any
Gap Filler Compound	JFM 801 Class B	Deutsche Hutchinson GMBH
Conductive Cement	PN SMR-A56BP, 1/2 Pint PN SMR-A56BQ, 1 Quart	SMR Technologies
Adhesive Remover	Methyl Ethyl Ketone (MEK)	Any
	Peerco 321	Peerless Quality Products
Conductive Cement Sealant	AC 251 B-1/2	3M
Paint Brush, China Bristle, 2” to 3” wide	-	Any
Metal Roller, 1/2” Wide	-	Any
Metal Roller, 1/16” Wide	-	Any
Rubber Roller, 2” Wide	-	Any
Lint-Free Cloth	Hermitex 300 or Similar	DeRoyal Textiles
Carpenter’s Chalk Line	-	Any
Nylon Probe, 1/4" diameter, 8" long (or equivalent), Must be resistant to toluene	-	Any

Figure 30-00.1: De-Ice System Schematic

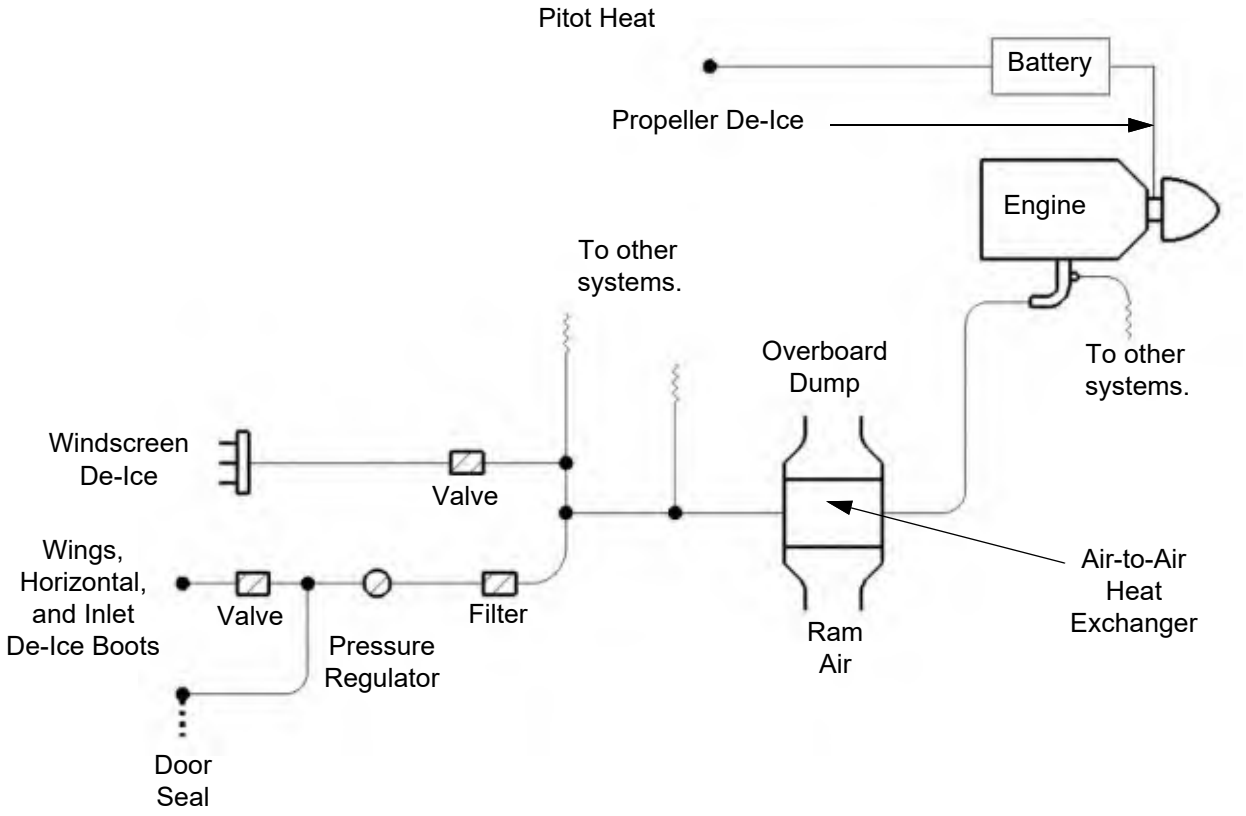

This Page Intentionally Left Blank

AIRFOIL AND ENGINE INLET

1. Description

Black neoprene rubber de-ice boots, made by SMR Technologies, are bonded to the leading edges of the wing, horizontal stabilizer, and engine inlet. Engine P3 bleed air passes through a heat exchanger, water separator, filter, pressure regulator, and ejector valve to the de-ice boots. Normal operation cycles provide bleed air to inflate the de-ice boots, then a venturi in the ejector valve provides a vacuum to deflate and hold the boots tight to the airfoils and engine inlet. A manual on/off switch in the cockpit controls system operation.

The inflation/deflation cycle for the de-ice boots is a total of 60 seconds long: 6 seconds inflated and 54 seconds deflated. Timing logic comes from PFD 1, PFD 2, or the MFD, through the #1 GIA to the timing relay. PFD #1 provides timing logic under normal operation. In the event of a PFD #1 failure, PDF #2, then the MFD provide redundant timing logic.

A pressure switch monitors boot inflation and deflation. The DE-ICE BOOTS FAIL CAS message will illuminate if the boots fail to pressurize or depressurize when expected.

Maintenance on the de-ice boots is limited to patching, cosmetic dressing, and boot replacement.

Lift detectors installed on the leading edge of the wings are electrically heated with internal and supplemental heaters to prevent ice formation, refer to Chapter 30-30.

K003-K085 (excluding K014), refer to the current revision of the E1000 Wiring Manual, P/N SK05000002.

K014, K086 and on, refer to the current revision of the E1000 Wiring Manual, P/N SK05003002.

De-Ice Boot System Simplified Schematic

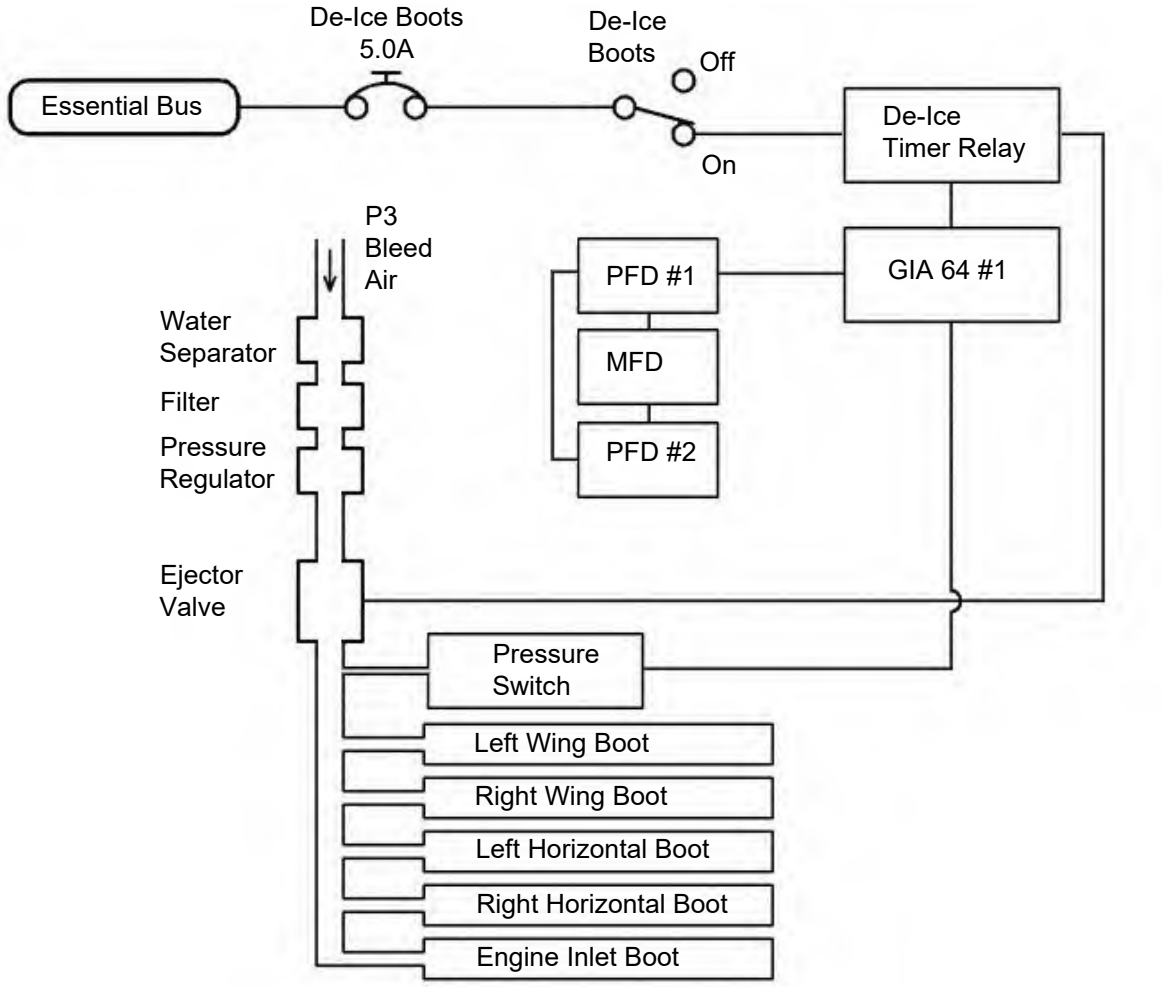

2. Maintenance Practices

A. Leading Edge De-Ice Boots

(1) Safety Precautions

WARNING: Adhesive and solvent vapors are toxic and flammable.

CAUTION: Get the manufacturer's Material Safety Data Sheets (MSDS) for all materials used in these procedures. MSDS supersede this document regarding environmental information as well as handling, application, removal and disposal procedures.

(a) Work on the airplane in a well-ventilated area away from sparks and flames.

(b) Electrically ground the airplane to prevent static sparks that can ignite solvent vapors.

(c) Avoid prolonged breathing of vapors. Excessive exposure may cause dizziness or nausea. Seek fresh air immediately.

(d) Avoid contact with skin or eyes. Use solvent resistant gloves to minimize skin exposure. Use safety glasses to minimize chance of eye contact. If eye contact occurs, flush eyes with water for 15 minutes and get treatment from a physician. If skin contact occurs, wash thoroughly with soap and water.

(e) If swallowed, do not induce vomiting, get treatment from a physician immediately.

(2) Removal

Note: This procedure is typical for wing and horizontal stabilizer de-ice boots. Any differences are noted in the procedure.

(a) Protect painted surfaces of the airplane adjacent to the repair area.

(b) When replacing a wing de-ice boot, do the steps that follow:

(i) On FIKI aircraft, remove the supplemental stall heater (refer to Chapter 31-20).

(ii) Remove the lift transducer (refer to Chapter 31-20).

(iii) Remove the leading edge stall strips and turbulators (refer to Chapter 57-40).

Note: Re-use of the leading edge stall strips and turbulators is not mandatory. If replacing with new, removal is not necessary. If a stall strip or turbulator is damaged during removal, it must be replaced.

(c) Cut the de-ice boot into approximately 2 to 3 inch wide strips parallel to the leading edge of the airfoil.

Note: Use a utility knife with a hook style blade to cut the de-ice boot. Take care not to damage the wing or horizontal leading edge when cutting the de-ice boot.

(d) Peel the de-ice boot away from the leading edge in strips.

(e) Remove the residual adhesive using toluene. Prevent solvent run-off to avoid damage to aircraft paint. Use the minimum amount of solvent and clean up any spills immediately.

(3) Installation

(a) Put the airplane in a climate controlled hangar. Ensure the temperature of the hangar and airplane is between 60°F and 80°F (16°C and 27°C).

(b) Ensure the relative humidity of the hangar is between 0% and 90%.

Note: Increase drying time by 25% when relative humidity is greater than 75%.

(c) Protect painted surfaces of the airplane adjacent to the repair area.

(d) De-Ice Boot Preparation

(i) Dry fit the de-ice boot against the airplane surface to verify the de-ice boot is correct for the airplane. Verify the de-ice boot's total length, total width, air connection location, and cutout locations (if applicable).

(ii) Unroll the de-ice boot on a clean flat surface.

(iii) Apply vacuum to the de-ice boot to remove surface imperfections and ease handling.

(iv) Use a lint-free cloth and toluene to clean the bonding side of the de-ice boot. The surface should be scrubbed lightly to remove dirt and loose particles. Turn or change the cloth often to avoid recontamination of the surface. Do not saturate the surface with toluene.

(v) Let the solvent dry before applying the adhesive

(e) Airfoil Leading Edge Preparation,

(i) Make sure all old adhesive has been removed from the wing.

(ii) Wash the bonding surface of the airplane using isopropyl alcohol.

(iii) Lightly hand sand the bonding surface using 150 grit sandpaper. Remove the surface gloss of the primer or resin, taking care not to cut into the underlying reinforcement fibers of the laminate.

(iv) Remove dust using a vacuum then dry wipe the surface using a clean dry lint free cloth.

(v) Wash the bonding surface of the airplane using isopropyl alcohol then immediately wipe with a clean dry lint free cloth using a single stroke motion while rolling the wipe away from the surface. After each swipe, turn the drying cloth to a clean surface. Do not reuse a contaminated drying cloth surface.

(vi) Verify there is an exposed portion of the lightning strike protection mesh on the aft edge of both the upper and lower portion of the wing or horizontal skin de-ice boot bonding area, as well as the outboard side of the wingtip joggle.

(vii) Define a centerline on the airplane bonding surface. Hold a straight edge or drop line perpendicular to the leading edge surface and mark the point of contact at several points along the leading edge. Connect the points of contact markings using a straight edge and a Sharpie® marker.

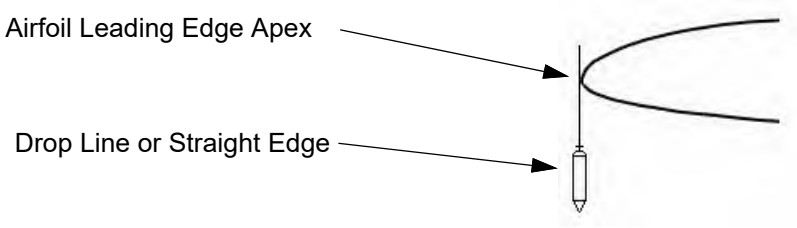

(f) Thoroughly mix 3M EC1300L adhesive. Thinning of the adhesive during mixing using toluene is permitted with a maximum ration of 10 parts adhesive to 1 part toluene by volume.

(g) Using clean scissors, remove approximately 5/8" of bristle length from a new china bristle paint brush to be used for adhesive application.

(h) Apply a coat of the adhesive to the de-ice boot bond surface. Remove any bristles left in the applied adhesive.

(i) Apply a coat of the adhesive to the airplane bond surface. Remove any bristles left in the applied adhesive.

(j) Wait at least one hour for the adhesive to dry on both surfaces.

(k) Connect the centerline marks created in step (vii) using a Sharpie® marker and a straight edge.

(l) Apply a second coat of the bond adhesive to the de-ice boot bond surface.

(m) Apply a second coat of the bond adhesive to the airplane bond surface.

(n) Wait at least one hour for the adhesive to dry on both surfaces.

Note: The prepared de-ice boot may be applied to the airplane up to 48 hours after these procedures are complete. If greater than 48 hours have elapsed since completing bond adhesive application, apply one additional coat of the bond adhesive per the instructions in this section to both the de-ice boot and airplane surface. If greater than five days have elapsed since the completing bond adhesive application, remove all adhesive from both bond surfaces using toluene and re-apply bond adhesive per the instructions in this section.

(o) Apply a minimum vacuum of 15 inHg to the de-ice boot to remove surface imperfections and maintain a flat surface during bonding. The vacuum should be maintained until the de-ice boot is completely installed. Vacuum may be removed during the 48 hour delay period before system check after installation if the air inlet stem is capped.

(p) Activating Adhesive - Use the following procedures whenever activation of the adhesive is required.

(i) Dip the lint-free pad included in the installation kit in toluene then wring out the pad until it is thoroughly moist, but not dripping with excess toluene.

(ii) Wipe the toluene saturated pad lightly over the area to be activated, leaving the area damp with toluene, but not running.

(iii) Let the toluene dry until the activated surface no longer appears damp.

(iv) Tap the activated area with a clean tool or knuckle, and check for any adhesive residue on the tool or knuckle.

(v) If no adhesive has stuck to the tool or knuckle, the activated area is sufficiently prepared for bonding. If the surface is not sufficiently prepared, permit additional drying time and re-check.

(q) Align the air inlet stem with the cutout in the airplane skin and align the boot centerline with the centerline drawn previously on the airplane skin. Centerlines must be aligned ± 0.25 inch along the entire length of the de-ice boot. Ensure the air inlet stem does not contact the airplane skin.

(r) Activate a small region of adhesive adjacent to the air inlet stem then bond the region to the airplane skin.

(s) Bond the centerline of the de-ice boot and the centerline of the airfoil leading edge activated surfaces together by applying pressure with the 2" rubber roller along the entire activated length.

Note: It is important to align the air connection of the de-ice boot with the cutout in the leading edge of the airfoil, as well as the centerline of the de-ice boot. This must be done to ensure correct de-ice boot inflation and deflation and ensure the air connection inlet does not encounter any constrictive interference due to position near the skin of the airplane or from material/objects within the leading edge conduit. The chamfer along the base of the system hose must be fully enveloped by the pass through hole and not contact the edges of the pass through hole. Ensure the boot lies flat before proceeding.

(t) Check the bonded area for trapped air by running your hand over the bonded surface. Remove trapped air as necessary using the following procedures.

(i) Dip one end of a nylon probe into toluene.

(ii) Press the solvent-dipped end of the probe towards the trapped air pocket from an un-installed area.

(iii) Continue to press lightly until the probe works into the trapped air pocket.

(iv) Let the air pocket be open for at least 10 seconds before attempting to roll the de-ice boot down.

(v) Roll the trapped air pocket down using a 2" wide rubber roller starting from the air pocket and rolling towards an un-installed edge.

(u) Repeat steps (s) and (t) until the entire length of the de-ice boot centerline is bonded to the airfoil centerline.

(v) On the upper side of the airfoil, activate a bond area of approximately 4" wide outward from the centerline and 12" - 24" long along the centerline of the de-ice boot, starting at the inboard edge, on both the de-ice boot bond surface and the airplane bond surface.

(w) During activation, keep the surfaces apart to prevent premature bonding while they are drying.

(x) Working from the inboard end of the de-ice boot and outward from the centerline, bond the activated surfaces together by applying pressure using a 2" rubber roller.

Note: Finish each applied section with a swept back angle between the centerline and trailing edge of the de-ice boot. This will make activating the next section easier.

(y) Check the bonded area for trapped air by running your hand over the bonded surface. Remove trapped air as necessary using the previously described air removal procedure.

(z) Fold back the uninstalled portion of the de-ice boot to facilitate activation of the next section of bond line.

(aa) Repeat steps (w) through (z) until all of the de-ice boot from the centerline outward on the upper side of the airfoil is bonded to the airplane.

(ab) On the lower side of the airfoil, activate a bond area of approximately 4" wide outward from the centerline and 12" - 24" long along the centerline of the de-ice boot, starting at the inboard edge, on both the de-ice boot bond surface and the airplane bond surface.

(ac) Do steps (v) through (x) until all of the de-ice boot from the centerline outward on the lower side of the airfoil is bonded to the airplane.

(ad) Using a 1/16" wide metal roller, press the edges of the de-ice boot to the airplane surface along all edges of the boot.

(ae) Check all rolled edges for any peeling or poor bonds/seals.

(af) Using a utility knife with a hook-style blade, trim up to 48" of de-ice boot edge. Use caution to not damage the airplane surfaces or the installed portions of the de-ice boot.

CAUTION: Ensure the trimmed edge of the de-ice boot is 1/2" or greater away from the nearest, outermost stitch line. If the trimmed edge is within 1/2" of the outermost stitch line, the de-ice boot may leak and will have to be replaced.

CAUTION: Ensure the gap between the trimmed edge of the de-ice boot and the adjoining airplane surface is not more than 0.20". If the gap is greater than 0.20", the de-ice boot will have to be replaced.

(ag) Trim the inboard edge of the de-ice boot at the outboard edge of the fairing or the edge of the secondary joggle, whichever is closer. Maintain a maximum 0.10" gap between the edge of the boot and the edge of the trim surface. Do not install the boot under the fairing.

(ah) When replacing a wing de-ice boot, do the steps that follow:

CAUTION: Do not cut outside the inactive area of the de-ice boot. Maintain a gap of 0.125" between the cut and the bladder seam.

(i) Match trim the de-ice boot for the lift transducer to the existing cutouts in the wing skin.

Note: It is recommended to use a sharp pick to find the mounting holes from inside the wing, then temporarily put the lift transducer in position using the mounting screws. Use the edge of the lift transducer plate as a guide to mark the cut out area of the boot.

(ii) Install the lift transducer (refer to Chapter 31-20).

(iii) On aircraft K056 and On, and K003 – K055 with SB-0035, install the supplemental stall heater (refer to Chapter 31-20).

(iv) Install the leading edge stall strips and turbulators (refer to Chapter 57-40).

(ai) If the de-ice boot on the horizontal is being replaced, trim the inboard edge of the de-ice boot at the outboard edge of the fairing. Maintain a maximum 0.10" gap between the edge of the boot and the edge of the fairing. Do not install the boot under the fairing.

(aj) Gap Filler Compound Application

(i) Mask all adjacent airplane surfaces which have exposed lightning strike protection mesh using masking tape.

(ii) Apply PR-1425 B-1/2 gap filler to all gaps between the airplane surfaces and the de-ice boot.

(iii) Using a stir stick or plastic spatula, smooth the applied gap filler to create a flat, smooth transition area between the airplane and the de-ice boot. Remove excess gap filler.

(iv) Let the gap filler cure a minimum of one hour.
(v) Remove the masking tape, if applicable.

(ak) Conductive Cement Application

(i) Mask all adjacent airplane surfaces which have exposed lightning strike protection mesh using masking tape. The masked region should extend at least 1/4” onto both the de-ice boot and adjacent airplane surface. The resulting area should be 1/2” wide.
(ii) Apply 3M AC 137 (Clear or Red) adhesive promoter in accordance with the manufacturer’s instructions. Wait at least 15 minutes for the adhesive promoter to dry.
(iii) Using a china bristle paintbrush of suitable width, apply a continuous single coat of SMR-A56B conductive cement to all required edges.
(iv) Remove the adjacent masking tape immediately after application of conductive cement.
(v) Let the conductive cement fully cure (refer to the manufacturer's instructions).
(vi) Using a multimeter, check the electrical continuity between the de-ice boot and the adjacent airplane surface. If not conductive, apply an additional coat of conductive cement.

(al) Conductive Cement Sealant

(i) Mask off the area previously masked for application of conductive cement using masking tape.
(ii) Apply PR-1425 B-1/2 gap filler to the masked area.
(iii) Using a stir stick or plastic spatula, smooth and flatten the applied gap filler along the entire applied length. Ensure the maximum height of the filler above the sealed surfaces is 0.030".
(iv) Remove the masking tape.
(v) Let the gap filler and the de-ice boot cure a minimum of 48 hours.

(4) Adhesive Disbonding

Any visible wrinkles, creases, or other surface imperfections caused by an accidental or undesirable bond during de-ice boot installation can be corrected using the following procedure. This procedure may be used at any point during bonding, unless components have been bonded for more than 24 hours.

CAUTION: The de-ice boot and airplane are likely to be damaged if disbonding is attempted after more than 24 hours have elapsed since initial bonding.

(a) Use a squirt bottle to apply a minimal amount of toluene to the bond line, while applying a light peel load to the de-ice boot.
(b) Peel the de-ice boot back until an increase in resistance is encountered. Do not stretch the boot.
(c) Repeat steps (a) and (b) until the accidental or undesirable bond is removed.

(d) Reapply adhesive in the disbonded region.

(e) Reactivate the newly applied adhesive.

(f) Continue with the de-ice boot bonding operation which was interrupted by the accidental or undesirable bond.

(5) System Check After Installation

(a) Verify the de-ice boot installation has cured a minimum of 48 hours.

(b) Inspect the installed de-ice boots for cuts, tears, abrasion, scuffs, or crazing.

(c) Inflate the de-ice boot to 21 +/-2 psi using a regulated air source.

(d) Verify that inflation time of the de-ice boot is 6 seconds or less. Do the inflation test three times.

(e) Inflate the de-ice boot to 21 +/-2 psi using a regulated air source, then seal it off at the air connection point.

(f) Monitor the internal pressure of the de-ice boot for 60 seconds. If pressure drop exceeds 3 psi, locate and repair the leak.

(g) Unseal the de-ice boot at the air connection and let it deflate naturally. If deflation time exceeds 22 seconds, find and remove the airway obstruction(s).

(h) If the de-ice boot cannot be sufficiently repaired to meet the criteria in this section, remove and replace the de-ice boot.

(i) Let the bond on a correctly and successfully installed de-ice boot cure a minimum of 72 hours after the initial curing time of 48 hours.

CAUTION: Failure to correctly cure the de-ice boot adhesive bond may result in failure of the bond during flight.

(6) Inspection/Check

(a) Visually inspect the de-ice boots for cuts, tears, abrasion, scuffs, or crazing.

(b) Remove the top cowl (refer to Chapter 71-10).

(c) Connect a dry compressed air source, regulated to 50 psi, to the input side of the water separator.

(d) Connect external power to the airplane (refer to Chapter 24-40).

(e) Set the BATT 1 and BATT 2 switches to ON.

(f) Set the DE-ICE BOOT switch to ON.

(g) The de-ice boot cycle is 60 seconds. Make sure the inflation time of the de-ice boot is 6 seconds or less. If deflation time exceeds 22 seconds, inspect the plumbing for obstructions

(h) While the de-ice boots cycle, inspect them for leaks.

Note: If the de-ice boot cannot be sufficiently repaired to meet the criteria in this section, remove and replace the de-ice boot.

(i) Set the BATT 1 and BATT 2 switches to OFF.

(j) Remove all external electrical power to the airplane (refer to Chapter 24-40).

(k) Disconnect the compressed air source and reconnect the supply line to the water separator.

(l) Install the top cowl (refer to Chapter 71-10).

(7) Repair the de-ice boots using the materials given by the Iceshield Repair Kit (PN 2MA1419-01).

Patch repair limitations:

- Any patch repair that will affect the turbulator triangles or the stall strips is not permissible and will require immediate de-ice boot replacement.
- Cut, tear, or rupture exceeding 3/4” in width will require de-ice boot replacement. Temporary patching is permissible.
- Cut, tear, or rupture within 1/8” of a stitch line will require de-ice boot replacement. Temporary patching is permissible.
- Cut, tear, or rupture that extends into the fabric stitch line will require immediate de-ice boot replacement.

Limits for application of patches for a de-ice boot.

- Three small patches (1-1/4” x 2-1/2”) per any 12 in^2 area.
- Two medium patches (2-1/2” x 5”) per any 12 in^2 area.
- One (1) large patch (5” x 10”) per any 12 in^2 area.

CAUTION: Patches have <u>one-way stretch</u> across the <u>width</u> of the patch so that the patch will stretch as the de-ice boot is inflated. The patch must be installed with the length parallel to the de-ice boot tubes. Failure to do so may result in the patch lifting when the de-ice boot is inflated.

CAUTION: Patch adhesive is temperature sensitive. For best results if temperature is less than 50°F, warm the de-ice boot surface before applying primer and warm the installed patch while drying. To warm, hold a plastic bag filled with hot water on the de-ice boot surface installed patch. The patch may not adhere if the de-ice boot surface and installed patch are not warmed.

Note: The patch must extend 1/2” minimum distance beyond the damaged area and may be trimmed for small areas.

(a) Patching

(i) Clean the de-ice boot surface to be patched with hot water and detergent using a clean cloth to remove dirt, grease and silicone coatings.

(ii) Sand the de-ice boot surface using medium grit emery cloth or equivalent. Make a patch template to outline the damaged area and also to be used as a shield during sanding.

(iii) Wipe the de-ice boot surface using a clean cloth dampened with cleaning solvent (toluene or isopropyl alcohol) then let it to dry.

(iv) Apply one coat of primer to the de-ice boot surface and let it dry to touch (5 to 10 minutes).

(v) Remove the paper backing from the patch then center the patch over the outlined primer area on the de-ice boot surface. Roll the patch firmly with a rubber roller.

(vi) Let the patch cure a minimum of 30 minutes before inflating the de-ice boot.

(b) Patch Replacement

(i) Remove the old patch from the de-ice boot surface.

(ii) Remove residual adhesive using isopropyl alcohol and a fine/medium grade buffing pad.

(iii) Apply a new patch.

Figure 30-10.1: Airfoil De-Ice Boots (Sheet 1 of 2)

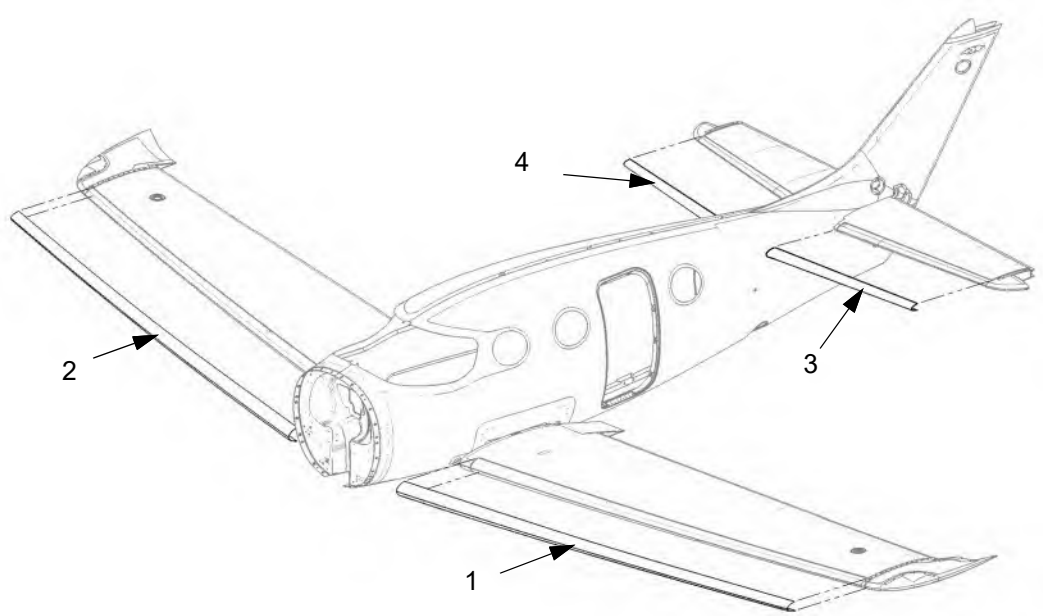

LEGEND

1. De-ice Boot, Left Wing
2. De-ice Boot, Right Wing
3. De-ice Boot, Left Horizontal
4. De-ice Boot, Right Horizontal

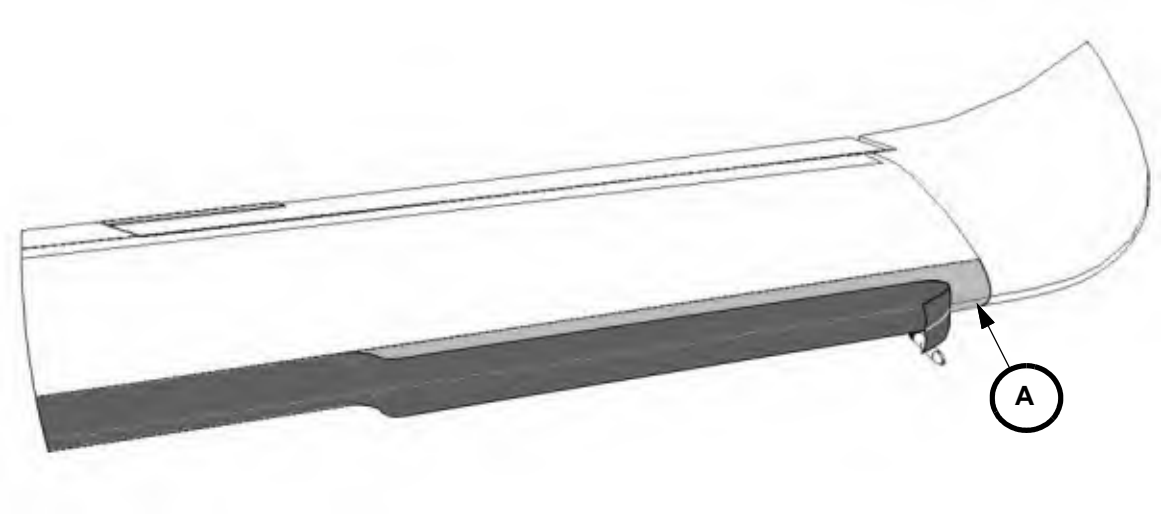

Left wing shown, right wing and left and right horizontal stabilizers are similar.

Figure 30-10.1: Airfoil De-Ice Boots (Sheet 2 of 2)

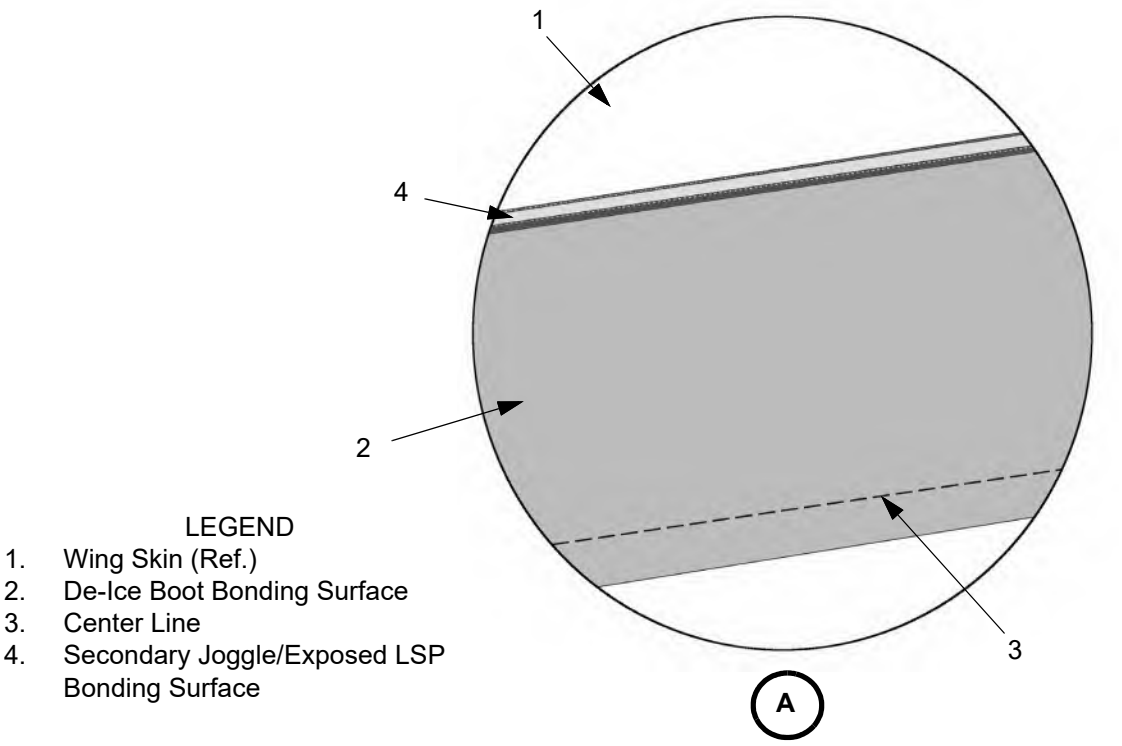

LEGEND

1. Wing Skin (Ref.)
2. De-Ice Boot Bonding Surface
3. Center Line
4. Secondary Joggle/Exposed LSP Bonding Surface

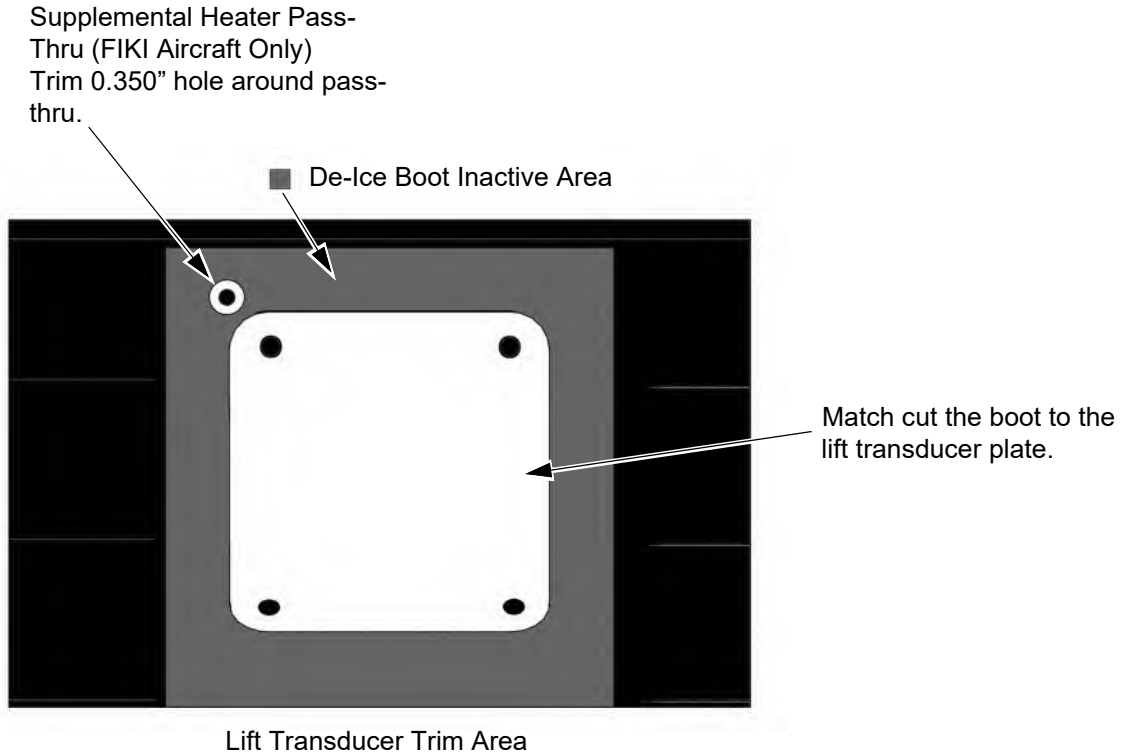

Lift Transducer Trim Area

Left wing shown, right wing opposite.

B. Engine Inlet De-Ice Boot

(1) Safety Precautions

WARNING: Adhesive and solvent vapors are toxic and flammable.

CAUTION: Get the manufacturer's Material Safety Data Sheets (MSDS) for all materials used in these procedures. MSDS's supercede this document regarding environmental information as well as handling, application, removal and disposal procedures.

(a) Work on the airplane in a well-ventilated area away from sparks and flames.

(b) Electrically ground the airplane to prevent static sparks that can ignite solvent vapors.

(c) Avoid prolonged breathing of vapors. Excessive exposure may cause dizziness or nausea. Seek fresh air immediately.

(d) Avoid contact with skin or eyes. Use solvent resistant gloves to minimize skin exposure. Use safety glasses to minimize chance of eye contact. If eye contact occurs, flush eyes with water for 15 minutes and get treatment from a physician. If skin contact occurs, wash thoroughly with soap and water.

(e) If swallowed, do not induce vomiting; get treatment from a physician immediately.

(2) Removal

(a) Remove the lower cowling (refer to Chapter 71-10).

(b) Remove the engine inlet lip from the lower cowling, (refer to Chapter 71-10.)

(c) Cut the de-ice boot into strips

Note: Use a utility knife with a hook style blade to cut the de-ice boot. Take care not to damage the engine inlet lip when cutting the de-ice boot.

(d) Peel the de-ice boot away from the engine inlet in strips.

(e) Remove the residual adhesive using toluene.

(3) Installation

Note: Make sure the temperature is between 60°F and 80°F (16°C and 27°C) and the relative humidity of the hangar is between 0% and 90%.

Note: Increase drying time by 25% when relative humidity is greater than 75%.

(a) De-Ice Boot Preparation

(i) Dry fit the de-ice boot against the engine inlet lip to verify the de-ice boot is correct for the airplane. Verify the air connection location.

(ii) Put the de-ice boot on a clean flat surface.

(iii) Apply vacuum to the de-ice boot to remove surface imperfections and ease handling.

(iv) Use a lint-free cloth and toluene to clean the bonding side of the de-ice boot. The surface should be scrubbed lightly to remove dirt and loose particles. Turn or change the cloth often to avoid recontamination of the surface. Do not saturate the surface with toluene.

(v) Let the solvent dry before applying the adhesive

(b) Engine Inlet Lip Preparation,

(i) Make sure all old adhesive has been removed from the inlet lip.

(ii) Wash the bonding surface of the lip using isopropyl alcohol.

(iii) Lightly hand sand the bonding surface using 150 grit sandpaper. Remove the surface gloss of the primer or resin, taking care not to cut into the underlying reinforcement fibers of the laminate.

(iv) Remove dust using a vacuum then dry wipe the surface using a clean dry lint free cloth.

(v) Wash the bonding surface of the lip using isopropyl alcohol then immediately wipe with a clean dry lint free cloth using a single stroke motion while rolling the wipe away from the surface. After each swipe, turn the drying cloth to a clean surface. Do not reuse a contaminated drying cloth surface.

(c) Using a Sharpie® marker:

(i) Mark the leading edge centerline on the inlet lip.

Note: The leading edge centerline of the boot is marked from the manufacturer.

(ii) Mark the center cord centerlines on the upper and lower lip of the boot and inlet lip.

(d) Thoroughly mix 3M EC1300L adhesive. Thinning of the adhesive during mixing using toluene is permitted with a maximum ration of 10 parts adhesive to 1 part toluene by volume.

(e) Using clean scissors, remove approximately 5/8" of bristle length from a new china bristle paint brush to be used for adhesive application.

(f) Apply a coat of the adhesive to the de-ice boot bond surface. Remove any bristles left in the applied adhesive.

(g) Apply a coat of the adhesive to the engine lip bond surface. Remove any bristles left in the applied adhesive.

(h) Wait at least one hour for the adhesive to dry on both surfaces.

(i) Apply a second coat of the bond adhesive to the de-ice boot bond surface.

(j) Apply a second coat of the bond adhesive to the engine lip bond surface.

(k) Wait at least one hour for the adhesive to dry on both surfaces.

(l) Apply a minimum vacuum of 15 inHg to the de-ice boot to remove surface imperfections and maintain a flat surface during bonding. The vacuum should be maintained until the de-ice boot is completely installed.

Note: Vacuum may be removed during the 48 hour delay period before system check after installation if the air inlet stem is capped.

(m) Activating Adhesive - Use the following procedures whenever activation of the adhesive is required.

(i) Dip the lint-free pad included in the installation kit in toluene then wring out the pad until it is thoroughly moist, but not dripping with excess toluene.

(ii) Wipe the toluene saturated pad lightly over the area to be activated, leaving the area damp with toluene, but not running.

(iii) Let the toluene dry until the activated surface no longer appears damp.

(iv) Tap the activated area with a clean tool or knuckle, and check for any adhesive residue on the tool or knuckle.

(v) If no adhesive has stuck to the tool or knuckle, the activated area is sufficiently prepared for bonding. If the surface is not sufficiently prepared, permit additional drying time and re-check.

(n) Tack down the centerline as follows:

(i) Activate a small section (approximately 1” x 1”) on the inlet lip and boot at the centerline closest to the air connection. Adhere these sections together.

(ii) Activate another small section on the centerline opposite the air connection and adhere.

(iii) Repeat the process on the left and right sides of the inlet lip. This should be done in the upper left/right corners of the lip where the part radius is the smallest.

Note: Tacking down the boot in this step will create 4 quadrants.

(o) Activate and adhere one quadrant at a time starting at the centerline. Activate approximately a 0.5 inch wide section at a time.

(i) Adhere the inner section of the inlet lip one quadrant at a time.

(ii) Adhere the outer section of the inlet lip one quadrant at a time.

(p) Check the bonded area for trapped air by running your hand over the bonded surface. Remove trapped air as necessary using the following procedures.

(i) Dip one end of a nylon probe into toluene.

(ii) Press the solvent-dipped end of the probe towards the trapped air pocket from an uninstalled area.

(iii) Continue to press lightly until the probe works into the trapped air pocket.

(iv) Let the air pocket be open for at least 10 seconds before attempting to roll the de-ice boot down.

(v) Roll the trapped air pocket down using a 2" wide rubber roller starting from the air pocket and rolling towards an uninstalled edge.

(q) Adhesive Debonding

Any visible wrinkles, creases, or other surface imperfections caused by an accidental or undesirable bond during de-ice boot installation can be corrected using the following procedure. This procedure may be used at any point during bonding, unless components have been bonded for more than 24 hours.

CAUTION: The de-ice boot and airplane are likely to be damaged if debonding is attempted after more than 24 hours have elapsed since initial bonding.

(i) Use a squirt bottle to apply a minimal amount of toluene to the bond line, while applying a light peel load to the de-ice boot.

(ii) Peel the de-ice boot back until an increase in resistance is encountered. Do not stretch the boot.

(iii) Repeat steps (i) and (ii) until the accidental or undesirable bond is removed.

(iv) Reapply adhesive in the debonded region.

(v) Reactivate the newly applied adhesive.

(vi) Continue with the de-ice boot bonding operation which was interrupted by the accidental or undesirable bond.

(r) Using a 1/16" wide metal roller, press the edges of the de-ice boot to the airplane surface along all edges of the boot.

(s) Remove the vacuum from the boot.

CAUTION: Use caution to not damage the inlet lip or the installed portions of the de-ice boot when trimming the boot.

(t) Using a utility knife with a hook-style blade, trim the edge of de-ice boot flush (+/- 0.01”) to the edge of the inlet lip.

(u) Apply a bead of PR-1425 B-1/2 or B-2 sealant around the periphery of the air inlet stem. Smooth the sealant flush to the edge of the inlet cutout.

(v) Finish the edges of the boot with a thin bead of PR-1425 B-1/2 or B-2 sealant.

(4) System Check After Installation:

CAUTION: Wait at least 48 hours after installation before inflating the de-ice boot to allow for proper bonding.

(a) Inspect the installed de-ice boot for cuts, tears, abrasion, scuffs, or crazing.

(b) Inflate the de-ice boot to 21 +/-2 psi using a regulated air source.

(c) Verify that inflation time of the de-ice boot is 6 seconds or less. Do the inflation test three times.

(d) Inflate the de-ice boot to 21 +/-2 psi using a regulated air source, then seal it off at the air connection point.

(e) Monitor the internal pressure of the de-ice boot for 60 seconds. If pressure drop exceeds 3 psi, locate and repair the leak.

(f) Unseal the de-ice boot at the air connection and let it deflate naturally. If deflation time exceeds 22 seconds, find and remove any airway obstructions.

(g) If the de-ice boot cannot be sufficiently repaired to meet the criteria in this section, remove and replace the de-ice boot.

(h) Let the bond on a correctly and successfully installed de-ice boot cure a minimum of 72 hours after the initial curing time of 48 hours.

CAUTION: Failure to correctly cure the de-ice boot adhesive bond may result in failure of the bond during flight.

(i) Install the engine inlet lip on the lower cowling, (refer to Chapter 71-10.)

(j) Install the lower cowling (refer to Chapter 71-10).

(5) Inspection

(a) Visually inspect the de-ice boot for cuts, tears, abrasion, scuffs, or crazing.

(b) Remove the top cowl (refer to Chapter 71-10).

(c) Connect a dry compressed air source, regulated to 50 psi, to the input side of the water separator.

(d) Connect external power to the airplane (refer to Chapter 24-40).

(e) Set the BATT 1 and BATT 2 switches to ON.

(f) Set the DE-ICE BOOT switch to ON.

(g) The de-ice boot cycle is 60 seconds. Make sure the inflation time of the de-ice boot is 6 seconds or less. If deflation time exceeds 22 seconds, inspect the plumbing for obstructions

(h) While the de-ice boot cycles, inspect it for leaks.

Note: If the de-ice boot cannot be sufficiently repaired to meet the criteria in this section, remove and replace the de-ice boot.

(i) Set the BATT 1 and BATT 2 switches to OFF.

(j) Remove external electrical power to the airplane (refer to Chapter 24-40).

(k) Disconnect the compressed air source and reconnect the supply line to the water separator.

(l) Install the top cowl (refer to Chapter 71-10).

(6) Repair the de-ice boot using the materials given by the Iceshield Repair Kit (PN 2MA1419-01).

Patch repairs are not recommended for the following damage:

- Cut, tear, or rupture exceeding 3/4” in width. Temporary patching is permissible.
- Cut, tear, or rupture within 1/8” of a stitch line (on sewn de-ice boot). Temporary patching is permissible.
- Cut, tear, or rupture that extends into the fabric stitch line will require immediate de-ice boot replacement.

Limits for application of patches for a de-ice boot.

- Three small patches (1-1/4” x 2-1/2”) per any 12 in^2 area.
- Two medium patches (2-1/2” x 5”) per any 12 in^2 area.
- One (1) large patch (5” x 10”) per any 12 in^2 area.

CAUTION: Patches have <u>one-way stretch</u> across the <u>width</u> of the patch so that the patch will stretch as the de-ice boot is inflated. The patch must be installed with the length parallel to the de-ice boot tubes. Failure to do so may result in the patch lifting when the de-ice boot is inflated.

CAUTION: Patch adhesive is temperature sensitive. For best results if temperature is less than 50°F, warm the de-ice boot surface before applying primer and warm the installed patch while drying. To warm, hold a plastic bag filled with hot water on the de-ice boot surface installed patch. The patch may not adhere if the de-ice boot surface and installed patch are not warmed.

Note: The patch must extend 1/2” minimum distance beyond the damaged area and may be trimmed for small areas.

(a) Patching

(i) Clean the de-ice boot surface to be patched with hot water and detergent using a clean cloth to remove dirt, grease and silicone coatings.

(ii) Sand the de-ice boot surface using medium grit emery cloth or equivalent. Make a patch template to outline the damaged area and also to be used as a shield during sanding.

(iii) Wipe the de-ice boot surface using a clean cloth dampened with cleaning solvent (toluene or isopropyl alcohol) then let it to dry.

(iv) Apply one coat of primer to the de-ice boot surface and let it dry to touch (5 to 10 minutes).

(v) Remove the paper backing from the patch then center the patch over the outlined primer area on the de-ice boot surface. Roll the patch firmly with a rubber roller.

(vi) Let the patch cure a minimum of 30 minutes before inflating the de-ice boot.

(b) Patch Replacement

(i) Remove the old patch from the de-ice boot surface.

(ii) Remove residual adhesive using isopropyl alcohol and a fine/medium grade buffing pad.

(iii) Apply a new patch.

Figure 30-10.2: Engine Inlet De-Ice Boot

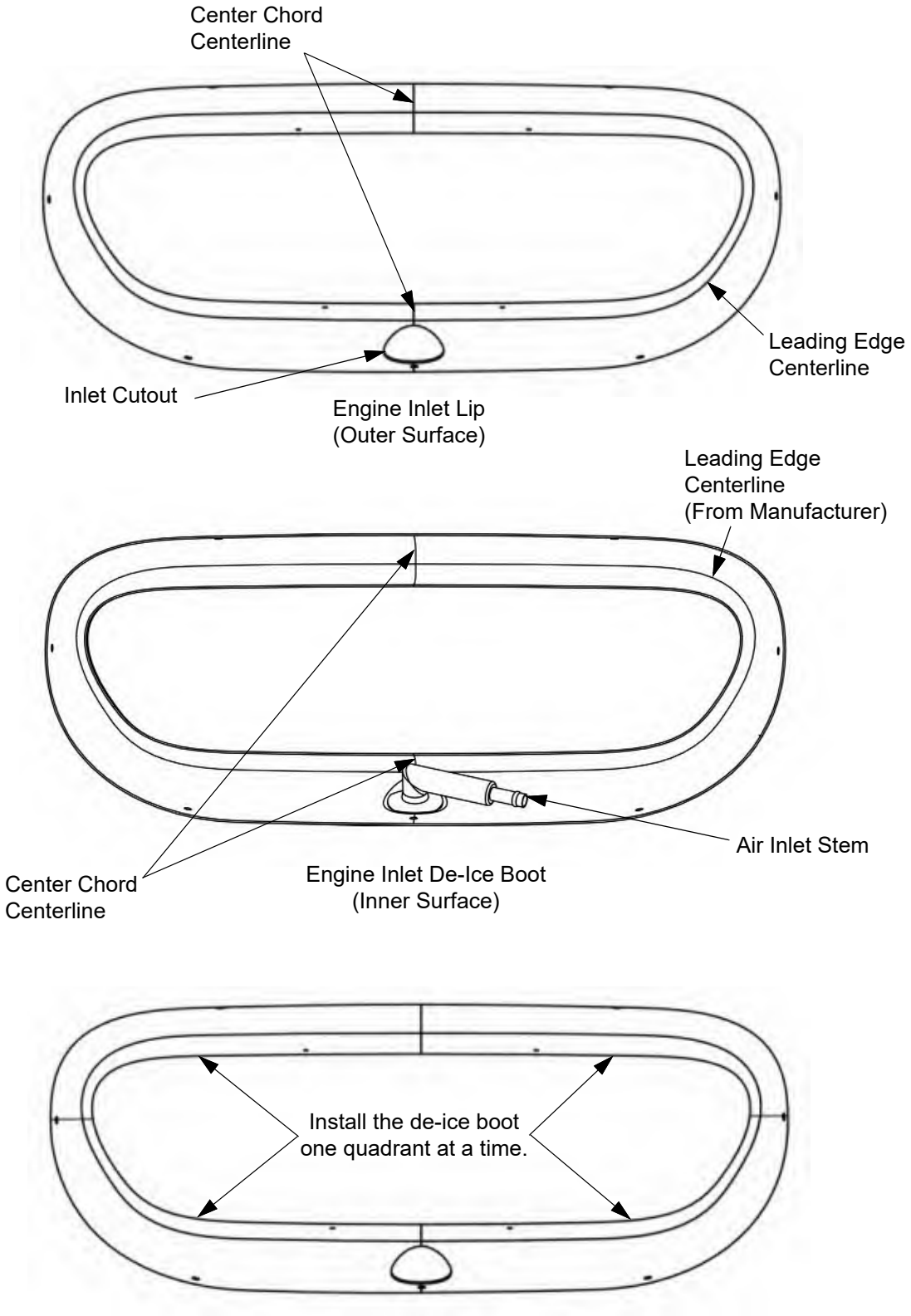

C. Water Separator

(1) Removal

(a) Set the BATT 1 and BATT 2 switches to OFF.

(b) Remove all external electrical power to the airplane (refer to Chapter 24-40).

(c) Remove the cowling (refer to Chapter 71-10).

(d) Disconnect the wiring harness.

(e) Disconnect the inlet hose to the water separator.

(f) Remove the two bolts and washers attaching the water separator to the mounting bracket.

(g) Loosen the hose clamp attaching the water separator outlet fitting to the de-ice pressurization assembly.

(h) Remove the water separator.

(i) Cap or plug all open connections and fittings to keep contamination out of the system.

(j) Remove the inlet and outlet fittings, as necessary.

(2) Installation

(a) Install the inlet and outlet fittings to the water separator, as necessary. Tighten pipe thread fittings 1/2 to 2 turns beyond hand tight.

Note: Seal all pipe threads using Loctite™ 567 or anti-seize PTFE tape conforming to A-A-58092-2-2.

(b) Position the water separator so the flow direction marked on the separator matches the flow direction marked on the mounting bracket.

(c) Insert the water separator outlet fitting into the hose connected to the in-line filter.

(d) Attach the water separator to the mounting bracket using two bolts and washers. Safety wire the bolts.

(e) Connect the inlet hose.

(f) Tighten the hose clamp at the water separator outlet fitting. Torque the hose clamps 15 to 25 in-lbs.

(g) Connect the wiring harness.

(h) Test the de-ice system for correct operation and inspect the water separator for security and leaks. Refer to Chapter 30-10.A.(5).

(i) Install the cowling (refer to Chapter 71-10).

D. In-line Filter

(1) Removal

(a) Set the BATT 1 and BATT 2 switches to OFF.

(b) Remove all external electrical power to the airplane (refer to Chapter 24-40).

(c) Remove the cowling (refer to Chapter 71-10).

(d) Disconnect the wiring harness.

(e) Remove the two bolts, four washers, and two locknuts attaching the ejector control valve to the mounting rail.

(f) Remove the two bolts, four washers, and two locknuts attaching the pressure regulator valve to the mounting rail.

(g) Loosen the hose clamps attaching the inlet and outlet ports of the in-line filter to the de-ice pressurization assembly.

(h) Loosen the loop clamp attaching the in-line valve to the mounting rail.

(i) Disconnect the hoses from the inlet and outlet of the in-line filter then remove the filter.

(j) Cap or plug all open connections and fittings to keep contamination out of the system.

(2) Installation

(a) Slide the in-line filter into the loop clamp that attaches the filter to the mounting rail.

(b) Attach the hose from the water separator outlet to the inlet of the in-line filter.

(c) Attach the hose from the outlet of the in-line filter to the inlet of the pressure regulator.

(d) Tighten the hose clamps. Torque the hose clamps 15 to 25 in-lbs.

(e) Install the bolts, washers, and locknuts attaching the pressure regulator to the mounting rail.

(f) Install the bolts, washers, and locknuts attaching the ejector control valve to the mounting rail.

(g) Connect the wiring harness.

(h) Test the de-ice system for correct operation and inspect the in-line filter for security and leaks. Refer to Chapter 30-10.A.(5).

(i) Install the cowling (refer to Chapter 71-10).

E. Pressure Regulator Valve

(1) Removal

(a) Set the BATT 1 and BATT 2 switches to OFF.

(b) Remove all external electrical power to the airplane (refer to Chapter 24-40).

(c) Remove the cowling (refer to Chapter 71-10).

(d) Disconnect the wiring harness.

(e) Remove the two bolts, four washers, and two locknuts attaching the ejector control valve to the mounting rail.

(f) Remove the two bolts, four washers, and two locknuts attaching the pressure regulator valve to the mounting rail.

(g) Loosen the hose clamps securing the inlet and outlet ports of the pressure regulator valve to the de-ice pressurization assembly.

(h) Remove the pressure regulator.

(i) Cap or plug all open connections and fittings to keep contamination out of the de-ice system.

(2) Installation

(a) Attach the hose from the outlet of the in-line filter to the inlet of the pressure regulator valve.

(b) Attach the hose from the ejector valve to the outlet of the pressure regulator valve.

(c) Install the bolts, washers, and locknuts attaching the pressure regulator to the mounting rail.

(d) Install the bolts, washers, and locknuts attaching the ejector control valve to the mounting rail.

(e) Tighten the hose clamps. Torque the hose clamps 15 to 25 in-lbs.

(f) Connect the wiring harness.

(g) Test the de-ice system for correct operation and inspect the pressure regulator valve for security and leaks. Refer to Chapter 30-10.A.(5).

(h) Install the cowling (refer to Chapter 71-10).

F. Ejector Flow Control Valve

(1) Removal

(a) Set the BATT 1 and BATT 2 switches to OFF.

(b) Remove all external electrical power to the airplane (refer to Chapter 24-40).

(c) Remove the cowling (refer to Chapter 71-10).

(d) Disconnect the wiring harness.

(e) Disconnect the hose connecting the ejector valve to the firewall.

(f) Remove the two bolts, four washers, and two locknuts attaching the ejector control valve to the mounting rail.

(g) Disconnect the ejector valve from the hose to the pressure regulator valve outlet then remove the ejector valve.

(h) Cap or plug all open connections and fittings to keep contamination out of the system.

(2) Installation

(a) Attach the hose from the outlet of the pressure regulator valve to the ejector valve.

Note: Seal all pipe threads using Loctite™ 567 or anti-seize PTFE tape conforming to A-A-58092-2-2.

(b) Attach the hose from the firewall to the ejector valve.

(c) Install the bolts, washers, and locknuts attaching the ejector control valve to the mounting rail.

(d) Connect the wiring harness.

(e) Test the de-ice system for correct operation and inspect the ejector valve for security and leaks. Refer to Chapter 30-10.A.(5).

(f) Install the cowling (refer to Chapter 71-10).

G. De-Ice Plumbing Firewall Forward

(1) Removal

(a) Set the BATT 1 and BATT 2 switches to OFF.

(b) Remove all external electrical power to the airplane (refer to Chapter 24-40).

(c) Remove the cowling (refer to Chapter 71-10).

(d) Unfasten any clamps securing the hose to be removed.

(e) Remove the hose.

(f) Cap or plug all open connections to keep contamination out of the system.

(2) Installation

(a) Install the hose. Torque the hose clamps 15 to 25 in-lbs.

Note: Seal all pipe threads using Loctite™ 567 or anti-seize PTFE tape conforming to A-A-58092-2-2.

(b) Test the de-ice system for correct operation and inspect the hoses and fittings for security and leaks. Refer to Chapter 30-10.A.(5).

(c) Install the cowling (refer to Chapter 71-10).

H. Leading Edge Boots Timer (Only SN: K004-K010 without SB-0035)

(1) Removal

(a) Set the BATT 1 and BATT 2 switches to OFF.

(b) Remove all external electrical power to the airplane (refer to Chapter 24-40).

(c) Remove PFD 1 (refer to Chapter 34-40).

(d) Disconnect the wiring harness from the timer.

(e) Remove the socket head screws and washers attaching the timer bracket to the instrument panel then remove the timer and bracket.

(f) Remove the screws attaching the timer to the mounting bracket.

(2) Installation

(a) Attach the timer to the mounting bracket using four screws

(b) Connect the wiring harness.

(c) Attach the timer and mounting bracket to the instrument panel using two socket head screws and washers.

(d) Install PFD 1 (refer to Chapter 34-40).

(e) Test the de-ice system for correct operation.

Figure 30-10.3: De-Ice Pressurization System (Sheet 1 of 3)

LEGEND

1. Water Separator
2. In-Line Filter
3. Pressure Regulator Valve
4. Ejector Valve
5. Bracket
6. Hose
7. Hose (Water Separator to Manifold)
8. Hose (Ejector to Firewall)
9. Clamp
10. Fitting
11. Bolt
12. Washer

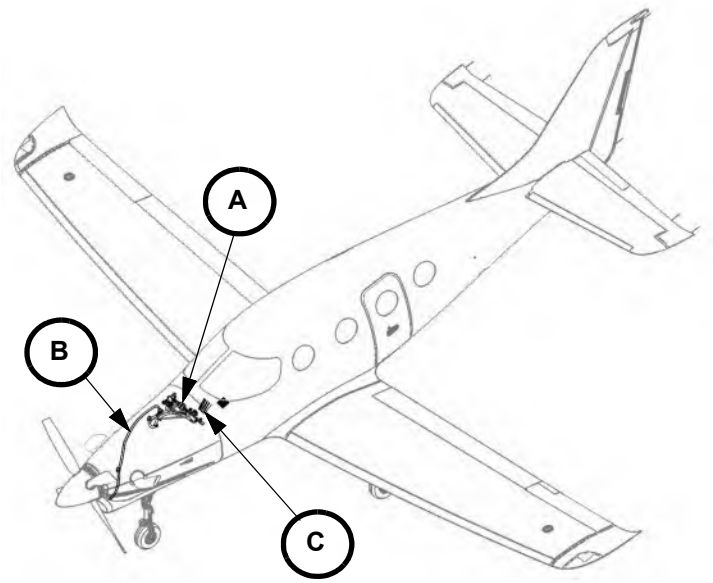

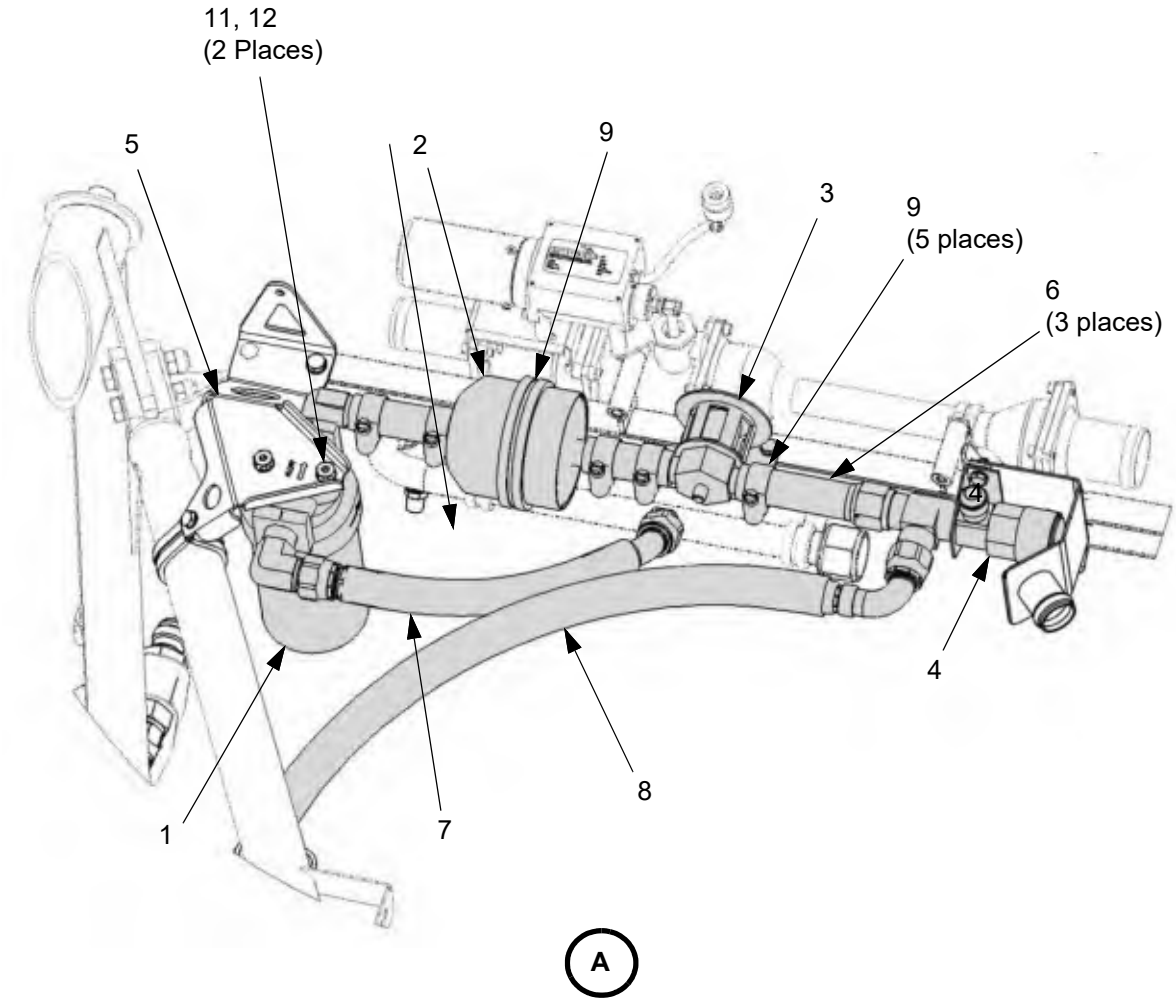

Figure 30-10.3: De-Ice Pressurization System (Sheet 2 of 3)

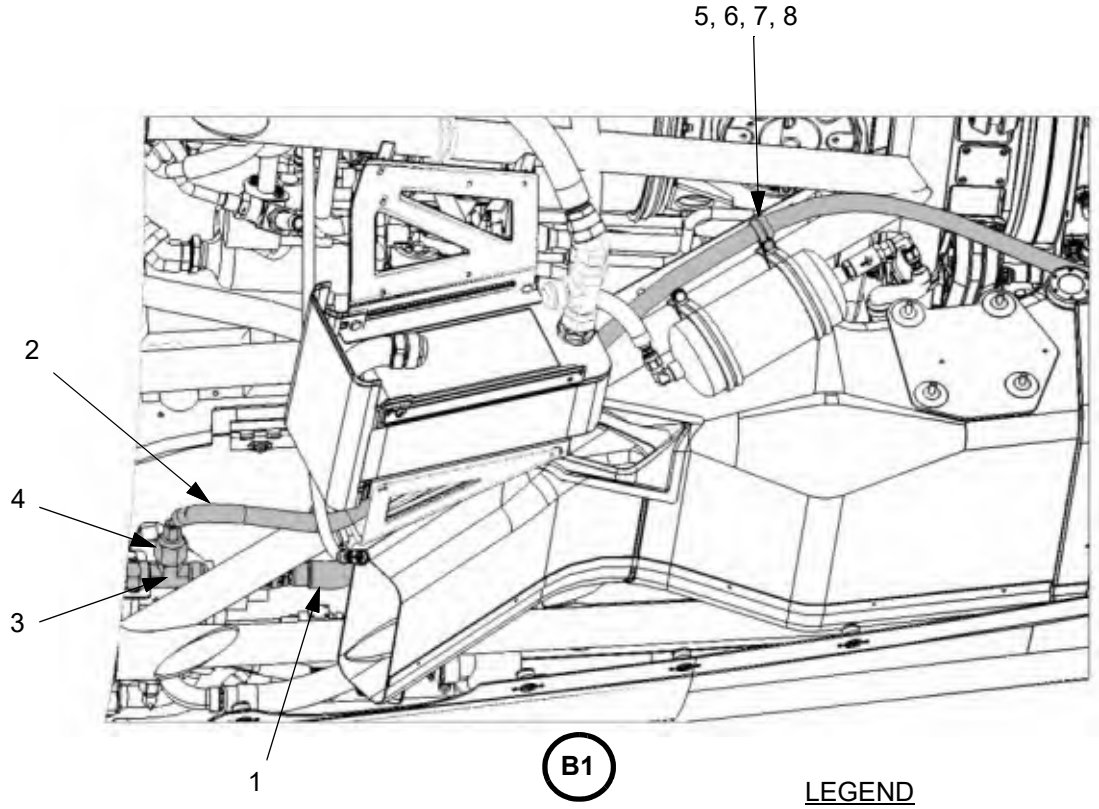

LEGEND

1. Hose (Ejector to Firewall)
2. Hose (Inlet De-Ice)
3. Fitting
4. Reducer
5. Clamp
6. Bolt
7. Washer
8. Nut
9. Pipe to Hose Fitting
10. Pipe to Flare Fitting

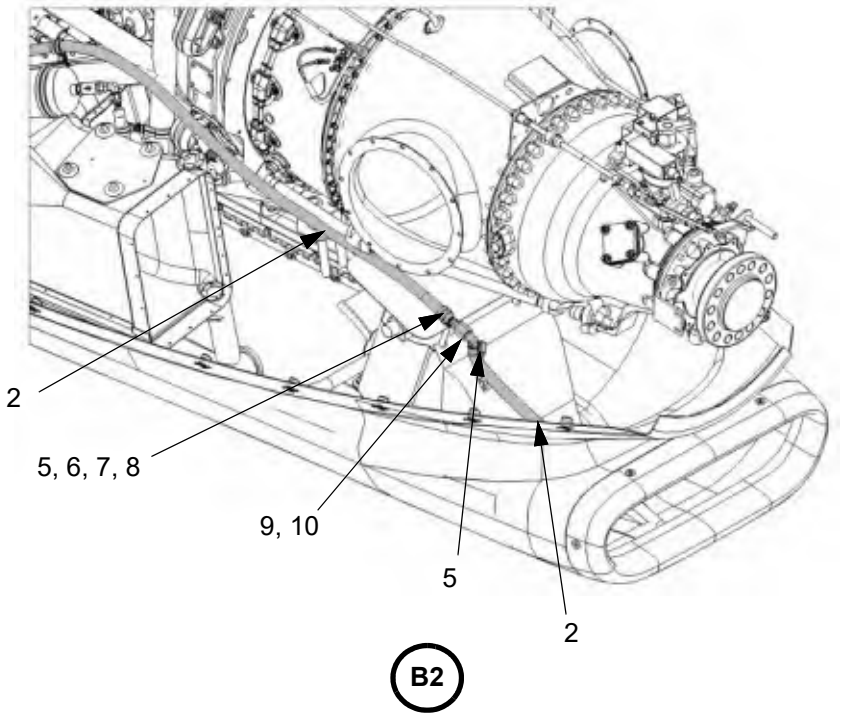

Figure 30-10.3: De-Ice Pressurization System (Sheet 3 of 3)

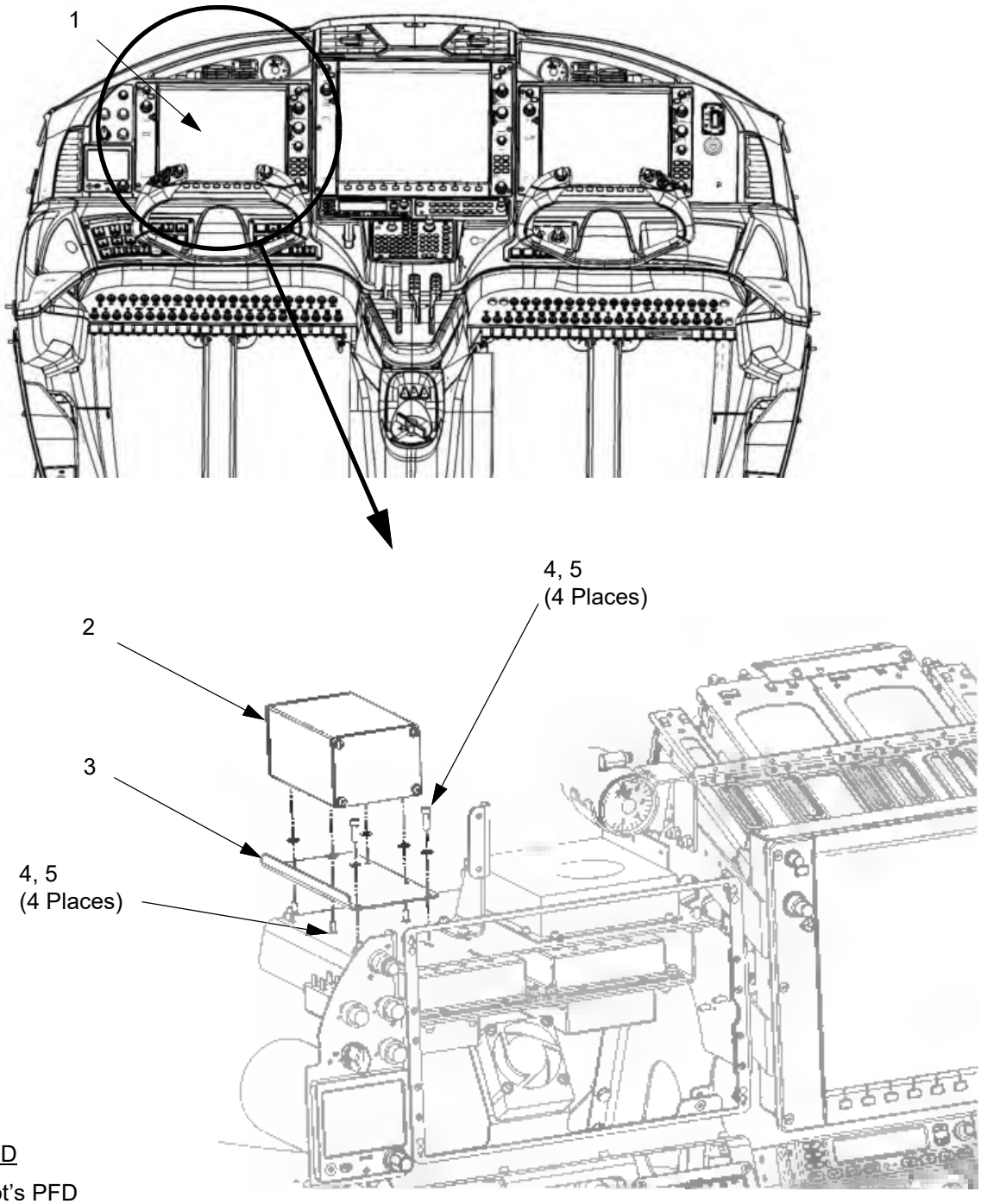

LEGEND

1. Pilot's PFD
2. De-Ice Boot Timer
3. Bracket
4. Screw
5. Washer

C

I. De-Ice Plumbing Firewall Aft

(1) Removal

(a) Set the BATT 1 and BATT 2 switches to OFF.

(b) Remove all external electrical power to the airplane (refer to Chapter 24-40).

(c) Remove the crew and/or passenger seats, as required.

(d) Remove the carpet, flooring, interior side panels, and pressure bulkhead access panel, as required.

(e) Unfasten any clamps securing the tubing to be removed.

(f) Remove the tubing or hose, as applicable.

(g) Cap or plug all open connections to keep contamination out of the system.

(2) Installation

(a) Install the tubing or hose, as applicable.

Note: Seal all pipe thread joints using Loctite™ 567 or anti-seize PTFE tape conforming to A-A-58092-2-2. Tighten the fittings by hand plus 1-1/2 to 3 turns.

Note: Wet set bulkhead fittings using RTV 100. Tighten jam nuts by hand plus 3/4 to 1 turn.

(b) Secure the tubing using clamps.

(c) Test the de-ice system for correct operation and inspect the plumbing and fittings for security and leaks. Refer to Chapter 30-10.A.(5).

(d) Re-install the pressure bulkhead access panel, interior side panels, flooring, and carpet, as required.

(e) Re-install the crew and/or passenger seats, as required.

Figure 30-10.4: Plumbing Firewall Aft (Sheet 1 of 3)

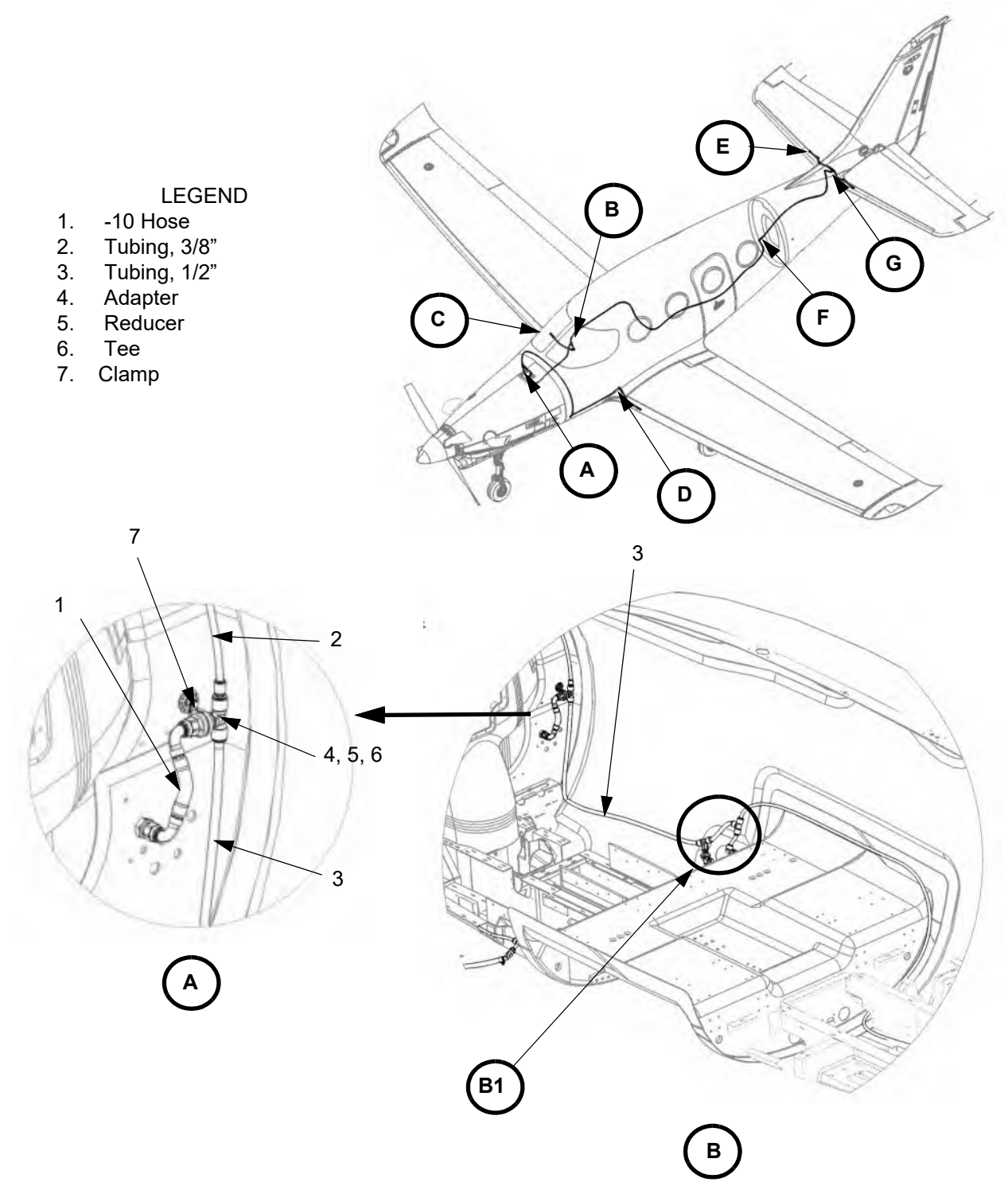

Figure 30-10.4: Plumbing Firewall Aft (Sheet 2 of 3)

LEGEND

1. Hose, Multi-Purpose
2. Tubing, 3/8”
3. Tubing, 1/2”
4. Tee
5. Elbow
6. Bulkhead Fitting
7. Clamp
8. Loop Clamp
9. Bushing
10. Pressure Switch

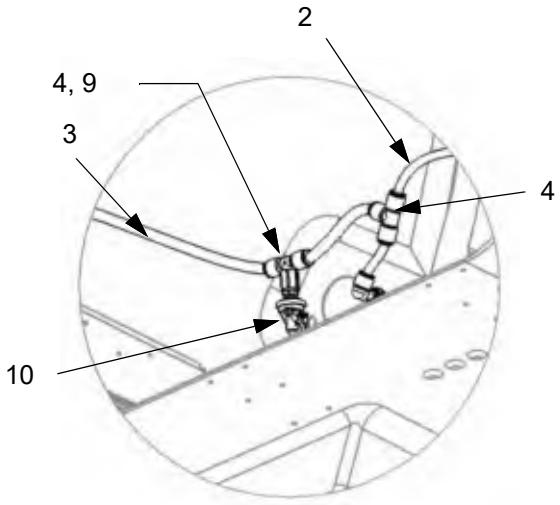

B1

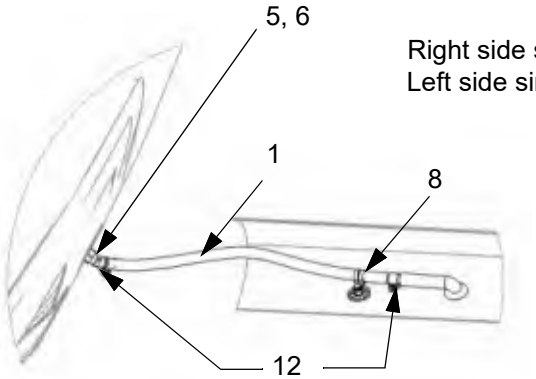

Right side shown.
Left side similar.

C

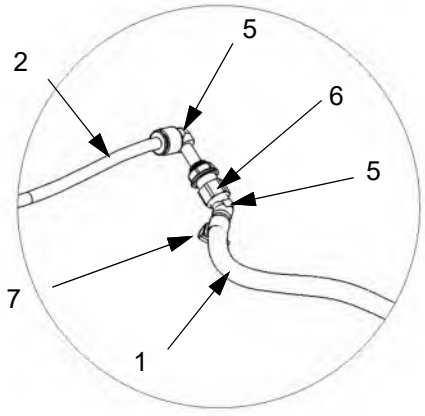

D

Figure 30-10.4: Plumbing Firewall Aft (Sheet 3 of 3)

LEGEND

2. Hose, Multi-Purpose
3. Tubing, 3/8”
5. Adapter
7. Tee
8. Elbow
10. Bulkhead Elbow
12. Clamp
13. Loop Clamp
14. Grommet
16. Pressure Switch

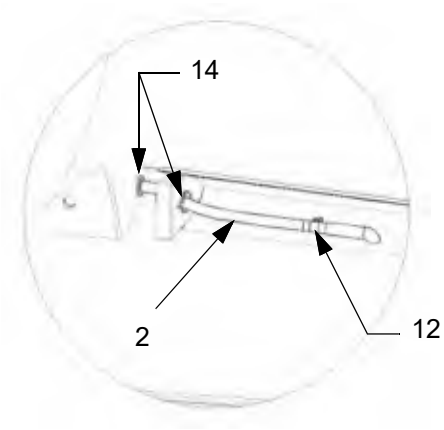

Right side shown.
Left side similar.

E

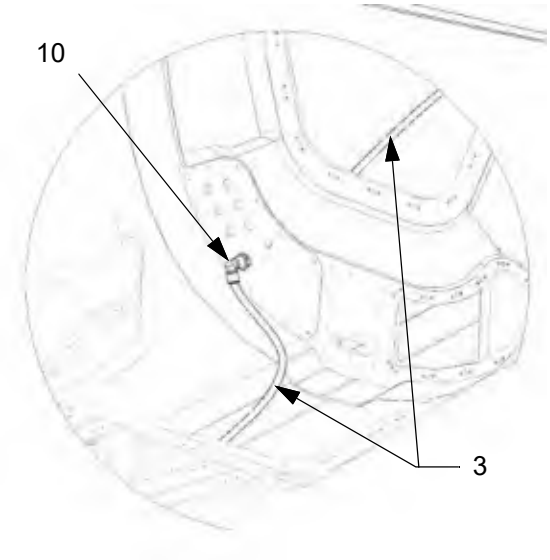

F

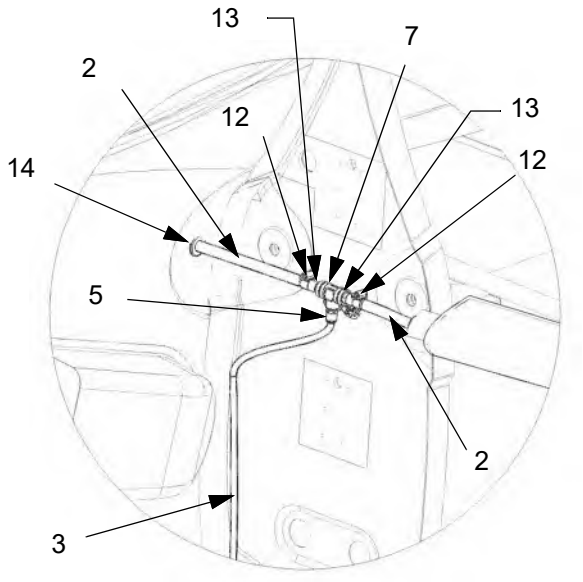

G

J. Ice Detector

(1) Removal

(a) Set the BATT 1 and BATT 2 switches to OFF.

(b) Remove all external electrical power to the airplane (refer to Chapter 24-40).

(c) Open and collar the ICE DETECTOR circuit breaker.

(d) Remove access panel 2LW (refer to Chapter 6-00).

(e) Disconnect the electrical connector from the ice detector.

(f) Remove the nut and washer that attach the ice detector probe to the wing.

(g) Remove the screws, washers and nuts that attach the ice detector to the wing.

(h) Carefully pry the ice detector away from the wing skin.

Note: The ice detector is attached to the wing skin with RTV 100.

(i) Remove the ice detector.

(2) Installation

(a) Carefully clean any residual RTV from the wing skin.

(b) Apply a thin coat of RTV 100 to the bottom of the ice detector.

(c) Put the ice detector in position in the wing.

(d) Apply Loctite 425 to the threads of the ice detector probe in accordance with the manufacturer's instructions.

CAUTION: Do not over tighten the nut on the ice detector probe, damage to the ice detector and wing skin may occur.

(e) Install the nut and washer on the ice detector probe. Tighten until all play is removed between the contact surface of the ice detector and the lower wing skin, then final tighten the nut an additional 1/4 to 1/2 turn.

(f) Install the screws, washers and nuts that attach the ice detector to the wing.

(g) Connect the electrical connector.

(h) Install access panel 2LW (refer to Chapter 6-00).

(i) Reset the ICE DETECTOR circuit breaker.

(j) Do the Ice Detector Operational Test, refer to 30-10.2.J(3).

(3) Operational Check

(a) Connect external electrical power to the airplane (refer to Chapter 24-40).

(b) Set the BATT 1 and BATT 2 switches to ON.

(c) Open the ICE DETECTOR circuit breaker.

(d) Make sure the ICE DETECT FAIL message appears.

(e) Close the ICE DETECTOR circuit breaker.

(f) Make sure the ICE DETECT FAIL message clears.

(g) Open the ICE DETECTOR circuit breaker.

(h) Make sure the Prop Heat and De-Ice Boot switches are off.

(i) Cover the optical sensor located in the channel of the ice detector, verify the ICE caution message is not displayed.

(j) Clear the optical sensor of the ice detector.

(k) Reset the ICE DETECTOR circuit breaker.

(l) Cover the optical sensor located in the channel of the ice detector.

(m) Make sure the amber ICE caution message appears.

(n) Clear the optical sensor of the ice detector.

(o) Set the BATT 1 and BATT 2 switches to off.

(p) Disconnect external electrical power from the airplane (refer to Chapter 24-40).

(4) Ice Detector Calibration

Note: Calibration must be performed at an ambient temperature of 58° - 78° F (14.4° - 25.6° C)

Note: Calibration can be performed on a bench or on the aircraft. If performing the calibration on the aircraft, the TK30000000A-03 spacer is not used.

(a) Remove wing access panel 2LW (refer to chapter 6-00) to access the ice detector electrical connector. Disconnect the electrical connector P548/J548. If performing calibration on a bench, remove the ice detector from the aircraft, refer to 30-10.J(1).

(b) Connect a 24 volt power supply to the ice detector.

(i) Connect power to pin 1 of J548 (red wire).

(ii) Connect ground to the pin 2 of J548 (blue wire).

(c) Connect a calibrated multimeter to pin 6 of J548 (violet wire) to monitor voltage.

Note: Wait 30 minutes after supplying power to the ice detector for it to warm up.

(d) With the probe unobstructed, ensure that the voltage output shown on the multimeter (pin 6) is more than 3VDC. If it is less, clean the probe until the voltage is above 3V.

(e) Install the calibration fixture (PN: TK30000000A) on the ice detector. Use the calibration spacer (PN: TK30000000A-03) if performing the calibration on a bench. Use the ice detector nut to secure the fixture to the ice detector.

Note: The spacer simulates the thickness of the wing skin.

(f) Place the 1.3V calibration media (PN: 300A9480-5) in the clamp, make sure the beveled corner of the media is placed as shown in Figure 30-10.7.

(g) Slide the clamp/calibration media in the fixture so the edge of the media is flush with the flat surface of the ice detector. Rotate the ice detector in the fixture if necessary to align the calibration media with the flat surface of the probe.

Note: If the media is misaligned or not held in the tooled location, the voltage output results will not be correct.

(h) If the voltage output is between 1.70 and 1.90 VDC, the unit is calibrated properly, proceed to step (j). If the signal is out of tolerance, proceed to the next step.

Note: The potentiometer adjustment screw access is plugged with hot glue. Remove the hot glue to perform the adjustment.

(i) Use a screwdriver to adjust the potentiometer to bring the value to 1.90 VDC. Turn the potentiometer clockwise to decrease and counterclockwise to increase.

Note: Always approach the target value of 1.90V from below. E.g., if the current value of is 2.05V, rotate the potentiometer clockwise until is ~1.8V then rotate the potentiometer counterclockwise until is 1.90V.

(j) For on-bench calibrations, check the calibration as follows:

(i) Slide the clamp/calibration media away from the ice detector.

(ii) Remove the 1.3V calibration media (PN: 300A9480-5) and install the 1.5V calibration media (PN: 300A9480-6) in the calibration fixture. Make sure the beveled corner of the media is placed as shown in Figure 30-10.7.

(iii) Connect a calibrated multimeter to pin 4 of J548 (green wire) to monitor voltage.

(iv) With the ice detector unobstructed, the voltage should be less than 0.5V.

(v) Slide the clamp/calibration media in the fixture so the edge of the media is flush with the flat surface of the ice detector. Rotate the ice detector in the fixture if necessary to align the calibration media with the flat surface of the probe.

Note: If the media is misaligned or not held in the tooled location, the voltage output results will not be correct.

(vi) If voltage on pin 4 of J548 (green wire) is at least 3.0V, the calibration is correct. If it is less than 3.0 V, perform the calibration again.
(vii) Fill the potentiometer adjustment hole with hot glue.
(viii) Remove the calibration fixture from the ice detector.
(ix) Install the ice detector in the aircraft, refer to 30-10.2.J(2).
(x) Do the Ice Detector Operational Test, refer to 30-10.2.J(3).

(k) For on-aircraft calibrations, check the calibration as follows:

(i) Install the 1.5V calibration media (PN: 300A9480-6) in the calibration fixture. Make sure the beveled corner of the media is placed as shown in Figure 30-10.7.
(ii) Make sure the aircraft is in the weight-on-wheels configuration, the ice detector is unobstructed, and Ng is below 4%.
(iii) Connect external electrical power to the airplane (refer to Chapter 24-40).
(iv) Set the BATT 1 and BATT 2 switches to ON.
(v) Slide the clamp/calibration media in the fixture so the edge of the media is flush with the flat surface of the ice detector. Rotate the ice detector in the fixture if necessary to align the calibration media with the flat surface of the probe.

Note: If the media is misaligned or not held in the tooled location, the ICE CAS message will not illuminate.

(vi) The ICE CAS message should illuminate. If not, perform the calibration.
(vii) Set the BATT 1 and BATT 2 switches to off.
(viii) Remove the calibration fixture and reinstall the nut on the ice detector in accordance with 30-10.J.2(d) and (e).
(ix) Fill the potentiometer adjustment hole with hot glue.
(x) Disconnect external electrical power from the airplane (refer to Chapter 24-40).
(xi) Install wing access panel 2LW (refer to chapter 6-00).
(xii) Do the Ice Detector Operational Test, refer to 30-10.2.J(3).

(5) Ice Detector Calibration Check - No Calibration Fixture

(i) Make sure the aircraft is in the weight-on-wheels configuration, the ice detector is unobstructed, and engine Ng indication is below 4%.

(ii) Connect external electrical power to the airplane (refer to Chapter 24-40).

(iii) Set the BATT 1 and BATT 2 switches to ON.

Note: Wait 30 minutes after supplying power to the ice detector for it to warm up.

(iv) Place the 1.5V calibration media (PN: 300A9480-6) in the ice detector sensor as shown in figure 30-10.7, sheet 3. Make sure the calibration media is 90° to the sensing surface of the probe.

Note: Rotate the media as necessary to make it perpendicular to the sensing surface of the probe.

(v) The ICE caution CAS message should illuminate. If the ICE caution CAS message does not illuminate, perform the calibration procedure, refer to 30-10.2(J)(4).

(vi) Remove the media from the ice detector.

(vii) Set the BATT 1 and BATT 2 switches to off.

(viii) Disconnect external electrical power from the airplane (refer to Chapter 24-40).

(6) Ice Detector Calibration Check - Using the TK30000000A Calibration Fixture

Note: This procedure is performed at the annual inspection or can be used for troubleshooting purposes.

(i) Install the calibration fixture (PN: TK30000000A) on the ice detector. Use the ice detector nut to secure the fixture to the ice detector.
(ii) Install the 1.5V calibration media (PN: 300A9480-6) in the calibration fixture. Make sure the beveled corner of the media is placed as shown in Figure 30-10.7.
(iii) Make sure the aircraft is in the weight-on-wheels configuration, the ice detector is unobstructed, and engine Ng indication is below 4%.
(iv) Connect external electrical power to the airplane (refer to Chapter 24-40).
(v) Set the BATT 1 and BATT 2 switches to ON.

Note: Wait 30 minutes after supplying power to the ice detector for it to warm up.

(vi) Slide the clamp/calibration media in the fixture so the edge of the media is flush with the flat surface of the ice detector. Rotate the fixture if necessary to align the calibration media with the flat surface of the probe.

Note: If the media is misaligned or not held in the correct location, the ICE CAS message will not illuminate.

(vii) The ICE CAS message should illuminate. If the ICE CAS message does not illuminate, perform the calibration procedure, refer to 30-10.2(J)(4).
(viii) Set the BATT 1 and BATT 2 switches to off.
(ix) Remove the calibration fixture from the ice detector.
(x) Apply Loctite 242 to the threads of the ice detector in accordance with the manufacturer's instructions.

CAUTION: Do not over tighten the nut on the ice detector probe, damage to the ice detector and wing skin may occur.

(xi) Install the nut and washer on the ice detector probe. Tighten until all play is removed between the contact surface of the ice detector and the lower wing skin, then final tighten the nut an additional 1/4 to 1/2 turn.
(xii) Disconnect external electrical power from the airplane (refer to Chapter 24-40).

Figure 30-10.5: Ice Detector

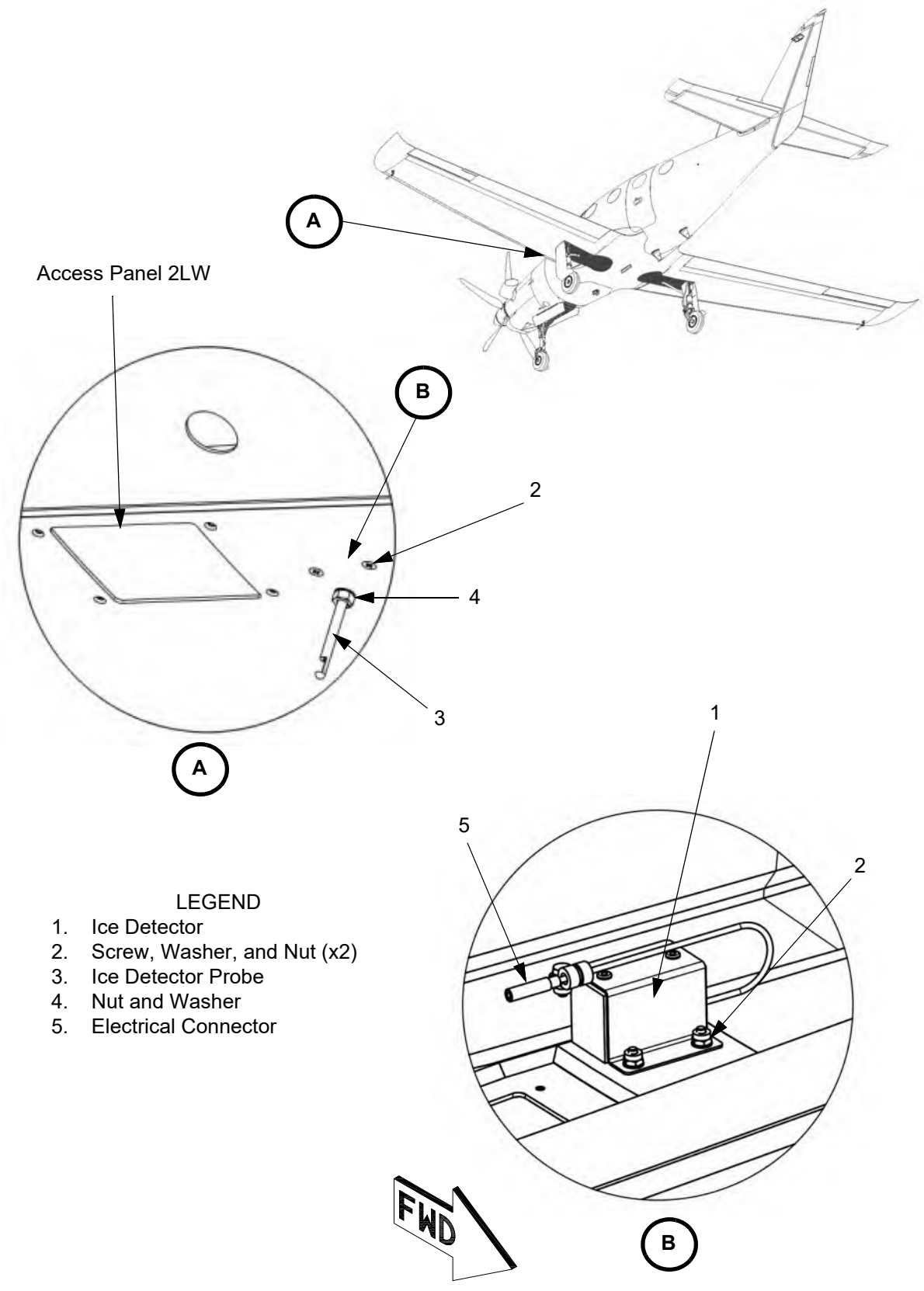

LEGEND

1. Ice Detector
2. Screw, Washer, and Nut (x2)
3. Ice Detector Probe
4. Nut and Washer
5. Electrical Connector

Figure 30-10.6: OAT Manual Temperature Adjuster

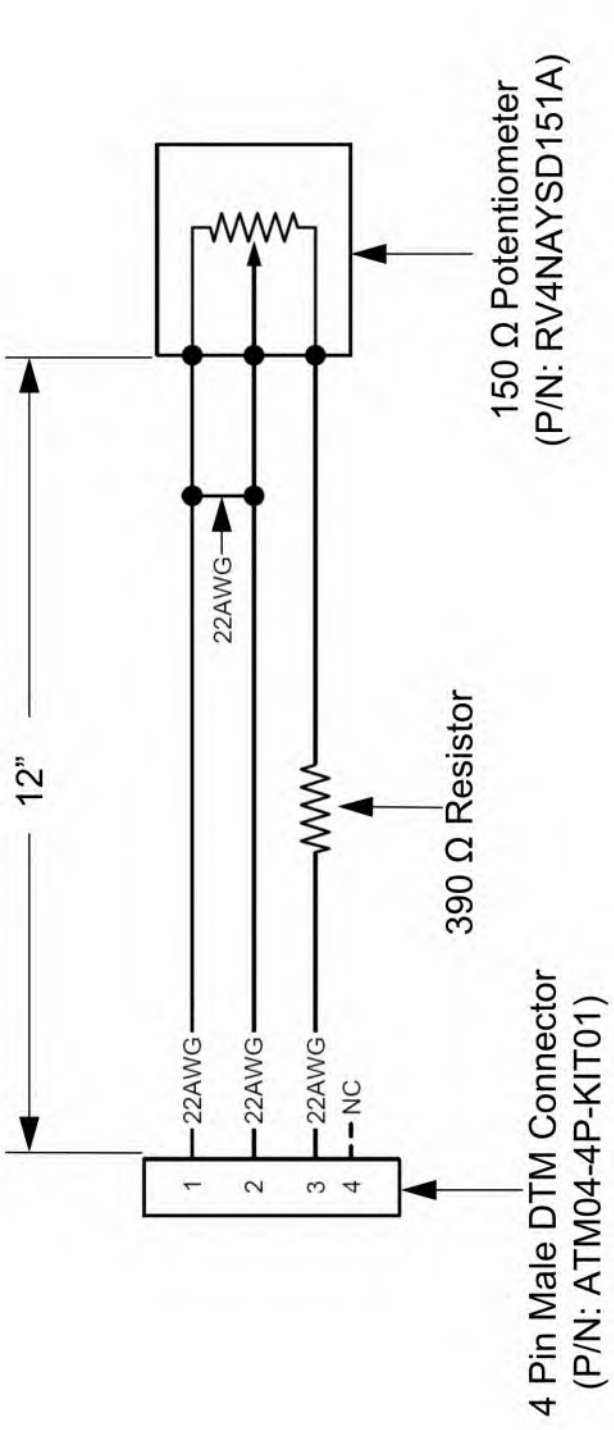

Figure 30-10.7: Ice Detector Calibration (sheet 1 of 3)

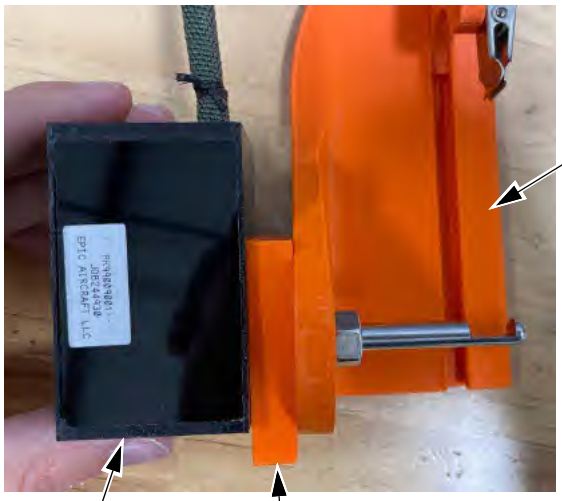

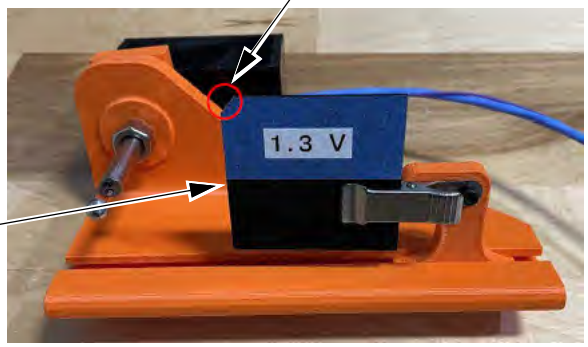



Figure 30-10.7: Ice Detector Calibration (sheet 2 of 3)





Figure 30-10.7: Ice Detector Calibration (sheet 3 of 3)

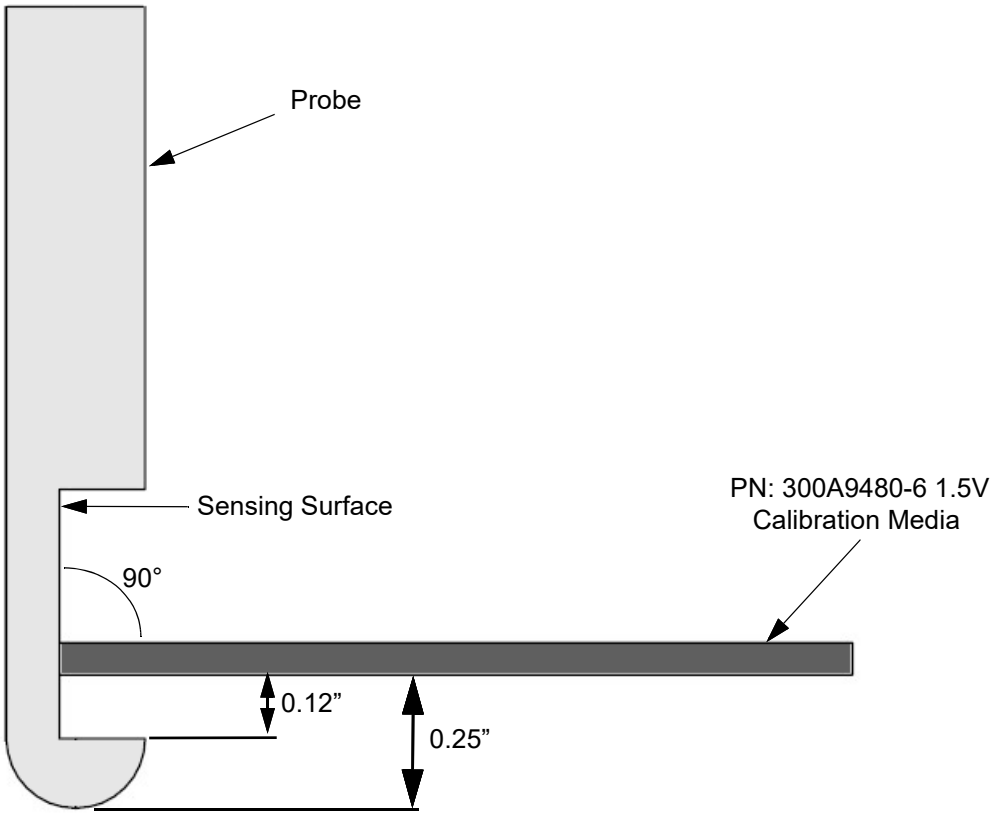

PITOT AND STALL PREVENTION SYSTEMS

1. Description

Pitot Heat

The E1000 is equipped with two pitot-static systems (pilot and copilot). The probes are installed on the outboard, underside of each wing. The pilot side pitot system interfaces with ADAHRS #1 and the copilot side system interfaces with ADAHRS #2. The systems are constructed of nylon tubing that is connected by aircraft quality tube fittings. Each pitot probe has a built in 24V heating element. The static ports are outside of the aircraft ice impingement zone and do not require heat. Fault annunciations for failures of the pitot probe heating are provided via the Garmin CAS system.

The pitot heat has on-ground and in-air modes that are set based on the Weight-on-Wheels relays. The on-ground power is ½ the voltage of the in-air power to prevent structural damage to the wing installation without the benefits of convective cooling. Prior to takeoff, the pilot engages the pitot probe heat by pressing the PITOT STALL HT switch on the right-side switch panel. Each pitot probe also contains a drain hole to allow moisture to drain from the probe.

Stall Prevention Heat

The stall warning and protection system in the E1000 has two lift transducers that provide a calibrated Angle of Attack (AoA). The AoA provides an input for stall warning, stick shaker, and stick pusher functions. The lift transducers are installed on the underside of the leading edge of the left and right wings.

The lift transducers are electrically heated to prevent ice formation. Each lift transducer has internal and supplemental heaters. There are 4 heating elements on each lift transducer, two plate heaters, one vane heater, and one case heater. In addition, a supplemental heater is installed above each lift transducer. The supplemental heater improves the de-ice capability around the lift transducer in colder, rime icing conditions.

Both the internal and supplemental heaters have a ground operating mode and an air operating mode based on the position of the Weight-on-Wheels (WoW) relays. The left lift transducer heater is based on the left WoW relay position and the right lift transducer heater is set based on the right WoW relay position. Both the left and right supplemental heaters are based on a single WoW relay. The on-ground voltage to the heaters is lower than the in-air voltage to prevent structural damage to the wing without the convective cooling of flight. Proper functioning of lift transducer heating is verified by the L/R Stall Heat Current Sensors.

Lift transducer heating is turned on by the PITOT STALL HT switch, which energizes relays to send current to the lift transducer heating elements. The electrical current for the heating elements passes through the L/R Stall Heat Current Sensors. When a heating element fails, the current drops below the limit for the current sensor switch which sends a ground discrete to trigger the L/R STALL HT FAIL CAS message.

The supplemental heaters have four modes of operation, in-air off, in-air on, on-ground off, and on-ground on. Air and ground modes are set automatically based on WoW relay position. Outside Air Temperature (OAT) is used in the control on/off logic for the supplemental heat system to help preserve reliability. When OAT is </= 10°C and the PITOT STALL HT switch is on then the supplemental heater will turn on in either air or ground mode, depending on the status of the Weight-On-Wheels relays. OAT and WoW modes are engaged/disengaged by separate relays. The lift transducer internal heaters are not automatically controlled with OAT.

2. Maintenance Practices

Note: This section covers the ancillary electrical components in the pitot and stall warning system and the supplemental stall heaters. The heating elements in the pitot tubes and lift transducers can not be independently replaced. If it is determined that a heating element has failed, refer to chapter 34-10 for pitot tube replacement and chapter 31-20 for lift transducer replacement.

Note: Refer to Figures 30-30.1 and 30-30.2 for component locations.

A. Pitot and Stall Prevention Heat Electrical Components

(1) Removal

(a) To remove the left or right stall heat shunts or right pitot heat current sensor do the steps that follow:

(i) Remove the glareshield, refer to chapter 25-10.

(ii) Disconnect the wires from the current sensor or shunt.

Note: Identify the wires and their positions for installation.

(iii) Remove the screws that attach the current sensor or shunt to the instrument panel shelf.

(iv) Remove the current sensor or shunt.

(b) To remove the left pitot heat current sensor do the steps that follow:

(i) Remove the pilot's PFD, refer to chapter 34-40.

(ii) Disconnect the wires from the current sensor.

Note: Identify the wires and their positions for installation.

(iii) Remove the screws that attach the current sensor instrument panel support.

(iv) Remove the current sensor.

(c) To remove the left pitot heat relay or on-ground pitot heat relay do the steps that follow:

(i) Remove the pilot's seat, refer to chapter 25-10.

(ii) Remove the nuts that attach the relay to the relay socket.

(iii) Remove the relay.

(d) To remove the right pitot heat relay or left or right stall heat relay do the steps that follow:

(i) Remove the copilot's seat, refer to chapter 25-10.

(ii) Remove the nuts that attach the relay to the relay socket.

(iii) Remove the relay.

(2) Installation

(a) To install the left or right stall heat shunt or right pitot heat current sensor do the steps that follow:

(i) Put the current sensor or shunt in position on the instrument panel shelf.

(ii) Install the fasteners that attach the current sensor or shunt to the instrument panel shelf.

(iii) Connect the wires to the current sensor or shunt.

(iv) Install the glareshield, refer to chapter 25-10.

(v) Do the Inspection/Check of the stall heat shunt or right pitot heat current sensor as applicable.

(b) To install the left pitot heat current sensor do the steps that follow:

(i) Put the current sensor in position on the instrument panel support.

(ii) Install the fasteners that attach the current sensor to the instrument panel support.

(iii) Connect the wires to the current sensor.

(iv) Install the pilots PFD, refer to chapter 34-40.

(v) Do the Inspection/Check of the left pitot heat current sensor.

CAUTION: To prevent damage, ensure pitot heat is on for no longer than 5 minutes.

(vi) Set the PITOT STALL HT switch to ON.

(vii) Make sure the LEFT PITOT HEAT FAIL CAS message does not appear.

(viii) Set the PITOT STALL HT switch to OFF.

(ix) Set the BATT 1 and BATT 2 switches to OFF.

(x) Disconnect external power from the airplane, refer to chapter 24-40.

(c) To install the left pitot heat relay or on-ground pitot heat relay do the steps that follow:

(i) Put the relay in position on the relay socket.

(ii) Install the nuts that attach the relay to the relay socket.

(iii) Install the pilot's seat, refer to chapter 25-10.

(iv) Do the Inspection/Check of the left pitot heat relay or on-ground pitot heat relay.

(d) To install the right pitot heat relay or left or right stall heat relay do the steps that follow:

(i) Put the relay in position on the relay socket.

(ii) Install the nuts that attach the relay to the relay support.

(iii) Install the copilot's seat, refer to chapter 25-10.

(iv) Do the Inspection/Check of the right pitot heat relay or right stall heat relay.

(3) Inspection/Check:

(a) Check the left or right pitot heat current sensor as follows:

(i) Connect external power to the airplane, refer to chapter 24-40.

(ii) Set the BATT 1 and BATT 2 switches to ON.

CAUTION: To prevent damage, ensure pitot heat is on for no longer than 5 minutes.

(iii) Set the PITOT STALL HT switch to ON.

(iv) Make sure the LEFT PITOT HEAT FAILCAS message for the left current sensor or RIGHT PITOT HEAT FAIL CAS message for the right current sensor does not appear.

(v) Set the PITOT STALL HT switch to OFF.

(vi) Set the BATT 1 and BATT 2 switches to OFF.

(vii) Disconnect external power from the airplane, refer to chapter 24-40.

(b) Check the left or right stall heat shunts as follows:

(i) Perform the Stall Heat Fail Annunciation Calibration, refer to chapter 39-10.

(ii) Perform the Stall Heater Fail Annunciation Verification, refer to Chapter 30-30.2.C.

(c) Check the left or on-ground pitot heat relay as follows:

(i) Connect external power to the airplane, refer to chapter 24-40.

(ii) Set the BATT 1 and BATT 2 switches to ON.

CAUTION: To prevent damage, ensure pitot heat is on for no longer than 5 minutes.

(iii) Set the PITOT STALL HT switch to ON.

(iv) Make sure the LEFT PITOT HEAT FAIL CAS message does not appear.

(v) Set the PITOT STALL HT switch to OFF.

(vi) Set the BATT 1 and BATT 2 switches to OFF.

(vii) Disconnect external power from the airplane, refer to chapter 24-40.

(d) Check the right pitot heat relay as follows:

(i) Connect external power to the airplane, refer to chapter 24-40.

(ii) Set the BATT 1 and BATT 2 switches to ON.

CAUTION: To prevent damage, ensure pitot heat is on for no longer than 5 minutes.

(iii) Set the PITOT STALL HT switch to ON.

(iv) Make sure the RIGHT PITOT HEAT FAIL CAS message does not appear.

(v) Set the PITOT STALL HT switch to OFF.

(vi) Set the BATT 1 and BATT 2 switches to OFF.

(vii) Disconnect external power from the airplane, refer to chapter 24-40.

(e) Check the left or right stall heat relay as follows:

(i) Perform the Stall Heat Fail Annunciation Calibration, refer to chapter 39-10.

(ii) Perform the Stall Heater Fail Annunciation Verification, refer to Chapter 30-30.2.C.

B. Supplemental Stall Heaters

(1) Removal

(a) Set the BATT 1 and BATT 2 switches to OFF.

(b) Disconnect external electrical power from the airplane (refer to Chapter 24-40).

(c) Remove access panel 5LW or 5RW (refer to Chapter 6), as applicable.

(d) Unpin the secondary stall heater wires from the electrical connector.

Note: Identify the wires and their positions for installation.

(e) Using a plastic scraper, carefully scrape away the sealant around the supplemental stall heater plate.

(f) Remove the screws that attach the supplemental stall heater plate to the leading edge of the wing.

(g) Remove the secondary stall heater plate/heating element and insulator.

Note: The heating element is attached to the plate with adhesive and can be replaced independently.

(h) Remove the sealant in the pass-thru hole around the harness.

(i) If the heating element is being replaced, remove the heating element from the plate and clean any remaining adhesive with isopropyl alcohol.

(2) Installation

(a) Run the heating element wires through the pass-thru into the wing.

(b) If installing a new heating element, do the steps that follow:

(i) Clean the surface of heater plate with isopropyl alcohol using a lint-free cloth.

Note: The heater harness assembly is supplied with pressure sensitive adhesive and release liner.

(ii) Remove release liner and position indicated edge of heating element flush with edge of plate and attach in the orientation such that lead wires align with pass-thru hole in wing.

(iii) Install the heater harness assembly to plate using firm, even hand pressure using a rubber roller, roll from the center toward the edges to remove trapped air.

Note: It is acceptable to use heat gun to aid in adhesion. while still warm, repeat previous step to roll out trapped air.

(c) Put the insulator, heating element, and secondary stall heater plate in position on the wing.

(d) Install the screws that attach the secondary stall heater assembly to the leading edge. Torque the screws to 7 - 9 in-lbs.

(e) Make sure the upper edge of the supplemental heater meets the flushness requirements shown in 30-30.3 sheet 2. Form the edge as needed to meet the requirements.

(f) From inside the wing, apply a bead of DC 3145 RTV around the harness in the pass-thru hole to prevent contact with the structure.

(g) Apply a bead of PR-1425 B-1/2 or B-2 sealant over the seam between the secondary stall heater and the de-ice boot. Refer to figure 30-30.3 sheet 3 and table 30-30.1 for sealant dimensional requirements. Apply and cure the sealant in accordance with the manufacturer's instructions.

(h) Install the heating element wires in the connector.

(i) Install access panel 5LW or 5RW (refer to Chapter 6), as applicable.

(j) Do the Stall Heat Fail Annunciation Calibration (refer to Chapter 39-10).

(k) Do the Stall Heat Annunciation Verification (refer to Chapter 30-30.2.C).

(l) Do the Stall Heat Operational Check (refer to Chapter 30-30.2.C).

Figure 30-30.1: Component Locations - K003 - K010 (Sht 1 of 2)

LEGEND

1. Right Pitot Current Sensor
2. Right Stall Heat Shunt
3. Right Stall Heat Relay
4. Right Pitot Heat Relay
5. On Ground Relay
6. Left Pitot Current Sensor
7. Left Stall Heat Shunt
8. Left Stall Heat Relay
9. Left Pitot Heat Relay

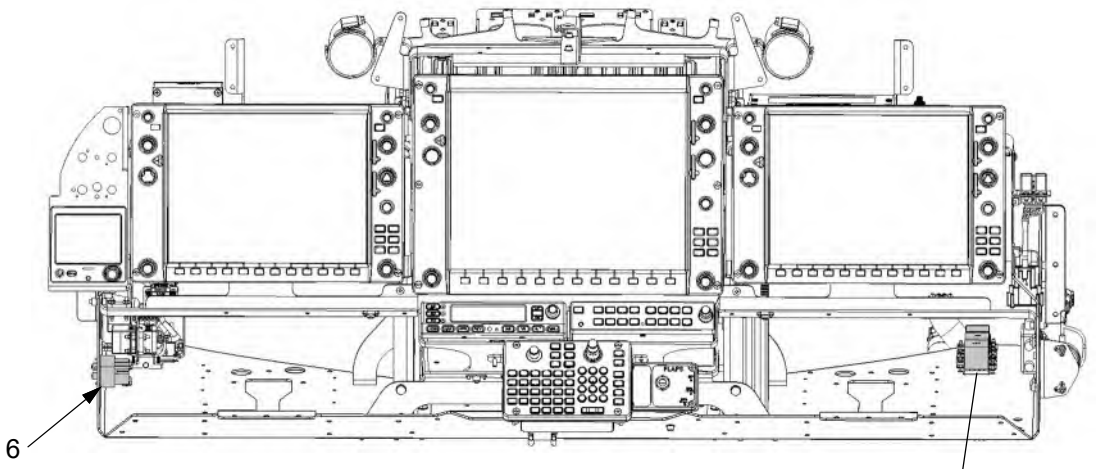

View Looking Forward
(Shown with Components Removed for Clarity)

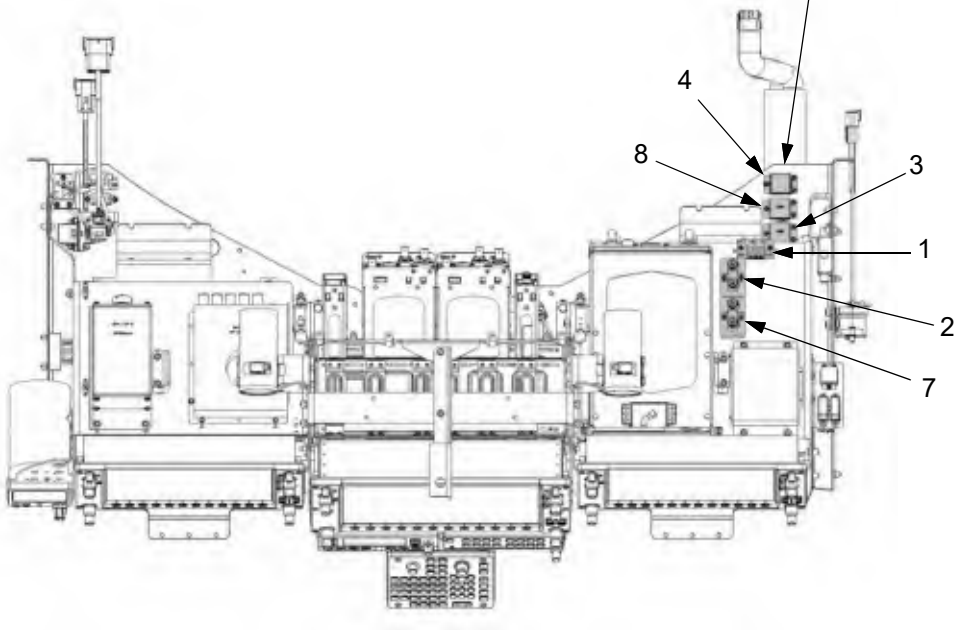

View Looking Down
(Shown with Components Removed for Clarity)

Figure 30-30.1: Component Locations - K003 - K010 (Sht 2 of 2)

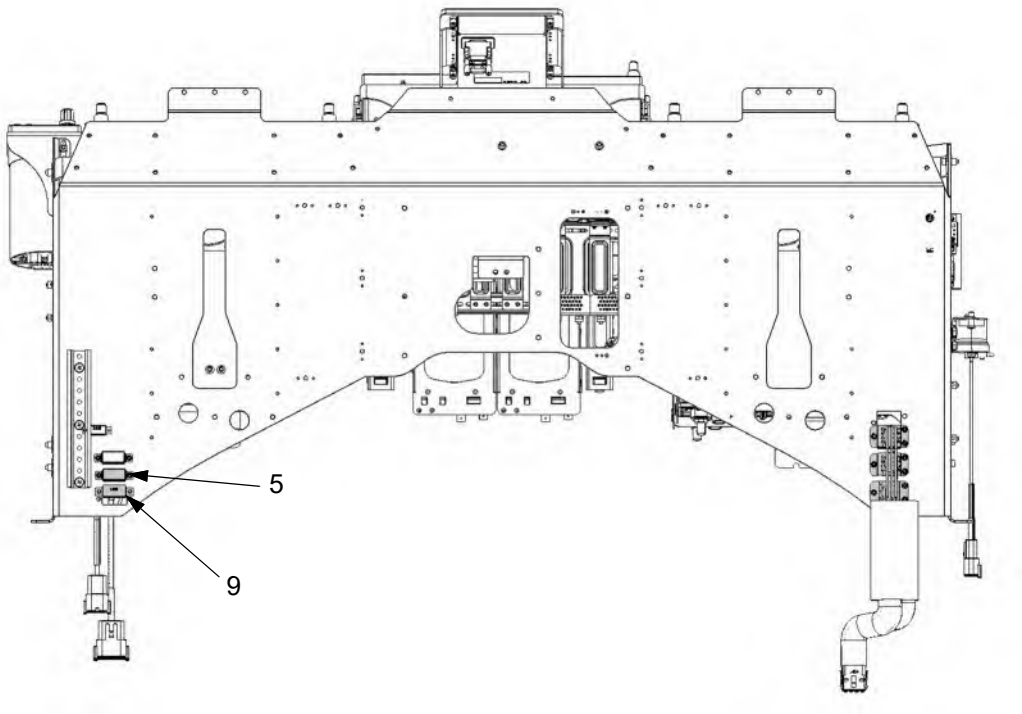

View Looking Up
(Shown with Components Removed for Clarity)

Figure 30-30.2: Component Locations - K011 and On and K003-K010 with SB-00017 (Sht 1 of 2)

LEGEND

1. Right Pitot Current Sensor
2. Right Stall Heat Shunt
3. Right Stall Heat Relay
4. Right Pitot Heat Relay
5. On Ground Relay
6. Left Pitot Current Sensor
7. Left Stall Heat Shunt
8. Left Stall Heat Relay
9. Left Pitot Heat Relay

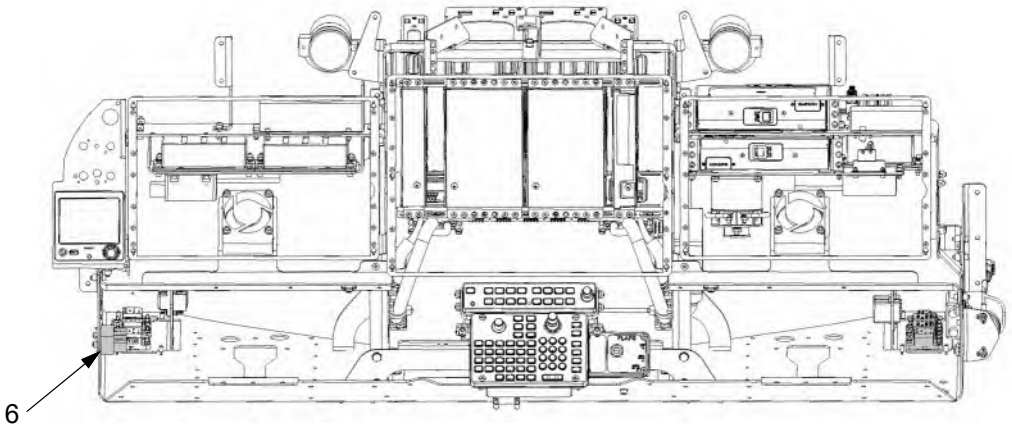

View Looking Forward
(Shown with Components Removed for Clarity)

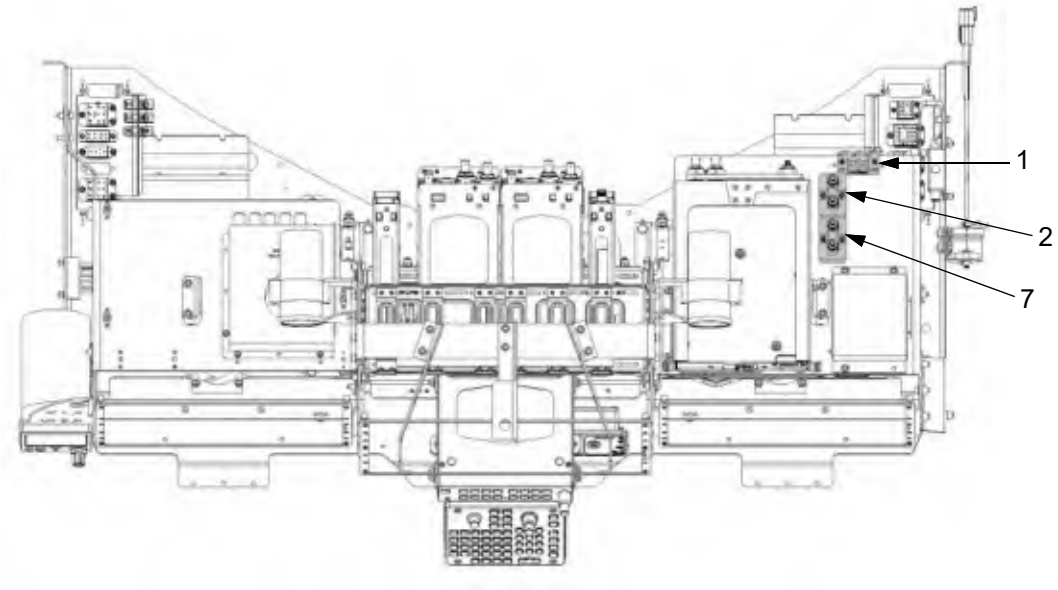

View Looking Down
(Shown with Components Removed for Clarity)

Figure 30-30.2: Component Locations - K011 and On and K003-K010 with SB-00017 (Sht 2 of 2)

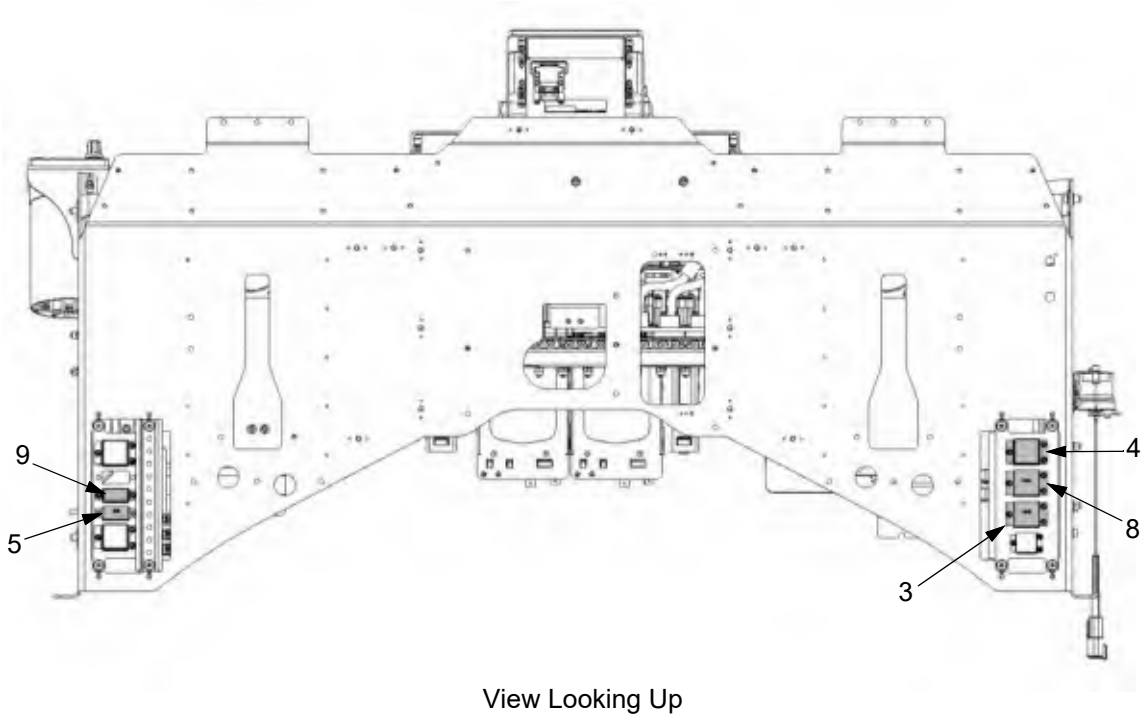

View Looking Up
(Shown with Components Removed for Clarity)

Figure 30-30.3: Supplemental Stall Heater - K056 and On and K003-K055 with SB-0035 (Sht 1 of 3)

LEGEND

1. Lift Transducer
2. Supplemental Heater Plate
3. Heating Element
4. Insulation
5. Screw (x2)

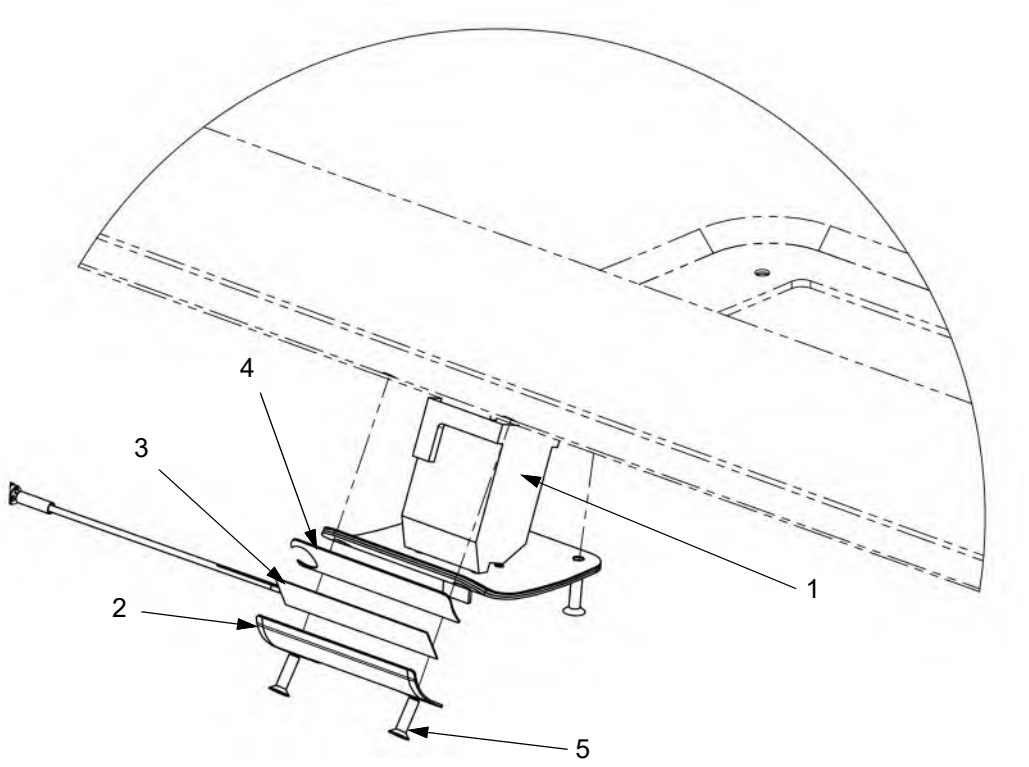

Right Side Shown, Left Side Opposite

Figure 30-30.3: Supplemental Stall Heater - K056 and On and K003-K055 with SB-0035 (Sht 2 of 3)

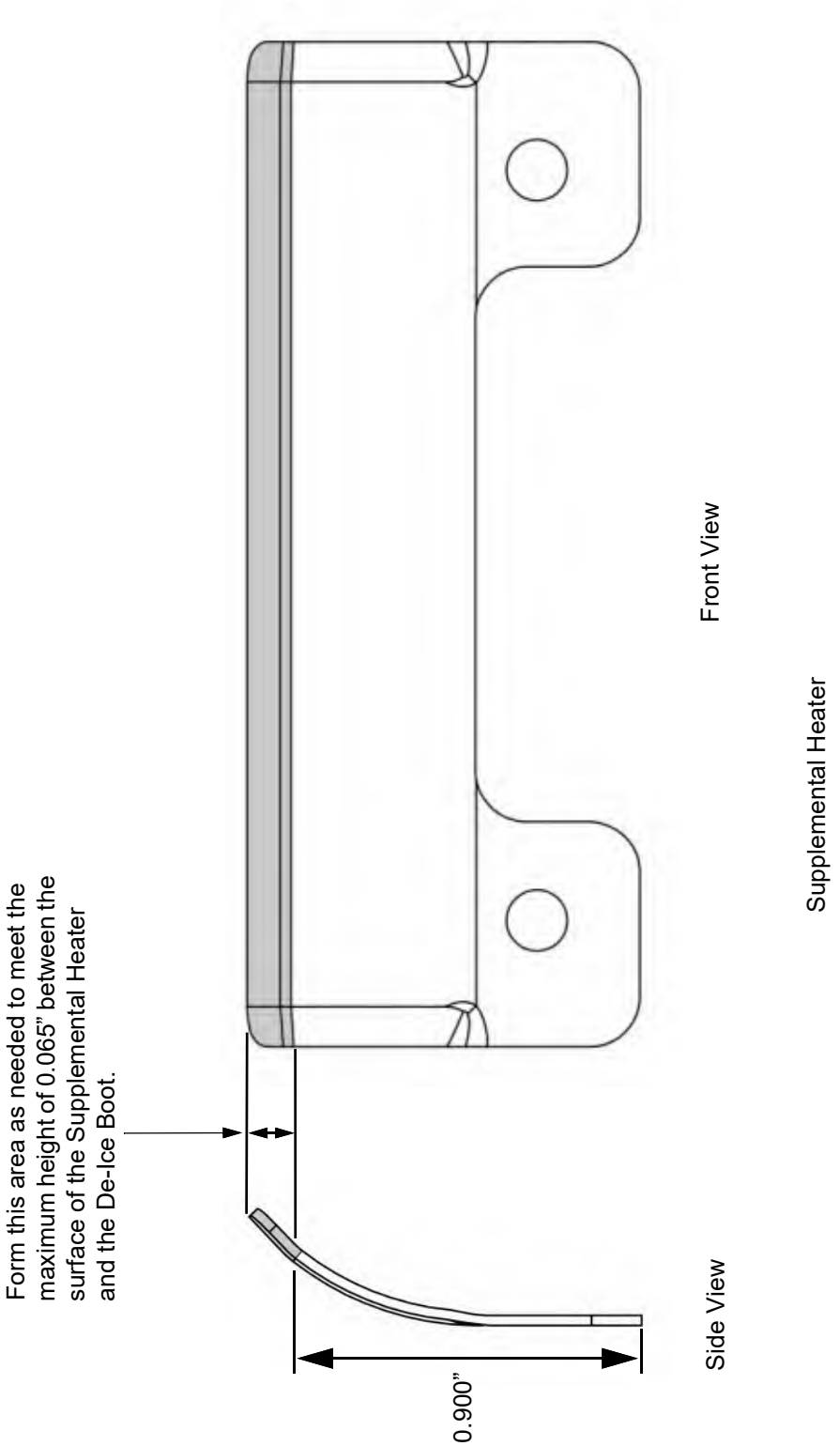

Figure 30-30.3: Supplemental Stall Heater - K056 and On and K003-K055 with SB-0035 (Sht 3 of 3)

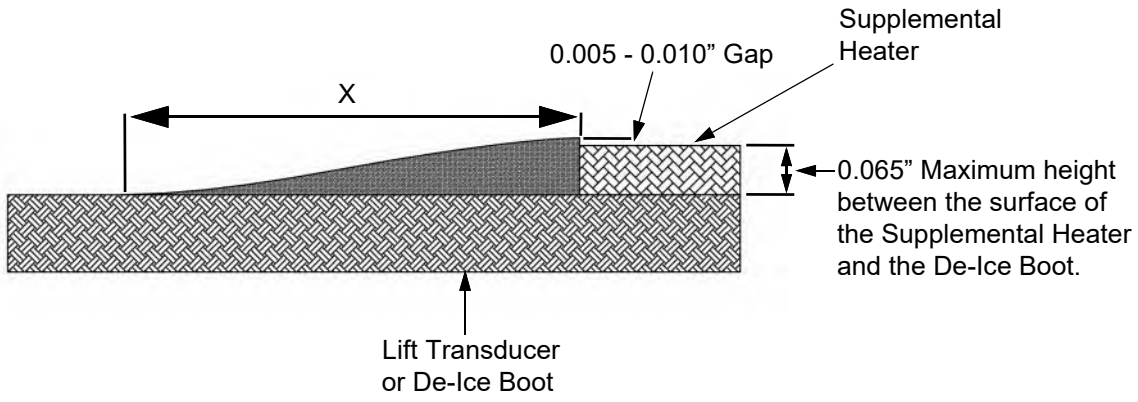

Table 30-30.1: Supplemental Stall Heater Sealant Transition Dimensions

Dimension	X
Upper and Side Edges (in)	0.150 - 0.200”
Lower Edge (in)	0.060 - 0.150”

C. Pitot and Stall Heat Operational Checks

(1) Stall Computer Fail Annunciation Check

(a) Remove access panel 5LW or 5RW (refer to Chapter 6).

(b) Connect external electrical power to the airplane (refer to Chapter 24-40).

(c) Set the BATT 1 and BATT 2 switches to ON.

(d) Make sure the SPS COMP 1A, SPS COMP 2A, SPS COMP 1B and SPS COMP 2B circuit breakers are closed.

(e) Disconnect 1P423 (Left Lift Transducer Connector), verify the L STALL CMP FAIL caution CAS message illuminates.

(f) Reconnect 1P423, verify the L STALL CMP FAIL caution CAS message extinguishes.

(g) Disconnect 2P423 (Right Lift Transducer Connector), verify the R STALL CMP FAIL caution CAS message illuinates.

(h) Reconnect 2P423, verify the R STALL CMP FAIL caution CAS message extinguishes.

(i) Set the BATT 1 and BATT 2 switches to off.

(j) Disconnect external electrical power from the airplane (refer to Chapter 24-40).

(k) Install access panel 5LW or 5RW (refer to Chapter 6).

(2) Pusher Off Annunciation Check

(a) Connect external electrical power to the airplane (refer to Chapter 24-40).

(b) Set the BATT 1 and BATT 2 switches to ON.

(c) Open the PUSHER circuit breaker.

(d) Make sure the PUSHER OFF caution CAS illuminates.

(e) Reset the PUSHER circuit breaker.

(f) Make sure the PUSHER OFF caution CAS message extinguishes.

(g) Press and hold the AP Disconnect switch, verify the PUSHER OFF caution CAS message illuminates.

(h) Reset the AP Disconnect switch, verify the amber caution PUSHER OFF CAS message extinguishes.

(i) Set the BATT 1 and BATT 2 switches to off.

(j) Disconnect external electrical power from the airplane (refer to Chapter 24-40).

(3) Stall Heat (SN: K003 - K055 without SB-0035)

(a) Stall Heater Fail Annunciation Verification

The Stall Heater Fail messages require a calibration which is done during the Garmin Software Loading. Do the following checks to verify the calibration was completed and is functioning properly.

(i) Put the aircraft in the weight-on-wheels configuration.

(ii) Open the following circuit breakers: L STALL HEAT, R STALL HEAT, L PITOT HEAT and R PITOT HEAT.

(iii) Set up the left stall heaters to be able to induce a failure of each individual heater (Pins 1P423-A, 1P423-C, 1P425-A and 1P425-C).

(iv) Set the PITOT STALL HT switch to ON.

(v) Close the L STALL HEAT circuit breaker. Verify the L STALL HEAT FAIL caution CAS does NOT illuminate. One at a time, fail each individual heater, verify loss of each heater individually activates the L STALL HEAT FAIL caution CAS. Open the L STALL HEAT CB.

CAUTION: To prevent damage, ensure ground heat is on no longer than 5 minutes.

(vi) Put the aircraft in the weight-off-wheels configuration.

(vii) Close the L STALL HEAT circuit breaker. Verify the L STALL HEAT FAIL caution CAS does NOT illuminate. One at a time, fail each individual heater, verify loss of each heater individually activates the L STALL HEAT FAIL caution CAS. Open the L STALL HEAT circuit breaker.

CAUTION: To prevent damage, ensure in air heat is on no longer than 20 seconds.

Note: It may require cycling the power between each heater test to ensure the time limit is not exceeded. If power has to be cycled, ensure the heater has time to cool down before turning the power back on.

(viii) Put the aircraft in the weight-on-wheels configuration.

(ix) Set up the Right Stall Heaters to be able to induce a failure of each individual heater (Pins 2P423-A, 2P423-C, 2P425-A and 2P425-C).

(x) Close the R STALL HEAT circuit breaker. Verify there is no R STALL HEAT FAIL caution CAS. One at a time, fail each individual heater, verify loss of each heater individually activates the R STALL HEAT FAIL caution CAS. Open the R STALL HEAT circuit breaker.

CAUTION: To prevent damage, ensure ground heat is on no longer than 5 minutes.

(xi) Put the aircraft in the weight-off-wheels configuration.

(xii) Push in the circuit breaker labeled R STALL HEAT. Verify there is no R STALL HEAT FAIL CAS. One at a time fail each individual heater, verify loss of each heater individually activates the R STALL HEAT FAIL CAS. Pull the R STALL HEAT circuit breaker.

CAUTION: To prevent damage, ensure in air heat is on no longer than 20 seconds.

Note: It may require cycling the power between each heater test to ensure the time limit is not exceeded. If power has to be cycled, ensure the heater has time to cool down before turning the power back on.

(xiii) Set the PITOT STALL HT switch to off.

(b) Stall Heat Operational Check

(i) Put the aircraft in the weight-on-wheels configuration.

(ii) Open the following circuit breakers: L STALL HEAT, R STALL HEAT, L PITOT HEAT, R PITOT HEAT, L PITOT HT CTRL, and R PITOT HT CTRL.

(iii) Verify the LEFT WOW and RIGHT WOW circuit breakers are closed.

(iv) With the PITOT STALL HT switch off, verify the PITOT HEAT OFF caution CAS is present.

(v) Set the PITOT STALL HT switch to ON. Verify that the PITOT HEAT OFF caution CAS message extinguishes. Verify the R STALL HT FAIL and L STALL HT FAIL CAS messages illuminate.

(vi) Close the R PITOT HT CTRL and L STALL HEAT circuit breakers.

(vii) Verify the R STALL HT FAIL and L STALL HT FAIL CAS messages extinguish. Verify that temperature rises on the left lift transducer, note temperature. Open the L STALL HEAT circuit breaker.

CAUTION: To prevent damage, ensure ground heat is on for no longer than 5 minutes.

(viii) Push IN the circuit breaker labeled R STALL HEAT. Verify that the corresponding CAS message extinguishes. Verify that temperature rises on the right lift transducer, note the temperature. Pull the R STALL HEAT CB.

CAUTION: To prevent damage, ensure ground heat is on for no longer than 5 minutes.

(ix) Actuate the left and right weight on wheels switches to simulate weight OFF wheels.

(x) Push IN the circuit breaker labeled L STALL HEAT. Verify that the corresponding CAS message extinguishes. Verify that the temperature rises on the left lift transducer, note the temperature. Pull the L STALL HEAT circuit breaker.

CAUTION: To prevent damage, ensure ground heat is on for no longer than 5 minutes.

(xi) Push IN the circuit breaker labeled R STALL HEAT. Verify that the corresponding CAS message extinguishes. Verify that temperature rises on

the right lift transducer, note the temperature. Pull the R STALL HEAT circuit breaker.

CAUTION: To prevent damage, ensure ground heat is on for no longer than 5 minutes.

(xii) Press the Pitot Stall HT switch to OFF.

(xiii) Verify the temperature noted in Step (iv) is less than the temperature noted in Step (viii), and the temperature noted in Step (v) is less than the temperature noted in Step (vii).

(4) Pitot Heat (SN: K003 - K055 without SB-0035)

(a) Pitot Heat Ground Mode

(i) Begin this sequence with aircraft weight-on-wheels and the following circuit breakers open: L STALL HEAT, R STALL HEAT, L PITOT HEAT, R PITOT HEAT, L PITOT HT CTRL, and R PITOT HT CTRL.

(ii) Verify the LEFT WOW and RIGHT WOW circuit breakers are closed.

(iii) With the PITOT STALL HT switch off, verify that the CAS message PITOT HEAT OFF is present.

(iv) Set the PITOT STALL HT switch to ON. Verify the PITOT HEAT OFF CAS message extinguishes. Verify the LEFT PITOT HT FAIL and RIGHT PITOT HT FAIL CAS messages appear.

(v) Close the R PITOT HT CTRL and R PITOT HEAT circuit breakers. Verify the LEFT PITOT HT FAIL and RIGHT PITOT HT FAIL CAS messages extinguish. Verify the right and left Pitot tubes begin to heat up, note the temperature. Open the R PITOT HEAT circuit breaker.

CAUTION: To prevent damage, ensure ground heat is on for no longer than 5 minutes.

(vi) Set the PITOT STALL HT Switch to off.

(b) Pitot Heat Air Mode

(i) Begin this sequence with aircraft weight-off-wheels and the following circuit breakers open: L STALL HEAT, R STALL HEAT, L PITOT HEAT, R PITOT HEAT, L PITOT HT CTRL, and R PITOT HT CTRL.

(ii) Verify the LEFT WOW and RIGHT WOW circuit breakers are closed.

(iii) With the Pitot Stall HT switch OFF, verify that the CAS message PITOT HEAT OFF is present.

(iv) Press the Pitot Stall HT switch. Verify the PITOT HEAT OFF CAS message extinguishes. Verify the L PITOT HT FAIL and R PITOT HT FAIL CAS messages appear.

(v) Push IN the R PITOT HT CTRL and R PITOT HEAT circuit breakers. Verify the R PITOT HT FAIL CAS message extinguishes. Verify the Right Pitot tube begins to heat up, note the temperature. Pull the R PITOT HEAT circuit breaker.

CAUTION: To prevent damage, ensure ground heat is on for no longer than 5 minutes.

(vi) Push IN the L PITOT HT CTRL and L PITOT HEAT circuit breakers. Verify the L PITOT HT FAIL CAS message extinguishes. Verify the Left Pitot tube begins to heat up, note the temperature. Pull the L PITOT HEAT circuit breaker.

CAUTION: To prevent damage, ensure ground heat is on for no longer than 5 minutes.

(vii) Press the Pitot Stall HT Switch to OFF.

(viii) Verify the temperatures noted in the Pitot Heat Ground Mode Section are less than the temperatures noted in this section.

(5) Stall Heater Fail Annunciation Verification and Functional Check (SN: K056 and On and K003 - K055 with SB-0035)

Note: The Stall Heater Fail messages require a calibration which is done during the Garmin Software Loading. Do the following checks to verify the calibration was completed and is functioning properly.

Note: A breakout box is needed to simulate engine Ng speed. Contact Epic Aircraft for more information: customersupport@epicaircraft.com

(a) Make sure the aircraft is in the weight-on-wheels configuration.

(b) Make sure the L STALL HEAT, R STALL HEAT, L PITOT HEAT and R PITOT HEAT circuit breakers are pulled.

(c) Make sure the L PITOT CTRL and R PITOT CTRL circuit breakers are in.

(d) Remove access panels 5LW and 5RW to gain access to the left and right lift transducers (refer to Chapter 6-00).

(e) Disconnect electrical connectors 1P423, 1P425, and P577 from the left lift transducer and supplemental heater and 2P423, 2P425, and P578 from the right lift transducer and supplemental heater. Install jumper pins between each connector pin and the corresponding pin on the lift transducer and supplemental heater.

Note: Jumpers on pins 1P423-A, 1P423-C, 1P425-A, 1P425-C, 1P577-B, 2P423-A, 2P423-C, 2P425-A, 2P425-C and 2P577-B will be disconnected to simulate failure of each individual heater.

(f) Gain access to the left and right OAT probe electrical connectors (refer to Chapter 34-10). Install an OAT Manual Temperature Adjuster on the OAT 1 (1P299) and OAT 2 (2P299) electrical connectors.

(g) Set up NG to indicate greater than 4% as follows:

(i) Open the MFD circuit breaker.

(ii) Remove the MFD (refer to Chapter 34-40).

(iii) Connect the breakout box to the GEA 71B.

(h) Connect a ground power unit to the airplane (refer to Chapter 24-40).

(i) Set the BATT 1 and BATT 2 switches to ON.

Note: With the MFD removed, the PFDs will automatically default to reversionary mode.

(j) On the breakout box, set the Ng indication to greater than 4%.

(k) LH Ground Mode Hot Test

(i) Set OAT 1 and 2 to greater than 10°C and within 3°C of each other.

(ii) Reset the L STALL HEAT and R STALL HEAT circuit breakers.

CAUTION: To prevent damage, make sure ground heat is not on for more than 5 minutes.

(iii) Set the PITOT STALL HT switch to ON.

(iv) Make sure there is no L STALL HEAT FAIL CAS.

(v) Fail each primary stall heater by disconnecting jumpers on pins 1P423-A, 1P423-C, 1P425-A, and 1P425-C one at a time to verify the loss of each heater individually activates the L STALL HEAT FAIL CAS.

(vi) Disconnect the jumper on pin P577-B and verify the loss of the supplemental stall heater does not activate the L STALL HEAT FAIL CAS.

(vii) Set the PITOT STALL HT switch to off.

(l) LH Ground Mode Cold Test

(i) Set OAT 1 and 2 to less than 10°C and within 3°C of each other.

CAUTION: Make sure the left and right stall heaters have cooled completely before proceeding.

CAUTION: To prevent damage, make sure ground heat is not on for more than 5 minutes.

(ii) Set the PITOT STALL HT switch to ON.

(iii) Make sure there is no L STALL HEAT FAIL CAS.

(iv) Fail each primary and supplemental stall heater by disconnecting jumpers on pins 1P423-A, 1P423-C, 1P425-A, 1P425-C, and P577-B one at a time to verify the loss of each heater individually activates the L STALL HEAT FAIL CAS.

(v) Set the PITOT STALL HT switch to off.

(m) LH Air Mode Cold Test

(i) Set OAT 1 and 2 to less than 10°C and within 3°C of each other.

(ii) Set the aircraft to the weight-off-wheels configuration.

CAUTION: Make sure the left and right stall heaters have cooled completely before proceeding.

CAUTION: To prevent damage, make sure in-air heat is on no longer than 20 seconds.

(iii) Set the PITOT STALL HT switch to ON.

(iv) Make sure there is no L STALL HEAT FAIL CAS.

(v) Fail each primary and supplemental stall heater by disconnecting jumpers on pins 1P423-A, 1P423-C, 1P425-A, 1P425-C, and P577-B one at a time to verify the loss of each heater individually activates the L STALL HEAT FAIL CAS.

(vi) Set the PITOT STALL HT switch to off.

(n) LH Air Mode Hot Test

(i) Set OAT 1 and 2 to greater than 10°C and within 3°C of each other.

(ii) Make sure the aircraft is still in the weight-off-wheels configuration.

CAUTION: Make sure the left and right stall heaters have cooled completely before proceeding.

CAUTION: To prevent damage, make sure in-air heat is on no longer than 20 seconds.

(iii) Set the PITOT STALL HT switch to ON.

(iv) Make sure there is no L STALL HEAT FAIL CAS.

(v) Fail each primary stall heater by disconnecting jumpers on pins 1P423-A, 1P423-C, 1P425-A, and 1P425-C one at a time to verify the loss of each heater individually activates the L STALL HEAT FAIL CAS.

(vi) Disconnect the jumper on pin P577-B and verify the loss of the supplemental stall heater does not activate the L STALL HEAT FAIL CAS

(vii) Set the PITOT STALL HT switch to off.

(o) RH Ground Mode Hot Test

(i) Set OAT 1 and 2 to greater than 10°C and within 3°C of each other.

(ii) Reset the L STALL HEAT and R STALL HEAT circuit breakers.

CAUTION: To prevent damage, make sure ground heat is not on for more than 5 minutes.

(iii) Set the PITOT STALL HT switch to ON.

(iv) Make sure there is no R STALL HEAT FAIL CAS.

(v) Fail each primary stall heater by disconnecting jumpers on pins 2P423-A, 2P423-C, 2P425-A, and 2P425-C one at a time to verify the loss of each heater individually activates the R STALL HEAT FAIL CAS.

(vi) Disconnect the jumper on pin P578-B and verify the loss of the supplemental stall heater does not activate the R STALL HEAT FAIL CAS.

(vii) Set the PITOT STALL HT switch to off.

(p) RH Ground Mode Cold Test

(i) Set OAT 1 and 2 to less than 10°C and within 3°C of each other.

CAUTION: Make sure the left and right stall heaters have cooled completely before proceeding.

CAUTION: To prevent damage, make sure ground heat is not on for more than 5 minutes.

(ii) Set the PITOT STALL HT switch to ON.

(iii) Make sure there is no R STALL HEAT FAIL CAS.

(iv) Fail each primary and supplemental stall heater by disconnecting jumpers on pins 2P423-A, 2P423-C, 2P425-A, 2P425-C, and P578-B one at a time to verify the loss of each heater individually activates the R STALL HEAT FAIL CAS.

(v) Set the PITOT STALL HT switch to off.

(q) RH Air Mode Cold Test

(i) Set OAT 1 and 2 to less than 10°C and within 3°C of each other.

(ii) Set the aircraft to the weight-off-wheels configuration.

CAUTION: Make sure the left and right stall heaters have cooled completely before proceeding.

CAUTION: To prevent damage, make sure in-air heat is on no longer than 20 seconds.

(iii) Set the PITOT STALL HT switch to ON.

(iv) Make sure there is no R STALL HEAT FAIL CAS.

(v) Fail each primary and supplemental stall heater by disconnecting jumpers on pins 2P423-A, 2P423-C, 2P425-A, 2P425-C, and P578-B one at a time to verify the loss of each heater individually activates the R STALL HEAT FAIL CAS.

(vi) Set the PITOT STALL HT switch to off.

(r) RH Air Mode Hot Test

(i) Set OAT 1 and 2 to greater than 10°C and within 3°C of each other.

(ii) Make sure the aircraft is still in the weight-off-wheels configuration.

CAUTION: Make sure the left and right stall heaters have cooled completely before proceeding.

CAUTION: To prevent damage, make sure in-air heat is on no longer than 20 seconds.

(iii) Set the PITOT STALL HT switch to ON.

(iv) Make sure there is no R STALL HEAT FAIL CAS.

(v) Fail each primary stall heater by disconnecting jumpers on pins 2P423-A, 2P423-C, 2P425-A, and 2P425-C one at a time to verify the loss of each heater individually activates the L STALL HEAT FAIL CAS.

(vi) Disconnect the jumper on pin P578-B and verify the loss of the supplemental stall heater does not activate the R STALL HEAT FAIL CAS

(vii) Set the PITOT STALL HT switch to off.

(s) Set the BATT 1 and BATT 2 switches to off.

(t) Disconnect the ground power unit from the airplane (refer to Chapter 24-40).

(u) Remove OAT Manual Temperature Adjusters on the OAT 1 (left) and OAT 2 (right) electrical connectors. Reinstall the left and right OAT probes (refer to Chapter 34-10).

(v) Remove all jumper pins and reconnect electrical connectors 1P423, 1P425, and P577 to the left lift transducer and supplemental heater and 2P423, 2P425, and P578 to the right lift transducer and supplemental heater.

(w) Remove the breakout box from the GEA 71B.

(x) Install the MFD (refer to Chapter 34-40) and reset the MFD circuit breaker.

(y) Install access panels 5LW and 5RW (refer to Chapter 6-00).

(6) Pitot Heat Ground and Air Mode Check
(SN: K056 and On and K003 - K055 with SB-0035)

(a) Make sure the aircraft is in the weight-on-wheels configuration.

(b) Make sure the L STALL HEAT, R STALL HEAT, L PITOT HEAT, and R PITOT HEAT circuit breakers are out.

(c) Gain access to the left and right OAT probe electrical connectors (refer to Chapter 34-10). Install an OAT Manual Temperature Adjuster on the OAT 1 (1P299) and OAT 2 (2P299) electrical connectors.

(d) Set up NG to indicate greater than 4% as follows:

(i) Open the MFD circuit breaker.

(ii) Remove the MFD (refer to Chapter 34-40).

(iii) Connect the breakout box to the GEA 71B.

(e) Connect a ground power unit to the airplane (refer to Chapter 24-40).

(f) Set the BATT 1 and BATT 2 switches to ON.

Note: With the MFD removed, PFDs will automatically default to reversionary mode.

(g) On the breakout box, set the Ng indication to greater than 4%.

(h) With the PITOT STALL HT switch off, verify that the CAS message PITOT HEAT OFF is present.

(i) Make sure OAT 1 and OAT 2 indicate greater than 10°C.

CAUTION: To prevent damage to the pitot tubes, ensure ground heat is on for no longer than 5 minutes.

(j) Set the PITOT STALL HT switch to ON.

(k) Make sure the PITOT HEAT OFF CAS message extinguishes and the LEFT PITOT HT FAIL and RIGHT PITOT HT FAIL CAS messages do not appear.

(l) Set the PITOT STALL HT switch to off.

(m) Set the OAT 1 and OAT 2 to indicate less than 10°C.

(n) Set the PITOT STALL HT switch to ON.

(o) Make sure the PITOT HEAT OFF CAS message extinguishes and the LEFT PITOT HT FAIL and RIGHT PITOT HT FAIL CAS messages appear.

(p) Reset the R PITOT HEAT circuit breaker.

(q) Make sure the LEFT PITOT HT FAIL and RIGHT PITOT HT FAIL CAS messages extinguish and the left and right pitot tubes begin to heat up. Note the temperature of the pitot tubes.

(r) Pull the R PITOT HEAT circuit breaker.

(s) Set the OAT 1 and OAT 2 to indicate greater than 10°C.

(t) Reset the R PITOT HEAT circuit breaker.

(u) Make sure the left and right pitot tubes do not heat up.

(v) Set the PITOT STALL HT Switch to off.

(w) Set the aircraft is in the weight-off-wheels configuration.

(x) Make sure the L STALL HEAT, R STALL HEAT, L PITOT HEAT, and R PITOT HEAT circuit breakers are out.

(y) With the PITOT STALL HT switch off, verify that the CAS message PITOT HEAT OFF is present.

(z) Set the PITOT STALL HT switch to ON.

(aa) Make sure the PITOT HEAT OFF CAS message extinguishes and the L PITOT HT FAIL and R PITOT HT FAIL CAS messages appear.

CAUTION: To prevent damage, ensure in-air heat is on for no longer than 20 seconds.

(ab) Reset the R PITOT HEAT circuit breaker.

(ac) Make sure the R PITOT HT FAIL CAS message extinguishes and the right pitot tube begins to heat up. Note the temperature of the right pitot tube.

(ad) Pull the R PITOT HEAT circuit breaker.

(ae) Reset the L PITOT HEAT circuit breaker.

(af) Make sure the L PITOT HT FAIL CAS message extinguishes and the left pitot tube begins to heat up. Note the temperature of the left pitot tube.

(ag) Pull the L PITOT HEAT circuit breaker.

(ah) Set the PITOT STALL HT Switch to off.

(ai) Make sure the temperatures noted in step (q) is less than the temperatures noted in steps (ac) and (af).

(aj) Set the BATT 1 and BATT 2 switches to off.

(ak) Reset the L STALL HEAT, R STALL HEAT, L PITOT HEAT, and R PITOT HEAT circuit breakers.

(al) Disconnect the ground power unit from the airplane (refer to Chapter 24-40).

(am) Remove the breakout box from the GEA 71B.

(an) Install the MFD (refer to Chapter 34-40) and reset the MFD circuit breaker.

(ao) Remove OAT Manual Temperature Adjusters on the OAT 1 (left) and OAT 2 (right) electrical connectors.

(ap) Reinstall the left and right OAT probes (refer to Chapter 34-10).

This Page Intentionally Left Blank

WINDSHIELD

1. Description

Prevention and removal of ice on the windshield is done by blowing warm air from engine p3 over critical areas required by the pilot for safe operation of the airplane and expected to be subjected to water droplets.

2. Maintenance Practices

A. Windshield De-Ice Exhaust Manifold

(1) Removal

(a) Remove the upper cowling (refer to Chapter 71-10).

(b) Disconnect the hose from the solenoid shutoff valve.

(c) Remove the solenoid shutoff valve.

(d) Remove the elbow fitting.

(e) Remove the four screws attaching the windshield de-ice exhaust manifold to the fuselage.

(f) Remove the windshield de-ice exhaust manifold.

(g) Examine the gasket installed between the windshield de-ice exhaust manifold and the fuselage for condition. Replace the gasket only if it is warped, damaged, and.or torn or if the seal formed by the RTV sealant is compromised.

(h) If the gasket needs to be replaced, remove all RTV sealant that remains after removal of the gasket.

(2) Installation

(a) If the gasket was removed for condition, install a new gasket. Prior to installation of the gasket and the windshield de-ice exhaust manifold, place an approximately 3/16" bead of high temp RTV silicone on fuselage mating surface where indicated by bold line in the following figure.

(b) Install the windshield de-ice exhaust manifold.

i. If the gasket is being replaced. Install and torque fasteners within 1 hour of placing the bead (wet install) of RTV sealant between the gasket and the fuselage. The fuselage-to-manifold gasket must be fully sealed on the three sides indicated.

ii. If the gasket is sound, install windshield de-ice exhaust manifold.

(c) Install the elbow fitting on the manifold. Torque the fitting to 360-400 in-lbs.

(d) Install the solenoid shutoff valve.

(e) Reconnect the hose to the solenoid shut off valve.

(f) Install the upper cowling (refer to Chapter 71-10).

(3) Operational Check

(a) Connect external electrical power to the airplane (refer to Chapter 24-40).

(b) Set the BATT 1 and BATT 2 switches to ON.

(c) Windshield Heat Control Checks:

WARNING: Do not exceed 80 psi shop air.

(i) With WSH HEAT CB pulled out, press WSH HEAT switch. Verify there is no air flow over the windshield.

(ii) Return the WSH Heat switch to the off position.

(iii) Connect shop air upstream of the windshield de-ice solenoid valve.

(iv) Make sure the WSH HEAT circuit breaker closed.

(v) Set the WSH HEAT switch to ON.

(vi) Make sure there is airflow through the manifold tubes.

(vii) Make sure the WSH HEAT ON CAS message illuminates.

(viii) Set the WSH HEAT switch to off.

(ix) Make sure the WSH HEAT ON CAS messages extinguishes.

(x) Disconnect shop air from the airplane.

(d) Windshield Heat Monitor Checks:

(i) Make sure OAT is indicated as greater than 5°C.

(ii) Set the WSH HEAT switch to ON.

(iii) Make sure the WSH TEMP ON CAS message illuminates.

(iv) Make sure approximately 30 seconds after the WSH TEMP ON CAS Caution message extinguishes and the WSH TEMP ON CAS Warning message illuminates.

(v) Set the WSH HEAT switch to off.

(vi) Make sure the WSH TEMP ON CAS Warning message extinguishes.

(e) Set the BATT 1 and BATT 2 switches to off.

(f) Disconnect external electrical power from the airplane (refer to Chapter 24-40).

Figure 30-40.1: Windshield De-Ice Exhaust Manifold (Sheet 1 of 3)

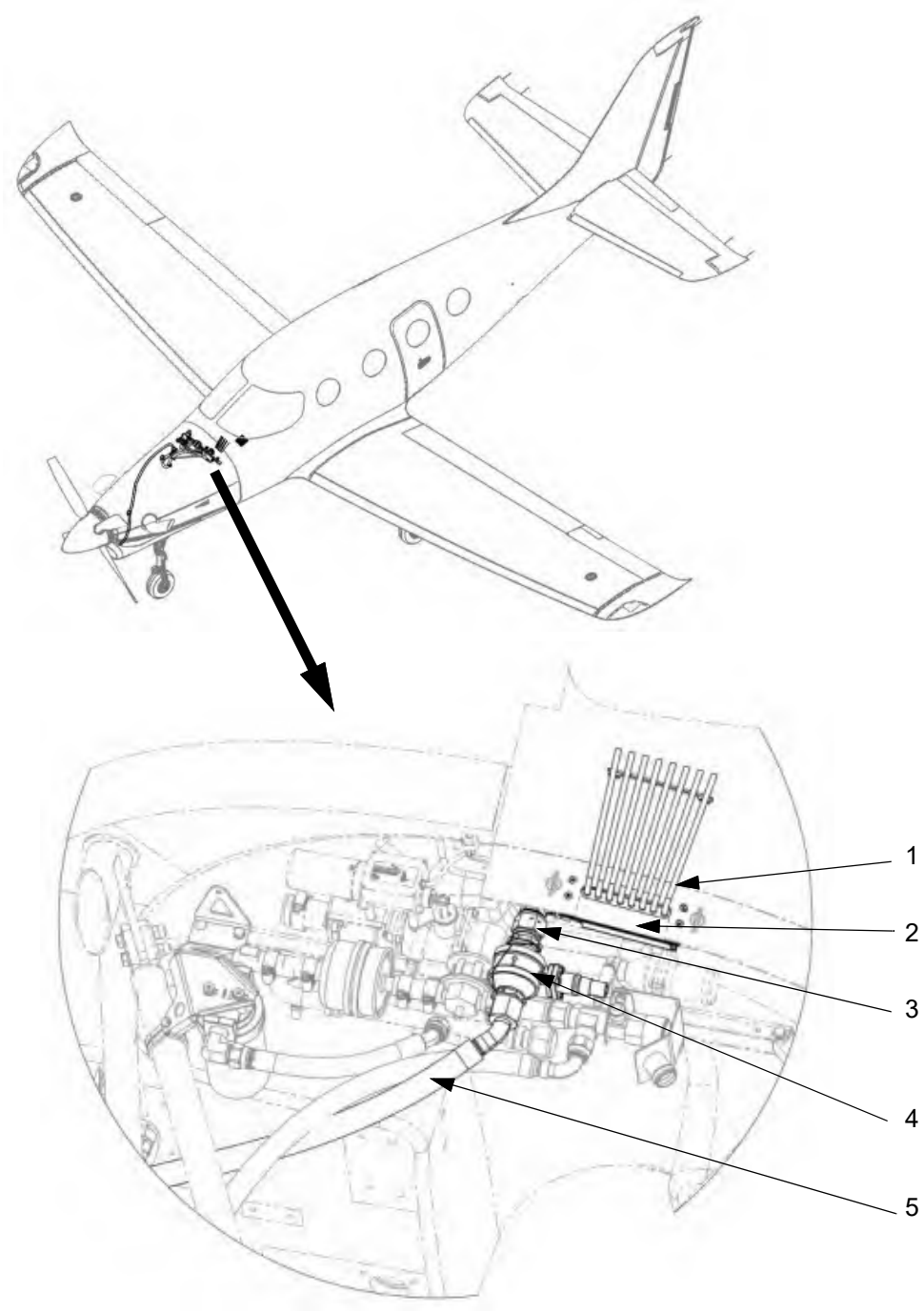

LEGEND
1. Windshield De-Ice Exhaust Manifold
2. Gasket
3. Elbow
4. Solenoid Shutoff Valve
5. Hose

Figure 30-40.1: Windshield De-Ice Exhaust Manifold (Sheet 2 of 3)

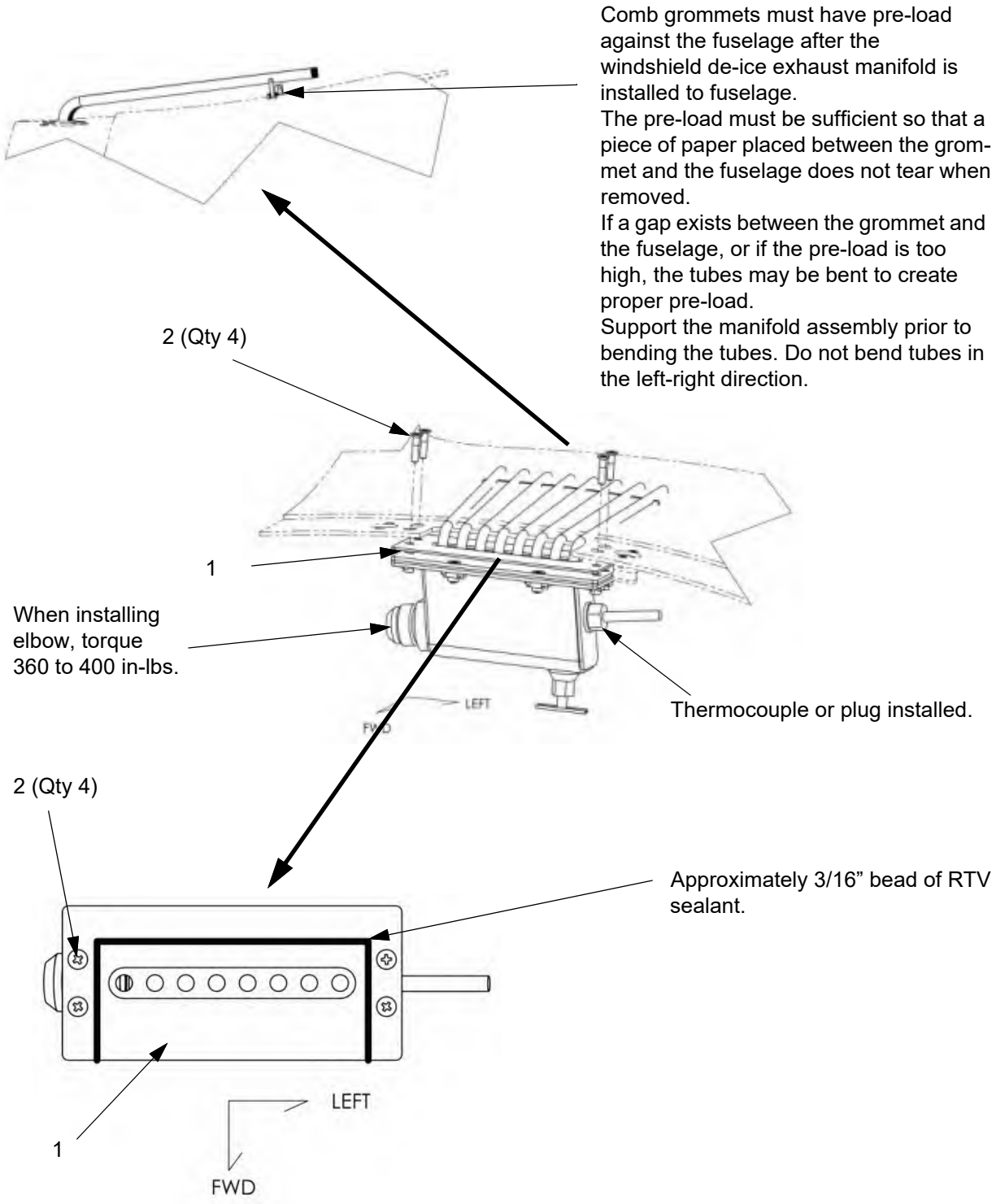

LEGEND
1. Gasket
2. Screw

Figure 30-40.1: Windshield De-Ice Exhaust Manifold (Sheet 3 of 3)

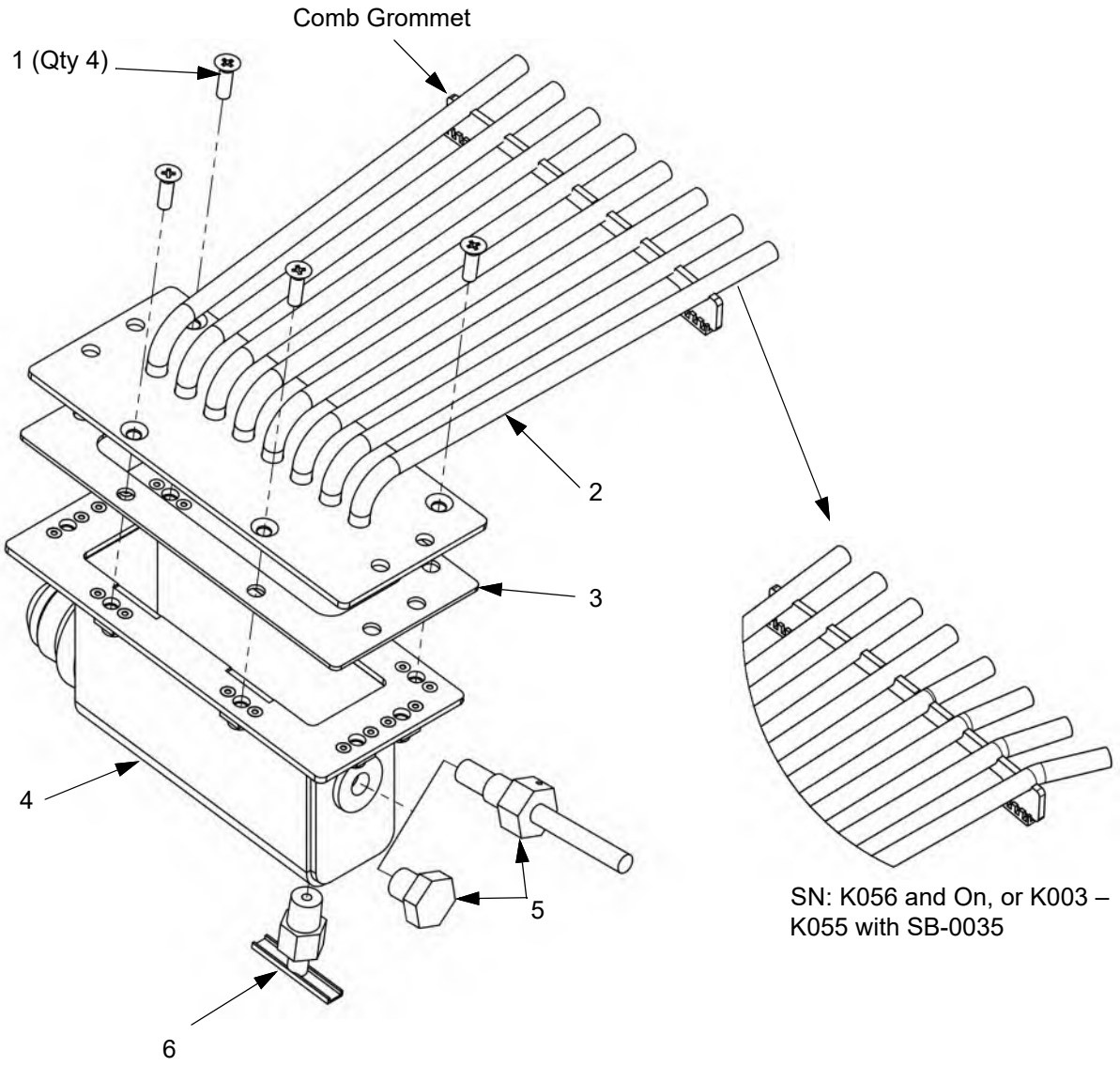

LEGEND
1. Screw
2. Tube Assembly
3. Seal
4. Manifold
5. Thermocouple, Plug, or Blank
6. Drain Cock

This Page Intentionally Left Blank

PROPELLER

1. Description

The propeller de-ice system is a controller (timer and sequencer), electrical slip rings, brush block assembly, and electrical heating elements encased in blade mounted boots. The controller alternates electricity to the boots letting them heat then cool. This melts the ice layer after it has formed on the blades letting the ice be thrown off by centrifugal force. The boots are installed on the propeller blades by Hartzell Propeller, Inc.

Refer to the current revision of the Hartzell Propeller, Inc. Propeller Ice Protection System Manual (No. 180) for maintenance of propeller mounted and airframe mounted propeller ice protection system components supplied by Hartzell.

2. Maintenance Practices

A. Brush Block

(1) Removal

(a) Remove the cowling (refer to Chapter 71-10).

(b) Disconnect the terminals attached to the brush block. Note the terminal positions for re-installation.

(c) Remove the bolts and washers attaching the brush block to the brush block bracket.

(d) Slowly pull the brush block away from the slip ring to release the pressure on the brushes.

(e) Remove the brush block taking care to protect the brushes from damage.

(2) Installation

(a) Attach the brush block to the brush block bracket leaving the bolts loose so the block can be easily moved for alignment.

(b) Clean the slip rings using MEK, acetone, or spray de-greaser.

(c) View the alignment between the brushes and slip rings from the side then adjust the block so the brushes seat as shown.

(d) Torque each nut to 12-15 in lbs.

Figure 30-60.1: Brush Block (Sheet 1 of 2)

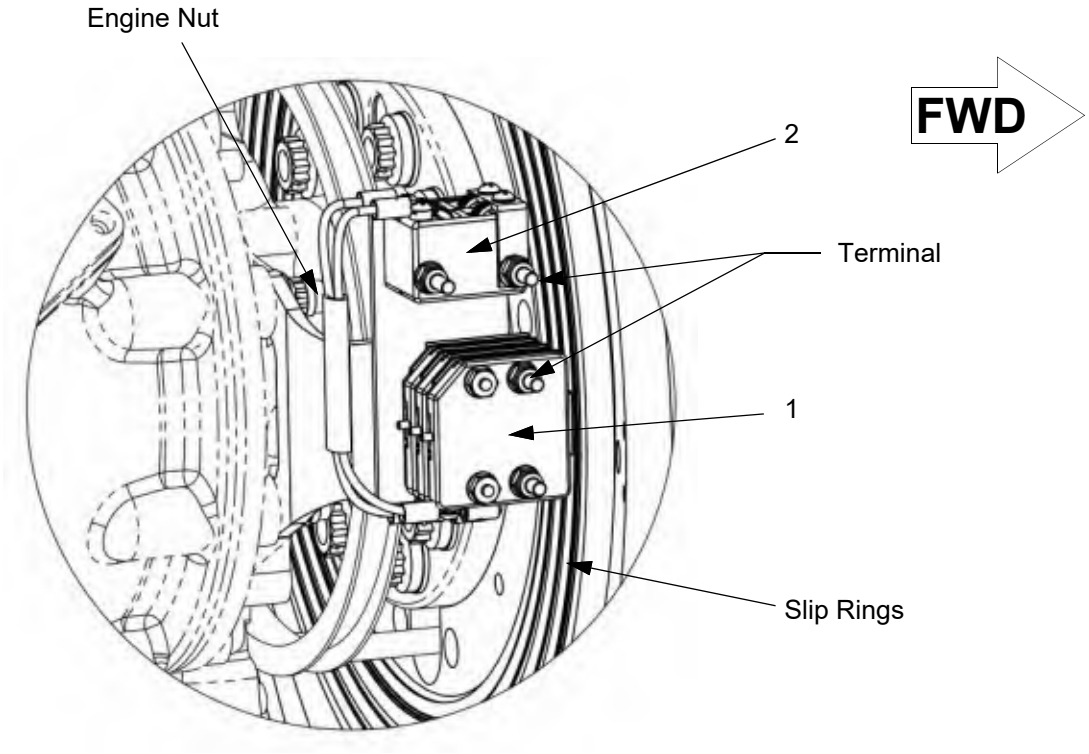

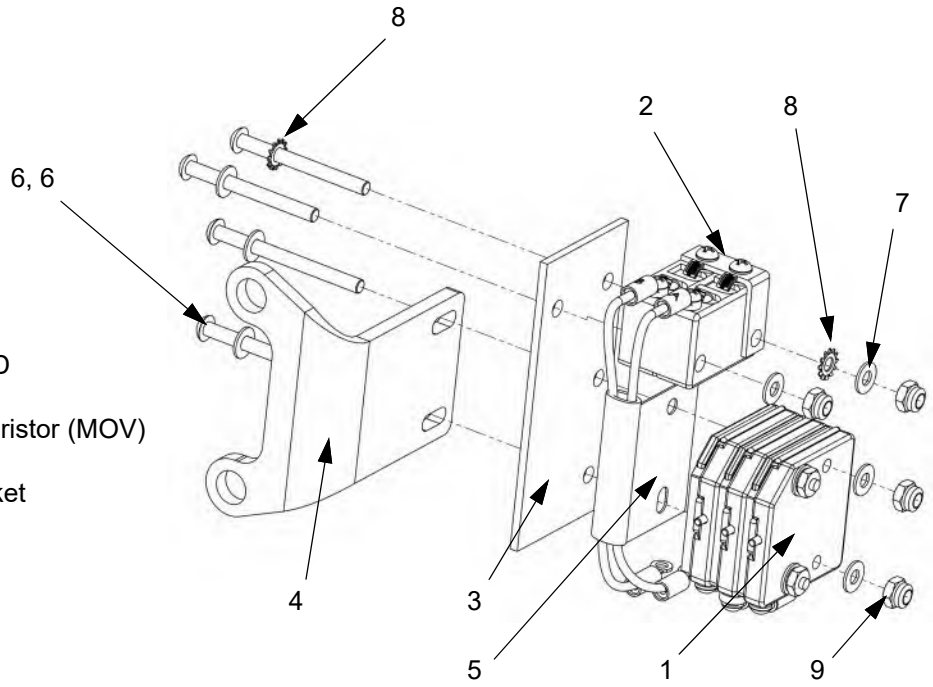

LEGEND

1. Brush Block
2. Metal Oxide Varistor (MOV)
3. Plate
4. Mounting Bracket
5. Shim
6. Screw
7. Washer
8. Star Washer
9. Locknut

Figure 30-60.1: Brush Block (Sheet 2 of 2)

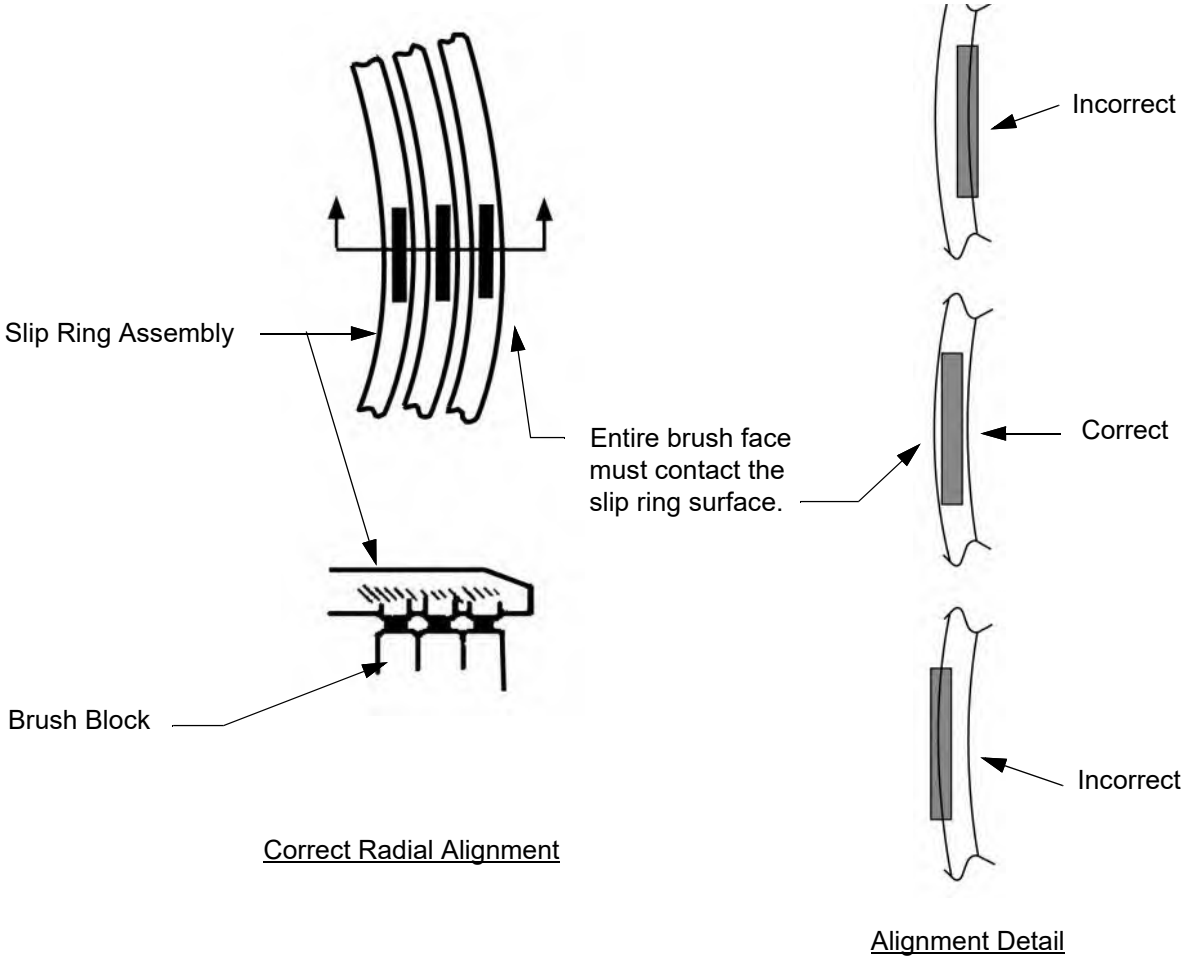

(e) Adjust the position of the brush block as shown below, ensuring the brushes stay correctly radially aligned. Tighten the locknuts 12 to 15 in-lbs.

.

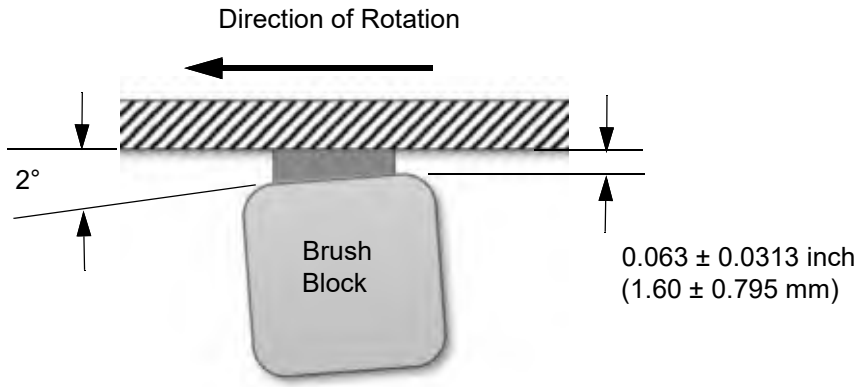

(f) Re-install the terminals using a new star washer under the screw heads. Install the center screw with a nylon spacer under the terminal.

Note: Verify all terminals are not making contact with each other.

(g) Install the cowling (refer to Chapter 71-10).

(3) Brush Replacement

The brushes are not repairable and should be replaced if found to be defective or worn beyond specified limits. Refer to the latest revision of Hartzell Propeller, Inc. Propeller Ice Protection System Component Maintenance Manual (No. 181) for brush replacement procedures.

(4) Inspection

Inspect the brush block at the 100 hour and/or annual inspections. No servicing is required outside of the normal inspection intervals or during routine maintenance. Refer to the latest revision of Hartzell Propeller, Inc. Propeller Ice Protection System Component Maintenance Manual (No. 180) for inspection procedures.

B. Slip Ring

(1) Removal

(a) Remove the cowling (refer to Chapter 71-10).

(b) Remove the brush block.

(c) Remove the propeller (refer to Chapter 61-10).

(d) Remove the slip ring.

(2) Installation

(a) Installation is the reverse of removal.

(3) Inspection

Inspect the slip ring at the 100 hour and/or annual inspections. Do a slip ring run-out check at each slip ring installation, whenever the brush block assembly is replaced, or as needed to troubleshoot a suspected system fault. Refer to the latest revision of Hartzell Propeller, Inc. Propeller Ice Protection System Component Maintenance Manual (No. 181) for inspection procedures.

C. Metal Oxide Varistor (MOV)

Replace the MOV assembly in all cases of lightning strike.

(1) Removal

(a) Remove the cowling (refer to Chapter 71-10).

(b) Disconnect the terminals attached to the MOV. Note the terminal positions for re-installation.

(c) Remove the screws and washers holding the MOV to the brush block bracket.

(d) Remove the MOV.

(2) Installation

(a) Installation is the reverse of removal.

D. Controller

(1) Removal

(a) Set the BATT 1 and BATT 2 switches to OFF.

(b) Disconnect external electrical power from the airplane (refer to Chapter 24-40).

(c) Remove the cowling (refer to Chapter 71-10).

(d) Disconnect the wiring harness from the controller.

(e) Remove the locknuts and washers attaching the controller to the left inertial separator.

(f) Remove the controller.

(2) Installation

(a) Attach the controller to the left inertial separator using washers and locknuts.

(b) Connect the wiring harness to the controller.

(c) Test the de-ice system for correct operation.

(d) Install the cowling (refer to Chapter 71-10).

Figure 30-60.2: Propeller De-Ice Controller (Sheet 1 of 2)

LEGEND

1. Controller
2. Fuse Block
3. Fuse Block Cover
4. Low Voltage Limiter Fuse
5. Mounting Bracket
6. Bolt
7. Washer
8. Locknut
9. Screw

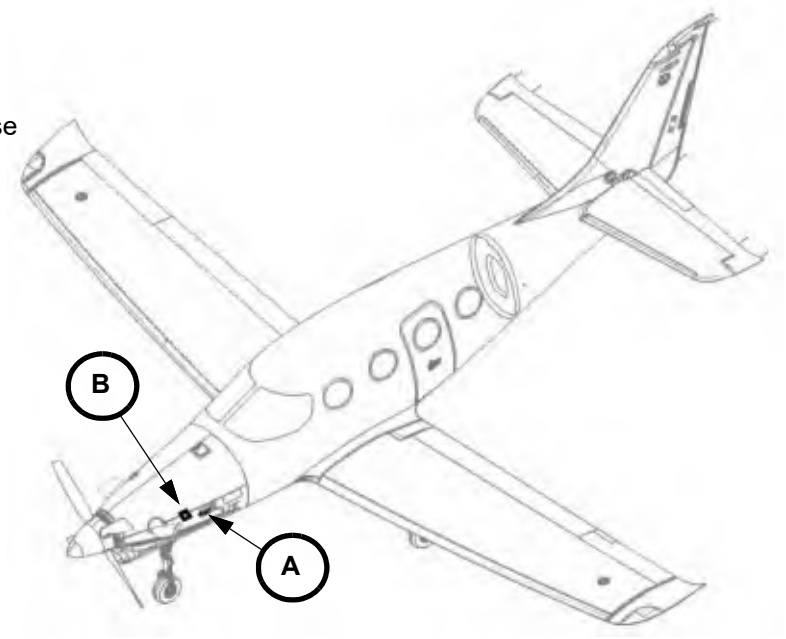

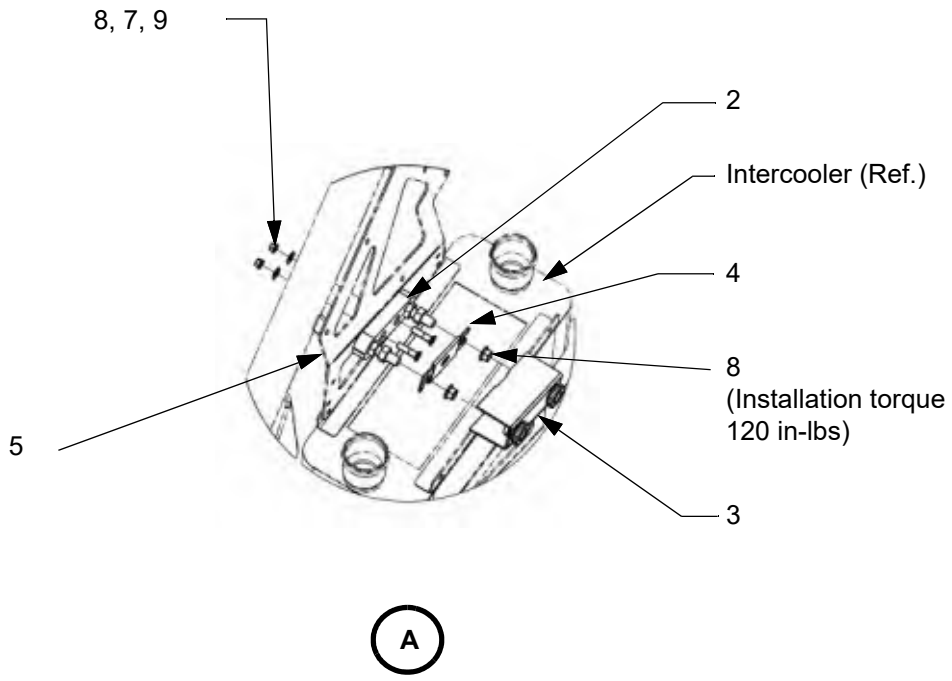

Figure 30-60.2: Propeller De-Ice Controller (Sheet 2 of 2)

LEGEND

1. Controller
2. Fuse Block
3. Fuse Block Cover
4. Low Voltage Limiter Fuse
5. Mounting Bracket
6. Bolt
7. Washer
8. Locknut
9. Screw

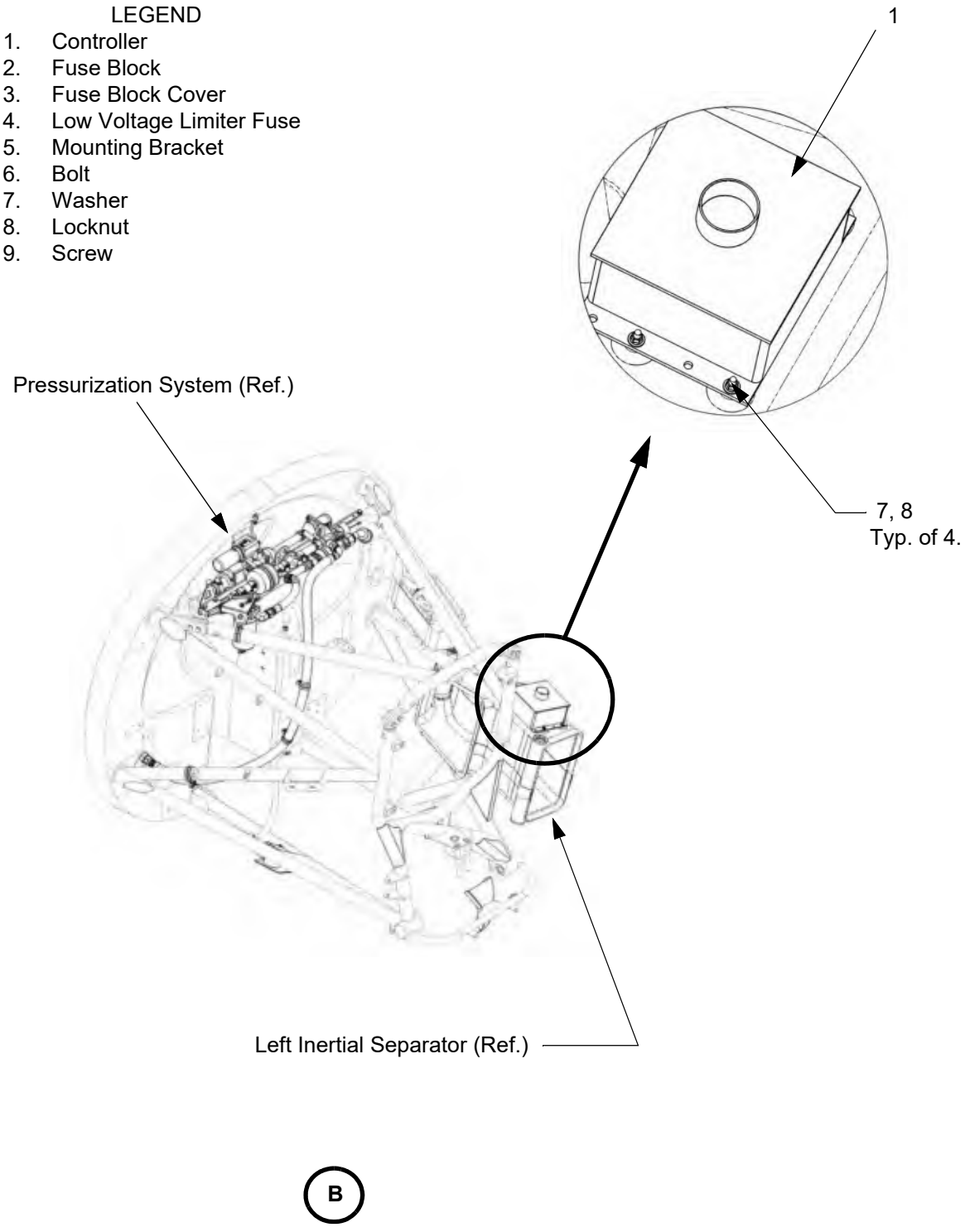

E. Propeller De-Ice Boots (4 Blade)

(1) Removal

(a) Remove the cowling (refer to Chapter 71-10).

(b) Remove the propeller (refer to Chapter 61-10).

(c) Remove the de-ice boot. Refer to the latest revision of Hartzell Propeller, Inc. De-Ice Boot Removal and Installation Manual (No. 180) for removal procedures.

(2) Installation

(a) Install the de-ice boot. Refer to the latest revision of Hartzell Propeller, Inc. De-Ice Boot Removal and Installation Manual (No. 180) for removal procedures.

(b) Install the propeller (refer to Chapter 61-10).

(c) Install the cowling (refer to Chapter 71-10).

(d) Do the Operational Test of the propeller de-ice boots.

(3) Operational Test

Refer to the latest revision of Hartzell Propeller, Inc. Propeller Ice Protection System Component Maintenance Manual (No. 180) for inspection procedures.

Test the operation of the propeller de-ice boots at the 100 hour and/or annual inspections using the following procedure:

Propeller heat has two settings, Fast Mode and Slow Mode. Both modes are activated by temperature. If either of the OAT probes indicates less than 0°C and greater than -16°C, Fast Mode will be activated, and if it indicates less than or equal to -16°C, Slow Mode will be activated. Therefore, to test the prop heat system on the ground, the temperature of a OAT probe must be manipulated.

(a) Make an OAT Manual Temperature Adjuster using the following diagram:

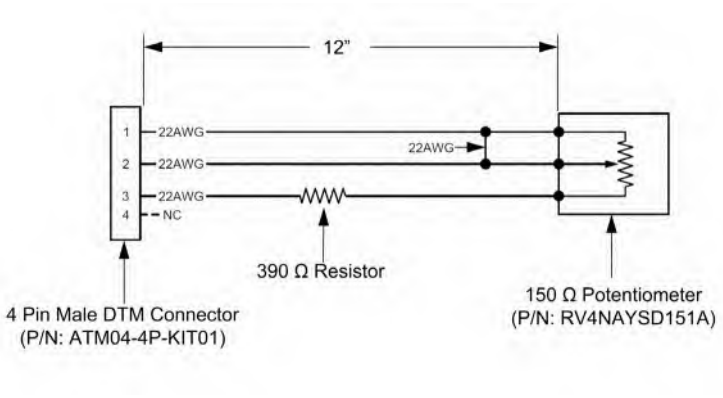

(b) Gain access to the left OAT probe electrical connector (refer to Chapter 34-10).

(c) Install the OAT Manual Temperature Adjuster on the OAT 1 (left) electrical connector.

(d) Connect external electrical power to the airplane (refer to Chapter 24-40).

(e) Set the BATT 1 and BATT 2 switches to ON.

CAUTION: SLOWLY ROTATE THE PROPELLER BY HAND TO PREVENT ARCING DAMAGE TO THE SLIP RING WHEN PERFORMING THE PROPELLER HEAT OPERATIONAL CHECK WITHOUT ENGINE POWER.

(f) Begin manually rotating the propeller.

(g) With both OAT 1 and 2 temperatures indicated above 0°C set the PROP HEAT switch to ON. Make sure all of the propeller blades stay cool.

(h) Set the PROP HEAT switch to off.

(i) Stop rotating the propeller.

(j) For 4 bladed propellers (SN: K003-K010 without SB-0017):

(i) Adjust the OAT Manual Temperature Adjuster until OAT 1 indicates less than 0°C and greater than -16°C.

CAUTION: DO NOT OPERATE THE PROPELLER HEAT FOR MORE THAN ONE CYCLE. OVERHEATING OF THE DE-ICE BOOT CAN CAUSE DAMAGE TO THE PROPELLER BLADES. ALLOW THE BLADES TO COOL COMPLETELY BEFORE REPEATING THIS TEST.

(ii) Begin manually rotating the propeller.

(iii) Make sure the de-ice boots do not heat up before the PROP HEAT switch is set to ON.

(iv) Set the PROP HEAT switch to ON, verify that 2 alternating blades heat up and then cycle to the alternate blades approximately every 45 seconds.

(v) Set the PROP HEAT switch to off. Verify the propeller heat dissipates. Allow the blades to cool completely.

(vi) After the blades are completely cool, adjust the OAT Manual Temperature Adjuster until OAT 1 indicates less than -16°C. Set the PROP HEAT switch to ON, verify that alternating blades heat up and then cycle to the alternate blades approximately every 90 seconds.

(vii) Set the PROP HEAT switch to off. Verify the propeller heat dissipates.

(viii) Set the BATT 1 and BATT 2 switches to off.

(ix) Disconnect external electrical power from the airplane (refer to Chapter 24-40).

(x) Remove the OAT Manual Temperature Adjuster from the left OAT probe and reconnect the electrical connector.

(xi) Reinstall the left OAT probe (refer to Chapter 34-10).

(xii) Test the left OAT probe (refer to the latest revision of the Garmin G1000 NXi Integrated Avionics System Line Maintenance Manual for the Epic E1000, P/N 190-02330-01, section 7.5).

F. Propeller De-Ice Boots (5 Blade)

(1) Removal

(a) Remove the cowling (refer to Chapter 71-10).

(b) Remove the propeller (refer to Chapter 61-10).

(c) Remove the de-ice boot. Refer to the latest revision of Hartzell Propeller, Inc. De-Ice Boot Removal and Installation Manual (No. 180) for removal procedures.

(2) Installation

(a) Install the de-ice boot. Refer to the latest revision of Hartzell Propeller, Inc. De-Ice Boot Removal and Installation Manual (No. 180) for removal procedures.

(b) Install the propeller (refer to Chapter 61-10).

(c) Install the cowling (refer to Chapter 71-10).

(d) Do the Operational Test of the propeller de-ice boots.

(3) Operational Test

Refer to the latest revision of Hartzell Propeller, Inc. Propeller Ice Protection System Component Maintenance Manual (No. 180) for inspection procedures.

Test the operation of the propeller de-ice boots at the 100 hour and/or annual inspections using the following procedure:

Propeller heat has two settings, Fast Mode and Slow Mode. Both modes are activated by temperature. If either of the OAT probes indicates less than 0°C and greater than -16°C, Fast Mode will be activated, and if it indicates less than or equal to -16°C, Slow Mode will be activated. Therefore, to test the prop heat system on the ground, the temperature of a OAT probe must be manipulated.

(a) Make an OAT Manual Temperature Adjuster using the following diagram:

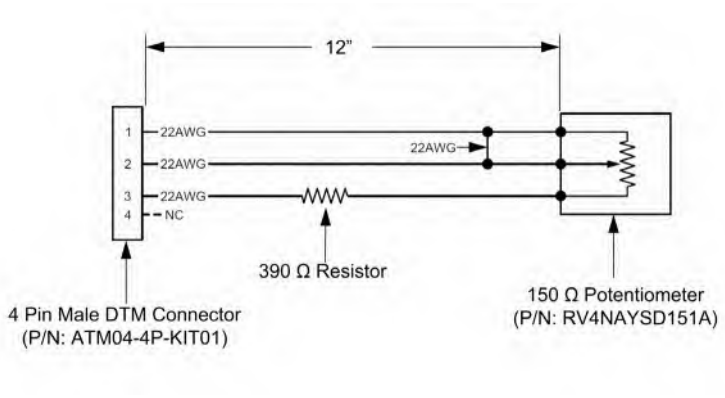

(b) Gain access to the left OAT probe electrical connector (refer to Chapter 34-10).

(c) Install the OAT Manual Temperature Adjuster on the OAT 1 (left) electrical connector.

(d) Connect external electrical power to the airplane (refer to Chapter 24-40).

(e) Set the BATT 1 and BATT 2 switches to ON.

CAUTION: SLOWLY ROTATE THE PROPELLER BY HAND TO PREVENT ARCING DAMAGE TO THE SLIP RING WHEN PERFORMING THE PROPELLER HEAT OPERATIONAL CHECK WITHOUT ENGINE POWER.

(f) Begin manually rotating the propeller.

(g) With both OAT 1 and 2 temperatures indicated above 0°C set the PROP HEAT switch to ON. Make sure all of the propeller blades stay cool.

(h) Set the PROP HEAT switch to off.

(i) Stop rotating the propeller

CAUTION: DO NOT OPERATE THE DE-ICE BOOTS FOR MORE THAN 30 SECONDS WITH COMPOSITE BLADE PROPELLERS WHEN THE ENGINE ISN'T RUNNING. OVERHEATING THE DE-ICE BOOT CAN CAUSE DAMAGE TO THE PROPELLER BLADES. THE SYSTEM MUST BE TESTED WITH THE ENGINE RUNNING.

(j) Set the BATT 1 and BATT 2 switches to off.

(k) Remove the top and side engine cowls (refer to Chapter 71-10).

(l) Disconnect the three heating circuit wires (T121, connected to terminal A; T-122, connected to terminal B: and T123, connected to terminal C) from the brush block assembly.

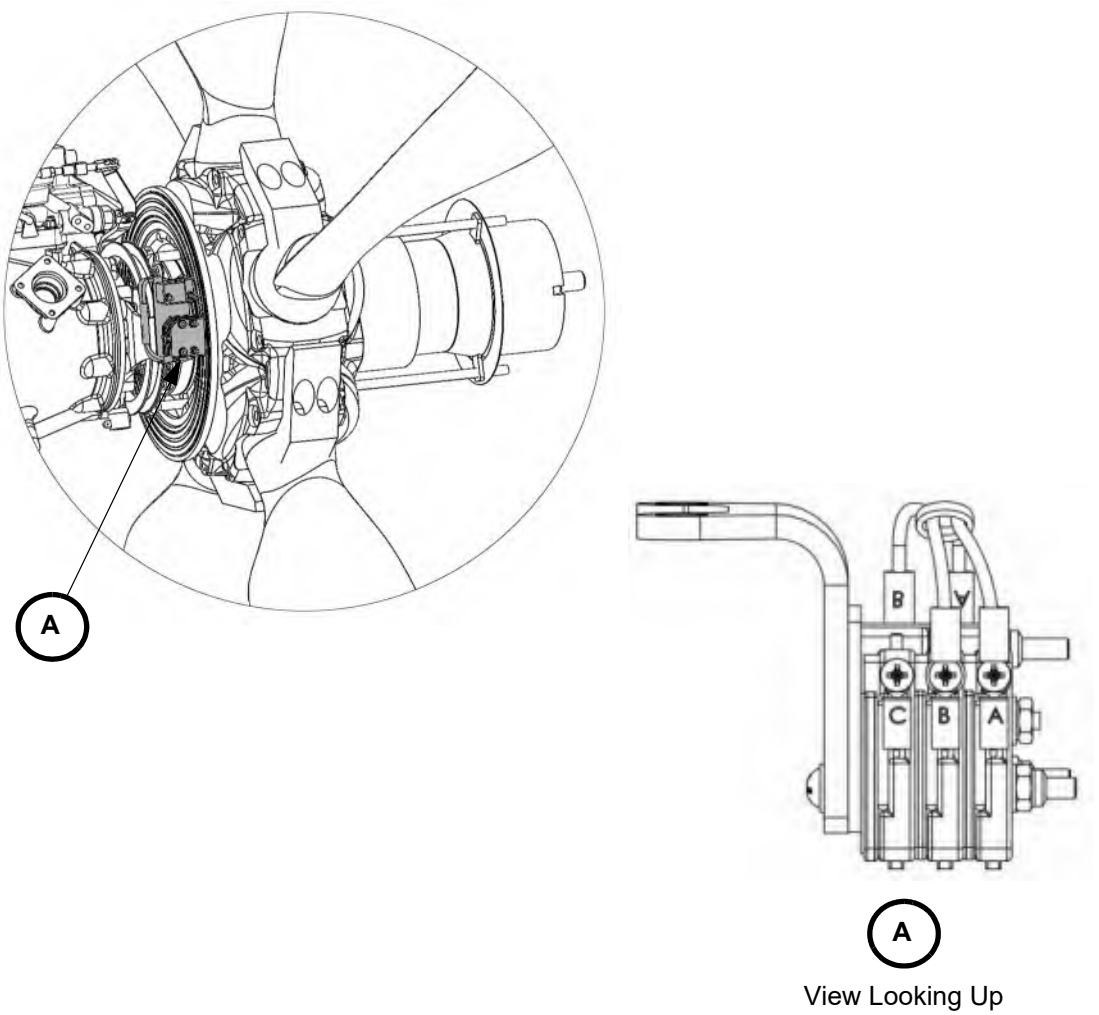

View Looking Up

Note: Two multimeters are needed for this test.

(m) Connect one multimeter to T121 and T123, and the other multimeter to T122 and T123.

(n) Set the BATT 1 and BATT 2 switches to ON.

(o) Adjust the OAT Manual Temperature Adjuster until OAT 1 indicates less than 0°C and greater than -16°C to test the fast mode.

Note: Both multimeters will indicate electrical system voltage with the PROP HEAT switch off. Electrical system voltage may vary slightly depending on the ground power unit voltage.

(p) Set the PROP HEAT switch to ON.

(q) Make sure one multimeter indicates approximately the BATT voltage that is indicated on the MFD and the other indicates less than the BATT voltage that is indicated on the MFD.

(r) After 45 seconds, make sure the voltage indications transfer between multimeters.

(s) Set the PROP HEAT switch to off.

(t) Adjust the OAT Manual Temperature Adjuster until OAT 1 indicates less than -16°C to test the slow mode.

(u) Set the PROP HEAT switch to ON.

(v) Make sure one multimeter indicates approximately the BATT voltage that is indicated on the MFD and the other indicates less than the BATT voltage that is indicated on the MFD.

(w) After 90 seconds, make sure the voltage indications transfer between multimeters.

(x) Set the PROP HEAT switch to off.

(y) Set the BATT 1 and BATT 2 switches to off.

(z) Connect the three heating circuit wires (T121 to terminal A; T-122 to terminal B: and T123 to terminal C) on the brush block assembly.

(aa) Set the BATT 1 and BATT 2 switches to ON.

(ab) Using a multimeter, make sure there is no voltage present between T121 and T123 or T122 and T123.

(ac) Adjust the OAT Manual Temperature Adjuster until OAT 1 indicates less than 0°C and greater than -16°C to test the fast mode.

(ad) Begin manually rotating the propeller.

(ae) Make sure the de-ice boots do not heat up before the PROP HEAT switch is set to ON.

CAUTION: Do not leave the propeller heat on for more than 30 seconds, damage to the propeller blades may occur.

(af) Set the PROP HEAT switch to ON.

(ag) Make sure the heating element (inboard or outboard) on each propeller blade begins to heat up.

(ah) Set the PROP HEAT switch to off.

(ai) Set the BATT 1 and BATT 2 switches to off.

(aj) Disconnect external electrical power from the airplane (refer to Chapter 24-40).

(ak) Install the top and side engine cowls (refer to Chapter 71-10).

(al) Remove the OAT Manual Temperature Adjuster from the left OAT probe and reconnect the electrical connector.

(am) Reinstall the left OAT probe (refer to Chapter 34-10).

(an) Test the left OAT probe (refer to the latest revision of the Garmin G1000 NXi Integrated Avionics System Line Maintenance Manual for the Epic E1000, P/N 190-02330-01, section 7.5).

This Page Intentionally Left Blank

CHAPTER
31

Indicating/Recording Systems

This Page Intentionally Left Blank

List of Effective Pages

Chapter/Section	Page Number	Effective Date
31-Title	Page 1	02 Jan 2020
31-Title	Page 2	02 Jan 2020
31-LOEP	Page 1	08 Sep 2026
31-LOEP	Page 2	02 Jan 2020
31-TOC	Page 1	08 Sep 2026
31-TOC	Page 2	02 Jan 2020
31-00	Page 1	10 Jul 2025
31-00	Page 2	13 Apr 2020
31-00	Page 3	13 Apr 2020
31-00	Page 4	02 Jan 2020
31-20	Page 1	08 Sep 2026
31-20	Page 2	08 Sep 2026
31-20	Page 3	08 Sep 2026
31-20	Page 4	08 Sep 2026
31-20	Page 5	08 Sep 2026
31-20	Page 6	08 Sep 2026
31-20	Page 7	08 Sep 2026
31-20	Page 8	08 Sep 2026
31-20	Page 9	08 Sep 2026
31-20	Page 10	08 Sep 2026
31-20	Page 11	08 Sep 2026
31-20	Page 12	08 Sep 2026
31-20	Page 13	08 Sep 2026
31-20	Page 14	08 Sep 2026
31-20	Page 15	08 Sep 2026
31-20	Page 16	08 Sep 2026
31-20	Page 17	08 Sep 2026
31-20	Page 18	08 Sep 2026
31-20	Page 19	08 Sep 2026
31-20	Page 20	08 Sep 2026
31-20	Page 21	08 Sep 2026
31-20	Page 22	08 Sep 2026

This Page Intentionally Left Blank

Table of Contents

List of Effective Pages ..... 31-LOEP / Page 1
Table of Contents ..... 31-TOC / Page1

Paragraph **Page Number**

Indicating/Recording Systems

1. General ..... 31-00 / Page 1

Independent Instruments

1. Description ..... 31-20 / Page 1
2. Maintenance Practices ..... 31-20 / Page 1
   - A. Lift Transducer ..... 31-20 / Page 1
   - B. Lift Computer ..... 31-20 / Page 2
   - C. Angle of Attack Gauge ..... 31-20 / Page 3
   - D. Shaker ..... 31-20 / Page 4
   - E. Pusher Servo ..... 31-20 / Page 4
   - F. Stall Prevention System Operational Check ..... 31-20 / Page 9
   - G. Stall Prevention System Tuning ..... 31-20 / Page 10
   - H. Force Gram Applicator Instructions: ..... 31-20 / Page 19
   - I. Annunciation Panel Verification ..... 31-20 / Page 20

This Page Intentionally Left Blank

INDICATING/RECORDING SYSTEMS

1. General

The indicating/recording system on this airplane that provides visual and/or aural warning of conditions in unrelated systems is the stall prevention system.

K003-K085 (except K014), refer to the current revision of the E1000 Wiring Manual, P/N SK05000002.

K014, K086 and on, refer to the current revision of the E1000 Wiring Manual, P/N SK05003002.

2. Troubleshooting

Problem	Probable Cause	Solution
L STALL CMP FAIL or R STALL CMP FAIL CAS Caution Message displays.	SPS CMP 1A, SPS CMP 1B, SPS CMP 2A, and/or SPS CMP 2B circuit breaker pulled	Set circuit breaker
	Lift transducer wiring is disconnected	Check wiring and connectors between the stall computer and the lift transducer, reconnect accordingly.
	left and/or right stall computer has failed	Replace stall computer
L STALL HT FAIL or R STALL HT FAIL CAS Caution Message displays.	L STALL HEAT, R STALL HEAT, L PITOT CTRL, and/or R PITOT CTRL circuit breaker pulled	Set circuit breaker
	One or more stall heater has failed	Check wiring And connectors
		Check the resistance of each heater to verify the elements are intact. If inoperable replace the lift transducer.
	Lift transducer calibration is out	Contact Epic Aircraft, LLC

Problem	Probable Cause	Solution
PUSH MODE FAIL CAS Caution Message displays	SPS COMP 1A, SPS COMP 1B, SPS COMP 2A and/or SPS COMP 2B circuit breaker pulled	Set circuit breaker
	One stall computer has failed	Replace stall computer
	Stall computer entered Ice Mode or High Alt Mode uncommanded	Verify there is an open circuit or high resistance continuity between pin 16 of P410 or P411 to ground in the following conditions: 1. Prop Heat Switch is "OFF". 2. De-Ice Boots Switch is "OFF". 3. Both PFD 1 or PFD 2 indicate an altitude <FL180.
	One or both stall computers is disconnected	Check wiring and connectors
PUSHER OFF CAS caution Message displays	PUSHER Circuit breaker pulled	Set circuit breaker
	Pilot or Copilot A/P Disconnect switch is engaged	Verify S-104 and S-109 are operating correctly.
	Pusher power is interrupted	Verify with the circuit breaker PUSHER IN and both the pilot and copilot A/P DISC switch in the OFF position there is power at P410-14 and P411-11.

Problem	Probable Cause	Solution
With the airplane on the ground the shaker and pusher do not activate when the STALL TEST switch is pressed	SPS CMP 1A, SPS CMP 1B, SPS CMP 2A, SPS CMP 2B, and/or PUSHER circuit breaker pulled	Set circuit breaker
	Weight on Wheels switch defective	Replace switch.
	STALL TEST switch defective	Replace switch.
	Defective pusher servo	Replace pusher servo
	Pusher servo bridal cable loose	Tighten cable
	Defective shaker	Replace shaker
	Shaker disconnected	Reconnect shaker
	Pusher and/or shaker wiring is disconnected	Check wiring and connectors
AoA gauge does not function	Defective AoA gauge	Replace AoA gauge
	Defective lift transducer	Replace lift transducer
	AoA gauge wiring is disconnected	Check wiring and connectors

This Page Intentionally Left Blank

INDEPENDENT INSTRUMENTS

1. Description

The Stall Prevention System (SPS) on this airplane is a lift transducer in the leading edge of each wing connected to individual lift computers. Each lift transducer uses a sensing circuit which generates an electrical output proportional to the deflection of the vane. This gives a continuous display on the pilot and copilot angle of attack gages of the vanes' position and stagnation point.

If either lift computer detects an imminent stall it will activate a shaker attached to the yokes torque tube to notify the pilot and copilot that a response is required. If only one lift computer detects an imminent stall it will generate a shaker response. Both lift computers must detect and imminent stall to generate a pusher response. Should the pilot or copilot not take corrective action the lift computers will automatically activate a pusher servo attached to the elevator, rotating the elevator down and forcing the nose of the airplane down.

2. Maintenance Practices

A. Lift Transducer

Note: Refer to Chapter 30-30 for the supplemental heater.

(1) Removal

(a) Set the BATT 1 and BATT 2 switches to OFF.

(b) Disconnect external electrical power from the airplane (refer to Chapter 24-40).

(c) Remove access panel 5LW or 5RW (refer to Chapter 6), as applicable.

(d) For SN: K056 and on and K003-K055 with SB-0035 aircraft, remove the supplemental heater (refer to Chapter 30-30).

(e) Disconnect the lift transducer from the electrical harness.

(f) Remove the washer head screws attaching the lift transducer to the leading edge of the wing.

(g) Remove the lift transducer.

Note: Refer to the latest revision of Safe Flight document R-4069 if lift transducer gasket replacement is required.

(2) Installation

(a) Insert the lift transducer into the leading edge of the wing.

(b) Attach the lift transducer to the leading edge of the wing using four screws. Center the screws in the slots.

(c) Make sure the dimension between the face of the lift transducer plate and de-ice boot surface is as shown in table 31-20.1.

Note: It is acceptable to manually shape the lift transducer plate to meet the flushness requirements.

(d) Apply PR-1425 or equivalent sealant over the seam between the lift transducer and the de-ice boot as shown in figure 31-20.1, sheet 2. Apply and cure the sealant in accordance with the manufacturer's instructions.

(e) Connect the electrical harness.

(f) For SN: K056 and on and K003-K055 with SB-0035 aircraft, install the supplemental heater (refer to Chapter 30-30).

(g) Install access panel 5LW or 5RW (refer to Chapter 6), as applicable.

(h) Tune the Stall Prevention System (refer to Chapter 31-20.2.G).

B. Lift Computer

(1) Removal

(a) Set the BATT 1 and BATT 2 switches to off.

(b) Disconnect external electrical power from the airplane (refer to Chapter 24-40).

(c) Remove the passenger cabin carpet (refer to Chapter 25-10).

(d) Remove the right side passenger cabin floor panel (refer to Chapter 53-20).

(e) Disconnect the electrical harness from the lift computer.

(f) Remove the bolts and washers attaching the lift computer to the mounting tray.

(g) Remove the lift computer from the airplane.

(2) Installation

(a) Position the lift computer on the mounting tray.

(b) Attach the lift computer to the mounting tray using washers and bolts.

(c) Connect the electrical harness.

(d) Install the flooring and carpet. Refer to Chapter 25-10 and 53-20.

(e) Tune the Stall Prevention System (refer to Chapter 31-20.2.G).

(3) Lift Computer Ice Mode Check (SN: K056 and On, K011 - K055 with SB-0035, or K003 - K010 with SB-0017 and SB-0035)

(a) Connect external electrical power to the airplane (refer to Chapter 24-40).

(b) Set the BATT 1 and BATT 2 switches to ON.

(c) Make sure the aircraft is in the on-ground configuration.

(d) Make sure SPS CMP 1A, SPS CMP 1B, SPS CMP 2A, and SPS CMP 2B circuit breakers are in.

Note: The pusher and shaker will not be active during this test since the aircraft is on-ground.

(e) Move the left lift transducer fully up.

(f) Make sure both AoA indications increase.

(g) Release the left lift transducer.

(h) Set the DE-ICE BOOTS switch to ON.

Note: The DE-ICE FAIL CAS message will illuminate during this test. It can be ignored.

(i) Make sure both AoA indications increase.
(j) Set the DE-ICE BOOTS switch to off.
(k) Pull the SPS CMP 1A circuit breaker.
(l) Move the right lift transducer fully up.
(m) Make sure both AoA indications increase.
(n) Release the right lift transducer.
(o) Set the DE-ICE BOOTS switch to ON.
(p) Make sure both AoA indications increase.
(q) Set the DE-ICE BOOTS switch to off.
(r) Reset the SPS CMP 1A circuit breaker.
(s) If either lift computer does not provide the correct result, lift computer replacement may be required. Contact Epic Aircraft Customer Service for further troubleshooting.
(t) Set the BATT 1 and BATT 2 switches to off.
(u) Disconnect external electrical power from the airplane (refer to Chapter 24-40).

C. Angle of Attack Gauge

Note: Removal and installation of the copilot angle of attack gauge is similar.

(1) Removal
(a) Set the BATT 1 and BATT 2 switches to OFF.
(b) Disconnect external electrical power from the airplane (refer to Chapter 24-40).
(c) Remove the glare shield (refer to Chapter 25-10).
(d) Loosen the loop clamp attaching the angle of attack gauge to its mounting bracket.
(e) Slide the gauge forward then disconnect the wiring harness.
(f) Remove the gauge.
(2) Installation
(a) Connect the wiring harness to the angle of attack gauge.
(b) Insert the gauge into its mounting bracket.
(c) Tighten the loop clamp to attach the angle of attack gauge to the bracket.
(d) Install the glare shield (refer to Chapter 25-10).
(e) Tune the Stall Prevention System (refer to Chapter 31-20.2.G).

D. Shaker

(1) Removal

(a) Remove the pedestal main body finish panel (refer to Chapter 25-10).

(b) Remove the pedestal access panels 1LC and 1RC (refer to Chapter 6).

(c) Disconnect the wiring harness from the shaker.

(d) Remove the two bolts, four washers, and two locknuts attaching the shaker to the tangs on the yoke torque tube.

(e) Remove the shaker from the airplane.

(2) Installation

(a) Attach the shaker to the tangs on the yoke torque tube using two bolts, four washers, and two locknuts.

(b) Connect the wiring harness to the shaker.

(c) Install access panels 1LC and 1RC (refer to Chapter 6).

(d) Install the pedestal main body finish panel (refer to Chapter 25-10).

E. Pusher Servo

Refer to Chapter 22-10 or 22-11.

Figure 31-20.1: Stall Prevention System (Sheet 1 of 4)

LEGEND

1. Lift Transducer
2. Lift Computer
3. Mounting Tray
4. Countersunk Machine Screw
5. Bolt
6. Washer

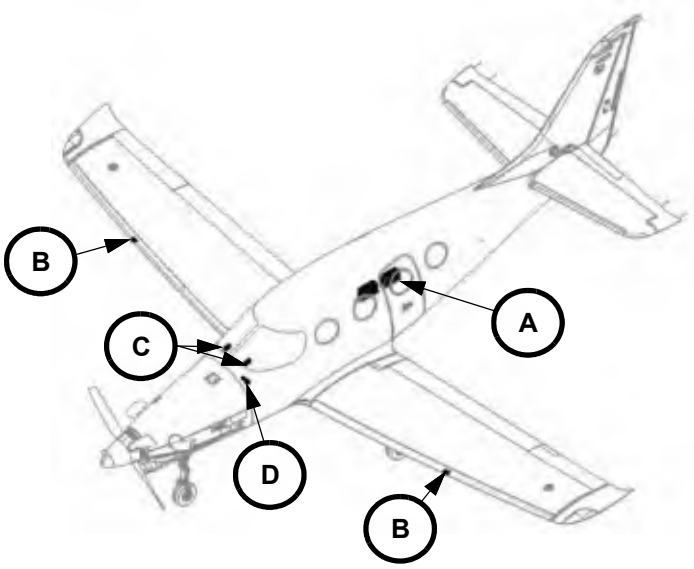

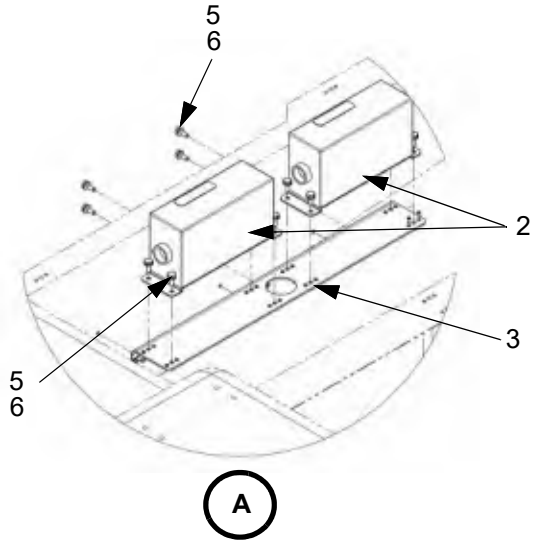

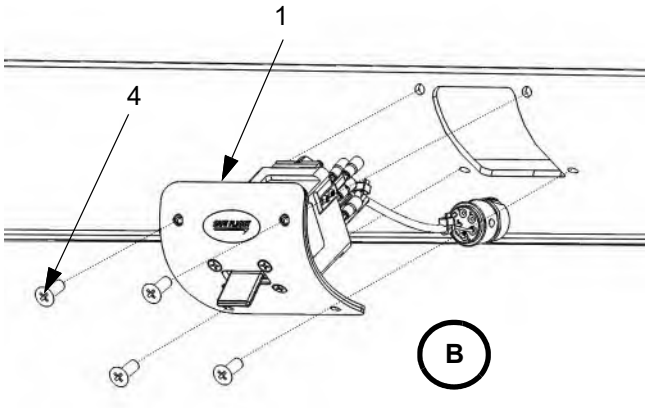

Figure 31-20.1: Stall Prevention System (Sheet 2 of 4)

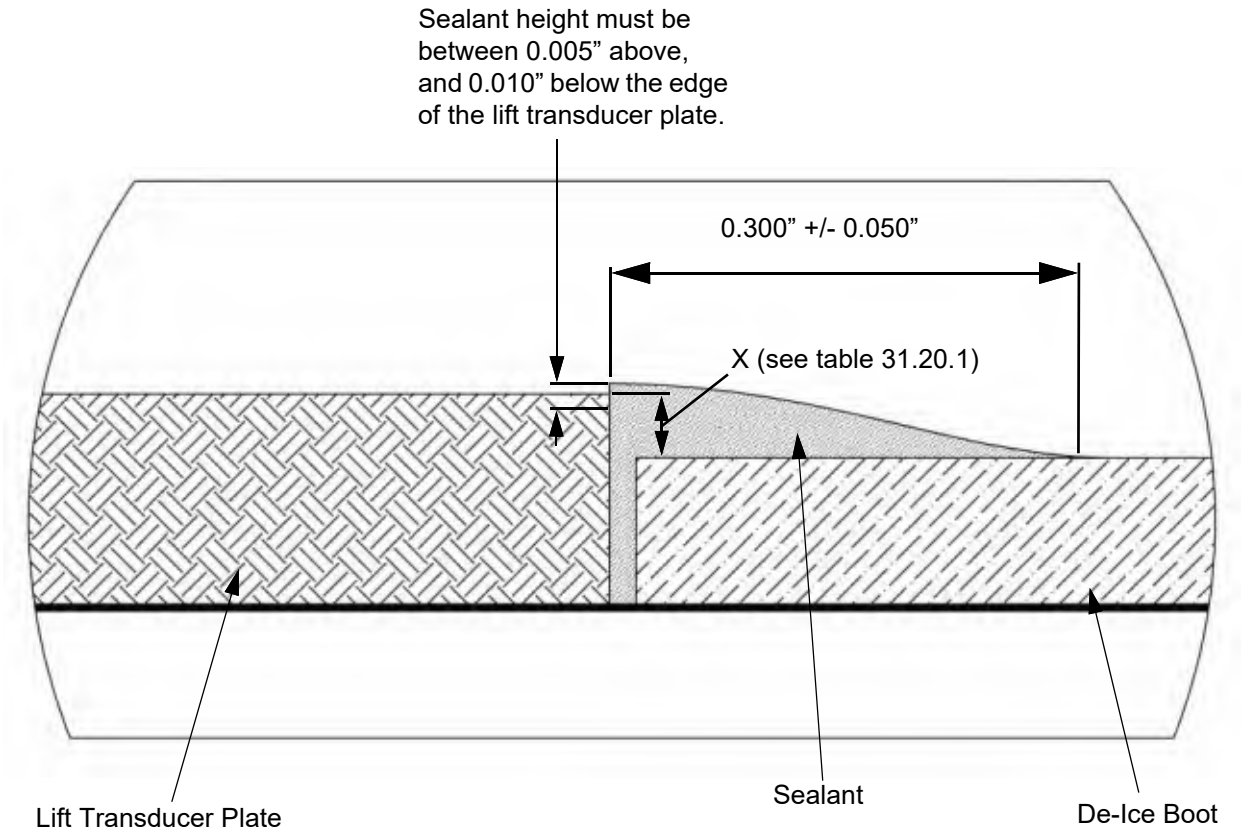

Table 31-20.1: Lift Transducer Plate to De-Ice Boot Surface Dimension Requirements

Dimension	X
Upper Edge (in)	0.000” - 0.030”
Bottom and Side Edges (in)	0.000” - 0.050”

Figure 31-20.1: Stall Prevention System (Sheet 3 of 4)

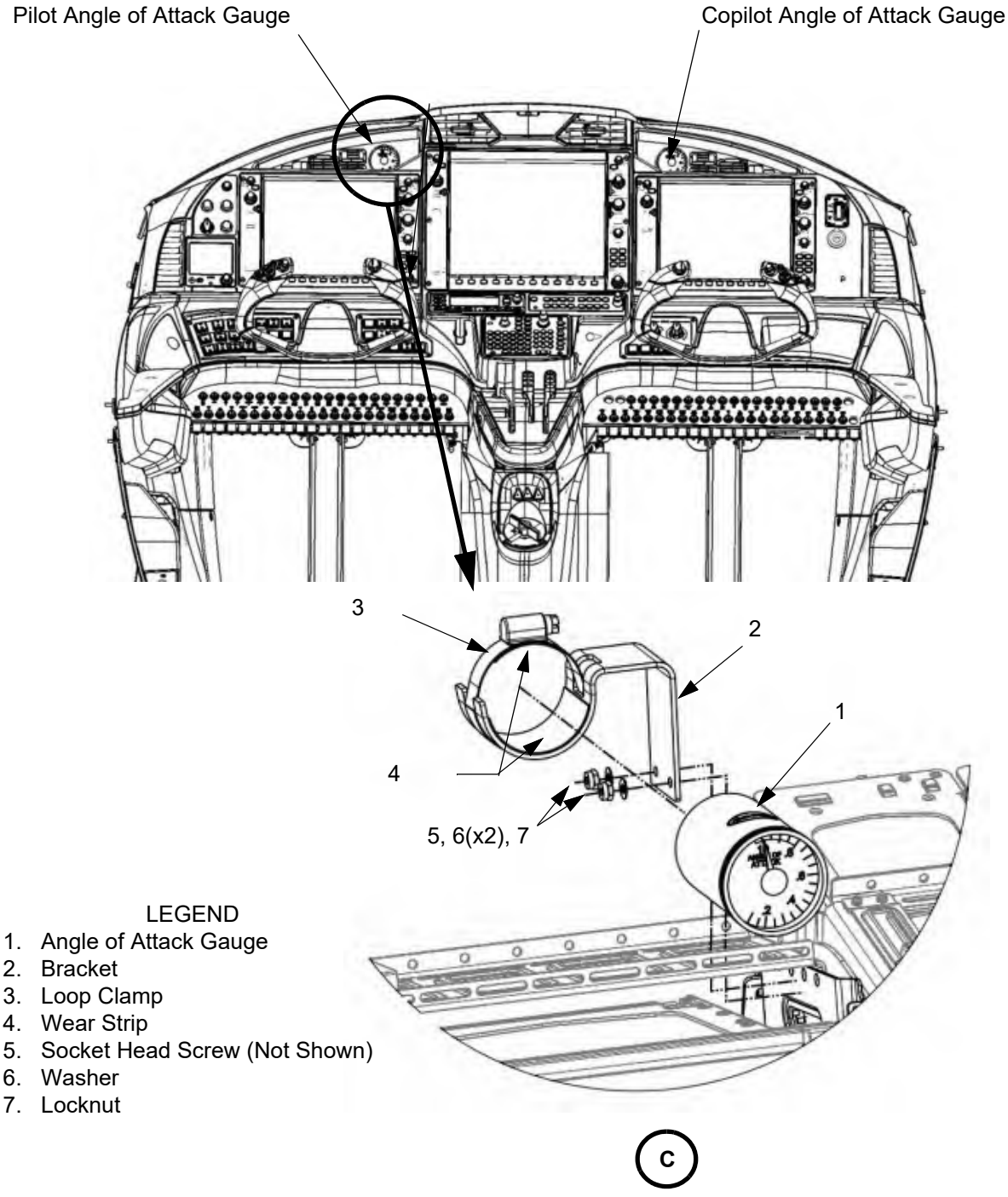

LEGEND

1. Angle of Attack Gauge
2. Bracket
3. Loop Clamp
4. Wear Strip
5. Socket Head Screw (Not Shown)
6. Washer
7. Locknut

Figure 31-20.1: Stall Prevention System (Sheet 4 of 4)

LEGEND
1. Shaker
2. Bolt
3. Washer
4. Locknut

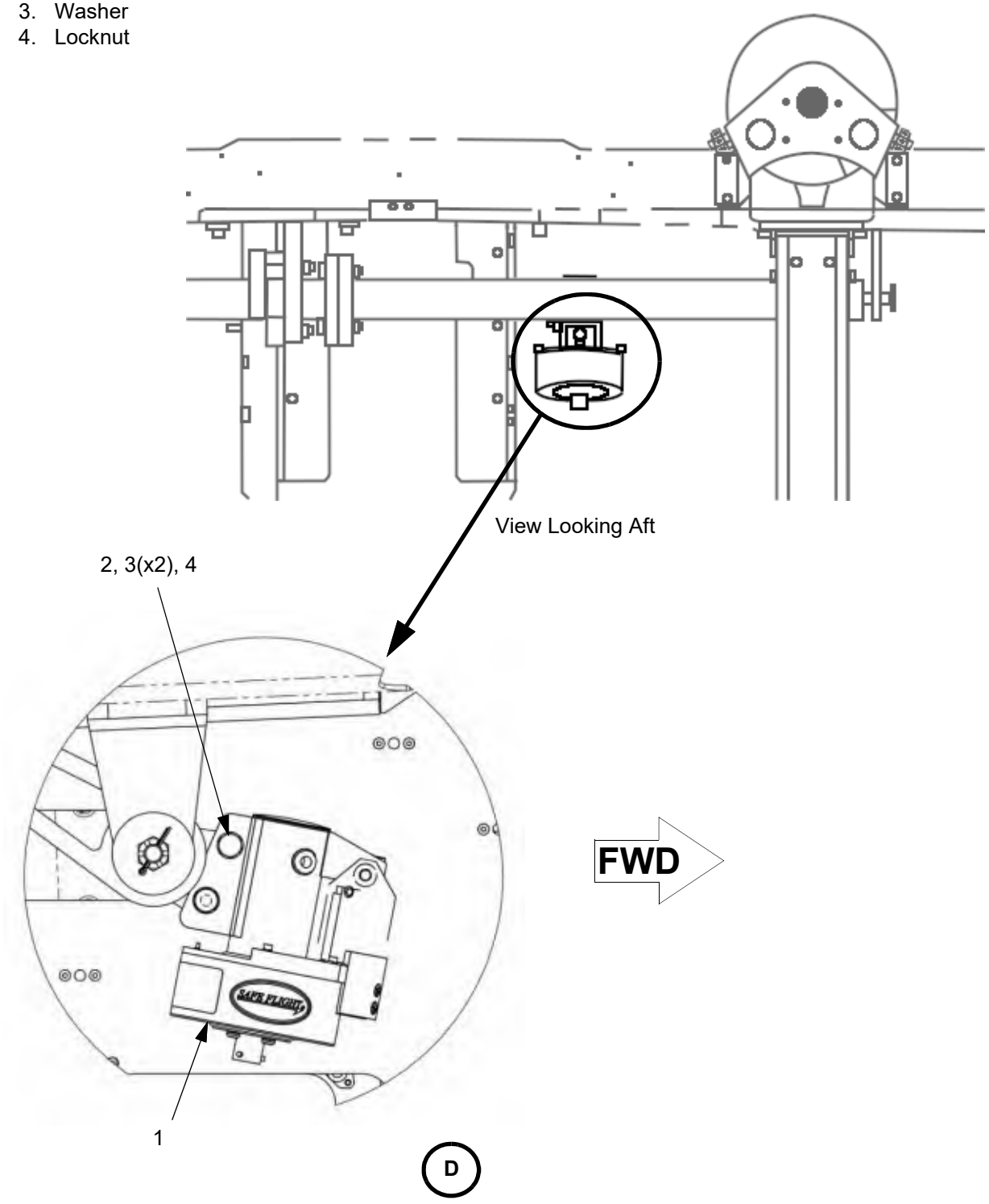

F. Stall Prevention System Operational Check

The majority of the components in this system are verified to be functional by using the STALL TEST switch on the test switch panel located to the left of the instrument panel. This test should normally occur during pre-flight checks. This switch is only active when the airplane is weight on wheels.

Note: Contact Epic Aircraft, LLC for instructions and information if the stall prevention system does not respond as indicated in the following procedure.

The following procedure validates portions of the system not exercised by the STALL TEST switch. Specific objectives of this test verify that:

- The system receives the correct weight off wheels signal.
- The lift transducer connections to the lift computers are functional.
- There are no failures that cause a persistent latent pusher command from one of the computers or associated relays (should require lifting both lift transducers to get pusher activation).

This procedure also verifies:

- There is no latent failure of the wiring between the left weight on wheels relay K121 and the LH lift compute.
- There is no latent failure of the wiring between the left weight on wheels relay K120 and the RH lift computer.
- There is no latent failure of the LH and RH lift computers.
- Relays K108, K145, and K146 have not failed in the closed position.

(1) Procedure:

(a) Set the BATT 1 and BATT 2 switches to ON.

(b) Push the STALL TEST switch to verify that both the pusher and shaker activate.

(c) Raise and level the airplane using aircraft jacks. Refer to Chapter 8-20.

(d) Manually raise the LH lift transducer. The shaker should activate but the pusher servo should not activate.

(e) Lower the LH lift transducer.

(f) Manually raise the RH lift transducer.The shaker should activate but the pusher servo should not activate.

(g) Lower the RH lift transducer.

(h) Manually raise both the LH and RH lift transducers simultaneously. Both the shaker and the pusher servo should activate.

(i) If the stall prevention system does not respond as indicated in the steps above contact Epic Aircraft, LLC for instructions.

G. Stall Prevention System Tuning

Two phases of stall prevention system tuning are required to complete tuning of the system. An initial coarse tuning followed by a final fine tuning which requires flight testing for verification.

WARNING: Flight testing must be done by an Epic Aircraft, LLC approved Pilot

Table 31-20.2: Special Tools

Item	Part Number	Supplier
Air Data Test Set	Barfield DPS1000 or similar	Barfield Inc.
Air Data Accessories Kit,	Model No. EPIC1000-945	Nav-Aids, LTD
SafeFlight Force Gauge Applicator (FGA)	2005-2 and 2005-3	SafeFlight Instrument Corporation
Lift Computer Breakout Box	SK100360	Epic Aircraft, LLC
Voltmeter		Any

(1) Initial Stall Prevention System Tuning

(a) Connect a breakout box to the lift computer to be adjusted. Monitor voltage from the lift transducer using positive lead on pinout 22 and negative lead on pin 23.

Note: A modified breakout box with LEDs may be used to monitor activation of certain modes instead of an additional multimeter.

(b) Connect the Force Gram Applicator (FGA) to the appropriate lift transducer. Figure 31-20.4 shows the relationship between FGA, volts and transducer displacement.

(c) Disconnect the shake motor to avoid unnecessary vibrations.

(d) Depress the weight on wheels switches to place the aircraft in Weight OFF Wheels mode.

(e) Perform the Tip Gram to Voltage Sweep, Refer to Table 31-20.2.

(f) Using the data from the Tip Gram to Voltage sweep, create a calibration curve (refer to Figure 31-20.2). Using the Tip Gram values in Table 31-20. 3, populate Table 31-20.4 based on this calibration curve.

(g) Tune the lift computers to the voltage values populated in Table 31-20.4 by performing the following.

(i) Begin with the shake setting for the Flaps UP (F0) condition.

(ii) With the Force Gauge Applicator (FGA) attached to the appropriate transducer and the transducer voltage being monitored, dial the FGA until the calculated voltage from Table 31-20.4 is achieved.

(iii) While monitoring the shake voltage on pin 12, adjust the appropriate potentiometer on the lift computer until the shake becomes active (28 volts). Refer to Figure 31-20.3 for the potentiometer locations. A clockwise turn will apply negative volts, and a counterclockwise turn will apply positive volts. One turn is approximately 0.25 volts in change.

(iv) Reset the FGA until the shake is deactivated (0 volts). Re-verify that the shake becomes active at the proper voltage.

(v) Repeat steps (i) to (iv) for flaps T/O (F1) and flaps FULL (F2).

Note: While tuning the Flaps Full (F2) condition, the airspeed must be run up to >70kts, using an air data test set.

(vi) Move on to push setting for the flaps UP (F0) condition.

(vii) With the FGA attached to the appropriate transducer and the transducer voltage being monitored, dial the FGA until the calculated voltage from Table 31-20.4 is achieved.

(viii) While monitoring the push voltage on pin 15, adjust the appropriate potentiometer on the lift computer until the push becomes active (28 volts). Refer to Figure 31-20.3 for the potentiometer location. A clockwise turn will apply negative volts, and a counterclockwise turn will apply positive volts.

(ix) Reset the FGA until the shake is deactivated (0 volts). Re-verify the push becomes active at the proper voltage.

(x) Repeat steps (vii) to (ix) for the flaps T/O (F1) and flaps FULL (F2).

Note: While tuning for the Flaps Full (F2) condition, the airspeed must be run up to >70kts.

(xi) Repeat (i) to (v) and (vi) to (x) for the second lift computer.

(h) Reconnect the shake motor.

Figure 31-20.2: Tip Gram to Voltage Calibration Curve

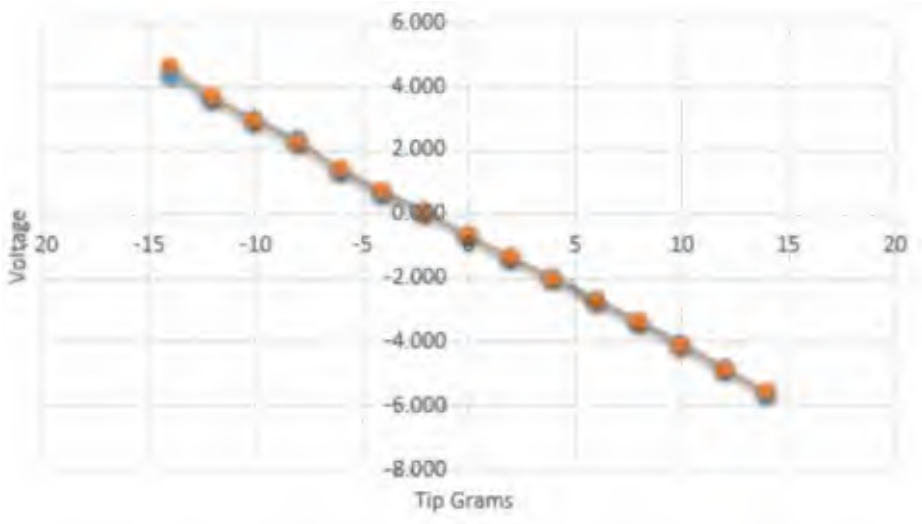

Figure 31-20.3: Lift Computer Potentiometers

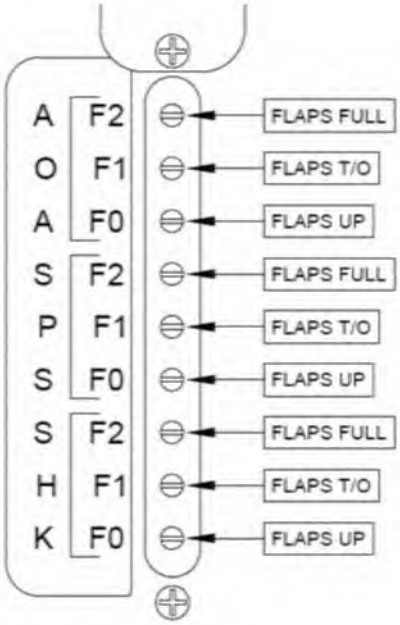

Figure 31-20.4: Airfoil Tipgram Relationship

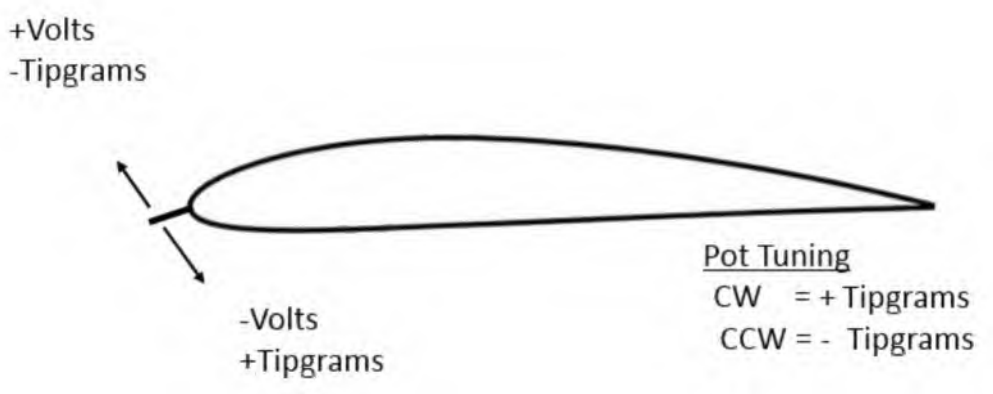

(2) Angle of Attack (AoA) Tuning

The Angle of Attack (AoA) indicators have a Voltage to AoA Indication Base Map which is preloaded. This Map is defined Table 31-20.6. The AoA's input voltage is generated from the stall computer and can be adjusted for each flap condition through the AoA potentiometers located on the stall computer (refer to Figure 31-20. 3. The tolerance on this system is AoA indication of 0.05. To tune this system, start with the Stall Computer Adjustment (refer to (b) below). If the tolerance cannot be met, a re-tune of the AoA's Voltage to AoA indication must be completed (refer to (b) below). To avoid tuning the AoA's multiple times, it is best to tune after the Push and Shake triggers have been fully defined.

(a) Stall Computer Adjustment

(i) Begin with the flaps UP (F0) condition.

(ii) With the FGA attached to the appropriate transducer and the transducer voltage being monitored, dial the FGA until the existing voltage is achieved for each Transducer Position listed in Table 31-20.7.

(iii) Adjust the appropriate potentiometer on the lift computer until the AoA indication needle matches the AoA Position and AoA Output Voltage listed in Table 31-20.7.

Note: If tolerance cannot be achieved, move onto (b) below.

(iv) Repeat steps (ii) to (iii) for flaps T/O (F1) and flaps FULL (F2).

(v) Repeat steps (i) to (iv) for the second Stall Computer.

(b) Angle of Attack (AoA) Voltage to AoA Indication New Tune

(i) Install the Stall Computer Breakout Box to Stall Computer 1 (Left)

(ii) Begin with the flaps UP (F0) position. Set the transducer to the Shake position. Find the center of the Stall Computer AoA Potentiometer by monitoring the voltage (mV) across pin 19 (Hi) and 18 (Lo) for each Position outlined in Table 31-20.5.

(iii) Using the data from step (ii), set each AoA Potentiometer to its center point.

(iv) Install the Stall Computer Breakout Box to Stall Computer 2 (Right), repeat step (ii) and (iii).

(v) Using the Windows application PuTTy (or similar serial port terminal program) connect a PC to the AoA Config Port

(vi) With the FGA attached to the appropriate transducer and the transducer voltage being monitored, dial the FGA until the voltage is achieved for each condition listed in Table 31-20.6, document the AoA output voltage for each condition.

Note: AoA output voltage can be found by measuring the voltage across pins 18 (Lo) and 19 (Hi) of the Stall Computer Breakout Box. The voltage can also be found by using the PuTTy application.

(vii) Adjust the Stall Computer 2 (Right) AoA potentiometers until the AoA output voltage matches the Stall Computer 1 (Left) AoA output Voltage for each Transducer Position.

Note: Use the AoA Potentiometer Centering Table to identify which voltage adjustments need made.

(viii) Using the PuTTy (or similar) application, follow the prompts and update the Voltage Map table for both Pilot and Copilot AoA Indicators to match the values documented in Table 31-20.6.

(3) SPS Fine Tuning

Further SPS tuning could be required after the initial tuning is complete. This will be completed through flight testing.

WARNING: Flight testing must be done by an Epic Aircraft, LLC approved Pilot

(a) Conditions Required for Further Tuning

If the following conditions are not met, additional tuning of the lift computers is required.

(i) At a heavy forward configuration with flaps full, push must occur at 68 KCAS +0 KCAS/-1 KCAS while maintaining a 2 KCAS margin to natural stall.

(ii) At a light forward configuration for flaps UP and T/O there must be 0.5 KCAS margin between natural stall and pusher activation.

(iii) Shaker activation must occur 0.5 KCAS from pusher activation at all configurations.

(iv) Verification of all flight envelope corners should occur after tuning for heavy forward and light forward configurations are completed.

(v) AoA should read ~.96 or straight vertical on the dial at pusher activation.

Note: Test crew must note the airspeed at which the stall warning (shake) and stall prevention (push) take place during flight testing.

(b) Additional Tuning Process

When additional tuning is deemed necessary the following steps are required:

(i) Connect a breakout box to the lift computer to be adjusted. Monitor voltage from the lift transducer using positive lead on pinout 22 and negative lead on pin 23.

(ii) Connect the Force Gram Applicator (FGA) to the appropriate lift transducer.

(iii) Disconnect the shake motor to avoid unnecessary vibrations.

(iv) Depress the weight on wheels switch to place the aircraft in Weight OFF Wheels mode.

(v) For the flap condition requiring adjustment (if tuning flaps FULL an air data test set is required):

1. Adjust the appropriate potentiometer an amount deemed reasonable (an approximate amount is -0.15 volts per +1 knot). A clockwise turn will apply negative volts, and a counterclockwise turn will apply positive volts.
2. Re-verify that the push or shake becomes active at the new voltage setting using the FGA to approach the push or shake.
3. Repeat the previous two steps as needed for the other flap settings.
4. Record the new values for Table 31-20.3.

(vi) Flight test the new lift computer settings. If necessary repeat steps (i) to (v) above as required.

(vii) Reconnect the shake motor.

(viii) Refer to 31-20.2.G.(2)(b) if further AoA tuning is required.

(4) Lift Computer Calibration

Table 31-20.3: Tip Gram to Voltage Sweep

Tip Gram to Voltage Sweep		
Tip Grams	Left (Pilot) Volts DC	Right (Copilot) Volts DC
8		
6		
4		
2		
0		
-2		
-4		
-6		
-8		

Table 31-20.4: Tip Grams

Tip Grams				
	TG Left		TG Right	
Flaps	TG_{PSH}	TG_{SH}	TG_{PSH}	TG_{SH}
UP	-3.1	-0.3	-2.6	0.0
T/O	-3.4	-0.4	-3.0	-0.1
FULL	-7.4	-0.3	-7.0	0.0

Table 31-20.5: Calibrated Volts DC

Calibrated Volts DC				
	VDC Left		VDC Right	
Flaps	$VOLT_{PSH}$	$VOLT_{SH}$	$VOLT_{PSH}$	$VOLT_{SH}$
UP	-3.1	-0.3	-2.6	0.0
T/O	-3.4	-0.4	-3.0	-0.1
FULL	-7.4	-0.3	-7.0	0.0

Table 31-20.6: Angle Of Attack Stall Computer Potentiometer Centering

AoA Potentiometer Centering				
Stall Computer 1 (Left)			Stall Computer 1 (Right)	
Flaps UP			Flaps UP	
Position	mV		Position	mV
cw			cw	
ccw			ccw	
Difference			Difference	
Mid-Point			Mid-Point	
Flaps T/O			Flaps T/O	
Position	mV		Position	mV
cw			cw	
ccw			ccw	
Difference			Difference	
Mid-Point			Mid-Point	
Flaps FULL			Flaps FULL	
Position	mV		Position	mV
cw			cw	
ccw			ccw	
Difference			Difference	
Mid-Point			Mid-Point	

Table 31-20.7: Angle of Attack New Voltage Table

Transducer Position	AoA Position	Computer 1 AoA Output mV	Computer 2AoA Output mV
Full Up (Slow Stop)	1		
Push	0.9		
Shake	0.75		
95 kts	0.5		
Full Down (Fast Stop)	0		

Table 31-20.8: Angle of Attack Voltage to AoA Indication Base Map

Transducer Position	AoA Position	AoA Output mV
Full Up (Slow Stop)	1	-1.33
Push	0.75	7.33
Shake	0.6	16.5
95 kts	0.5	93.61
Full Down (Fast Stop)	0	229.48

H. Force Gram Applicator Instructions:

Safe Flight has created an instrument to assist in determining the required settings of the lift computer pots. A force gram applicator (FGA) is attached to a fixture which is in turn affixed to the lift transducer (Figure 4). There are two FGAs used during tuning of the lift computer. A fine and a course FGA. The fine measures from 1 to 6 tipgrams, a unit created by Safe Flight that measures force applied to the tip of the vane. The course device measures from 6 to 14 TG. Instructions of how the device is used are as follows:

To attach the FGA, place the FGA in the fixture and snap the locating pin on the back of the gage in place (see Figure 4). Attach the applicator to the transducer by placing the anchor tab (3) on the front of the fixture in the left inside of the vane opening. Place the screw points (4) in the recesses of the screw heads (5) and tighten down the knob (1) until the fixture fits snuggly on the transducer. Knob (2) is used to position the gage in and out. Knob (6) is used to apply force to the vane, negative tip grams (TG) up or forward, and positive TG down or aft.

To apply negative TG, position the gage needle (7) under the vane tip (8). Turn the knob (6) to apply an upward or forward force on the vane.

To apply positive TG, position the gage needle (7) on top of the vane tip (8). Turn the knob (6) to apply a downward or aft force on the vane.

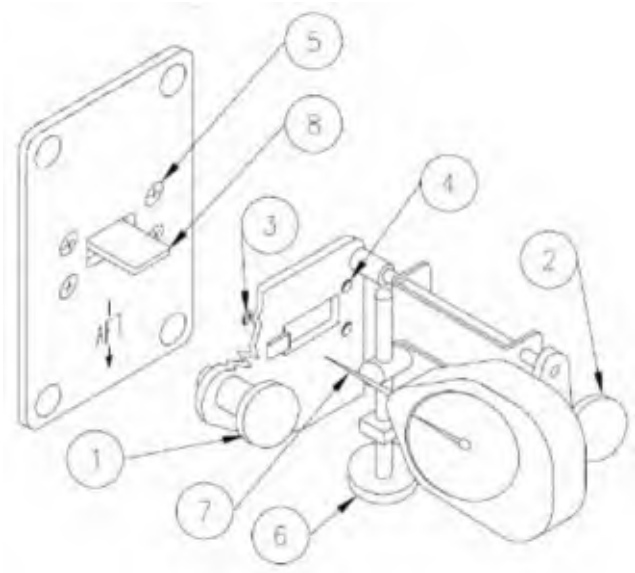

I. Annunciation Panel Verification

(1) Push the 5V CONVERT circuit breaker IN.

(2) Using the appropriate cockpit inputs verify the correct colors are displayed on the annunciation panel. For example, push the GO-AROUND switch on the power lever then verify that FLAPS is illuminated RED when the flaps position is either UP or FULL and verify that the FLAPS is illuminated GREEN when the flaps position is in T/O position.

Table 31-20.9: Annunciation Panel Lights

Legend	Color	Display
FLAPS TITLE	White	Active when FLAPS T/O or FLAPS FULL is active.
TRANSITION	Amber	Active when FLAPS UP is inactive or FLAPS T/O is inactive or FLAPS FULL is inactive.
T/O	White	Active when FLAPS T/O is active.
FULL	White	Active when FLAPS FULL is active.
TAKEOFF TITLE	White	Active when WEIGHT ON WHEELS SWITCH is active and the GO-AROUND SWITCH is active.
Flaps	Red	Active when WEIGHT ON WHEELS SWITCH is active, GO AROUND SWITCH is active, and FLAPS T/O is inactive.
Flaps	Green	Active when WEIGHT ON WHEELS SWITCH is active, GO-AROUND SWITCH is active, and FLAPS T/O is active.
Trim Ail	Red	Active when WEIGHT ON WHEELS SWITCH is active, GO-AROUND SWITCH is active and AILERON TRIM is >10% Right of Center or AILERON TRIM is >10% Left of Center.
Trim Ail	Green	Active when WEIGHT ON WHEELS SWITCH is active, GO-AROUND SWITCH is active, and AILERON TRIM is <10% Right of Center and AILERON TRIM is <10% Left of Center.
Trim Rud	Red	Active when WEIGHT ON WHEELS SWITCH is active, GO-AROUND SWITCH is active, and RUDDER TRIM is <50% Right of Center is active.
Trim Rud	Green	Active when WEIGHT ON WHEELS SWITCH is active, GO-AROUND SWITCH is active, and RUDDER TRIM is >50% Right of Center.
Trim Elev	Red	Active when WEIGHT ON WHEELS SWITCH is active, GO-AROUND SWITCH is active, and ELEVATOR TRIM is >10% High of Center or >10% Low of Center.

Legend	Color	Display
Trim Elev	Green	Active when WEIGHT ON WHEELS SWITCH is active, GO-AROUND SWITCH is active, and ELEVATOR TRIM is <10% High of Center or <10% Low of Center.
Door	Red	Active when WEIGHT ON WHEELS SWITCH is active, GO-AROUND switch is active, DOOR SEAL SWITCH OFF is active, or DOOR UNLOCKED is active.
Door	Green	Active when WEIGHT ON WHEELS SWITCH is active, GO-AROUND SWITCH is active, DOOR SEAL SWITCH OFF is inactive, and DOOR UNLOCKED is inactive.
Press Air	Red	Active when WEIGHT ON WHEELS SWITCH is active, GO-AROUND SWITCH is active, and PRESSURIZATION AIR OFF is active.
Press Air	Green	Active when WEIGHT ON WHEELS SWITCH is active, GO-AROUND SWITCH is active, and PRESSURIZATION AIR OFF is inactive.
Oxygen	Red	Active when WEIGHT ON WHEELS SWITCH is active, GO-AROUND SWITCH is active, and OXYGEN PRESSURE LOW is active.
Oxygen	Green	Active when WEIGHT ON WHEELS SWITCH is active, GO-AROUND SWITCH is active, and OXYGEN PRESSURE LOW is inactive.
Nitrogen	Red	Active when WEIGHT ON WHEELS SWITCH is active, GO-AROUND SWITCH is active, and NITROGEN PRESSURE LOW is active.
Nitrogen	Green	Active when WEIGHT ON WHEELS SWITCH is active, GO-AROUND SWITCH is active, and NITROGEN PRESSURE LOW is inactive.
Gear Hndl	Red	Active when WEIGHT ON WHEELS SWITCH is active, GO-AROUND SWITCH is active, and LANDING GEAR SWITCH UP is active.
Gear Hndl	Green	Active when WEIGHT ON WHEELS SWITCH is active, GO-AROUND SWITCH is active, and LANDING GEAR SWITCH DOWN is active.
PFD Alert	Red	Active when WEIGHT ON WHEELS SWITCH is active, GO-AROUND SWITCH is active, and MASTER CAUTION is active, or MASTER WARNING is active.

Legend	Color	Display
PFD Alert	Green	Active when WEIGHT ON WHEELS SWITCH is active, GO-AROUND SWITCH is active, MASTER CAUTION is inactive, and MASTER WARNING is inactive.
GEAR TITLE	White	Active when LANDING GEAR SWITCH DOWN is active or LANDING GEAR SWITCH UP is active.
NOSE	Red	Active when LANDING GEAR SWITCH DOWN is active, NOSE GEAR DOWN AND LOCKED is inactive, or LANDING GEAR SWITCH UP is active and NOSE GEAR UP AND LOCKED is inactive.
NOSE	Green	Active when LANDING GEAR SWITCH DOWN is active and NOSE GEAR DOWN AND LOCKED is active.
LEFT	Red	Active when LANDING GEAR SWITCH DOWN is active, LEFT MLG DOWN AND LOCKED is inactive, or LANDING GEAR SWITCH UP is active and LEFT MLG UP AND LOCKED is inactive.
LEFT	Green	Active when LANDING GEAR SWITCH DOWN is active and LEFT MLG DOWN AND LOCKED is active.
RIGHT	Red	Active when LANDING GEAR SWITCH DOWN is active and RIGHT MLG DOWN AND LOCKED is inactive or LANDING GEAR SWITCH UP is active and RIGHT MLG UP AND LOCKED is inactive.
RIGHT	Green	Active when LANDING GEAR SWITCH DOWN is active and RIGHT MLG DOWN AND LOCKED is active.
CREW CALL	Blue	Active when CREW CALL is active.
MST CAUTION	Amber	Active when MASTER CAUTION is active.
MST WARNING	Red	Active when MASTER WARNING is active.

CHAPTER
32

Landing Gear

This Page Intentionally Left Blank

List of Effective Pages

Chapter/Section	Page Number	Effective Date
32-Title	Page 1	02 Jan 2020
32-Title	Page 2	02 Jan 2020
32-LOEP	Page 1	08 Sep 2026
32-LOEP	Page 2	08 Sep 2026
32-LOEP	Page 3	08 Sep 2026
32-LOEP	Page 4	13 Apr 2020
32-TOC	Page 1	16 May 2022
32-TOC	Page 2	02 Jan 2020
32-00	Page 1	10 Jul 2025
32-00	Page 2	10 Jul 2025
32-00	Page 3	10 Jul 2025
32-00	Page 4	10 Jul 2025
32-00	Page 5	10 Jul 2025
32-10	Page 1	08 Sep 2026
32-10	Page 2	08 Sep 2026
32-10	Page 3	08 Sep 2026
32-10	Page 4	08 Sep 2026
32-10	Page 5	08 Sep 2026
32-10	Page 6	08 Sep 2026
32-10	Page 7	08 Sep 2026
32-10	Page 8	08 Sep 2026
32-10	Page 9	08 Sep 2026
32-10	Page 10	08 Sep 2026
32-10	Page 11	08 Sep 2026
32-10	Page 12	08 Sep 2026
32-10	Page 13	08 Sep 2026
32-10	Page 14	08 Sep 2026
32-10	Page 15	08 Sep 2026
32-10	Page 16	08 Sep 2026
32-10	Page 17	08 Sep 2026
32-10	Page 18	08 Sep 2026
32-20	Page 1	08 Sep 2026
32-20	Page 2	02 Jan 2020
32-20	Page 3	02 Jan 2020
32-20	Page 4	11 Nov 2020
32-20	Page 5	16 May 2022
32-20	Page 6	02 Jan 2020
32-20	Page 7	11 Nov 2020
32-20	Page 8	08 Sep 2026

32-20 ..... Page 9 ..... 08 Sep 2026
32-20 ..... Page 10 ..... 08 Sep 2026
32-20 ..... Page 11 ..... 08 Sep 2026
32-20 ..... Page 12 ..... 08 Sep 2026
32-20 ..... Page 13 ..... 08 Sep 2026
32-20 ..... Page 14 ..... 08 Sep 2026
32-20 ..... Page 15 ..... 08 Sep 2026
32-20 ..... Page 16 ..... 08 Sep 2026
32-20 ..... Page 17 ..... 08 Sep 2026
32-20 ..... Page 18 ..... 08 Sep 2026

32-30 ..... Page 1 ..... 08 Sep 2026
32-30 ..... Page 2 ..... 08 Sep 2026
32-30 ..... Page 3 ..... 08 Sep 2026
32-30 ..... Page 4 ..... 08 Sep 2026
32-30 ..... Page 5 ..... 08 Sep 2026
32-30 ..... Page 6 ..... 08 Sep 2026
32-30 ..... Page 7 ..... 08 Sep 2026
32-30 ..... Page 8 ..... 08 Sep 2026
32-30 ..... Page 9 ..... 08 Sep 2026
32-30 ..... Page 10 ..... 08 Sep 2026
32-30 ..... Page 11 ..... 08 Sep 2026
32-30 ..... Page 12 ..... 08 Sep 2026
32-30 ..... Page 13 ..... 08 Sep 2026
32-30 ..... Page 14 ..... 08 Sep 2026
32-30 ..... Page 15 ..... 08 Sep 2026
32-30 ..... Page 16 ..... 08 Sep 2026
32-30 ..... Page 17 ..... 08 Sep 2026
32-30 ..... Page 18 ..... 08 Sep 2026
32-30 ..... Page 19 ..... 08 Sep 2026
32-30 ..... Page 20 ..... 08 Sep 2026
32-30 ..... Page 21 ..... 08 Sep 2026
32-30 ..... Page 22 ..... 08 Sep 2026
32-30 ..... Page 23 ..... 08 Sep 2026
32-30 ..... Page 24 ..... 08 Sep 2026
32-30 ..... Page 25 ..... 08 Sep 2026
32-30 ..... Page 26 ..... 08 Sep 2026

32-40 ..... Page 1 ..... 10 Jul 2025
32-40 ..... Page 2 ..... 10 Jul 2025
32-40 ..... Page 3 ..... 19 Jan 2023
32-40 ..... Page 4 ..... 14 Jul 2021
32-40 ..... Page 5 ..... 10 Jul 2025
32-40 ..... Page 6 ..... 14 Jul 2021
32-40 ..... Page 7 ..... 14 Jul 2021
32-40 ..... Page 8 ..... 08 Apr 2024
32-40 ..... Page 9 ..... 08 Apr 2024

32-40 ..... Page 10 ..... 10 Jul 2025
32-40 ..... Page 11 ..... 10 Jul 2025
32-40 ..... Page 12 ..... 10 Jul 2025
32-40 ..... Page 13 ..... 08 Sep 2026
32-40 ..... Page 14 ..... 08 Sep 2026
32-40 ..... Page 15 ..... 08 Sep 2026
32-40 ..... Page 16 ..... 08 Sep 2026
32-40 ..... Page 17 ..... 08 Sep 2026
32-40 ..... Page 18 ..... 08 Sep 2026
32-40 ..... Page 19 ..... 08 Sep 2026
32-40 ..... Page 20 ..... 08 Sep 2026
32-40 ..... Page 21 ..... 08 Sep 2026
32-40 ..... Page 22 ..... 08 Sep 2026
32-40 ..... Page 23 ..... 08 Sep 2026
32-40 ..... Page 24 ..... 08 Sep 2026
32-40 ..... Page 25 ..... 08 Sep 2026
32-40 ..... Page 26 ..... 08 Sep 2026

32-50 ..... Page 1 ..... 10 Jul 2025
32-50 ..... Page 2 ..... 12 Nov 2025
32-50 ..... Page 3 ..... 10 Jul 2025
32-50 ..... Page 4 ..... 10 Jul 2025
32-50 ..... Page 5 ..... 10 Jul 2025
32-50 ..... Page 6 ..... 10 Jul 2025
32-50 ..... Page 7 ..... 10 Jul 2025
32-50 ..... Page 8 ..... 10 Jul 2025
32-50 ..... Page 9 ..... 10 Jul 2025
32-50 ..... Page 10 ..... 10 Jul 2025
32-50 ..... Page 11 ..... 10 Jul 2025
32-50 ..... Page 12 ..... 10 Jul 2025
32-50 ..... Page 13 ..... 10 Jul 2025
32-50 ..... Page 14 ..... 10 Jul 2025
32-50 ..... Page 15 ..... 10 Jul 2025
32-50 ..... Page 16 ..... 10 Jul 2025
32-50 ..... Page 17 ..... 10 Jul 2025
32-50 ..... Page 18 ..... 10 Jul 2025

32-60 ..... Page 1 ..... 10 Jul 2025
32-60 ..... Page 2 ..... 10 Jul 2025
32-60 ..... Page 3 ..... 02 Jan 2020
32-60 ..... Page 4 ..... 02 Jan 2020
32-60 ..... Page 5 ..... 08 Sep 2026
32-60 ..... Page 6 ..... 08 Sep 2026
32-60 ..... Page 7 ..... 08 Sep 2026
32-60 ..... Page 8 ..... 08 Sep 2026

This Page Intentionally Left Blank

Table of Contents

List of Effective Pages ..... 32-LOEP / Page 1
Table of Contents ..... 32-TOC / Page1

Paragraph **Page Number**

Landing Gear

1. General ..... 32-00 / Page 1
2. Troubleshooting ..... 32-00 / Page 4

Main Gear and Doors

1. Description ..... 32-10 / Page 1
2. Maintenance Practices ..... 32-10 / Page 1
   - A. Main Gear ..... 32-10 / Page 1
   - B. Damper ..... 32-10 / Page 7
   - C. Trailing Link ..... 32-10 / Page 12
   - D. Doors ..... 32-10 / Page 14

Nose Gear and Doors

1. Description ..... 32-20 / Page 1
2. Maintenance Practices ..... 32-20 / Page 1
   - A. Nose Gear ..... 32-20 / Page 1
   - B. Nose Gear Strut ..... 32-20 / Page 6
   - C. Nose Wheel Centering Device ..... 32-20 / Page 8
   - D. Steering Damper ..... 32-20 / Page 11
   - E. Nose Gear Doors ..... 32-20 / Page 13
   - F. Blast Shield ..... 32-20 / Page 15
   - G. Uplock Assembly ..... 32-20 / Page 17
   - H. Tow Bar Pin ..... 32-20 / Page 18

Extension and Retraction

1. Description ..... 32-30 / Page 1
2. Maintenance Practices ..... 32-30 / Page 1
   - A. Nose and Main Gear Actuators ..... 32-30 / Page 1
   - B. Main Gear Uplock Actuator ..... 32-30 / Page 8
   - C. Nose Gear Uplock Actuator ..... 32-30 / Page 12
   - D. Main Gear Upstop ..... 32-30 / Page 18
   - E. Landing Gear Control Switch ..... 32-30 / Page 21
   - F. Landing Gear Operational Check ..... 32-30 / Page 23
   - G. Uplock Hook Check ..... 32-30 / Page 25

Wheels and Brakes

1. Description ..... 32-40 / Page 1
2. Maintenance Practices ..... 32-40 / Page 1
A. Main Wheel ..... 32-40 / Page 1
B. Nose Wheel ..... 32-40 / Page 4
C. Brakes ..... 32-40 / Page 5
D. Brake Master Cylinder ..... 32-40 / Page 8
E. Bleeding the Brake System K003-K085 (except K014) ..... 32-40 / Page 10
F. Bleeding the Brake System K014, K086 and On ..... 32-40 / Page 10
G. Brake Lines and Hoses ..... 32-40 / Page 11
H. Brake Reservoir ..... 32-40 / Page 12
Figure 32-40.5: Brake System (K003- K085, Except K014) (Sheet 1 of 7) ..... 32-40 / Page 13
J. Wheel Speed Sensors (K014, K086 and On) ..... 32-40 / Page 25

Steering

1. Description ..... 32-50 / Page 1
2. Maintenance Practices ..... 32-50 / Page 1
A. Steering Kickout Assembly ..... 32-50 / Page 1
B. Kickout Arms ..... 32-50 / Page 3
C. Steering Arm Assembly ..... 32-50 / Page 4
D. Contact Plates ..... 32-50 / Page 6
E. Steering Push-Rod Assembly ..... 32-50 / Page 7
F. Steering Vibration Isolator ..... 32-50 / Page 8
G. Adjustment ..... 32-50 / Page 15
H. Inspection ..... 32-50 / Page 17

Positioning, Warning, and Ground Safety Switch

1. Description ..... 32-60 / Page 1
2. Maintenance Practices ..... 32-60 / Page 1
A. Up Switch ..... 32-60 / Page 1
B. Weight on Wheels Switch ..... 32-60 / Page 5

LANDING GEAR

1. General

This airplane has retractable main and nose gear in a tricycle configuration. Taxiing, takeoff, and landing forces are absorbed using hydro-pneumatic dampers on each main gear and a hydro-pneumatic strut on the nose gear. Each landing gear has tubeless tires on aluminum wheels. Braking is done using hydraulic disc brakes on each main gear. The brakes are operated by master cylinders attached to the left and right rudder pedals on both the pilot and the copilot sides. Steering of the airplane is done by directional braking and by turning the nose gear. Aircraft SN: K014 and K086 and on are equipped with an Automated Brake System that provides a parking brake function and braking for the Emergency Autoland (EAL) System. The parking brake function is controlled by the BRK HLD switch on the left switch panel.

The landing gear system is made of three gear legs and a hydraulic system that actuates the retraction mechanisms. The major electrical portions of the system are two weight on wheels switches, up and locked indication switches, down and locked indication switches, switches and circuit breakers related to the hydraulic system. Two solenoids control the extend and retract functions of the hydraulic system. A solenoid regulated by a pressure switch controls the pressurization / recirculation of the hydraulic system. The landing gear system also has an emergency nitrogen blowdown system with a transducer that outputs nitrogen pressure. Refer to Chapter 32 for the complete Landing Gear Operation Test Sequence

Refer to the current revision of the E1000 Wiring Manual, P/N SK05000002 for SN K003-K085 (except K014).
Refer to the current revision of the E1000 Wiring Manual, P/N SK05003002 for SN K014, K086 and on.

WARNING: When electrical power is removed from the landing gear circuit both the extend and retract sides of the hydraulic system are vented back to tank. This will happen when airplane power is turned off or the GEAR CTRL circuit breaker is pulled. This may cause the landing gear to move if they are not in a locked position. Ensure personnel and equipment are clear before removing power.

Table 32-00.1: Special Tools

Item	Part Number	Supplier	Qty
Aircraft Jacks, 10,000lb capacity.	-	Any	3
Lifting Pins	FK07100001	Epic Aircraft	3
Hydraulic Service Cart, (MIL-PRF-83282 or MIL-PRF-87257) 2500 psi, maximum 3.5 gpm capacity.	-	Any	1
Tail Stand	-	Any	1

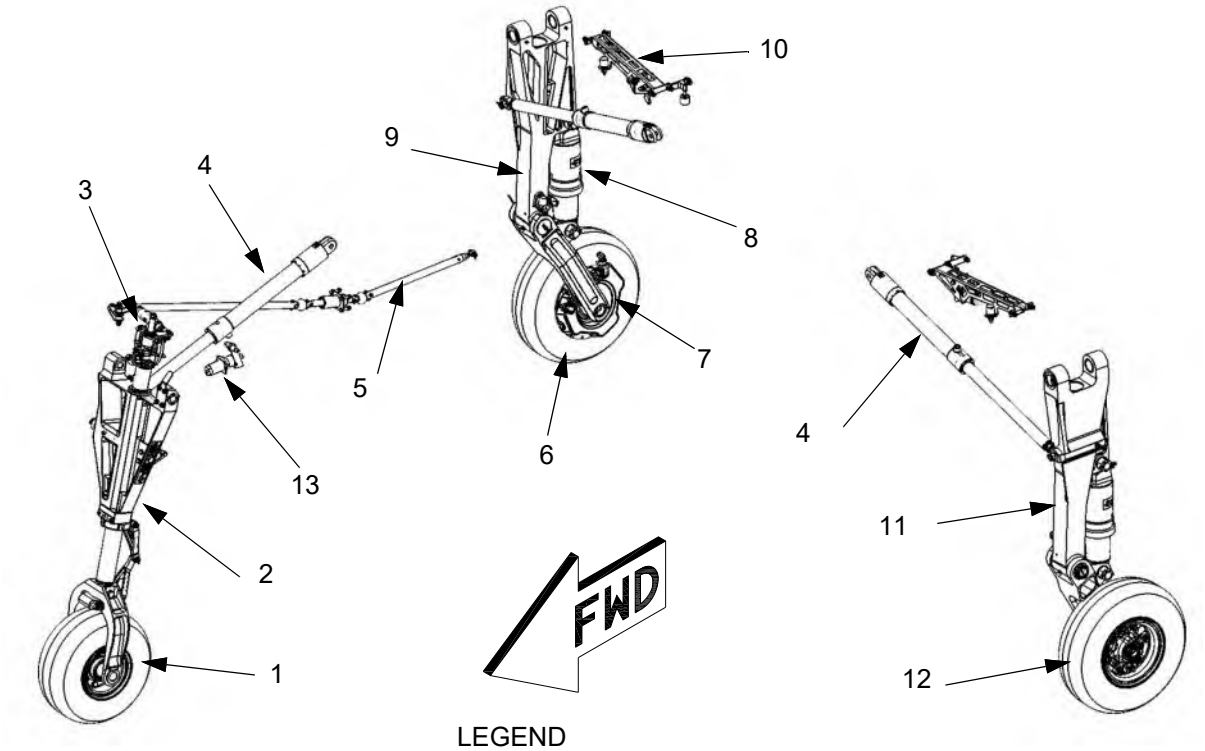

LEGEND

1. Nose Wheel
2. Nose Gear
3. Steering Assembly
4. Actuator
5. Steering Linkage
6. Right Main Wheel
7. Right Brake
8. Damper
9. Right Main Gear
10. Main Gear Uplock
11. Left Main Gear
12. Left Main Wheel
13. Nose Gear Uplock

2. Troubleshooting

Problem	Probable Cause	Solution
Main landing gear strut bottoms out or is “bouncy”.	Incorrectly charged strut.	Service the strut with oil and nitrogen. Refer to Chapter 12-10.2.E. and 32-10.2.B. (3).
	Leaking high pressure nitrogen valve.	Replace the valve.
	Leak between the valve and the strut.	Replace the O-ring on the valve.
	Leak around the piston rod.	Contact Epic Aircraft, LLC.
	Leak around the sealing washer.	Contact Epic Aircraft, LLC.
	Leak impossible to detect.	Replace the oil in the strut then service with nitrogen.Refer to Chapter 12-10.2.E. and 32-10.2.B. (3)
Nose gear strut bottoms out or is “bouncy”.	Incorrectly charged strut.	Service the strut with nitrogen.Refer to Chapter 12-10.2.F.
	Leaking high pressure nitrogen valve.	Replace the valve.
	Leak between the valve and the strut.	Replace the O-ring on the valve.
	Leak around the piston rod.	Contact Epic Aircraft, LLC.
	Leak around the sealing washer.	Contact Epic Aircraft, LLC.
	Leak impossible to detect.	Service with nitrogen.
Damage and/or corrosion of the landing gear.	Dirt, dust, damage, corrosive or humid atmosphere.	Clean and paint the effected area after thorough removal or corrosion.
Damage and/or corrosion of the damper piston rod.	Dirt, dust, damage, corrosive or humid atmosphere.	Contact Epic Aircraft, LLC. if there is damage to the piston rod surface. Light scratches may be removed using 400 grit sandpaper.

Problem	Probable Cause	Solution
Fatigue cracks.	Hard landing. Impact damage.	Contact Epic Aircraft, LLC. Do not fly the airplane until the problem is repaired.
Shimmy vibration.	Leakage of oil from the steering damper.	Replace the steering damper.

This Page Intentionally Left Blank

MAIN GEAR AND DOORS

1. Description

The structural components of the main gear are made of heat treated aluminum. They have hydro-pneumatic dampers to help dissipate the forces generated during takeoff and landing of the airplane. Hydraulic actuators are used to extend and retract the gear.

2. Maintenance Practices

A. Main Gear

Note: This procedure is typical for left and right landing gear.

(1) Removal

(a) Set the BATT 1 and BATT 2 switches to off.

(b) Disconnect external electrical power from the airplane, refer to Chapter 24-40.

(c) Jack the airplane, refer to Chapter 7-10.

(d) Remove the lower main gear door, refer to Chapter 32-10.2.D.

(e) Remove the wheel and brake, refer to Chapter 32-40.

Note: Cap and plug all open lines and fittings

(f) Remove access panel 7RW or 7LW as applicable, refer to Chapter 6-00).

(g) In the wheel well, disconnect the weight on wheels switch/wheel speed sensor wiring harness electrical connector.

(h) Remove the clamps that attach the brake line and wiring harness to the mail landing gear.

(i) Disconnect the upper landing gear door spring from the trunnion.

(j) Remove the landing gear door attach bracket from the trunnion.

CAUTION: Secure the actuator to avoid damaging or stressing the hydraulic lines and wire harness.

(k) Disconnect the actuator from the trunnion.

CAUTION: Use of two qualified personnel for this step is recommended.

(l) While supporting the main gear assembly, remove the bolts, washers, and nuts attaching the main landing gear brackets to the wing.

(m) Carefully remove the main landing gear from the wing.

(2) Installation

(a) Carefully put the main landing gear in position.

(b) Install the bolts, washers, and nuts that attach the main landing gear brackets to the wing.

(c) Connect the actuator to the trunnion and do the camber adjustment procedure (Step 3). Torque the nut and install a new cotter pin.

CAUTION: Do not route the electrical harness over MLG damper bolts..

(d) Connect the weight on wheels switch/wheel speed sensor wiring harness electrical connector in the wheel well.

(e) Install the clamps that attach the brake line to the mail landing gear.

(f) Install the wheel and brake, refer to Chapter 32-40.

(g) Lubricate the landing gear, refer to Chapter 12 -20.

(h) Install the lower landing gear door, refer to Chapter 32-10.2.D.

(i) Connect the upper landing gear door spring to the trunnion.

(j) Do the hydraulic system Inspection and Testing procedure, refer to Chapter 29-10.2.K.

(k) Verify there is a minimum clearance of 0.25” between any moving part of the main gear and the surrounding structure or equipment throughout the range of motion.

(l) Ensure the main gear doors are aligned to have gaps of 0.050” to 0.150” around the perimeter (excluding the outboard gear hinge) and be flush to the surrounding surface ± 0.050”.

(m) Lower the airplane and remove the jacks, refer to Chapter 7-10.

(n) Do the operational checks of the weight on wheels switch (refer to chapter 32-60) and wheel speed sensor (refer to Chapter 32-40).

(o) Install access panel 7RW or 7LW as applicable, refer to Chapter 6-00.

(3) Adjustment

Note: Camber is set at 0° ± 5° measured along the flat outboard face of the trunnion and may be adjusted as follows to correct tire wear:

Note: The toe in/out is not adjustable.

(a) Raise and level the airplane, refer to Chapter 7-10 and 8-20.

(b) Set the BATT 1 and BATT 2 switches to off.

(c) Remove the lower landing gear door from the attachment bracket and rod-ends.

(d) Remove the cotter pin, nut, and washer that attach the actuator and the door attachment bracket to the trunnion.

(e) Remove the cotter pin, nut, and washer that attach the door attachment bracket to the trunnion.

(f) Loosen the jam nut on the actuator rod end.

(g) Remove the actuator rod-end from the trunnion pin and adjust as follows (refer to figure 32-10.1, sheet 3):

(i) Outboard Tire Wear - Add negative camber by screwing the actuator rod-end out (lengthen the actuator).

(ii) Inboard Tire Wear - Add positive camber by screwing the actuator rod-end in (shorten the actuator).

(h) Verify thread engagement of the rod end is sufficient (witness hole blocked by threads) then tighten the jam nut.

(i) Reconnect the actuator to the trunnion.

(j) Verify the camber is +/- 5° using a calibrated protractor on the outboard face of the trunnion.

(k) Put the gear door attachment bracket in position and install the washer, nut, and cotter pin that attach it to the trunnion

(l) Install nut and cotter pin that attach the actuator to the trunnion.

(m) Support the rod end to prevent rotation and torque the jam nut on the actuator rod end to 108-125 ft-lbs. Install safety wire.

(n) Ensure the landing gear are down and locked.

(o) Lower the airplane and remove the jacks, refer to Chapter 7-10.

(4) Inspection

Note: Any main gear attachment hardware that is loose may be an indication of hard landings, over stress, or abnormal conditions that require further investigation. Refer to Chapter 51 for inspection procedures.

(a) Raise the airplane using aircraft jacks. Ensure there is sufficient clearance from the ground to retract and extend the landing gear, refer to Chapter 7-10.

(b) Wash the entire landing gear system using approved detergents, refer to Chapter 12.

(c) Remove the wheel assembly. Clean the nut, washers, spacers, and axle, refer to Chapter 32-40.

(d) Inspect the main gear looking for any signs of damage or wear including, but not limited to cracks, dings, scratches, over stress, and loose or missing components and hardware.

(e) Examine all mounting hardware for security, damage and corrosion.

(f) Examine the damper for leakage, condition, attachment, and security.

(g) Clean and inspect the damper piston for damage including, but not limited to, scratches, dents, gouges, and wear.

(h) Inspect the axle for damage, wear, corrosion, and evidence of over stress.

(i) Install the wheel assembly, refer to Chapter 32-40.

(j) After inspection, lubricate the main gear, refer to Chapter 12-20.

(k) Confirm the damper is properly serviced with nitrogen, refer to Chapter 12-10.

(l) Inspect the left and right up stop assemblies for condition and security.

(m) Ensure the landing gear are down and locked.

(n) Lower the airplane and remove the jacks, refer to Chapter 7-10.

Figure 32-10.1: Main Gear (Sheet 1 of 3)

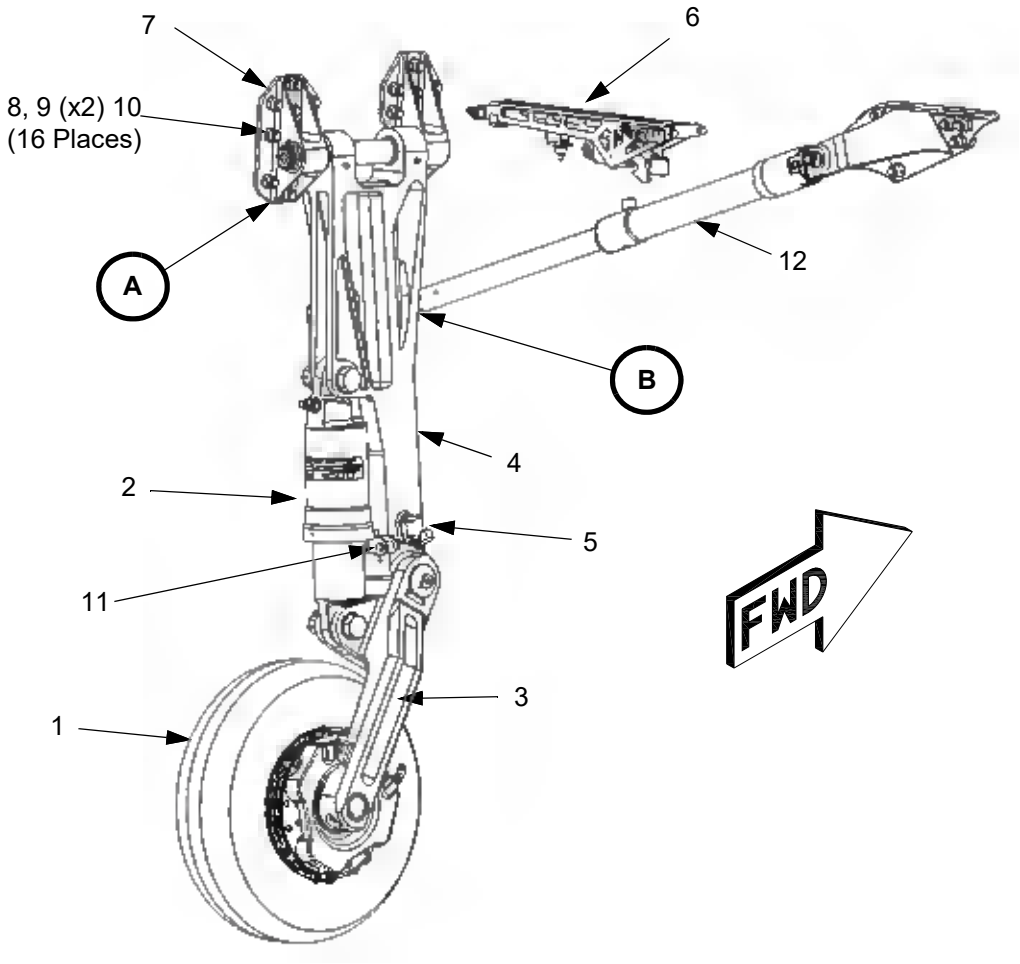

(Left gear shown. Right gear opposite.)

LEGEND

1. Wheel and Brake
2. Damper
3. Trailing Link
4. Trunnion
5. Weight on Wheels Switch
6. Up-lock Assembly
7. Bracket
8. Bolt
9. Washer
10. Locknut
11. Up-lock Roller
12. Actuator

Figure 32-10.2: Main Gear (Sheet 2 of 3)

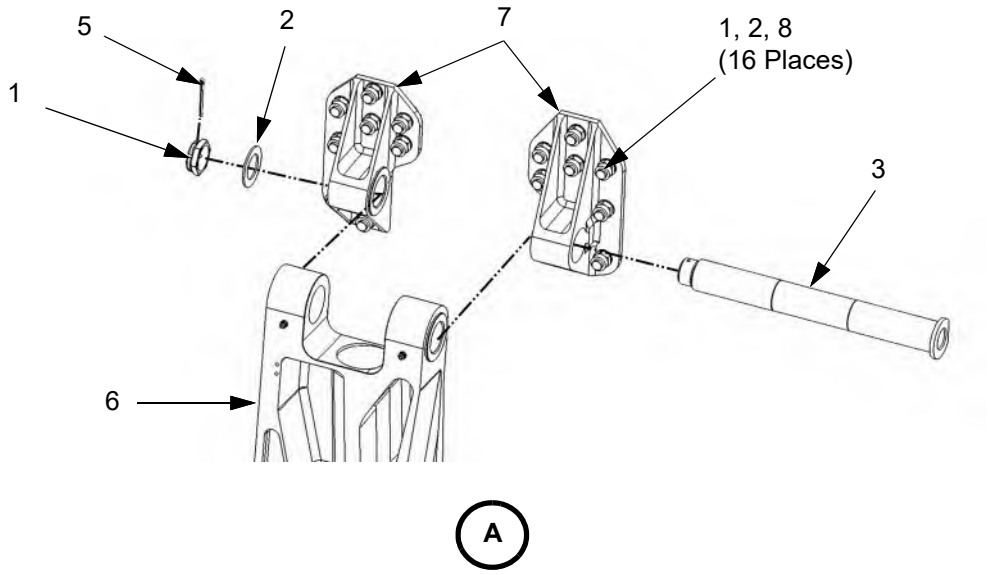

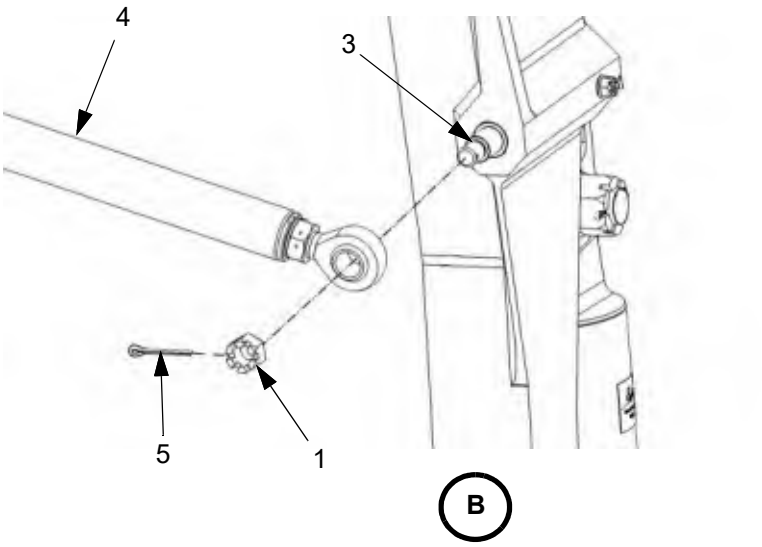

LEGEND

1. Nut
2. Washer
3. Pin
4. Actuator
5. Cotter Pin
6. Trunnion
7. Bracket
8. Bolt

(Left gear shown. Right gear opposite.)

Figure 32-10.2: Main Gear (Sheet 3 of 3)

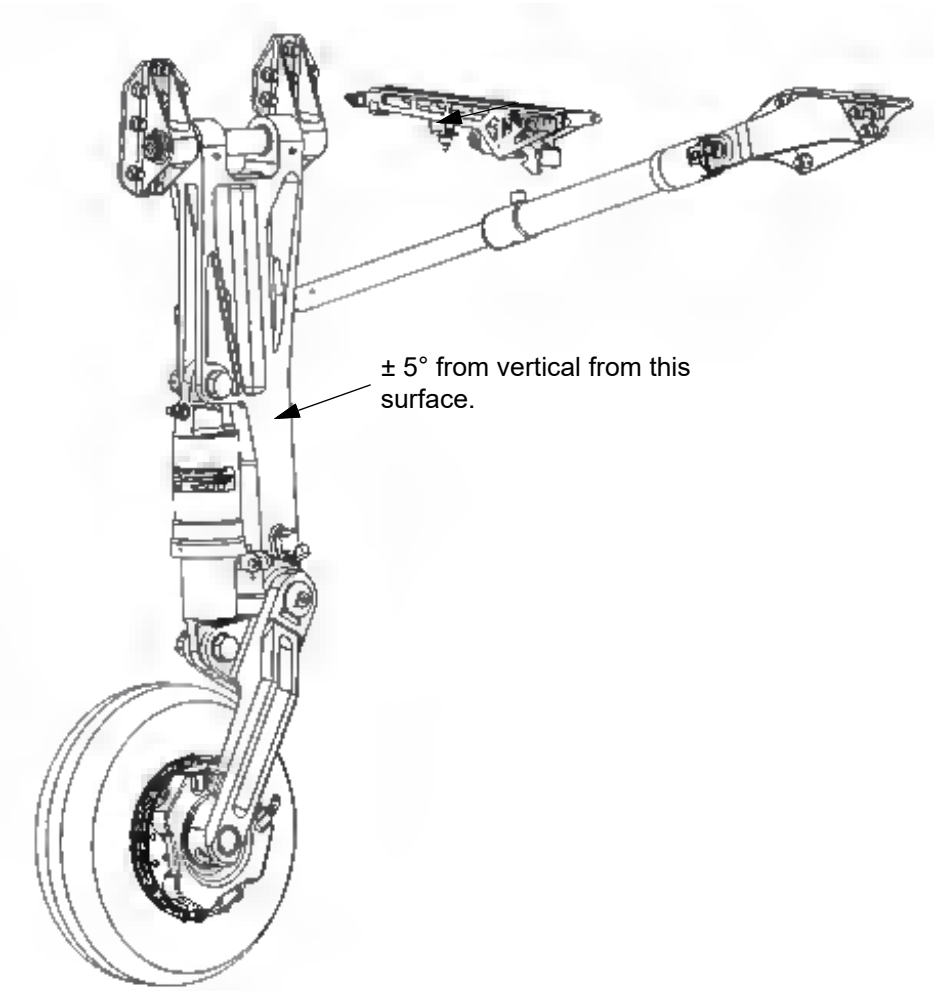

Camber Measurement Location

(Left gear shown. Right gear opposite.)

B. Damper

The main gear damper is a hydro-pneumatic damper. Design of the main gear permits removal and servicing of the damper without removing the main gear from the airplane.

(1) Removal

(a) Raise the airplane using aircraft jacks. Make sure the tires are clear of the ground. Refer to Chapter 7-10.

(b) Set the BATT 1 and BATT 2 switches to off.

(c) Remove all electrical power from the airplane, refer to Chapter 24-40.

(d) Remove the landing gear door.

(e) Support the wheel and fork assembly to prevent strain on the brake line when the damper is removed.

(f) Carefully open the servicing valve and release the pressure from the damper.

(g) Remove the castellated nuts, washers, and bolts attaching the damper to the main gear and remove the damper.

(2) Installation

(a) Put the damper in position on the main gear and install the bolts, washers, and castellated nuts. Torque the castellated nuts to 183 ft-lbs then continue to tighten to the next castellation for cotter pin installation. Maximum torque is 250 ft-lbs. Install the cotter pins.

(b) Charge the damper with nitrogen to 297 ± 3 psi.

(c) Install the landing gear door.

(d) Remove the supports holding the wheel and fork assembly.

(e) Make sure the landing gear is fully extended and locked and lower the airplane.

(3) Servicing

(a) Set the BATT 1 and BATT 2 switches to off.

(b) Remove electrical power from the airplane, refer to Chapter 24-40.

(c) Jack the airplane, refer to Chapter 7-10.

(d) Remove the damper from the main gear.

(e) Put the damper on a bench with the high pressure air valve facing up.

(f) Remove the valve cap then loosen the outer nut one to two turns while holding the inner nut stationary.

WARNING: The damper must be depressurized before fluid service. Severe injury to personnel and damage to equipment may occur.

WARNING: Cover the valve with a rag while releasing the pressure to capture any fluid expelled.

(g) Depress the valve to release the nitrogen and depressurize the damper.

(h) Remove the valve from the damper.

(i) Empty the hydraulic fluid out of the damper into a suitable container. Cycle the damper piston to remove as much fluid as possible.

(j) Fill the damper with 31.1 ± 0.5 US fl-oz (920 ± 15 mL) of hydraulic fluid (MIL-PRF-83282 or MIL-PRF-87257).

Note: It is recommended that the damper be filled with about half of the fluid volume in the fully collapsed position, and then slowly extended. This will pull the liquid to the lower half of the body from the internal mechanism. Then fill the damper the rest of the way. Alternatively, the damper may be filled slowly with it in the fully extended position and allowing the fluid to drain to the bottom half.

(k) Install the valve using a new seal and torque to 115- 125 in-lbs. Install safety wire.

Note: Lubricate the o-ring with hydraulic fluid.

(l) Charge the damper to 297 ± 3 psi with nitrogen (Type I, Class 2, per A-A-59503).

(m) Close the servicing valve and torque the nut to 50 - 60 in-lbs.

(n) Use soapy water to do a leak test on the valve.

(o) Install the valve cap.

(p) Install the damper onto the main gear.

(q) Lower the airplane and remove the jacks, refer to Chapter 7-10.

(4) Resealing

(a) Set the BATT 1 and BATT 2 switches to off.

(b) Remove electrical power from the airplane, refer to Chapter 24-40.

(c) Jack the airplane, refer to Chapter 7-10.

(d) Remove the damper from the main gear.

(e) Put the damper on a bench with the charging valve facing up.

(f) Remove the valve cap then loosen the outer nut one to two turns while holding the inner nut stationary.

WARNING: The damper must be depressurized before disassembly. Severe injury to personnel and damage to equipment may occur.

WARNING: Cover the valve with a rag while releasing the pressure to capture any fluid expelled.

(g) Open the charging valve to release the nitrogen and depressurize the damper.

(h) Remove the charging valve from the damper.

(i) Empty the hydraulic fluid out of the damper into a suitable container. Cycle the damper piston to remove as much fluid as possible.

(j) Remove the set screw from the side of the damper.

(k) Remove the seal insertion from the damper using adjustable pin spanner wrench.

(l) Remove the scraper, seal, back-up ring, and o-ring from the seal insertion, refer to Figure 32-10.3 sheet 2.

Note: Use caution not to damage the seal insertion when removing the seals.

(m) Lubricate the new seals with hydraulic fluid or Parker o-ring lubricant (MIL-PRF-83282/MIL-PRF-87257/SLUBE 884-2).

(n) Thoroughly clean the seal insertion and damper piston with isopropyl alcohol.

(o) Install the new scraper, seal, back-up ring, and o-ring on the seal insertion.

(p) Install seal insertion into damper assembly, flush or just recessed to the edge of the damper cylinder.

(q) Install the set screw.

Note: Only a positive indication of torque is required for the set screw. Do not over-tighten the set screw.

(r) Fill the damper with 31.1 ± 0.5 US fl-oz (920 ± 15 mL) of hydraulic fluid (MIL-PRF-83282 or MIL-PRF-87257).

Note: It is recommended that the damper be filled with about half of the fluid volume in the fully collapsed position, and then slowly extended. This will pull the liquid to the lower half of the body from the internal mechanism. Then fill the damper the rest of the way. Alternatively, the damper may be filled slowly with it in the fully extended position and allowing the fluid to drain to the bottom half.

(s) Install the valve using a new seal and torque to 115- 125 in-lbs. Install safety wire.

Note: Lubricate the o-ring with hydraulic fluid.

(t) Charge the damper to 297 ± 3 psi with nitrogen (Type I, Class 2, per A-A-59503).

(u) Close the charging valve and torque the nut to 50 - 60 in-lbs.

(v) Use soapy water to do a leak test on the charging valve.

(w) Install the valve cap.

(x) Install the damper onto the main gear.

(y) If removed, install and adjust the weight-on-wheel switch, refer to refer to Chapter 32-60.

(z) Lower the airplane and remove the jacks, refer to Chapter 7-10.

Figure 32-10.3: Damper (Figure 1 of 2)

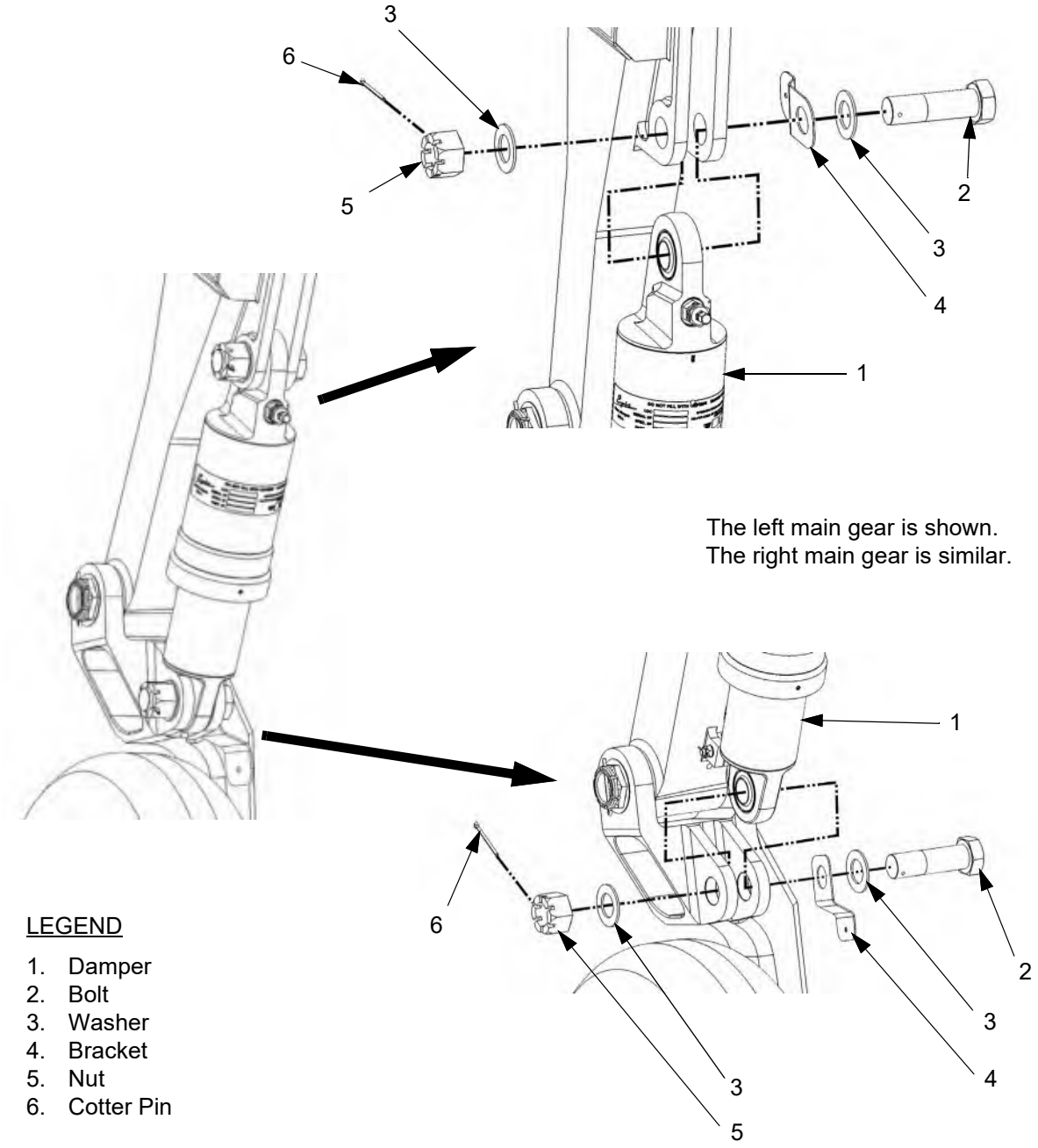

LEGEND

1. Damper
2. Bolt
3. Washer
4. Bracket
5. Nut
6. Cotter Pin

Figure 32-10.3: Damper (Figure 2 of 2)

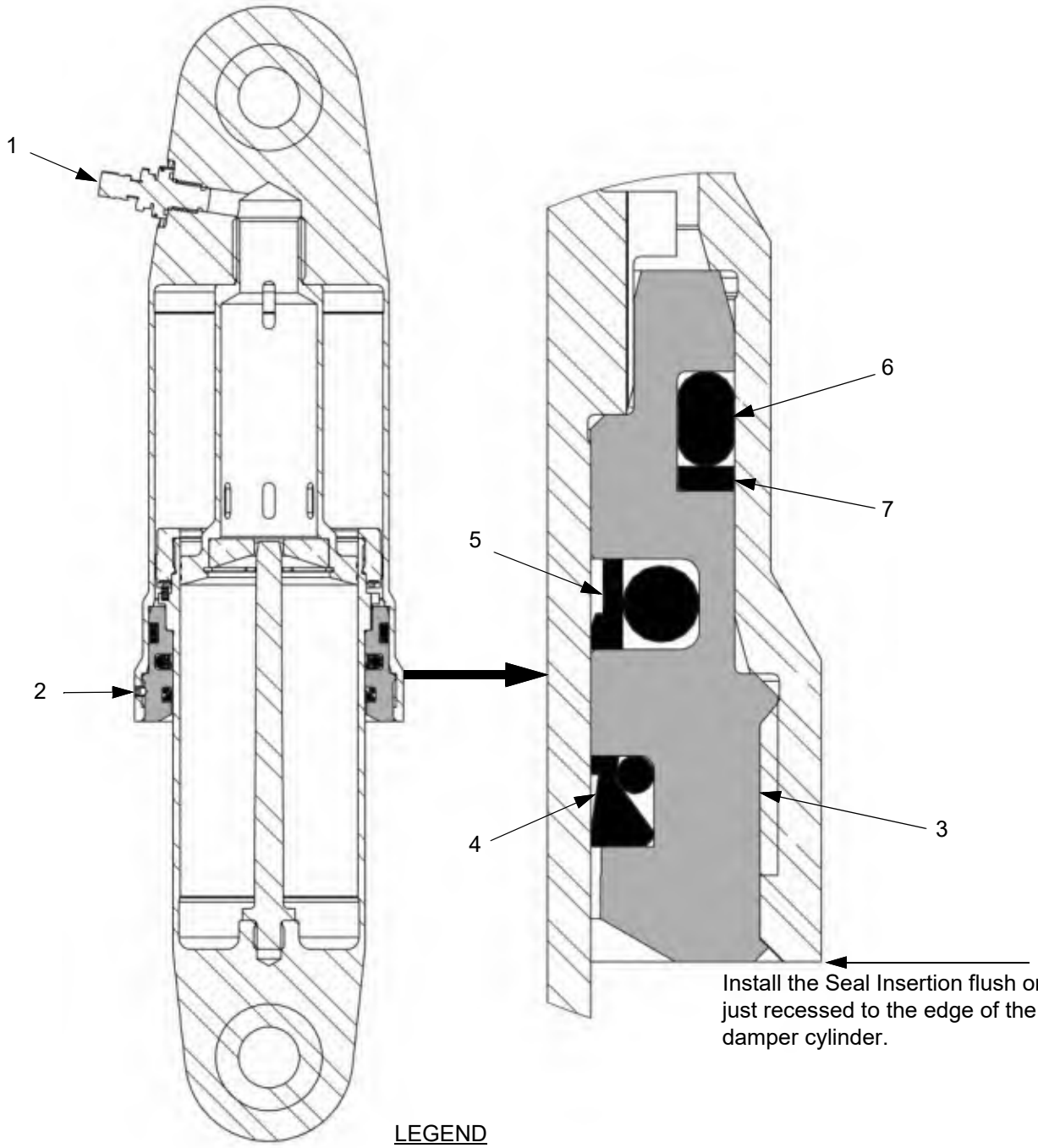

LEGEND

1. Charging Valve
2. Set Screw
3. Seal Insertion
4. Scraper
5. Seal
6. O-Ring
7. Back-Up Ring

C. Trailing Link

(1) Removal

(a) Set the BATT 1 and BATT 2 switches to off.

(b) Remove all electrical power from the airplane, refer to Chapter 24-40.

(c) Jack the airplane, refer to Chapter 7-10.

(d) Remove the lower landing gear door, Chapter 32-10.D.

(e) Secure or remove squat switch to prevent damage when removing the trailing link.

(f) Remove the wheel and brake, refer to Chapter 32-40.

(g) Remove the cotter pin, nut, washers, and bolt that connect the damper to the trailing link.

(h) Remove the cotter pin, nut, washer, and pin attaching the trailing link to the trunnion then remove the fork.

(2) Installation

(a) Hold the fork in position then attach it to the main gear using a pin, washer, castellated nut, and cotter pin.

(b) Tighten the castellated nut snug then loosen it to the nearest castellation for cotter pin installation.

(c) Install the bolt, washers, and nut that attach the damper to the trailing link.

(d) Torque the nut to 183 ft-lbs then continue to next castellation for cotter pin installation. Maximum torque is 250 ft-lbs. Install the cotter pin.

(e) Install the wheel, refer to Chapter 32-40.

(f) If removed, install the squat switch.

(g) Lubricate the fork, refer to Chapter 12-20.

(h) Ensure the landing gear are down and locked.

(i) Install lower landing gear door, Chapter 32-10.D.

(j) Lower the airplane and remove the jacks, refer to Chapter 7-10.

(3) 100 Hour Trailing Link Lubrication

(a) Lubricate the left and right main landing gear trailing links using Aeroshell 22. Grease should be added until clean grease is extruded between the trunnion bushings and trailing link bushings. Refer to figure 32-10.4.

Note: If grease does not extrude from both sides of the lower bracket assembly, the lower pivot pin should be removed, cleaned, and inspected. Inspect bushings and grease grooves while disassembled.

Figure 32-10.4: Trailing Link

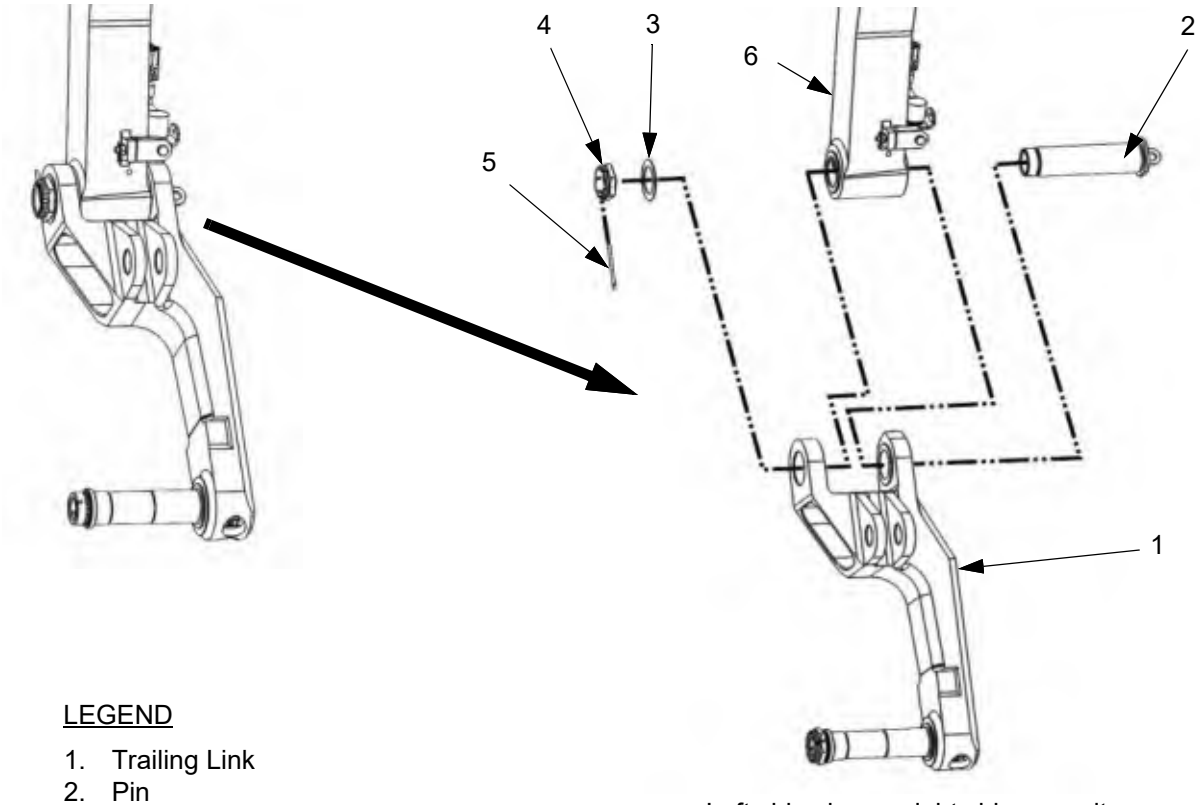

LEGEND

1. Trailing Link
2. Pin
3. Washer
4. Nut
5. Cotter Pin
6. Trunnion

Left side shown, right side opposite.

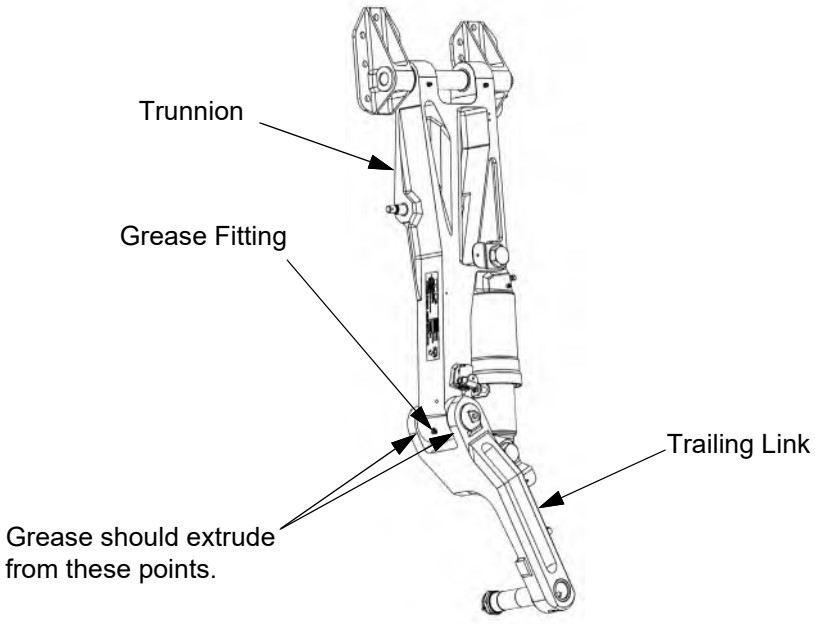

Right side shown, left side opposite.

D. Doors

An upper and lower door are attached to each main gear to create a single covering for the wheel wells when the landing gear is in the retracted position.

(1) Removal

Note: Mark the position of the landing gear door for correct alignment at installation.

Note: Make note of the washer thickness and location between the push-rods and door brackets when removing the lower door. Washer thickness and location are used for door alignment and push-rod clearance.

(a) Remove the bolts, washers, and nuts that attach the push-rods to the lower door.
(b) Remove the bolts and washers that attach the positioning arms to the attach bracket.
(c) Remove the lower door.
(d) Disconnect the spring from the upper door.
(e) Remove the screws that attach the upper door to the hinge.
(f) Remove the upper door.

(2) Installation

(a) Put the upper door in position and install the screws that attach it to the hinge.
(b) Connect the spring to the upper door.
(c) Put the lower door in position and install the bolts and washers that attach the lower door positioning arms to the attach bracket.
(d) Install the bolts, washers, and nuts that attach the push-rods to the lower door.
(e) Do the Adjustment procedure (Step 3) if the push-rod length changed or the initial washer thickness and position changed or is unknown.

(3) Adjustment

When the main gear are retracted, the gear doors should be snug to avoid gaps between the doors and the wings as well as vibration during normal operation but not so tight that the attachment hardware causes stress and damage to the doors.

(a) Jack the aircraft. Make sure there is sufficient clearance from the ground to permit retraction and extension of the gear, refer to Chapter 7-10.
(b) Connect a hydraulic service cart to the airplane.
(c) Connect shop air to the air quick disconnect on the reservoir (SN:K003-K010).
(d) Connect a ground power unit to the airplane, refer to Chapter 24-40.

(e) Turn the hydraulic service cart on. The airplane hydraulic system should build pressure until the actuators are pressurized and the accumulator is charged. Watch the pressure gauge on the hydraulic service cart to verify the buildup of pressure and the shifting of the re-circulation valve (pressure should build to approximately 2500 psi then drop off to less than 100 psi when the system shifts into re-circulation mode).

(f) Retract the landing gear.

(g) Check the fit of the door against the wing. They must be aligned to have gaps of 0.050” to 0.150” around the perimeter (excluding the outboard gear hinge) and be flush to the surrounding surface ± 0.050”.

(h) Extend the landing gear to make adjustments.

(i) Loosen the jam nuts on the rod ends then lengthen or shorten the rods, as necessary. Verify thread engagement of the rod ends is sufficient (witness hole blocked by threads) then tighten the jam nuts.

(j) Loosen the screws on the gear attachment bracket then move the door as necessary. Tighten the screws to secure the door position.

Note: Washers between the door brackets and push-rods/positioning arms may be any combination of 0.016, 0.032, or 0.063 thickness to ensure proper alignment.

Note: Fastener head orientation shown is optional. The fastener head forward is preferred.

(k) Retract the landing gear to confirm the fit.

(l) Extend the landing gear.

(m) Ensure the landing gear is fully extended and locked then turn off the hydraulic service cart.

(n) Disconnect the shop air (SN:K003-K010).

(o) Disconnect the hydraulic service cart.

(p) Ensure the BATT 1 and BATT 2 switches are off.

(q) Disconnect external electrical power from the airplane (refer to Chapter 24-40).

(4) Inspection

(a) Visually inspect the gear doors looking for any signs of damage or wear including, but not limited to cracks, dings, scratches, warping, and loose or missing hardware. If damage is found, do a tap test (refer to Chapter 51-10) and contact Epic Aircraft, LLC.

(b) Cracks at the drag linkage attachment bracket and warping of the gear door may indicate the door is too tightly rigged.

(c) Check the brackets for attachment and wear.

Figure 32-10.5: Main Gear Door (Sheet 1 of 3)

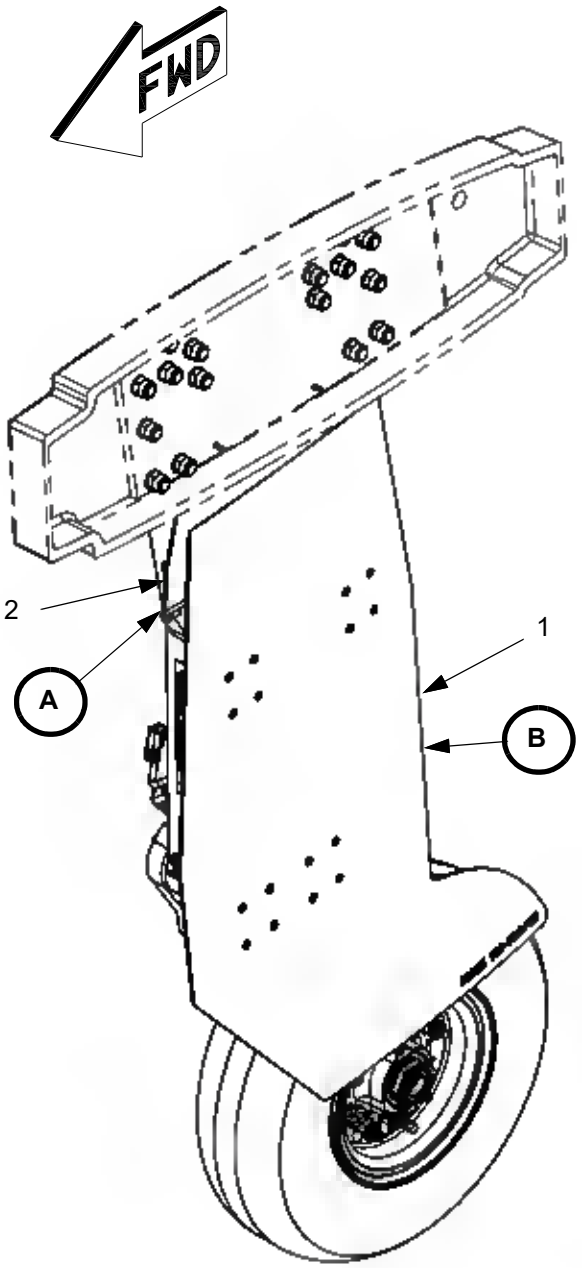

(Left side shown, right side opposite.)

LEGEND

1. Lower Door
2. Upper Door

Figure 32-10.5: Main Gear Door (Sheet 2 of 3)

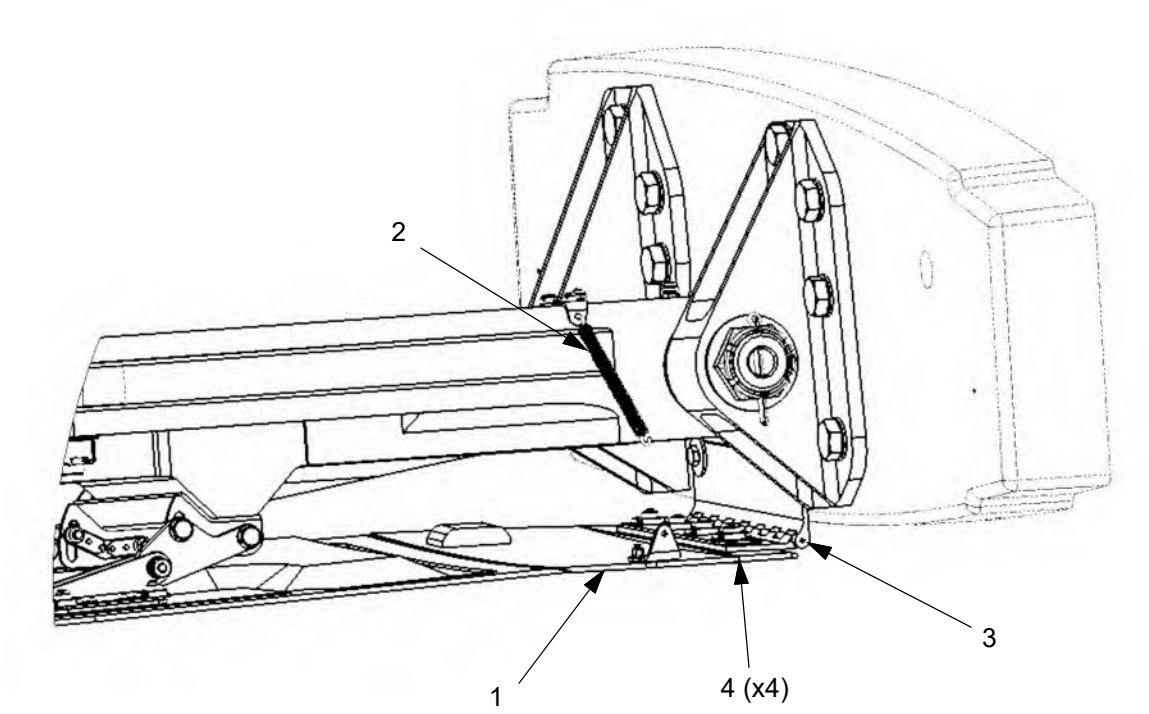

Upper Door

(Gear shown retracted.)

(Right side shown, left side opposite.)

A

LEGEND

1. Upper Door
2. Spring
3. Hinge
4. Screw

Figure 32-10.5: Main Gear Door (Sheet 3 of 3)

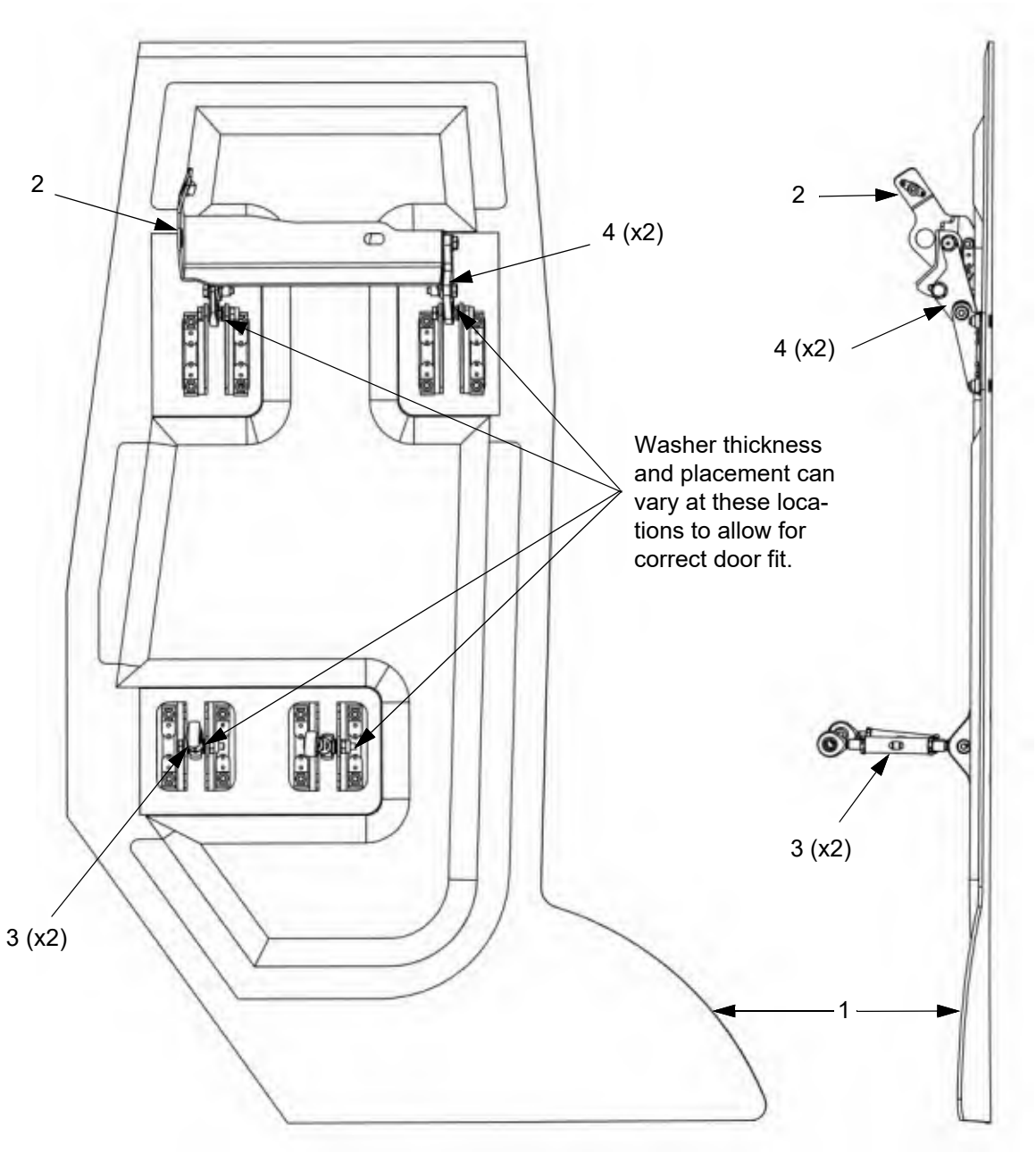

Lower Door

(Right side shown, left side opposite.)

B

LEGEND

1. Lower Door
2. Attach Bracket
3. Push-Rod
4. Positioning Arm

NOSE GEAR AND DOORS

1. Description

The structural components of the nose gear are made of heat treated aluminum. It has an integral hydro-pneumatic damper to help dissipate the forces generated during takeoff and landing of the airplane. A hydraulic actuator is used to extend or retract the gear. Kick out arms, a contact plate, and linkages are attached to the nose gear for steering of the airplane.

2. Maintenance Practices

A. Nose Gear

(1) Removal

(a) Jack the airplane, refer to Chapter 7-10.

Note: Make sure there is enough clearance to swing the landing gear.

(b) Set the BATT 1 and BATT 2 switches to off.

(c) Remove the cowling (refer to Chapter 71-10).

(d) Remove the nose wheel assembly (refer to Chapter 32-40).

(e) Disconnect the electrical harness from the taxi light.

(f) Disconnect the actuator from the nose gear trunnion.

Note: Secure the actuator to avoid damaging or stressing the hydraulic lines and electrical harness. Do not leave the actuator hanging supported by the hydraulic lines.

(g) Disconnect the steering damper from the engine mount attach bracket.

(h) While supporting the nose gear assembly:

(i) Remove the cotter pins, nuts, washers, and pin washers.

(ii) Carefully remove the pins that attach the nose gear assembly to the engine mount.

(i) Remove the nose gear assembly.

(j) Remove the shim washers from the engine mount.

(2) Installation

(a) Carefully put the nose landing gear assembly in position in the engine mount.

(b) Put the shim washers between the engine mount and trunnion.

(c) Install the pins that attach the nose gear assembly to the engine mount.

(d) Install the pin washers, washers, and nuts.

(e) Tighten the nuts finger tight plus one castellation and install a new cotter pins.

Note: Make sure gear swings freely by hand, mounting hardware should not create pressure upon the engine mount bushing.

(f) Connect the steering damper to the engine mount attach bracket.

(g) Temporarily connect the actuator to the trunnion and check/adjust the nose landing gear rake, refer to Step (3).

(h) Connect the electrical harness to the taxi light.

(i) Install the nose wheel assembly (refer to Chapter 32-40).

(j) Lubricate the nose landing gear (refer to Chapter 12-20).

(k) Do an operational check of the taxi light (refer to Chapter 33-40).

(l) Do the landing gear operational check (refer to Chapter 32-30).

(i) Verify there is a minimum clearance of 0.25" between any moving part of the nose gear and the surrounding structure or equipment throughout the range of motion.

(ii) Ensure the position switches are rigged to depress when the gear is fully retracted.

(iii) Ensure the nose gear doors are aligned to have gaps of 0.050" to 0.150" around the perimeter (excluding the outboard gear hinge) and be flush to the surrounding surface ± 0.050".

(m) Set the BATT 1 and BATT 2 switches to off.

(n) Remove external electrical power to the airplane (refer to Chapter 24-40).

(o) Lower the airplane and remove the jacks (refer to Chapter 7-10).

(p) Install the cowling (refer to Chapter 71-10).

(3) Rake Adjustment

When extended, the angle of the nose gear is raked forward 9° ± 2° from vertical when measured on the flat aft or forward face of the strut.

(a) Jack and level the airplane (refer to Chapter 7-10 and Chapter 8-20).

Note: Make sure there is enough clearance to swing the landing gear.

WARNING: Do not rotate piston rod within housing when actuators are fully extended/locked.

(b) Loosen the jam nut on the actuator rod-end.

(c) Disconnect the actuator from the trunnion then adjust the rod end as follows:

(i) Increase the Rake - Unscrew the rod end on the actuator.

(ii) Decrease the Rake - Screw in the rod end on the actuator.

(d) Connect the actuator to the trunnion and check the rake angle.

(e) When the rake angle is set, torque the rod-end jam nut to 108 to 125 ft-lbs. Hold piston rod stationary while torquing rod-end nut. Install safety wire.

(f) Install the washer and nut that attach the actuator to the trunnion. Torque the nut to a minimum of 55 ft-lbs, then tighten to the next castellation and install a new cotter pin. Do not exceeding 95 ft-lbs.

(g) Do the landing gear operational check (refer to Chapter 32-30).

(h) Lower the airplane and remove the jacks (refer to Chapter 7-10).

(4) Inspection

Note: Any nose gear attachment hardware that is loose or has broken or missing torque seal may be an indication of hard landings, over stress, or abnormal conditions that must be investigate further. Refer to Chapter 51 for structural inspection procedures.

(a) Raise the airplane using aircraft jacks. Ensure there is sufficient clearance from the ground to work around the nose gear assembly. Refer to Chapter 7-10.

(b) Install a tail stand.

(c) Wash the entire landing gear system using approved detergents. Refer to Chapter 12-20.

(d) Remove the nose wheel then clean the nut, washers, spacers, and axle.

(e) Visually inspect the nose gear looking for any signs of damage or wear including, but not limited to cracks, dings, scratches, over stress, and loose or missing components and hardware.

(f) Examine all mounting hardware for torque seal. Missing or broken torque seal may be evidence of conditions requiring further investigation.

(g) Examine the damper for leakage, condition, attachment, and security.

(h) Clean and inspect the damper piston for damage including, but not limited to, scratches, dents, gouges, and wear.

(i) Inspect the axle for damage, wear, corrosion, and evidence of over stress.

(j) Inspect the centering pin, turn radius travel stops, tow bar attachment bracket, and associated hardware for damage, wear, corrosion, and cracks.

(k) Inspect the scissor link, its attachment points, associated components, and hardware for wear and security.

(l) Reinstall the nose wheel.

(m) Lubricate the nose gear assembly (refer to Chapter 12-20.2.F.).

(n) Service the strut with nitrogen (refer to Chapter 12-10.2.F.(2).

(o) Make sure the three green (NOSE, LEFT, and RIGHT) down and locked indications are present on both annunciation panels.

(p) Lower the airplane and remove the jacks (refer to Chapter 7-10).

Figure 32-20.1: Nose Gear (Sheet 1 of 2)

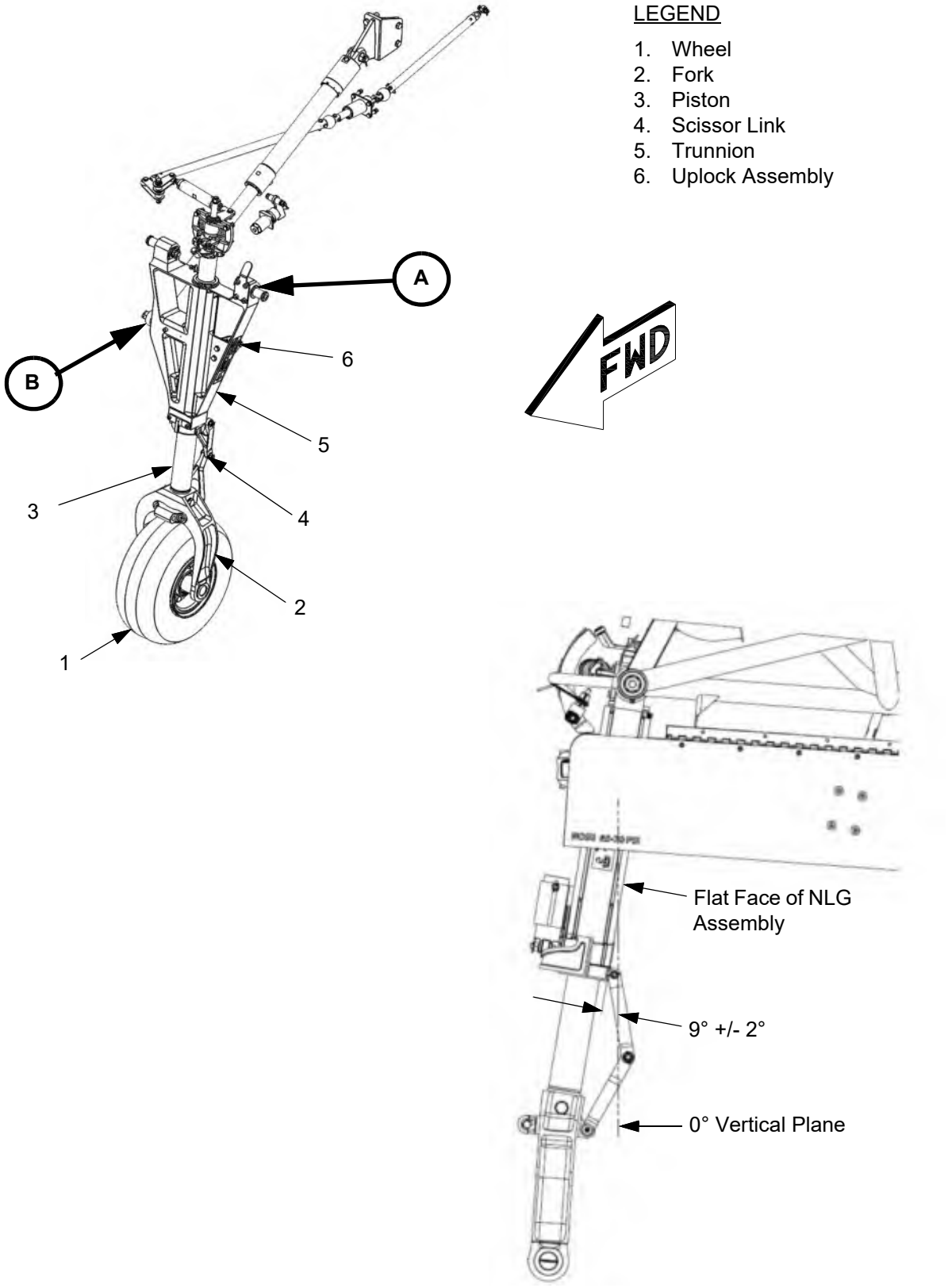

Figure 32-20.1: Nose Gear (Sheet 2 of 2)

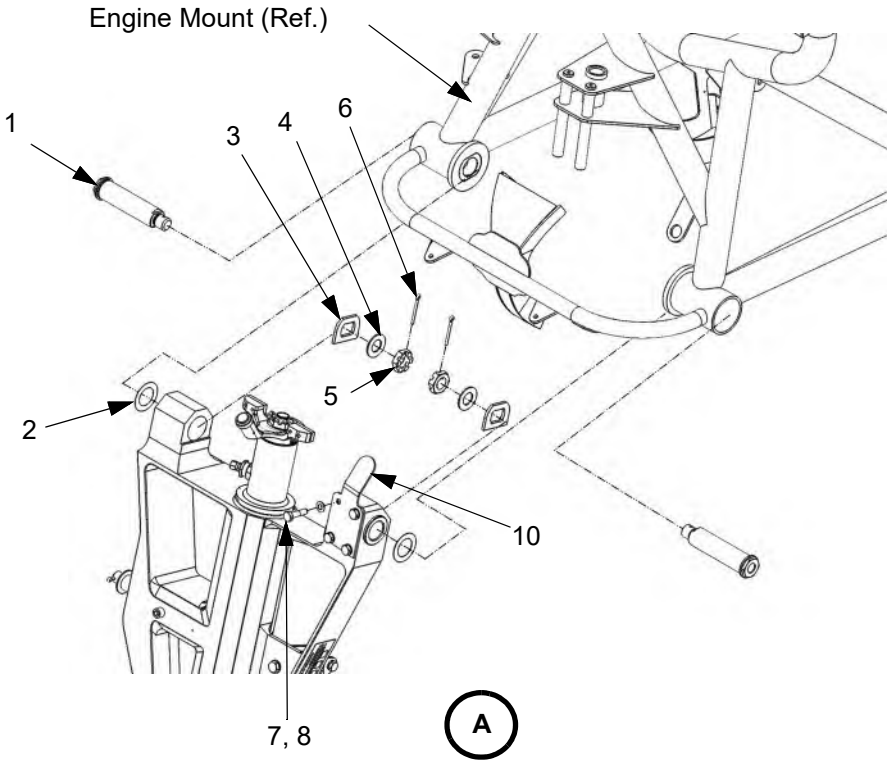

LEGEND

1. Pin
2. Shim Washer
3. Pin Washer
4. Washer
5. Nut
6. Cotter Pin
7. Bolt
8. Washer
9. Actuator
10. Up Switch Plate

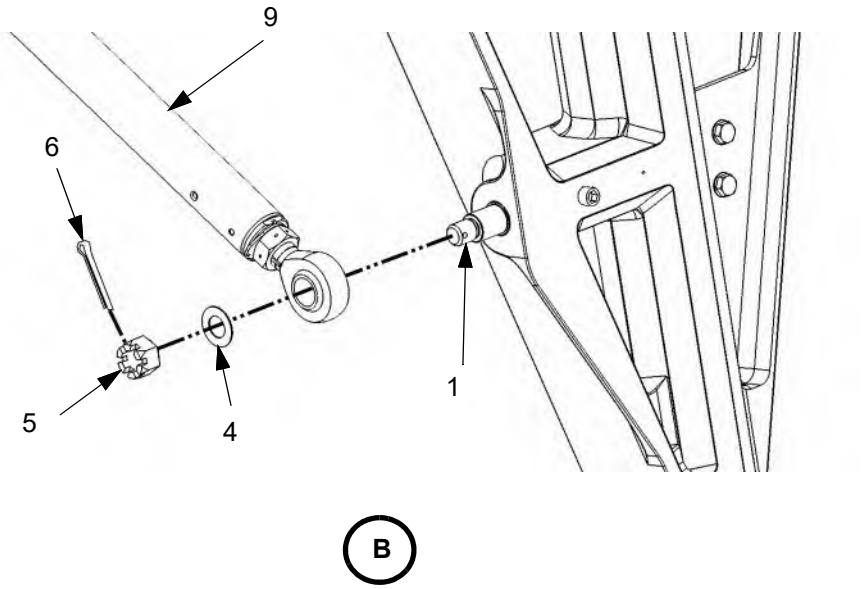

B. Nose Gear Strut

(1) Removal

(a) Remove the nose gear from the airplane.

(b) Remove the wheel.

(c) Remove the valve cap from the high pressure air valve.

(d) Slowly release the air valve nut to release the nitrogen and depressurize the strut.

WARNING: The strut must be depressurized before disassembly otherwise severe injury to personnel and damage to equipment may occur.

WARNING: Cover the valve with a rag while releasing the pressure to capture any fluid expelled.

(e) Remove the air valve.

(f) Remove the slotted nut and washer attaching the distance piece, steering arm, and strut to the nose gear housing.

(g) Remove the steering arm, distance piece, distance ring, and slip ring.

(h) Slide the strut and fork out of the nose gear housing.

(i) Remove the distance ring and the slip ring.

(j) Cap the air valve hole or drain the oil, as necessary.

(k) Disconnect the scissor link from the strut and the fork.

(l) Disconnect the fork from the strut.

(2) Installation

(a) Put the strut into the nose gear housing.

(b) Install the slip ring, distance ring, and distance piece then the steering arm.

(c) Install the washer and slotted nut. Torque the nut 50 to 65 ft-lbs. After final torque has been set and the rest of the assembly has been completed, check gear for free return to center in both directions. rotate nose wheel to full steering stop and release gear. nose wheel should return to center without any assistance.Install a new cotter pin.

(d) Install the high pressure air valve. Valve installation torque is 120 ± 5 in-lbs. Valve closing torque is 55 ± 5 in-lbs. Cap installation torque is 5 to 15 in-lbs.

(e) Install the fork.

(f) Install the scissor link.

(g) Service the strut with oil and nitrogen (refer to Chapter 12-10).

(h) Install the wheel.Ensure the landing gear is fully extended and locked then remove the tail stand and lower the airplane.

Figure 32-20.2: Nose Gear Strut

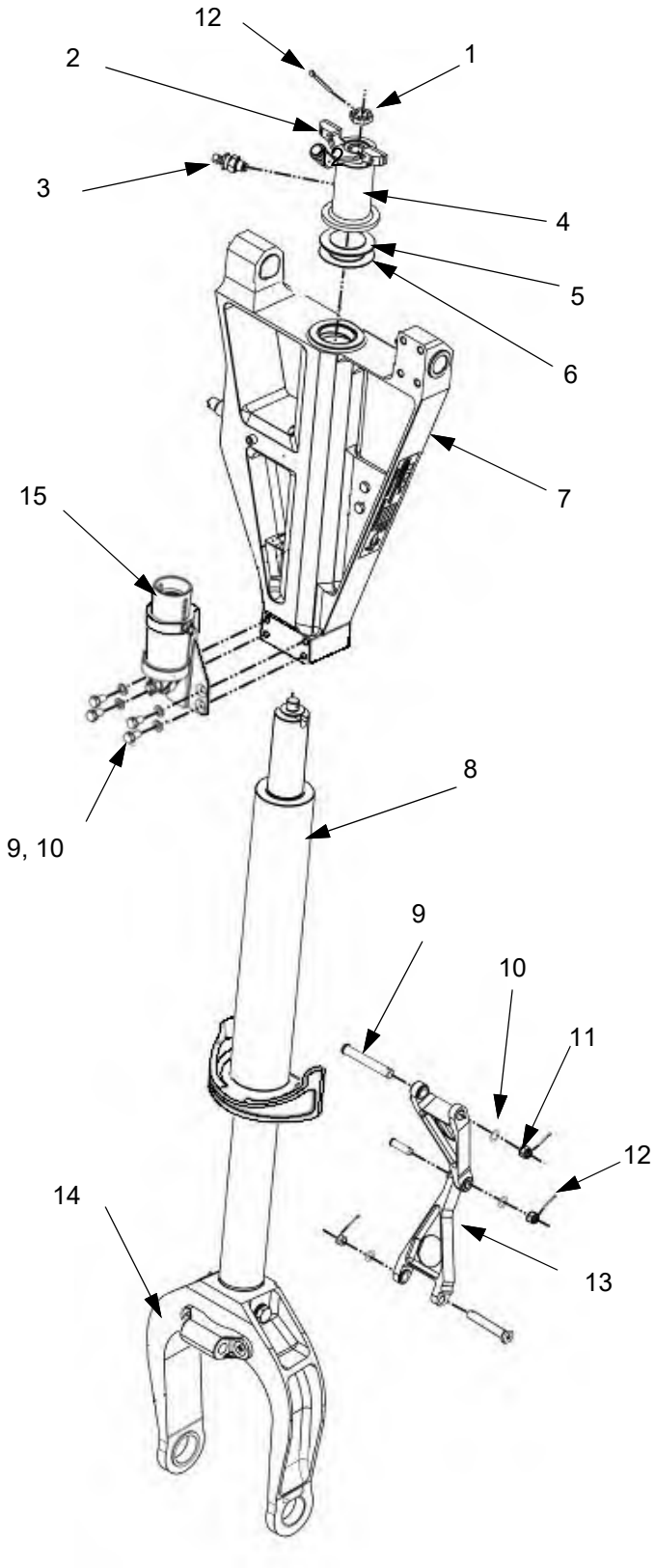

LEGEND

1. Slotted Nut
2. Steering Arm
3. High Pressure Air Valve
4. Distance Piece
5. Distance Ring
6. Slip Ring
7. Housing
8. Damper
9. Bolt
10. Washer
11. Nut
12. Cotter Pin
13. Scissor Link
14. Fork
15. Nose Wheel Centering Device
16. Screw

C. Nose Wheel Centering Device

The nose wheel centering device is a spring powered pushrod with a roller on the end. The roller travels along a ramp on the nose gear forcing the nose wheel into a direction parallel to the centerline of the airplane.

Note: Removal of the nose wheel centering device housing from the trunnion is not required for regular maintenance.

(1) Disassembly

(a) Using a c-clamp or bar clamp, compress the centering device spring.

Note: Place one end of the clamp on the lower (flat) surface of the centering ramp and the other end on the flat surface of the spring cap to compress the spring.

Note: Adjust the amount of compression with the clamp to ease removal of the bolt.

(b) With the clamp in place, remove the cotter pin, nut, and washer from the spring cap bolt.

(c) Carefully remove the bolt from the spring cap.

WARNING: Use care when releasing the clamp. The centering spring is in compression.

(d) With the spring cap bolt removed, slowly release the clamp to allow the spring to fully extend.

(e) Remove the clamp, spring cap, and spring from the housing.

(f) Remove the cotter pin, nut, washer, and bolt that attach the roller to the pushrod.

Note: Rotate the pushrod in the housing as needed to remove the roller.

(g) Remove the roller from the pushrod.

(h) Remove the pushrod from the centering device housing.

(i) Do the Servicing procedure, refer to step (3).

(2) Reassembly

(a) Apply a thin layer of Aeroshell 22 to the outer surface of the pushrod.

(b) Place the pushrod in the housing.

(c) Install the roller on the pushrod with the bolt, washer, and nut (bolt head aft).

Note: Rotate the pushrod in the housing as needed to install the roller.

(d) Torque the nut to 95-110 in-lbs. and install a new cotter pin.

(e) Rotate the pushrod so the roller is correctly aligned on the centering ramp.

(f) Apply a thin layer of Aeroshell 22 to the outer surface of the spring.

(g) Put the spring inside the pushrod and place the spring cap on top of the spring.

(h) Use a c-clamp or bar clamp to compress the spring.

Note: Place one end of the clamp on the lower (flat) surface of the centering ramp and the other on the flat surface of the spring cap to compress the spring.

(i) Make sure the slots in the pushrod are aligned with the holes in the housing.

(j) Compress the spring with the clamp to align the through hole in the spring cap with the holes in the housing.

(k) Install the bolt through the housing and spring cap.

(l) Install the washer and nut on the spring cap bolt and torque the nut to 30-40 in-lbs. then back the nut off two castellations.

(m) Make sure the pushrod moves freely in the housing, if not, backing the nut off one more castellation is allowed. Install a new cotter pin.

(3) Servicing

(a) Disassemble the centering device, refer to Step (1).

(b) Thoroughly clean all components, including the bore of the centering device housing, with solvent.

(c) Inspect the centering device as follows:

(i) Inspect the housing, pushrod, and spring for corrosion, damage, and excessive wear.

(ii) Inspect the attachment hardware for corrosion and damage.

(iii) Inspect the centering device ramp for condition, wear, and security. A ramp with indentations or flat spots should be replaced.

(iv) Inspect the roller for wear, roundness, freedom of rotation, and condition. A roller that is not concentric, has flat spots, or does not spin freely should be replaced.

(d) Reassemble the centering device, refer to Step (2).

(e) Lubricate the centering device as follows:

(i) Jack the airplane, refer to Chapter 7-10.

(ii) Service the centering device with Aeroshell 22 grease through the lubrication fitting until grease extrudes between the housing and the pushrod.

(iii) Manually rotate the nose wheel to the left and right stops and verify the centering device returns the nose wheel to center.

(iv) Add more grease while rotating the nose wheel side-to-side to distribute grease to achieve full travel of the centering device as needed.

Figure 32-20.3: Nose Wheel Centering Device

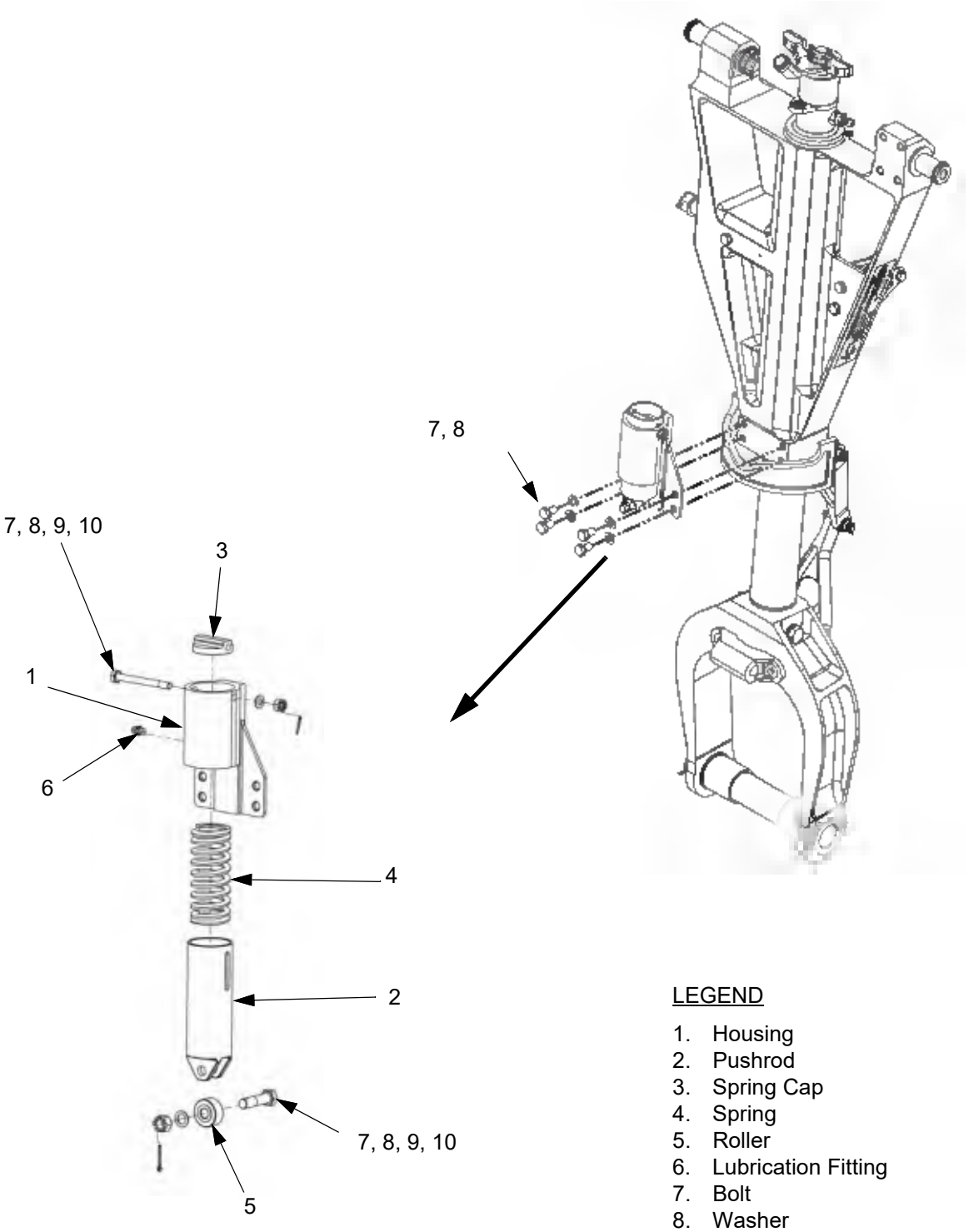

LEGEND

1. Housing
2. Pushrod
3. Spring Cap
4. Spring
5. Roller
6. Lubrication Fitting
7. Bolt
8. Washer
9. Nut
10. Cotter Pin

D. Steering Damper

The steering damper is a hydraulically damped pushrod assembly connected to the nose gear strut housing and to the strut. The damper moderates side to side rotation of the nose wheel and strut.

Note: MIL-PRF-83282 and MIL-PRF-87257 are both acceptable fluids, AeroShell #31 or Brayco 881 are preferred.

(1) Removal

(a) Remove the two bolts, washers, castellated nuts, and cotter pins attaching the damper to the nose gear housing and the strut.

(b) Remove the steering damper.

(2) Installation

(a) Installation is the reverse of removal.

(b) Verify correct operation of the device.

(3) Inspection

(a) Inspect the nose wheel steering damper for condition, leakage, and security.

(b) Inspect the attachment hardware for condition and security.

(4) Servicing

Note: The steering damper can be access through the nose wheel well, so cowling removal is not required, but preferred for ease of access to the damper.

(a) Remove the engine cowling (refer to Chapter 71-10).

(b) Remove the fill plug.

(c) Completely fill the damper with hydraulic fluid conforming to MIL-PRF-83282 or MIL-PRF-87257.

(d) Cycle the damper fully from side-to-side until there are no visible air bubble at the fill hole.

(e) Install the fill plug using anti-seize conforming to MIL-PRF-83483. Torque the fill plug to 12 - 15 in-lbs.

(f) Cycle the damper fully from side-to-side to make sure it moves freely.

(g) Install the engine cowling (refer to Chapter 71-10).

Figure 32-20.4: Nose Wheel Steering Damper

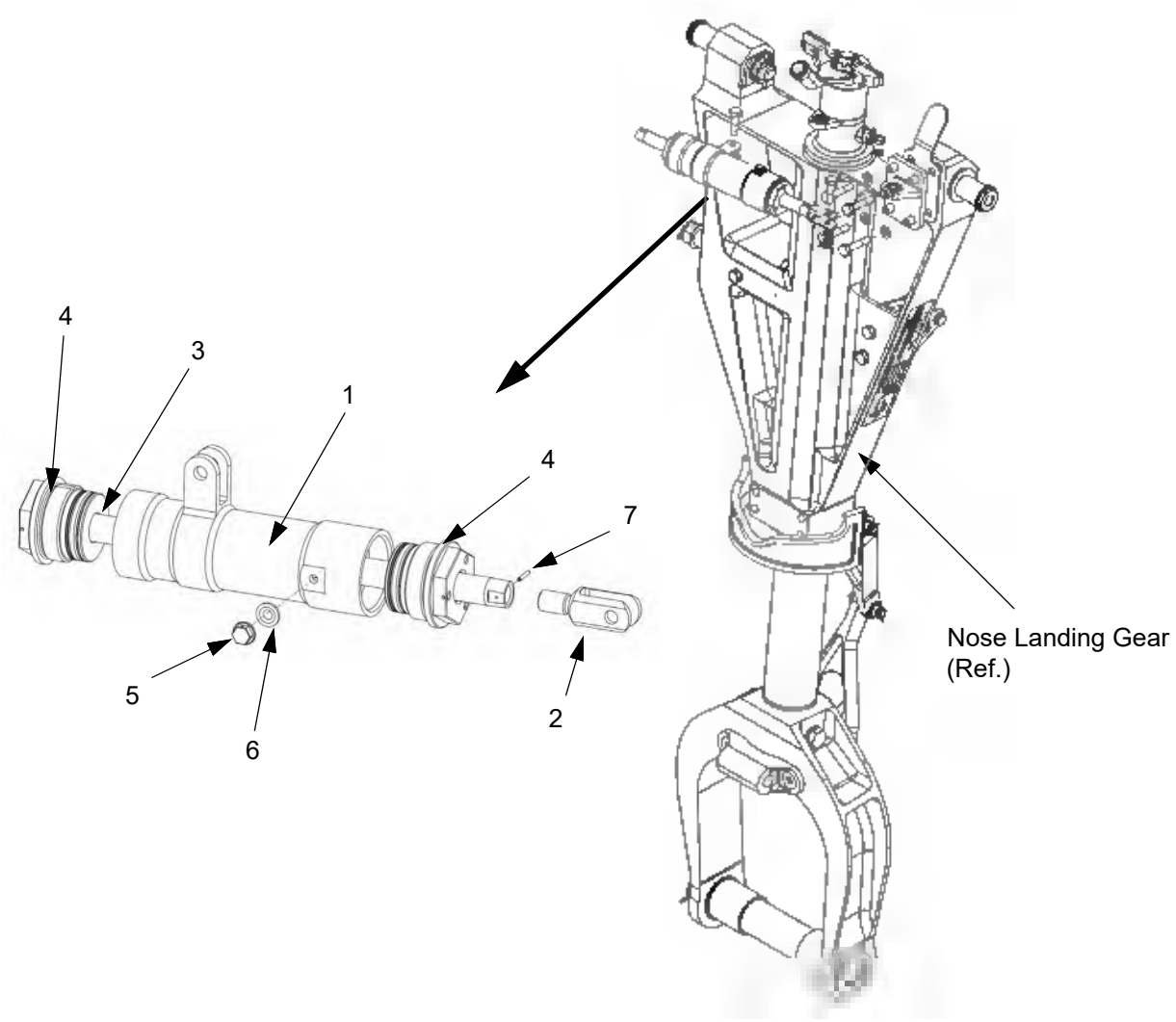

LEGEND

1. Body
2. Clevis
3. Shaft Assembly
4. End Cap
5. Fill Plug
6. Seal
7. Spring Pin

E. Nose Gear Doors

The nose gear doors are part of the lower cowling. They are held open by a spring loaded over-center actuator arm attached to control rods and are closed when the nose gear forces the actuator arm up when the nose gear is retracted.

(1) Removal

(a) Remove the nut, washers, and bolt that attach the nose gear door pushrod to the retraction arm.

(b) Support the doors and remove the screws that attach the door to the hinge.

(c) Remove the doors.

(2) Installation

(a) Put the door in position and install the screws that attach the door to the hinge.

(b) Install the bolt, washers, and nut that attach the door pushrod to the retraction arm.

(3) Adjustment

The best alignment and positioning of the nose gear doors occur when the nose gear is retracted and the doors are closed.

(a) Raise the airplane using aircraft jacks. Ensure there is sufficient clearance from the ground to retract and extend the landing gear. Refer to Chapter 7-10.

(b) Retract the landing gear.

(c) Observe the position of the nose gear doors. They must be aligned to have gaps of 0.050” to 0.150” around the perimeter (excluding the outboard gear hinge) and be flush to the surrounding surface ± 0.050”.

Note: Internal components of the nose gear door system can be seen in the retracted position by removing the side cowling. Remove cowling as necessary.

(d) Extend the landing gear.

(e) Adjust the control arms and/or the stop bolts in the system, as necessary.

(f) Retract the landing gear to verify the nose gear doors positioning.

(g) Continue this process until the doors are perfectly positioned.

(h) Ensure the landing gear is fully extended and locked then remove the tail stand and lower the airplane.

(4) Inspection

(a) Raise the airplane using aircraft jacks. Ensure there is sufficient clearance from the ground to retract and extend the landing gear. Refer to Chapter 7-10.

(b) Install a tail stand.

(c) Visually inspect the gear doors looking for any signs of damage or wear including, but not limited to cracks, dings, scratches, warping, and loose or missing hardware.

(d) If damage is found, do a tap test (refer to Chapter 51-10) and contact Epic Aircraft, LLC.

(e) Inspect the mechanical components of the nose gear door system for condition and security. Components with excessive play or wear should be repaired or replaced.

(f) Inspect the nose gear door closer wear sleeve. It must be in serviceable condition and have a minimum thickness of 0.090 inches (2.28 millimeters). Replace the plate, as necessary.

(g) Inspect the nose gear door actuator arm stop bolts for condition and security. Replace the bolts, as necessary.

(h) Inspect the piano hinges for condition and security. Replace worn parts.

(i) Ensure the landing gear is fully extended and locked then remove the tail stand and lower the airplane.

Figure 32-20.5: Nose Gear Doors

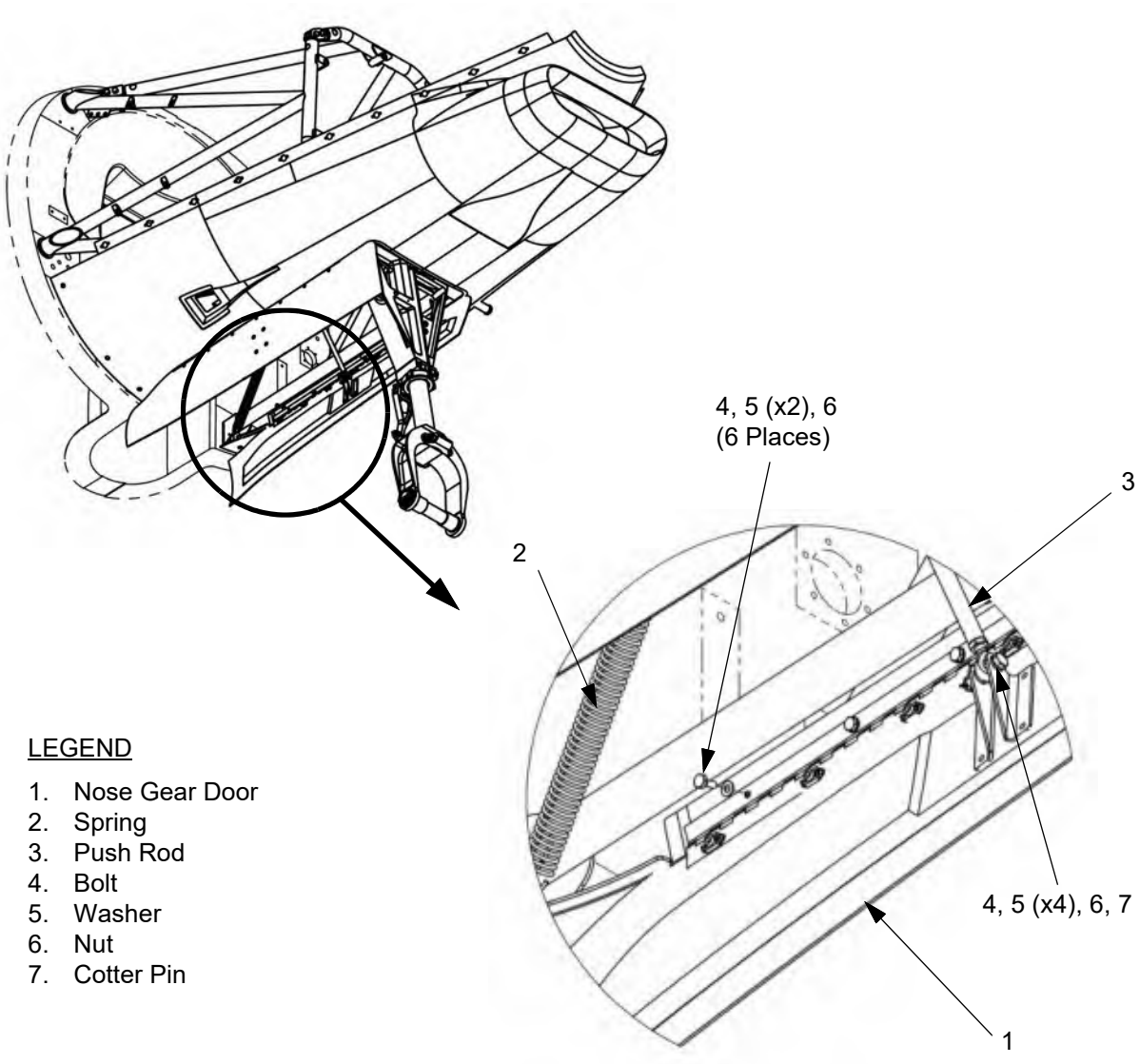

LEGEND

1. Nose Gear Door
2. Spring
3. Push Rod
4. Bolt
5. Washer
6. Nut
7. Cotter Pin

F. Blast Shield

(1) Removal

(a) Disconnect the nose gear door springs from the gear doors actuation torque tube.

(b) Disconnect the nose gear door control rods from the gear doors actuation torque tube.

(c) Remove the eight screws, washers, and nuts attaching the torque tube bearing arms to the torque tube supports.

(d) Remove the torque tube.

(e) Remove the nut and washer attaching each torque tube bearing arm to the torque tube.

(f) Remove the four bolts and washers attaching the blast shield to the torque tube support arms.

(g) Remove the two bolts and washers attaching the blast shield to the hydraulic suppressor mounting plate.

(h) Remove the blast shield.

(2) Installation

(a) Put the blast shield against the torque tube supports then attach it using four bolts and washers.

(b) Attach the blast shield to the hydraulic suppressor mounting plate using two bolts and washers.

(c) Slide the torque tube bearing arms onto the ends of the torque tube then attach them using washers and nuts

(d) Attach the torque tube bearing arms to the torque tube supports using eight screws, washers, and nuts.

(e) Connect the nose gear door control rods to the gear doors actuation torque tube.

(f) Connect the nose gear door springs to the gear doors actuation torque tube.

Figure 32-20.6: Blast Shield

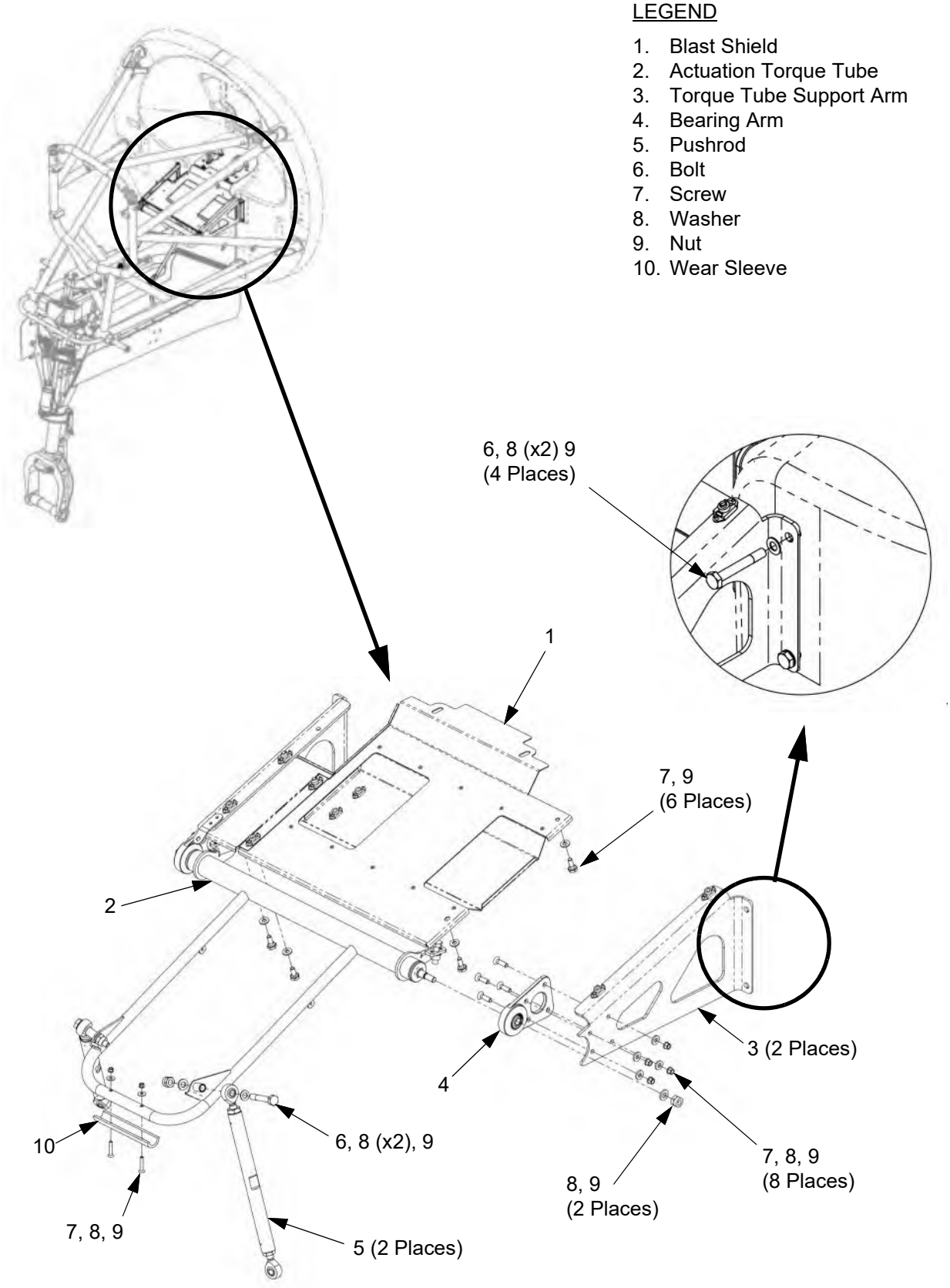

G. Uplock Assembly

(1) Removal

(a) Remove the cotter pins, nuts, washers and bolts that attach the uplock assembly to the nose landing gear housing.

(b) Remove the uplock assembly and any shims (if installed).

(2) Installation

(a) Put the uplock assembly and shims (if needed) in position on the nose landing gear housing.

Note: A maximum of 2 shims may be installed between the uplock assembly and nose landing gear housing to achieve correct locking function.

(b) Install the bolts, washers, nuts, and cotter pins that attach the uplock assembly to the nose landing gear housing.

(c) Do the Operational Test of the landing gear (refer to Chapter 32-30).

Figure 32-20.7: Uplock Assembly

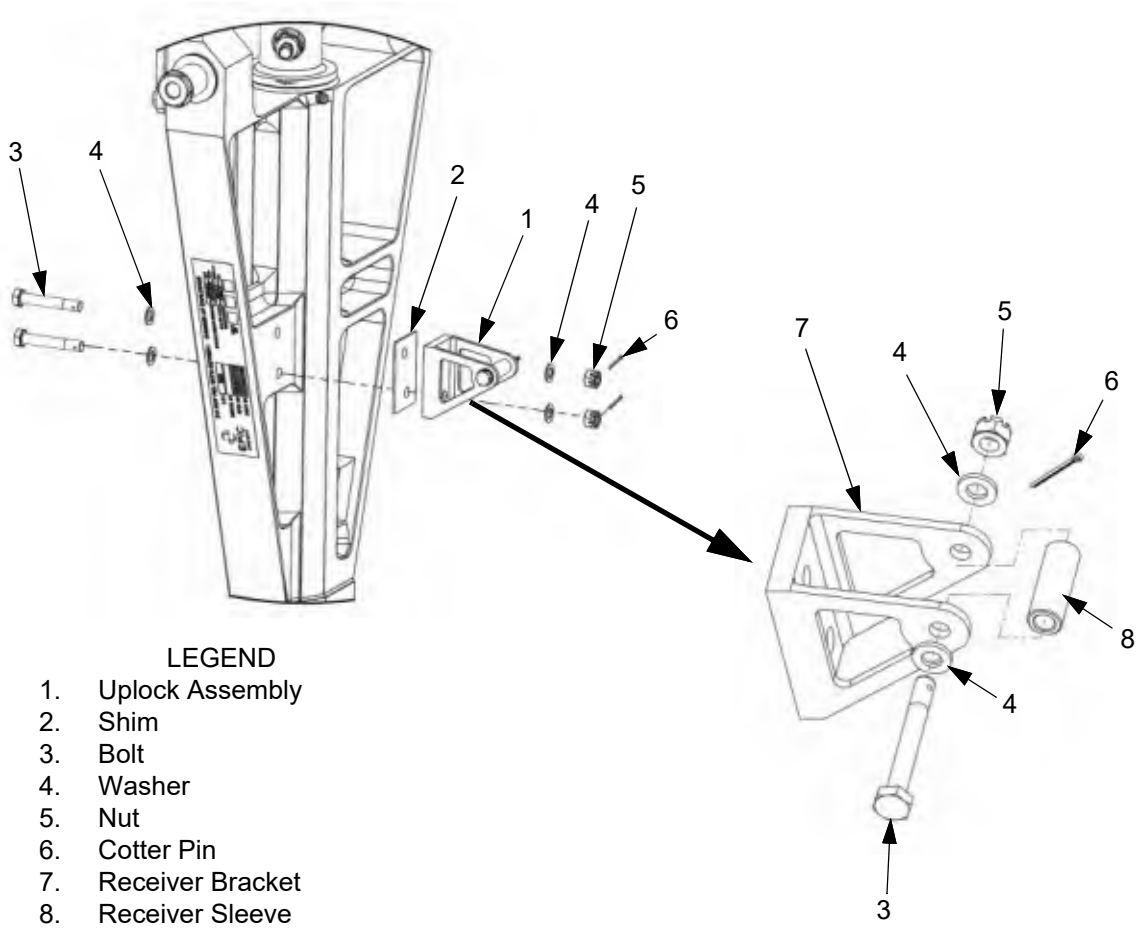

LEGEND

1. Uplock Assembly
2. Shim
3. Bolt
4. Washer
5. Nut
6. Cotter Pin
7. Receiver Bracket
8. Receiver Sleeve

H. Tow Bar Pin

(1) Removal

(a) Remove one of the two retaining rings from the tow bar pin.

(b) Remove the tow bar pin from the tow bar hitch.

(c) Remove the two screws that attach the tow bar hitch to the fork.

(d) Remove the tow bar hitch.

(2) Installation

(a) Installation is the reverse of removal.

(3) Inspection

(a) Inspect the tow bar pin for condition, leakage, and security.

(b) Inspect the attachment hardware for condition and security.

Figure 32-20.8: Tow Bar Pin

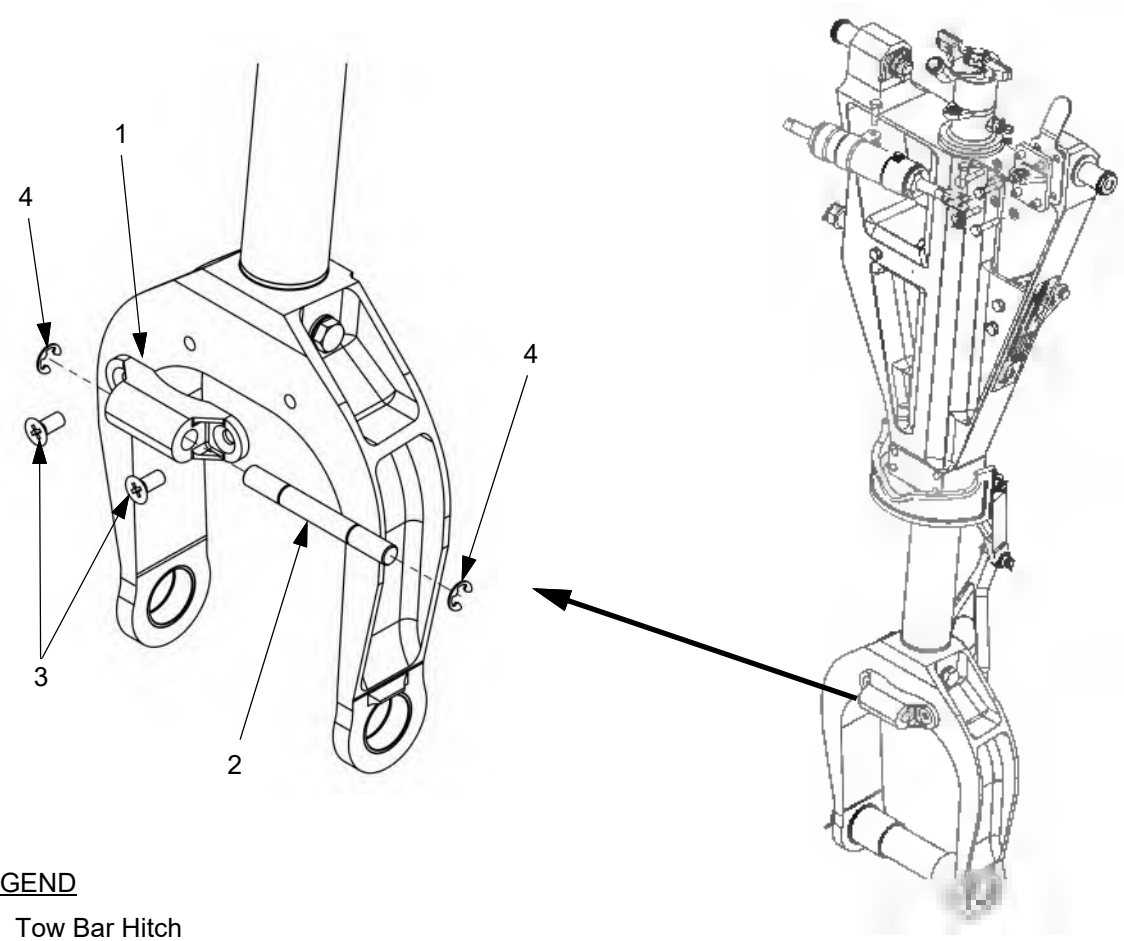

LEGEND

1. Tow Bar Hitch
2. Tow bar Pin
3. Screw
4. Retaining Ring

EXTENSION AND RETRACTION

1. Description

The airplane landing gear is extended and retracted by hydraulic actuators that are part of a hydraulic system pressurized by an engine driven pump. Bleed air from the engine provides head pressure to the hydraulic reservoir to ensure supply of fluid to the pump.

A service panel in the fuselage gives access to hydraulic system quick connect ports. These ports permit connection of a hydraulic service cart to the system.

2. Maintenance Practices

A. Nose and Main Gear Actuators

(1) Removal

(a) Jack the airplane, refer to Chapter 7-10.

Note: Make sure there is enough clearance to swing the landing gear.

(b) Set the BATT 1 and BATT 2 switches to off.

(c) Pull and collar the GEAR CTRL circuit breaker.

(d) Make sure the hydraulic system is depressurized, refer to Chapter 29-10.

(e) For main landing gear actuators, remove the belly panel, gear well liner, and gear well wing tunnel. Refer to Chapter 57-10.

(f) Disconnect the electrical connector from the actuator.

Note: Use a suitable container or towels to collect any hydraulic fluid that might drain from the lines.

(g) Disconnect the uplock, retract, extend, and emergency extend lines from the actuator. Mark the hoses for re-installation.

(h) Cap and plug all open lines and fittings.

(i) Remove the cotter pins, nuts, and washers that attach the actuator to the landing gear pin and wing fitting.

(j) For main landing gear actuators, remove the lower main landing gear door, refer to Chapter 32-10.

(k) While supporting the actuator, remove the bolt and washer that attach the actuator to the wing fitting. Remove the actuator rod-end from the landing gear pin and remove the actuator from the airplane.

(2) Installation

(a) Put the actuator in position on the landing gear pin and wing fitting.

(b) Install the bolt, washers and nut at the wing fitting.

(c) Torque the nut to a minimum of 55 ft-lbs, then advance to the next castellation and install a new cotter pin. Do not exceed 95 ft-lbs.

(d) For main landing gear actuators, install the lower main landing gear door, refer to Chapter 32-10.

(e) Install the washer and nut at the landing gear pin.

(f) Torque the nut to a minimum of 55 ft-lbs, then advance to the next castellation and install a new cotter pin. Do not exceed 95 ft-lbs.

(g) Connect the uplock, retract, extend, and emergency extend lines to the actuator.

(h) Connect the electrical connector to the actuator.

(i) Reset the GEAR CTRL circuit breaker.

(j) Do the landing gear operational check, refer to Chapter 32-30.

(k) Check the actuators and associated lines and fittings for leaks.

(l) For main landing gear actuators, install the belly panel, gear well liner, and gear well wing tunnel, refer to Chapter 57-10.

(3) Disassembly

(a) Remove the actuator from the airplane.

(b) Note the orientation of hydraulic fittings and clocking of the actuator body for re installation.

(c) Cut the safety wire on the rod end jam nut then unscrew the rod end from the piston rod.

Note: Note the length installed length of the rod end before removal.

(d) Cut the safety wire and loosen the safety nut on the actuator body.

(e) Unscrew the actuator end cap from the end of the actuator piston.

(f) Carefully Slide the actuator piston assembly out of the actuator cylinder far enough to remove the six actuator locks and piston seals.

Note: The six actuator locks will be forcefully ejected from their seats due to the action of the spring in the lock piston.

Note: Be careful not to push the actuator piston so far as to push the microswitch wires into the actuator sealing insertion.

(g) Remove set screw securing actuator sealing insertion to actuator cylinder weldment. Remove actuator sealing insertion and remove the actuator piston assembly from the sealing insertion end of the actuator cylinder weldment.

(h) Loosen the setscrew then carefully unscrew the actuator stop from the end of the piston. This will be difficult and requires the application of axial pressure to the actuator stop while unscrewing it.

WARNING: The spring exerts approximately 200 lbs. of force.

(i) Remove the spring, o-rings, and backup ring from the piston.

(j) Remove the set screw locking the piston to the piston rod. This set screw is staked and may have to be drilled out.

(k) Relieve the strain relief where the wires exit the piston shaft then unscrew the piston from the piston rod.

(l) Unscrew the microswitch from the piston.

(4) Reassembly

(a) Replace all seals, o-rings and back-up rings.

(b) Install the microswitch into the bottom of the actuator piston.

(c) Connect the electrical harness to the microswitch.

(d) Screw the piston onto the end of the piston rod then install a set screw. Stake the edge of the hole to fix the set screw.

(e) Install new O-rings onto the locking piston, as necessary, then slide it into the end of the piston.

(f) Put the piston and rod assembly into the actuator cylinder.

(g) Slide the end of the piston and rod assembly out the end of the actuator cylinder so the actuator locks can be put in their seats then slide the assembly into the cylinder to capture the locks.

(h) Put the spring into the locking piston.

(i) Install new O-rings onto the actuator stop, as necessary.

(j) Carefully screw the actuator stop onto the end of the piston. This will be difficult and makes it necessary to apply axial pressure to the actuator stop while turning it.

WARNING: The spring exerts approximately 200 lbs. of force.

(k) Install the actuator end cap onto the actuator cylinder. Ensure the clocking of the actuator body is correct as noted during disassembly.

Note: The actuator body for the left and right main gear actuators are clocked so that the extension and retraction fittings are up and aligned ± 10°.

The actuator body of the nose gear is clocked so that the extension fitting is down and the retraction fitting is approximately in-line to 30° inboard.

(l) Install the safety nut then torque it 5 to 10 ft-lbs. Install safety wire.

(m) Install the rod end onto the actuator.

(n) Install the actuator onto the airplane. Adjust the length of the rod end as necessary then install safety wire after the jam nut has been tightened.

Figure 32-30.1: Actuator Attachment (Sheet 1 of 2)

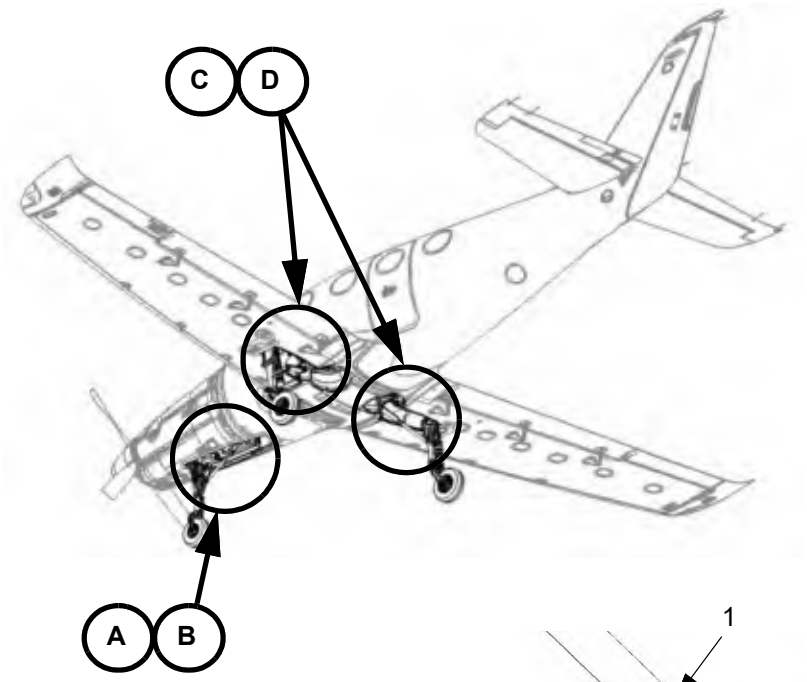

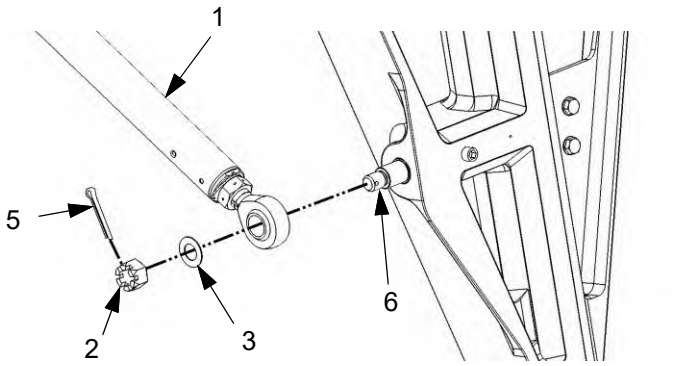

A



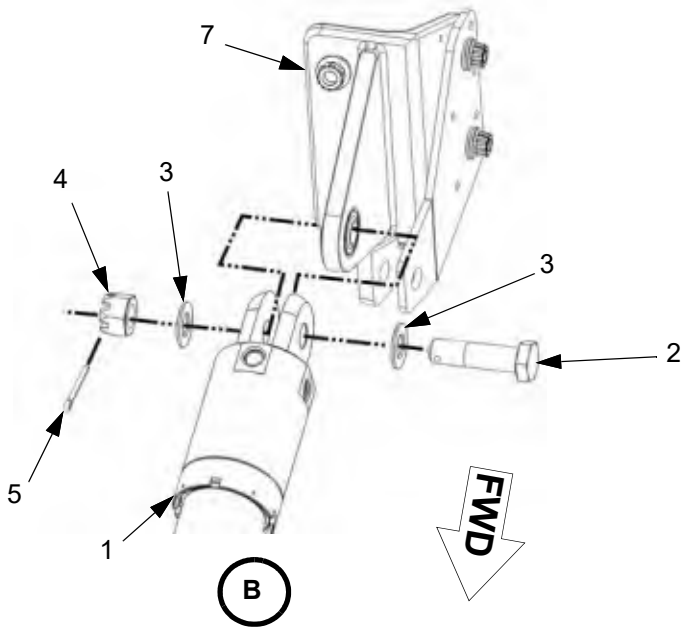

LEGEND

1. Actuator
2. Bolt
3. Washer
4. Nut
5. Cotter Pin
6. Pin
7. Bracket

Figure 32-30.1: Actuator Attachment (Sheet 2 of 2)

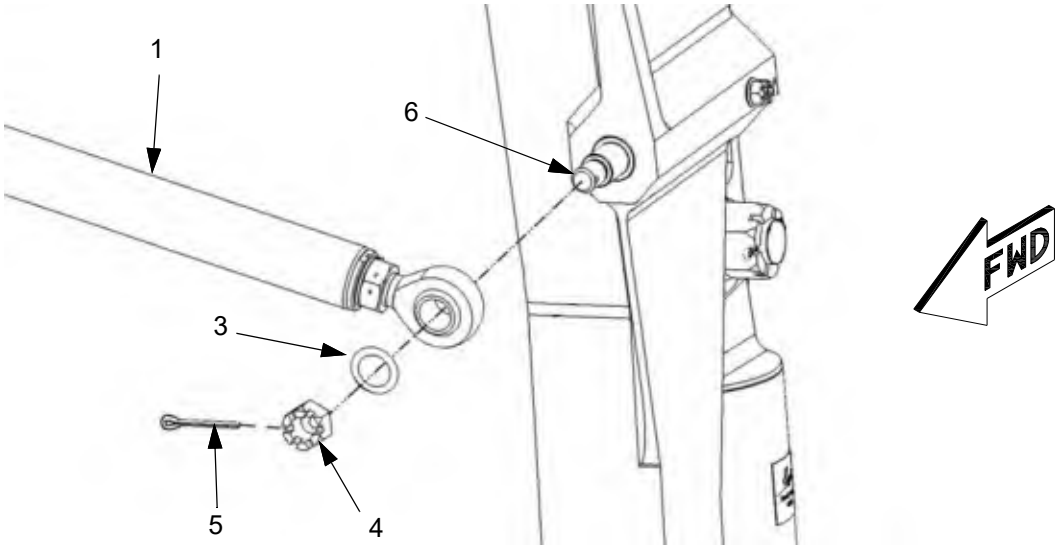

C

Left side shown, right side opposite.

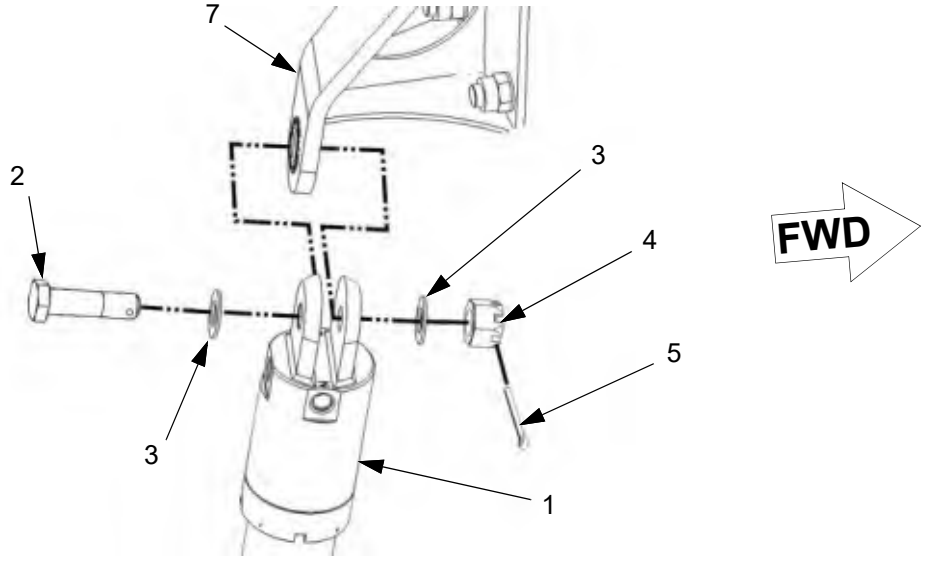

D

Left side shown, right side opposite.

LEGEND

1. Actuator
2. Bolt
3. Washer
4. Nut
5. Cotter Pin
6. Pin
7. Bracket

Figure 32-30.2: Actuator (Sheet 1 of 2)

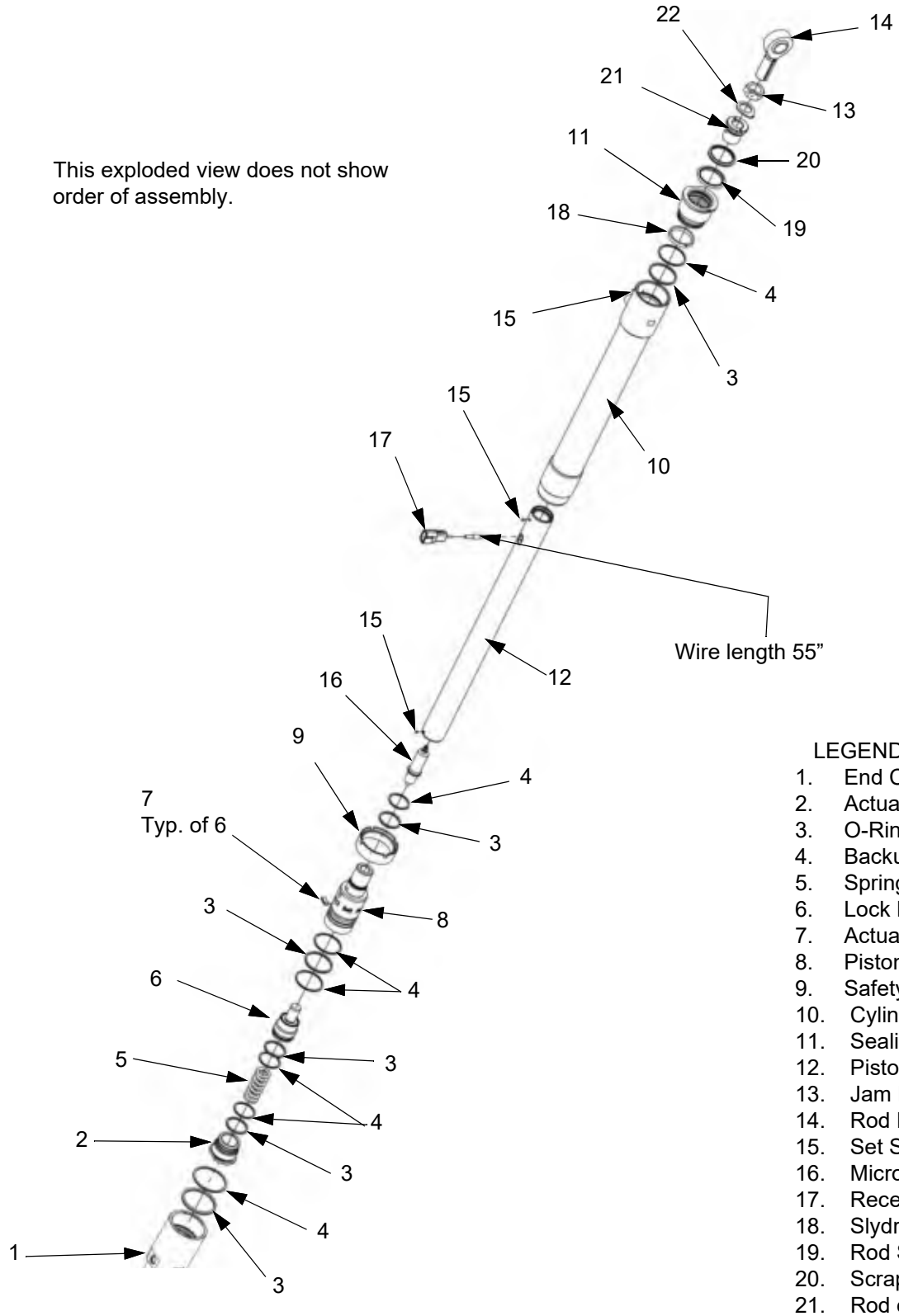

LEGEND

1. End Cap
2. Actuator Stop
3. O-Ring
4. Backup Ring
5. Spring
6. Lock Piston
7. Actuator Lock
8. Piston
9. Safety Nut
10. Cylinder
11. Sealing Insertion
12. Piston Rod
13. Jam Nut
14. Rod End
15. Set Screw
16. Microswitch
17. Receptacle
18. Slydring
19. Rod Seal
20. Scraper
21. Rod end Reduction
22. Locking Washer

Figure 32-30.2: Actuator (Sheet 2 of 2)

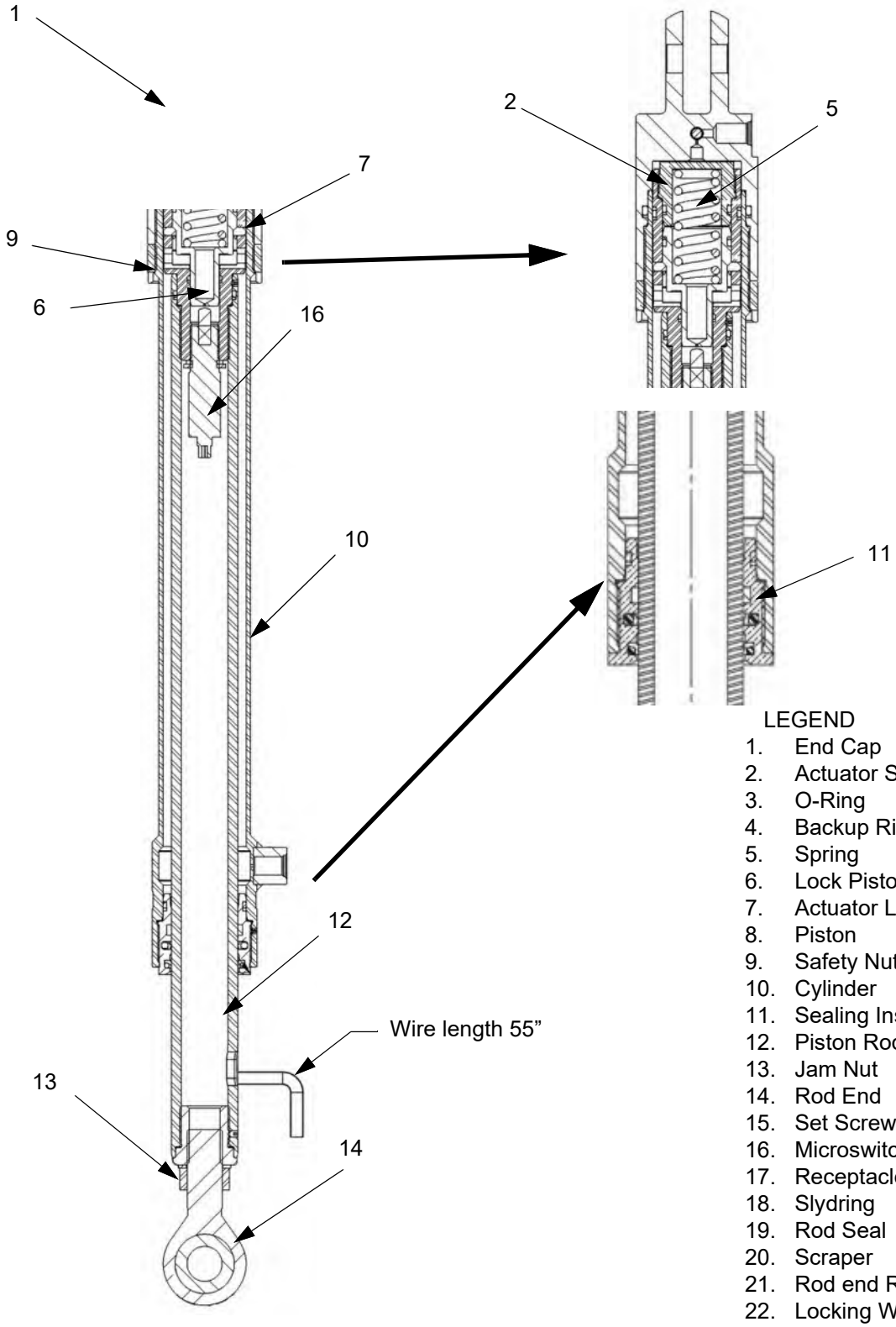

LEGEND

1. End Cap
2. Actuator Stop
3. O-Ring
4. Backup Ring
5. Spring
6. Lock Piston
7. Actuator Lock
8. Piston
9. Safety Nut
10. Cylinder
11. Sealing Insertion
12. Piston Rod
13. Jam Nut
14. Rod End
15. Set Screw
16. Microswitch
17. Receptacle
18. Slydring
19. Rod Seal
20. Scraper
21. Rod end Reduction
22. Locking Washer

B. Main Gear Uplock Actuator

(1) Removal

(a) Jack the airplane, refer to Chapter 7-10.

Note: Make sure there is enough clearance to swing the landing gear.

(b) Set the BATT 1 and BATT 2 switches to off.

(c) Pull and collar the GEAR CTRL circuit breaker.

WARNING: The hydraulic lines can contain high pressures after engine shutdown. The sudden release of hydraulic fluid under pressure could cause serious injury or death. The system must be depressurized before it is opened for maintenance.

(d) Depressurize the hydraulic system, refer to 29-10.

(e) Disconnect the ADVANCE and RETRACT lines from the uplock actuator and label them for installation.

(f) Cap and plug all open lines and fittings.

(g) Note the position of the actuator in the bracket for installation.

(h) Remove the safety wire from the actuator jam nuts and remove the outboard jam nut.

(i) Remove the uplock actuator by rotating it outboard.

(j) Remove the inboard jam nut.

(2) Installation

(a) Apply MIL-PRF-83483 anti-seize to the jam nut threads.

(b) With the inboard jam nut in position, thread the actuator inboard into the jam nut to the position noted in the removal procedure.

(c) Install and snug the outboard jam nut.

(d) Connect the ADVANCE and RETRACT lines to the uplock actuator. Make sure the lines are connected to the correct ports.

(e) Do the Main Landing Gear Uplock Actuator Adjustment, refer to step (5).

(3) Hook Removal

(a) Disconnect the springs from the hook.

(b) Remove the cotter pin, nut, washers, and bolt that attach the hook to the uplock assembly.

(c) Remove the uplock hook.

(4) Hook Installation

(a) Apply Aeroshell 64 to the outer diameter of the uplock hook bushing.

(b) Put the hook in position and install the bolt, washers, nut and cotter pin that attach the hook to the uplock assembly.

(c) Connect the springs to the hook.

(5) Adjustment

(a) Jack the airplane, refer to Chapter 7-10.

Note: Make sure there is enough clearance to swing the landing gear.

(b) Remove the main landing gear doors, refer to Chapter 32-10.

Note: Mark the position of the landing gear doors for re-installation.

(c) Connect a ground power unit to the airplane, refer to Chapter 24-40.

(d) Connect the hydraulic service cart to the airplane.

(e) Close the GEAR CTRL circuit breaker.

(f) Set the BATT 1 and BATT 2 switches to ON.

(g) Turn on the hydraulic service cart.

(h) Retract the landing gear.

(i) Measure the gap between the uplock actuator and the uplock hook. If the gap is 0.0625" or less, proceed to step (aa). If the gap is greater than 0.0625", proceed to the next step.

WARNING: Make sure to perform steps (j) and (k) before opening the system. The system must be fully depressurized before it is opened for maintenance.

(j) Turn off the hydraulic service cart.

WARNING: Stay clear of the landing gear until all hydraulic pressure has been bleed off. If there is not adequate system pressure remaining to move the main landing gear off the uplock hooks, use the hydraulic cart to move the landing gear to the down and locked position to begin the pressure bleeding procedure.

(k) Put the landing gear handle in the DOWN position.

Note: The landing gear may not fully extend to the down and locked position. Selecting DOWN or UP with hydraulic power off will move the main landing gear and begin bleeding off the pressure in the hydraulic system but may not extend the gear fully up or down.

(l) Continue to cycle the landing gear handle DOWN and UP to bleed off all remaining hydraulic pressure.

(m) Set the BATT 1 and BATT 2 switches to off.

WARNING: The hydraulic system can contain high pressures after engine shutdown. The sudden release of hydraulic fluid under pressure could cause serious injury or death. The system must be fully depressurized before it is opened for maintenance.

(n) Disconnect the ADVANCE and RETRACT lines from the uplock actuator and label them for installation.

(o) Manually press the uplock actuator piston in to make sure it is fully retracted.

(p) Cap and plug the open lines and fittings.

CAUTION: The uplock actuator body must be adjusted in 360° increments to keep the hydraulic connections in the correct positions.

Note: Re-clocking or removing the elbow fittings may be necessary to rotate the actuator.

(q) Adjust the uplock actuator so the piston is 0.0625" or less from the uplock hook by loosening the outboard jam nut and rotating the body of the uplock actuator in 360° increments.

(r) Manually raise the landing gear onto the uplock hook and remeasure. Make sure the actuator piston is fully retracted when measuring the gap.

(s) Snug the actuator jam nuts.

(t) Manually retract the uplock hook and put the landing gear in the down and locked position.

(u) Re-clock/install the elbow fittings if necessary.

CAUTION: Make sure the hydraulic lines are connected to the correct connections on the uplock actuator. Reversing the connections could cause damage to the aircraft.

(v) Connect the ADVANCE and RETRACT lines to the uplock actuator.

(w) Set the BATT 1 and BATT 2 switches to ON.

(x) Turn on the hydraulic service cart.

(y) Retract the landing gear.

(z) Re-measure the gap between the uplock actuator and the uplock hook to verify the adjustment. If the gap is 0.0625" or less, proceed to the next step. If the gap is greater than 0.0625", repeat the adjustment procedure beginning at step (9).

(aa) Extend the landing gear.

(ab) Turn off the hydraulic service cart.

(ac) Torque the uplock actuator jam nuts to 20 ± 5 ft-lbs using an AMF 52761 spanner wrench, then install safety wire.

(ad) Do the operational check of the landing gear, refer to step 32-30.2.F.

(ae) With the landing gear retracted, pull the GEAR CTRL circuit breaker. Make sure the landing gear stay on the uplock hooks in the retracted position.

(i) If the main landing gear doesn't stay on the uplock hook, check the up-stop adjustment, refer to step 32-30.2.D.

(af) Extend the landing gear. Make sure all three green down and locked indicators are illuminated in the annunciation panels.

(ag) Install the main landing gear doors, refer to Chapter 32-10.2.D.

(ah) Check the adjustment of the main landing gear doors, refer to Chapter 32-10.2D.

(ai) Set the BATT 1 and BATT 2 switches to off.

(aj) Disconnect the ground power unit from the airplane, refer to Chapter 24-40.

(ak) Disconnect the hydraulic service cart.

(al) Lower the airplane and remove the aircraft jacks, refer to Chapter 7-10.

C. Nose Gear Uplock Actuator

(1) Removal

(a) Jack the airplane, refer to Chapter 7-10.

Note: Make sure there is enough clearance to swing the landing gear.

(b) Set the BATT 1 and BATT 2 switches to off.

(c) Pull and collar the GEAR CTRL circuit breaker.

WARNING: The hydraulic lines can contain high pressures after engine shutdown. The sudden release of hydraulic fluid under pressure could cause serious injury or death. The system must be depressurized before it is opened for maintenance.

(d) Depressurize the hydraulic system (refer to 29-10).

(e) Disconnect the ADVANCE and RETRACT lines from the uplock actuator and label them for installation.

(f) Cap all open lines and fittings.

(g) Note the position of the actuator in the bracket for installation.

(h) Remove the aft jam nut and remove the uplock actuator from the bracket.

(i) Remove the forward jam nut from the actuator.

(2) Installation

(a) Apply MIL-PRF-83483 anti-seize to the jam nut threads.

(b) Thread the forward jam nut on the actuator to the position noted in the removal procedure.

(c) Put the actuator in position on the bracket.

(d) Install and snug the aft jam nut.

(e) Connect the ADVANCE and RETRACT lines to the uplock actuator. Make sure the lines are connected to the correct ports.

(f) Do the Nose Gear Uplock Actuator Adjustment procedure, refer to step (5).

(3) Uplock Hook/Up -Stop Removal

(a) Disconnect the springs from the hook.

(b) Remove the cotter pin, nut, washers, and bolt that attach the hook to the engine mount.

(c) Remove the up-stop assembly (SN: K050 and on, and K003-K049 with SB-0054 only).

(d) Remove the uplock hook.

(4) Uplock Hook/Up-Stop Installation

(a) Apply Aeroshell 64 to the outer diameter of the uplock hook bushing.

(b) Put the hook and up-stop in position (Up-stop SN: K050 and on, and K003-K049 with SB-0054 only).

(c) Install the bolt, washers, nut and cotter pin that attach the hook and up stop to the engine mount.

(d) Connect the springs to the hook.

(5) Adjustment

(a) Jack the airplane, refer to Chapter 7-10.

Note: Ensure there is sufficient clearance from the ground to retract and extend the landing gear

(b) Level the aircraft (refer to Chapter 8-20)

(c) Make sure nose landing gear is raked forward 9° ± 2° from vertical as measured on the flat aft or forward face of the strut.

(d) Remove the nose landing gear doors, refer to Chapter 32-20.

Note: Mark the position of the landing gear doors for re-installation.

(e) Connect a ground power unit to the airplane, refer to Chapter 24-40.

(f) Connect the hydraulic service cart to the airplane.

(g) Close the GEAR CTRL circuit breaker.

(h) Set the BATT 1 and BATT 2 switches to ON.

(i) Turn on the hydraulic service cart.

(j) Retract the landing gear.

(k) Make sure the uplock actuator is just contacting the nose of the uplock hook.

Note: If electrical power is removed or the GEAR CTRL circuit breaker is pulled the actuator may sag slightly creating a gap between the uplock actuator and uplock hook.

(l) If no adjustment is required proceed to step (r). If there is a gap or the actuator is deflecting the hook, proceed to the next step.

(m) Extend the landing gear.

(n) Turn off the hydraulic service cart, but keep aircraft power on.

(o) Loosen the jam nuts and adjust the uplock actuator so the piston will just contact the uplock hook. Make sure the piston is fully retracted when making the adjustment.

(p) Turn the hydraulic service cart on and retract the landing gear.

(q) Check the adjustment and repeat steps (m) - (p) as needed to achieve the correct adjustment.

(r) Torque the uplock actuator jam nuts to 20 ± 5 ft-lbs using an AMF 52761 spanner wrench, then install safety wire.

(s) Do the operational check of the landing gear (refer to Chapter 32-30).

(t) With the landing gear retracted, pull the GEAR CTRL circuit breaker.

WARNING: Do not position yourself directly below the landing gear. If the landing gear comes off the uplock hook, serious injury may occur.

(u) Manually pull down on the nose landing gear and make sure the landing gear stay in the retracted position on the uplock hook.

(v) Reset the GEAR CTRL circuit breaker and lower the landing gear.

(w) Install the nose landing gear doors, refer to Chapter 32-20.

(x) Check the adjustment of the nose landing gear doors, refer to Chapter 32-20.

(y) Make sure the three green (NOSE, LEFT, and RIGHT) down and locked indications are present on both annunciation panels.

(z) Set the BATT 1 and BATT 2 switches to off.

(aa) Disconnect the ground power unit from the airplane, refer to Chapter 24-40.

(ab) Disconnect the hydraulic service cart.

(ac) Lower the airplane and remove the aircraft jacks, refer to Chapter 7-10.

Figure 32-30.3: Landing Gear Uplocks (Sheet 1 of 3)

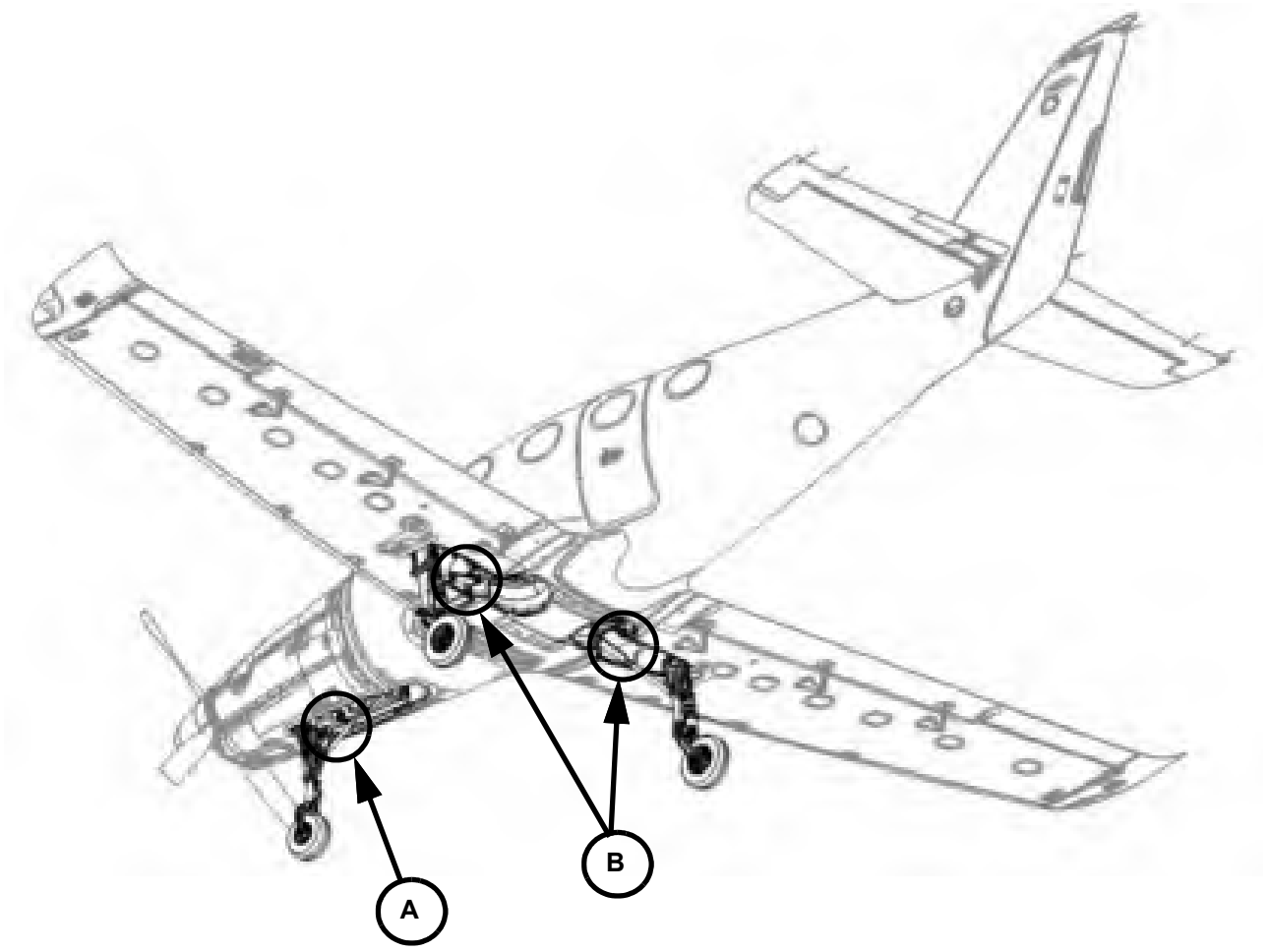

Figure 32-30.3: Landing Gear Uplocks (Sheet 2 of 3)

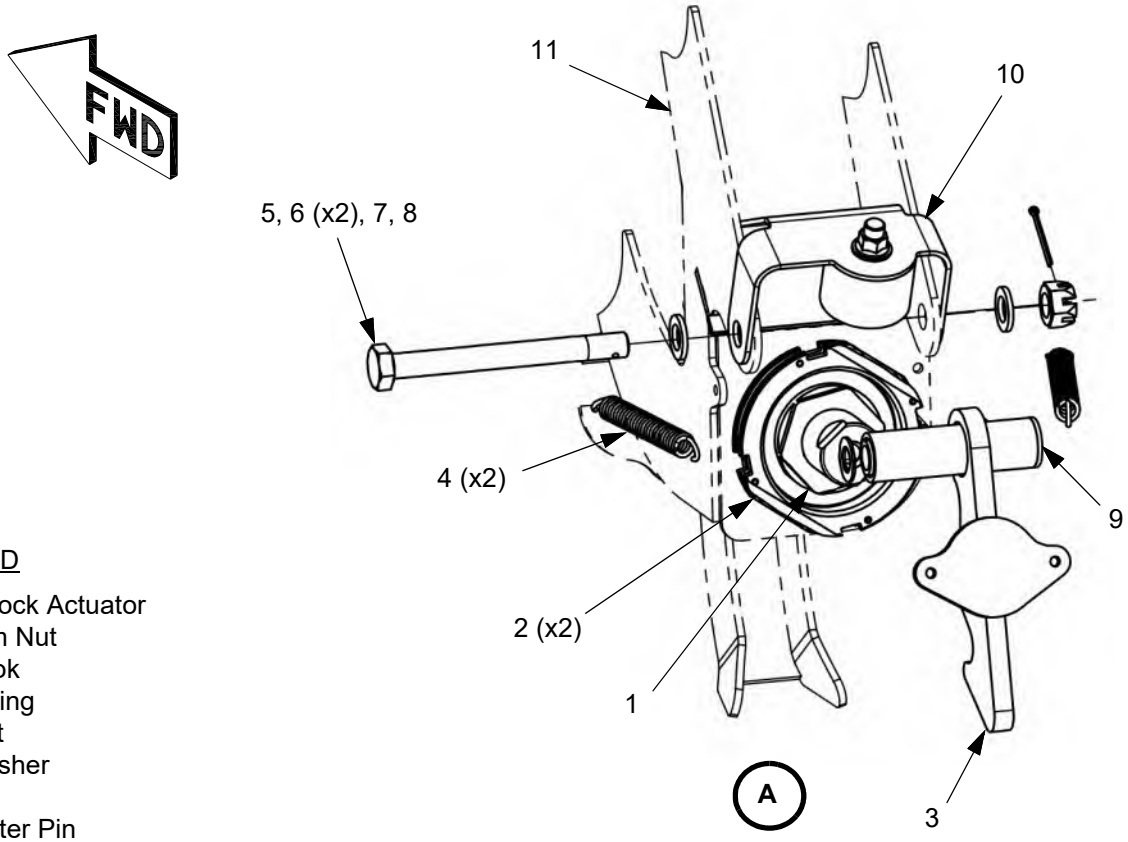

LEGEND

1. Uplock Actuator
2. Jam Nut
3. Hook
4. Spring
5. Bolt
6. Washer
7. Nut
8. Cotter Pin
9. Bushing
10. Up-Stop (SN: K050 and on, and K003-K049 with SB-0054)
11. Engine Mount

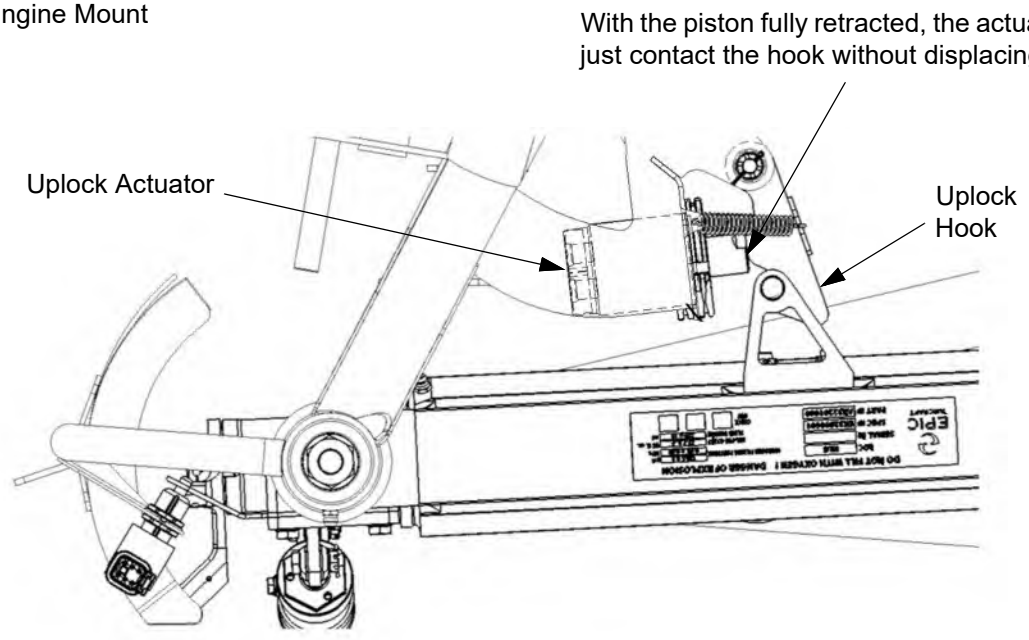

Figure 32-30.3: Landing Gear Uplocks (Sheet 3 of 3)

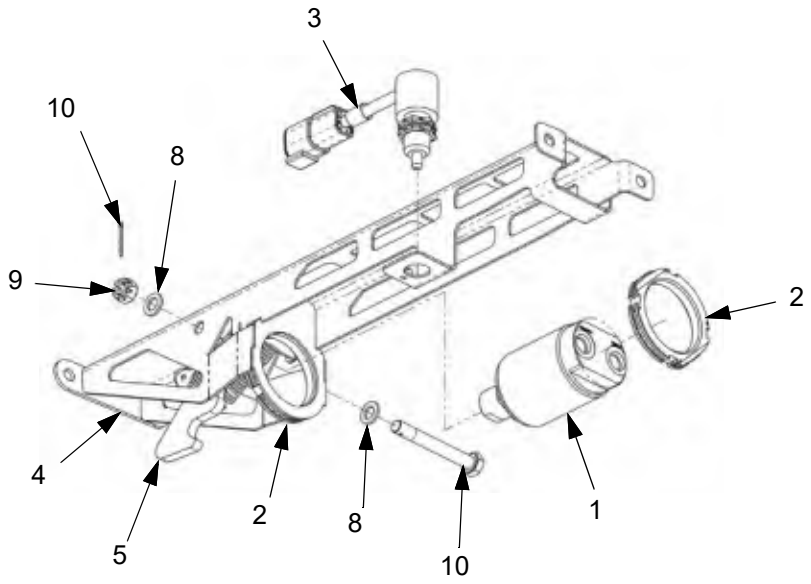



B

Right side shown, left side opposite.

LEGEND

1. Uplock Actuator
2. Actuator Locknut
3. Gear Up Limit Switch
4. Bracket
5. Hook
6. Spring
7. Bolt
8. Washer
9. Nut
10. Cotter Pin

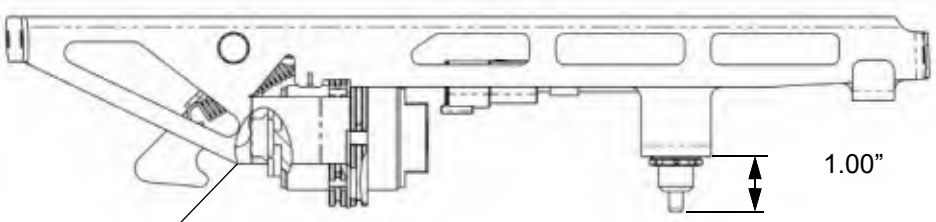

Hook Lock Position
Cylinder Retracted

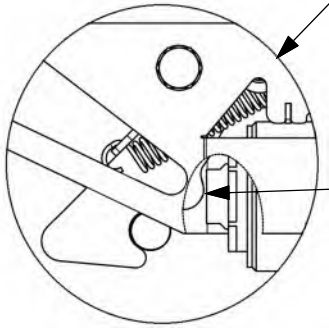

The gap between the uplock hook and uplock actuator should be 0.0625” or less with the actuator retracted.

D. Main Gear Upstop

(1) Removal

(a) Jack the airplane, refer to Chapter 7-10.

Note: Make sure there is enough clearance to swing the landing gear.

(b) Set the BATT 1 and BATT 2 switches to off.

(c) Pull and collar the GEAR CTRL circuit breaker.

(d) Remove the bolts, washers, and locknuts attaching the upstop to the wing rib.

(e) Remove the upstop assembly from the airplane.

(2) Installation

(a) Put the upstop assembly against the wing rib.

(b) Attach the upstop to the rib using bolts, washers, and locknuts. Torque the nuts.

(c) Do the Upstop Adjustment procedure.

(3) Upstop Adjustment

(a) Make sure the camber is correct, refer to Chapter 32-10.2.A.

(b) Make sure the uplock actuator is adjusted correctly, refer to step 32-30.2.B(5).

(c) Remove the main landing gear doors, refer to Chapter 32-10.2.D.

Note: Mark the position of the landing gear doors for installation.

(d) Connect a ground power unit to the airplane, refer to Chapter 24-40.

(e) Connect the hydraulic service cart to the airplane.

(f) Close the GEAR CTRL circuit breaker.

(g) Set the BATT 1 and BATT 2 switches to ON.

(h) Turn on the hydraulic service cart.

(i) Retract the landing gear.

(j) Turn off the hydraulic service cart.

(k) With the landing gear retracted, pull and collar the GEAR CTRL circuit breaker.

Note: This will allow the landing gear to hang on the up-lock hooks.

(l) Adjust the up-stop bumpers to just make contact with the lower damper bolt head then back the bumper off 1/2 turn and snug the upper jam nut.

(m) Check the adjustment as follows:

(i) Reset the GEAR CTRL circuit breaker.

(ii) Turn on the hydraulic service cart.

(iii) Extend and retract the landing gear.

(iv) Make sure the uplock roller engages the uplock hook without excessive effort.

(v) Check the adjustment as follows:

(1) Pull and collar the GEAR CTRL circuit breaker.

(2) Make sure the landing gear stay on the up-lock hooks in the retracted position.

(3) If the main landing gear doesn't stay on the up-lock hook, turn off the hydraulic service cart and adjust the bumper up incrementally.

(n) Extend the landing gear.

(o) Torque and safety wire the jam nuts.

(p) Install the main landing gear doors, refer to Chapter 32-10.2.D.

(q) Check the adjustment of the main landing gear doors, refer to Chapter 32-10.2.D(3).

(r) Make sure all three green down and locked indicators are illuminated on the annunciation panels.

(s) Set the BATT 1 and BATT 2 switches to off.

(t) Disconnect the hydraulic service cart from the airplane.

(u) Disconnect the ground power unit from the airplane, refer to Chapter 24-40.

(v) Lower the airplane and remove the jacks, refer to Chapter 7-10.

Figure 32-30.4: Upstop

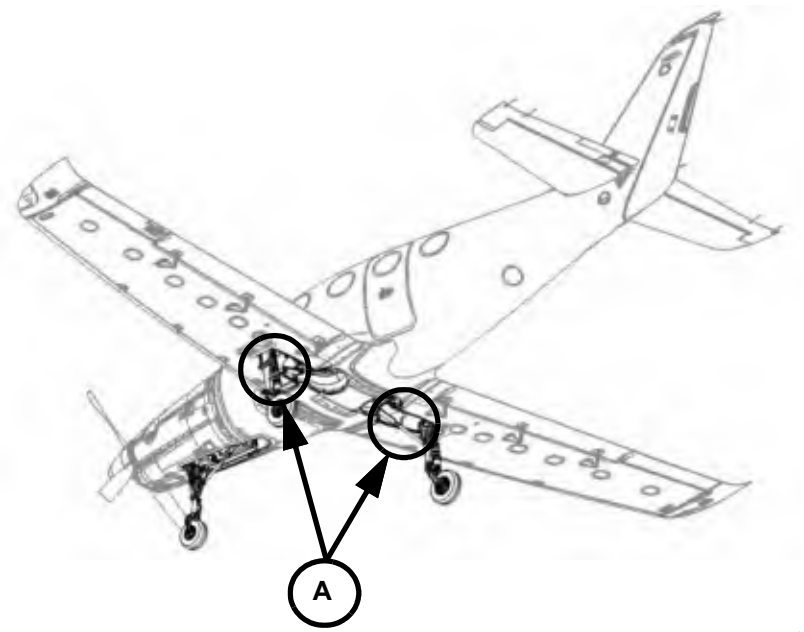

LEGEND

1. Bolt
2. Washer
3. Nut
4. Bracket
5. Rubber Bumper
6. Screw
7. Washer
8. Nut
9. Fender Washer

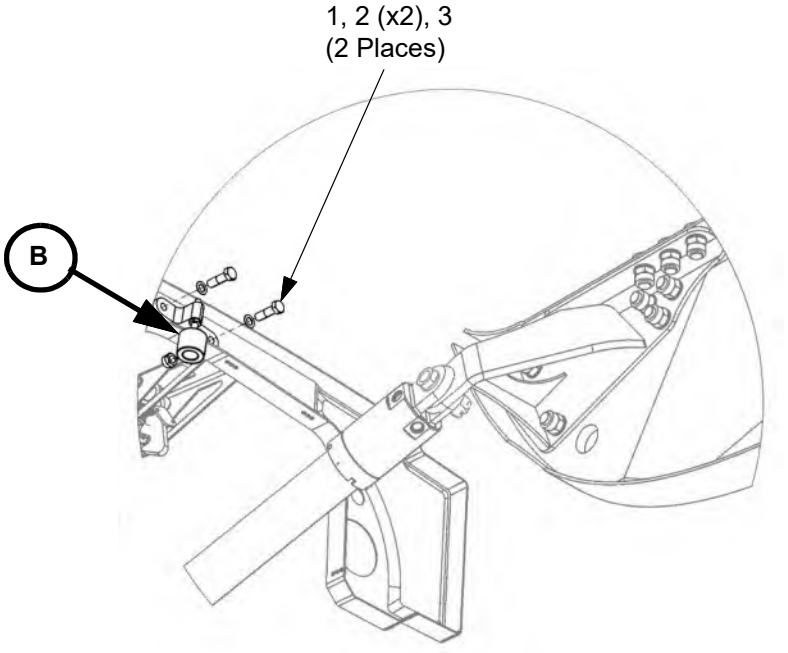

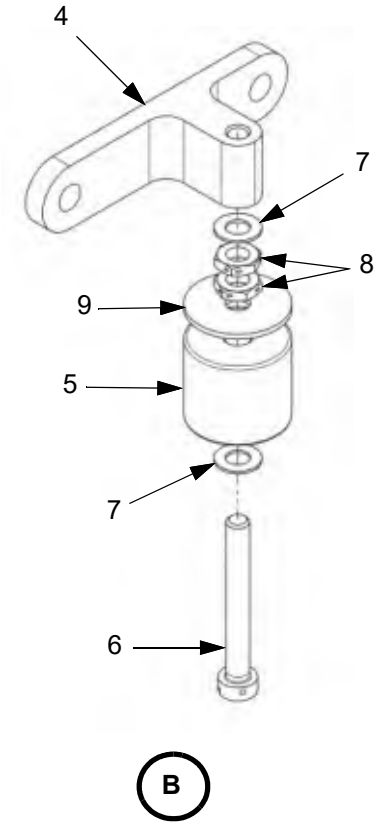

Left upstop shown, right upstop is opposite.

A

E. Landing Gear Control Switch

(1) Removal

(a) Set the BATT 1 and BATT 2 switches to off then pull the GEAR CTRL circuit breaker.

(b) Disconnect external electrical power from the airplane, refer to Chapter 24-40.

(c) Remove the two set screws attaching the knob to the landing gear switch then remove the knob.

(d) Remove the interior finish panel in front of the landing gear switch mounting bracket.

(e) Remove the three socket head screws and washers attaching the landing gear switch light panel to the bracket.

(f) Remove the bezel nut and washer attaching the landing gear switch to the front of the mounting bracket in the instrument panel.

(g) Carefully pull the landing gear switch away from the mounting bracket then disconnect the wiring harness.

(h) Remove the landing gear switch.

(i) Remove the bezel nut and keyed washer as necessary.

(2) Installation

(a) Install a keyed washer and bezel nut onto the landing gear switch as necessary.

(b) Connect the wiring harness to the landing gear switch.

(c) Put the landing gear switch through the back of the mounting bracket in the instrument panel.

(d) Attach the landing gear switch to the mounting bracket using a washer and bezel nut. Adjust the bezel nuts as necessary to set the fore and aft position of the landing gear switch in the mounting bracket. Torque the fasteners 10 to 18 in-lbs.

(e) Install the landing gear switch light panel.

(f) Install the interior finish panel.

(g) Install the knob using two set screws.

(h) Reset the GEAR CTRL circuit breaker.

(i) Do the landing gear operational check, step 32-30.2.F.

Figure 32-30.5: Landing Gear Switch

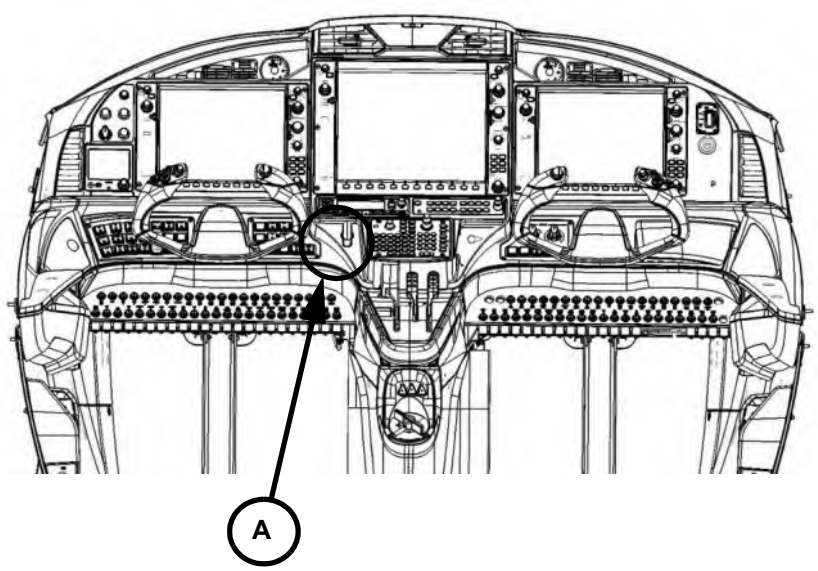

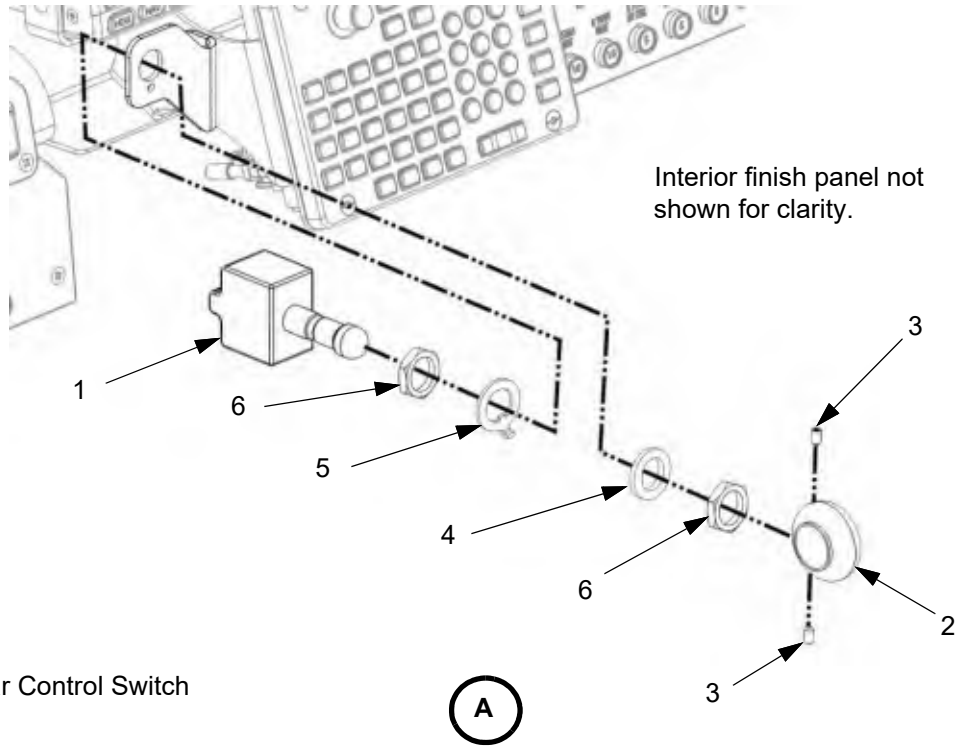

LEGEND

1. Landing Gear Control Switch
2. Knob
3. Set Screw
4. Washer
5. Keyed Washer
6. Nut

F. Landing Gear Operational Check

Ensure the hydraulic reservoir is filled with fluid to the necessary level, and the accumulator, suppressor, and emergency landing gear extension bottle are correctly charged with nitrogen, before doing this test.

(1) Jack the airplane, refer to Chapter 7-10.

Note: Make sure there is enough clearance to swing the landing gear.

(2) Connect a ground power unit to the airplane (refer to Chapter 24-40).

(3) Connect a hydraulic service cart to the airplane.

(4) Set the BATT 1 and BATT 2 switches to ON.

(5) Make sure the landing gear selector is in the DOWN position and all three green (NOSE, LEFT, and RIGHT) down and locked indicators are present both annunciator panels, and green down and locked indications are present on the MFD.

WARNING: Make sure to keep personnel clear of the landing gear when cycling the landing gear up and down.

(6) Turn on the hydraulic service cart.

Note: The hydraulic system should build pressure until the actuators are pressurized and the accumulator is charged. Pressure should build to approximately 2500 psi then drop off to less than 100 psi when the system shifts into re-circulation mode.

(7) Move the landing gear selector switch to the UP position.

(8) Verify the landing gear retracts smoothly and minimum clearances are present:

- 0.25”clearance between any moving part of the landing gear and any airplane structure and equipment, except for,
- 0.100” minimum between the main landing gear damper charging valve and the wheel well liner, and
- 0.188” minimum between the shimmy damper and the engine mount.

(9) Verify there are three red (NOSE, LEFT, and RIGHT) indications on both annunciator panels, and three gray dots on the MFD while the landing gear are in motion.

(10) After the landing gear is retracted hydraulic pressure will build to approximately 2500 psi then drop off to less than 100 psi when the system shifts into re-circulation mode. Verify the HYD PRESS alert message is shown on the primary flight displays when the system is in pressurize mode.

(11) Verify the three red (NOSE, LEFT, and RIGHT) indications on both annunciation panels extinguish and three white (UP) indications appear on the MFD.

(12) Verify the uplock rollers are engaged with the uplock hooks on all three landing gear.

(13) With the landing gear retracted, shut off the hydraulic service cart and pull the GEAR CTRL circuit breaker.

(14) Make sure all three landing gear stay in the retracted position.

(15) Reset the GEAR CTRL circuit breaker and turn the hydraulic service cart on.

(16) Move the landing gear selector switch to the DOWN position.

(17) Verify the landing gear extends smoothly and there is specified clearance with the airplane structure and equipment. Refer to step (9) for clearances.

(18) Verify there are three red (NOSE, LEFT, and RIGHT) indications on both annunciator panels, and three gray dots on the MFD while the landing gear are in motion.

(19) After the landing gear is extended hydraulic pressure will build to approximately 2500 psi then drop off to less than 100 psi when the system shifts into re-circulation mode.

(20) Verify the three red (NOSE, LEFT, and RIGHT) indications in both annunciation panels change to green and the three white dots on the MFD change to green and locked indications on the MFD.

(21) Visually inspect the airplane hydraulic system to ensure there are no leaks.

(22) Repeat steps (8) through (19) five times.

(23) Turn off the hydraulic service cart.

(24) Set the BATT 1 and BATT 2 switches to off.

(25) Disconnect the hydraulic service cart.

(26) Disconnect the ground power unit.

G. Uplock Hook Check

Note: Can be done in conjunction with the Landing Gear Operational Check.

(1) Jack the airplane, refer to Chapter 7-10.

Note: Make sure there is enough clearance to swing the landing gear.

(2) Inspect the uplock hooks for excessive wear or damage to the inner radius of the hook.
(3) Remove the main landing gear doors, refer to Chapter 32-10.2.D.

Note: Mark the position of the landing gear doors for re-installation.

(4) Connect a hydraulic service cart to the airplane.
(5) Connect a ground power unit to the airplane, refer to Chapter 24-40.
(6) Set the BATT 1 and BATT 2 switches to ON.
(7) Turn on the hydraulic service cart and retract the landing gear.
(8) After the landing gear have fully retracted, turn off the hydraulic service cart.
(9) Pull and collar the GEAR CTRL circuit breaker.

WARNING: For the next step, do not position yourself directly below the landing gear. If the landing gear comes off the uplock hook, serious injury may occur.

(10) Measure the gap between each uplock hook and uplock actuator. Make sure the measurement is 0.0625” or less. Do the Main Landing Gear Uplock Actuator Adjustment procedure as needed.
(11) Manually pull down on each landing gear and make sure the landing gear stay in the retracted position on the uplock hooks.
(12) If any of the landing gear pull off of their uplock hook, or the uplock hooks are damaged or have excessive wear, replace the uplock hook(s), refer to Figure 32-30.6.

WARNING: There may be residual hydraulic pressure in the system, resetting the GEAR CTRL circuit breaker may cause the landing gear to move if they have been pulled off of the uplock hooks with the gear handle in the UP position.

(13) Reset the GEAR CTRL circuit breaker.

WARNING: Make sure the landing gear handle is in the UP position and keep personnel clear of the landing gear before turning on the hydraulic cart.

(14) Turn on the hydraulic service cart.

(15) Extend the landing gear to the down and locked position. Make sure all three green down and locked indicators are illuminated in the cockpit.

(16) Turn the hydraulic service cart off.

(17) Install the main landing gear doors, refer to Chapter 32-10.2.D.

(18) Check the adjustment of the main landing gear doors, refer to Chapter 32-10.2.D.

(19) Lower the airplane and remove the aircraft jacks, refer to Chapter 7-10.

(20) Set the BATT 1 and BATT 2 switches to off.

(21) Disconnect the hydraulic service cart.

(22) Disconnect the ground power unit from the airplane, refer to Chapter 24-40.

Figure 32-30.6: Uplock Hook Wear

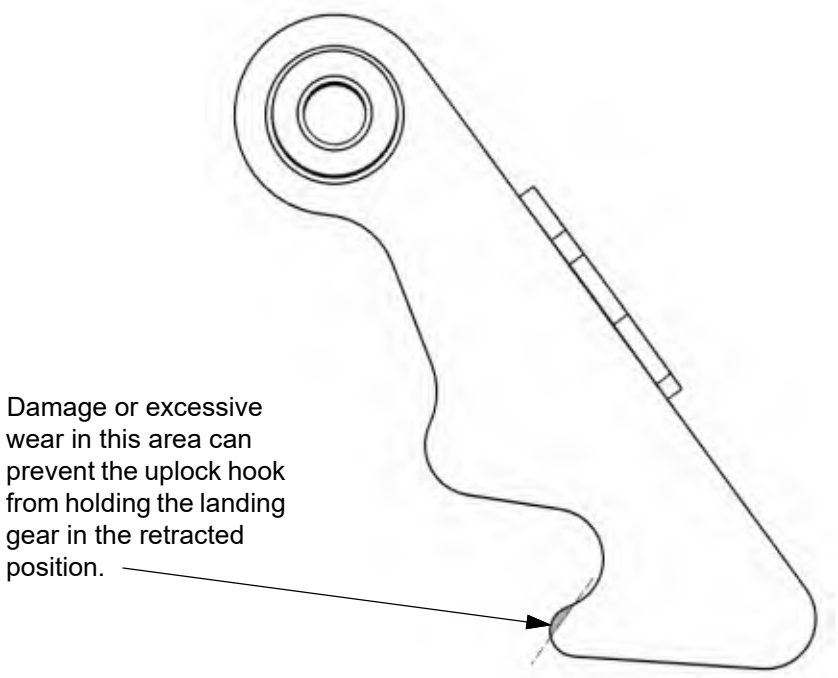

WHEELS AND BRAKES

1. Description

This airplane has a 6.00 x 6 nose wheel and two 18 x 5.5 main wheels. Both types of wheels are made of forged aluminum alloy and use 10-ply tubeless tires. Each wheel has two rim halves, two bearing cups, two bearing cones, two snap rings, and grease seals. The wheel halves are mated using bolts, washers, and nuts.

Individually operated hydraulic brakes are installed on the main wheels and are used to stop the airplane and give steering by differential braking.

The brake hold provides an electronic parking brake function utilizing a servo which applies pressure through a single master cylinder to both main wheels evenly. The servo is activated by the BRAKE HOLD switch located on the left switch panel. The Brake Hold functions is only available while aircraft power is on, eliminating any potential damage caused by towing an aircraft with the brakes applied.

The brake lines in the cockpit are routed differently depending on aircraft serial number. For serial numbers K003 - K010, the brake lines run from the reservoir, through the pilot's master cylinders, to the co-pilot's master cylinders then to the brake assemblies. For serial numbers K011 and on, the brake lines run from the reservoir, through the co-pilot's master cylinders, to the pilot's master cylinders then to the brake assemblies.

Refer to the latest revision of the relevant Parker Hannifin component maintenance manual for disassembly, assembly, and maintenance procedures for the wheel and brake assemblies. Refer to the latest revision of the Goodyear or Michelin maintenance manual for tire care and inspection criteria.

2. Maintenance Practices

A. Main Wheel

Refer to the latest revision of the Parker Hannifin Corporation CM40-434 Component Maintenance Manual with IPL for Main Wheel Assembly P/N 40-434 for detailed maintenance procedures.

(1) Removal

(a) Raise the airplane using aircraft jacks. Ensure there is sufficient clearance from the ground to work on the main gear assembly.

(b) Set the BATT 1 and BATT 2 switches to off.

(c) Remove the main landing gear door (refer to Chapter 32-10).

(d) Deflate the tire completely.

WARNING: Failure to deflate the tire before wheel removal could result in severe personal injury.

WARNING: Do not try to remove the valve core until the tire has been completely deflated. The valve core will be ejected at high velocity if unscrewed before tire pressure has been released.

(e) Remove the axle nut cotter pin then remove the nut and spacer.

(f) Remove the wheel. Do not scratch the axle during wheel removal.

(2) Installation

(a) Clean the axle and apply a thin film of SHC 100, including the threads.

(b) Slide the wheel assembly over the axle and line up the rotating disc on the caliper with the slots in the wheel and install the spacer and nut.

(c) While rotating the wheel and tire, torque the nut 200 to 225 in-lbs (22.6to 25.4 N-m).

(d) Loosen the axle nut until a minimal amount of preload remains.

(e) Re-torque the axle nut 110 to 225 in-lbs (12.4 to 25.4 N-m) while rotating the wheel. Make sure the hole in the axle lines up with a castellation in the axle nut.

(f) Install a new cotter pin.

(g) Inflate the tire with nitrogen to 103 to 108 psi (710.16 to 744.63 kPa). The use of nitrogen is recommended.

(h) Install the main landing gear door (refer to Chapter 32-10).

(i) Ensure the landing gear is fully extended and locked then lower the airplane.

Figure 32-40.1: Main Wheel Assembly

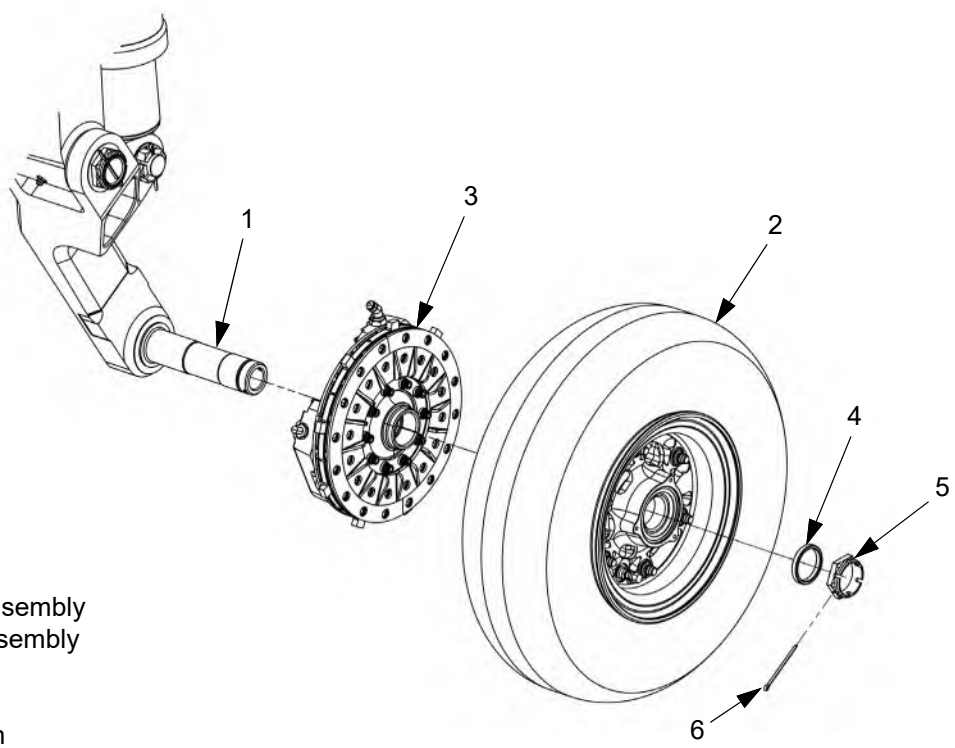

LEGEND

1. Axle
2. Wheel Assembly
3. Brake Assembly
4. Spacer
5. Axle Nut
6. Cotter Pin

(3) Inspection, cleaning and Repair-

Refer to Parker Hannifin Corporation CM40-434 Component Maintenance Manual With IPL For Main Wheel Assembly P/N 40-434 for inspection, cleaning and repair procedures.

B. Nose Wheel

Refer to the latest revision of the Parker Hannifin Corporation CM40-423 Component Maintenance Manual with IPL for Nose Wheel Assembly P/N 40-423 for disassembly, assembly, and maintenance procedures.

(1) Removal

(a) Raise the airplane using aircraft jacks. Ensure there is sufficient clearance from the ground to work on the nose gear assembly.

(b) Set the BATT 1 and BATT 2 switches to off.

(c) Deflate the tire completely.

WARNING: Failure to deflate the tire before wheel removal could result in severe personal injury.

WARNING: Do not try to remove the valve core until the tire has been completely deflated. The valve core will be ejected at high velocity if unscrewed before tire pressure has been released..

(d) Remove the axle nut cotter pin then remove the nut and spacer.

(e) Remove the axle. Do not scratch the axle during wheel removal.

(f) Remove the wheel, bushings, spacers, and shims.

(2) Installation

(a) Clean the axle and apply a thin film of SHC 100, including the threads.

(b) Put the wheel into the fork with the valve stem on the left side of the airplane then install the bushings, spacers, and shims.

(c) Slide the axle through the wheel and fork.

(d) Install the washers and axle nut.

(e) While rotating the wheel and tire, torque the nut 200 to 225 in-lbs (22.6to 25.4 N-m).

(f) Loosen the axle nut until a minimal amount of preload remains.

(g) Re-torque the axle nut 110 to 225 in-lbs (12.4 to 25.4 N-m) while rotating the wheel. Make sure the hole in the axle lines up with a castellation in the axle nut.

(h) Install a new cotter pin.

(i) Inflate the tire with nitrogen to 65 to 70 psi (448.16 to kPa).

(j) Ensure the landing gear is fully extended and locked then and lower the airplane.

Figure 32-40.2: Nose Wheel Assembly

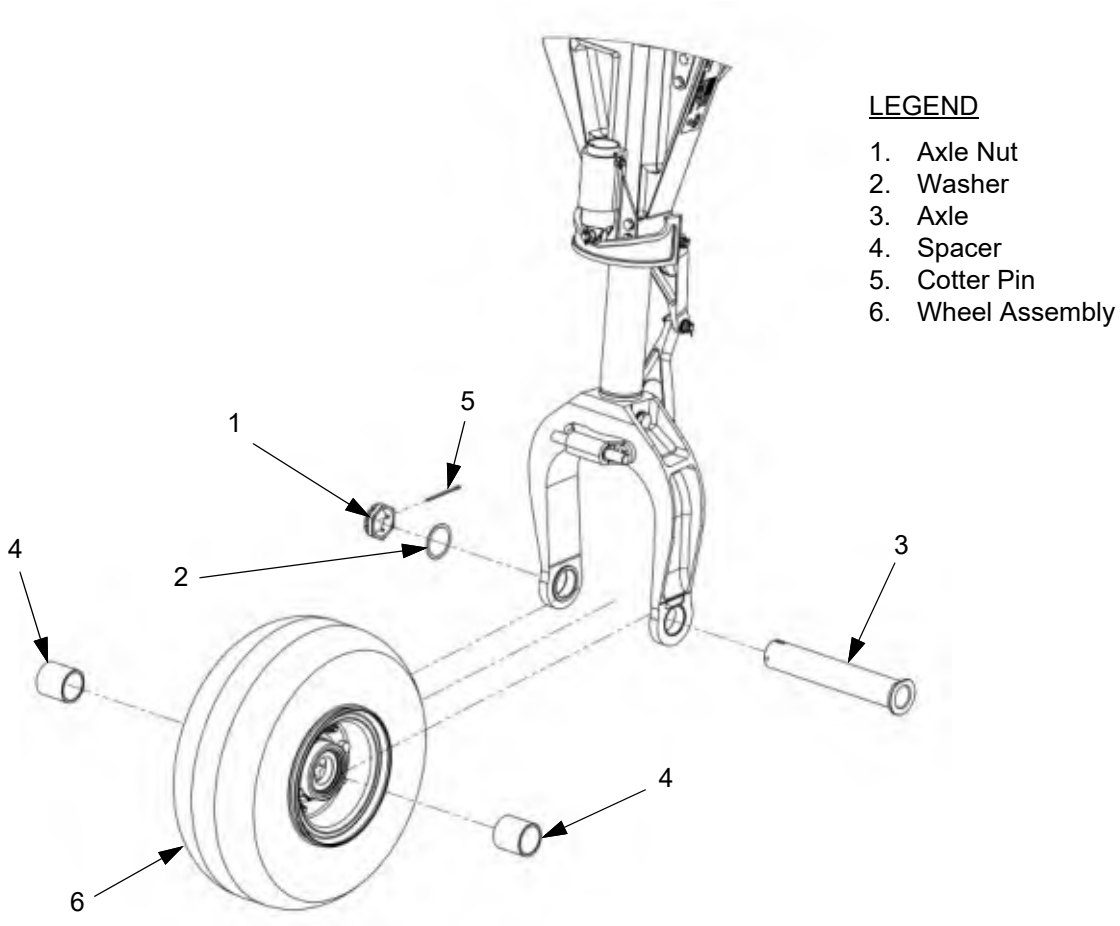

(3) Inspection, cleaning and Repair-

Refer to Parker Hannifin Corporation CM40-423 Component Maintenance Manual With IPL For Nose Wheel Assembly P/N 40-423 for inspection, cleaning and repair procedures.

C. Brakes

The airplane braking system has individually activated hydraulic brakes installed on the main wheels, master cylinders on each of the four rudder pedals, a hydraulic fluid reservoir, and hydraulic plumbing. Each brake assembly has a pressure plate assembly, a single rotating disk, a torque plate assembly, and a cast aluminum cylinder housing containing six pistons. Drive tangs on the perimeter of the rotating disc engage drive slots in the inner wheel half flange to transfer braking energy to the wheel. This brake is designed to operate using MIL-PRF-87257 or MIL-PRF-83282 hydraulic fluid.

The left and right brake assemblies are interchangeable by switching the elbow fitting and bleeder components.

Refer to the latest revision of Parker Hannifin Corporation CM30-191 Component Maintenance Manual With IPL For Main Brake Assembly P/N 30-191 for removal, installation, and maintenance procedures.

(1) Removal

(a) Remove the main wheel.

(b) Disconnect and cap the brake line.

(c) Remove the fastener that attached the wheel speed sensor mount to the brake (SN: K014, K086 and On)

(d) Gently pull the brake assembly over the axle of the main gear.

(2) Installation

(a) Clean the axle and apply a thin film of SHC 100.

Note: Verify the bleeder valve and brake line fitting are correctly oriented for left or right installation.

(b) Slide the brake assembly fully onto the axle. Make sure the anti-rotation cut-out on the brake aligns with the trailing link.

(c) Connect the brake line to the brake assembly.

(d) Put the wheel speed sensor bracket in position and install the fastener.

(e) Bleed the brake system. Refer to Chapter 32-40.2.E.

(f) Condition the brakes as required by the latest revision of Parker Aerospace Technician's Service Guide, P/N AWBTSG0001-20.

(g) Aircraft SN:K086 and on, perform the Brake Servo Assembly Operational Check, refer to Chapter 32-40.2.(4).

(3) Inspection, cleaning and Repair

Refer to Parker Hannifin Corporation CM30-191 Component Maintenance Manual With IPL For Main Brake Assembly P/N 30-191 for inspection, cleaning and repair procedures. For aircraft SN:K086 and on, when performing any maintenance on the brakes, the Brake Servo Assembly Operational Check must be performed, refer to Chapter 32-40.2.(4).

Figure 32-40.3: Brake Assembly

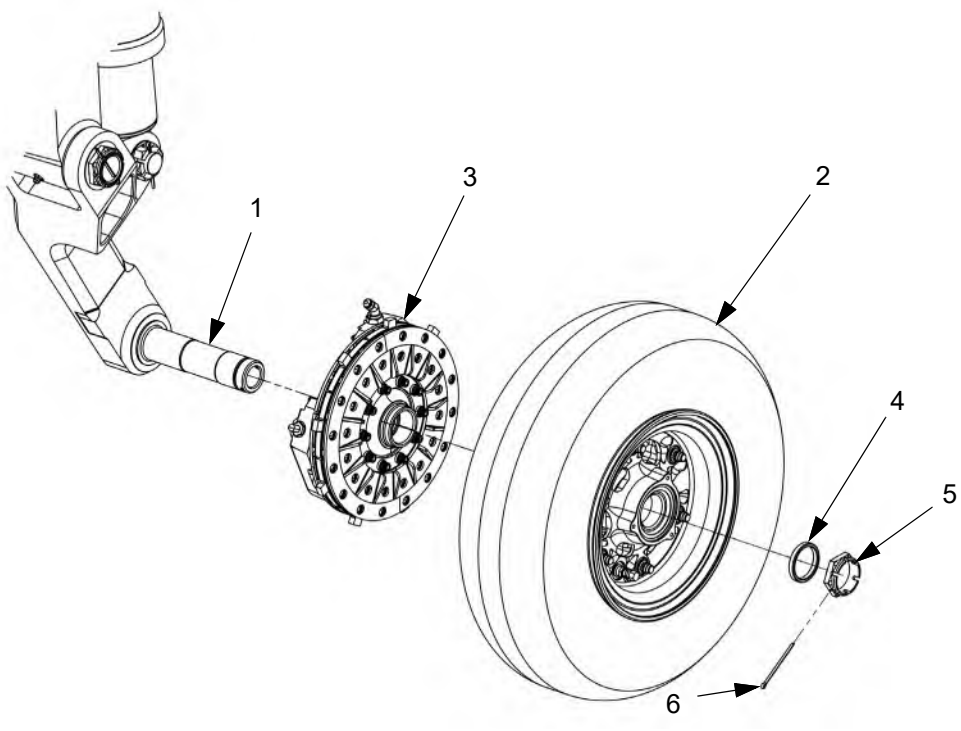

LEGEND

1. Axle
2. Wheel Assembly
3. Brake Assembly
4. Spacer
5. Axle Nut
6. Cotter Pin

D. Brake Master Cylinder

(1) Removal

(a) Set the BATT 1 and BATT 2 switches to off.

(b) Install wheel chocks on the main wheels.

(c) Remove the crew carpet (refer to Chapter 25-10).

(d) Remove access panel 3LC (refer to Chapter 6).

(e) Install the rigging pin into the rudder bellcrank.

(f) Drain the hydraulic fluid from the brake system.

(g) Disconnect the hoses from the master cylinder. Cap or plug the ports and hoses.

(h) Remove the cotter pins, castellated nuts, washers, and bolts attaching the master cylinder to the rudder pedal and the rudder pedal bracket.

(i) Remove the master cylinder.

(2) Installation

(a) Attach the master cylinder to the rudder pedal bracket using a bolt, washers, castellated nut, and a cotter pin.

(b) Loosen the jam nut on the clevis rod end then screw or unscrew the clevis as necessary to set or maintain the pedal at the desired angle. Do not unscrew the clevis beyond minimum thread engagement.

(c) Attach the master cylinder to the rudder pedal using a bolt, washers, castellated nut, and a cotter pin.

(d) Connect the hoses.

(e) Fill the brake system with hydraulic fluid and bleed out all the air bubbles.

(f) Verify operation of the brakes.

(g) Remove the rigging pin from the rudder bellcrank.

WARNING: Failure to remove the rigging pin will make the rudder inoperable.

(h) Install access panel 3LC (refer to Chapter 6).

(i) Install the crew carpet (refer to Chapter 25-10).

Figure 32-40.4: Brake Master Cylinder

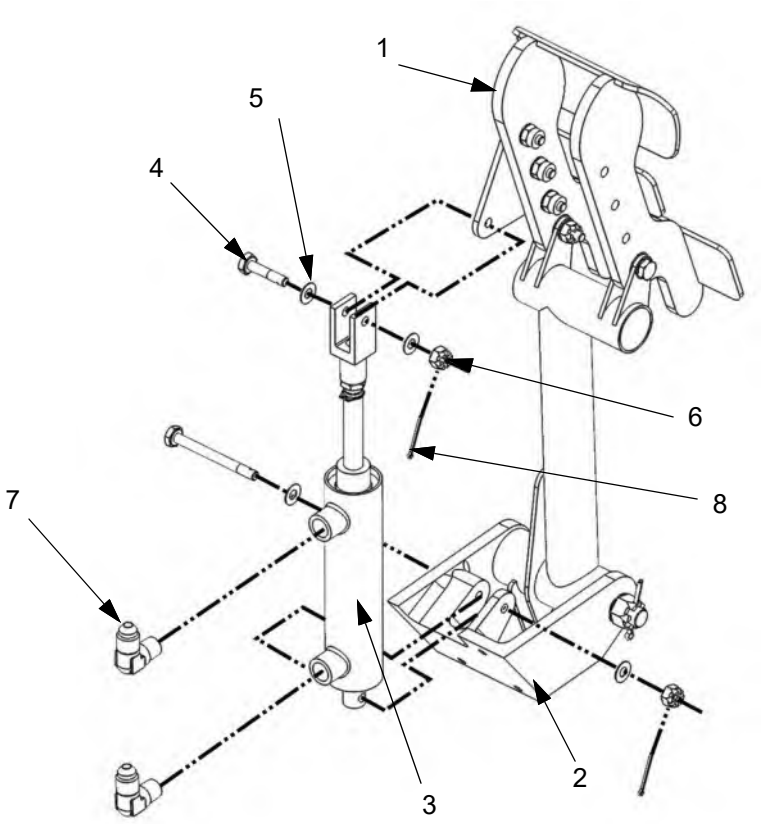

LEGEND

1. Rudder Pedal
2. Rudder Pedal Bracket
3. Brake Master Cylinder
4. Bolt
5. Washer
6. Castellated Nut
7. Hydraulic Fitting
8. Cotter Pin

E. Bleeding the Brake System K003-K085 (except K014)

The brake fluid in the brake system has to be serviced if any of the brake lines are disconnected or any of the components of the system are replaced. These actions can introduce air into the system which must be removed. A “soft” or “spongy” feel to the brakes when they are used is an indication that air has gotten into the system.

(1) Install wheel chocks on the main wheels.
(2) Remove the top cowl (refer to Chapter 71-10).
(3) Connect clear flexible tubing to the end of the brake reservoir vent tube, then put the open end of the tubing into a container to catch fluid.
(4) Remove the bleeder valve cap from the left or right brake caliper.
(5) Fill the hydraulic pressure source with brake fluid (MIL-PRF-83282 or MIL-PRF-87257).
(6) Connect a hydraulic pressure source to the bleeder valve.
(7) Loosen the bleeder valve, then operate the pressure source to force brake fluid into the system. Maintain pressure in the system throughout the bleeding procedure.
(8) Depress the brake pedal repeatedly while observing the clear tube on the reservoir vent for bubbles.
(9) After no air bubbles are visible in the clear flexible tube, continue to bleed approximately 32 oz of fluid through the system to ensure all air is removed.
(10) Close the bleeder valve then remove the hydraulic pressure source.
(11) Install the bleeder valve cap.
(12) Repeat this process for the right or left brake caliper.
(13) Remove the clear flexible tubing from the brake reservoir vent.
(14) Remove the brake reservoir vent tube from the reservoir then drain the fluid out of the tube.
(15) Re-install the brake reservoir vent tube onto the brake reservoir.
(16) Clean up any brake fluid that may have spilled.
(17) Install the top cowl (refer to Chapter 71-10).
(18) Remove the wheel chocks from the main wheels.

F. Bleeding the Brake System K014, K086 and On

The brake fluid in the brake system has to be serviced if any of the brake lines are disconnected or any of the components of the system are replaced. These actions can introduce air into the system which must be removed. A “soft” or “spongy” feel to the brakes when they are used is an indication that air has gotten into the system.

(1) Install wheel chocks on the main wheels.
(2) Remove the top cowl (refer to Chapter 71-10).
(3) Connect clear flexible tubing to the end of the brake reservoir vent tube, then put the open end of the tubing into a container to catch fluid.

(4) Remove the bleeder valve cap from the left or right brake caliper.

(5) Fill the hydraulic pressure source with brake fluid (MIL-PRF-83282 or MIL-PRF-87257).

(6) Connect a hydraulic pressure source to the bleeder valve.

(7) Loosen the bleeder valve, then operate the pressure source to force brake fluid into the system. Maintain pressure in the system throughout the bleeding procedure.

(8) Depress the brake pedal repeatedly while observing the clear tube on the reservoir vent for bubbles.

(9) Cycle the BRAKE HOLD switch as needed to bleed all air from the system.

Note: It is acceptable to remove the brake hold servo perimeter fasteners and lift the aft end the brake hold servo assembly so that the master cylinder is oriented vertically to aid in bleeding process. If this is done, reinstall all fasteners after bleeding process.

(10) After no air bubbles are visible in the clear flexible tube, continue to bleed approximately 32 oz of fluid through the system to ensure all air is removed.

(11) Close the bleeder valve then remove the hydraulic pressure source.

(12) Install the bleeder valve cap.

(13) Repeat this process for the other brake caliper.

(14) Remove the clear flexible tubing from the brake reservoir vent.

(15) Remove the brake reservoir vent tube from the reservoir then drain the fluid out of the tube.

(16) Re-install the brake reservoir vent tube onto the brake reservoir.

(17) Clean up any brake fluid that may have spilled.

(18) Install the top cowl (refer to Chapter 71-10).

(19) Remove the wheel chocks from the main wheels.

G. Brake Lines and Hoses

(1) Removal

(a) Install wheel chocks on the main wheels.

(b) Set the BATT 1 and BATT 2 switches to off.

(c) Disconnect external electrical power from the airplane (refer to Chapter 24-40).

(d) Remove the cowling (refer to Chapter 71-10).

(e) Remove the crew carpet and flooring, as necessary. Refer to Chapter 25-10 and 53-20.

(f) Remove the airplane belly pan (refer to Chapter 57-10), as necessary.

(g) Unfasten any clamps attaching the brake line to be removed.

(h) Remove the brake line(s) or hose(s).

(i) Cap or plug all open connections to keep contamination out of the system and to minimize brake fluid loss.

(2) Installation

Note: Seal all pipe threads using Loctite™ 567 or anti-seize PTFE tape conforming to A-A-58092-2-2.

Note: Where a torque wrench can not be used, tighten straight thread fittings 2 to 3 flats past wrench resistance.

Note: Install pipe thread fittings 1/2 to 1-1/2 turns beyond hand tight.

(a) Install the brake line(s) or hose(s).
(b) Bleed the brake system, as necessary.
(c) Service the brake system (refer to Chapter 12-10).
(d) Install the flooring and carpet, as necessary. Refer to Chapter 25-10 and 53-20.
(e) Install the airplane belly pan (refer to Chapter 57-10), as necessary.
(f) Install the cowling (refer to Chapter 71-10).

H. Brake Reservoir

(1) Removal
(a) Install wheel chocks on the main wheels.
(b) Set the BATT 1 and BATT 2 switches to off.
(c) Disconnect external electrical power from the airplane (refer to Chapter 24-40).
(d) Remove the upper cowling (refer to Chapter 71-10).
(e) Put rags below the brake reservoir to catch excess fluid.
(f) Drain the brake reservoir.
(g) Remove the brake reservoir to firewall brake line.
(h) Cap or plug all open connections to keep contamination out of the system and to minimize brake fluid loss.
(i) Remove the two bolts that attach the brake reservoir to the mounting bracket.
(j) Remove the brake reservoir.
(k) Remove the vent tube and fittings as necessary.

(2) Installation
(a) Installation is the reverse of removal.
(b) Service the brake system (refer to Chapter 12-10).
(c) Bleed the brake system, as necessary.
(d) Install the upper cowling (refer to Chapter 71-10).

Figure 32-40.5: Brake System (K003- K085, Except K014) (Sheet 1 of 7)

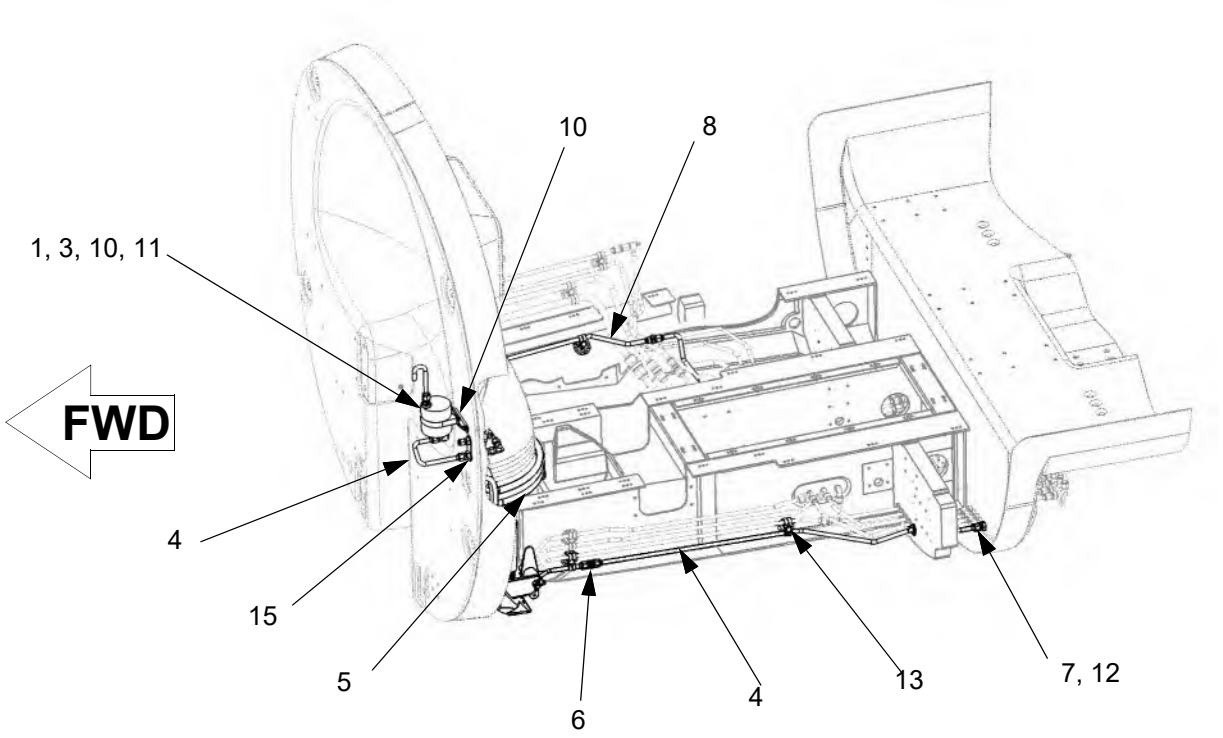

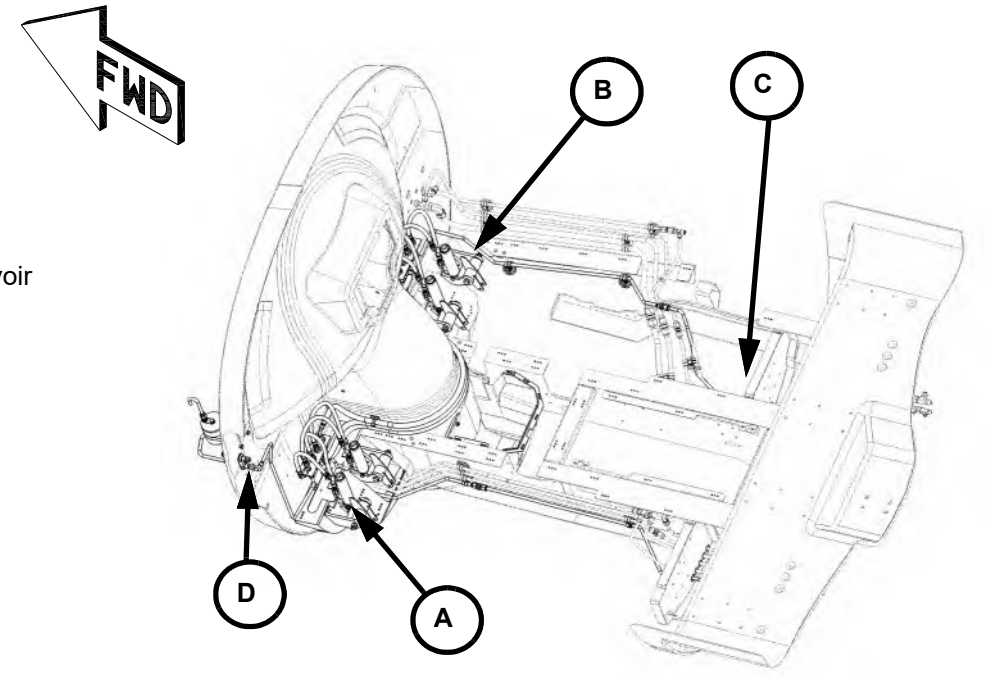

LEGEND

1. Brake Fluid Reservoir
2. Master Cylinder
3. Vent Tube
4. Tubing
5. Hose
6. Union
7. Bulkhead Fitting
8. Elbow
9. Tee
10. Bracket
11. Bolt
12. Nut
13. Loop Clamp
14. Tie Down
15. Plate

Figure 32-40.5: Brake System (K014, K086 and On) (Sheet 2 of 7)

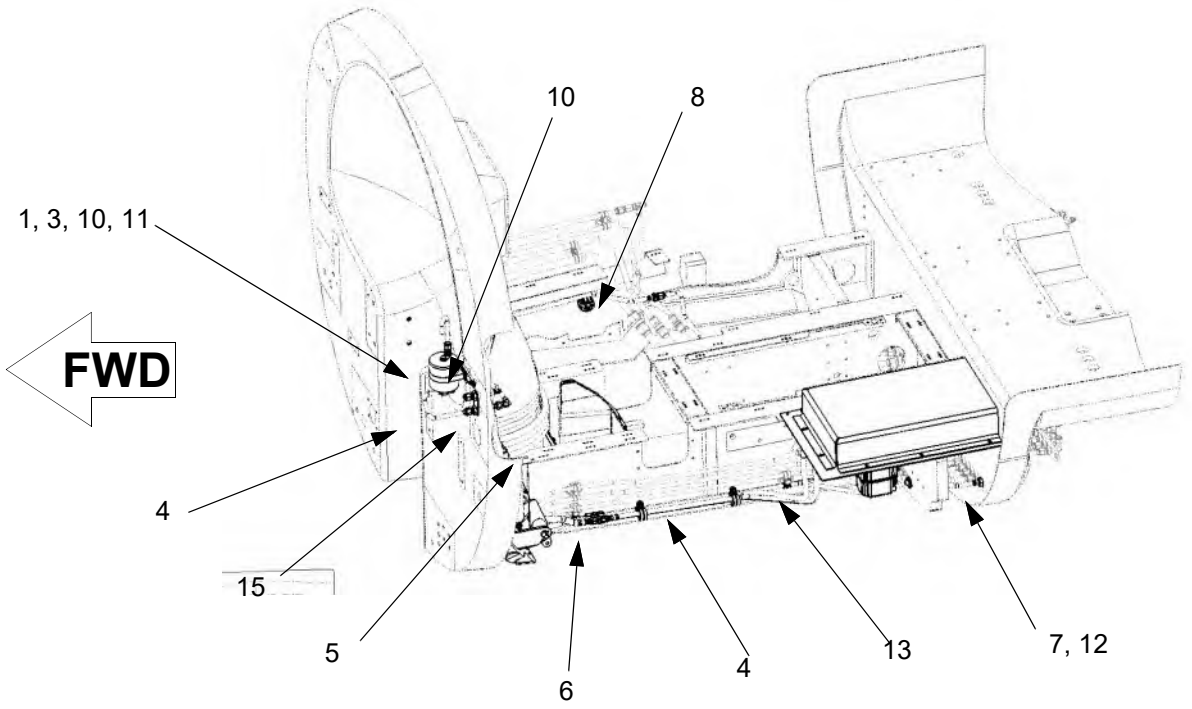

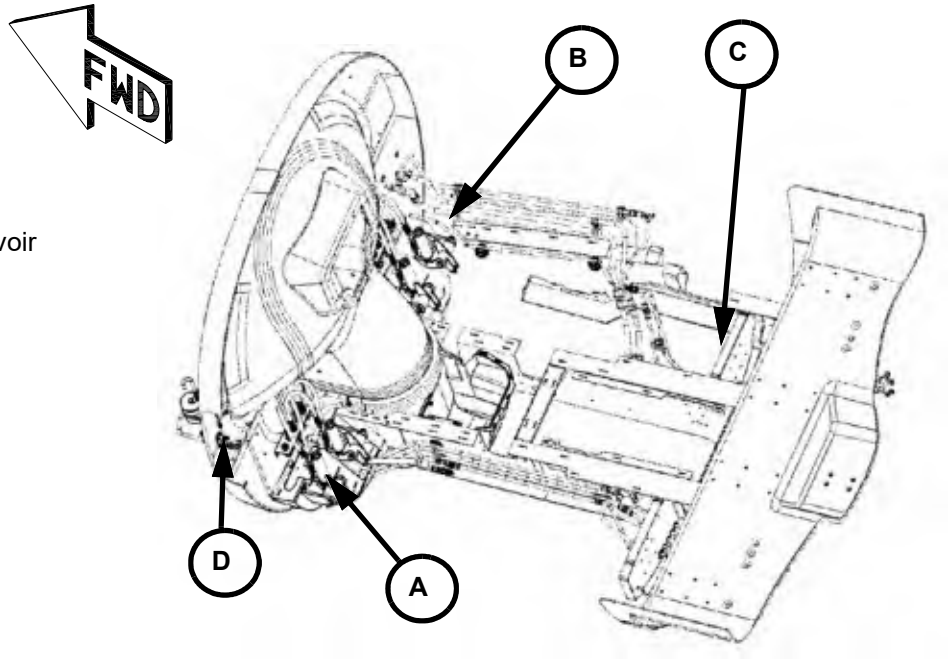

LEGEND

1. Brake Fluid Reservoir
2. Master Cylinder
3. Vent Tube
4. Tubing
5. Hose
6. Union
7. Bulkhead Fitting
8. Elbow
9. Tee
10. Bracket
11. Bolt
12. Nut
13. Loop Clamp
14. Tie Down
15. Plate

Figure 32-40.5: Brake System - Cockpit Lines (K003-K010) (Sheet 3 of 7)

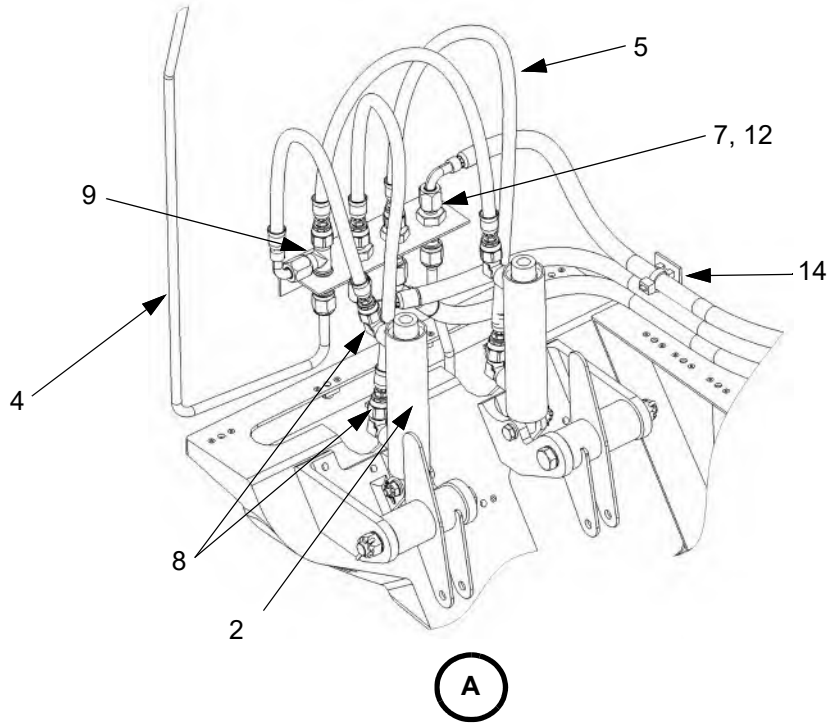

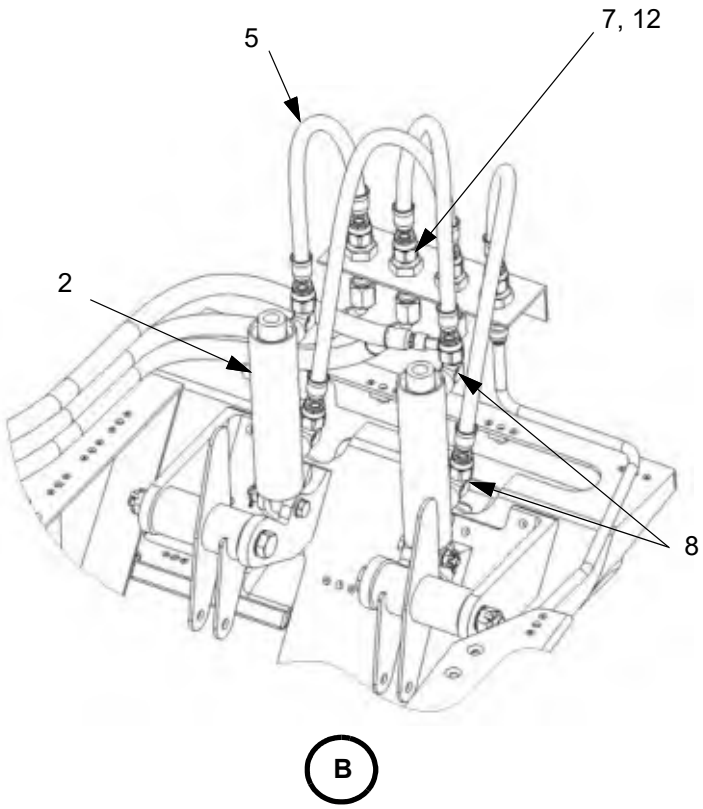

LEGEND

1. Brake Fluid Reservoir
2. Master Cylinder
3. Vent Tube
4. Tubing
5. Hose
6. Union
7. Bulkhead Fitting
8. Elbow
9. Tee
10. Bracket
11. Bolt
12. Nut
13. Loop Clamp
14. Tie Down

Figure 32-40.5: Brake System - Cockpit Lines (K011 - K085, except K014) (Sheet 4 of 7)

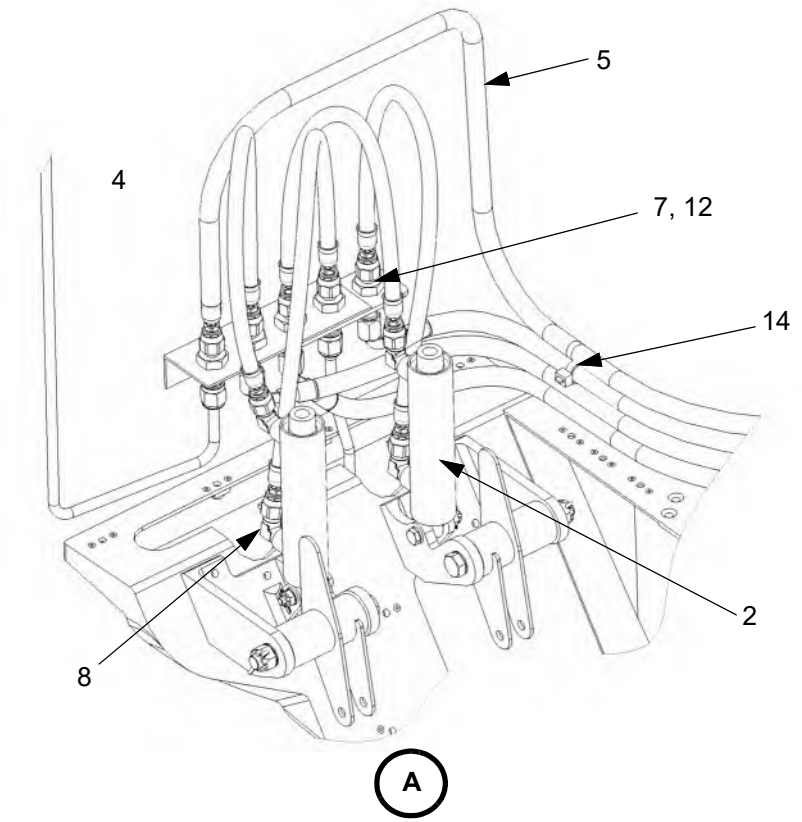

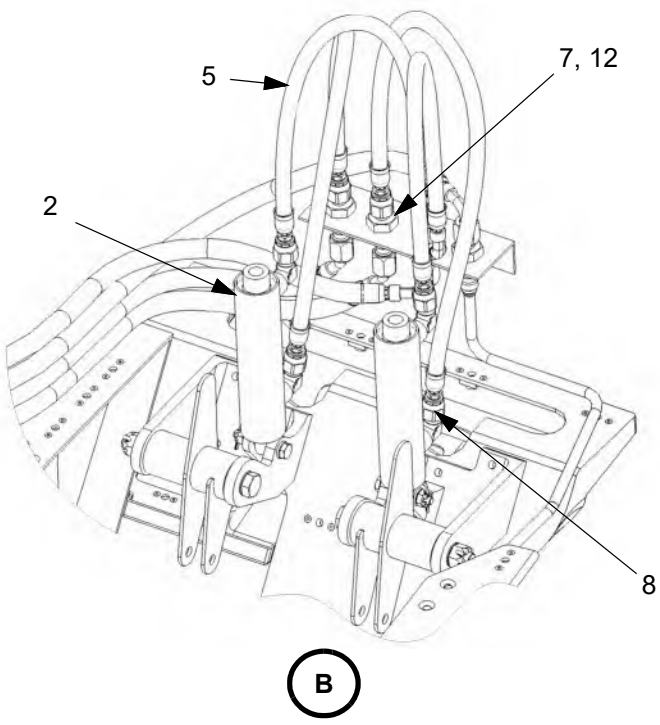

LEGEND

1. Brake Fluid Reservoir
2. Master Cylinder
3. Vent Tube
4. Tubing
5. Hose
6. Union
7. Bulkhead Fitting
8. Elbow
9. Tee
10. Bracket
11. Bolt
12. Nut
13. Loop Clamp
14. Tie Down

Figure 32-40.5: Brake System - Cockpit Lines (K014, K086 and On) (Sheet 5 of 7)

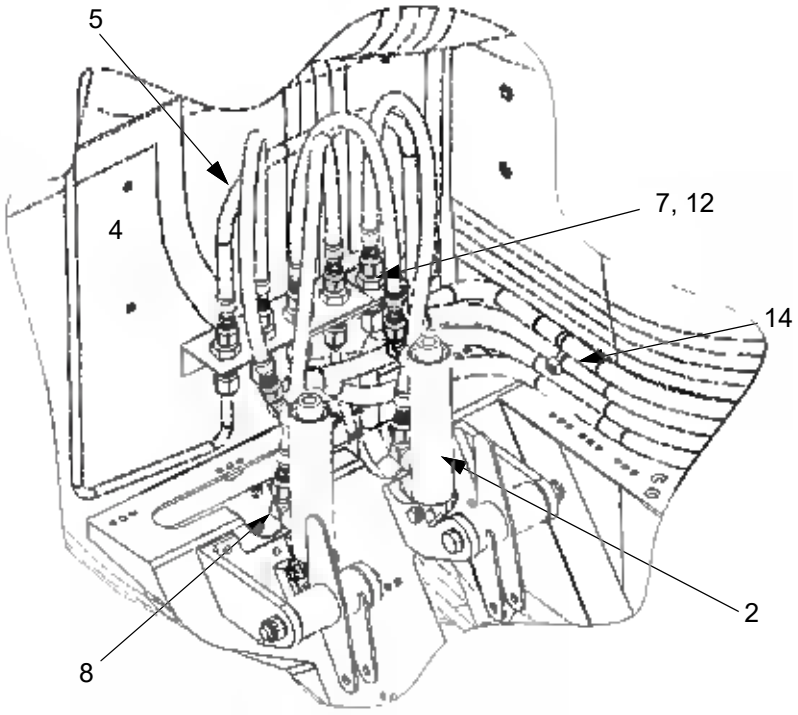

A

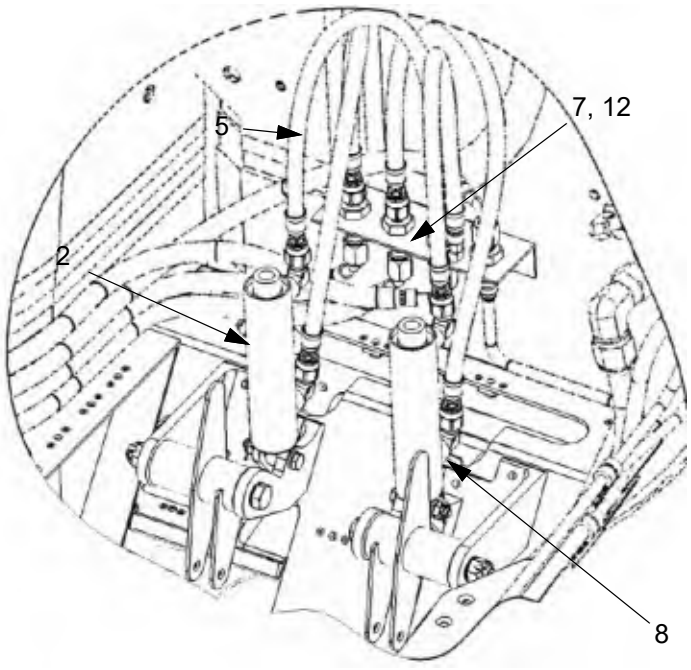

B

LEGEND

1. Brake Fluid Reservoir
2. Master Cylinder
3. Vent Tube
4. Tubing
5. Hose
6. Union
7. Bulkhead Fitting
8. Elbow
9. Tee
10. Bracket
11. Bolt
12. Nut
13. Loop Clamp
14. Tie Down

Figure 32-40.5: Brake System - Underfloor (Sheet 6 of 7)

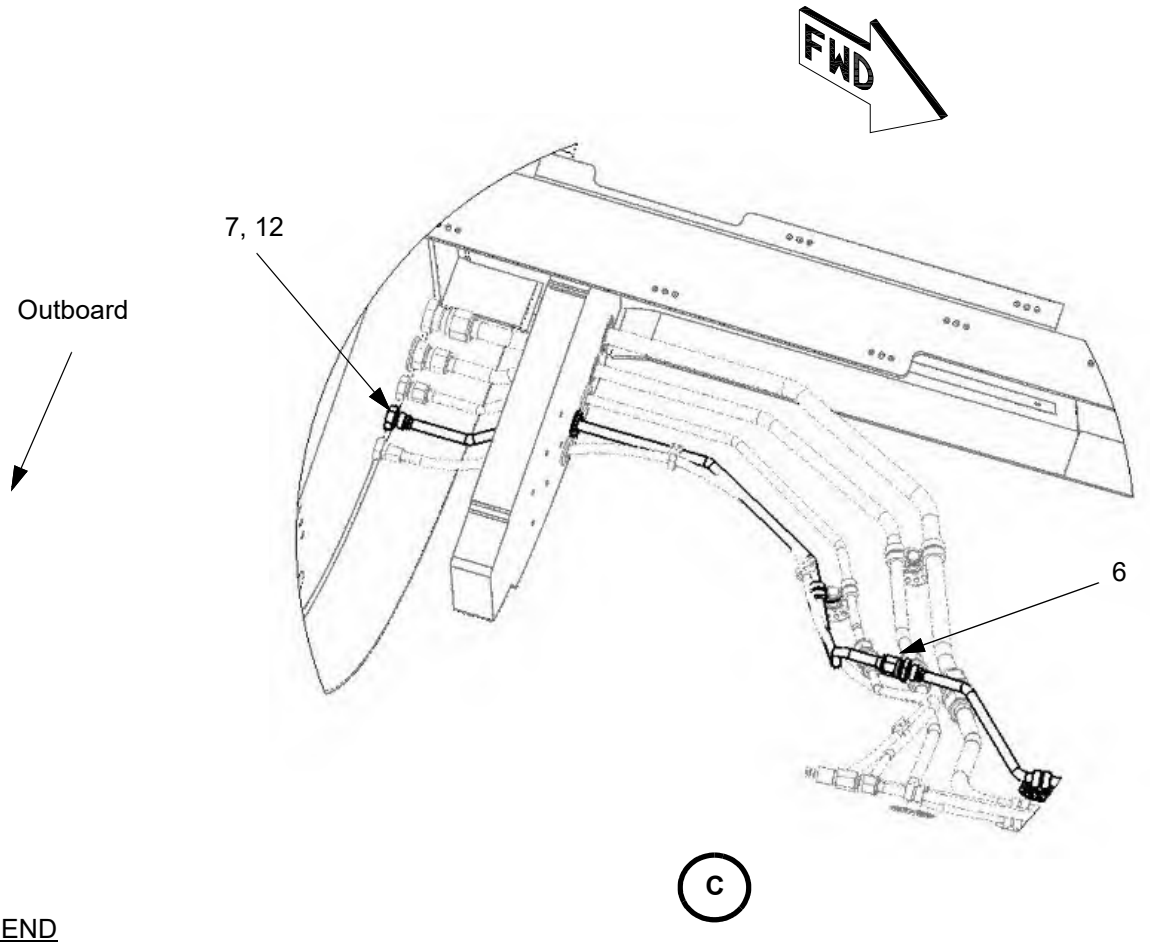

LEGEND

1. Brake Fluid Reservoir
2. Master Cylinder
3. Vent Tube
4. Tubing
5. Hose
6. Union
7. Bulkhead Fitting
8. Elbow
9. Tee
10. Bracket
11. Bolt
12. Nut
13. Loop Clamp
14. Tie Down
15. Plate
16. 90 Degree Swivel Fitting

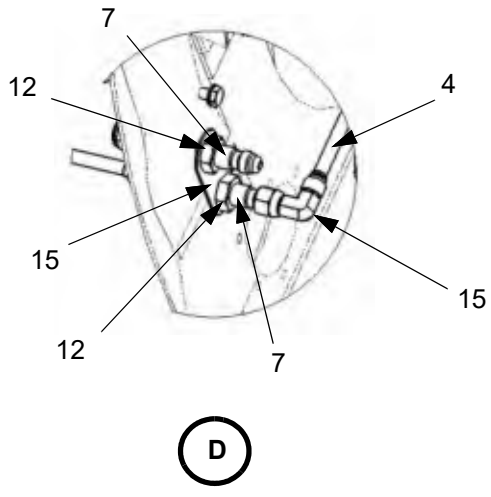

Figure 32-40.5: Brake System - Wheel Wells (Sheet 7 of 7)

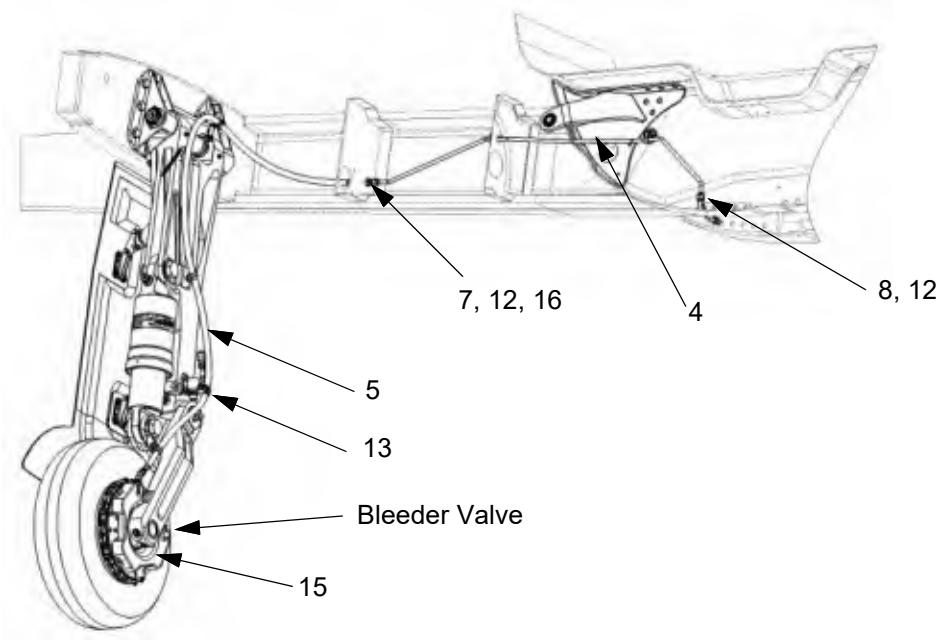

Left Main Gear

LEGEND

1. Brake Fluid Reservoir
2. Master Cylinder
3. Vent Tube
4. Tubing
5. Hose
6. Union
7. Bulkhead Fitting
8. Elbow
9. Tee
10. Bracket
11. Bolt
12. Nut
13. Loop Clamp
14. Tie Down
15. Brake
16. Washer

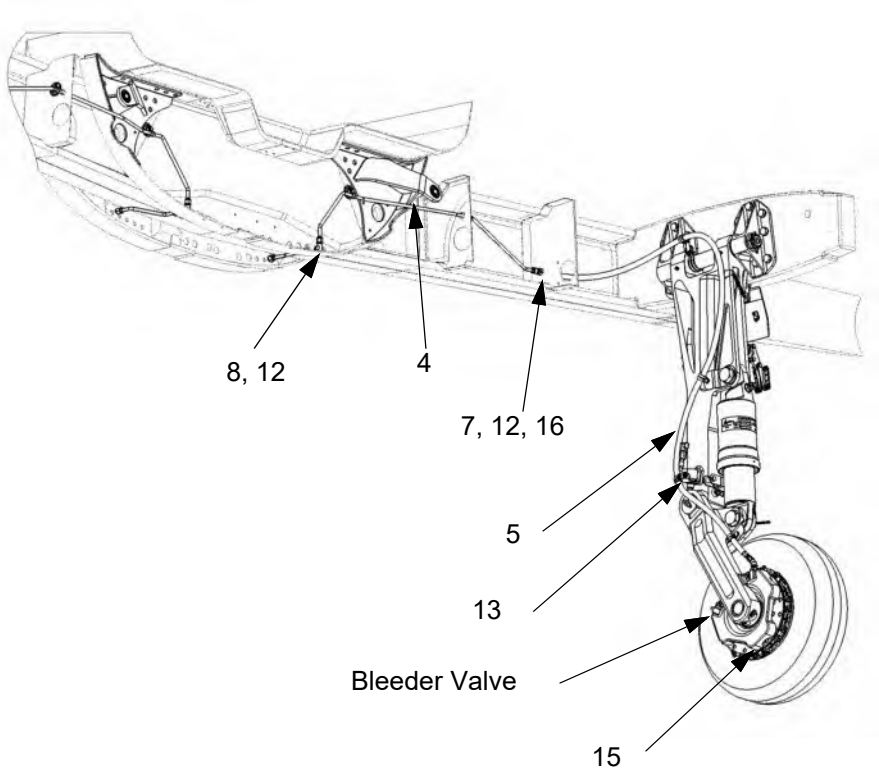

Right Main Gear

I. Brake Servo Assembly (K014, K086 and on):

(1) Removal

(a) Set the BATT 1 and BATT 2 switches to off.

(b) Disconnect external electrical power from the airplane (refer to Chapter 24-40).

(c) Pull and collar the AUTO BRAKES circuit breaker.

(d) Remove pilot seat (refer to Chapter 25-10).

(e) Remove the bolts and washers that attach the chain guard and brake servo assembly to the floor and remove the chain guard.

(f) Disconnect the brake lines from the master cylinder. Cap and plug open lines and fittings.

(g) Carefully lift the brake servo assembly and disconnect the electrical connector from the servo.

(h) Remove the brake servo assembly from the aircraft.

(i) To remove the master cylinder:

(1) Remove the bolts that attach the master cylinder support to the mount and pivot the support away from the mount.

(2) Remove the cotter pins, nuts, washers, and bolts that attach the master cylinder to the mount and bellcrank.

(3) Remove the master cylinder.

(4) If needed, remove the fittings from the master cylinder.

Note: Make note of the clocking of the fittings for installation.

(ii) To remove the servo:

(1) Remove the lower chain tensioner housing bolt, then loosen the upper chain tensioner housing bolt and pivot the chain tensioner away from the chain.

(2) Remove the bolts and washers that attach the servo to the floor mount.

(3) Remove the chain from the servo sprocket and remove the servo.

(2) Installation

(a) If removed, install the master cylinder as follows:

(i) If removed, install the fittings on the master cylinder using PTFE tape or Loctite 565/567.

(ii) Tighten the fittings 1 1/2 -3 turns past hand tight to the clocking noted during removal.

(iii) Put the master cylinder in position and install the bolts, washers and nuts that attach the master cylinder to the mount and bellcrank.

(iv) Rotate the support into position and install the bolts that attach it to the mount. Torque the bolts to 20-25 in-lbs.

(v) Torque the bolt that attaches the support and bellcrank assembly to the floor mount to 50-70 in-lbs.

(b) If removed, install the servo as follows:

(i) Put the servo in position on the floor mount, and wrap the chain around the sprocket.

(ii) Install the bolts and washers that attach the servo to the floor mount.

(iii) Torque the bolts to 20-25 in-lbs. and install safety wire.

(iv) Rotate the chain tensioner into position and install the lower housing bolt.

(v) Torque the upper and lower chain tensioner housing bolts to 20-25 in-lbs.

(c) Put the brake servo assembly in position and connect the electrical connector to the servo.

(d) Connect the brake lines to the master cylinder and torque the fittings to 135-150 in-lbs.

(e) Close the AUTO BRAKES circuit breaker.

(f) Bleed the brakes, refer to Chapter 32-40.2.F.

(g) Perform the Adjustment procedure, refer to step (3).

(h) Perform the Operational Check, refer to step (4).

(i) Inspect the brake servo assembly for leaks.

(j) Put the chain guard in position and install the bolts and washers that attach the chain guard to the floor.

(k) Install pilot seat (refer to Chapter 25-10).

(3) Adjustment

Note: If brake bleeding is required, it must be performed before this adjustment procedure.

(a) Remove pilot seat (refer to Chapter 25-10).

(b) Remove the brake servo assembly chain guard.

(c) Loosen the clevis jam nut on the master cylinder.

(d) Set the BATT 1 and BATT 2 switches to ON.

Note: In this procedure, the term "stall" refers to the stop arm fully stopping *before* contacting the stop (spring tensioner housing). The term "hesitate" refers to a slowing or momentary pause in the movement of the stop arm, before contacting the stop.

(e) Set the BRAKE HOLD switch to ON.

(f) If the servo cycles and stop arm does not contact the stop, proceed to step (k). If the servo cycles and stop arm contacts the stop, do the steps that follow:

(i) Set the BRAKE HOLD switch to off.

CAUTION: Only use a strap wrench or soft jawed pliers to rotate the master cylinder piston.

(ii) Adjust the clevis out (lengthen the master cylinder) 1 full turn.

Note: Reference marks can be made on the clevis and piston with a Sharpie so rotations can be counted. Full turn increments are recommended, but 1/2 turn increments can be used if fine tuning of the movement is required.

(iii) Set the BRAKE HOLD switch to ON.

(iv) If the stop arm contacts the stop, set the BRAKE HOLD switch to off and repeat steps (ii) thru (iv) until the stop arm stalls before contacting the stop.

(g) Set the BRAKE HOLD switch to off and rotate the piston 3 full turns in (shorten the master cylinder).

(h) Set the BRAKE HOLD switch to ON and make sure the stop arm contacts the stop in no more than 5 seconds.

Note: A slight hesitation of the stop arm is acceptable as long as it contacts the stop within 5 seconds.

(i) Cycle the system a minimum of 10 times and make sure the stop arm contacts the stop every cycle.

(j) If the stop arm contacts the stop every cycle, make sure threads are present in the witness hole of the clevis, then torque the jam nut to 60-85 in-lbs and proceed to step (iv).

(k) If the stop arm stalls before contacting the stop, do the steps that follow:

(i) Turn the piston inward in 1-turn increments until the stop arm contacts the stop when the brake hold is engaged.

(ii) Turn the piston in 2 additional full turns.

(iii) Cycle the system 10 times and make sure the stop arm contacts the stop every cycle.

Note: It is acceptable for the clevis to be bottomed out on the piston.

(iv) Make sure threads are present in the witness hole of the clevis, then torque the jam nut to 60-85 in-lbs.

(l) Set the BRAKE HOLD switch to off.

(m) Set the BATT 1 and BATT 2 switches to off.

(n) Install the brake servo assembly chain guard.

(o) Install pilot seat, refer to Chapter 25-10.

(p) Perform the Operational Check, refer to step (4).

(4) Operational Check

(a) Put the airplane in a suitable run-up area.

Note: Make sure the airplane is on a flat surface and won't roll when unchocked.

(b) Start the engine, refer to Chapter 71-00.2.H.

(c) Make sure the airplane is not chocked and the brakes are not manually applied.

(d) Set the BRAKE HOLD switch to ON.

(e) Set the COND lever to HIGH.

(f) Make sure the PROP lever is at MAX RPM.

(g) Verify the BRAKE HOLD advisory CAS message illuminates.

CAUTION: Manually apply the brakes if the airplane begins to move.

(h) Make sure the Brake Hold system holds the aircraft stationary. If the airplane rolls, perform the Adjustment Procedure, refer to step (3).

(i) Manually apply the brakes.

(j) Set the BRAKE HOLD switch to off.

(k) Verify the BRAKE HOLD advisory CAS message extinguishes.

(l) Verify the brakes release.

(m) Shut down the engine, refer to Chapter 71-00.2.S.

WARNING: FAILURE OF THE AUTOMATIC BRAKING SYSTEM WILL DEGRADE EMERGENCY AUTOLAND SYSTEM PERFORMANCE AND MAY RESULT IN DAMAGE TO THE AIRFRAME OR INJURY TO THE OCCUPANTS.

Figure 32-40.6: Brake Servo Assembly (K014, K086 and On) (Sheet 1 of 2)

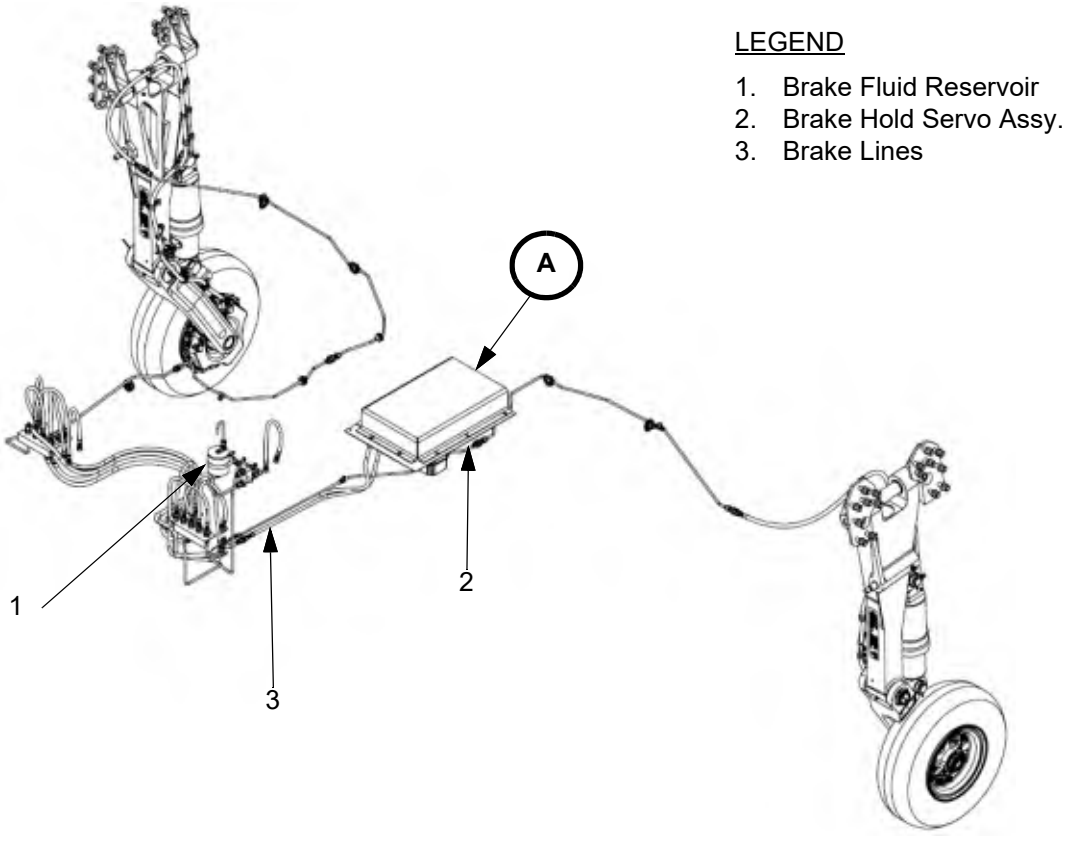

Figure 32-40.6: Brake Servo Assembly (K014, K086 and On) (Sheet 2 of 2)

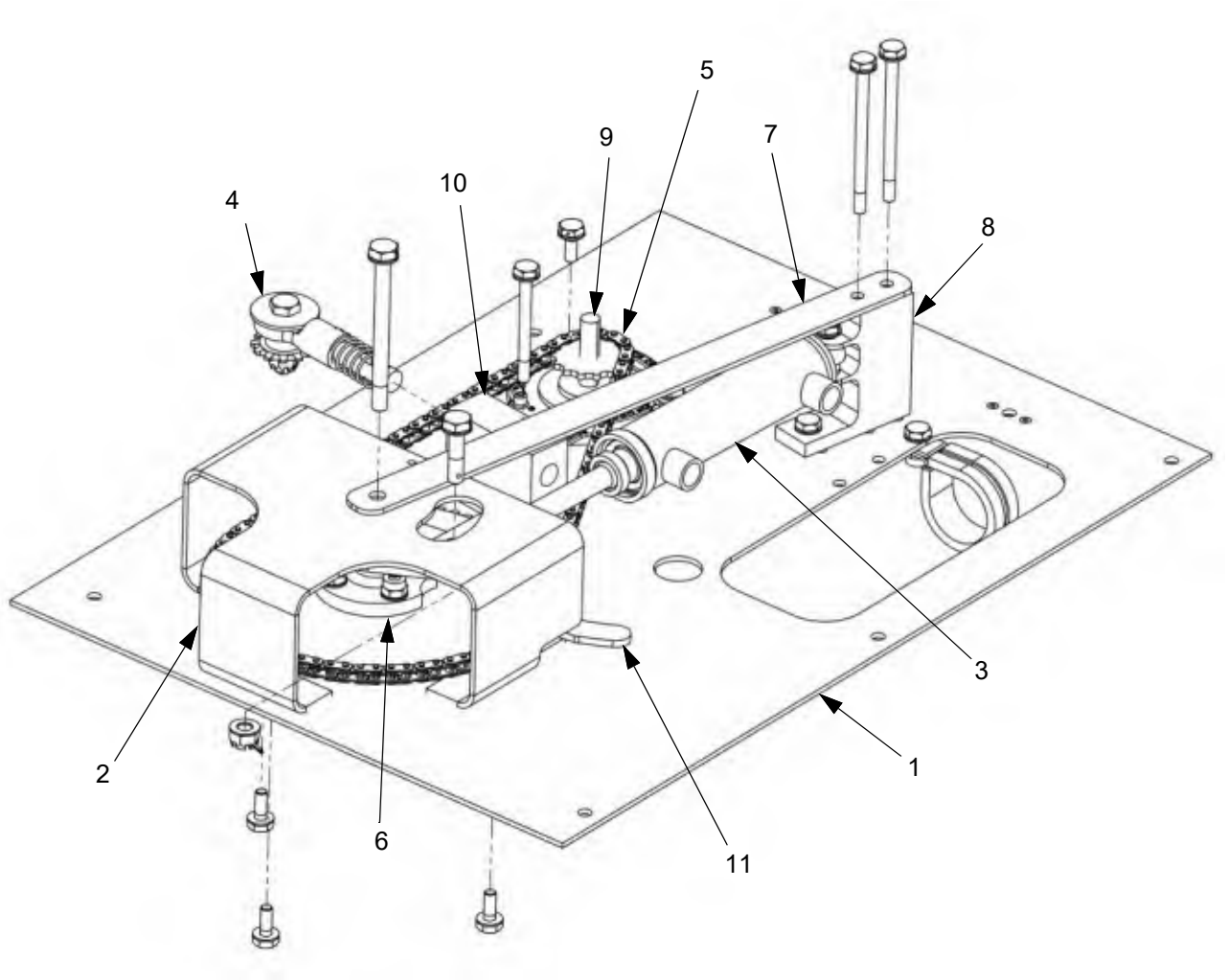

LEGEND

1. Floor Mount
2. Bellcrank Support
3. Master Cylinder
4. Chain Tensioner
5. Chain
6. Bellcrank
7. Master Cylinder Support
8. Master Cylinder Mount
9. GSA87 Servo
10. Chain Tensioner Housing
11. Stop Arm

J. Wheel Speed Sensors (K014, K086 and On)

(1) Removal

(a) Set the BATT 1 and BATT 2 switches to off.

(b) Open and collar the AUTO BRAKE circuit breaker.

(c) Remove the wing tunnel gear well panels (refer to Chapter 57-10).

(d) Disconnect the electrical connector.

(e) Remove safety wire.

(f) Remove the ourboard jam nut and washer.

(g) Remove the wheel speed sensor.

(2) Installation

(a) With the inboard jam nut and washer installed on the sensor, put the sensor into the mounting bracket.

(b) Install the outboard washer and jam nut loosely.

(c) Adjust the gap between the sensor face and the inner face of the wheel key-way tab to 0.100±0.020.

(d) Snug the jam nuts.

(e) Connect the electrical connector.

(f) Close the AUTO BRAKE circuit breaker.

(g) Perform the wheel speed sensor operational check (refer to Chapter 32-40).

(h) Torque inner and outer jam nuts to 40-60 in-lbs and install safety wire.

(i) Install the wing tunnel gear well panels (refer to Chapter 57-10).

(3) Adjustment

(a) Adjust the gap between the sensor face and the inner face of the wheel key-way tab to 0.100” ±0.020”.

(4) Inspection

(a) Inspect for condition and security.

(5) Operational Check

(a) Make sure the AUTO BRAKE circuit breaker is closed.

(b) Place the G1000 NXI system into Configuration Mode.

(c) To enter Configuration Mode:

(i) Pull the circuit breaker for all 3 displays (PFD 1, PFD 2, MFD).

(ii) While holding the ENT key on each display restore power by closing the circuit breaker.

(iii) When the words INTIALIZING SYSTEM appear release the ENT key.

(d) Using the FMS knob, navigate to the GEA tab on the PFD.

(e) Scroll to *Digital In*

(f) Verify validity for *EAU WHEEL SPEED L* and *EAU WHEEL SPEED R* are both green.

(g) Rotate the left wheel and verify the value changes.

(h) Rotate the right wheel and verify the value changes.

Figure 32-40.7: Wheel Speed Sensor

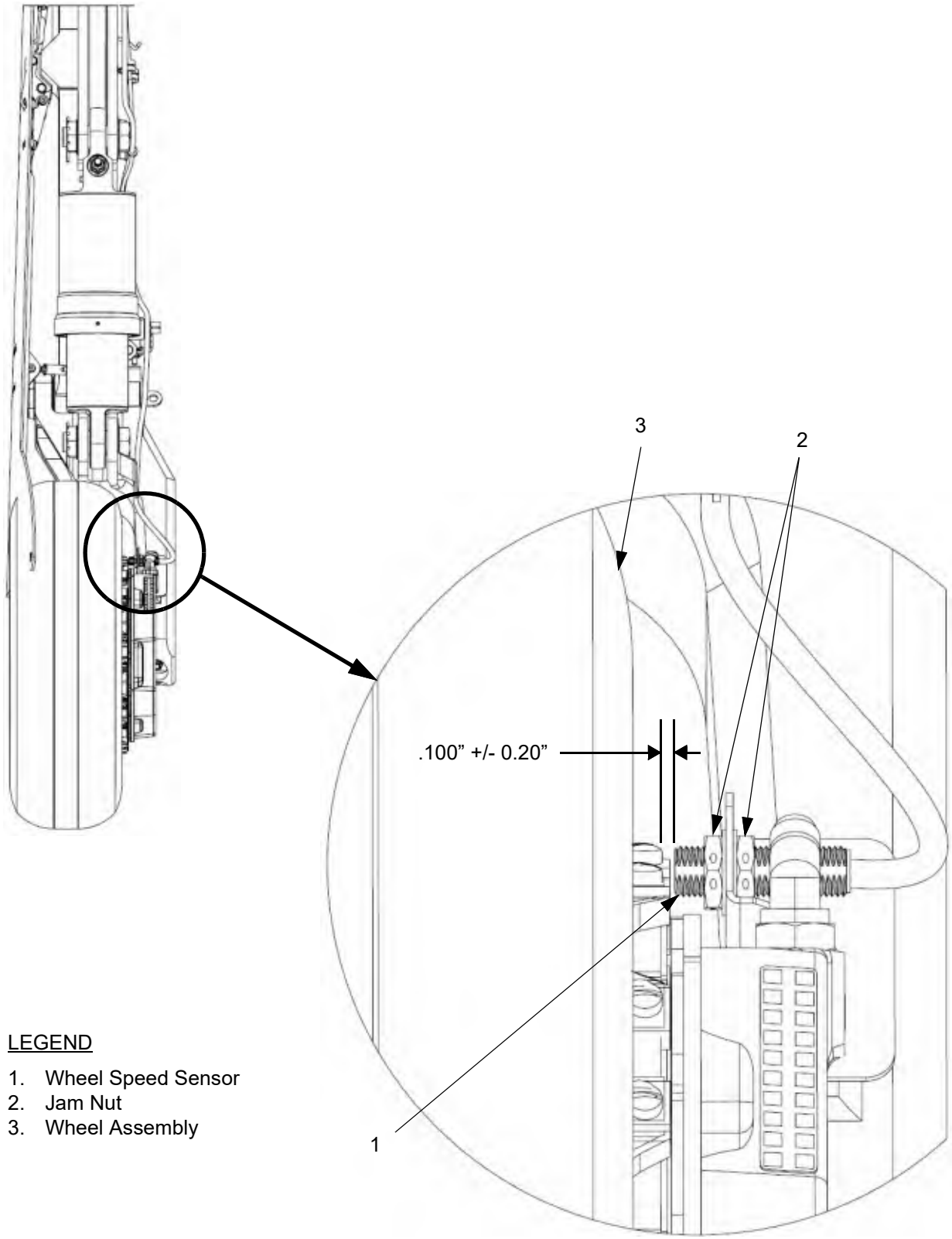

LEGEND

1. Wheel Speed Sensor
2. Jam Nut
3. Wheel Assembly

STEERING

1. Description

On-ground steering of the airplane is done using rudder pedal input to control the steering system and by use of differential braking.

The steering system consists of an articulated steering push-rod, connected to the rudder torque tube, that passes through a linear bearing on the firewall. The steering push-rod connects to a bell-crank mounted on the copilot's side of the engine mount at the nose landing gear. The bellcrank connects the steering push-rod to the steering kickout assembly through the steering vibration isolator. The vibration isolator dampens steering feedback felt at the rudder pedals.

Rudder pedal input rotates the steering kickout assembly causing the kickout arms to contact the steering arm assembly mounted to the top of the nose landing gear, turning the nose wheel. The kickout arms contact the steering arm assembly through replaceable contact plates. The contact plate rotational position can be adjusted with shims to give the correct feel at the rudder pedals. Rudder pedal input provides 16° +/-5° of steering.

When the turning limits of the steering system are exceeded using differential braking or towing the airplane, the kickout arms are forced to pivot outward by the breakout plate and disengage from the steering kickout assembly. The breakout plate is bolted to the engine mount to hold it in a fixed position. The kickout arms moving outward allows for a wider degree of nose wheel rotation. When the nose wheel is returned to center, springs force the kickout arms re-engage with the steering kickout assembly.

Total nose wheel rotation is limited to 60° on either side of center, totaling 120° of rotation. Exceeding 60° of nose wheel rotation in either direction will damage steering components.

2. Maintenance Practices

A. Steering Kickout Assembly

(1) Removal

(a) Raise the airplane using aircraft jacks (refer to Chapter 7-10). Ensure there is adequate clearance from the ground to retract the landing gear.

(b) Remove the airplane belly panels as needed to access the hydraulic reservoir (refer to Chapter 57-10).

(c) Remove the engine cowls (refer to Chapter 71-10).

(d) Connect a ground power unit to the airplane (refer to Chapter 24-40).

(e) Connect a hydraulic service cart Hydraulic Service Cart (MIL-PRF-83282 or MIL-PRF-87257, 2500 psi, 3.5 gpm capacity) to the hydraulic system through the pressure and suction disconnect ports on the reservoir.

(f) Set the BATT 1 and BATT 2 switches to ON.

(g) Turn on the hydraulic service cart.

Note: The airplane hydraulic system should build pressure until the actuators are pressurized and the accumulator is charged. Watch the pressure gauge on the hydraulic service cart to verify the buildup of pressure and the shifting of the re-circulation valve (pressure should build to approximately 2500 psi then drop off to less than 100 psi when the system shifts into re-circulation mode).

(h) Retract the landing gear until there is adequate clearance to remove the kickout assembly.

Note: Shut off the hydraulic service cart to stop motion of the landing gear midway between retraction or extension.

(i) Remove the cotter pin, castellated nut, washers, and bolt that attach the vibration isolator to the steering kickout assembly.

(j) Remove the safety wire, then remove the (2) bolts and washers that attach the steering kickout assembly to the support tubes on the engine mount.

(k) Remove the cotter pin, castellated nut, and washers that attach the kickout steering assembly to the upper steering support on the engine mount.

(l) Remove the steering kickout assembly.

(2) Installation

(a) Put the steering kickout assembly in position on the engine mount.

(b) Install the washers and castellated nut that attach the kickout steering assembly to the upper steering support on the engine mount. Torque the nut and install the cotter pin. If needed, advance the nut to the next castellation to install the cotter pin.

(c) Install the (2) washers and bolts that attach the steering kickout assembly to the support tubes on the engine mount. Torque the bolts and install safety wire.

(d) Install the bolt, washers, and castellated nut that attach the vibration isolator to the steering kickout assembly. Torque the nut and install the cotter pin. If needed, advance the nut to the next castellation to install the cotter pin.

(e) Apply a thin layer of Aeroshell 64 to the contact surfaces of the contact plates and kickout arms.

(f) Set the BATT 1 and BATT 2 switches to ON.

(g) Turn on the hydraulic service cart.

Note: The airplane hydraulic system should build pressure until the actuators are pressurized and the accumulator is charged. Watch the pressure gauge on the hydraulic service cart to verify the buildup of pressure and the shifting of the re-circulation valve (pressure should build to approximately 2500 psi then drop off to less than 100 psi when the system shifts into re-circulation mode).

(h) Put the landing gear in the landing gear control switch in the DOWN position. Make sure the down and locked indications are present on the MFD.

(i) Turn the hydraulic service cart off.

(j) Set the BATT 1 and BATT 2 switches to off.

(k) Disconnect then remove the hydraulic service cart.

(l) Disconnect external electrical power from the airplane (refer to Chapter 24-40).

(m) Install the airplane belly panel (refer to Chapter 57-10).

(n) Place a grease plate below the nose wheel and lower the airplane and remove the jacks (Chapter 7-10).

(o) Measure the gap between the kickout arms and contact plates. The gap (sum total between the left and right sides) must not exceed 0.030”. Do the adjustment procedure as needed to achieve the correct gap, refer to 32-50.2.G.

(p) Use a jack handle or similar inserted into the nose wheel axle to cycle the nose wheel side-to-side. Make sure each kickout arm disengages smoothly when actuated by the breakout plate and re-engages when the nose wheel is brought back to center.

(q) Install the engine cowls (refer to Chapter 71-10).

B. Kickout Arms

The kickout arms can be removed without removal of the entire steering kickout assembly. If the arms are replaced the contact plates must be replaced as well.

(1) Removal

(a) Raise the airplane using aircraft jacks (Chapter 7-10). Make sure the nose tire is clear of the ground.

(b) Set the BATT 1 and BATT 2 switches to off.

(c) Remove external power from the airplane (refer to Chapter 24-40).

(d) Compress the kickout arm springs using wedges.

(e) Remove the cotter pin, castellated nut, washers, and bolt attaching the arm to the steering kickout assembly then remove the arm.

(2) Installation

(a) Put the kickout arm in position on the steering kickout assembly.

(b) Install the bolt, washers, and castellated nut that attach the kickout arm to the steering kickout assembly. Torque the nut to 50 in-lbs and install the cotter pin. If needed, advance the nut to the next castellation to install the cotter pin. Do not exceed 70 in-lbs.

(c) Apply a thin layer of Aeroshell 64 to the contact surfaces of the contact plates and kickout arms.

(d) Remove the wedges compressing the kickout arm springs.

(e) Place a grease plate below the nose wheel then lower the airplane and remove the jacks (Chapter 7-10).

(f) Measure the gap between the kickout arms and contact plates. The gap (sum total between the left and right sides) must not exceed 0.030". Do the adjustment procedure as needed to achieve the correct gap, refer to 32-50.2.G.

(g) Use a jack handle or similar inserted into the nose wheel axle to cycle the nose wheel side-to-side. Make sure each kickout arm disengages smoothly when actuated by the breakout plate and re-engages when the nose wheel is brought back to center.

C. Steering Arm Assembly

The contact plates can be removed without removal of the entire steering arm assembly. If the contact plates are replaced the kickout arms must be replaced as well.

(1) Removal

(a) Raise the airplane using aircraft jacks (Chapter 7-10). Make sure the nose tire is clear of the ground.

(b) Remove the engine cowls (refer to Chapter 71-10).

(c) Remove the airplane belly panels (refer to Chapter 57-10).

(d) Connect a ground power unit to the airplane (refer to Chapter 24-40).

(e) Connect a hydraulic service cart Hydraulic Service Cart (MIL-PRF-83282 or MIL-PRF-87257, 2500 psi, 3.5 gpm capacity) to the hydraulic system through the pressure and suction disconnect ports on the reservoir.

(f) Set the BATT 1 and BATT 2 switches to ON.

(g) Turn on the hydraulic service cart.

Note: The airplane hydraulic system should build pressure until the actuators are pressurized and the accumulator is charged. Watch the pressure gauge on the hydraulic service cart to verify the buildup of pressure and the shifting of the re-circulation valve (pressure should build to approximately 2500 psi then drop off to less than 100 psi when the system shifts into re-circulation mode).

(h) Retract the landing gear until there is adequate clearance to remove the steering arm assembly.

Note: Shut off the hydraulic service cart to stop motion of the landing gear midway between retraction or extension.

(i) Remove the cotter pin, castellated nut, and washer attaching the steering arm assembly to the top of the nose gear.

(j) Remove the steering arm assembly.

(2) Installation

(a) Put the steering arm assembly in position on top of the nose landing gear. Make sure the arm is oriented forward.

(b) Install the washer and castellated nut that attach the steering arm assembly to the nose landing gear.

(c) Torque the nut to 600 in-lbs and install the cotter pin. If needed, advance the nut to the next castellation to install the cotter pin. Do not exceed 780 in-lbs.

(d) Apply a thin layer of Aeroshell 64 to the contact surfaces of the contact plates and kickout arms.

(e) Set the BATT 1 and BATT 2 switches to ON.

(f) Turn on the hydraulic service cart.

Note: The airplane hydraulic system should build pressure until the actuators are pressurized and the accumulator is charged. Watch the pressure gauge on the hydraulic service cart to verify the buildup of pressure and the shifting of the re-circulation valve (pressure should build to approximately 2500 psi then drop off to less than 100 psi when the system shifts into re-circulation mode).

(g) Put the landing gear in the landing gear control switch in the DOWN position. Make sure the down and locked indications are present on the MFD.

(h) Turn the hydraulic service cart off.

(i) Set the BATT 1 and BATT 2 switches to off.

(j) Disconnect the hydraulic service cart.

(k) Disconnect external electrical power from the airplane (refer to Chapter 24-40).

(l) Install the airplane belly panel (refer to Chapter 57-10).

(m) Place a grease plate below the nose wheel then lower the airplane and remove the jacks (Chapter 7-10).

(n) Measure the gap between the kickout arms and contact plates. The gap (sum total between the left and right sides) must not exceed 0.030”. Do the adjustment procedure as needed to achieve the correct gap, refer to 32-50.2.G.

(o) Use a jack handle or similar inserted into the nose wheel axle to cycle the nose wheel side-to-side. Make sure each kickout arm disengages smoothly when actuated by the breakout plate and re-engages when the nose wheel is brought back to center.

(p) Install the engine cowls (refer to Chapter 71-10).

D. Contact Plates

The contact plates can be removed without removal of the entire steering arm assembly. If the contact plates are replaced the kickout arms must be replaced as well.

(1) Removal

(a) Set the BATT 1 and BATT 2 switches to off.

(b) Remove external power from the airplane (refer to Chapter 24-40).

(c) Raise the airplane using aircraft jacks (Chapter 7-10). Make sure the nose tire is clear of the ground.

(d) Compress the kickout arm spring using a wedge to disengage the kickout arm.

(e) Make note of the number and thickness of shims with each contact plate before removal.

(f) Remove the screws attaching the contact plate to the steering arm assembly then remove the contact plate and shims.

(2) Installation

(a) Apply Loctite™ 242 to the screw threads before installing the plates to the steering arm assembly.

(b) Put the contact plate in position on the steering arm assembly.

(c) Install the screws that attach the contact plate and shims to the steering arm assembly. Torque the screws to 20-25 in-lbs.

(d) Apply a thin layer of Aeroshell 64 to the contact surfaces of the contact plates and kickout arms.

(e) Remove the wedge compressing the assembly spring.

(f) Place a grease plate below the nose wheel then lower the airplane and remove the jacks (Chapter 7-10).

(g) Measure the gap between the kickout arms and contact plates. The gap (sum total between the left and right sides) must not exceed 0.030”.

(h) Do the adjustment procedure as needed to achieve the correct gap, see 32-50.2.G.

(i) Use a jack handle or similar inserted into the nose wheel axle to cycle the nose wheel side-to-side. Make sure each kickout arm disengages smoothly when actuated by the breakout plate and re-engages when the nose is wheel brought back to center.

E. Steering Push-Rod Assembly

(1) Removal

(a) Raise the airplane using aircraft jacks (refer to Chapter 7-10).

(b) Remove the engine cowls (refer to Chapter 71-10).

(c) Remove the crew seats (refer to Chapter 25-10).

(d) Remove cockpit floor panels 3LC and 2RC (refer to Chapter 6-00 and 53-20).

(e) Install the rig pin into the rudder bellcrank.

(f) Remove the cotter pin, castellated nut, washers, and bolt that attach the steering push-rod to the rudder torque tube.

(g) Remove the cotter pin, castellated nut, washers, and bolt that attach the steering push-rod to the bellcrank.

(h) Remove the nuts, washer, and bolts that attach the linear bearing to the firewall.

(i) Remove the firewall blanket plate around the steering push-rod and linear bearing on the forward side of the firewall (refer to Chapter 71-30).

(j) Remove the steering push-rod from the airplane by it pulling forward through the engine mount.

(2) Installation

(a) Apply PR-1995 to the firewall side of the mounting flange of the linear bearing.

(b) Put the steering push-rod in position by routing it though the engine mount and firewall, putting the linear bearing mounting flange against the firewall.

(c) Install the firewall blanket plate around the steering push-rod and linear bearing on the forward side of the firewall (refer to Chapter 71-30).

Note: The linear bearing flange is beneath the blanket, the bolts and washers install through and on top of blanket.

(d) Apply PR-1995 to the linear bearing mounting bolts.

(e) Install the (4) bolts, (8) washers, and (4) locknuts that attach the linear bearing to the firewall. Torque the nuts to 50-70 in-lbs. Wipe off excess sealant.

(f) Install the bolt, washers, and castellated nut that attach the steering push-rod to the rudder torque tube. Torque the nut to 50 in-lbs and install the cotter pin. If needed, advance the nut to the next castellation to install the cotter pin. Do not exceed 70 in-lbs.

(g) Install the bolt, washers, and castellated nut that attach the steering push-rod to the bellcrank. Torque the nut to 50 in-lbs and install the cotter pin. If needed, advance the nut to the next castellation to install the cotter pin. Do not exceed 70 in-lbs.

CAUTION: Failure to remove the rig pin will make the rudder and steering inoperable.

(h) Remove the rig pin from the rudder bellcrank.

(i) Make sure the nose wheel is centered (0° +/- 2°) with the aircraft centerline and the nose wheel centering device in the middle of the ramp on the octagon hub.

(j) Adjust the steering push-rod length so the gap between the left and right kickout arms and contact plates is equal. The gap (sum total between the left and right sides) must not exceed 0.030".

Note: The threads on the aft end of the steering push-rod are left-hand thread letting the length of the steering push-rod be increased or decreased by rotating the body of the steering push-rod without disconnecting the rod ends from the rudder torque tube and/or the bellcrank.

(k) Verify the witness holes on the steering push-rod are blocked with threads.

(l) Torque the jam nuts and install safety wire.

(m) Using the rudder pedals, cycle the steering side-to-side through its full travel and make sure it is smooth with no binding.

(n) Install cockpit floor panels 3LC and 2RC (refer to Chapter 6-00 and 53-20).

(o) Install the crew seats (refer to Chapter 25-10).

(p) Install the engine cowls (refer to Chapter 71-10).

(q) Lower the airplane and remove the aircraft jacks (refer to Chapter 7-10).

F. Steering Vibration Isolator

(1) Removal

(a) Raise the airplane using aircraft jacks (refer to Chapter 7-10).

(b) Remove the engine cowls (refer to Chapter 71-10).

(c) Remove the pilot's seat (refer to Chapter 25-10).

(d) Remove pilot's floor panel 3LC (refer to Chapter 6-00 and 53-20).

(e) Install the rig pin into the rudder bellcrank.

(f) Remove the cotter pin, castellated nut, washers, and bolt that attach the steering vibration isolator to the kickout arm assembly.

(g) Remove the cotter pin, castellated nut, washers, and bolt that attach the steering vibration isolator to the bellcrank.

(h) Remove the steering vibration isolator from the airplane.

(2) Installation

(a) Put the steering vibration isolator in position on the bellcrank and kickout assembly.

(b) Install the bolt, washers, and castellated nut that attach the steering vibration isolator to the kickout arm assembly. Torque the nut to 50 in-lbs and install the cotter pin. If needed, advance the nut to the next castellation to install the cotter pin. Do not exceed 70 in-lbs.

(c) Install the bolt, washers, and castellated nut that attach the steering vibration isolator to the bellcrank. Torque the nut to 50 in-lbs and install the cotter pin. If needed, advance the nut to the next castellation to install the cotter pin. Do not exceed 70 in-lbs.

CAUTION: Failure to remove the rig pin will make the rudder and steering inoperable.

(d) Remove the rig pin from the rudder bellcrank.

(e) Make sure the nose wheel is centered (0° +/- 2°) with the aircraft centerline and the nose wheel centering device in the middle of the ramp on the octagon hub.

(f) Adjust the vibration isolator length so the gap between the left and right kickout arms and contact plates is equal. The gap (sum total between the left and right sides) must not exceed 0.030".

Note: The threads on the clevis are reverse threaded letting the length of the vibration isolator be increased or decreased by rotating the body of the vibration isolator without disconnecting the clevis or the rod end from the kickout assembly and/or the bellcrank.

(g) Verify the witness holes on the steering vibration isolator rod are blocked with threads.

(h) Torque the jam nuts and install safety wire.

(i) Using the rudder pedals, cycle the steering side-to-side through it's full travel and make sure it is smooth with no binding

(j) Install pilot's floor panel 3LC (refer to Chapter 6-00 and 53-20).

(k) Install the pilot's seat (refer to Chapter 25-10).

(l) Install the engine cowls (refer to Chapter 71-10).

(m) Lower the airplane and remove the aircraft jacks (refer to Chapter 7-10).

(n) Install the engine cowls (refer to Chapter 71-10).

Figure 32-50.1: Steering System (Sheet 1 of 5)

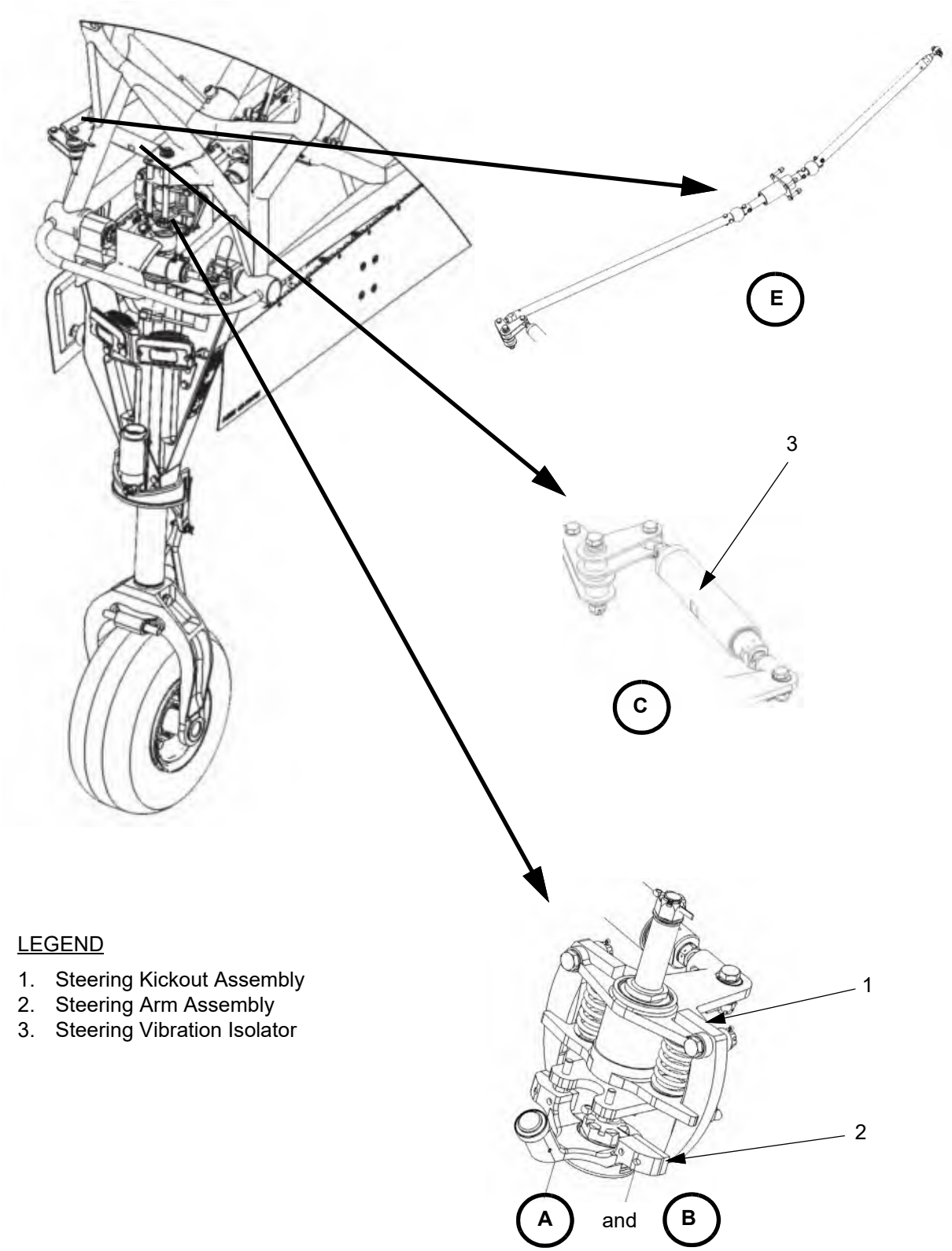

LEGEND

1. Steering Kickout Assembly
2. Steering Arm Assembly
3. Steering Vibration Isolator

Figure 32-50.1: Steering System (Sheet 2 of 5)

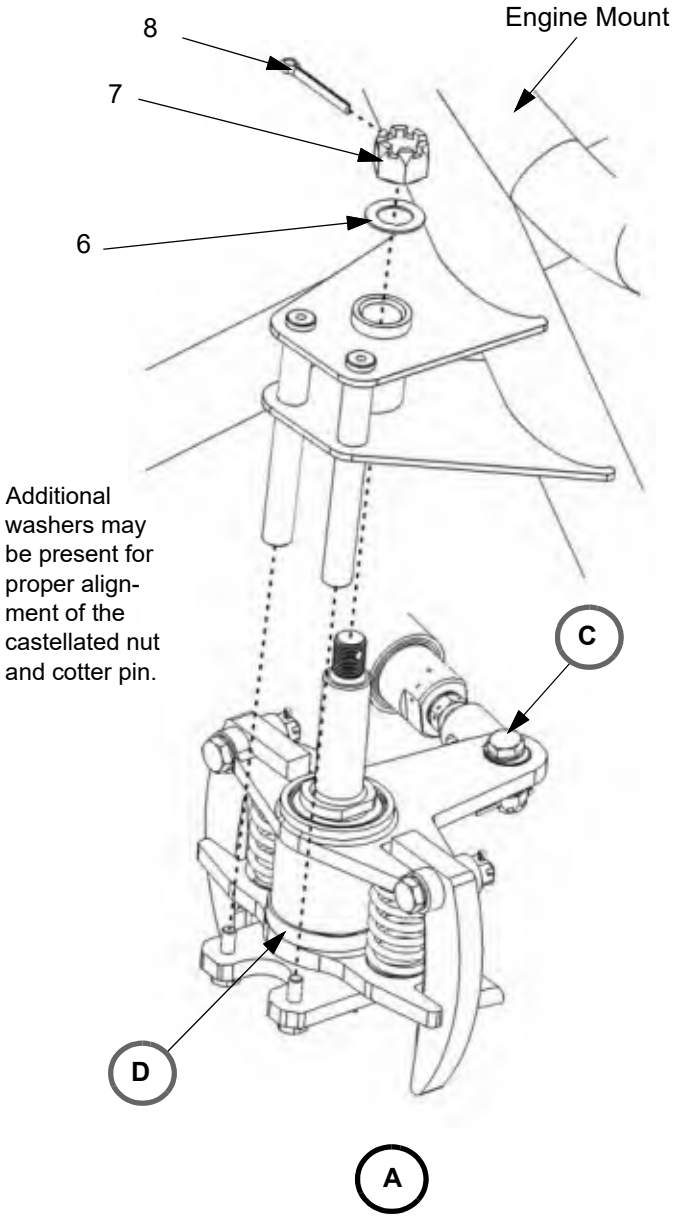

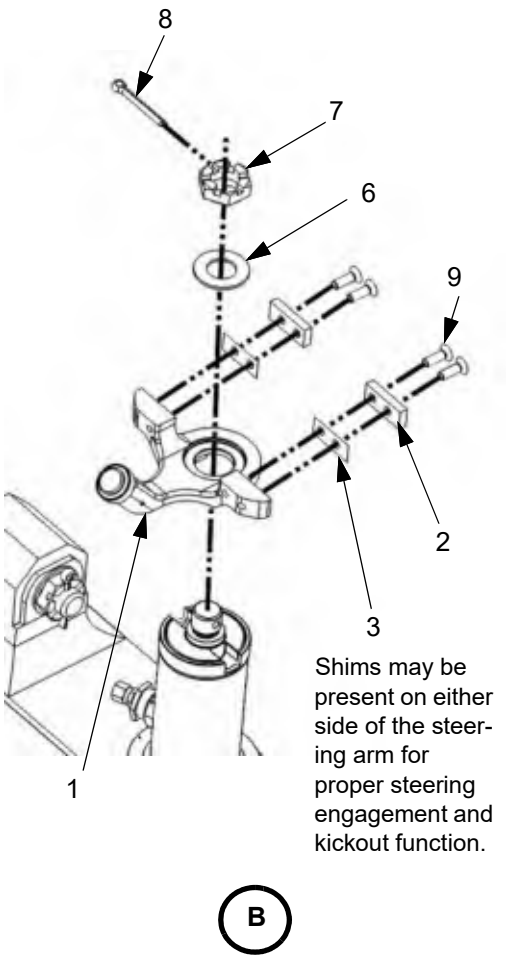

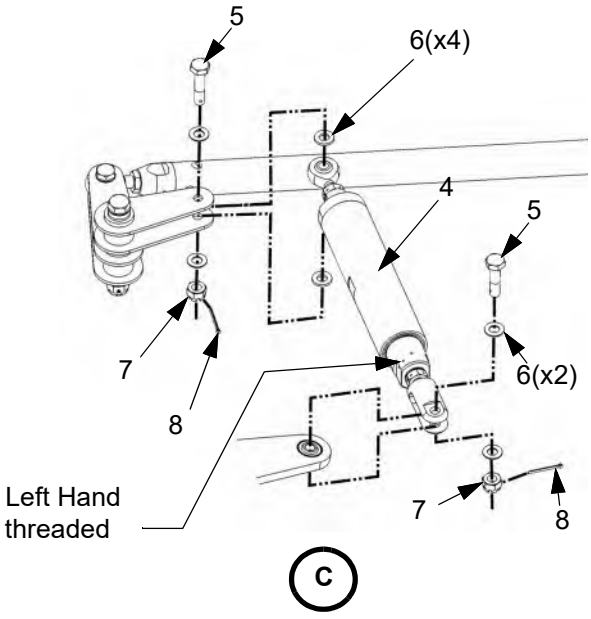

LEGEND

1. Steering Arm Assembly
2. Contact Plate
3. Shim
4. Steering Vibration Isolator
5. Bolt
6. Washer
7. Castellated Nut
8. Cotter Pin
9. Screw

Figure 32-50.1: Steering System (Sheet 3 of 5)

LEGEND

1. Kickout Body Weldment Assy
2. Main Shaft
3. Breakout Plate
4. Kickout Arm
5. Breakout Plate Spacer
6. Kickout Spring
7. Kickout Spring Cap
8. Bolt
9. Washer
10. Castellated Nut
11. Cotter Pin

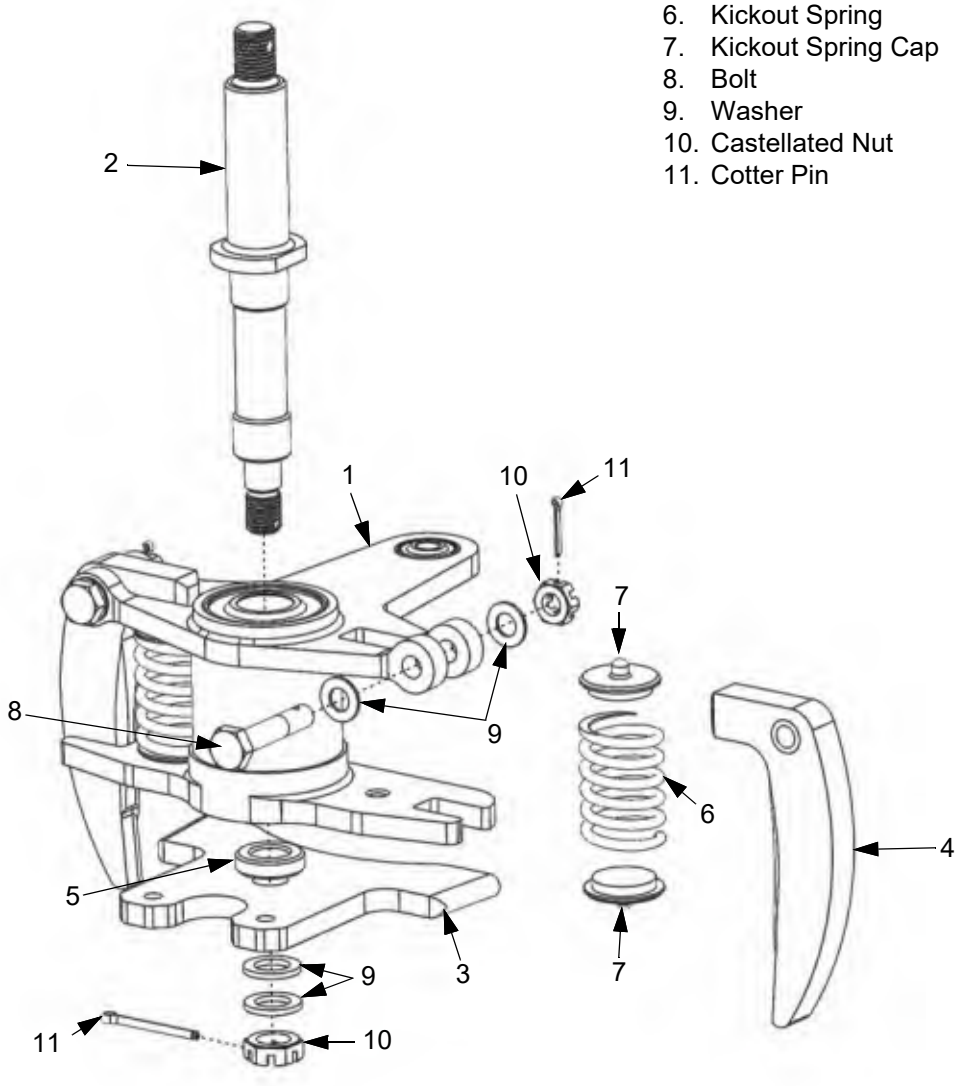

Figure 32-50.1: Steering System (Sheet 4 of 5)

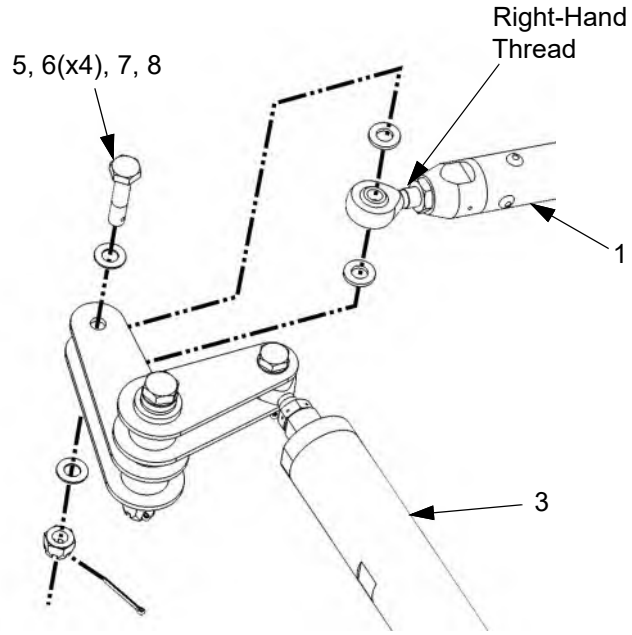

E1

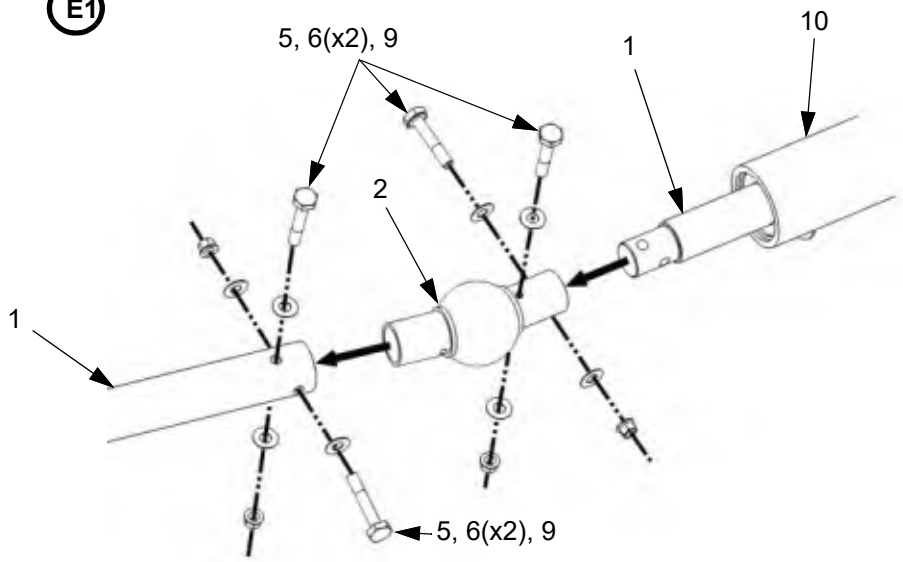

E2

LEGEND

1. Steering Push-Rod
2. Universal Joint
3. Steering Vibration Isolator
4. Bellcrank
5. Bolt
6. Washer
7. Castellated Nut
8. Cotter Pin
9. Locknut
10. Linear Bearing

Figure 32-50.1: Steering System (Sheet 5 of 5)

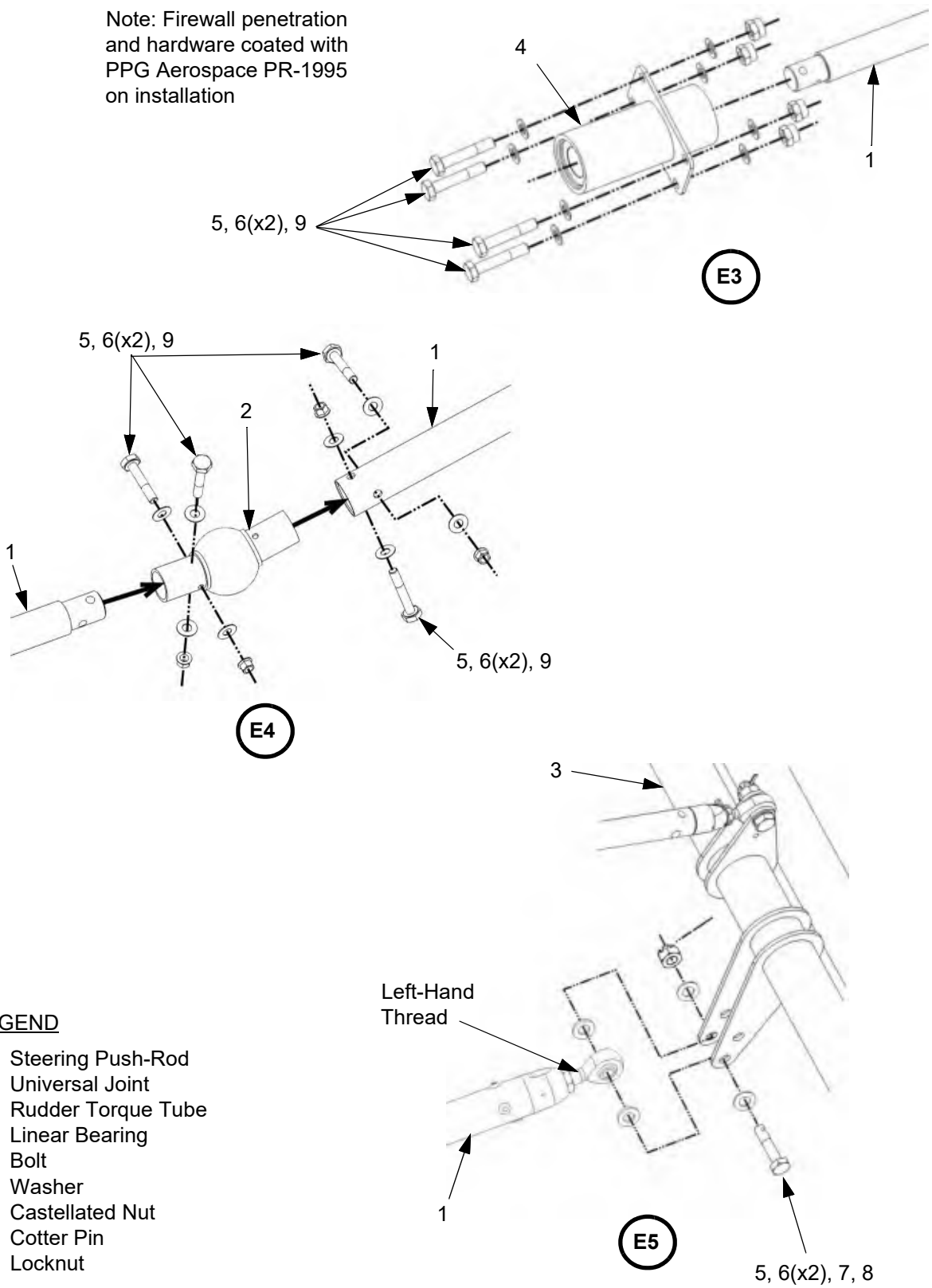

LEGEND

1. Steering Push-Rod
2. Universal Joint
3. Rudder Torque Tube
4. Linear Bearing
5. Bolt
6. Washer
7. Castellated Nut
8. Cotter Pin
9. Locknut

G. Adjustment

(1) Make sure the rudder is correctly rigged (refer to Chapter 27-20).

(2) Raise the airplane using aircraft jacks (refer to Chapter 7-10). Make sure there is adequate clearance from the ground to turn the nose wheel.

(3) Remove the engine cowling (refer to Chapter 71-10).

(4) Remove the pilot's seat (refer to Chapter 25-10).

(5) Remove pilot's floor panel 3LC (refer to Chapter 6-00 and 53-20).

(6) Install a rig pin into the rudder bellcrank.

(7) Loosen the jam nuts on the rod ends of the steering push-rod and steering vibration isolator.

(8) Make sure the nose wheel centering device is centered in the middle of the ramp on the octagon hub.

(9) Adjust the length of the steering vibration isolator and/or the steering push-rod as needed so the kickout arms are equal distance from the contact plates on the steering arm assembly.

Note: The threads on the clevis of the steering vibration isolator and the aft rod end of the steering push-rod are left-hand thread. This lets the length of the steering vibration isolator and the steering push-rod be increased or decreased by rotating the body of each without disconnecting them.

(10) Verify the gap between the kickout arms and contact plates as follows:

(a) Snug the jam nuts on the steering vibration isolator and steering push-rod to prevent inadvertent movement.

(b) With a grease plate under the nose wheel, lower the aircraft to a weight-on-wheels configuration.

(c) Measure the gap between the kickout arms and contact plates. The gap (sum total between the left and right sides) must not exceed 0.030".

(d) Replace the shims behind the contact plates as needed to achieve the correct gap.

Note: If possible, shim stack thickness should be equal behind each contact plate.

Note: Shims are available in 4 thicknesses, 0.019" (PK32203004), 0.031" (PK32203005), 0.048" (PK32203006), 0.090" (PK32203007).

(11) Check the operation of the kickout assembly as follows:

(a) With the grease plate under the nose wheel, use a jack handle or similar inserted into the nose wheel axle to cycle the nose wheel side-to-side.

(b) Make sure each kickout arm disengages smoothly when actuated by the breakout plate and re-engages when the nose wheel is brought back to center.

(c) If a kickout arm does not disengage smoothly, the outboard radius of the contact plate can be increased as follows:

(i) Remove the contact plate (refer to 32-50.2.D).

(ii) The outboard radius on the contact plate can be increased using a file or other mechanical means from it's initial radius of 0.022" to a maximum of 0.25".

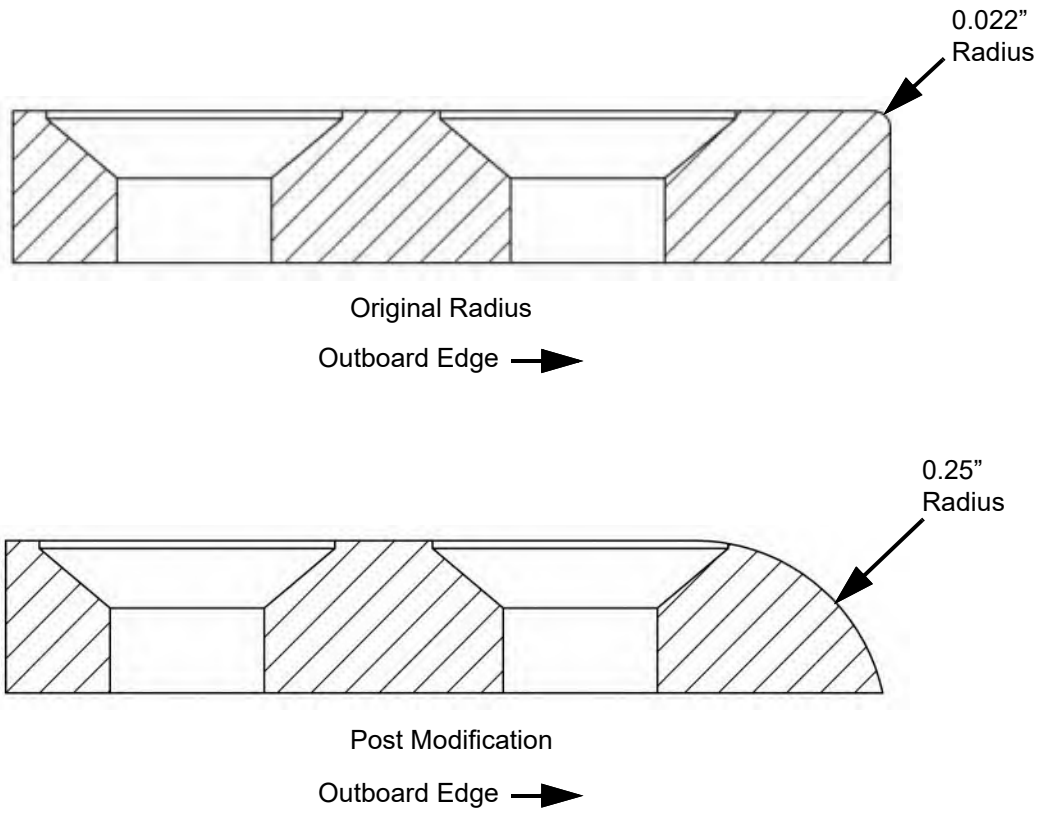

(iii) Install the contact plate (refer to 32-50.2.D).

(iv) Apply a thin layer of Aeroshell 64 to the contact plates and kickout arms.

(v) Perform the operational check again and verify smooth operation of the kickout assembly.

(12) Make sure all witness holes are blocked with threads.

(13) Torque all jam nuts and install safety wire.

CAUTION: Failure to remove the rig pin will make the rudder and steering inoperable.

(14) Verify there is no binding on the rig pin then remove the pin from the rudder bellcrank.

Note: The rig pin must turn freely in the rig pin hole with no binding when the cables are tensioned to the specified value. Binding on the rig pin indicates unbalanced tension in the cables. Adjust cable tension as required.

(15) Verify correct operation of the rudder and the nose wheel steering system.

(16) Install pilot's floor panel 3LC (refer to Chapter 6-00 and 53-20). Remove the pilot's seat (refer to Chapter 25-10).

(17) Install the pilot's seat (refer to Chapter 25-10).

(18) Make sure the landing gear are down and locked then lower airplane and remove the jacks (refer to Chapter 7-10).

H. Inspection

(1) Raise the airplane using aircraft jacks (refer to Chapter 7-10). Make sure there is adequate clearance from the ground to turn the nose wheel.

(2) Clean the steering system as needed (refer to Chapter 12-20).

(3) Inspect all components of the steering system for security and damage, including but not limited to cracks, distortion, and corrosion.

(4) Verify the nose wheel centering device operates smoothly and returns to center when cycled to each side and released.

(5) Inspect the kickout arms, breakout plate, and steering arm contact pads for wear and damage. Replace kickout arms or contact pads with excessive wear. Replace the breakout plate if the base metal is visible.

(6) Place a grease plate under the nose wheel and lower the airplane and remove the jacks (refer to Chapter 7-10).

(7) Using a jack handle or similar, cycle the nose gear right to left and make sure the kickout arms cycle smoothly when actuated by the breakout plate.

(8) Inspect the steering push-rod assembly, including universal joints, linear bearing, and rod ends for damage and cracks. Replace any universal joint that is damaged or shows excessive wear.

(9) Inspect the steering vibration isolator for function and condition. The steering vibration isolator requires no servicing.

This Page Intentionally Left Blank

POSITIONING, WARNING, AND GROUND SAFETY SWITCH

1. Description

The position of the landing gear is monitored and reported to the cockpit using a system of electrical and electro-mechanical switches. Each landing gear actuator has an internal switch that turns on a green light when the gear is down and locked. When the gear are in motion, either retracting or extending, red lights come on. A switch at each main gear uplock and a switch on the engine mount turn off the red lights when the gear are fully retracted. All of these switches turn on or turn off notification lights only, they have no control over the hydraulic system.

An audible warning activates when the flaps are extended for landing or the power lever is decreased if the landing gear has not been extended.

There is a Weight on Wheels switch on each of the main landing gear that prevents the landing gear from being retracted when the airplane is on the ground.

The left and right landing gear wheels are equipped with speed sensors that track ferrous metal targets to determine when the aircraft has touched down. As the wheels begin to spin, the sensor transmits a digital signal to the Garmin Integrated Flight Deck (GIFD).

2. Maintenance Practices

A. Up Switch

(1) Removal

(a) Raise the airplane using aircraft jacks.

(b) Install a tail stand.

(c) Set the BATT 1 and BATT 2 switches to OFF.

(d) Disconnect the electrical harness from the switch.

(e) Remove the nut attaching the switch to the uplock or engine mount, as applicable.

(f) Remove the switch.

(2) Installation

(a) Installation is the reverse of removal.

(b) Remove the airplane belly panels (refer to Chapter 57-10).

(c) Connect a ground power unit to the airplane (refer to Chapter 24-40).

(d) Connect a hydraulic service cart to the hydraulic system through the pressure and suction disconnect ports on the reservoir.

(e) Connect shop air to the air quick disconnect on the reservoir.

(f) Turn ON the hydraulic service cart. The airplane hydraulic system should build pressure until the actuators are pressurized and the accumulator is charged. Watch the pressure gauge on the hydraulic service cart to verify the buildup of pressure and the shifting of the re-circulation valve (pressure should build to approximately 2500 psi then drop off to less than 100 psi when the system shifts into re-circulation mode).

(g) Verify the condition and security of the hoses and fittings.

(h) Do a minimum of three retractions and extensions of the gear to verify operation of the switch.

(i) Ensure the landing gear is down and locked then remove the tail stand and lower the airplane.

(j) Disconnect the shop air.

(k) Disconnect then remove the hydraulic service cart.

(l) Remove the tail stand then lower the airplane.

(m) Disconnect external electrical power from the airplane (refer to Chapter 24-40).

(n) Install the airplane belly pane (refer to Chapter 57-10).

(o) Install safety wire.

(3) Adjustment

(a) Raise the airplane using aircraft jacks.

(b) Install a tail stand.

(c) Set the BATT 1 and BATT 2 switches to OFF.

(d) Connect a hydraulic service cart to the hydraulic system through the pressure and suction disconnect ports on the reservoir.

(e) Connect a ground power unit to the airplane (refer to Chapter 24-40).

(f) Connect shop air to the air quick disconnect on the reservoir.

(g) Turn "ON" the hydraulic service cart. The airplane hydraulic system should build pressure until the actuators are pressurized and the accumulator is charged. Watch the pressure gauge on the hydraulic service cart to verify the buildup of pressure and the shifting of the re-circulation valve (pressure should build to approximately 2500 psi then drop off to less than 100 psi when the system shifts into re-circulation mode).

(h) Verify the condition and security of the hoses and fittings.

(i) Do a retraction of the landing gear.

(j) Loosen the nuts on the switch.

(k) Increase or decrease the depth of the switch in its mount so the landing gear correctly activates the switch.

(l) Tighten the nuts.

(m) Do a minimum of 3 retractions and extensions of the gear to verify rigging and operation. Adjust the position of the switch as required.

(n) Install safety wire.

(o) Ensure the landing gear is down and locked then remove the tail stand and lower the airplane.

(p) Disconnect the shop air.

(q) Disconnect then remove the hydraulic service cart.

(r) Remove the tail stand then lower the airplane.

(s) Disconnect external electrical power from the airplane (refer to Chapter 24-40).

(t) Install the airplane belly panels (refer to Chapter 57-10).

(4) Inspection

(a) Inspect for condition and security.

(b) Verify switch contact with the retracted landing gear and correct function.

(c) The up switch requires no maintenance and should be replaced on condition.

Figure 32-60.1: Main and Nose Gear Up Switches

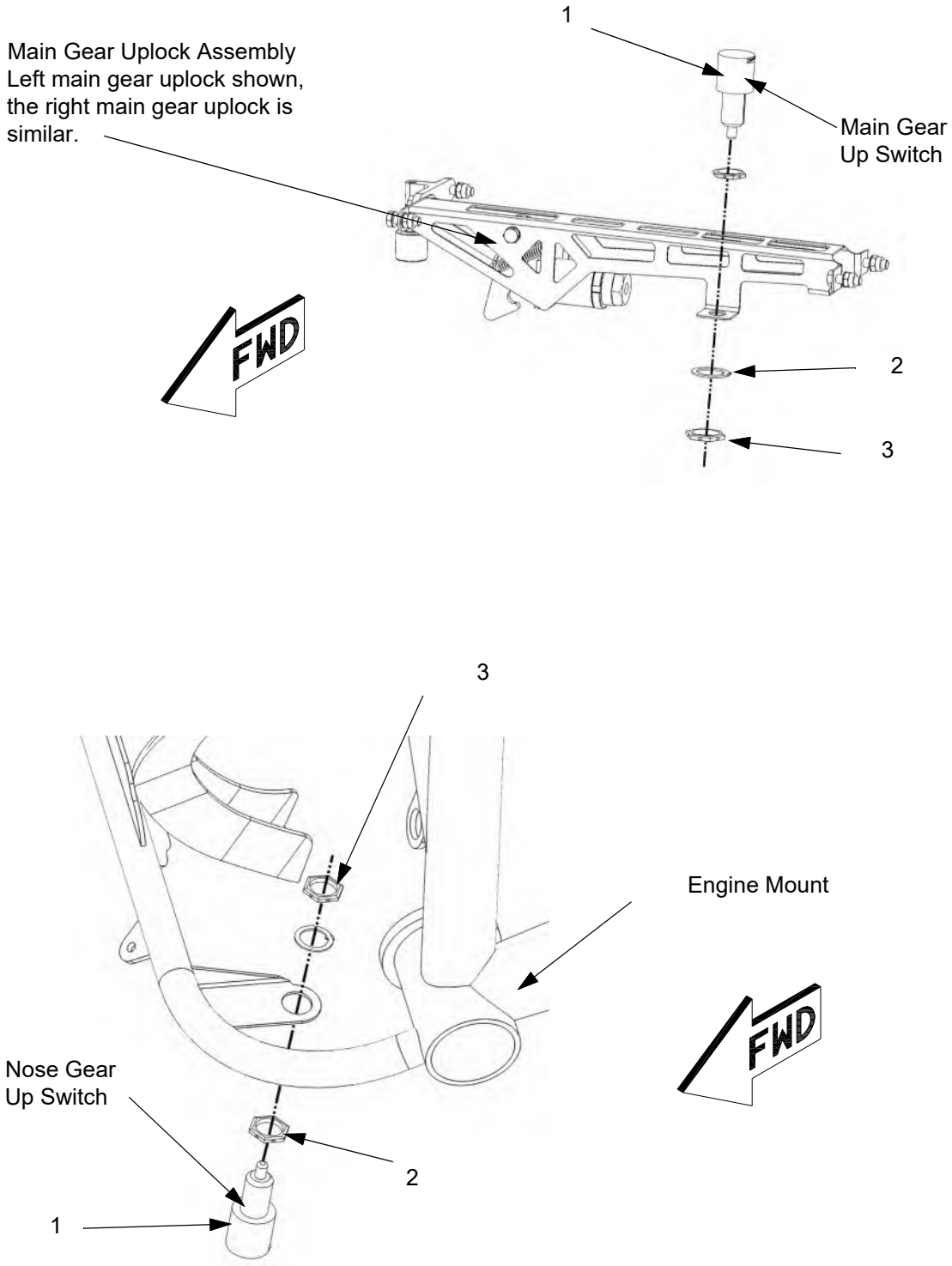

LEGEND
1. Up Switch
2. Washer
3. Nut

B. Weight on Wheels Switch

(1) Removal

(a) Set the BATT 1 and BATT 2 switches to off.

(b) Disconnect the electrical connector.

Note: SN: K014 and K086 and on, the WoW switch and wheel speed sensor share the same harness. Remove the sleeving from the harness and un-pin the WoW wiring from the electrical connector.

(c) Remove the safety wire.

(d) Remove the lower jam nut and keyed washer that attach the switch to the bracket.

(e) Remove the switch.

(2) Installation

(a) With the upper jam nut installed on the switch, put the switch in position on the bracket.

(b) Install the keyed washer so the keyway in the switch aligns with the keyway in the bracket.

(c) Install the lower jam nut.

Note: SN: K014 and K086 and on, the WoW switch and wheel speed sensor share the same harness. Pin the WoW wiring to the electrical connector and install the sleeving.

(d) Connect the electrical connector.

(e) Do the Adjustment procedure.

(3) Adjustment

(a) Raise the airplane on jacks (refer to Chapter 7-10).

(b) Remove the safety wire and loosen the jam nuts on the switch.

(c) Disconnect the electrical connector.

(d) Connect a calibrated multimeter to the connector pins as follows:

(i) SN: K003-K085 (excluding K014)

(1) For the right switch: Pins 1 and 2 of J445

(2) For the left switch: Pins 1 and 2 of J366

(ii) SN: K014 and K086 and ON

(1) For the right switch: Pins 1 and 2 of J762

(2) For the left switch: Pins 1 and 2 of J753

(e) With the switch plunger just touching the trailing arm, adjust the switch in the direction of the trailing arm until the switch is made.

Note: The switch should read continuity on the ground, and open in the air.

(f) Increase the depth of the switch an additional 1/2 turn of the nut beyond the point that the switch is made.

(g) Torque the jam nuts to 18 - 24 in-lbs and install safety wire.

(h) Remove the multimeter and connect the electrical connector.

(i) Lower the airplane and remove the jacks (refer to Chapter 7-10).

(j) Do the Operational Check.

(4) Inspection

(a) Inspect for condition and security.

(5) Operational Check - Aircraft On The Ground

Note: Perform this check on both switches when testing the system at the Annual inspection.

(a) Connect external electrical power to the airplane (refer to Chapter 24-40).

(b) Set the BATT 1 and BATT 2 switches to ON.

(c) Momentarily put the left or right lift transducer in the full up position. Make sure the stick shaker does not activate.

(d) Simulate weight-off-wheels of the switch being tested by using a tongue depressor or similar non-metallic object to actuate the switch.

(e) Momentarily put the left or right lift transducer in the full up position. Make sure the stick shaker activates.

(f) Set the BATT 1 and BATT 2 switches to off.

(g) Disconnect external electrical power from the airplane (refer to Chapter 24-40).

(6) Operational Check - Aircraft On Jacks

Note: Perform this check on any switch that is replaced or adjusted.

(a) Connect external electrical power to the airplane (refer to Chapter 24-40).

(b) Pull the L PITOT HEAT, R PITOT HEAT, L STALL HEAT, and R STALL HEAT circuit breakers.

(c) Set the BATT 1 and BATT 2 switches to ON.

(d) Momentarily put the left or right lift transducer in the full up position. Make sure the stick shaker activates.

Note: The shaker may activate without moving a lift transducer to the full up position. This also indicates a successful test.

(e) Set the BATT 1 and BATT 2 switches to off.

(f) Reset the L PITOT HEAT, R PITOT HEAT, L STALL HEAT, and R STALL HEAT circuit breakers.

(g) Disconnect external electrical power from the airplane (refer to Chapter 24-40).

Figure 32-60.2: Weight on Wheels Switch

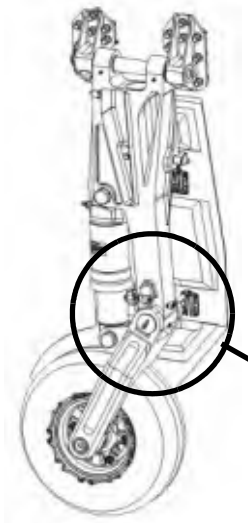

Left main gear shown,
right main gear opposite.

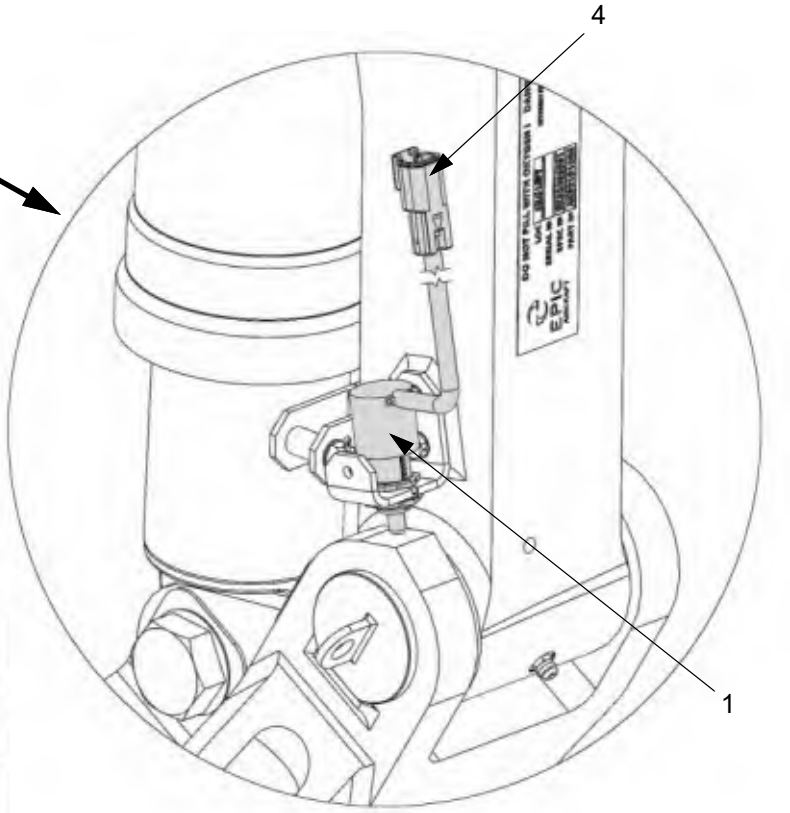

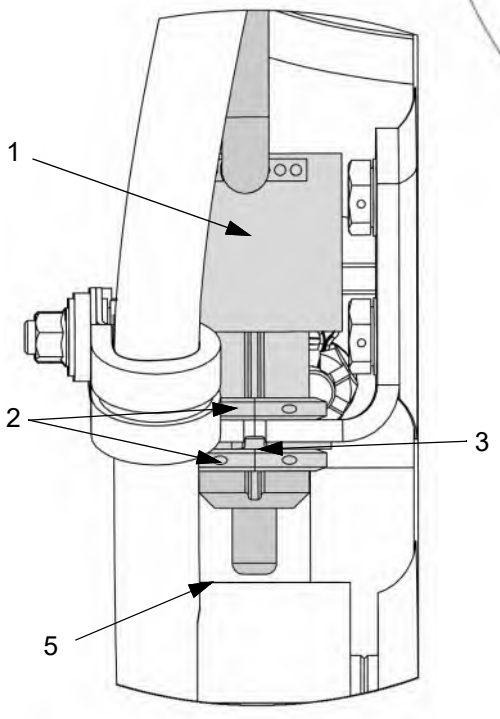

View looking aft.

LEGEND
1. Weight on Wheels Switch
2. Jam Nut
3. Keyed washer
4. Electrical Connector
5. Fork

This Page Intentionally Left Blank

CHAPTER
33

Lights

This Page Intentionally Left Blank

List of Effective Pages

Chapter/Section	Page Number	Effective Date
33-Title	Page 1	02 Jan 2020
33-Title	Page 2	02 Jan 2020
33-LOEP	Page 1	08 Sep 2026
33-LOEP	Page 2	13 Jul 2022
33-TOC	Page 1	08 Sep 2026
33-TOC	Page 2	02 Jan 2020
33-00	Page 1	13 Apr 2020
33-00	Page 2	02 Jan 2020
33-00	Page 3	02 Jan 2020
33-00	Page 4	02 Jan 2020
33-10	Page 1	02 Jan 2020
33-10	Page 2	08 Sep 2026
33-10	Page 3	02 Jan 2020
33-10	Page 4	08 Sep 2026
33-10	Page 5	02 Jan 2020
33-10	Page 6	02 Jan 2020
33-20	Page 1	02 Jan 2020
33-20	Page 2	08 Sep 2026
33-20	Page 3	02 Jan 2020
33-20	Page 4	08 Sep 2026
33-20	Page 5	08 Sep 2026
33-20	Page 6	08 Sep 2026
33-40	Page 1	08 Sep 2026
33-40	Page 2	08 Sep 2026
33-40	Page 3	08 Sep 2026
33-40	Page 4	08 Sep 2026
33-40	Page 5	08 Sep 2026
33-40	Page 6	08 Sep 2026
33-40	Page 7	08 Sep 2026
33-40	Page 8	08 Sep 2026
33-40	Page 9	08 Sep 2026
33-40	Page 10	08 Sep 2026
33-40	Page 11	08 Sep 2026
33-40	Page 12	08 Sep 2026
33-40	Page 13	08 Sep 2026
33-40	Page 14	08 Sep 2026

33-40 ..... Page 15 .....08 Sep 2026
33-40 ..... Page 16 .....08 Sep 2026
33-40 ..... Page 17 .....08 Sep 2026
33-40 ..... Page 18 .....08 Sep 2026

Table of Contents

List of Effective Pages ..... 33-LOEP / Page 1
Table of Contents ..... 33-TOC / Page1

Paragraph **Page Number**

Lights
1. General ..... 33-00 / Page 1
2. Troubleshooting ..... 33-00 / Page 2

Flight Compartment
1. Description ..... 33-10 / Page 1
   A. Overhead Console Light Assembly ..... 33-10 / Page 1
   B. Glare Shield Light Bar ..... 33-10 / Page 1
   C. Backlighting ..... 33-10 / Page 1
2. Maintenance Practices ..... 33-10 / Page 2
   A. Overhead Lighting Assembly ..... 33-10 / Page 2
   B. Glare Shield Light Bar ..... 33-10 / Page 4

Passenger Compartment
1. Description ..... 33-20 / Page 1
   A. Reading Lights ..... 33-20 / Page 1
   B. Cargo Area Light ..... 33-20 / Page 1
   C. Accent Lights ..... 33-20 / Page 1
2. Maintenance Practices ..... 33-20 / Page 2
   A. Reading and Cargo Lights ..... 33-20 / Page 2
   B. Step Lights ..... 33-20 / Page 4
   C. Wash Lights ..... 33-20 / Page 4
   D. Accent Lights Operational Check ..... 33-20 / Page 4
   E. Courtesy Lights Operational Check ..... 33-20 / Page 5

Exterior Lighting
1. Description ..... 33-40 / Page 1
   Position/Anti-Collision Light Assemblies ..... 33-40 / Page 1
   Landing Lights ..... 33-40 / Page 1
   Taxi Lights ..... 33-40 / Page 1
   Ice Light ..... 33-40 / Page 1
2. Maintenance Practices ..... 33-40 / Page 3
   A. Landing Light ..... 33-40 / Page 3
   B. Wing Tip Position Light and Strobe Light ..... 33-40 / Page 5
   C. Tail Position and Strobe Light ..... 33-40 / Page 11
   D. Taxi Light ..... 33-40 / Page 13
   E. Ice Light ..... 33-40 / Page 17

This Page Intentionally Left Blank

LIGHTS

1. General

This chapter gives procedures for troubleshooting, removal, and installation of the exterior and interior lighting used on this airplane. All lights on this airplane are light emitting diodes (LED).

Exterior lighting is landing, taxi, wing tip, ice, and rudder position/strobe lights. A light (called the Ice Light) mounted in the cowling can be turned on to shine on the wing leading edge giving visual verification that the de-ice system is working.

Interior lighting is instrument panel, circuit breaker panel, flood, cabin, cockpit, and emergency lights.

WARNING: Never do maintenance on interior or exterior lighting systems without verifying the BATT 1 and BATT 2 switches are OFF. Remove any external electrical power to the airplane (refer to Chapter 24-40). Pull the associated lighting circuit breaker before doing maintenance on the lighting system.

Note: LED's are polarity sensitive and must be installed in the correct configuration for correct operation. Failure to do so will render the LED inoperative.

2. Troubleshooting

Problem	Probable Cause	Solution
Reading or Cargo Light Inoperative	BATT 1 and BATT 2 switches are OFF	Set the BATT 1 and BATT 2 switches to ON.
	Circuit breaker tripped	Inspect for short circuit Reset the circuit breaker.
	Loose connection	Inspect the fixture and wiring harness plugs. Ensure solid connection at the plugs, switch, and fixture.
	Defective bulb	Replace the fixture (bulb not replaceable).
	Defective light switch	Replace the switch.
	Defective fixture or the fixture is not grounded	Replace the fixture. Check for continuity through the fixture. Repair the ground circuit.
	Aircraft battery defective	Replace the battery
Landing Light Inoperative	BATT 1 and BATT 2 switches are OFF	Set the BATT 1 and BATT 2 switches to ON.
	LAND switch is OFF	Set the LAND switch to ON.
	Circuit breaker tripped	Inspect for short circuit Reset the circuit breaker.
	Loose connection	Inspect the fixture and wiring harness plugs. Ensure solid connection at the plugs and fixture.
	Defective bulb	Replace the fixture (bulb not replaceable).
	Defective fixture or the fixture is not grounded	Replace the fixture. Check for continuity through the fixture. Repair the ground circuit.

Problem	Probable Cause	Solution
Position/Strobe Light Inoperative	BATT 1 and BATT 2 switches are OFF	Set the BATT 1 and BATT 2 switches to ON.
	NAV and STROBE switches are OFF	Set the NAV and STROBE switches to ON.
	Circuit breaker tripped	Inspect for short circuit Reset the circuit breaker.
	Loose connection	Inspect the fixture and wiring harness plugs. Ensure solid connection at the plugs and fixture.
	Defective bulb	Replace the fixture (bulb not replaceable).
	Defective fixture or the fixture is not grounded	Replace the fixture. Check for continuity through the fixture. Repair the ground circuit.
Taxi Light Inoperative	BATT 1 and BATT 2 switches are OFF	Set the BATT 1 and BATT 2 switches to ON.
	TAXI switch is OFF	Set the TAXI switch to ON.
	Circuit breaker tripped	Inspect for short circuit Reset the circuit breaker.
	Loose connection	Inspect the fixture and wiring harness plugs. Ensure solid connection at the plugs and fixture.
	Defective bulb	Replace the fixture (bulb not replaceable).
	Defective fixture or the fixture is not grounded	Replace the fixture. Check for continuity through the fixture. Repair the ground circuit.

Problem	Probable Cause	Solution
Ice Light Inoperative	BATT 1 and BATT 2 switches are OFF	Set the BATT 1 and BATT 2 switches to ON.
	ICE switch is OFF	Set the ICE switch to ON.
	Circuit breaker tripped	Inspect for short circuit Reset the circuit breaker.
	Loose connection	Inspect the fixture and wiring harness plugs. Ensure solid connection at the plugs and fixture.
	Defective bulb	Replace the LED module.
	The fixture is not grounded	Check for continuity through the fixture. Repair the ground circuit.

FLIGHT COMPARTMENT

1. Description

Flight compartment lighting is provided by a central overhead lighting assembly installed in the cockpit overhead panel, a light bar on the lower-aft edge of the glare shield and backlighting on the various switch and circuit breaker panels.

A. Overhead Console Light Assembly

The overhead console light assembly consists of two map lights and four spot lights.

(1) Two white LED map lights, pre-aimed for pilot and co-pilot use, are fixed brightness, and controlled by switches located aft of each map light. The switches are illuminated by a blue ring for ease of identification in low light conditions.

(2) Four red LED spot lights are aimed to provide additional lighting to the control yokes, throttle quadrant, and fire extinguisher storage compartment. All four spot lights adjustable for brightness by a single toggle switch in the middle of the overhead light assembly. The toggle switch is identified by as self-illuminating placard and will dim the spot lights when actuated aft and brighten them when actuated forward.

The overhead console light assembly is powered by 28 VDC from the ACC2 BUS through the 5A READ LIGHTS circuit breaker on the right circuit breaker panel.

B. Glare Shield Light Bar

A glare shield light bar is provided to supplement the instrument and panel backlighting and consists of a single strip light that contains 30 individual red LEDs. It is controlled along with the panel backlighting by the PANEL/CREW dimmer switch on the dimmer control panel.

The glare shield light bar is powered by 28 VDC from the ESSENTIAL BUS through the 5A PANEL LIGHTS circuit breaker on the left circuit breaker panel.

C. Backlighting

Backlighting is provided on the left and right circuit breaker panels, the left and right switch panels, the climate panel, the fuel selector and the dimmer panel. It is controlled, along with the glare shield light bar, by the PANEL/CREW dimmer switch on the dimmer control panel.

Backlighting is powered by 28 VDC from the ESSENTIAL BUS through the 5A PANEL LIGHTS circuit breaker on the left circuit breaker panel.

Lighting in integrally lit instruments, the multi function display (MFD), and primary function displays (PFD) are not user replaceable and must be returned to the manufacturer for repair.

2. Maintenance Practices

A. Overhead Lighting Assembly

(1) Removal

(a) Remove the overhead finish panels (refer to Chapter 25-20).

(b) Remove the screws and washers attaching the lighting assembly to the centerpost finish panel.

(c) Remove the lighting assembly.

(2) Installation

(a) Installation is the reverse of removal.

(b) Torque the screws 11 in-lbs.

(c) Install the overhead finish panels (refer to Chapter 25-20).

(3) Inspection

(a) Inspect the overhead lighting assembly for any inoperative LEDs. Replacement of the overhead lighting assembly is required if any single LED is inoperative.

(4) Operational Check

(a) Set the BATT 1 and BATT 2 switches to ON.

(b) Open the READ LIGHTS circuit breaker.

(c) Make sure the Crew Overhead Light Dim switch has no function over the 4 red reading lights.

(d) Close the READ LIGHTS circuit breaker.

(e) Make sure the 4 red crew reading lights illuminate.

(f) Make sure the crew overhead light dimming switch dims the crew red lights when pressed aft and brightens them when pressed forward.

(g) Set the BATT 1 and BATT 2 switches to off.

Figure 33-10.1: Overhead Lighting Assembly

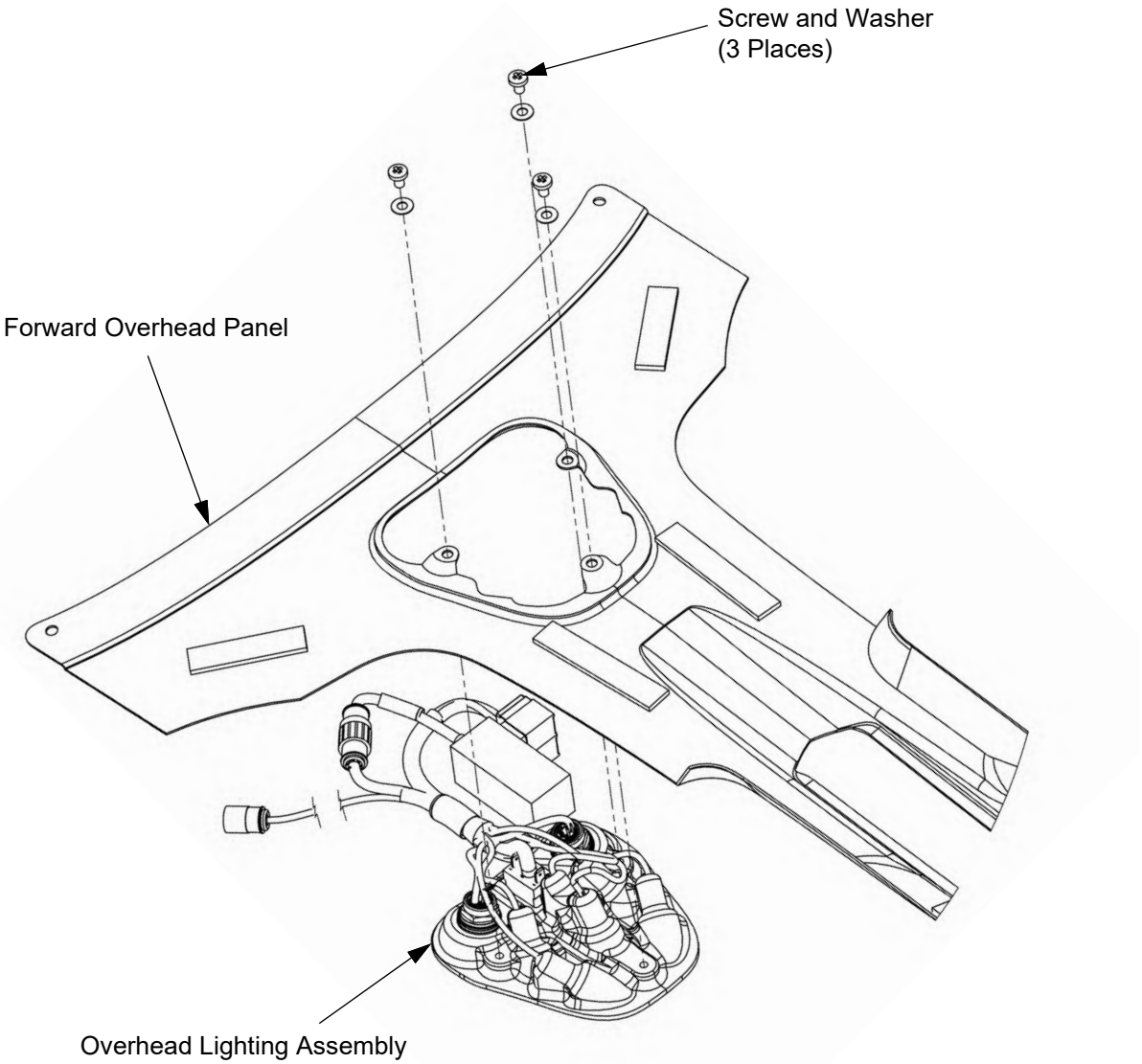

B. Glare Shield Light Bar

(1) Removal

(a) Remove the glare shield (refer to Chapter 25-10).

(b) Remove the connector from the glare shield light bar.

(c) Using a heat gun carefully soften the Devcon adhesive attaching the light bar to the glare shield.

(d) Remove the light bar.

(e) Remove as much adhesive as possible from the glare shield.

(2) Installation

(a) Route the light wires through the glare shield light bar wire conduit.

(b) Install the connector to the light bar wires.

(c) Apply Devcon adhesive to the side of the light bar without LED lights then bond the light bar to the underside of the glare shield. Allow the adhesive to cure in accordance with the adhesive manufacturer's instructions.

(d) Install the glare shield (refer to Chapter 25-10).

(3) Operational Test

(a) Set the BATT 1 and BATT 2 switch ON.

(b) With the PANEL LIGHTS circuit breaker IN, adjusting the CREW rotary control should allow the glare shield lights to be dimmed or brightened.

(c) Set the BATT 1 and BATT 2 switch off.

(4) Inspection

(a) Inspect the glare shield light bar for any inoperative LEDs. Replace the light bar if any single LED is inoperative.

Figure 33-10.2: Glare Shield Light bar

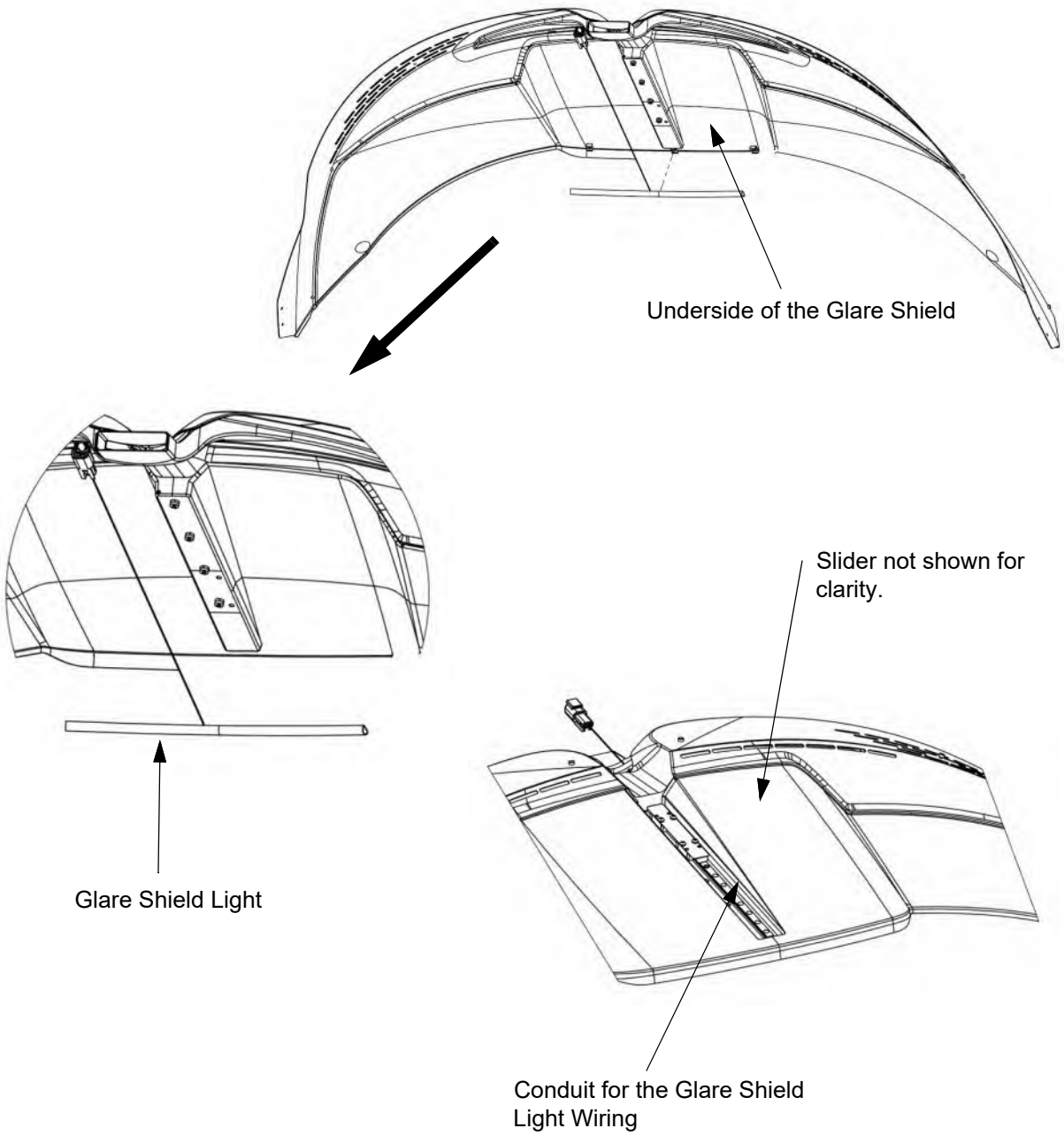

This Page Intentionally Left Blank

PASSENGER COMPARTMENT

1. Description

Passenger compartment lighting consists of four passenger reading lights, a single cargo area light, and accent lights.

A. Reading Lights

There are four reading lights, one above each passenger position. Each white LED reading light has adjustable aim and is controlled be a switch next to the light.

The reading lights are powered by 28 VDC from the ACC2 BUS through the 5A READ LIGHTS circuit breaker on the right circuit breaker panel.

B. Cargo Area Light

There is a single spot light in the cargo area. It is a white LED with adjustable aim and is controlled be a switch next to the light.

The cargo light is powered by 28 VDC from the ACC2 BUS through the 5A READ LIGHTS circuit breaker on the right circuit breaker panel.

C. Accent Lights

The accent lights consists of lights in the door steps and wash lights in the cabin overhead panel.

(1) The three door steps each house an LED courtesy light. The lights are controlled in conjunction with the cabin accent lights by the courtesy light switch installed on the lower interior trim just aft of the cabin door and the CABIN ACCENT light switch on the dimmer control panel.

(2) The wash lighting is provided by four LED light strips in the cabin overhead panel. The lights are controlled in conjunction with the step lights by the courtesy light switch installed on the lower interior trim just aft of the cabin door and the CABIN ACCENT light switch on the dimmer control panel.

When the cabin door is opened the cabin wash lights and step lights will illuminate and are powered from the 28 VDC HOT BUS through the 5A AUTO LIGHTS circuit breaker. The lights are controlled by a time delay relay and will extinguish after 9 minutes. The 9 minute timer can be restarted by pressing the courtesy light switch by the cabin door.

When the BATT No. 1 switch is in the ON position, the accent lights are powered by 28 VDC from the ACC2 BUS through the 5A CABIN LIGHTS circuit breaker. Control of the lights is through the CABIN ACCENT light switch on the dimmer panel.

When the BATT No. 1 switch is put in the OFF position the circuit will again be powered through the HOT BUS on the timed circuit and be controlled by the courtesy light switch and the position of the cabin door.

2. Maintenance Practices

A. Reading and Cargo Lights

(1) Removal

(a) Set the BATT 1 and BATT 2 switches to off.

(b) Pull the READ LIGHTS and CABIN LIGHTS circuit breakers.

(c) Remove the overhead finish panel (refer to Chapter 25-20).

(d) Disconnect the electrical connections from the light.

(e) Remove the locknut from the switch then remove the switch from the overhead finish panel.

(f) Remove the lock ring from the light then remove the light from the overhead finish panel.

(2) Installation

(a) Insert the light into the overhead finish panel then attach it using the lock ring.

(b) Insert the light switch into the overhead finish panel then attach it using a nut.

(c) Connect the electrical connections to the light.

(d) Install the overhead finish panel (refer to Chapter 25-20).

(e) Reset the READ LIGHTS and CABIN LIGHTS circuit breakers.

(f) Do the Operational Check of the light.

(3) Operational Check

(a) Set the BATT 1 and BATT 2 switches to ON.

(b) Make sure the READ LIGHTS circuit breaker is closed.

(c) Make sure the reading light switch rings illuminate.

(d) Make sure that the reading lights illuminate.

(e) Set the BATT 1 and BATT 2 switches to off.

Figure 33-20.1: Reading and Cargo Lights (Sheet 1 of 2)

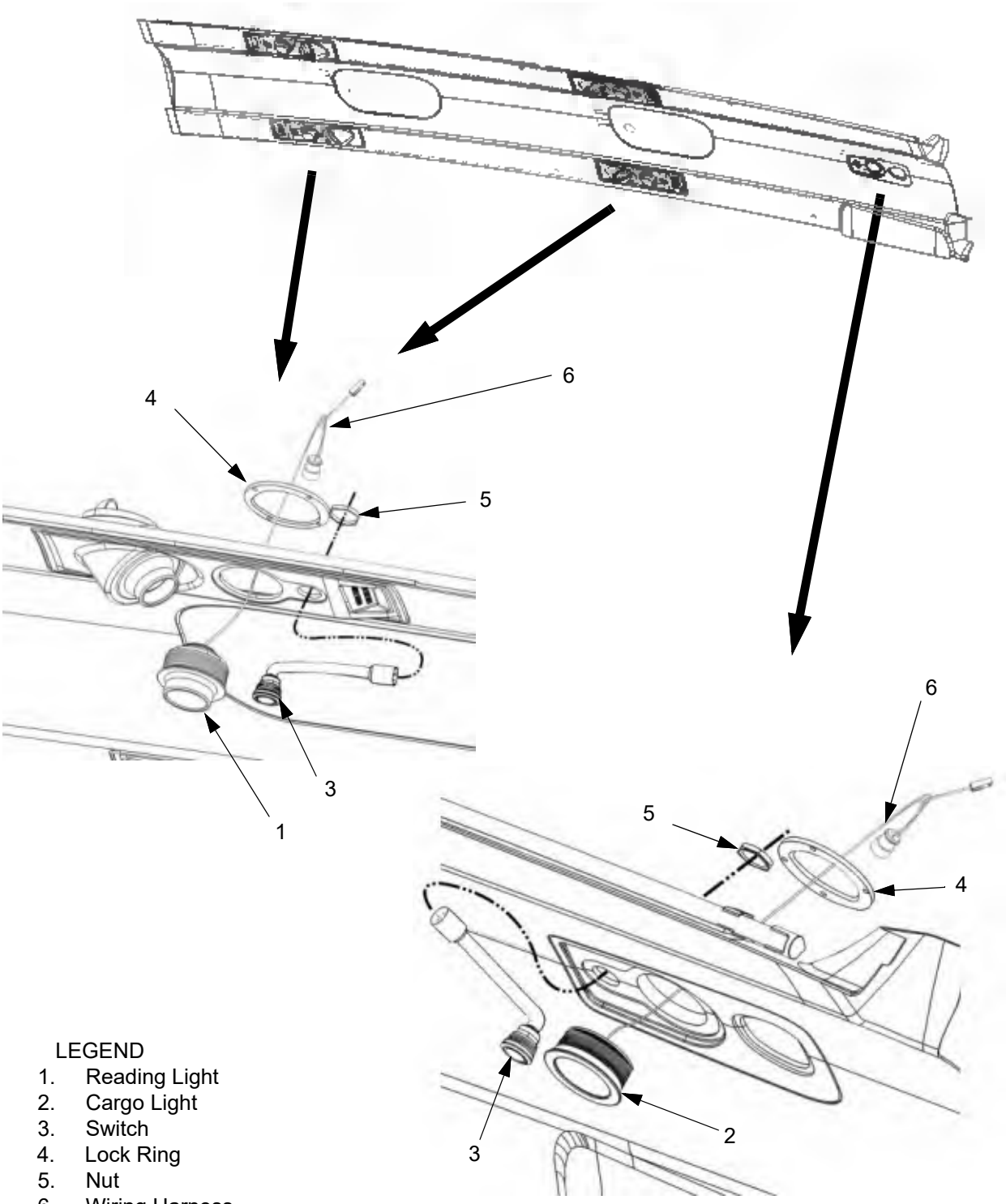

LEGEND
1. Reading Light
2. Cargo Light
3. Switch
4. Lock Ring
5. Nut
6. Wiring Harness

B. Step Lights

Note: Step lights are not replaceable. A new step assembly is required if its step light is inoperative.

(1) Removal
  (a) Set the BATT 1 and BATT 2 switches to OFF.
  (b) Pull the AUTO LIGHTS and CABIN LIGHTS circuit breakers.
  (c) Remove the step assembly (refer to Chapter 52-10).

(2) Installation
  (a) Install the step assembly (refer to Chapter 52-10).
  (b) Reset the AUTO LIGHTS and CABIN LIGHTS circuit breakers.
  (c) Do the Operational Check of the accent lights.

(3) Inspection
  (a) Inspect the step lights for any inoperative LEDs. Replace the step assembly if any single LED is inoperative.

C. Wash Lights

(1) Removal
  (a) Set the BATT 1 and BATT 2 switches to OFF.
  (b) Pull the AUTO LIGHTS and CABIN LIGHTS circuit breakers.
  (c) Remove the overhead finish panel (refer to Chapter 25-20).
  (d) Disconnect the electrical connector.
  (e) Remove the LED light strip from the clips.

(2) Installation
  (a) Install the LED light strip in the clips.
  (b) Connect the electrical connector.
  (c) Install the overhead finish panel (refer to Chapter 25-20).
  (d) Reset the AUTO LIGHTS and CABIN LIGHTS circuit breakers.
  (e) Do the Operational Check of the accent lights.

(3) Inspection
  (a) Inspect the wash lights for any inoperative LEDs. Replace the wash light if any single LED is inoperative.

D. Accent Lights Operational Check

(1) Set the BATT 1 and BATT 2 switches to ON.

(2) Make sure the CABIN LIGHTS circuit breaker is closed.

(3) Adjust the CABIN rotary control on the dimmer switch panel and make sure the wash lights dim and brighten.

(4) Adjust the ACCENT rotary control on the dimmer switch panel and make sure the wash lights dim and brighten.

(5) Set the BATT 1 and BATT 2 switches to off.

Figure 33-20.2: Wash Lights

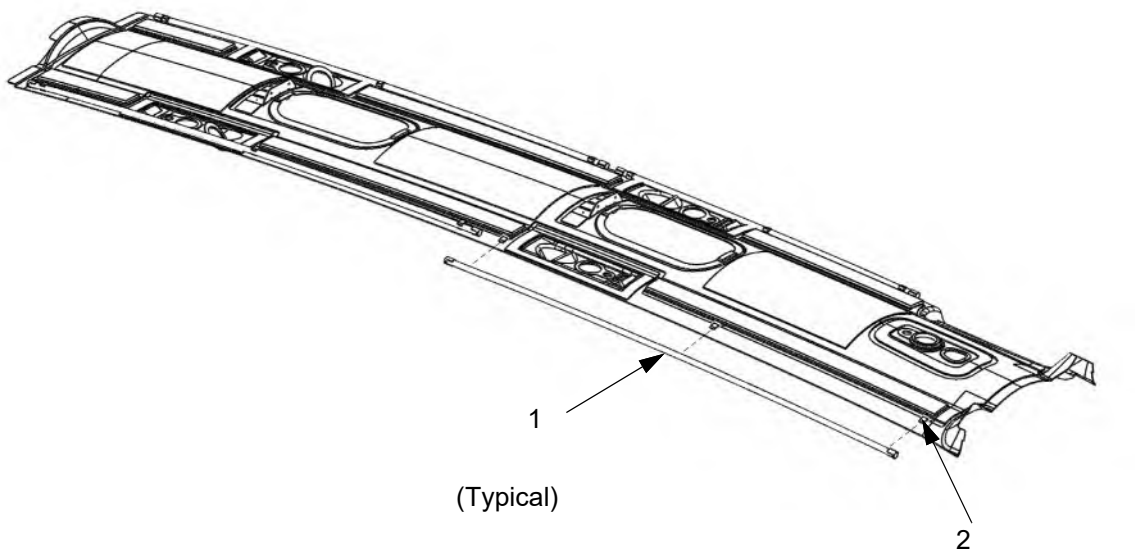

LEGEND
1. Wash Light
2. Clips

E. Courtesy Lights Operational Check

(1) Make sure aircraft power is off and the cabin door is closed.

(2) Open the cabin door and make sure the courtesy lights (wash, accent and step lights) illuminate and stay on for 9 minutes.

(3) Make sure the dimmer panel control does not affect courtesy light brightness.

(4) Press the COURTESY LIGHT switch and make sure the courtesy lights illuminate for an additional 9 minutes.

(5) Close the cabin door.

(6) Set the BATT 1 and BATT 2 switches to ON.

(7) Make sure the courtesy lights brightness can be adjusted from zero to full on the dimmer panel.

(8) Set the BATT 1 and BATT 2 switches to off.

This Page Intentionally Left Blank

EXTERIOR LIGHTING

1. Description

Exterior lighting consists of combined position/anti-collision light assemblies and landing lights in the wing tips, a combined position/anti-collision light assembly in the rudder tip, taxi lights on the nose landing gear, and an ice light on the left side lower engine cowling.

Position/Anti-Collision Light Assemblies

The position/anti-collision light assemblies are mounted in the wing tips and on the top of the rudder.

(1) The position (navigation) lights include red (left wing), green (right wing), and white (tail) LEDs. The function of the tail position and anti-collision lights is provided by a single white LED assembly.

(2) The three anti-collision (strobe) lights are white LEDs and are synchronized to flash at the same time.

The position and anti-collision lights are powered and controlled through separate circuits. The position lights are powered by 28 VDC from the ACC2 BUS through the 5A POSITION LIGHTS circuit breaker on the left circuit breaker panel and controlled by the NAV switch on the right switch panel. The anti-collision lights are powered by 28 VDC from the ACC2 BUS through the 5A STROBE LIGHTS circuit breaker on the left circuit breaker panel and controlled by the STROBE switch on the right switch panel.

Landing Lights

Two LED landing lights are mounted in the forward surface of the wing tips and are vertically adjustable on the ground by the mounting bolt.

The landing lights are powered by 28 VDC from the ACC2 BUS through the 5A LANDING LIGHTS circuit breaker on the left circuit breaker panel and controlled by the LAND switch on the right switch panel.

Taxi Lights

Two LED taxi lights are mounted on the upper forward nose landing gear trunnion and are not adjustable.

The taxi lights are powered by 28 VDC from the ACC2 BUS through the 5A TAXI LIGHTS circuit breaker on the right circuit breaker panel and controlled by the TAXI switch on the right switch panel.

Ice Light

The LED ice light is mounted in the left side lower engine cowling and is aimed at the leading edge of the left wing. It assists with visual detection of airfoil icing and de-icing system operation.

The ice light is powered by 28 VDC from the ACC1 BUS through the 5A ICE LIGHT circuit breaker on the right circuit breaker panel and controlled by the ICE switch on the right switch panel.

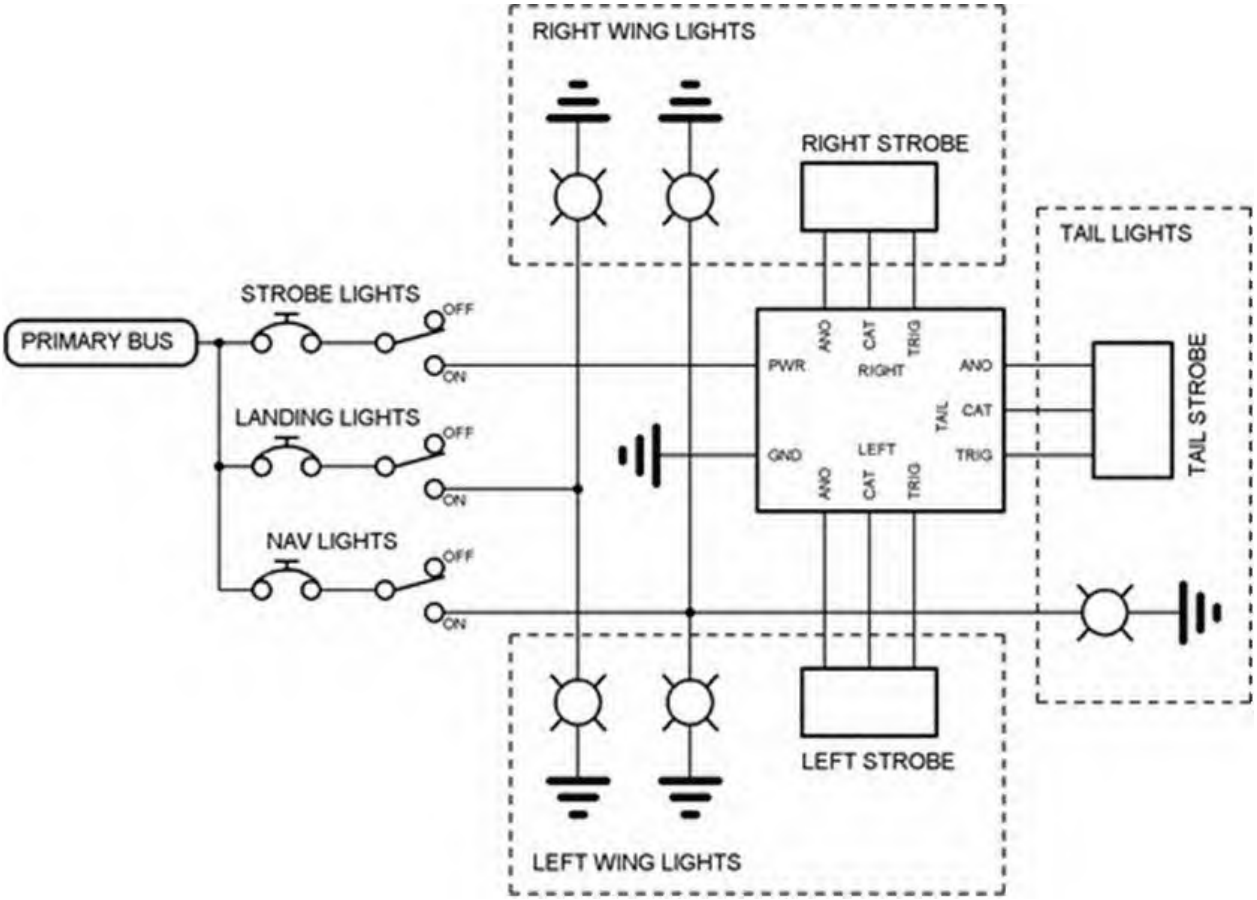
RIGHT WING LIGHTS
RIGHT STROBE
TAIL LIGHTS
STROBE LIGHTS
OFF
PRIMARY BUS
ON
PWR
ANO
CAT
TRIG
RIGHT
ANO
TAIL
CAT
TAIL STROBE
LANDING LIGHTS
OFF
GND
LEFT
TRIG
ON
ANO
CAT
TRIG
NAV LIGHTS
OFF
ON
LEFT STROBE
LEFT WING LIGHTS

2. Maintenance Practices

A. Landing Light

(1) Removal (K003 - K028) Refer to Figure 33-40.1

(a) Set the BATT 1 and BATT 2 switches to off.

(b) Ensure the LAND switch is off.

(c) Pull the LAND LIGHTS circuit breaker

(d) Disconnect external electrical power from the airplane (refer to Chapter 24-40).

(e) Remove the wing tip (refer to Chapter 57-30).

(f) Remove the wing tip lens.

(g) Disconnect the wiring harness.

(h) Remove the bolt, washers, lock washer, and nut attaching the landing light to its mounting bracket. Note the attachment of the grounding straps for re-installation.

(i) Remove the landing light from the wingtip.

(2) Removal (K029 and On) Refer to Figure 33-40.

(a) Set the BATT 1 and BATT 2 switches to off.

(b) Ensure the LAND switch is off.

(c) Pull the LAND LIGHTS circuit breaker

(d) Disconnect external electrical power from the airplane (refer to Chapter 24-40).

(e) Remove the wing tip (refer to Chapter 57-30).

(f) Remove the wing tip lens.

(g) Remove the socket head screws, washers and springs that attach the landing light and tripod plate to the mounting plate.

(h) Remove the landing light and tripod plate from the wing tip.

(i) Remove the screws, washers and nuts that attach the landing light to the tripod plate.

(j) Remove the landing light.

(3) Installation (K003 - K028)

(a) Attach the landing light and the grounding straps to the landing light mounting bracket using a bolt, washers, lock washer, and nut.

(b) Ensure the landing light is free of any contaminants. Clean the lens and reflective surfaces as necessary.

(c) Ensure the wing tip lens is free of any contaminants. Clean the lens as necessary.

(d) Install the wing tip lens. Tighten the screws until they are fully seated. Do not exceed 5 in-lbs.

(e) Install the wing tip (refer to Chapter 57-30).

(f) Reset the LAND LIGHTS circuit breaker.

(4) Installation (K029 and On)

(a) Put the landing light in position on the tripod plate and install the screws, washers and nuts. Torque to 7 - 9 in-lbs.

(b) Put the landing light/tripod mount assembly in position on the wing tip and install the socket head screws, washers, and springs.

(c) Ensure the landing light is free of any contaminants. Clean the lens and reflective surfaces as necessary.

(d) Ensure the wing tip lights cover is free of any contaminants. Clean the cover as necessary.

(e) Install the wing tip lens. Tighten the screws until they are fully seated. Do not exceed 5 in-lbs.

(f) Install the wing tip (refer to Chapter 57-30).

(g) Reset the LAND LIGHTS circuit breaker.

(h) Do the adjustment procedure, refer to 33-40.2(a)(7).

(5) Operational Test

(a) Set the BATT 1 and BATT 2 switch ON.

(b) Set the LAND switch ON

(c) Verify proper operation of the landing lights.

(d) Set the BATT 1 and BATT 2 and LAND switches off.

(6) Adjustment (K003 - K028) Refer to Figure 33-40.3.

(a) Position the airplane facing a wall with the tip of the spinner 60 inches from the wall. Rotate the airplane so the wingtips are the same distance from the wall.

(b) Raise and level the airplane using aircraft jacks. Refer to Chapter 7-10 and 8-20.

(c) Measure the vertical distance from the center of the landing light to the ground.

(d) Make two 24 inch square outlines on the wall using masking tape at the locations shown in figure 33-40.3.

(e) Set the BATT 1 and BATT 2 switch ON.

(f) Set the LAND switch ON.

(g) Verify proper alignment of the landing lights. If not Properly aligned continue with the steps below.

(h) Remove the wing tip (refer to Chapter 57-30) then adjust the position of the landing light as necessary.

(i) Re-install the wing tip then test the lights again.

(j) Continue steps (e) through (g) until the landing light beam is centered on the outlined square.

(7) Adjustment (K028 and On) Refer to Figure 33-40.4.

(a) Position the airplane facing a wall with the tip of the spinner 60 inches from the wall. Rotate the airplane so the wingtips are the same distance from the wall.

(b) Raise and level the airplane using aircraft jacks. Refer to Chapter 7-10 and 8-20.

(c) Measure the vertical distance from the center of the landing light to the ground.

(d) Make two 24 inch square outlines on the wall using masking tap at the locations shown in figure 33-40.4.

(e) Set the BATT 1 and BATT 2 switch ON.

(f) Set the LAND switch ON.

(g) Verify proper alignment of the landing lights. If not properly aligned continue with the steps below.

(h) Remove the wing tip lens (refer to Chapter 57-30).

(i) Adjust each landing light by independently turning the three adjustment screws that are visible around the perimeter of the landing light until the focal point of each light is in the center of its corresponding target square on the target wall.

Note: Make sure the adjustment screw springs located behind the tripod plate have some level of compression applied without being fully compressed.

(j) Re-install the wing tip lens.

(8) Inspection

(a) Inspect the landing lights for any inoperative LEDs. Replace the landing light if any single LED is inoperative.

B. Wing Tip Position Light and Strobe Light

(1) Removal

(a) Set the BATT 1 and BATT 2 switches to off.

(b) Ensure the NAV and STROBE switches are off.

(c) Pull the NAV LIGHTS and STROBE LIGHTS circuit breakers

(d) Disconnect external electrical power from the airplane (refer to Chapter 24-40).

(e) Remove the wing tip (refer to Chapter 57-30).

(f) Remove the wing tip lights cover.

(g) Remove the four screws attaching the position/strobe light to its mounting plate.

(h) Carefully pull the light away from the wingtip to access the wiring connector.

(i) Disconnect the light from the wiring harness.

(j) Remove the light from the airplane.

(k) If necessary, remove the three screws attaching the position/strobe light mounting plate to the wing tip then remove the plate from the airplane.

(2) Installation

(a) If necessary, install the position/strobe light mounting plate onto the wing tip using three screws.

(b) Connect the position/strobe light to the wiring harness. Do an operational test.

(c) Attach the position/strobe light to its mounting plate using screws.

(d) Ensure the position/strobe light is free of any contaminants. Clean the lens and reflective surfaces as necessary.

(e) Ensure the wing tip lens cover is free of any contaminants. Clean the cover as necessary.

(f) Install the wing tip lens. Tighten the screws until they are fully seated. Do not exceed 5 in-lbs.

(g) Install the wing tip (refer to Chapter 57-10).

(h) Reset the NAV LIGHTS and STROBE LIGHTS circuit breakers.

(3) Operational Test

(a) Set the BATT 1 and BATT 2 switch ON.

(b) Set the NAV and STROBE switches ON

(c) Verify proper operation of the nav/strobe lights.

(d) Set the BATT 1 and BATT 2, NAV, and STROBE switches off.

(4) Inspection

(a) Inspect the position and strobe light assemblies for any inoperative LEDs. Replace the position and strobe light assembly if any single LED is inoperative.

Figure 33-40.1: Landing and Wing Position and Strobe Lights (K003 - K028)

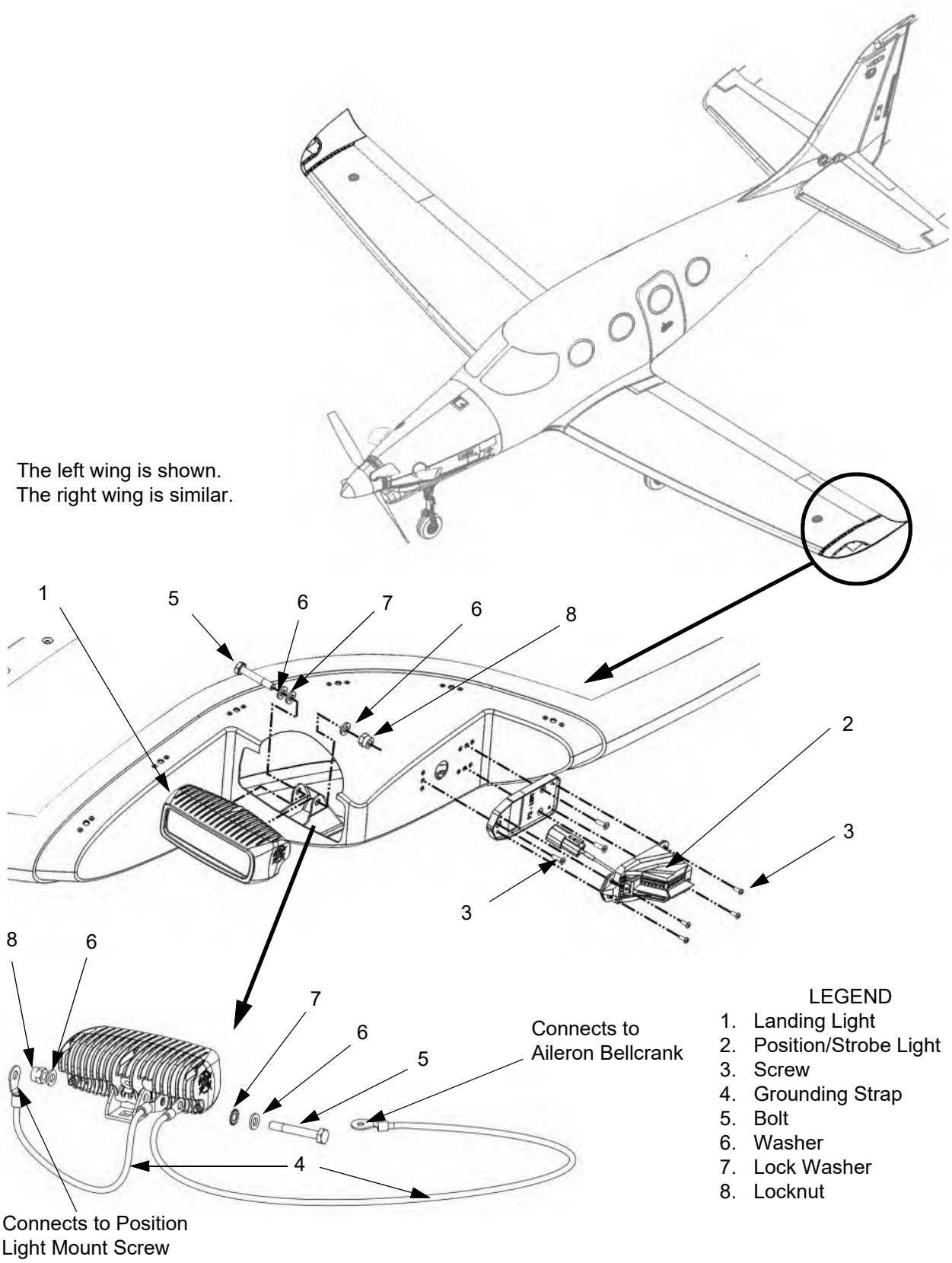

Figure 33-40.2: Landing and Wing Position and Strobe Lights (K029 and On) (Sheet 1 of 2)

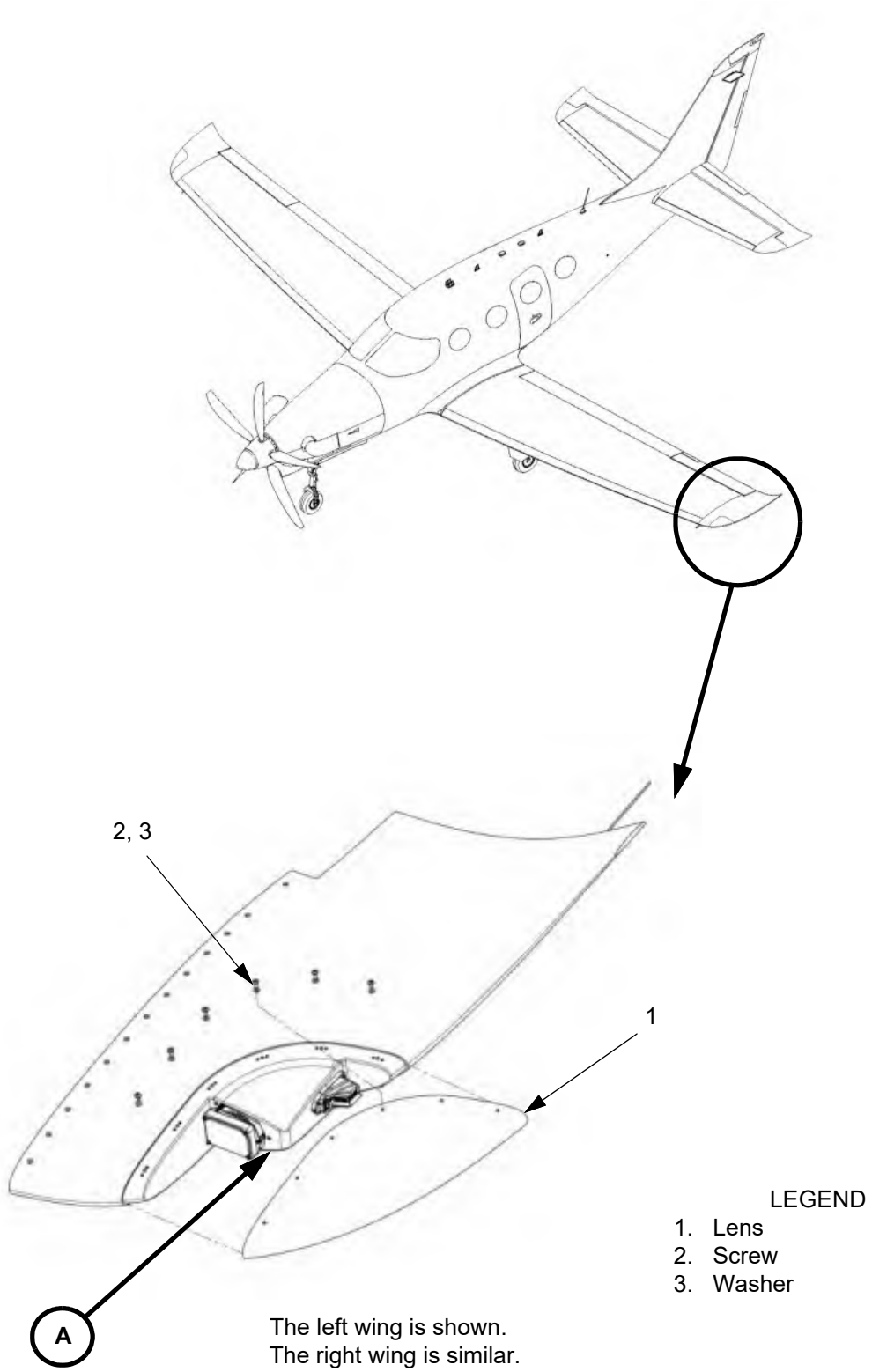

Figure 33-40.2: Landing and Wing Position and Strobe Lights (K029 and On) (Sheet 2 of 2)

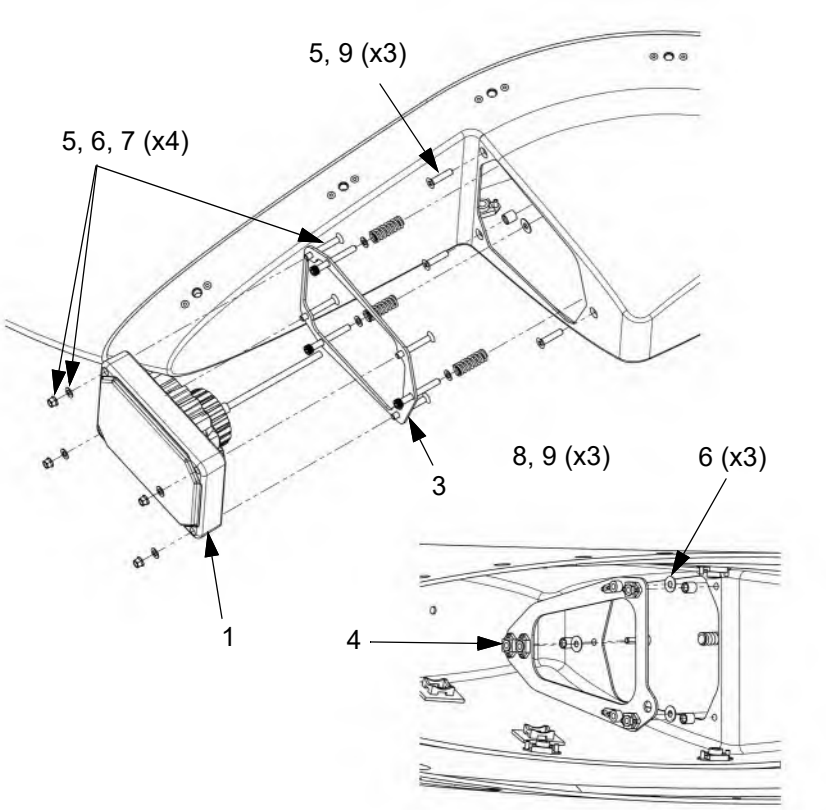

LEGEND

1. Landing Light
2. Position/Strobe Light
3. Tripod Plate
4. Mounting Plate
5. Screw
6. Washer
7. Locknut
8. Spring
9. Spacer
10. Socket Head Screw

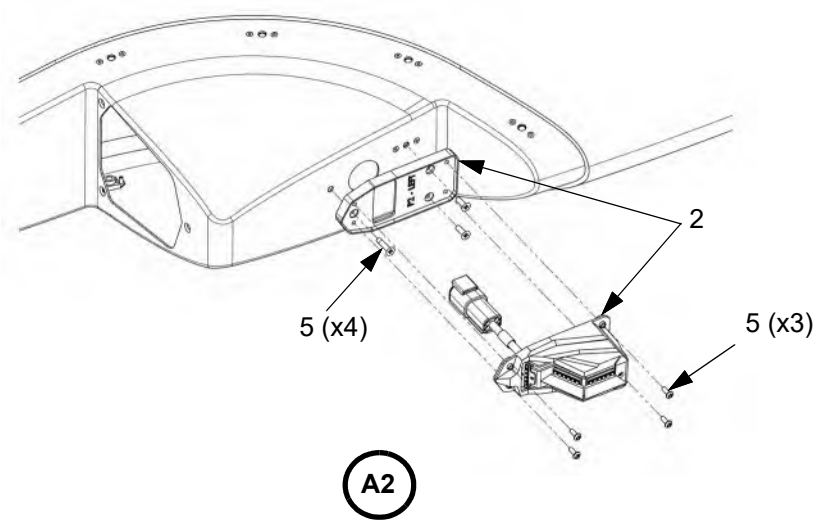

Figure 33-40.3: Landing Light Adjustment (K003 - K028)

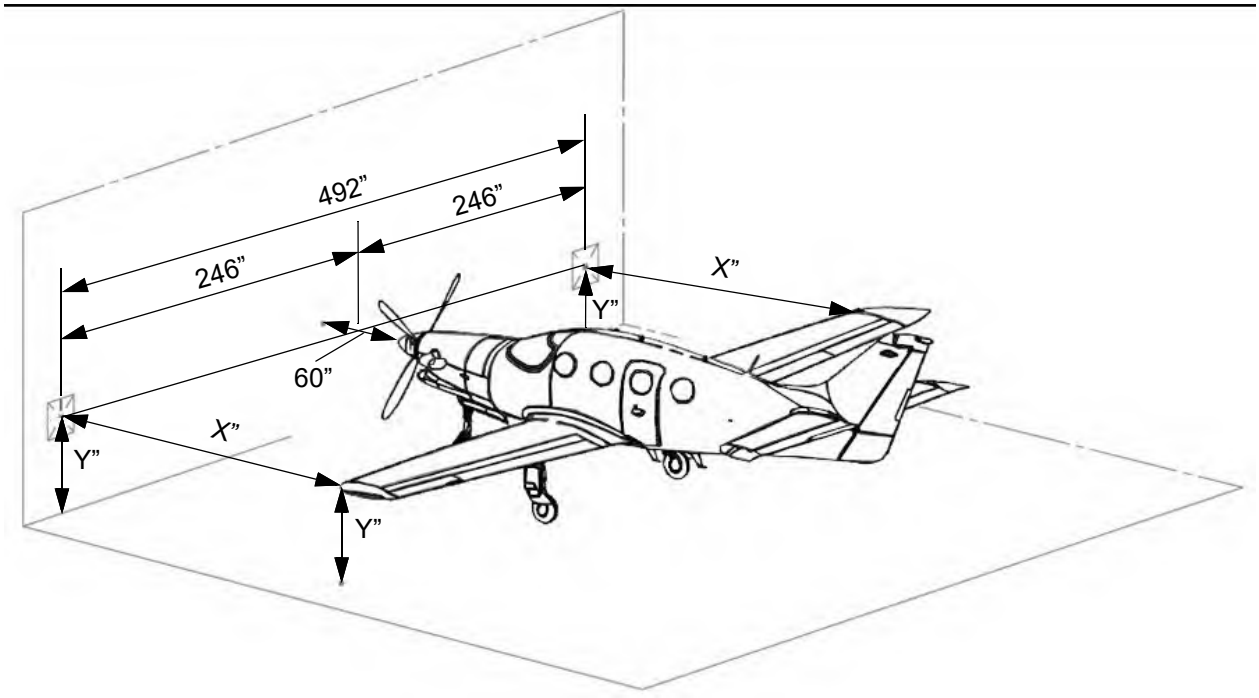

Figure 33-40.4: Landing Light Adjustment (K028 and On)

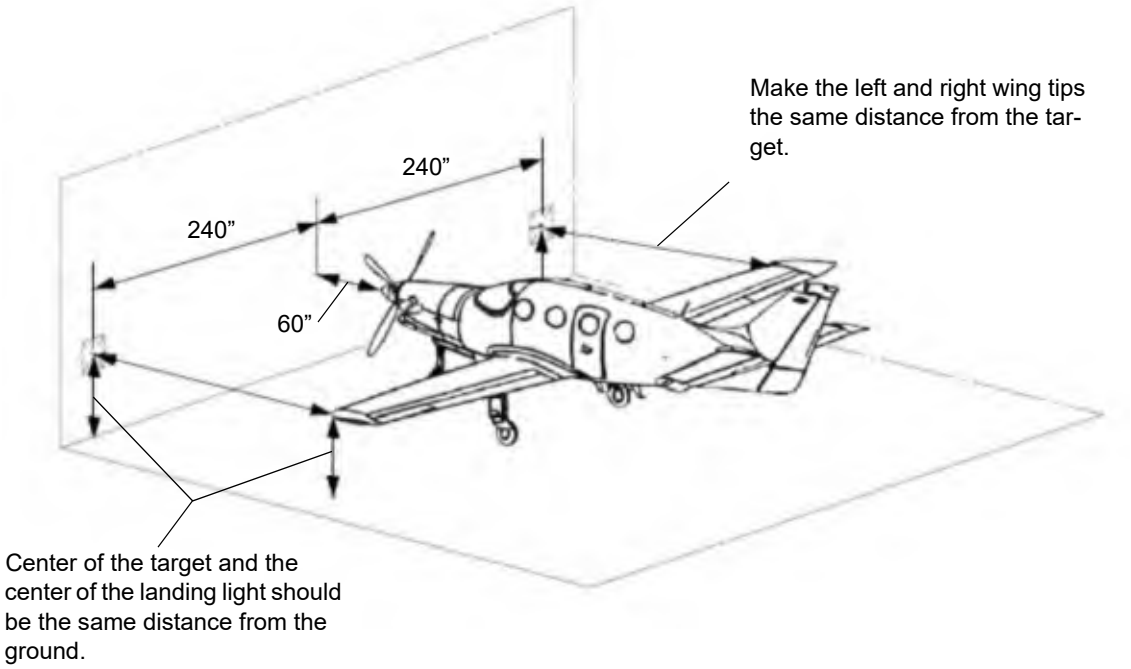

C. Tail Position and Strobe Light

(1) Removal

(a) Set the BATT 1 and BATT 2 switches to off.

(b) Ensure the NAV and STROBE switches are off.

(c) Pull the NAV LIGHTS and STROBE LIGHTS circuit breakers.

(d) Disconnect external electrical power from the airplane (refer to Chapter 24-40).

(e) Remove the two screws attaching the nav/strobe light to the rudder.

(f) Carefully pull the light out then disconnect the wiring harness.

(g) Remove the nav/strobe light.

(2) Installation

(a) Connect the nav/strobe light to the airplane electrical harness.

(b) Do an operational test.

(c) Slide the light into the rudder then attach it using two screws.

(d) Reset the NAV LIGHTS and STROBE LIGHTS circuit breakers.

(3) Operational Test

(a) Set BATT 1 and BATT 2 switch ON.

(b) Set NAV and STROBE switches ON

(c) Verify proper operation of the nav/strobe lights.

(d) Set the BATT 1 and BATT 2, NAV, and STROBE switches off

(4) Inspection

(a) Inspect the tail position and strobe light assembly for any inoperative LEDs. Replace the position and strobe light assembly if any single LED is inoperative.

Figure 33-40.5: Nav/Strobe Light on the Rudder

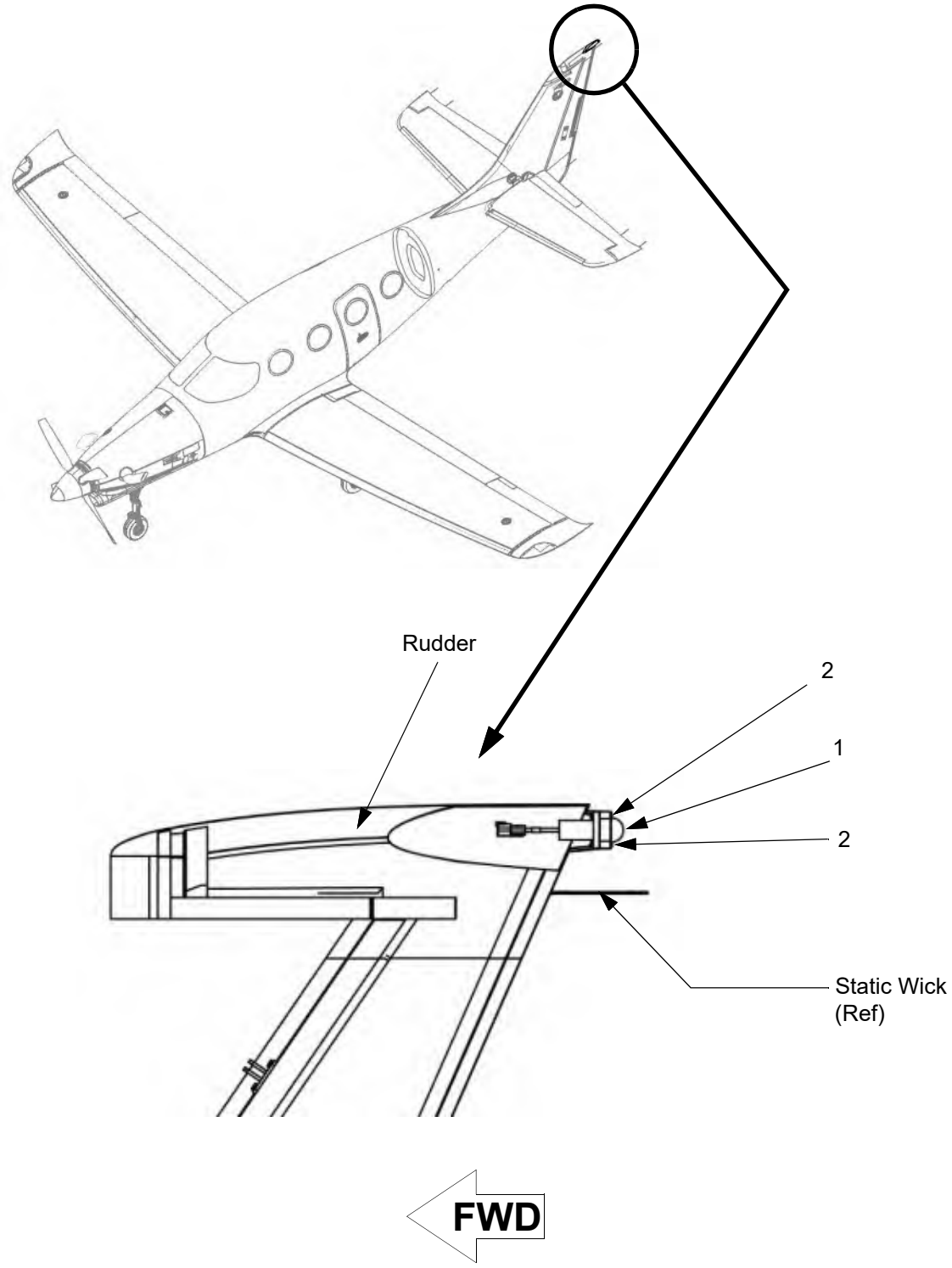

Right rudder skin not shown for clarity.

LEGEND
1. Nav/Strobe Light
2. Screw

D. Taxi Light

Refer to Figure 33-40.5 for (K003 - K028) and Figure 33-40.6 for (K029 and On).

(1) Removal (K003 - K028)
- (a) Ensure the TAXI switch is off.
- (b) Set the BATT 1 and BATT 2 switches to off.
- (c) Pull the TAXI LIGHTS circuit breaker.
- (d) Disconnect external electrical power from the airplane (refer to Chapter 24-40).
- (e) Disconnect the taxi light electrical connector.
- (f) Remove the bolts, washers, and nuts attaching the light to its mounting bracket on the nose gear.
- (g) Remove the light from the airplane.
- (h) Remove the gasket.

(2) Removal (K029 and On)
- (a) Ensure the TAXI switch is off.
- (b) Set the BATT 1 and BATT 2 switches to off.
- (c) Pull the TAXI LIGHTS circuit breaker.
- (d) Disconnect external electrical power from the airplane (refer to Chapter 24-40).
- (e) Disconnect the taxi light electrical connector.
- (f) Remove the screws that attach the taxi light and mounting bracket to the taxi light bracket.
- (g) Remove the taxi light/mounting bracket assembly from the nose landing gear.
- (h) Remove the screws, washers, and locknuts that attach the taxi light to the mounting bracket.
- (i) Remove the taxi light.

(3) Installation (K003 - K028)
- (a) Install the gasket onto the back of the taxi light.
- (b) Connect the taxi light electrical connector.
- (c) Attach the light to its mounting bracket using bolts, washers, and nuts.
- (d) Reset the TAXI LIGHTS circuit breaker.
- (e) Do an operational test.

(4) Installation (K029 and On)
- (a) Put the taxi light in position on the mounting bracket.
- (b) Install the screws, washers, and locknuts that attach the taxi light to the mounting bracket.
- (c) Put the taxi light/mounting bracket assembly in position on the taxi light bracket.
- (d) Install the screws that attach the taxi light/mounting bracket assembly to the taxi light bracket.

(e) Connect the taxi light electrical connector.

(f) Reset the TAXI LIGHTS circuit breaker.

(g) Do an operational test.

(5) Operational Test

(a) Set the BATT 1 and BATT 2 switch ON.

(b) Set the TAXI switch to ON.

(c) Verify proper operation of the taxi lights.

(d) Set the TAXI switch to off.

(e) Set the BATT 1 and BATT 2 and TAXI switches off

(6) Inspection

(a) Inspect the taxi light assemblies for any inoperative LEDs. Replace the taxi light assembly if any single LED is inoperative.

Figure 33-40.6: Taxi Lights (K003 - K028)

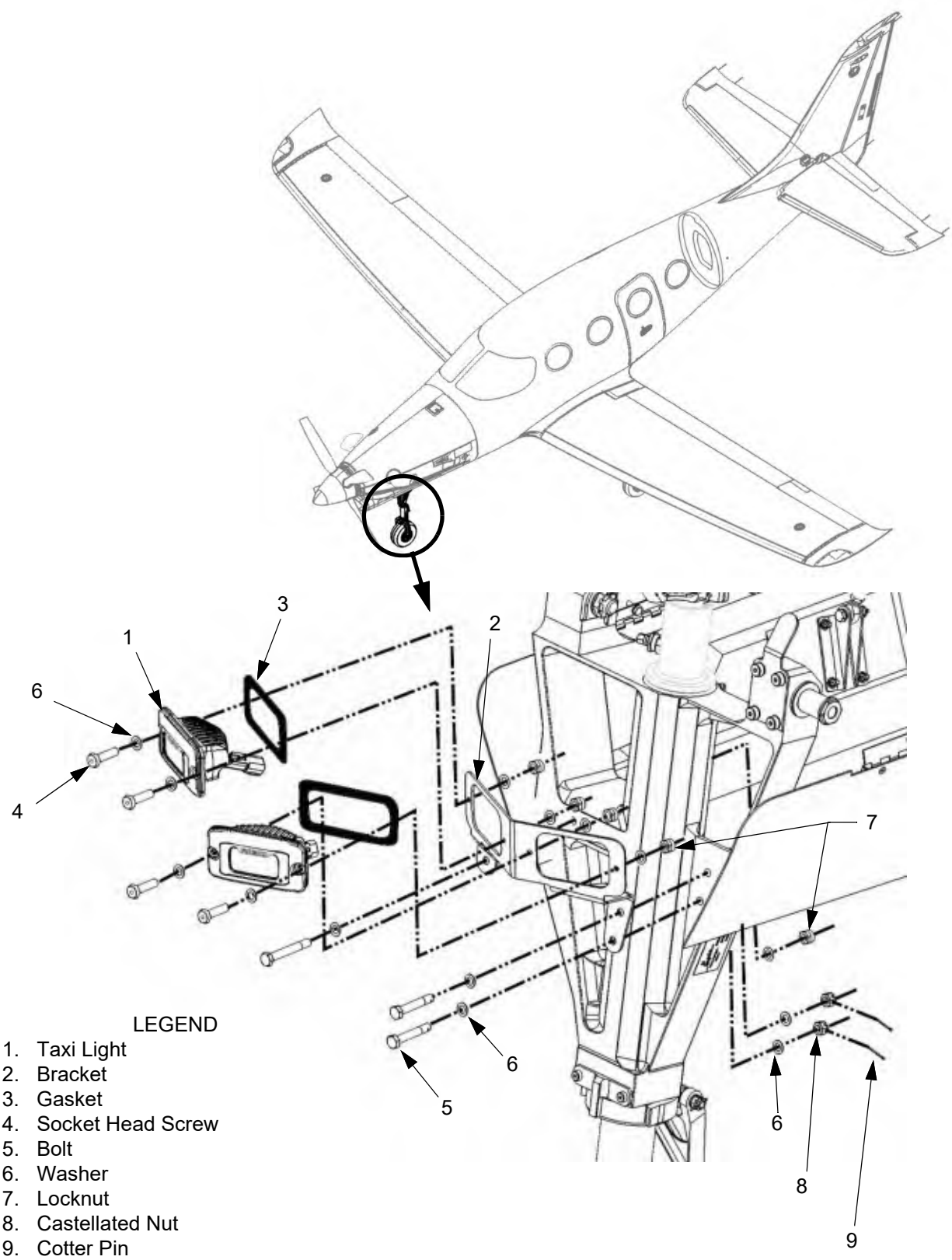

LEGEND

1. Taxi Light
2. Bracket
3. Gasket
4. Socket Head Screw
5. Bolt
6. Washer
7. Locknut
8. Castellated Nut
9. Cotter Pin

Figure 33-40.7: Taxi Lights (K029 and On)

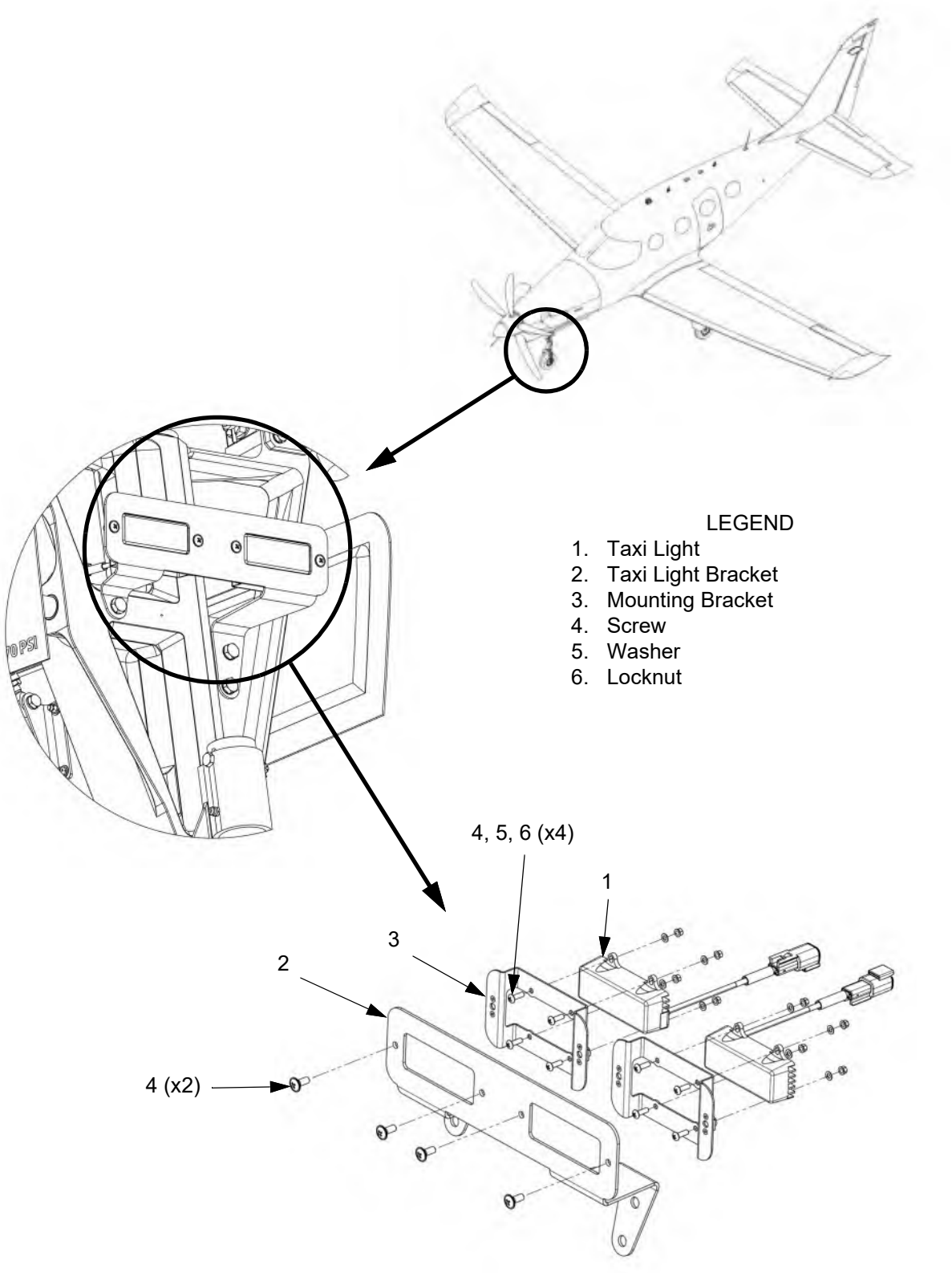

E. Ice Light

Refer to Figure 34-40.8. Ice Light

(1) Removal

(a) Set the BATT 1 and BATT 2 switches to off.

(b) Ensure the ICE switch is off.

(c) Pull the ICE LIGHT circuit breaker.

(d) Disconnect external electrical power from the airplane (refer to Chapter 24-40).

(e) Remove the upper and left cowling (refer to Chapter 71-10).

Note: Disconnect the wiring harness from the ice light before fully removing the cowling.

(f) Remove the three screws attaching the light to the cowling then remove the light.

(2) Installation

(a) Connect the wiring harness to the ice light then install the left and upper cowling (refer to Chapter 71-10).

(b) Reset the ICE LIGHT circuit breaker.

(c) Do an operational test. Refer to Chapter 33-40.

(d) Position the ice light against the inside of the left cowling then attach it to the cowling using three screws.

(3) Operational Test

(a) Set BATT 1 and BATT 2 switch ON.

(b) Set ICE switch ON

(c) Verify proper operation of the ice light.

(d) Set the BATT 1 and BATT 2 and ICE switches off.

(4) Inspection

(a) Inspect the ice light assembly for any inoperative LEDs. Replace the ice light assembly if any single LED is inoperative.

Figure 33-40.8: Ice Light

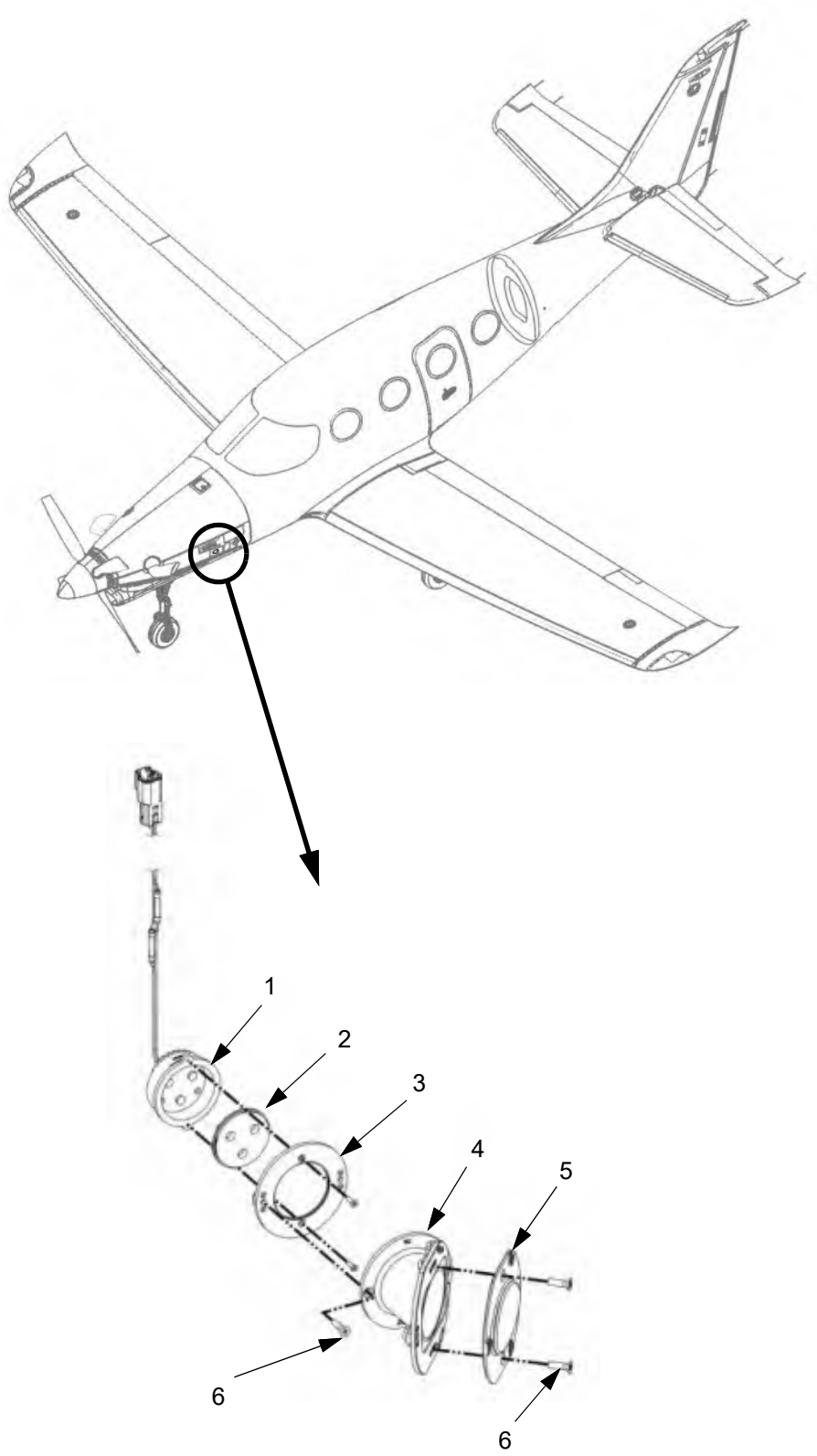

LEGEND
1. LED Module
2. Reflector
3. Lens Retainer
4. Mount
5. Lens
6. Screw

CHAPTER
34

Navigation

This Page Intentionally Left Blank

List of Effective Pages

Chapter/Section	Page Number	Effective Date
34-Title	Page 1	02 Jan 2020
34-Title	Page 2	02 Jan 2020
34-LOEP	Page 1	08 Sep 2026
34-LOEP	Page 2	08 Sep 2026
34-LOEP	Page 3	08 Sep 2026
34-LOEP	Page 4	08 Sep 2026
34-TOC	Page 1	08 Sep 2026
34-TOC	Page 2	08 Sep 2026
34-00	Page 1	10 Jul 2025
34-00	Page 2	14 Jul 2021
34-00	Page 3	14 Jul 2021
34-00	Page 4	10 Jul 2025
34-00	Page 5	10 Jul 2025
34-00	Page 6	10 Jul 2025
34-00	Page 7	08 Sep 2026
34-00	Page 8	08 Sep 2026
34-00	Page 9	08 Sep 2026
34-00	Page 10	08 Sep 2026
34-00	Page 11	08 Sep 2026
34-00	Page 12	08 Sep 2026
34-00	Page 13	08 Sep 2026
34-00	Page 14	08 Sep 2026
34-10	Page 1	08 Sep 2026
34-10	Page 2	08 Sep 2026
34-10	Page 3	08 Sep 2026
34-10	Page 4	08 Sep 2026
34-10	Page 5	08 Sep 2026
34-10	Page 6	08 Sep 2026
34-10	Page 7	08 Sep 2026
34-10	Page 8	08 Sep 2026
34-10	Page 9	08 Sep 2026
34-10	Page 10	08 Sep 2026
34-10	Page 11	08 Sep 2026
34-10	Page 12	08 Sep 2026
34-10	Page 13	08 Sep 2026
34-10	Page 14	08 Sep 2026
34-10	Page 15	08 Sep 2026
34-10	Page 16	08 Sep 2026
34-10	Page 17	08 Sep 2026
34-10	Page 18	08 Sep 2026

34-10 ..... Page 19 ..... 08 Sep 2026
34-10 ..... Page 20 ..... 08 Sep 2026
34-10 ..... Page 21 ..... 08 Sep 2026
34-10 ..... Page 22 ..... 08 Sep 2026
34-10 ..... Page 23 ..... 08 Sep 2026
34-10 ..... Page 24 ..... 08 Sep 2026
34-10 ..... Page 25 ..... 08 Sep 2026
34-10 ..... Page 26 ..... 08 Sep 2026
34-10 ..... Page 27 ..... 08 Sep 2026
34-10 ..... Page 28 ..... 08 Sep 2026
34-10 ..... Page 29 ..... 08 Sep 2026
34-10 ..... Page 30 ..... 08 Sep 2026
34-10 ..... Page 31 ..... 08 Sep 2026
34-10 ..... Page 32 ..... 08 Sep 2026

34-20 ..... Page 1 ..... 14 Jul 2021
34-20 ..... Page 2 ..... 08 Sep 2026
34-20 ..... Page 3 ..... 08 Sep 2026
34-20 ..... Page 4 ..... 08 Sep 2026
34-20 ..... Page 5 ..... 08 Sep 2026
34-20 ..... Page 6 ..... 08 Sep 2026
34-20 ..... Page 7 ..... 08 Sep 2026
34-20 ..... Page 8 ..... 08 Sep 2026
34-20 ..... Page 9 ..... 08 Sep 2026
34-20 ..... Page 10 ..... 08 Sep 2026
34-20 ..... Page 11 ..... 08 Sep 2026
34-20 ..... Page 12 ..... 08 Sep 2026

34-40 ..... Page 1 ..... 10 Jul 2025
34-40 ..... Page 2 ..... 14 Jul 2021
34-40 ..... Page 3 ..... 02 Jan 2020
34-40 ..... Page 4 ..... 02 Jan 2020
34-40 ..... Page 5 ..... 08 Sep 2026
34-40 ..... Page 6 ..... 08 Sep 2026
34-40 ..... Page 7 ..... 08 Sep 2026
34-40 ..... Page 8 ..... 08 Sep 2026
34-40 ..... Page 9 ..... 08 Sep 2026
34-40 ..... Page 10 ..... 08 Sep 2026
34-40 ..... Page 11 ..... 08 Sep 2026
34-40 ..... Page 12 ..... 08 Sep 2026
34-40 ..... Page 13 ..... 08 Sep 2026
34-40 ..... Page 14 ..... 08 Sep 2026
34-40 ..... Page 15 ..... 08 Sep 2026
34-40 ..... Page 16 ..... 08 Sep 2026
34-40 ..... Page 17 ..... 08 Sep 2026
34-40 ..... Page 18 ..... 08 Sep 2026
34-40 ..... Page 19 ..... 08 Sep 2026

34-40 ..... Page 20 ..... 08 Sep 2026
34-40 ..... Page 21 ..... 08 Sep 2026
34-40 ..... Page 22 ..... 08 Sep 2026
34-40 ..... Page 23 ..... 08 Sep 2026
34-40 ..... Page 24 ..... 08 Sep 2026

34-50 ..... Page 1 ..... 10 Jul 2025
34-50 ..... Page 2 ..... 16 May 2021
34-50 ..... Page 3 ..... 16 May 2021
34-50 ..... Page 4 ..... 16 May 2021
34-50 ..... Page 5 ..... 16 May 2021
34-50 ..... Page 6 ..... 16 May 2021

This Page Intentionally Left Blank

Table of Contents

List of Effective Pages ..... 34-LOEP / Page 1
Table of Contents ..... 34-TOC / Page1

Paragraph **Page Number**

Navigation

1. General ..... 34-00 / Page 1
2. Garmin G1000 NXI System Software and Configuration ..... 34-00 / Page 1
3. Troubleshooting ..... 34-00 / Page 5

Flight Environment Data

1. Description ..... 34-10 / Page 1
   - A. Pitot-Static System Design Overview ..... 34-10 / Page 1
   - B. Pitot Pressure System ..... 34-10 / Page 2
   - C. Static Pressure System ..... 34-10 / Page 3
2. Maintenance Practices ..... 34-10 / Page 3
   - A. Pitot Tube Assembly ..... 34-10 / Page 3
   - B. Static Ports ..... 34-10 / Page 4
   - C. Pitot and Static Plumbing ..... 34-10 / Page 6
   - D. Pitot and Static System Drains ..... 34-10 / Page 6
   - E. Pitot Static System Inspection and Purging ..... 34-10 / Page 7
   - F. Pitot Static System Leakage Test ..... 34-10 / Page 8
   - G. Altimeter System Test and Inspection ..... 34-10 / Page 8
   - H. Pitot Static Airspeed Test ..... 34-10 / Page 12
   - I. Pitot Heat and Pitot Heat Current Sensor Operational Check ..... 34-10 / Page 14
   - J. RVSM ..... 34-10 / Page 24
   - K. Outside Air Temperature (OAT) Probe ..... 34-10 / Page 30

Attitude and Direction

1. Description ..... 34-20 / Page 1
2. Maintenance Practices ..... 34-20 / Page 1
   - A. GTX 33D, GTX 335DR, GTX 345DR Transponder ..... 34-20 / Page 1
   - B. L3 Aviation Products MAG-500 Magnetometer ..... 34-20 / Page 3
   - C. GMU 44 Magnetometer ..... 34-20 / Page 4
   - D. GSU 75 ADAHRS ..... 34-20 / Page 8
   - E. Garmin GI 275 Electronic Flight Instrument (SN: K014, K040 and On) ..... 34-20 / Page 9
   - F. L3 Aviation ESI-500 Electronic Standby Instrument (SN: K003 - K039) ..... 34-20 / Page 10
   - G. L3 Aviation Systems DCM-500 Data Configuration Module ..... 34-20 / Page 11

Independent Position Determining

1. Description ..... 34-40 / Page 1
2. Maintenance Practices ..... 34-40 / Page 1
   A. GDU 1050 Primary Flight Display ..... 34-40 / Page 1
   B. GDU 1250 Multifunction Display ..... 34-40 / Page 1
   C. GCU 477 Flight Management System (FMS) Controller ..... 34-40 / Page 2
   D. GTS 825 Traffic Advisory System Processor ..... 34-40 / Page 5
   E. GPS 1 Antenna (Garmin GA 37) ..... 34-40 / Page 7
   F. GPS 2 Antenna or Iridium/GPS L1 Antenna ..... 34-40 / Page 7
   G. TAS Antenna (Garmin GA 58) - Fuselage Top ..... 34-40 / Page 8
   H. TAS Antenna (Garmin GA 58) - Fuselage Bottom ..... 34-40 / Page 8
   I. Comant CI 120-1 NAV/VOR/GS Antenna ..... 34-40 / Page 9
   J. Cooling Fan (Garmin GCF 528) ..... 34-40 / Page 14
   K. Cooling Fan (Garmin Tubeaxial Fan) ..... 34-40 / Page 14
   L. Garmin GWX 70 Weather Radar (Optional) ..... 34-40 / Page 16
   M. Garmin GRA 5500 Radar Altimeter (SN: K014, K086 and On) ..... 34-40 / Page 19
   N. Garmin Radar Altimeter Antennas (SN: K014, K086 and On) ..... 34-40 / Page 22

Dependent Position Determining

1. Description ..... 34-50 / Page 1
2. Maintenance Practices ..... 34-50 / Page 1
   A. GIA 64W NAV/COM/ILS/GPS/WAAS and System Interface ..... 34-50 / Page 1
   B. Marker Beacon Antenna (Comant CI 118) ..... 34-50 / Page 4
   C. Transponder Antenna (Comant CI 105) ..... 34-50 / Page 4

NAVIGATION

1. General

This airplane has a Garmin G1000 NXi avionics suite designed to integrate pilot/airplane interaction into one central system. The system combines primary flight instrumentation, airplane systems instrumentation, and navigational information which are all displayed on three large color displays.

Components of the system include:

1) Two independent Primary Flight Displays.
2) One Multifunction Flight Display.
3) Dual NAV/COM radios.
4) Two transponders.
5) Two independent Air Data, Attitude and Heading Reference Systems (ADAHRS)
6) Two independent pitot/static systems.
7) Dual lift detectors in a stall prevention system.
8) A backup attitude, airspeed, altitude, and slip indicator with independent emergency battery power.

The system receives and interprets data using Line Replaceable Units (LRUs) which have a modular design for easier inspection and replacement.

For a detailed description of the system refer to the current revision of the Garmin G1000 NXi Integrated Avionics System Line Maintenance Manual for the Epic E1000, P/N 190-02330-01.

K003-K085 (excluding K014), refer to the current revision of the E1000 Wiring Manual, P/N SK05000002.

K014, K086 and on, refer to the current revision of the E1000 Wiring Manual, P/N SK05003002.

2. Garmin G1000 NXI System Software and Configuration

For loading all G1000 NXi software and configuration files refer to the current revision of the Garmin G1000 NXi Integrated Avionics System Line Maintenance Manual for the Epic E1000:

Classic: 190-02330-01 Rev 1
GX: 190-02330-01 Rev 2
GX + GWX: 190-02330-02 Rev 3
AX: 190-02344-00 Rev 1

Figure 34-00.1: Garmin G1000 NXi Architectural Overview - E1000

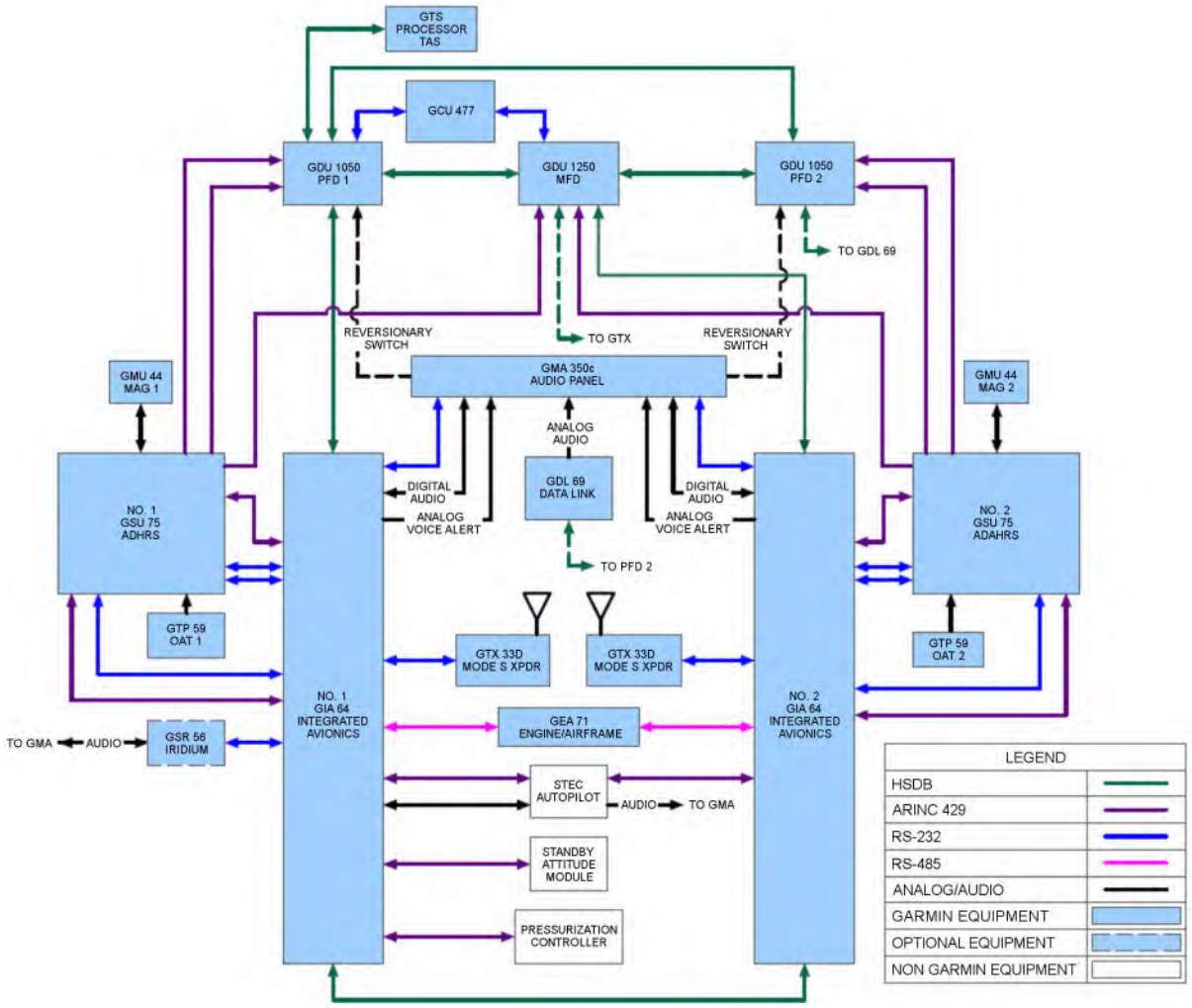

Figure 34-0.1: Garmin G1000 NXi Architectural Overview - E1000 *GX*

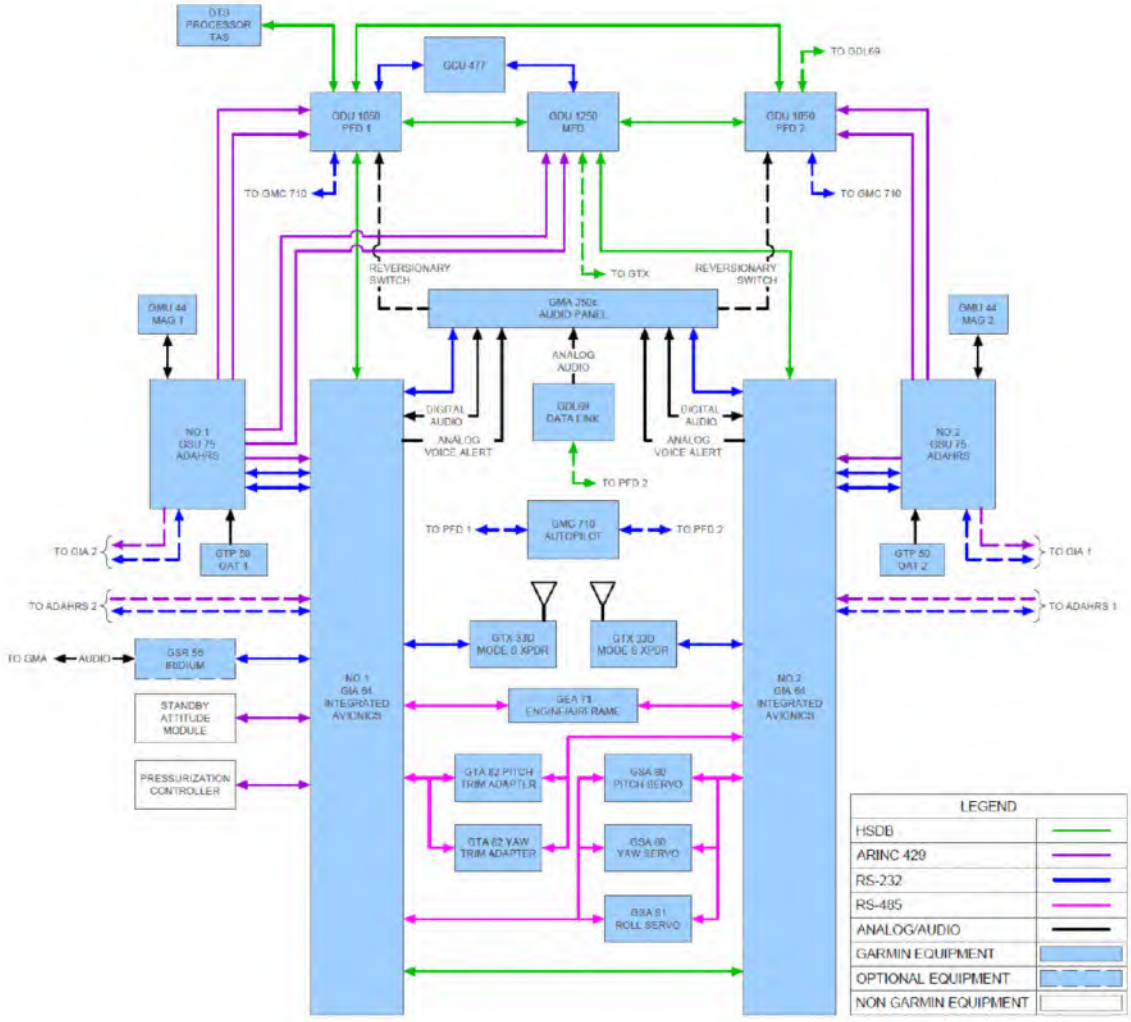

Figure 34-0.2: Garmin G1000 NXi Architectural Overview - E1000 *AX*

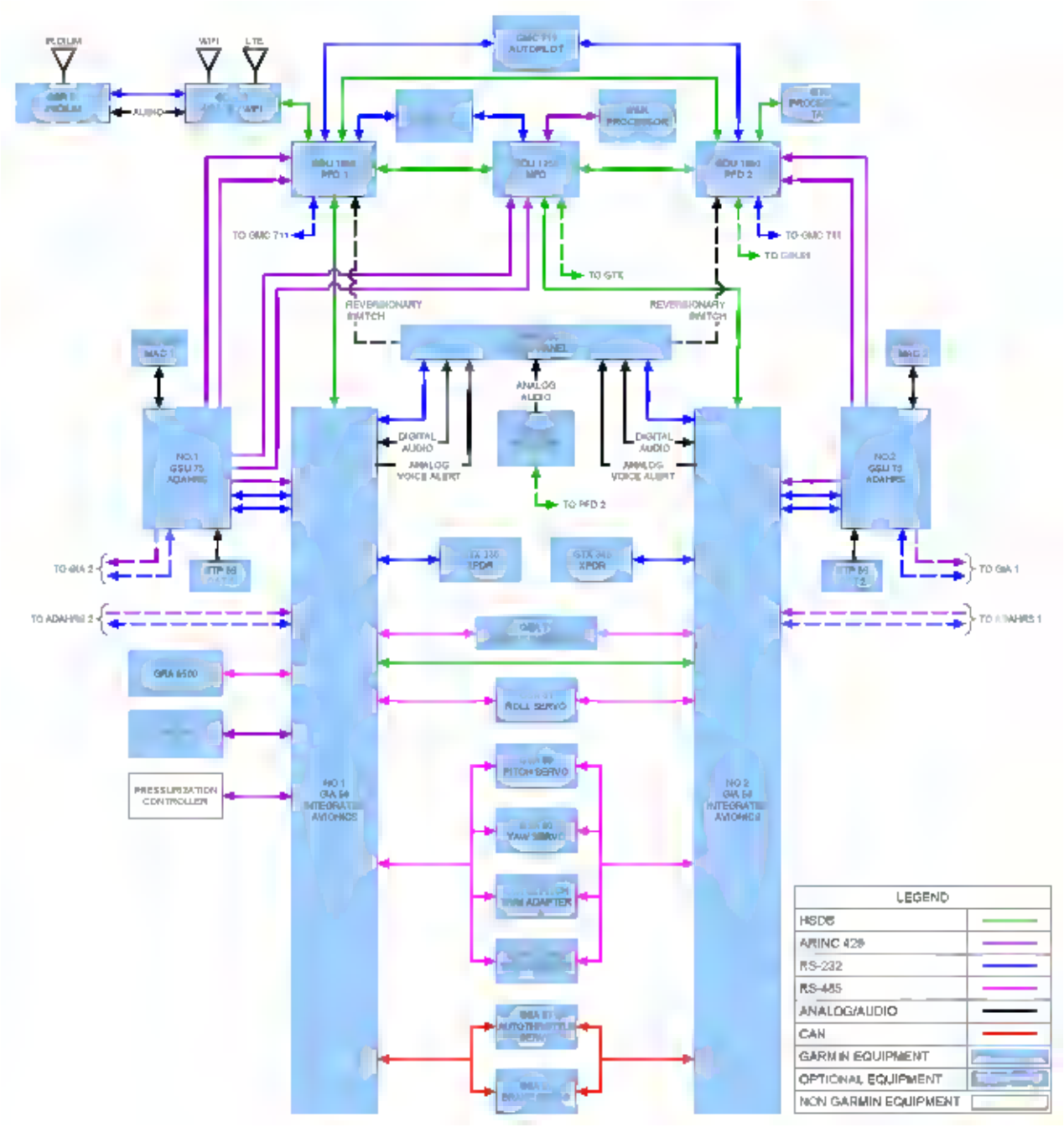

3. Troubleshooting

For troubleshooting refer to the table below and the current revision of the Garmin G1000 NXi Integrated Avionics System Line Maintenance Manual for the Epic E1000, P/N 190-02330-01.

Pitot Static		
Problem	Probable Cause	Solution
Incorrect altimeter of vertical speed indication	leaks in pitot and/or static line	Check pitot lines for leaks. Do an altimeter system test and inspection. Refer to Chapter 34-10.
		Check pitot lines for leaks. Do a static system leakage test. Refer to Chapter 34-10.
Pitot tube does not heat	L PITOT HEAT, R PITOT HEAT, L PITOT HT CTRL, and/or R PITOT HT CTRL circuit breaker pulled	Set circuit breaker
	Break in wiring	Test and repair wiring
	Heating element burned out	Replace pitot tube. Refer to Chapter 34-10.
L PITOT HT FAIL or R PITOT HT FAIL CAS Caution Message displays.	L PITOT HEAT, R PITOT HEAT, L PITOT HT CTRL, and/or R PITOT HT CTRL circuit breaker pulled	Set circuit breaker
	Break in wiring	Test and repair wiring
	Heating element burned out	Replace pitot tube. Refer to Chapter 34-10.
Low or sluggish airspeed indication	Pitot tube deformed	Inspect the pitot tube.
	Leak or obstruction in pitot line	Replace the pitot line.

Vertical Speed Indicator		
Problem	Probable Cause	Solution
Incorrect indication	Moisture in static line	Check and clean lines and drain.
		Do a pitot static system inspection and purge. Refer to Chapter 34-10.
Indication fails to respond	Obstruction in static line	Check and clean lines and drain.
		Do a pitot static system inspection and purge. Refer to Chapter 34-10.
Indication oscillates or fails to respond	Leaks in static line	Do a pitot static system inspection and purge. Refer to Chapter 34-10.

Airspeed Indicator		
Problem	Probable Cause	Solution
Indication fails to respond	Obstruction in pitot line	Check and clean lines and drain.
		Do a pitot static system inspection and purge. Refer to Chapter 34-10.
Indication oscillates or is incorrect	Leaks in pitot or static line	Replace lines
	Moisture in static line	Check and clean lines and drain.
		Do a pitot static system inspection and purge. Refer to Chapter 34-10.

A. Garmin System Checkout

(1) GPS Failure Test

(a) Single GPS Failure

(i) Place a metal shroud over the GPS antenna for GIA 1 to prevent signal reception or disconnect the GPS antenna wiring then verify loss of signal on the MFD AUX GPS Page. With loss of GPS signal verify all of the following remain valid:

- Attitude and Heading from ADAHRS.
- Airspeed, Altitude and Vertical Speed from ADAHRS.
- GPS CDI remains valid on PFD.
- "BOTH ON GPS 1" or "BOTH ON GPS 2" reversionary sensor annunciations appear on both PFDs.

(ii) Remove the metal shroud from the first GPS antenna for GIA 1 or reconnect the GPS antenna wiring and place it on the GPS antenna for GIA 2 then verify loss of signal on the MFD AUX GPS Page. With loss of GPS signal verify all of the following remain valid:

- Attitude and Heading from ADAHRS.
- Airspeed, Altitude and Vertical Speed from ADAHRS.
- GPS CDI remains valid on PFD.
- "BOTH ON GPS 1" or "BOTH ON GPS 2" reversionary sensor annunciations appear on both PFDs.

(b) Dual GPS Failure

(i) Cover both GPS antennas with a metal shroud then verify loss of GPS signal on the MFD AUX GPS Page. With loss of GPS signal verify all of the following occur:

- GPS CDI flags GPS LOI on PFD.
- Attitude and Heading remain valid from ADAHRS.
- Airspeed, Altitude, and Vertical Speed remain valid from ADAHRS.

(ii) Remove the metal shrouds from the GPS antennas then verify both GPS receivers re-acquire satellite signals.:

(2) GIA Failure Test

(a) Single GIA Failure

(i) Remove power from GIA 1 by pulling the COM 1 and GPS/NAV 1 circuit breakers.

(ii) Verify the following flag invalid:

- COM/NAV 1 field.
- NAV 1 CDI loses deviation bar.

(iii) Restore power to GIA 1 by pushing in the COM 1 and GPS/NAV 1 circuit breakers. Verify all signals are acquired.

(iv) Remove power from GIA 2 by pulling the COM 2 and GPS/NAV2 circuit breakers. Verify the following flag invalid:

•COM/NAV 2 field.
•NAV 2 CDI loses deviation bar.

(b) Dual GIA Failure

(i) Remove power from GIA 1 and GIA 2 by pulling the COM 1, COM 2, GPS/NAV 1, and GPS/NAV 2 circuit breakers.

(ii) Verify the following flag invalid:

•COM/NAV 1 and COM/NAV 2 fields flag invalid.
•GPS CDI flags GPS LOI on PFD.
•NAV 1 and NAV 2 CDI loses deviation bar.
•XPDR field flags invalid on PFD.
•Engine instrument field flags invalid on MFD.
•All ADAHRS fields remain valid.

(3) Display Failure Test

(a) MFD Display Failure

(i) Remove power from the MFD by pulling the MFD circuit breaker.

(ii) Verify the following:

•Attitude and Heading remain valid from ADAHRS.
•Airspeed, Altitude, Vertical Speed, and OAT remain valid from the ADAHRS.
•PFD 1 and 2 automatically enter into Reversionary Mode.

(iii) Reset the MFD circuit breaker.

(b) PFD 1 Display Failure

(i) Remove power from PFD 1 by pulling the PFD 1 circuit breaker.

(ii) Verify the following:

•Attitude and Heading remain valid from ADAHRS.
•Airspeed, Altitude, Vertical Speed, and OAT remain valid from the ADAHRS.
•MFD retains engine instrumentation indication.

(iii) Reset the PFD 1 circuit breaker.

(c) PFD 2 Display Failure

(i) Remove power from PFD 2 by pulling the PFD 2 circuit breaker.

(ii) Verify the following:

- Attitude and Heading remain valid from ADAHRS.
- Airspeed, Altitude, Vertical Speed, and OAT remain valid from the ADAHRS.
- MFD retains engine instrumentation indication.

(iii) Reset the PFD 2 circuit breaker.

(4) GRS/GDC Backup Path Test

(a) GRS/GDC 1 Failure

(i) Remove power from PFD 1 and GIA 2 by pulling the PFD 1, COM 2, and GPS/NAV 1 circuit breakers.

(ii) Verify the following:

- Attitude and Heading remain valid from ADAHRS.
- Airspeed, Altitude, and Vertical Speed remain valid from Air Data Computer.
- Engine Instrumentation flags invalid.
- All COM & NAV fields flag invalid.

(iii) Reset the PFD 1, COM 2 and GRS/NAV 1 circuit breakers.

(b) GRS/GDC 2 Failure

(i) Remove power from PFD 2 and GIA 1 by pulling the PFD 1, COM 1, and GPS/NAV 2 circuit breakers.

(ii) Verify the following:

- Attitude and Heading remain valid from ADAHRS.
- Airspeed, Altitude, and Vertical Speed remain valid from Air Data Computer.
- Some engine Instrumentation flags invalid.
- COM1 and NAV1 fields flag invalid.

(iii) Reset the PFD 2, Com 1, and GPS/NAV 2 circuit breakers.

(5) GIA to GIA HSDB Backup Path Test

(a) GIA 1 HSDB Packet Reroute Check:

(i) Ensure the DE ICE BOOTS, PFD 1, PFD 2 and MFD circuit breakers are pushed IN.

(ii) With no bleed air pressure, turn the DE ICE BOOTS On, verify the “DE ICE ON” CAS message displays. Turn the DE ICE BOOTS OFF then verify the CAS message extinguishes.

(iii) Pull the PFD 1 circuit breaker.

(iv) With no bleed air pressure, turn the DE ICE BOOTS ON, verify the "DE-ICE ON" CAS message displays. Turn the DE ICE BOOTS OFF then verify the CAS message extinguishes. Push the PFD 1 circuit breaker back IN.

(v) Pull the PFD 2 and MFD circuit breakers.

(vi) With no bleed air pressure, turn the DE ICE BOOTS ON, verify the "DE ICE ON" CAS message displays. Turn the DE ICE BOOTS OFF then verify the CAS message extinguishes. Push the PFD 2 and MFD circuit breakers back IN.

(b) GIA 2 HSDB Packet Reroute Check:

(i) Ensure the Rudder Trim, Elevator Trim, Aileron Trim, PFD 1, PFD 2 and MFD circuit breakers are pushed in.

(ii) Verify the Trim Disconnect CAS message is not active.

(iii) Push and hold the AP/Trim Disc Switch, verify the TRIM DISC CAS activates. Press the Trim Reset Switch, verify the TRIM DISC CAS extinguishes.

(iv) Pull the PFD 1 circuit breaker.

(v) Push and hold the AP/Trim Disc Switch, verify the TRIM DISC CAS activates. Press the Trim Reset Switch, verify the TRIM DISC CAS extinguishes.

(vi) Push the PFD 1 circuit breaker back in.

(vii) Pull the MFD and PFD 2 circuit breakers.

(viii) Push and hold the AP/Trim Disc Switch, verify the TRIM DISC CAS activates. Press the Trim Reset Switch, verify the TRIM DISC CAS extinguishes.

(ix) Push the PFD 2 circuit breaker back in.g

B. System Checks

(1) GPS Signal

Global Positioning System (GPS) signals are used by multiple aircraft systems that require location information. There are two GPS antennas on top of the airplane. There are two GPS receivers in the system that are incorporated into the Garmin GIA 64. The GIA 64 is also the main processor that interfaces with all other LRUs and controls primary communication and navigation. The GIA 64 units should normally acquire a GPS navigation solution within 5 to 10 minutes of startup, provided the aircraft is outside (or indoors with a GPS repeater).

(a) Select the GPS STATUS page on the MFD.

(b) Using the two softkeys labeled GPS 1 and GPS 2 toggle between GPS 1 and GPS 2. Verify both GPS 1 and GPS 2 are receiving strong signals.

(c) Push the SBAS softkey. Verify that WAAS is checked. Verify the signal strength bars have a "D" inside indicating the GIA is receiving WAAS correctional signals.

Note: If some of the signal strength bars are weak, they may not fill with a "D". This is acceptable if the signal is being obstructed by being inside a hangar or similar.

(2) Communication/Navigation

The primary communication and navigation are controlled by the Garmin GIA 64 which is also the main processor that interfaces with all LRU. There are two GIA 64 units in the airplane.

(a) VHF COM Interference Check

(i) With the airplane outdoors and away from buildings, do the VHF COM Interference Test in accordance with the latest revision of the Garmin G1000 NXi Line Maintenance Manual. Refer the list on page 1 of this chapter.

Note: Doing the test inside a hangar using a GPS repeater may result in a failed test.

(ii) With the COM channel spacing set to 8.33KhZ, Transmit on COM1 on 121.180 MHz and simultaneously transmit on COM2 on 130.285 MHz. Ensure transmissions are clear on both frequencies. Swap frequencies and repeat the previous transmission. Ensure the same results occur.

(3) VOR Testing

Note: Use a Marconi signal generator to simulate VOR frequencies.

(a) Set the signal generator for a VOR frequency (e.g. 108.000 MHz).

(b) Set the RF level on the signal generator for -60dB and the radial to the aircraft heading.

(c) Set the VOR frequency on the PFD to the same frequency as the signal generator.

(d) Connect the generator output to the NAV antenna input on GIA 1.

(e) Select VOR 1 on the PFD HIS. Ensure the CDI is present on the HIS and the TO flag is in view.

(f) Move the CRS pointer on the HIS 10 degrees off the lubber line. Ensure the CDI shows full scale deflection.

(g) Move the CRS pointer 10 degrees off the opposite direction. Ensure the CDI shows full scale deflection in the opposite direction.

(h) Push the CRS knob. Ensure the CRS pointer moves back to the same radial that is on the signal generator and the CDI centers.

(i) Select the FROM radial on the signal generator. Ensure the FROM flag is in view on the HSI.

(j) Select the TO radial on the generator. Set the CRS pointer to 180 degrees opposite the current radial then ensure the FROM flag is in view.

(k) Remove the 30Hz variable signal on the signal generator. Ensure the CDI is no longer visible on the HSI.

(l) Reapply the 30Hz variable signal. Ensure the CDI iv visible on the HSI.

(m) Remove the 30Hz reference signal on the signal generator. Ensure the CDI is no longer visible on the HSI.

(n) Reapply the 30Hz reference signal. Ensure the CDI iv visible on the HSI.

(o) Change the NAV 1 frequency by 0.05MHz up. Ensure the CDI is no longer visible on the HSI.

(p) Change the NAV 1 frequency back to the testing frequency. Ensure the CDI is visible on the HSI.

(q) Change the NAV 1 frequency by 0.05MHz down. Ensure the CDI is no longer visible on the HSI.

(r) Repeat the procedure above for NAV 2.

(4) LOC Testing

Note: Use a Marconi signal generator to simulate LOC frequencies.

(a) Tune NAV 1 to a suitable ILS frequency (Frequency: 108.100 MHz, RF Level: -60dB, SDM: 40%) then ensure that the aircraft heading is within 90 degrees of the simulated ILS approach course.

(b) Set the signal generator to the same frequency tuned on the PFD and connect the RF output to the NAV antenna input on GIA 1. Ensure the signal generator is set to output LOC frequency.

(c) Match the CRS pointer to the lubber line on the HSI.

(d) With the signal generator modulation enabled and carrier on, set the PFD CDI to LOC1. Verify that a deviation bar is present and the appropriate movement is seen as the CRS knob is rotated.

(e) Set the DDM on the signal generator to 0.155 (FLY RIGHT). Verify the deviation bar on the PFD CDI displays two dots to the right of the pointer.

(f) Switch the indication to FLY LEFT and ensure the deviation bar on the PFD CDI displays two dots to the left of the pointer.

(g) Set the DDM on the signal generator to 0.0775 (FLY RIGHT). Verify the deviation bar on the PFD CDI displays one dot to the right of the pointer.

(h) Switch the indication to FLY LEFT and ensure the deviation bar on the PFD CDI displays one dot to the left of the pointer.

(i) Change the NAV1 frequency 0.05 up and 0.05 down from the previously set value and ensure the deviation bar drops off the display.

(j) Repeat the procedure above for NAV2.

(5) G/S Testing

Note: Use a Marconi signal generator to simulate LOC frequencies.

(a) Tune NAV1 to a suitable ILS frequency (Frequency: 109.100 MHz), then ensure the aircraft heading is within 90 degrees of the simulated ILS approach course.

(b) Set the signal generator to output a GS frequency by selecting the LOC/GS Frequency softkey. The frequency displayed will change to 334.7 MHz.

(c) Set the signal generator to the same frequency turned on the PFD then connect the RF output to the G/S antenna input on GIA 1. Ensure the signal generator is set to output G/S frequency.

(d) With the signal generator modulation enabled on carrier on. Set the PFD CDI to LOC1. Verify the G/S strip is displayed to the left of the altitude tape.

(e) Set the DDM on the signal generator to 0.175 (FLY UP). Verify the diamond on the G/S tape is displayed at two dots above the centerline.

(f) Switch the indication to FLY DOWN then ensure the diamond on the G/S tape displays two dots below the centerline.

(g) Set the DDM on the signal generator to 0.0875 (FLY UP). Verify the diamond on the G/S tape is displayed at one dot above the centerline.

(h) Switch the indication to FLY DOWN then ensure the diamond on the G/S tape displays one dot below the centerline.

(i) Change the NAV 1 frequency 0.05 up from the previously set value. Ensure the "NO G/S" indication is present.

(j) Change the NAV 1 frequency 0.05 down from the previously set value. Ensure the G/S tape drops off the display.

(k) Repeat the procedure above for NAV 2.

(6) XM Radio/Weather

The airplane has a Garmin GDL 69A which is a weather receiver with the addition of XM Satellite Radio audio entertainment. The steps in this section verify the installation of the system but do not activate the XM data link. Verify using the XM demo channel.

(a) Refer to the GDL 69A Testing in accordance with the latest revision of the Garmin G1000 NXi Line Maintenance Manual. Refer the list on page 1 of this chapter.

(b) With the XM WX circuit breaker in the OUT position verify the XM demo channel is not available.

(c) Push IN the XM WX circuit breaker

(d) Select the AUX-XM RADIO page on the MFD.

(e) Select the XM Demo Channel.

(f) Plug a set of headphones into the pilot, copilot, and each of the passenger Bose jacks then verify that you can hear the XM radio playing and that the volume adjustment functions properly.

(7) Traffic Advisory System

The airplane has a traffic advisory system that alerts the crew to other aircraft in the area. The primary component of the system is a Garmin GTS 825 which is a microprocessor based LRU that performs active interrogation of Mode S and Mode A/C transponders, as well as passive surveillance of ADS-B data to provide a display of traffic to the MFD and aural alerts.

(a) Mode S and Mode A/C Test

(i) With the TAS circuit breaker in the OUT position verify that the message "Traffic Fail" is displayed over the traffic map.

(ii) Push IN the LEFT WOW circuit breaker.

(iii) Push IN the TAS circuit breaker then verify the traffic interface is active.

(iv) Do the "Ramp Test, Return to Service Test, and Antenna Verification" in accordance with the Garmin GTS Processor Installation Manual.

(v) Do the "Antenna Verification" in accordance with applicable manual listed on page 1 of this chapter.

(b) ADS-B Rx Test

The following steps should be done outside with a clear line of sight to other traffic.

(i) With the TAS and LEFT WOW circuit breakers in the IN position verify the traffic interface is active.

(ii) On the Traffic Page on the MFD select the Operate softkey, followed by the ADS-B softkey to activate the ADS-B data. Lastly select the Flight Id Softkey and verify ADS-B data populates (Flight ID shows up next to the traffic on the map).

(8) Transponder

The airplane has two transponders that are used for identification of the aircraft by other aircraft and by ground stations. Transponder antennas are on the top and bottom of the airplane. The transponder antennas are controlled by two Garmin GTX transponders.

(i) With the airplane in air mode (Indicating >50KIAS) and the XPDR 1 and XPDR 2 circuit breakers in the OUT position verify that no transponder is available.

(ii) Push IN the XPDR 1 circuit breaker then verify transponder 1 is active.

(iii) Push IN the XPDR 2 circuit breaker then verify transponder 2 is active.

(iv) Test GTX 33 in accordance with the latest revision of the Garmin G1000 NXi Line Maintenance Manual for the Epic E1000, P/N 190-02330-01.

(v) Verify the transponders are disabled when aircraft weight is on the wheels.

(9) GTX 335/345 Testing (SN K003 and K004 with SB-0017, K011 and on)

(a) With the aircraft in air mode (indicating >50KIAS or >30kts GS) and the CBs labeled XPDR 1 and XPDR 2 pulled OUT, verify no transponder available.

Note: Ensure the Autopilot is desconnected prior to putting the aircraft into air mode.

(b) Return the aircraft to ground mode (Indicating >50KIAS or >30kts GS).

(c) Verify weight is on wheels and navigate to the Traffic Page on the MFD and unlock the 'GND TEST' softkey by pressing the softkey sequence 3,4,4,3. Press the 'GND TEST' softkey to put the system into Ground Test Mode.

(d) Push IN the CB labeled SPDR 1, verify transponder 1 active.

(e) Push IN the CB lebeled XPDR 2, verify transponder 2 active.

(f) Press the XPDR softkey to enter the transponder menu.

(g) Press the CODE softkey and verify successful entry o f3 distinct squawk codes.

(h) Cycle the transponder through the various modes, and verify the corect annunciation are shown on screen.

(i) Put the aircraft into air mode (Indicating >50KIAS or >30kts GS).

(j) Using a ADSB Test Set, run the auto test and verify that all steps have passed.

This Page Intentionally Left Blank

FLIGHT ENVIRONMENT DATA

1. Description

This section gives information on the components of the navigation system which sense environmental conditions and use the data for navigation.

The two independent Garmin GSU 75 Air Data, Attitude, and Heading Computers which are connected to their own heated pitot tubes and static ports give digital air data for display by the Garmin Integrated Cockpit system. Refer to Chapter 34-20 for removal and installation procedures.

The standby instrument, L3 Aviation Products ESI-500 or Garmin GI 275, gives altitude, attitude, slip/skid, vertical speed, and airplane track if this information is unavailable from the Primary Flight Displays (PFD) or the Multi Flight Display (MFD). Refer to Chapter 34-20 for removal and installation procedures.

Note: The static system and altimeter must be verified every 2 years in accordance with 14 CFR 91.411 and Part 43 Appendix E.

A. Pitot-Static System Design Overview

The E1000 Pitot-static system consists of two (2) independent pitot probes, two (2) independent static ports, two (2) ADAHRS units, and one (1) backup standby unit. Figure 34-10.1 Pitot/Static System Schematic shows a functional schematic of the pitot and static systems. The pneumatic components are connected via flexible nylon tubing and contain drains within each line. The Pitot probes are electrically heated to prevent malfunctions due to icing and the static ports are located such that static pressure measurements are not altered when the aircraft encounters icing conditions.

The Air Data System measures aircraft static and impact pitot pressure using pressure transducers and raw air temperature from an outside temperature probe. This information is used to compute pressure altitude, vertical speed, airspeed values, air temperature and density altitude. The air pressures are carried via pneumatic lines from the various sensors to pilot side and co-pilot side ADAHRS (Air Data, Attitude, & Heading Reference System), as well as to the standby instrument.

Nylon tubing is used for the pitot and static system installations. The tubing is abrasion resistant, heat and light stable, chemically resistant and made from resins that are high strength and water absorption resistant. The tubing is either NN-4-040 or N-4-040-BLU Nylon Flexible Tubing. Water trap/drains are located at each wing root for the pitot tubes and under the floor of the passenger compartment for the static ports. Each tube is located at the lowest point in the system with the airplane at a level attitude.

Figure 34-10.1: Pitot/Static System Schematic

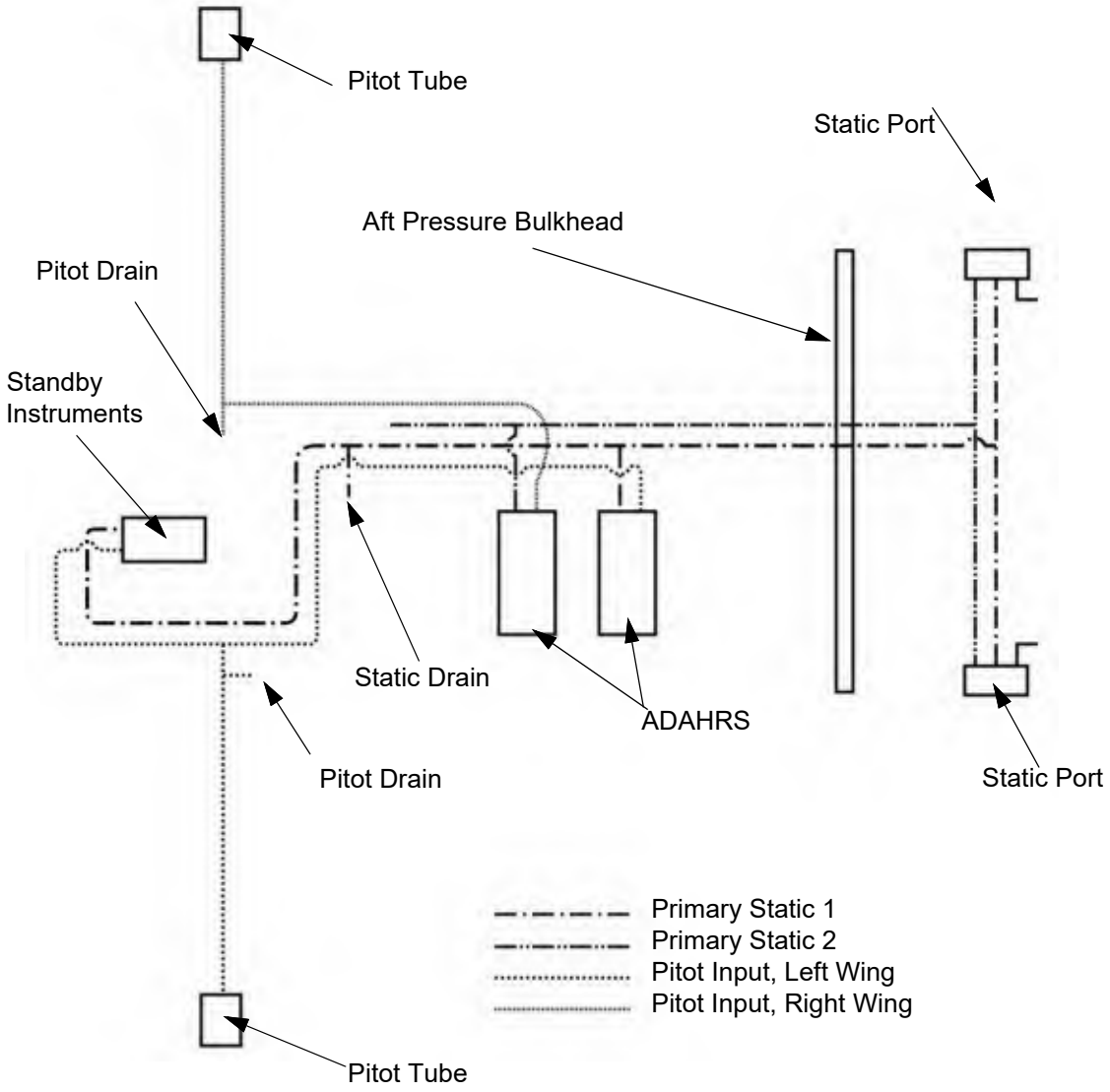

B. Pitot Pressure System

The E1000 has two (2) independent pitot pressure systems which have integrated heating elements in each tube. Pitot-pressure is obtained through the pitot tube. The pitot pressure is a measure of ram air pressure, created by the forward motion of the aircraft. The pitot tubes are located on the under-side of each wing facing forward. The opening of the tube is exposed to the relative wind. As the airspeed increases, the ram air pressure also increases and is translated to the airspeed indicator.

The pitot tube on the left wing provides dynamic pressure to the ADAHRS #1 and the Standby Instruments. The pitot tube on the right wing provides dynamic pressure to the ADAHRS #2.

The system primarily operates passively with the exception of the pitot heat function. Pitot heat is engaged by the pilot by activating the PITOT STALL HT switch located below the right side of the Primary Flight Display (PFD). When the PITOT STALL HT switch is in the ON position, the heat is continuously on. The weight-on-wheels switch controls an on-ground relay which in turn controls the temperature of the heating elements. When on the ground, the hearing elements are approximately half as warm as they are in the air. This is to protect against an over-temperature of the surrounding carbon skin. If the on-ground relay becomes stuck in the closed position, the heating elements will remain at reduced heat during flight and the "L/R STL HT RLY FL" CAS message will be displayed.

If the Pitot heat switch is placed in the "OFF" position, the E1000 Crew Alert System presents a CAS message on the PFD stating "PITOT HEAT OFF," accompanied by a single tone and illumination of the Master Caution indicator in an amber color directly in front of the pilot. Similarly, if either the left or right Pitot probe fails to function, a CAS message stating "LEFT PITOT HEAT FAIL" or "RIGHT PITOT HEAT FAIL" will be displayed on the PFD accompanied by the same tone and Master Caution illumination.

C. Static Pressure System

The Epic E1000 has two (2) independent, unheated static ports as the primary static system. There is not alternate static system on the E1000. The static pressure is obtained through the static ports. The static ports are located on both sides of the fuselage, aft of the wing in an area of smooth airflow and not susceptible to water or ice accumulation.

Each static pressure system is assigned its own separate Air Data Computer (GSU 75). Static system 1 is connected to ADAHRS #1 which reports to the pilot PFD and the Standby Instruments. Static system 2 is connected to the ADAHRS #2 which reports to the co-pilot PFD. The static ports are flush-mounted hole(s) on the fuselage of the airplane where the air-flow is relatively undisturbed.

2. Maintenance Practices

A. Pitot Tube Assembly

Pitot tubes are mounted on both the left and right wings on the outboard undersides and provide ram air data. The pressure collected is transferred through tubing and is converted into digital data by the Garmin GSU 75 Air Data, Attitude, and Heading Computers which then provide airspeed indication for the pilot and copilot. The left wing pitot tube ties into the backup attitude, airspeed, altitude, and slip indicator for emergency operation. Each pitot tube has electro-thermal deicing elements.

Note: Removal and installation procedures for both pitot tube assemblies are similar.

(1) Removal

(a) Set the BATT 1 and BATT 2 switches to OFF.

(b) Remove all external electrical power to the airplane (refer to Chapter 24-40).

(c) Pull and collar the L PITOT HEAT or R PITOT HEAT circuit breaker, as applicable.

(d) If radar pod is equipped, pull and collar the WEATHER RADAR circuit breaker

(e) Remove the screws attaching the pitot tube panel mount to the wing then carefully lower the panel.

(f) Disconnect the pitot heat electrical harness from the pitot tube.

(g) Disconnect the ram air pitot line (blue). Cap or plug the line to prevent contamination from entering the system.

(h) Remove the pitot tube panel mount from the pitot tube.

(2) Installation

(a) Align the pitot tube panel mount holes with the pitot tube then attach it using screws.

(b) Connect the pitot heat electrical harness.

(c) Connect the ram air line to the pitot tube. Do not over tighten the fitting.

(d) Attach the pitot tube panel mount assembly to the wing using screws.

(e) Do a pitot static system leak test.

(f) Reset the L PITOT HEAT or R PITOT HEAT circuit breaker, as applicable, then do a pitot heat test.

(g) If radar pod is equipped, reset the WEATHER RADAR circuit breaker.

B. Static Ports

There are static ports on the left and right sides of the fuselage just aft of the pressure bulkhead. They provide a static air source for navigation instruments and the cabin pressurization system. The static ports are connected to the instruments and outflow valves using nylon tubing. The tubing has water traps with drain plugs at the low points of the system for moisture removal.

(1) Removal

(a) Set the BATT 1 and BATT 2 switches to OFF.

(b) Disconnect external electrical power from the airplane (refer to Chapter 24-40).

(c) Remove the Pressure Bulkhead Access Panel (refer to Chapter 21-30).

(d) Disconnect the tubing from the static port.

(e) Install protective covers on the tubing and fittings on the static port.

(f) Carefully score the surface of the paint at the edge of the circumference of the static port. Use caution not to cut into the carbon fiber.

Note: This is to help minimize paint damage when removing the static port.

CAUTION: Monitor the temperature of the fuselage skin and DO NOT exceed 270°F (132°C).

(g) Using a heat gun, carefully heat the static port to 260° F (127°C).

Note: Apply heat until the epoxy begins to soften.

(h) Using soft jawed pliers, carefully apply a twisting force to the static port parallel to the fuselage skin to break the bond of the adhesive.

(i) Remove the static port from the fuselage.

(j) If installing a new static port, remove the fittings from the static port.

(k) Remove any residual adhesive from the fuselage. If using sandpaper use caution not to sand into the carbon layers.

(2) Installation

(a) If installing a new static port, install the fittings in the static port using Loctite 565.

Note: The fittings are oriented differently on the left and right sides, refer to Figure 34-10.2 sheet 1.

(b) Hand tighten the fittings in the static port (approximately 4 threads engagement). Continue tightening until correct orientation is achieved or to a maximum of 7 threads of engagement.

(c) Clean the mounting surfaces with isopropyl alcohol.

(d) Mask the area on the fuselage around the static port to aid with the cleanup of excess adhesive.

CAUTION: Use only Loctite EA 9630 Aero, Loctite EA 9394 Aero, or Loctite EA 9394.3 Aero for installation of the static port.

(e) Apply adhesive to the fuselage and static port according to the manufacturer's instructions.

(f) Install the static port in the fuselage.

Note: Orient the static port in the fuselage as shown in Figure 34-10.2 sheet 1.

(g) Remove the masking tape and clean off excess adhesive.

(h) Cure the adhesive according to the manufacturer's instructions.

(i) Remove the protective covers from the tubing and static port.

(j) Connect the tubing to the static port as shown in figure 34-10.2 sheet 1.

(k) Do Chapter 34-10. 2. F. Pitot Static System Leakage Test.

(l) RVSM aircraft: Do the static port step height check (refer to 34-10.2.J.1.c).

(m) Install the Pressure Bulkhead Access Panel (refer to Chapter 21-30).

C. Pitot and Static Plumbing

(1) Removal

(a) Set the BATT 1 and BATT 2 switches to OFF.

(b) Remove all external electrical power to the airplane (refer to Chapter 24-40).

(c) Remove the crew and/or passenger seats, as required. Refer to Chapter 25-10 and 25-20.

(d) Remove the belly panels (refer to Chapter 57-10), wing leading edge access panels (refer to Chapter 6), carpet (refer to Chapter 25-10 and 25-20), flooring (refer to Chapter 53-20), interior side panels (refer to Chapter 25-50), and pressure bulkhead access panel (refer to Chapter 21-30), as necessary.

(e) Unfasten any clamps attaching the tubing to be removed.

(f) Remove the tubing, as applicable.

(g) Cap or plug all open connections to keep contamination out of the system.

(2) Installation

(a) Install the tubing, as applicable.

Note: Seal all pipe thread joints using Loctite™ 567. Tighten the fittings by hand plus 1-1/2 to 3 turns.

Note: Wet set bulkhead fittings using RTV 100. Tighten jam nuts by hand plus 1/4 to 1/2 turn.

Note: Install plastic compression nuts for all compression fittings hand tight plus 1-1/2 to 2 turns.

(b) Attach the tubing using clamps.

(c) Test the pitot static system for correct operation and inspect the plumbing and fittings for security and leaks.

(d) Re-install the pressure bulkhead access panel (refer to Chapter 21-30), interior side panels (refer to Chapter 25-50), flooring (refer to Chapter 53-20), carpet (refer to Chapter 25-10 and 25-20), wing leading edge access panels (refer to Chapter 6), and belly panels (refer to Chapter 57-10), as applicable.

(e) Re-install the crew and/or passenger seats, as applicable. Refer to Chapter 25-10 and 25-20.

D. Pitot and Static System Drains

The pitot moisture drains are located at the forward of the wing root of both wings. The static moisture drains are located under the floor of the passenger compartment. Refer to Figure 34-10.1: Pitot Static System. Pitot system tubing is blue.

(1) Removal

(a) Set the BATT 1 and BATT 2 switches to OFF.

(b) Remove all external electrical power to the airplane. Refer to Chapter 24-40.

(c) Remove the belly panels to access the pitot drains. Refer to Chapter 57-10.

(d) Remove the carpet and flooring of the passenger cabin to access the static drains. Refer to Chapter 25-20 and 53-20.

(e) If moisture is present disconnect the drain tube from the tee fitting.

(f) Clean or replace the drain tube.

(g) Cap or plug all open connections to keep contamination out of the system.

(2) Installation

(a) Ensure the tee fitting and drain tube are clean and free of debris.

(b) Attach the drain tube to the tee fitting. Hand tighten the compression nut snug plus 1-1/2 to 2 turns.

(c) Do Chapter 34-10. 2. F. Pitot Static System Leakage Test.

(d) Re-install the flooring and carpet of the passenger cabin, as applicable. Refer to Chapter 25-20 and 53-20.

(e) Re-install the belly panels, as applicable. Refer to Chapter 57-10.

E. Pitot Static System Inspection and Purging

Pitot static system plumbing must be kept clear and free from obstructions with all connections tight. For removal of any accumulated moisture, the pitot plumbing has a water trap and a drain at each wing root. The static plumbing has a water trap and drain at the lowest point in the system under the passenger cabin floor. Refer to Figure 34-10.1: Pitot Static System. Pitot tubing is blue.

(1) Inspect the pitot inlets and static ports for dents, damage, and obstructions restricting air flow.

(2) Remove the passenger compartment carpet and floor. Refer to Chapter 25-10 and 53-20.

(3) Remove the airplane belly panels. Refer to Chapter 57-10.Make note of the pitot and static lines and connection points for reconnection then disconnect the pitot and static lines from the two GSU 75 and the ESI-500. Cap off the two GSU 75 and the ESI-500.

(4) Remove the plugs from the pitot drain ports located within the forward wing roots and the static drain ports under the passenger compartment floor. Refer to Figure 34-10.1.

(5) Blow clean low-pressure air from the disconnected lines at the GSU 75s and the ESI-500. This will force any moisture out of the system through the tubing drains.

(6) Re-install the plugs into the drains.

(7) Reconnect the pitot and static lines to the GSU 75s and the ESI-500.

(8) Do Chapter 34-10. 2. F. Pitot Static System Leakage Test.

(9) Re-install the flooring and carpet of the passenger cabin, as applicable. Refer to Chapter 25-20 and 53-20.

(10) Re-install the belly panels (refer to Chapter 57-10), as applicable.

F. Pitot Static System Leakage Test

Perform the following test on both the left and right side systems, one side at a time.

(1) Connect a Barfield DPS1000 or similar Digital Air Data Test Set to the left side static port and the left side pitot tube of the airplane using a Nav-Aids, LTD., Air Data Accessories Kit, Model No. EPIC1000-945.

(2) Block the right side static port using masking tape or similar.

(3) Command the test set to simulate a differential pressure of 6.8 psi.

(4) Turn off the vacuum pump and observe the indicated altitude measurement for the system.

(5) Observe the indicated altitude measurement on the correlating PFD and Standby Instrument for 1 minute then record the altitude loss.

(6) Verify the indicated altitude measurement does not decrease by more than 200 feet.

(7) Command the test set to simulate an airspeed of 240 kts.

(8) Turn off the pressurization and observe the airspeed indicator on the correlating PFD and Standby Instrument for 1 minute then record the leak rate.

(9) Verify the indicated airspeed decreases less than 2 kts.

(10) Vent the pitot and static pressures to atmosphere.

(11) Disconnect the air data test set from the left side static port and the left side pitot tube

(12) Connect a Barfield DPS1000 or similar Digital Air Data Test Set to the right side static port and the right side pitot tube of the airplane using a Nav-Aids, LTD., Air Data Accessories Kit, Model No. EPIC1000-945.

(13) Block the left side static port using masking tape or similar.

(14) Repeat steps (c) through (j), above.

(15) Disconnect the air data test set from the right side static port and the right side pitot tube

(16) If the test indicates a leak, check all connections for tightness and repair faulty components.

G. Altimeter System Test and Inspection

For these tests connect a Barfield DPS1000 or similar Digital Air Data Test Set (ADTS) to the airplane using a Nav-Aids, LTD., Air Data Accessories Kit, Model No. EPIC1000-945.

(1) Scale Error

(a) With the barometric pressure scale at 29.92 inches of mercury subject the altimeter successively to pressures corresponding to the altitude specified in the table below up to the maximum normally expected operating altitude of the E1000 airplane.

(b) Make the reduction in pressure at a rate not in excess of 20,000 feet per minute to within approximately 2,000 feet of the test point. Approach the test point at a rate compatible with the test equipment.

(c) Keep the altimeter at the pressure corresponding to each test point for at least 1 minute, but not more than 10 minutes, before a reading is taken.

(d) The error at all test points must not exceed the tolerances specified in the table below.

(e) Acceptable tolerance between the Indicated Altitude on the PFD #1, PFD #2 and the Standby Instrument is ± 50 ft.

Table 34-10.1: Altitude Tolerance

Altitude (ft)	Indicated with SSEC Correction (ft)	Equivalent Pressure (inches of mercury)	Tolerance ± (ft)
-1000	-987	31.018	20
0	13	29.921	20
500	514	29.385	20
1000	1014	28.856	20
1500	1514	28.335	25
2000	2014	27.821	30
3000	3015	26.817	30
4000	4015	25.842	35
8000	8021	22.225	60
10000	10026	20.577	80
12000	12030	19.029	90
14000	14035	17.577	100
16000	16040	16.216	110

18000	18044	14.942	120
20000	20047	13.750	130
22000	22050	12.636	140
25000	25056	11.104	155
30000	30067	8.885	180
35000	35080	7.041	205

(2) Hysteresis

(a) Begin the hysteresis test not more than 15 minutes after the altimeter's initial exposure to the pressure corresponding to the upper limit of the scale error test above. While the altimeter is at this pressure, the hysteresis test shall commence.

(b) Increased pressure at a rate simulating a descent in altitude at the rate of 5000 to 20000 feet per minute until within 3000 feet of the first test point (50 percent of maximum altitude). Then approach the test point at a rate of approximately 3000 feet per minute.

(c) Keep the altimeter at this pressure for at least 5 minutes, but not more than 15 minutes, before the test reading is taken.

(d) After the reading has been taken increase the pressure further, in the same manner as before, until the pressure corresponding to the second test point (40 percent of maximum altitude) is reached.

(e) Keep the altimeter at this pressure for at least 1 minute, but not more than 10 minutes, before the test reading is taken.

(f) After the reading has been taken increase the pressure further, in the same manner as before, until atmospheric pressure is reached.

(g) The reading of the altimeter at either of the two (2) test points must not differ by more than the tolerance specified in the table below from the reading of the altimeter for the corresponding altitude recording during the scale error test above.

(3) After Effects

(a) Not more than 5 minutes after the completion of the hysteresis test above, the reading of the altimeter (corrected for any change in atmospheric pressure) must not differ from the original atmospheric pressure reading by more than the tolerance specified in the table below.

(4) Case Leak

The leakage of the altimeter case, when the pressure within it corresponds to an altitude of 18,000 feet, must not change the altimeter reading by more than the tolerance shown in the table below during an interval of 1 minute.

Table 34-10.2: Test Tolerances

Test	**Tolerance (ft)**

Case Leak Test	±100
Hysteresis Test	
First Test Point (50% of maximum altitude)	75
Second test Point (40% of maximum altitude)	75
After Effect Test	30

(5) Static Port Vertical Speed (Rate of Climb) Test

(a) Command the ADTS to change the altitude at the rates shown in the table below.

(b) Wait for the ADTS to report that target rates have been achieved.

(c) Verify that the Rate of Climb reported by the Vertical Speed field on the PFD is within the tolerances specified in the table below.

Table 34-10.3: Rate of Climb Tolerance

Vertical Speed (ft/min)	Allowable Tolerance (± ft/min)
4000	100
2000	100
1000	50
500	45
200	45
0	45
-200	45
-500	45
-1000	50
-2000	100
-4000	100

H. Pitot Static Airspeed Test

For this test connect a Barfield DPS1000 or similar Digital Air Data Test Set to the airplane in accordance with the Test Set manufacturers instructions. After the test is completed disconnect the Test Set in accordance with the Test Set manufacturers instructions.

(1) Command the Test Set to simulate an altitude of 10000 ft.
(2) Command the Test Set to simulate air speeds shown in the table below.
(3) Wait for the Test Set to report the target values have been achieved. Document the Indicated Air Speed (IAS) for each Air Data Computer (ADC) and the Standby Instrument.
(4) Acceptable tolerance between Calibrated Air Speed and Indicated Airspeed is ± 1 kt.
(5) Acceptable tolerance between ADC #1, ADC #2, and the Standby Instrument is ± 1 kt.

Table 34-10.4: Pitot Static Airspeed Test

Calibrated Air Speed (CAS) kts	Indicated with SSEC Correction kts	Indicated Air Speed (IAS) ADC #1 kts	Standby Instrument kts	Indicated Air Speed (IAS) ADC #2 kts
60	61			
65	66			
70	71			
75	76			
80	81			
85	86			
90	91			
95	96			
100	101			
105	106			
110	111			
115	117			
120	122			
125	127			
130	132			
135	137			

Calibrated Air Speed (CAS) kts	Indicated with SSEC Correction	Indicated Air Speed (IAS) ADC #1 kts	Standby Instrument kts	Indicated Air Speed (IAS) ADC #2 kts
140	142			
145	147			
150	152			
155	157			
160	162			
165	167			
170	172			
175	178			
180	183			
185	188			
190	193			
195	198			
200	203			
205	208			
210	213			
215	218			
220	223			
225	228			
230	233			
235	238			
240	243			
245	248			
250	253			
255	258			
260	263			

Calibrated Air Speed (CAS) kts	Indicated with SSEC Correction	Indicated Air Speed (IAS) ADC #1 kts	Standby Instrument kts	Indicated Air Speed (IAS) ADC #2 kts
265	268			
270	273			

I. Pitot Heat and Pitot Heat Current Sensor Operational Check

(1) Remove the pitot tube covers if present.

(2) Make sure the L PITOT HEAT, L PITOT HT CTRL, R PITOT HEAT, and R PITOT HT CTRL circuit breakers are closed and the L STALL HEAT and R STALL HEAT circuit breakers are open.

(3) Make sure the airplane is in the weight-on-wheels configuration.

(4) Connect a ground power unit to the airplane (refer to chapter 24-40).

(5) Set the BATT 1 and BATT 2 switches to ON.

(6) Make sure the PITOT HEAT OFF CAS message is present and the L PITOT HT FAIL and R PITOT HT FAIL CAS messages are not present.

CAUTION: To prevent damage, make sure pitot/stall heat is not on for longer than 5 minutes in ground mode.

(7) Set the PITOT STALL HT switch to ON.

(8) Make sure the PITOT HEAT OFF CAS message extinguishes and the L PITOT HT FAIL and R PITOT HT FAIL CAS messages are not present.

(9) Set the PITOT STALL HT switch to off.

(10) Put the airplane in a weight-off-wheels configuration.

CAUTION: To prevent damage, make sure pitot/stall heat is not on for longer than 10 seconds in air mode.

(11) Set the PITOT STALL HT switch to ON.

(12) Make sure the PITOT HEAT OFF CAS message extinguishes and the L PITOT HT FAIL and R PITOT HT FAIL CAS messages are not present.

(13) Set the PITOT STALL HT switch to off.

(14) Set the BATT 1 and BATT 2 switches to off.

(15) Disconnect the ground power unit from the airplane (refer to chapter 24-40).

(16) Put the airplane back in a weight-on-wheels configuration.

Figure 34-10.1: Pitot Static System (Sheet 1 of 8)

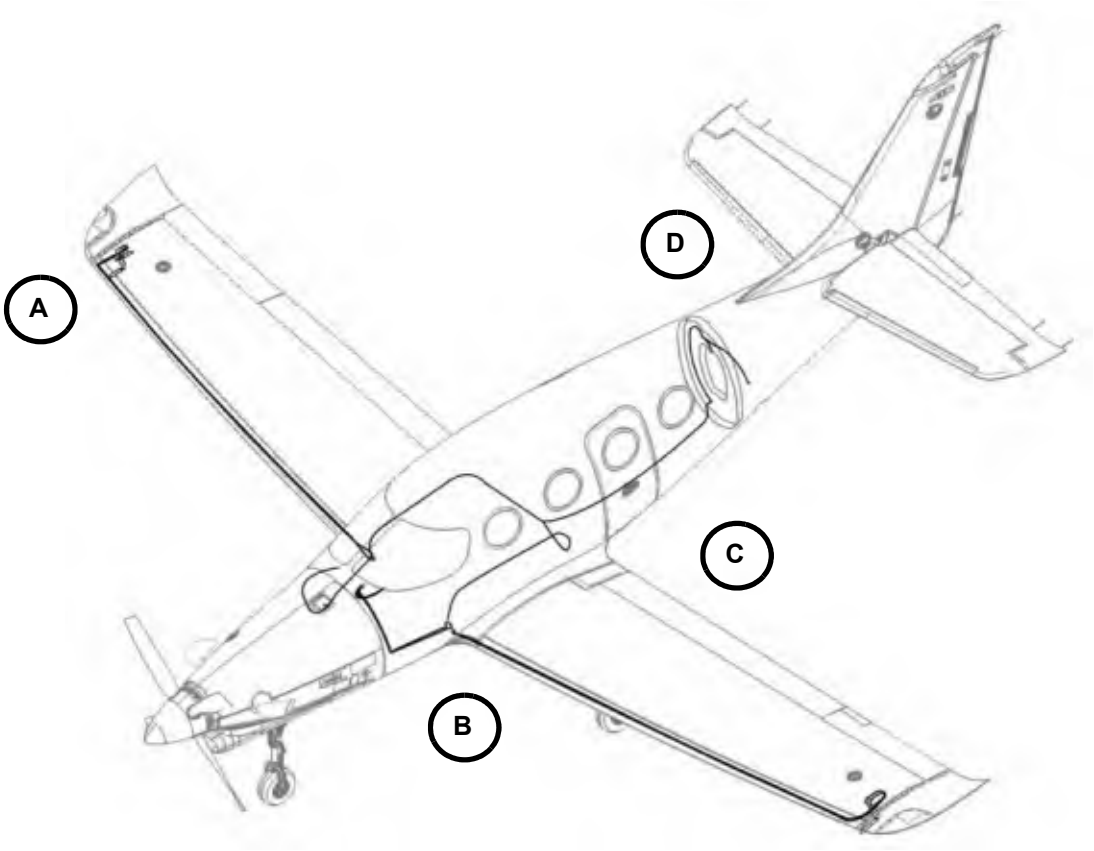

LEGEND

1. Pitot Tube
2. Access Panel
3. Static Port
4. Flexible Tubing
5. Y Fitting
6. Swivel Elbow
7. Elbow
8. 1/4 tube to 1/8 NPT Adapter
9. Bulkhead Fitting
10. Union Fitting
11. Push Connect Fitting
12. Tee Fitting
13. 3-Way Electronic Valve
14. Coupler
15. Screw
16. Washer
17. Lock Washer
18. Plug

Figure 34-10.1: Pitot Static System (Sheet 2 of 8)

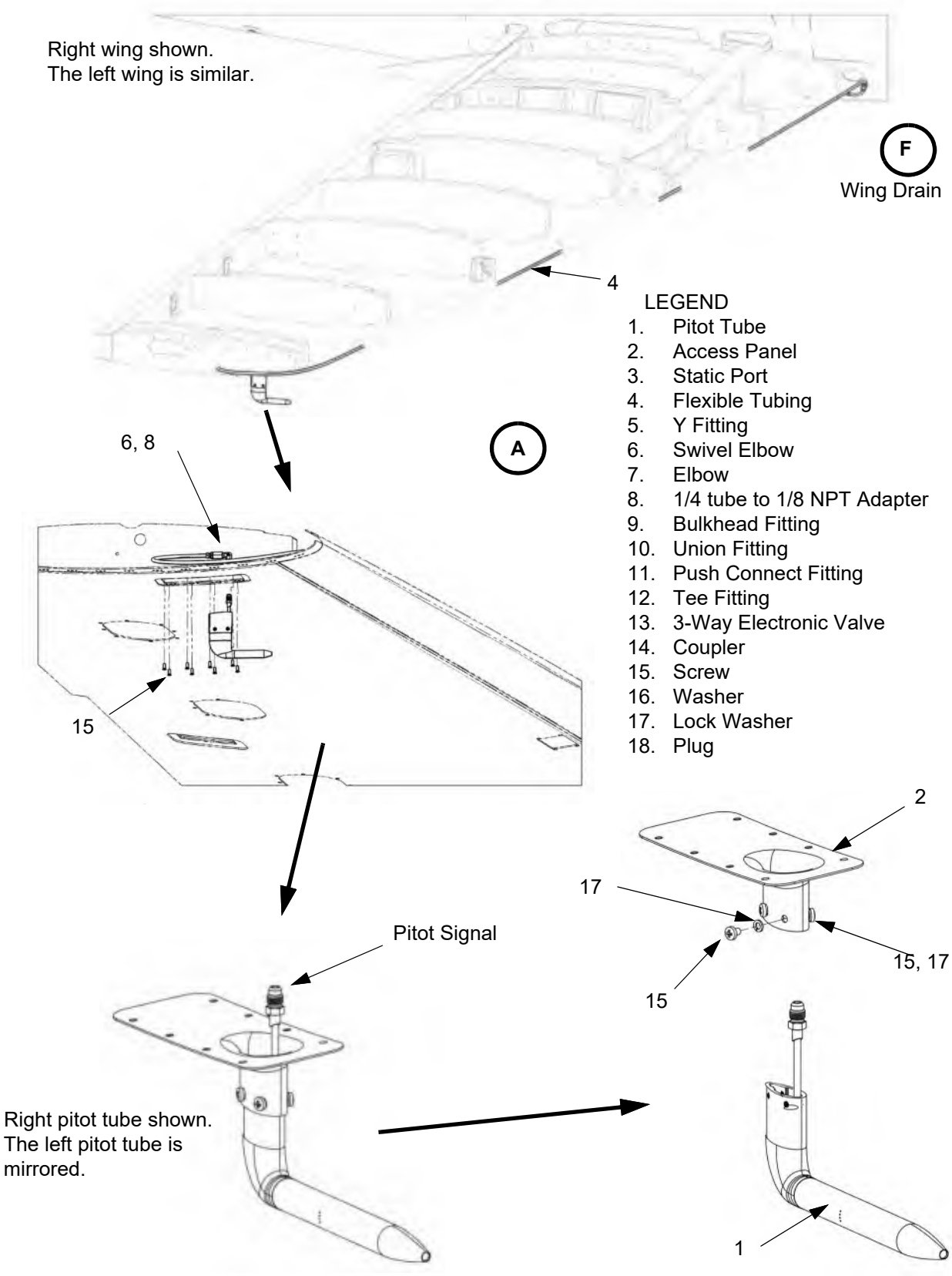

Figure 34-10.1: Pitot Static System (Sheet 3 of 8)

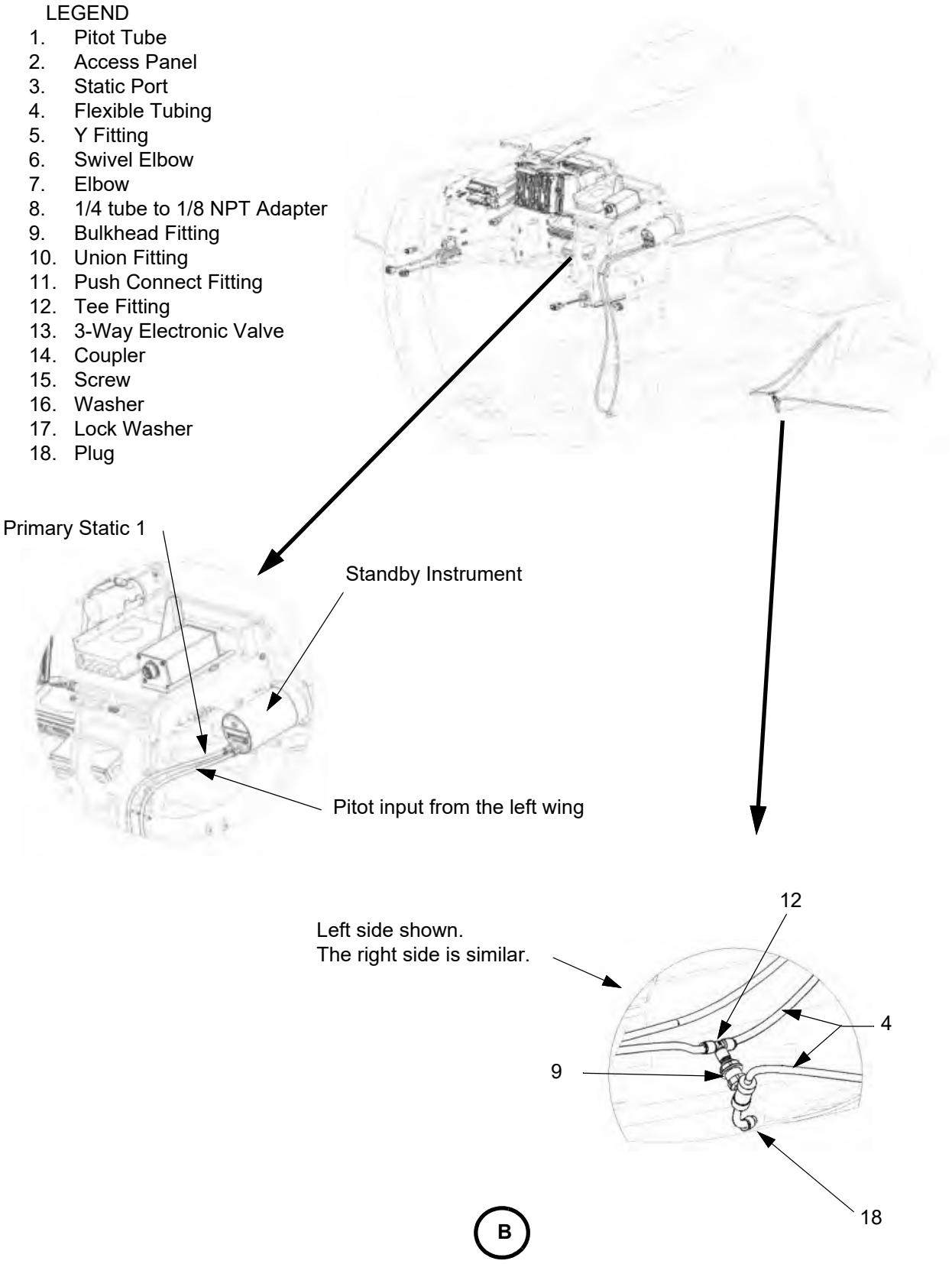

Figure 34-10.1: Pitot Static System (Sheet 4 of 8)

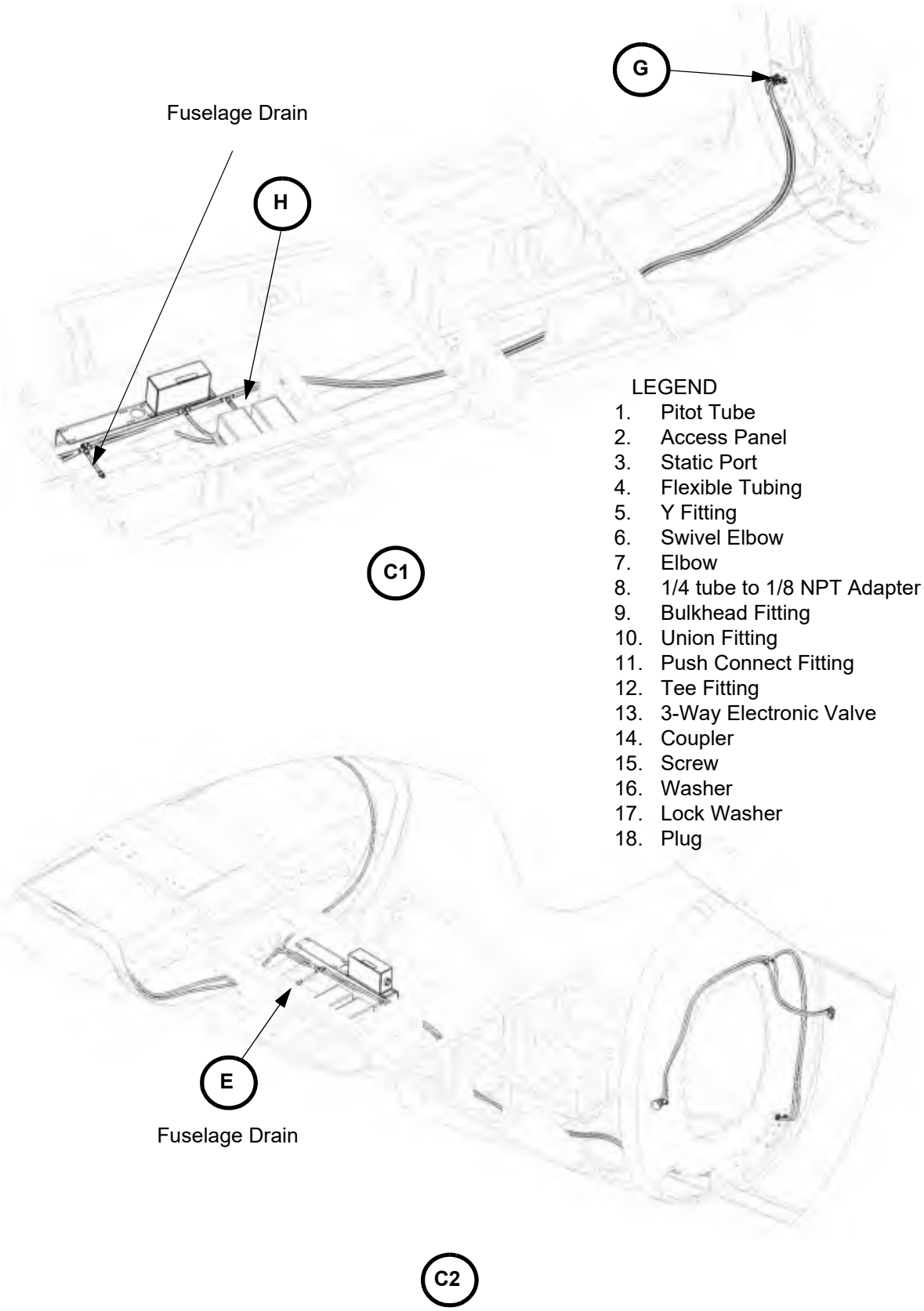

LEGEND

1. Pitot Tube
2. Access Panel
3. Static Port
4. Flexible Tubing
5. Y Fitting
6. Swivel Elbow
7. Elbow
8. 1/4 tube to 1/8 NPT Adapter
9. Bulkhead Fitting
10. Union Fitting
11. Push Connect Fitting
12. Tee Fitting
13. 3-Way Electronic Valve
14. Coupler
15. Screw
16. Washer
17. Lock Washer
18. Plug

Figure 34-10.1: Pitot Static System (Sheet 5 of 8)

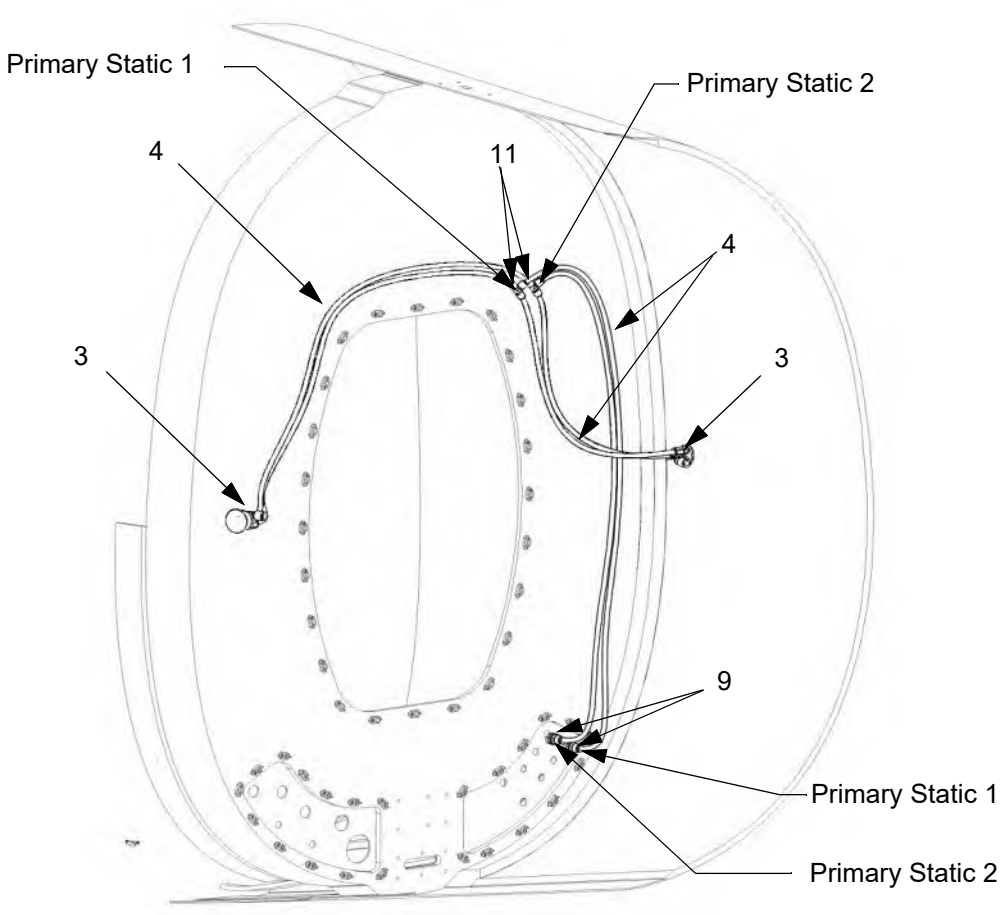

LEGEND

1. Pitot Tube
2. Access Panel
3. Static Port
4. Flexible Tubing
5. Y Fitting
6. Swivel Elbow
7. Elbow
8. 1/4 tube to 1/8 NPT Adapter
9. Bulkhead Fitting
10. Union Fitting
11. Push Connect Fitting
12. Tee Fitting
13. 3-Way Electronic Valve
14. Coupler
15. Screw
16. Washer
17. Lock Washer
18. Plug

Figure 34-10.1: Pitot Static System (Sheet 6 of 8)

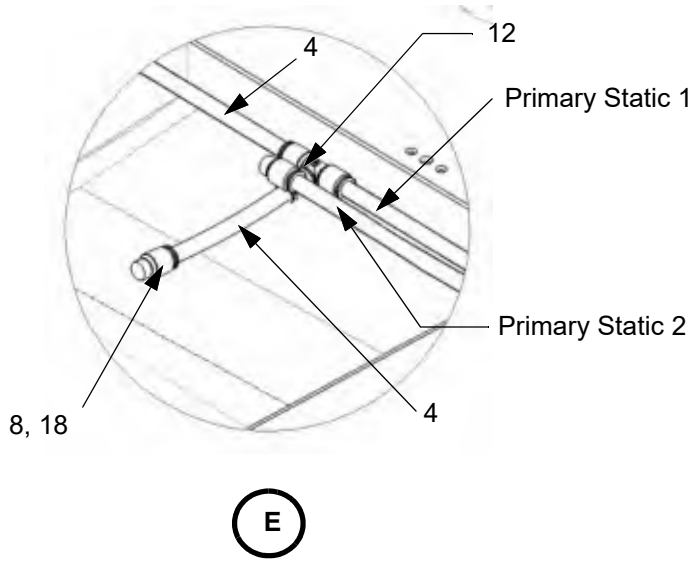

LEGEND
1. Pitot Tube
2. Access Panel
3. Static Port
4. Flexible Tubing
5. Y Fitting
6. Swivel Elbow
7. Elbow
8. 1/4 tube to 1/8 NPT Adapter
9. Bulkhead Fitting
10. Union Fitting
11. Push Connect Fitting
12. Tee Fitting
13. 3-Way Electronic Valve
14. Coupler
15. Screw
16. Washer
17. Lock Washer
18. Plug

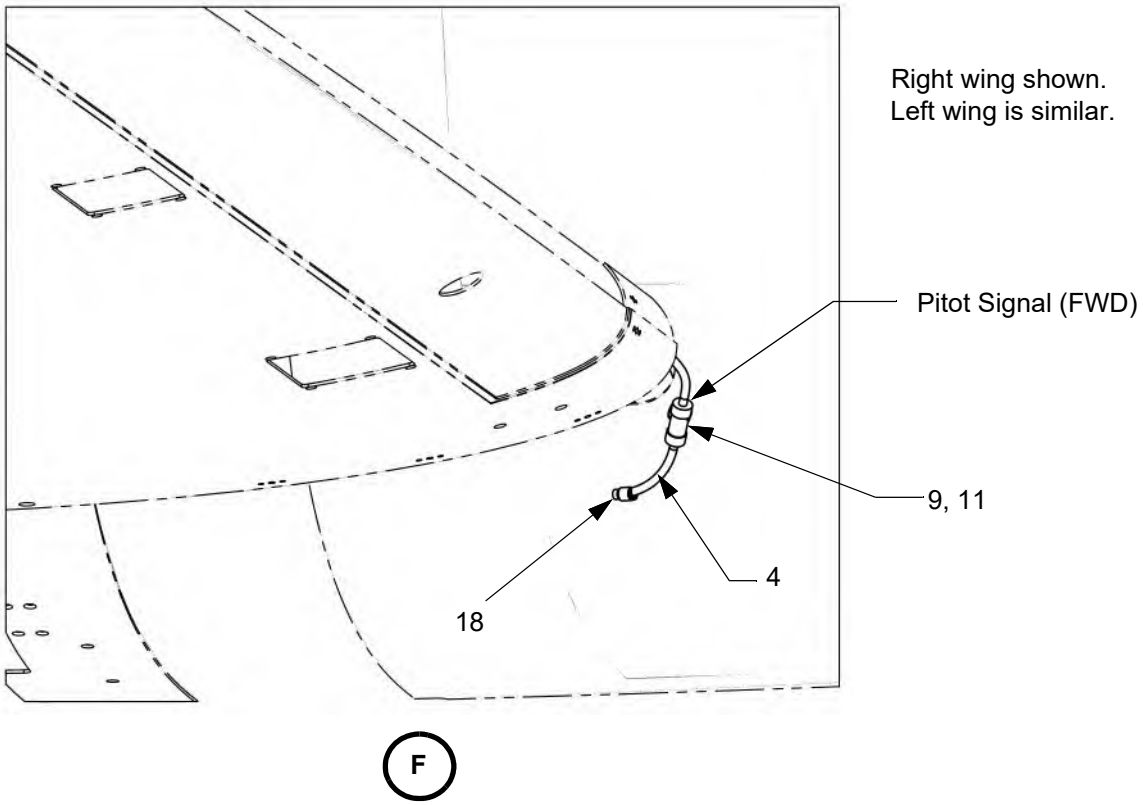

Figure 34-10.1: Pitot Static System (Sheet 7 of 8)

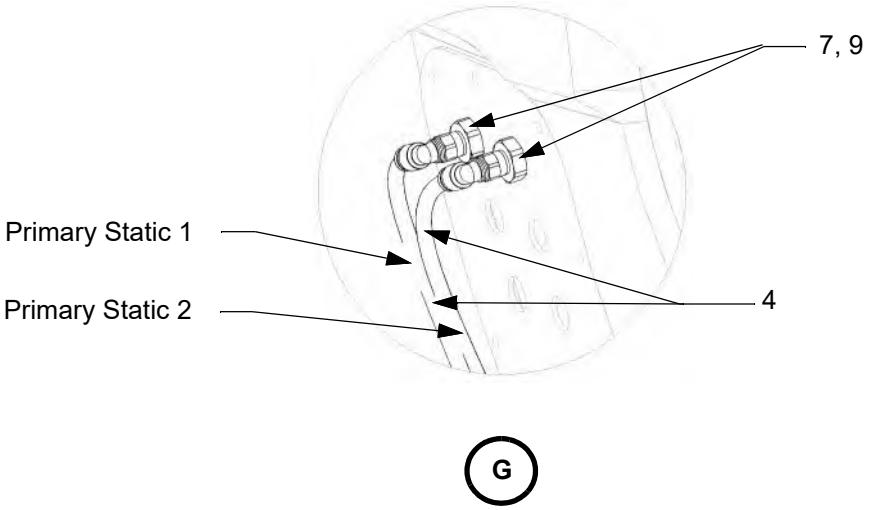

LEGEND

1. Pitot Tube
2. Access Panel
3. Static Port
4. Flexible Tubing
5. Y Fitting
6. Swivel Elbow
7. Elbow
8. 1/4 tube to 1/8 NPT Adapter
9. Bulkhead Fitting
10. Union Fitting
11. Push Connect Fitting
12. Tee Fitting
13. 3-Way Electronic Valve
14. Coupler
15. Screw
16. Washer
17. Lock Washer
18. Plug

Figure 34-10.1: Pitot Static System (Sheet 8 of 8)

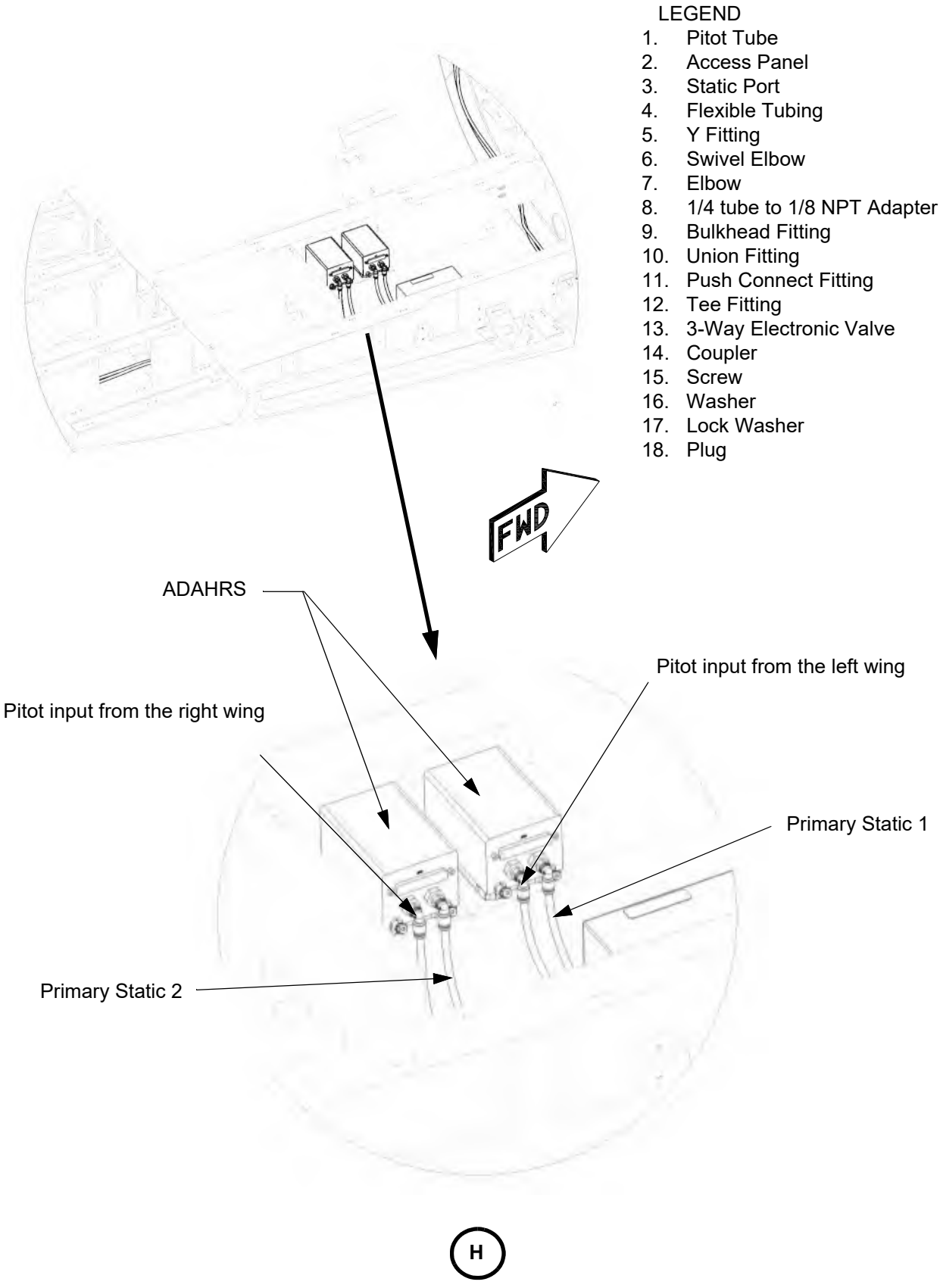

Figure 34-10.2: WX Radar Pitot Probe Install

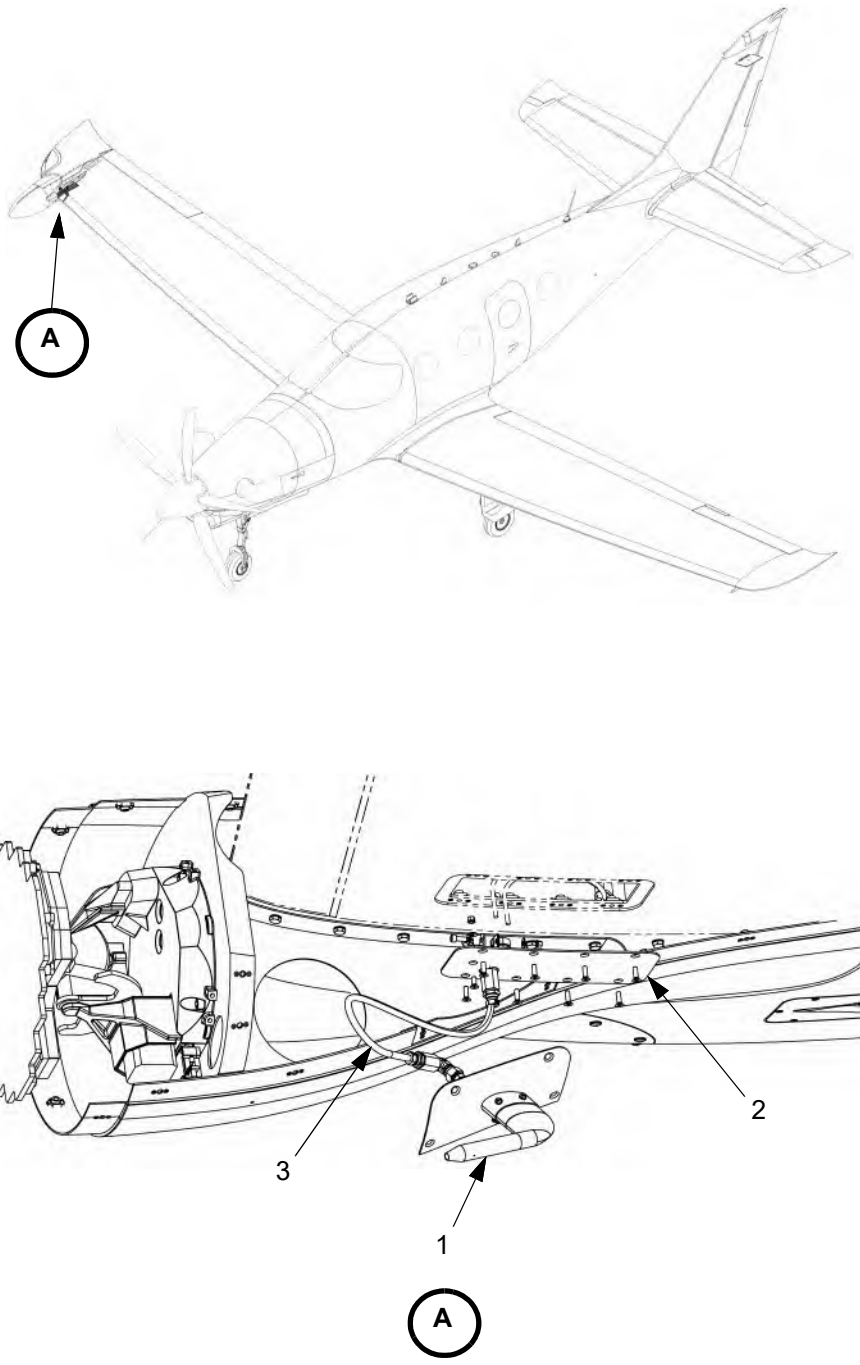

(Inboard radar pod fairing not shown for clarity.)

LEGEND
1. Pitot Tube Assembly
2. Pitot Passthrough Plate
3. Ram Air Pitot Line

J. RVSM

(1) Inspection/Check

Note: Contact Epic Aircraft if any criteria are not met.

(a) Verify the following parts are installed:

(i) #1 ADAHRS: Garmin GSU 75B, PN: 011-03094-40

(ii) #2 ADAHRS: Garmin GSU 75B, PN: 011-03094-40

(iii) #1 PFD: Garmin GDU 1050A, PN: 011-03470-10

(iv) #2 PFD: Garmin GDU 1050A, PN: 011-03470-10

(v) Autopilot: STEC 2100 DFCS, PN: 01304-02-01-016

or: Garmin GFC 700 AFCS, PN: 011-01020-10

(vi) #1 Transponder: Garmin GTX 33D w/ES, PN: 011-00779-21

or: Garmin GTX 345DR, PN: 010-01776-00

(vii) #2 Transponder: Garmin GTX 33D w/ES, PN: 011-00779-21

or: Garmin GTX 335DR, PN: 010-01774-00

(b) Do the test of the Air Data and Altitude Alert Systems as follows:

(i) Connect a Barfield DPS1000 or similar Digital Air Data Test Set to the airplane in accordance with the Test Set manufacturers instructions.

(ii) Connect external electrical power to the airplane. Refer to Chapter 24-40.

(iii) Set the BATT 1 and BATT 2 switches to ON.

(iv) Command the Test Set to simulate the conditions shown in table 34-10.5.

Note: Air data test set tolerances shall not exceed ± 25 feet at all test pressure altitudes between 29,000 feet and 34,000 feet (inclusive).

(v) For the Alert Climb check, do as follows:

- Engage the autopilot and select an altitude of 29,000’.
- Set the air data test set to an altitude of 29,000’.
- Increase the altitude on the air data test set to 29,250’.
- Make sure the yellow ALT annunciator is present in the altitude tape and the aural warning is heard in the headset.

(vi) For the Alert Descent check, do as follows:

- Engage the autopilot and select an altitude of 34,000’.
- Set the air data test set to an altitude of 34,000’.
- Decrease the altitude on the air data test set to 33,750’.
- Make sure the yellow ALT annunciator is present in the altitude tape and the aural warning is heard in the headset.

(vii) Set the BATT 1 and BATT 2 switches to OFF.

(viii) Disconnect external electrical power from the airplane. Refer to Chapter 24-40.

(ix) Disconnect the Test Set in accordance with the Test Set manufacturers instructions.

(c) Measure the static port step height:

(i) Using the step height tool, take the average of four measurements (refer to figure 34-10.2 detail A2). The average height must equal 0.030” to 0.050”.

(d) Do the visual inspection of the RVSM critical regions and static ports (refer to figure 34-10.2 detail A3):

(i) Make sure each static port is smooth and free of any roughness or damage.

(ii) Make sure each static port orifice is not deformed or elongated and free of obstruction.

(iii) Make sure the paint in the RVSM critical region is smooth and consistent, with no ridges or non-homogenous distribution.

(iv) Examples of damage or surface anomalies to the critical region (including the static port) include:

•Dents and bulges in the skin surface
•Heavy scratches or creases
•Evidence of impact
•Non-flush or loose fasteners
•Excessive or protruding aerodynamic sealant compound

(2) Perform a 3D scan of the RVSM critical area around the left and right static ports.

Note: Contact Epic Aircraft for guidance on scanning procedures and equipment: customersupport@epicaircraft.com

Note: Scan files must be forwarded to Epic Aircraft.

(a) Make sure the plane is clear and secure, and nothing will cause it to move during scanning (wind, people). Any movement of the fuselage while scanning will add deviation to the point cloud and is unacceptable.

(b) Using a Dry Erase marker (Do not use permanent ink) and a scale mark out a 12" from top, bottom, forward, and AFT of the static port (refer to Figure 34-10.2, detail A3). Take care not to damage the paint.

(c) Using the 12" marks as a guide, mark the perimeter of the zone to be scanned with painters masking tape. The result should be a 2' x 2' square centered around the static port.

(d) Do a 3D scan of the entire surface of the fuselage and static port within the tape marked area. Make sure there are no gaps in the digitally scanned area.

Note: Refer to the scanner manufacturer’s instructions for scanner operation.

(e) If the 3D scanner is unable to pick up darker paint, developer may be used.

Note: Magnaflux SKD-S2 Developer is recommended.

(i) Tape the holes on the static port.

CAUTION: Use extreme caution to avoid getting developer in the static ports.

(ii) Lightly apply developer only to areas needed. Thick application of developer will affect the surface scan and be difficult to clean off.

(iii) Remove tape from static port and complete scanning.

(f) Clean up and save the point clouds.

(i) Trim the resulting point clouds to within the taped area.

(ii) Export the point clouds to an .stl file type.

(iii) Files need to be named "K### Pilot YYMMDD.stl" and "K### Copilot YYMMDD.stl".

Note: The plane's K### serial number can be found on the data plate below the horizontal, on the pilot side of the fuselage. Include the date of the scan (YYMMDD) in the file name.

(g) Once you have completed scans on both Pilot and Co-pilot side of the aircraft; remove the masking tape and erase the dry erase pen marks.

(h) If developer was used:

(i) Tape static port holes before removing developer.

CAUTION: Use extreme caution to avoid getting developer in the static ports.

(ii) Clean all developer from the fuselage.

(iii) Remove the tape from the static port.

(i) Unless otherwise instructed, forward scan files or for further guidance contact Epic Aircraft:

Epic Aircraft, LLC
22590 Nelson Road
Bend, OR 97701
503-318-8849
https://epicaircraft.com/customer-support/
customersupport@epicaircraft.com

Note: Epic Aircraft will notify you once analysis of the scan files is complete to confirm the surfaces meet RVSM requirements.

Table 34-10.5: RVSM Test

Condition	Air Data Test Set			Indicated Altitude (ft)		Allowable Altitude Tolerance (SSEC Corrected Output) (feet)
	Mach	Airspeed (knots)	Altitude (feet)	Pilot	Copilot	
1	0.154	100	1000			980 to 1050
2	0.231	150	1000			1010 to 1080
3	0.182	100	10000			9970 to 10070
4	0.363	200	10000			10050 to 10150
5	0.222	100	20000			19960 to 20100
6	0.441	200	20000			20070 to 20210
7	0.323	120	29000			29010 to 29120
8	0.402	150	29000			29050 to 29160
9	0.453	170	29000			29080 to 29200
10	0.505	190	29000			29120 to 29230
Alert Climb	0.505	190	29000			≤ 29250
11	0.345	120	32000			32010 to 32130
12	0.429	150	32000			32010 to 32180
13	0.484	170	32000			32010 to 32210
14	0.361	120	34000			34020 to 34140
15	0.448	150	34000			34060 to 34190
16	0.506	170	34000			34100 to 34230
Alert Descent	0.506	170	34000			≥ 33750

Figure 34-10.2: RVSM Inspections (Sheet 1 of 2)

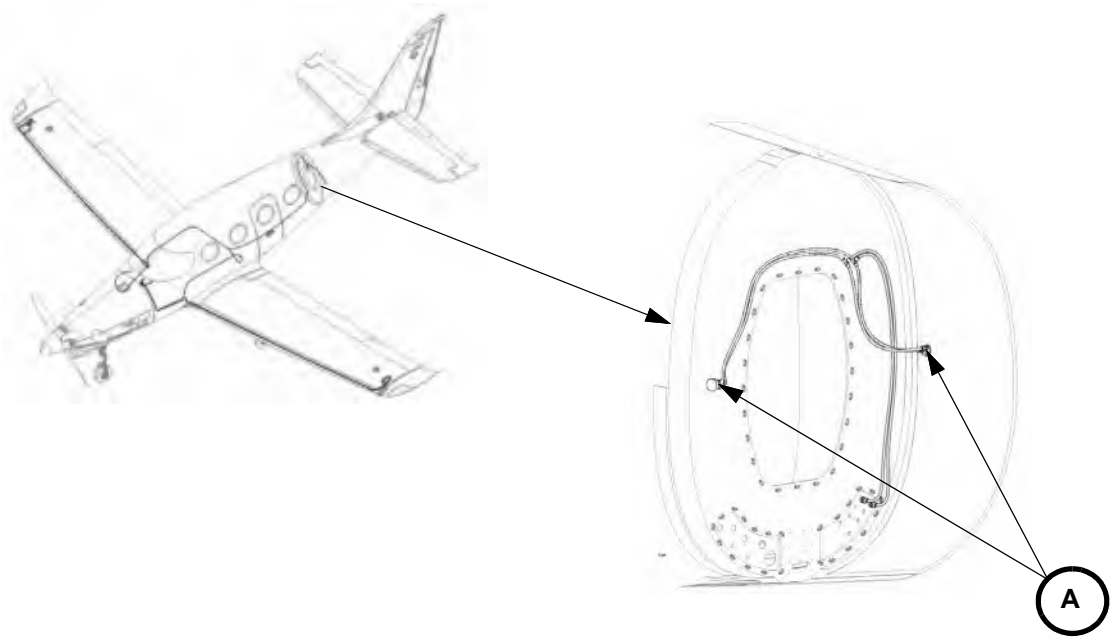

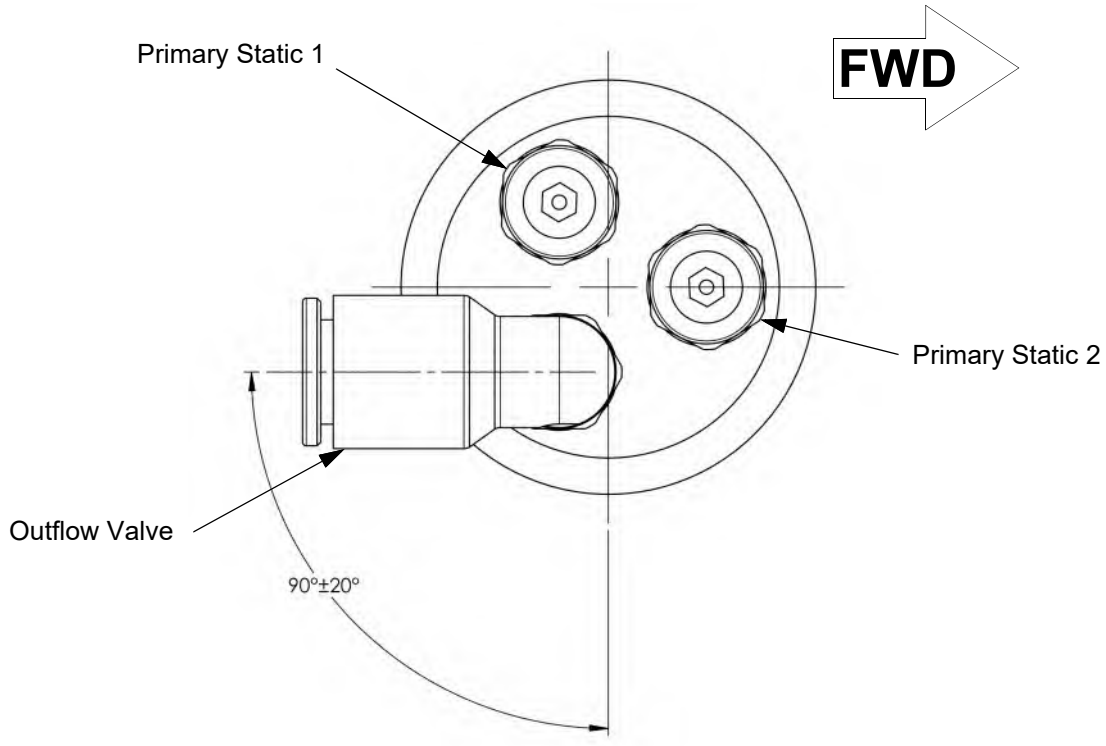

A1

Left side shown, right side opposite.

Figure 34-10.2: RVSM Inspections (Sheet 2 of 2)

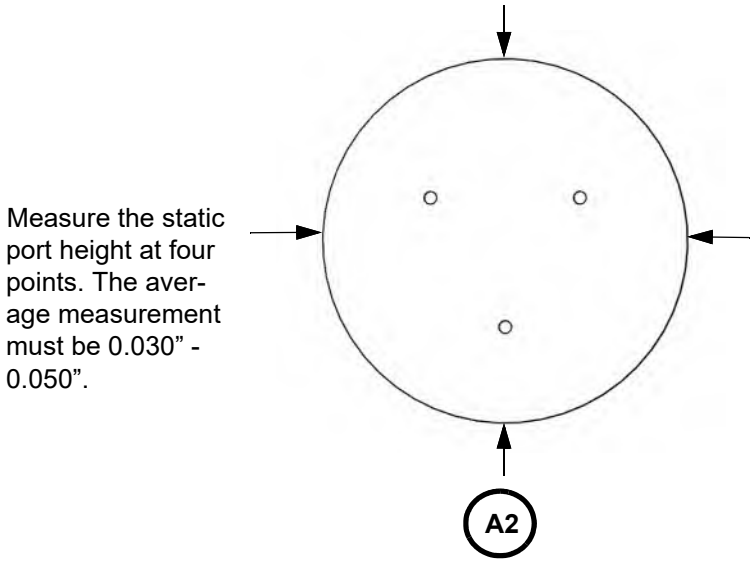

Static Port Step Height Measurements
(Typical)

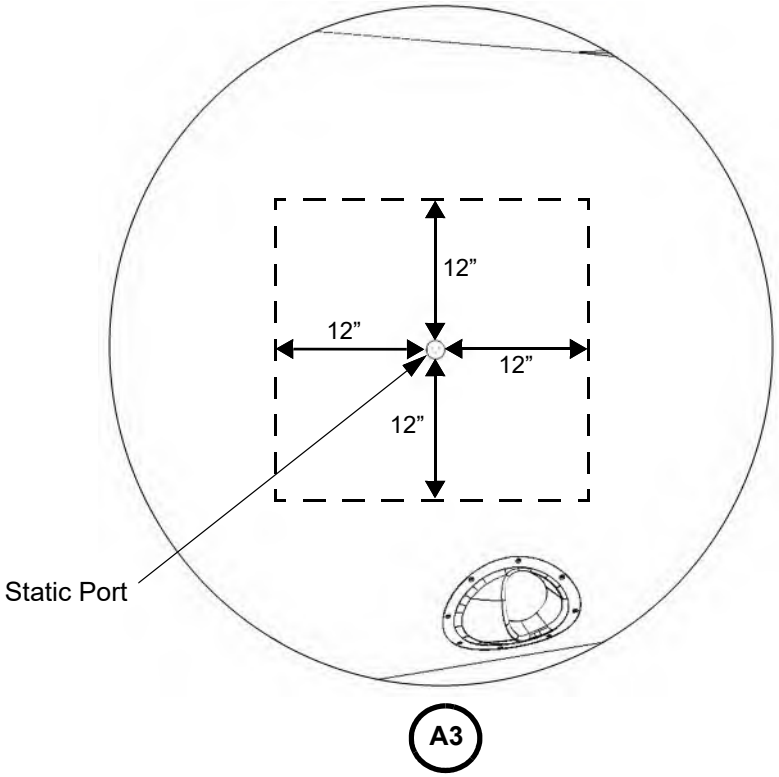

RVSM Critical Area
Left side shown, right side opposite.

K. Outside Air Temperature (OAT) Probe

This airplane has two Garmin GTP 59 OAT probes which provide the two GSU 75 Air Data Computers with air temperature data. One probe per GSU 75.

(1) Removal

(a) Set the BATT 1 and BATT 2 switches to OFF.

(b) Remove all external electrical power to the airplane (refer to Chapter 24-40).

(c) Remove the screws attaching the OAT probe access cover to the underside of the left or right wing of the airplane, as applicable.

(d) Carefully lower the access panel then disconnect the wiring harness from the OAT probe.

(e) Remove the jam nut and washer attaching the OAT probe to the access panel then remove the probe.

(2) Installation

(a) Put the ring terminal over the end of the probe then insert the probe through the mounting hole in the access panel.

(b) Attach the probe to the panel using the sealing washer and jam nut. Torque the jam nut 100 in-lbs ± 20 in-lbs.

(c) Connect the wiring harness to the OAT probes.

(d) Attach the access panel to the wing using four screws.

(e) No configuration of the OAT probe is necessary.

(f) Test the OAT probe (refer to the latest revision of the Garmin G1000 NXi Integrated Avionics System Line Maintenance Manual for the Epic E1000, P/N 190-02330-01).

Figure 34-10.3: GTP 59 OAT Probe

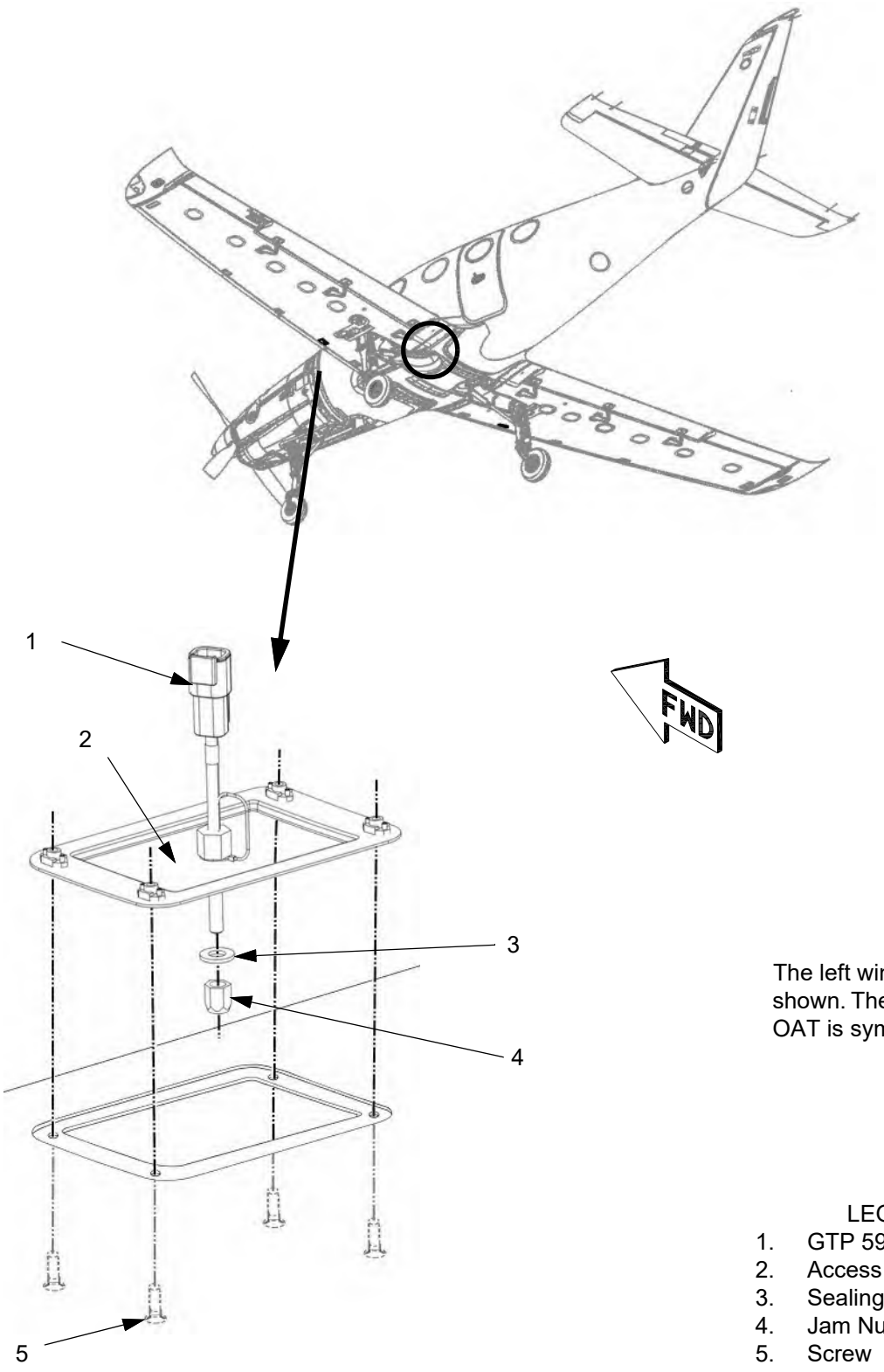

The left wing OAT is shown. The right wing OAT is symmetric.

LEGEND
1. GTP 59 OAT Probe
2. Access Panel
3. Sealing Washer
4. Jam Nut
5. Screw

This Page Intentionally Left Blank

ATTITUDE AND DIRECTION

1. Description

Refer to the current revision of the Garmin G1000 NXi Integrated Avionics System Line Maintenance Manual for the Epic E1000, P/N 190-02330-01. This document provides interface, introductory, description, and basic control and operation information for the integrated avionics system installed on this airplane.

Note: The ATC transponder must be verified in accordance with 14 CFR 91.413 and Appendix F of 14 CFR Part 43. Test procedure per the latest revision of the Garmin G1000 NXi Integrated Avionics System Line Maintenance Manual for the Epic E1000, P/N 190-02330-01. Refer to paragraph 7.5.1 of the current revision of the Garmin G1000 NXi Integrated Avionics System Line Maintenance Manual for the Epic E1000, P/N 190-02330-01.

Note: The static system and altimeter must be verified every 2 years in accordance with 14 CFR 91.411 and Part 43 Appendix E. Refer to paragraph 8.3.3.3 of the current revision of the Garmin G1000 NXi Integrated Avionics System Line Maintenance Manual for the Epic E1000, P/N 190-02330-01. Refer to the manual in the Air Data Accessories Kit, Model No. EPIC1000-945 for Air Data Test Set connection.

The L3 Aviation ESI-500 Electronic Standby Instrument System is a self-contained situational awareness instrument that gives aircraft attitude, altitude, airspeed, heading, and slip indication as a backup for the Garmin G1000 NXi Integrated Cockpit System. The design is built around solid-state rate sensors, accelerometers, and pressure transducers and has an integral battery pack with three lithium ion cells that are recharged using aircraft power.

2. Maintenance Practices

A. GTX 33D, GTX 335DR, GTX 345DR Transponder

(1) Removal

(a) Set the BATT 1 and BATT 2 switches to OFF.

(b) Disconnect external electrical power from the airplane (refer to Chapter 24-40).

(c) Remove PFD 2 (refer to Chapter 34-40).

(d) Loosen the Phillips screw that secures the handle of the transponder mounting lever.

(e) Pull the handle upward to unlock the transponder then gently remove the unit from the rack.

(2) Installation

(a) Inspect the connectors to ensure there are no bent or damaged pins. Repair any damage.

(b) Gently insert the transponder into its rack. Ensure the locking stud on the lever will engage in the channel on the rack. The unit can only be installed in one direction.

(c) Push the transponder lever down towards the bottom of the unit. This engages the locking stud with the dogleg slot and locks the unit into the rack. If there is excessive resistance, do not force the unit.

(d) Lock the handle into the transponder body then tighten the Phillips screw.

(e) Install PFD 2 (refer to Chapter 34-40).

(f) Connect a ground power unit to the airplane (refer to Chapter 24-40).

(g) Load software, configure, and test the transponder (refer to Section 6 and 7.5.1 of the current revision of the Garmin G1000 NXi Integrated Avionics System Line Maintenance Manual for the Epic E1000, P/N 190-02330-01, Title 14 CFR 91.413, and Appendix F of 14 CFR Part 43).

(3) Configuration Check

(a) Place the Garmin G1000 NXi system into Configuration Mode.

To enter Configuration Mode, pull the circuit breaker for all 3 displays (PFD 1, PFD 2, and MFD). While holding the ENT key on each display restore power by closing the circuit breaker. When the words INITIALIZNG SYSTEM appear release the ENT key.

(b) Use the large FMS knob to select the GTX Page group and the small FMS knob to select the Transponder Configuration Page.

(c) Verify the ADDRESS is set to “US TAIL” and the appropriate Flight ID number is entered.

(d) Use the FMS knob to select “XPDR 2” in the SELECT TRANSPONDER field then push the ENT key.

(e) Verify the ADDRESS is set to “US TAIL” and the appropriate Flight ID number is entered.

Figure 34-20.1: GTX 33D Transponders

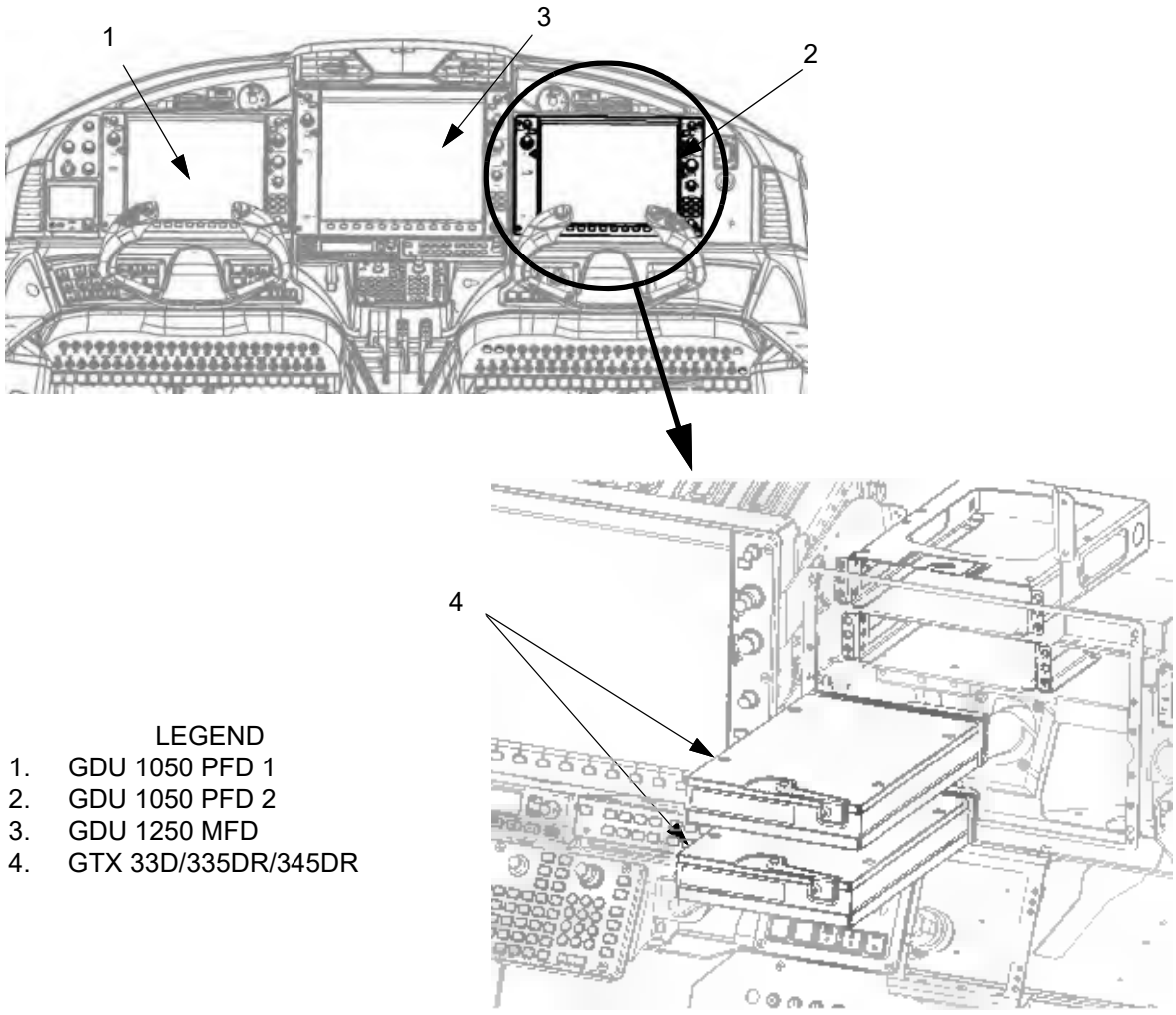

LEGEND
1. GDU 1050 PFD 1
2. GDU 1050 PFD 2
3. GDU 1250 MFD
4. GTX 33D/335DR/345DR

B. L3 Aviation Products MAG-500 Magnetometer

The MAG-500 gives magnetic field information to the L3 Aviation ESI-500 Electronic Standby Instrument System.

(1) Removal

(a) Set the BATT 1 and BATT 2 switches OFF.

(b) Disconnect external electrical power from the airplane (refer to Chapter 24-40).

(c) Remove access panel 4LE (refer to Chapter 6).

(d) Disconnect the wiring harness from the MAG-500.

(e) Remove the 4 screws attaching the MAG-500 to its mounting plate. Retain these non-magnetic screws for re-installation.

(f) Remove the MAG-500.

(2) Installation

(a) Inspect the connectors to ensure there are no bent or damaged pins. Repair any damage.

(b) Put the MAG-500 onto into its mounting plate. Ensure the arrow on the unit points forward and is parallel to the centerline of the airplane.

(c) Attach the MAG-500 to the plate using four non-magnetic screws given or approved by the MAG-500 manufacturer. Tighten the screws snug by removing all looseness then adding 1/4 turn.

(d) Connect the wiring harness to the MAG-500.

(e) Install access panel 4LE (refer to Chapter 6).

(f) Connect a ground power unit to the airplane (refer to Chapter 24-40).

(g) Apply power to the ESI-500.

(h) Do the MAG Install and MAG Swing procedure then do the Power on and Heading check procedures in the Installation Checkout section of the latest revision of the L3 Aviation ESI-500 Installation manual, P/N 0040-15001-01.

C. GMU 44 Magnetometer

(1) Removal

(a) Set the BATT 1 and BATT 2 switches to OFF.

(b) Disconnect external electrical power from the airplane (refer to Chapter 24-40).

(c) Remove access panel 4LE (refer to Chapter 6).

(d) Disconnect the wiring harness from the GMU 44.

(e) Remove the MAG-500 magnetometer, as applicable.

(f) Remove the MAG-500 mounting plate, as applicable.

(g) Remove the three screws attaching the GMU 44 to its mounting ring. Retain these non-magnetic screws for re-installation.

(h) Remove the GMU 44.

(2) Installation

(a) Inspect the connectors to ensure there are no bent or damaged pins. Repair any damage.

(b) Insert the GMU 44 into its mounting ring. Ensure the arrow on the unit points forward and is parallel to the centerline of the airplane.

(c) Attach the GMU 44 to the ring using three non-magnetic screws given or approved by the GMU 44 manufacturer. Tighten the screws snug by removing all looseness then adding 1/4 turn.

(d) Install the MAG-500 mounting plate then install the MAG-500, as applicable.

(e) Connect the wiring harness to the GMU 44.

(f) Connect the wiring harness to the MAG-500 if it was removed.

(g) Install access panel 4LE (refer to Chapter 6).

(h) Connect a ground power unit to the airplane (refer to Chapter 24-40).

(i) Load software, configure, and test the GMU 44 (refer to Section 6 of the current revision of the Garmin G1000 NXi Integrated Avionics System Line Maintenance Manual for the Epic E1000, P/N 190-02330-01).

(3) Magnetometer Alignment and Calibration

To ensure accurate positional and navigational information it is critical that both the Garmin GDU 75B Air Data, Attitude, and Heading Reference System (ADAHRS) and the Garmin GMU 44 Magnetometer are installed in the correct orientation relative to the airframe.

(a) Ensure the ADAHRS 1 and ADAHRS 2 circuit breakers are IN.

(b) Test the Garmin GDU 75B/GMU 44 with the latest revision of the G1000® NXi Integrated Avionics System Line Maintenance Manual for the Epic E1000, PN 190-02330-01.

(c) Do the Magnetometer Interference Test (refer to section 5.8, procedure E of the Garmin GSU 75 Installation Manual P/N 190-01639-00 and the following table.

Table 34-20.1: Magnetometer Interference Test

Elapsed Time After Start of Test (Minutes:Seconds)	Action
0:00	Test Begins
0:10	Generator OFF
0:20	Alternator ON
0:30	Alternator OFF
0:40	Generator ON
0:50	Stall Test Switch (Hold 5 sec)
1:00	Pitch Trim Switch Up
1:10	Pitch Trim Switch Down
1:20	Rudder Trim Switch RIGHT
1:30	Rudder Trim Switch LEFT
1:40	Aileron Trim Switch RIGHT
1:50	Aileron Trim Switch LEFT
2:00	Pitot Heat ON
2:10	Pitot Heat OFF
2:20	Nav and Strobe Lights ON
2:30	Nav and Strobe Lights OFF
2:40	Flaps UP
2:50	Flaps T/O

Elapsed Time After Start of Test (Minutes:Seconds)	Action
3:00	Flaps FULL
3:10	Climate Fan Max
3:20	AIR COND ON
3:30	AIR COND OFF
3:40	Climate Fan Off
3:50	Windows Clear (ON)
4:00	Windows Dark (OFF)
4:10	End of Test

Figure 34-20.1: GMU 44 and MAG-500 Magnetometers

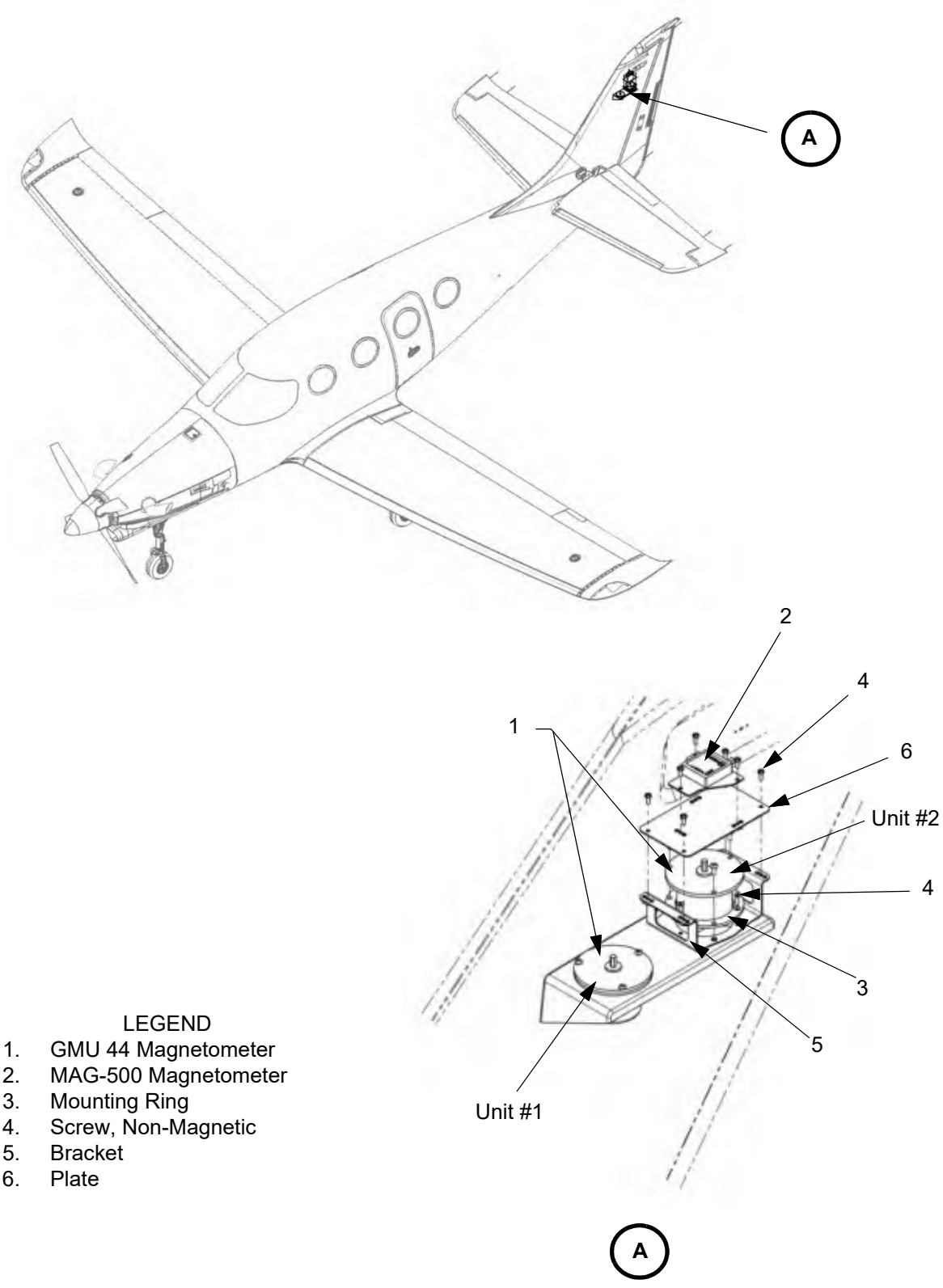

LEGEND

1. GMU 44 Magnetometer
2. MAG-500 Magnetometer
3. Mounting Ring
4. Screw, Non-Magnetic
5. Bracket
6. Plate

D. GSU 75 ADAHRS

Note: The static system and altimeter must be verified every 2 years in accordance with 14 CFR 91.411 and Part 43 Appendix E. Refer to paragraph 8.3.3.3 of the current revision of the Garmin G1000 NXi Integrated Avionics System Line Maintenance Manual for the Epic E1000, P/N 190-02330-01.

(1) Removal

(a) Set the BATT 1 and BATT 2 switches to OFF.

(b) Disconnect external electrical power from the airplane (refer to Chapter 24-40).

(c) Remove the passenger compartment carpet and flooring. Refer to Chapter 25-20 and 53-20.

(d) Disconnect the wiring harness from the GSU 75.

(e) Remove the retention fasteners holding the GSU 75 onto the mounting plate.

(f) Gently lift the GSU 75 from the mounting plate.

(2) Installation

(a) Inspect the connectors to ensure there are no bent or damaged pins. Repair any damage.

(b) Put the GSU 75 on the mounting plate ensuring the orientation is correct and the feet are fully engaged on the mounting plate.

(c) Tighten the retention fasteners 15 to 20 in.-lbs.

(d) Connect the wiring harness to the GSU 75.

(e) Install the passenger compartment flooring and carpet. Refer to Chapter 25-20 and 53-20.

(f) Load software, configure, and test the GSU 75 (refer to Section 6 of the current revision of the Garmin G1000 NXi Integrated Avionics System Line Maintenance Manual for the Epic E1000, P/N 190-02330-01).

(g) Do the Pitot Static System Leakage Test (refer to 34-10).

(h) RVSM aircraft: Do the test of the Air Data and Altitude Alert Systems (refer to 34-10.2.J.1.b).

Figure 34-20.2: GSU 75 ADAHRS

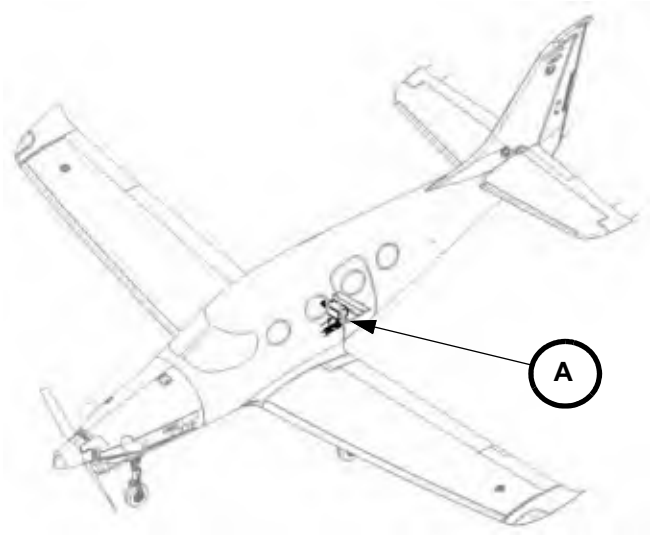

LEGEND
1. GSU 75 ADAHRS
2. Mounting Plate
3. Bolt
4. Washer

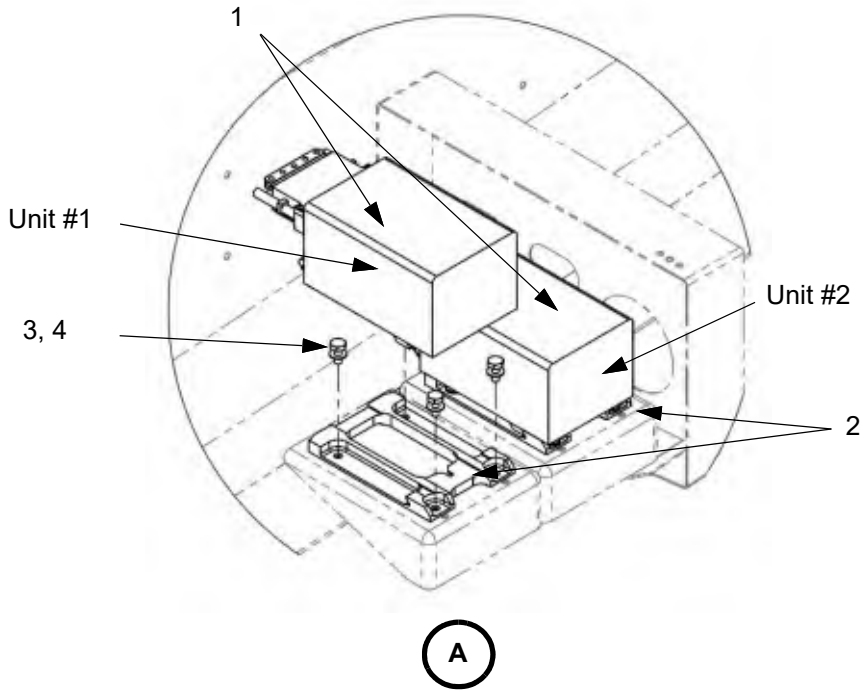

E. Garmin GI 275 Electronic Flight Instrument (SN: K014, K040 and On)

Aircraft K040 and on have the Garmin GI 275 Electronic Flight Instrument installed under STC SA02658SE. Refer to the ICA for the STC for description, maintenance, and trouble-shooting information.

F. L3 Aviation ESI-500 Electronic Standby Instrument (SN: K003 - K039)

(1) Removal

(a) Set the BATT 1 and BATT 2 switches to OFF.

(b) Disconnect external electrical power from the airplane (refer to Chapter 24-40).

(c) Loosen the mounting clamp adjustment screw.

(d) Carefully pull the unit forward then disconnect the pitot/static plumbing and the electrical harness.

(e) Remove the ESI-500 from the instrument panel.

(2) Installation

(a) Connect the pitot/static plumbing and the wiring harness.

(b) Insert the ESI-500 into the instrument panel and through the mounting clamp.

(c) Secure the ESI-500 by tightening the mounting clamp adjustment screw. Torque the screw 5 to 8 in.-lbs.

(d) Connect a ground power unit to the airplane (refer to Chapter 24-40).

(e) Apply power to the ESI-500.

CAUTION: A Configuration and Checkout Log is created at the initial installation of the ESI-500 and provided to the owner. If the ESI-500 is replaced, the replacement must be configured using the original Configuration and Checkout log created for the aircraft.

(f) Do the Post Installation Setup Procedure for Angles then do the Power On and Display check procedures. Refer to Section 3, paragraph 3.2.1, 3.3, and 3.4.2 of the current revision of the L3 Aviation ESI-500 Installation manual, P/N 0040-15001-01.

(3) Battery Pack Removal and Installation

(a) Remove the ESI-500 from the airplane.

(b) Refer to the latest revision of the L3 Aviation ESI-500 Installation manual, P/N 0040-15001-01 for battery pack removal and installation procedures.

(c) Install the ESI-500 into the airplane.

(d) After the battery is replaced, the Real Time Clock (RTC) must be set up followed by a battery calibration (refer to the latest revision of the L3 Aviation ESI-500 Installation manual, P/N 0040-15001-01).

(4) Battery Calibration

Calibrate the battery once every year. Refer to the latest revision of the L3 Aviation ESI-500 Installation manual, P/N 0040-15001-01 and the L3 Avionics Pilot's Guide for the ESI-500, P/N 0040-15000-01.

(5) Real Time Clock (RTC)

Check the accuracy of the Real Time Clock (RTC) once every 2 years. Correct any RTC error at an appropriately rated repair station. Refer to the latest revision of the L3 Aviation ESI-500 Installation manual, P/N 0040-15001-01.

(6) Inspection

(a) Check the condition and security of the mounting hardware.

(b) Check that all cable connectors are correctly mated and attached.

(c) Check that all connecting cables are not cut or pinched.

(d) Check the ESI-500 faceplate for cleanliness. The bezel, menu key, knob, and display glass can be cleaned using a dry lint-free, static-free cloth. Care should be taken to avoid scratching the surface of the display. When cleaning the display with a cloth, only apply minimal/light pressure to the display.

(e) If necessary, a lint free cloth dampened with isopropyl alcohol or a high quality lens cleaner may be used to clean the display. Do not use ammonia based cleaners on the display. Again, only minimal/light pressure should be applied to the display when cleaning. Cleaning fluid should only be applied to the cloth. To prevent the cleaning fluid from seeping into the unit, never spray or pour the cleaning fluid on the face of the unit.

Note: The display has an anti-reflective coating. Applying too much pressure during cleaning can remove this coating. When viewing an unpowered display, smudges may be visible. These smudges are not typically visible when the display is powered and displaying information. Aggressive cleaning of the display to remove smudges may result in degrading or removing the anti-reflective coating on the display. Do not use ammonia based cleaners on the display.

G. L3 Aviation Systems DCM-500 Data Configuration Module

The DCM-500 Data Configuration Module is permanently attached to the ESI-500 wiring harness. It is tucked into the mating connector backshell. Failed DCM-500 are not repairable and a new module must be purchased from L3 Aviation. The following are necessary for installation of a new DCM-500:

- MicroSD Card
- Configuration File (e.g. .bin) generated by the ACM Tool. Refer to Appendix C of the latest revision of the L3 Aviation ESI-500 Installation manual, P/N 0040-15001-01.
- Options Activation Code(s) for Navigation or Synthetic Vision, if applicable. New codes are required if a DCM is replaced. Contact Avionics Systems for new code activation.
- Angles Data and MAG Install Data recorded from the Post Installation Setup of the latest revision of the L3 Aviation ESI-500 Installation manual, P/N 0040-15001-01.

(1) Removal

(a) Disconnect the mating connector from the ESI-500.

(b) From the wire bundle, remove the tie wrap securing the overbraid. Refer to the installation section of the latest revision of the L3 Aviation ESI-500 Installation manual, P/N 0040-15001-01 for details on the cable assembly.

(c) Slide the overbraid to expose the DCM-500.

(d) Remove the DCM-500 contact from the mating connector.

(2) Installation

(a) Insert the contacts of the new DACM-500 into the mating connector. Refer to Installation Guidelines for the Data Configuration Module and the interconnect diagram in the installation section of the latest revision of the L3 Aviation ESI-500 Installation manual, P/N 0040-15001-01 for details.

(b) Slide the overbraid back into position then use a new tie wrap to secure the overbraid.

(c) Connect the mating connector to the ESI-500.

(d) Connect a ground power unit to the airplane (refer to Chapter 24-40).

(e) Apply power to the ESI-500.

(f) Do the entire Installation Setup Procedure then do the Power On and Display Check procedures (refer to the Installation Checkout section of the latest revision of the L3 Aviation ESI-500 Installation manual, P/N 0040-15001-01).

Figure 34-20.3: L3 Aviation ESI-500 Electronic Standby Instrument System

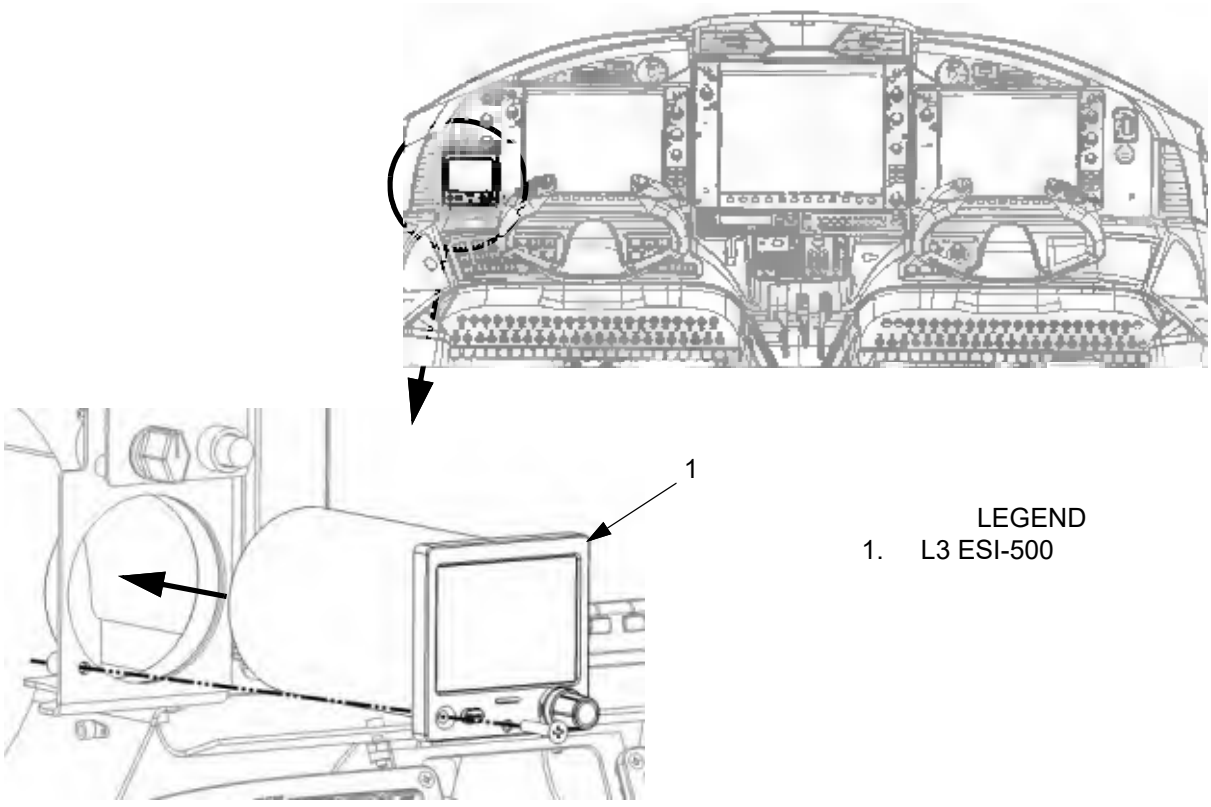

INDEPENDENT POSITION DETERMINING

1. Description

Refer to the current revision of the Garmin G1000 NXi Integrated Avionics System Line Maintenance Manual for the Epic E1000, P/N 190-02330-01. This document provides interface, introductory, description, and basic control and operation information for the integrated avionics system installed on this airplane.

K003-K085 (excluding K014), refer to the current revision of the E1000 Wiring Manual, P/N SK05000002.

K014, K086 and on, refer to the current revision of the E1000 Wiring Manual, P/N SK05003002.

2. Maintenance Practices

A. GDU 1050 Primary Flight Display

Removal and installation procedures for both GDU 1050 are similar.

(1) Removal
   (a) Set the BATT 1 and BATT 2 switches to OFF.
   (b) Disconnect external electrical power from the airplane (refer to Chapter 24-40).
   (c) Using a 3/32” hex tool, rotate the four 1/4 turn fasteners in the face of the GDU 1050 counter-clockwise until they reach their stops.
   (d) Slowly slide the GDU 1050 from the instrument panel until the connector can be reached and disconnected.
   (e) Remove the GDU 1050.

(2) Installation
   (a) Inspect the connector and pins for signs of damage. Repair any damage.
   (b) Connect the wiring harness to the rear of the unit.
   (c) Insert the GDU 1050 into the instrument panel ensuring that all four 1/4 turn fasteners align with the corresponding holes.
   (d) Slide the GDU 1050 into position. Do not use excessive force.
   (e) When the GDU 1050 is in position, rotate all four 1/4 turn fasteners clockwise to lock to the panel.
   (f) Connect a ground power unit to the airplane (refer to Chapter 24-40).
   (g) Load software, configure, and test the GDU 1050 (refer to Section 6 of the current revision of the Garmin G1000 NXi Integrated Avionics System Line Maintenance Manual for the Epic E1000, P/N 190-02330-01).

B. GDU 1250 Multifunction Display

(1) Removal

(a) Set the BATT 1 and BATT 2 switches to OFF.

(b) Disconnect external electrical power from the airplane (refer to Chapter 24-40).

(c) Using a 3/32” hex tool, rotate the six 1/4 turn fasteners in the face of the GDU 1250 counter-clockwise until they reach their stops.

(d) Slowly slide the GDU 1250 from the instrument panel until the connector can be reached and disconnected.

(e) Remove the GDU 1250.

(2) Installation

(a) Inspect the connector and pins for signs of damage. Repair any damage.

(b) Connect the electrical harness to the rear of the unit.

(c) Insert the GDU 1250 into the instrument panel ensuring that all six 1/4 turn fasteners align with the corresponding holes.

(d) Slide the GDU 1250 into position. Do not use excessive force.

(e) When the GDU 1250 is in position, rotate all six 1/4-turn fasteners clockwise to lock it to the panel.

(f) Connect a ground power unit to the airplane (refer to Chapter 24-40).

(g) Load software, configure, and test the GDU 1250 (refer to Section 6 of the current revision of the Garmin G1000 NXi Integrated Avionics System Line Maintenance Manual for the Epic E1000, P/N 190-02330-01.

C. GCU 477 Flight Management System (FMS) Controller

(1) Removal

(a) Set the BATT 1 and BATT 2 switches to OFF.

(b) Disconnect external electrical power from the airplane (refer to Chapter 24-40).

(c) Using a 3/32” hex tool, rotate the four 1/4 turn fasteners in the face of the GCU 477 counter-clockwise until they reach their stops.

(d) Slowly slide the GCU 477 out of its housing.

(e) Disconnect the electrical harness.

(f) Carefully remove the GCU 477 from the instrument panel.

(2) Installation

(a) Inspect the connectors using a flashlight to ensure there are no bent or damaged pins. Repair any damage.

(b) Connect the electrical harness.

(c) Insert the GCU 477 into its housing.

(d) Turn the hex nut clockwise which will pull the unit inward until it is seated in its mount. Do not over-tighten the nut.

(e) Connect a ground power unit to the airplane (refer to Chapter 24-40).

(f) Load software, configure, and test the GCU 477 (refer to Section 6 of the current revision of the Garmin G1000 NXi Integrated Avionics System Line Maintenance Manual for the Epic E1000, P/N 190-02330-01).

Figure 34-40.1: GDU 1050 PFD, GDU 1250 MFD, and GCU 477 PFD Controller (Sheet 1 of 2)

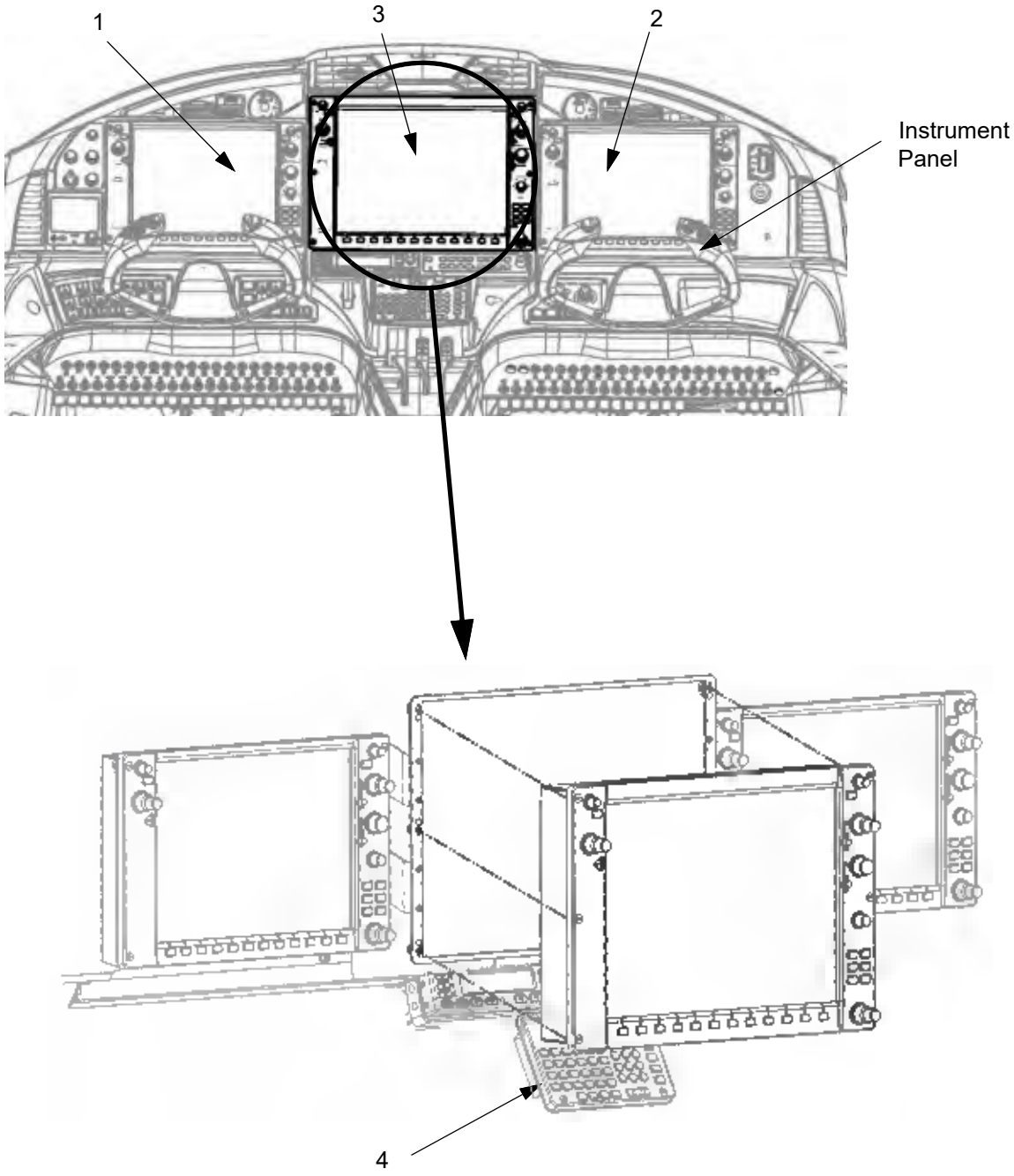

LEGEND

1. GDU 1050 PFD 1
2. GDU 1050 PFD 2
3. GDU 1250 MFD
4. GCU 477

Figure 34-40.1: GDU 1050 PFD, GDU 1250 MFD, and GCU 477 PFD Controller (Sheet 2 of 2)

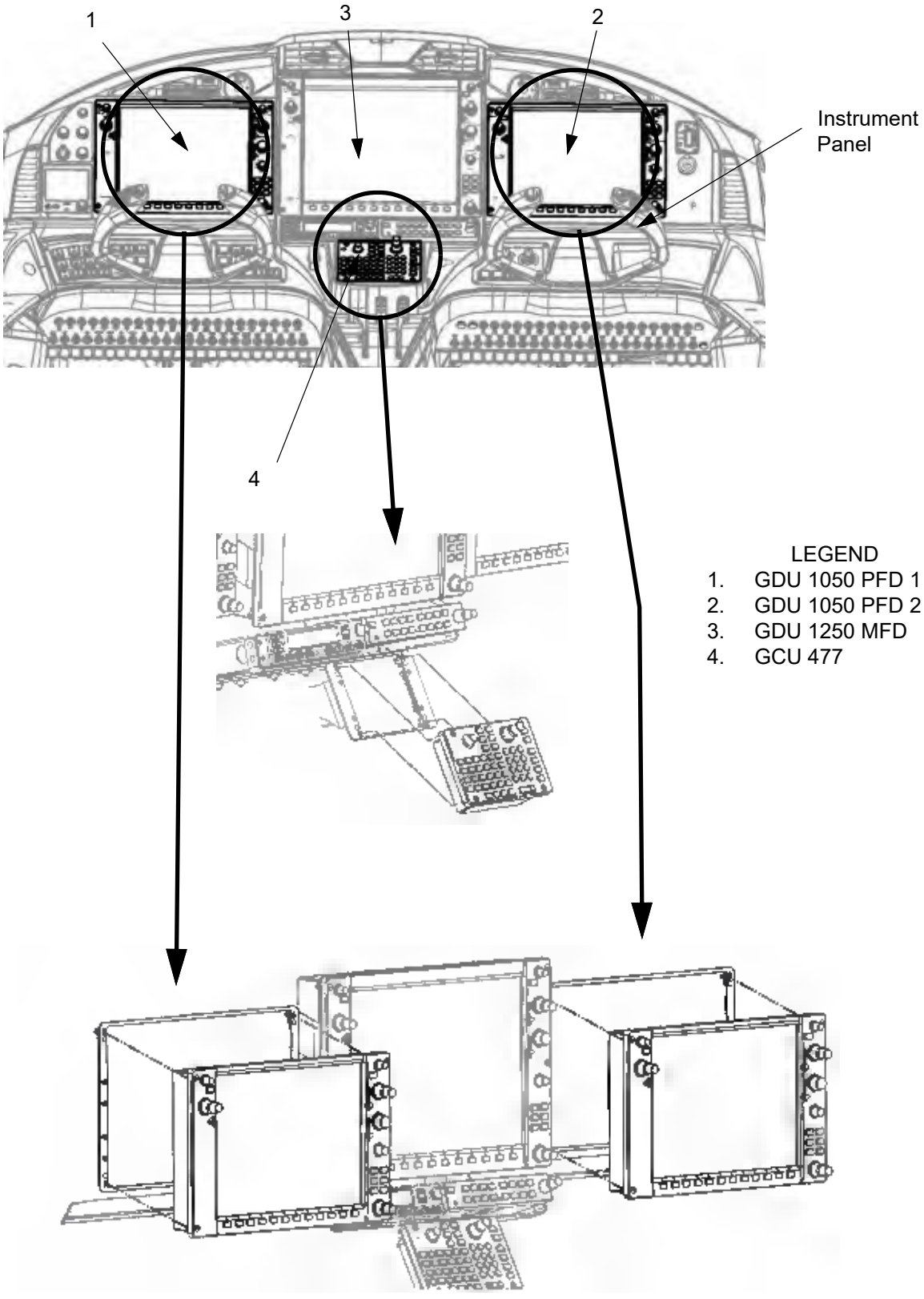

D. GTS 825 Traffic Advisory System Processor

WARNING: Before removal or re-installation of any component of the GTS 825 system, ensure that the airplane power is off. Unplug any external electric power supply.

(1) Removal

(a) Set the BATT 1 and BATT 2 switches to OFF.

(b) Disconnect external electrical power from the airplane (refer to Chapter 24-40).

(c) Remove the passenger compartment carpet and flooring. Refer to Chapter 25-20 and 53-20

(d) Disconnect the electrical, data, and antenna coaxial cable connectors from the GTS 825.

(e) Unscrew the lockdown knob.

(f) Remove the GTS 825 from the mounting rack.

(2) Installation

(a) Insert the GTS 825 into the mounting rack with its connectors facing the same side of the rack as the lockdown knob.

(b) Screw the rack lockdown knob onto the unit lockdown hook. Tighten the knob until the ratchet clinking stops.

(c) Connect the electrical, data, and antenna coaxial cable connectors to the GTS825.

(d) Load software, configure, and test the GTS 825 (refer to the current revision of the Garmin G1000 NXi Integrated Avionics System Line Maintenance Manual for the Epic E1000, P/N 190-02330-01)

(e) Complete the appropriate return to service procedures (refer to Chapter 24-00.2.A. and 2.M.).

(f) Install the passenger compartment flooring and carpet (refer to Chapter 25-20 and 53-20).

(3) GTS 825 Traffic Configuration Check

(a) Place the Garmin G1000 NXi system into Configuration Mode.

To enter Configuration Mode pull the circuit breaker for all 3 displays (PFD 1, PFD 2, and MFD). While holding the ENT key on each display restore power by closing the circuit breaker. When the words INITIALIZNG SYSTEM appear release the ENT key.

(b) Use the FMS knob to select the GTS Configuration page.

(c) Verify that the cable loss of 2.8 dB has been entered in the TOP ANT CBL LOSS field, cable loss of 2.2 dB has been entered in the BOT ANT CBL LOSS field, and RETRACTABLE has been entered in the LANDING GEAR field. If not continue with steps (d) – (f).

(d) Using the FMS knob go to the TOP ANT CBL LOSS field.

(e) Using the FMS knob enter 2.8 into the field followed by the ENT key.

(f) Using the FMS knob go to the BOT ANT CBL LOSS field.

(g) Using the FMS knob enter 2.2 into the field followed by the ENT key.

(h) Using the FMS knob go to the LANDING GEAR field.

(i) Using the FMS knob select RETRACTABLE followed by the ENT key.

Figure 34-40.2: GTS 825 TAS Processor

LEGEND

1. GTS 825 TAS
2. Mounting Rack
3. Screw

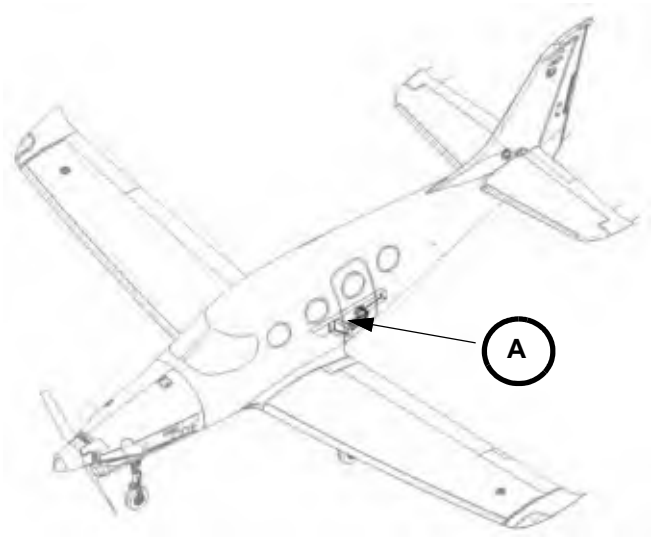

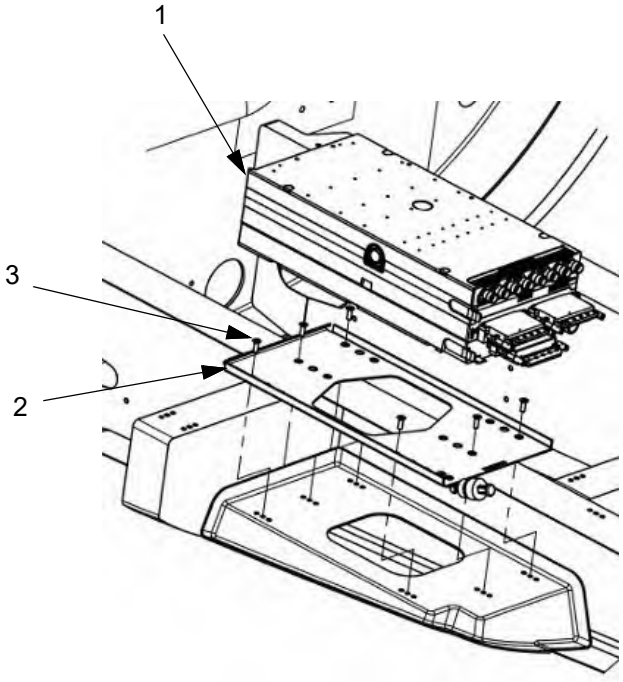

E. GPS 1 Antenna (Garmin GA 37)

(1) Removal

(a) Remove the ceiling panel.

(b) Disconnect the antenna cables from the antenna.

(c) Remove the nuts, washers, and screws attaching the antenna to the fuselage.

(d) Remove the antenna and gasket from the top of the fuselage.

(e) Remove any remaining sealant from the fuselage.

(2) Installation

(a) Use Scotch-Brite™ to remove aluminum oxide from the base of the antenna.

(b) Clean the contact area on the fuselage and the antenna using isopropyl alcohol then let it dry.

(c) Align and hold the gasket and antenna on top of the fuselage.

(d) Wet install the screws using a light coat PR 1425 B-1/2 on the threads. Remove any access sealant after torquing.

(e) Install the washers and nuts that attach the antenna to the fuselage. Torque the nuts 20 to 25 in.-lbs.

(f) Apply a fillet bead of white Dow Corning 748 sealant, or equivalent, around the perimeter of the antenna.

(g) Connect the two antenna cables ensuring each cable is connected to the correct antenna connector.

(h) Verify continuity between each antenna connector and an aircraft ground strap for a maximum of 1 ohm resistance.

(i) Install the ceiling panel.

F. GPS 2 Antenna or Iridium/GPS L1 Antenna

(1) Removal

(a) Remove the ceiling panel (refer to Chapter 25-50).

(b) Disconnect the antenna cable(s) from the antenna.

(c) Remove the nuts, washers, and screws attaching the antenna to the fuselage.

(d) Remove the antenna and gasket from the top of the fuselage.

(e) Remove any remaining sealant from the fuselage.

(2) Installation

(a) Use Scotch-Brite™ to remove aluminum oxide from the base of the antenna.

(b) Clean the contact area on the fuselage and the antenna using isopropyl alcohol then let it dry.

(c) Align and hold the gasket and antenna on top of the fuselage.

(d) Wet install the screws using a light coat PR 1425 B-1/2 on the threads. Remove any access sealant after torquing.

(e) Install the washers and nuts attaching the antenna to the fuselage. Torque the nuts (GA-35: 12 to 15 in-lbs., ATI621-62: 7 to 9 in-lbs.).

(f) Apply a fillet bead of white Dow Corning 748 sealant, or equivalent, around the perimeter of the antenna.

(g) Connect the antenna cable(s).

(h) Verify continuity between each antenna connector and an aircraft ground strap for a maximum of 1 ohm resistance.

(i) Install the ceiling panel (refer to Chapter 25-50).

G. TAS Antenna (Garmin GA 58) - Fuselage Top

(1) Removal

(a) Remove the ceiling panel (refer to Chapter 25-50).

(b) Disconnect the antenna cables from the antenna.

(c) Remove the nuts, washers, and screws attaching the antenna to the fuselage.

(d) Remove the antenna and gasket from the top of the fuselage.

(e) Remove any remaining sealant from the fuselage.

(2) Installation

(a) Use Scotch-Brite™ to remove aluminum oxide from the base of the antenna.

(b) Clean the contact area on the fuselage and the antenna using isopropyl alcohol then let it dry.

(c) Align and hold the gasket and antenna on top of the fuselage.

(d) Wet install the screws using a light coat PR 1425 B-1/2 on the threads. Remove any access sealant after torquing.

(e) Install the washers and nuts attaching the antenna to the fuselage. Torque the nuts 12 to 15 in.-lbs.

(f) Apply a fillet bead of white Dow Corning 748 sealant, or equivalent, around the perimeter of the antenna.

(g) Connect the four antenna cables ensuring each cable is connected to the correct antenna connector.

(h) Verify continuity between each antenna connector and an aircraft ground strap for a maximum of 1 ohm resistance.

(i) Install the ceiling panel (refer to Chapter 25-50).

H. TAS Antenna (Garmin GA 58) - Fuselage Bottom

(1) Removal

(a) Remove the access panel between the pilot and copilot seats (refer to Chapter 6).

(b) Disconnect the antenna cables from the antenna.

(c) Remove the nuts, washers, and screws attaching the antenna to the fuselage.

(d) Remove the antenna and gasket from the bottom of the fuselage.

(e) Remove any remaining sealant from the fuselage.

(2) Installation

(a) Use Scotch-Brite™ to remove aluminum oxide from the base of the antenna.

(b) Clean the contact area on the fuselage and the antenna using isopropyl alcohol then let it dry.

(c) Align and hold the gasket and antenna on the bottom of the fuselage.

(d) Wet install the screws using a light coat PR 1425 B-1/2 on the threads. Remove any access sealant after torquing.

(e) Install the washers and nuts attaching the antenna to the fuselage. Torque the nuts 12 to 15 in-lbs.

(f) Apply a fillet bead of white Dow Corning 748 sealant, or equivalent, around the perimeter of the antenna.

(g) Connect the four antenna cables ensuring each cable is connected to the correct antenna connector.

(h) Verify continuity between each antenna connector and an aircraft ground strap for a maximum of 1 ohm resistance.

(i) Install the access panel (refer to Chapter 6).

I. Comant CI 120-1 NAV/VOR/GS Antenna

(1) Removal

(a) Remove access panel 4LE (refer to Chapter 6).

(b) Disconnect the antenna cable from the antenna.

(c) Remove the screws and washers attaching the antenna to the vertical stabilizer.

(d) Remove the antenna and gasket from the vertical stabilizer.

(e) Remove any remaining sealant from the vertical stabilizer.

(2) Installation

(a) Use Scotch-Brite™ to remove aluminum oxide from the base of the antenna.

(b) Clean the contact area on the fuselage and the antenna using isopropyl alcohol then let it dry.

(c) Align and hold the gasket and antenna on the vertical stabilizer.

(d) Insert the attachment screws through the mounting holes in the antenna.

(e) Install the screws and washers attaching the antenna to the fuselage. Torque the screws 12 to 15 in-lbs.

(f) Apply a fillet bead of white Dow Corning 748 sealant, or equivalent, around the perimeter of the antenna.

(g) Connect the antenna cable.

(h) Verify continuity between each antenna connector and an aircraft ground strap for a maximum of 1 ohm resistance.

(i) Install the access panel (refer to Chapter 6).

Figure 34-40.3: Navigation Antennas (Sheet 1 of 4)

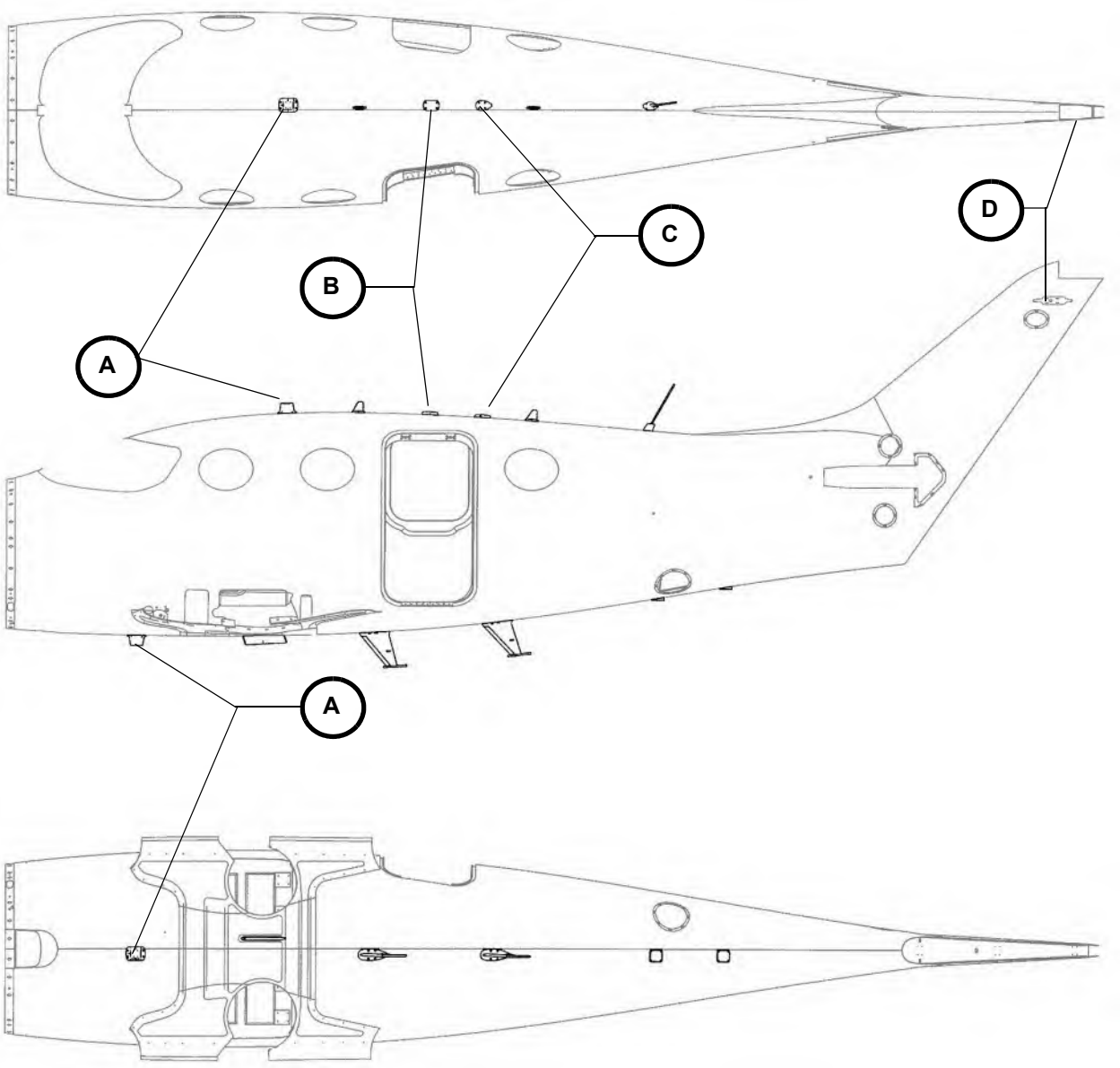

Figure 34-40.3: Navigation Antennas (Sheet 2 of 4)

LEGEND

1. GA 58 TAS Antenna
2. GA 37 GPS 1 Antenna
3. Screw
4. Conductive Gasket
5. Washer
6. Nut

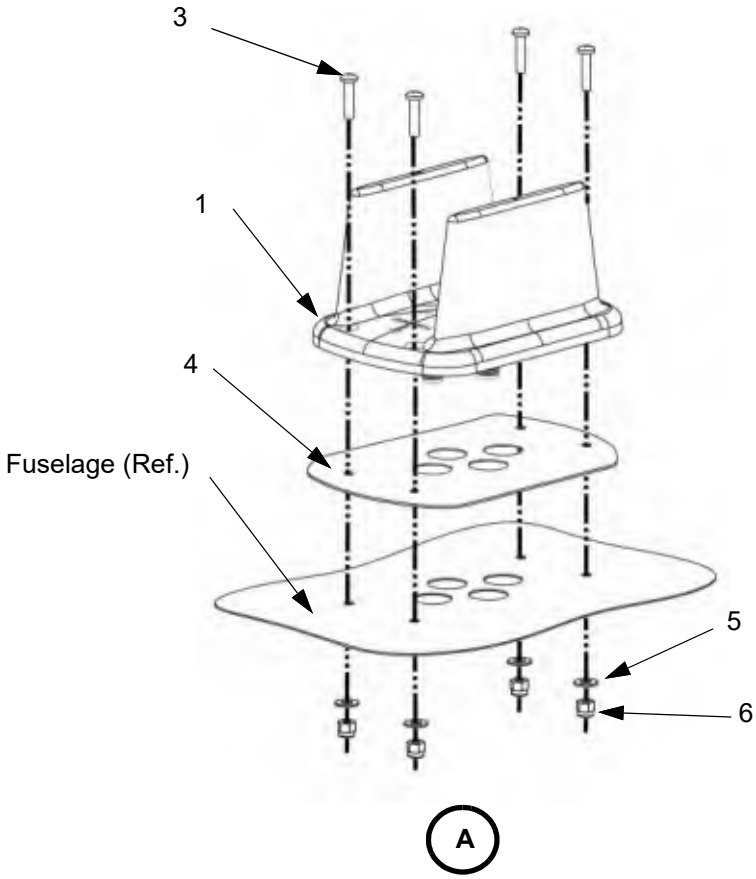

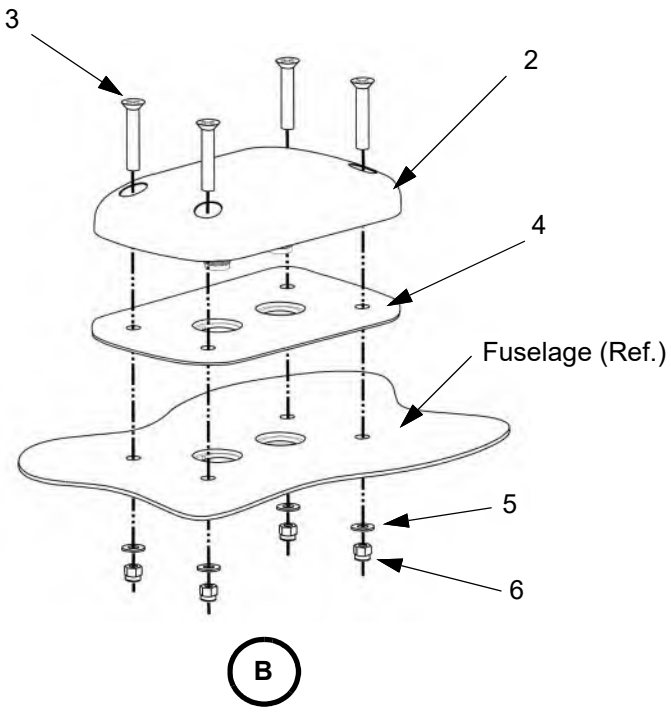

Figure 34-40.3: Navigation Antennas (Sheet 3 of 4)

LEGEND

1. GA 35 GPS 2 Antenna
2. Aero ATI 621-62 Iridium/GPS 2 Antenna
3. Conductive Gasket
4. Screw
5. Washer
6. Nut

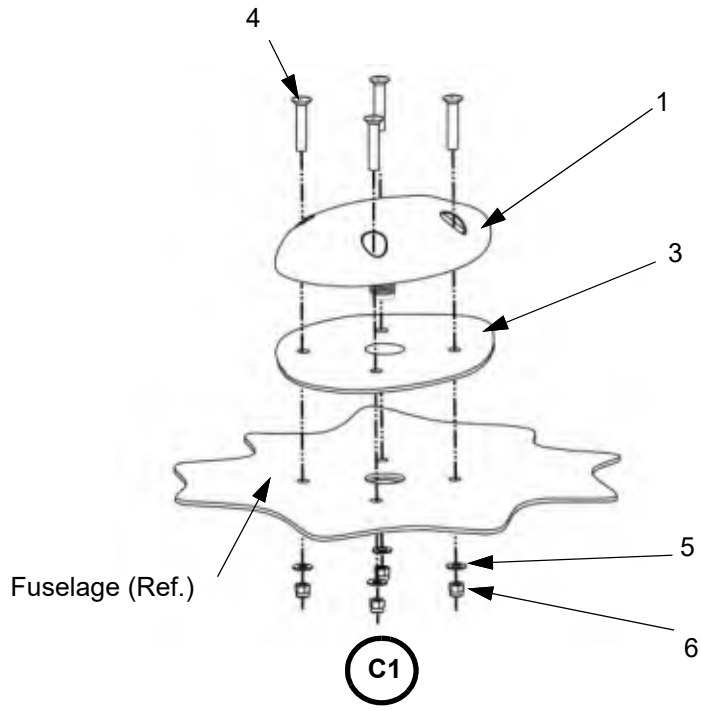

GA 35 GPS 2 Antenna

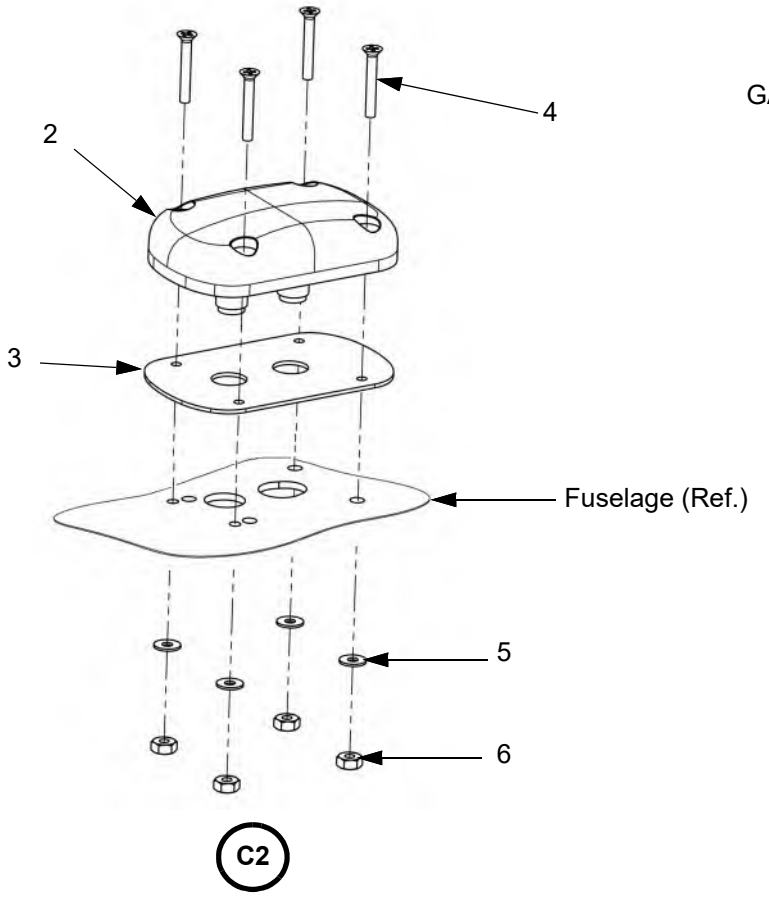

Aero ATI 621-62 Iridium/GPS 2 Antenna

Navigation Antennas (Sheet 4 of 4)

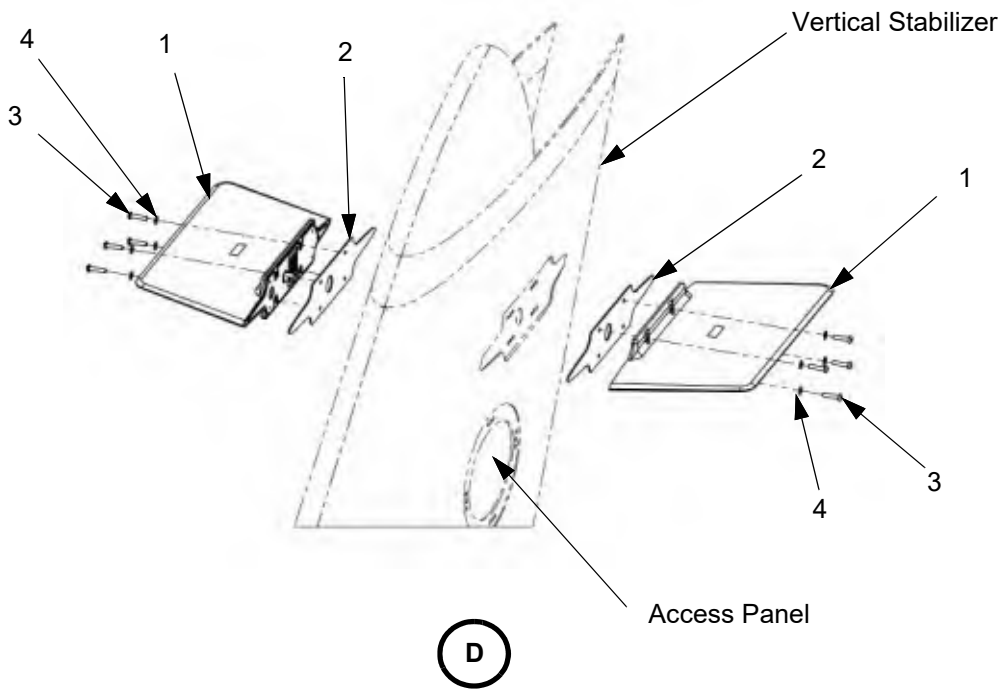

LEGEND

1. CI 120-1 NAV / VOR / GS Antenna
2. Conductive Gasket
3. Screw
4. Washer

J. Cooling Fan (Garmin GCF 528)

(1) Removal

(a) Set the BATT 1 and BATT 2 switches to OFF.

(b) Disconnect external electrical power from the airplane (refer to Chapter 24-40).

(c) Remove PFD 1 (refer to Chapter 34-40).

(d) Disconnect the electrical harness.

(e) Disconnect the airflow tubing.

(f) Remove the socket head cap screws and washers attaching the fan to the rack.

(g) Remove the fan.

(2) Installation

(a) Align the mounting holes in the fan with the holes in the rack then attach it using washers and socket head cap screws. The air outlets face airplane forward.

(b) Connect the airflow tubing to the air outlets on the fan.

(c) Connect the electrical harness.

(d) Install PFD 1 (refer to Chapter 34-40).

(e) Verify operation of the fan.

K. Cooling Fan (Garmin Tubeaxial Fan)

There are two tubeaxial fans behind the instrument panel. Removal and installation procedures for the fans are similar.

(1) Removal

(a) Set the BATT 1 and BATT 2 switches to OFF.

(b) Disconnect external electrical power from the airplane (refer to Chapter 24-40).

(c) Remove PFD 1 or PFD 2 depending on the fan to be removed. Refer to Chapter 34-40.

(d) Disconnect the electrical harness from the fan.

(e) Remove the socket head cap screws and washers attaching the fan to the rack.

(f) Remove the fan.

(2) Installation

(a) Align the mounting holes in the fan with the holes in the rack then attach it using washers and socket head cap screws.

(b) Connect the electrical harness.

(c) Install PFD 1 or PFD 2 as applicable. Refer to Chapter 34-40.

(d) Verify operation of the fan.

Figure 34-40.4: Instrument Panel Cooling Fans

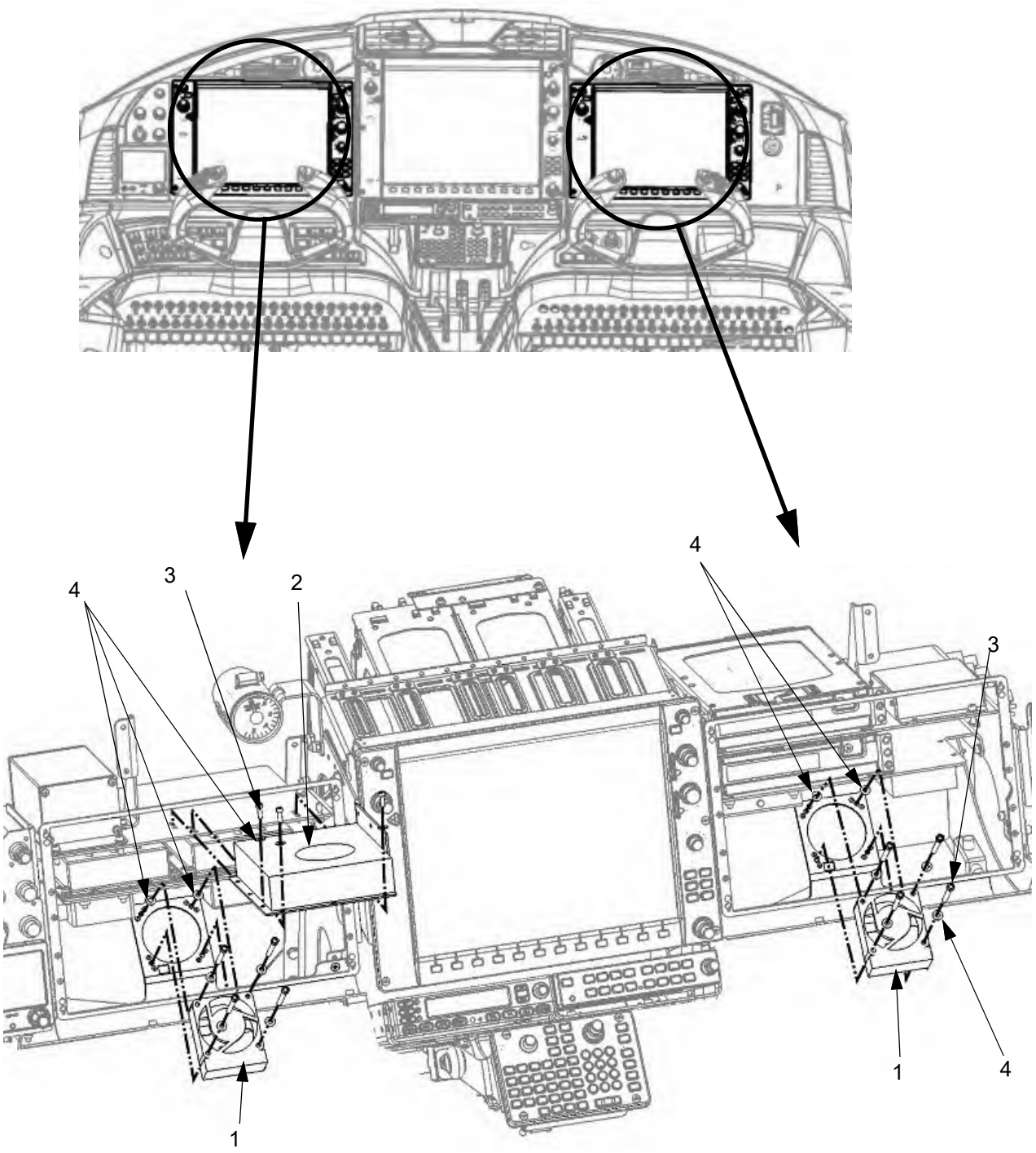

LEGEND

1. Tubeaxial Fan
2. GCF 528
3. Socket Head Cap Screw
4. Washer

L. Garmin GWX 70 Weather Radar (Optional)

The Garmin GWX 70 Airborne Color Weather Radar is a solid-state pulsed radar with forty watts of output through a 10” phased array antenna. The GWX 70 radar microprocessor-based Line Replaceable Unit (LRU) is mounted in the right wing tip and outputs weather radar data to the MFD through an Ethernet high speed data bus (HSDB). Weather radar can be displayed on PFD 1, PFD 2, or the MFD.

WARNING: Weather radar should only be operated on the ground by authorized personal. Do not operate the weather radar in an enclosed space. The minimum safe distance from the antenna while it is transmitting is 7’ 4”.

WARNING: When power is applied to the aircraft, the GWX Weather Radar will perform a self-test, which includes a sweep of the GWX array on all axes to verify full range of motion before entering Standby mode. The self-test does not activate radiated sweeps, however as a precaution, remain at least 7’ 4” from the radar antenna when the radar self test is active.

WARNING: When the aircraft is jacked, the WEATHER RADAR circuit breaker must be pulled and collared to disable the radar.

WARNING: Never operate the radar when the aircraft is being fueled or de-fueled.

(1) Troubleshooting

(a) Troubleshoot the GWX 70 Weather Radar as specified in the current revision of the Garmin G1000 NXi Integrated Avionics System Line Maintenance Manual for the Epic E1000 AX, P/N 190-03244-00.

(2) Removal

(a) Set the BATT 1 and BATT 2 switches to OFF.

(b) Disconnect external electrical power from the airplane (refer to Chapter 24-40).

(c) Pull and collar the WEATHER RADAR circuit breaker.

CAUTION: RADOME IS EXTREMELY FRAGILE AND THIN, CAN CRACK EASILY WHEN REMOVING OR INSTALLING, USE CAUTION WHEN HANDLING.

(d) Carefully support the radome and remove the (6) screws that attach the radome to the radar pod. Remove the radome.

(e) Carefully support the radar assembly and remove the (4) screws that attach the radar assembly to the bulkhead. Remove the radar assembly.

(f) Disconnect the electrical connector from the bottom of the radar assembly.

(g) Refer to Chapter 57-30 for wingtip removal.

(3) Installation

(a) If removed, install the wingtip (refer to Chapter 57-30).

(b) Carefully put the radar assembly in position and install the (4) screws that attach the radar assembly to the bulkhead. Torque the screws to 50 - 70 in-lbs.

(c) Connect the electrical connector to the bottom of the radar assembly.

CAUTION: RADOME IS EXTREMELY FRAGILE AND THIN, CAN CRACK EASILY WHEN REMOVING OR INSTALLING, USE CAUTION WHEN HANDLING.

CAUTION: DO NOT FORCE RADOME INTO PLACE, PARTS SHOULD INSTALL WITH EASE.

(d) Put the radome in position on the radar pod. Install the (6) screws that attach the radome to the radar pod. Torque the screws to 20 - 25 in-lbs.

(e) Reset the WEATHER RADAR circuit breaker.

(f) Do the Operational Check of the weather radar.

(4) Operational Check

(a) Connect external electrical power to the airplane (refer to Chapter 24-40).

(b) Set BATT 1 and BATT 2 switches to ON.

(c) Make sure the WEATHER RADAR circuit breaker is in.

(d) Put the aircraft in Configuration mode:

(i) Pull the PFD 1, PFD 2 and MFD circuit breakers.

(ii) Set the BATT 1 and BATT 2 switches to ON.

(iii) Press ENTER on the pilot’s PFD while resetting the PFD 1 circuit breaker.

(iv) Press ENTER on the co-pilot’s PFD while resetting the PFD 2 circuit breaker.

(v) Press ENTER on the MFD while resetting the MFD circuit breaker.

(vi) INITIALIZING SYSTEM message should be displayed on all three displays.

(e) Using the FMS knob, navigate to the System tab and choose the System Status page on the PFD.

(f) Scroll down to GWX and verify system status reads “OK”.

(g) Set BATT 1 and BATT 2 switches to off.

(h) Disconnect external electrical power from the airplane (refer to Chapter 24-40).

Figure 34-40.5: Garmin GWX 70 Weather Radar

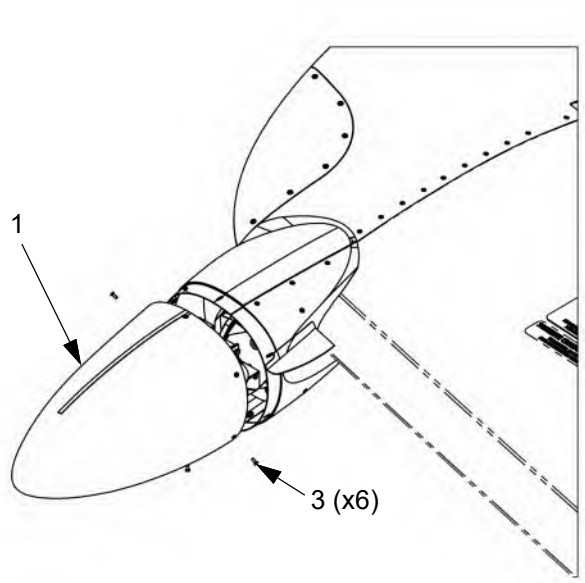

LEGEND

1. Radome
2. GWX 70 Weather Radar
3. Screw

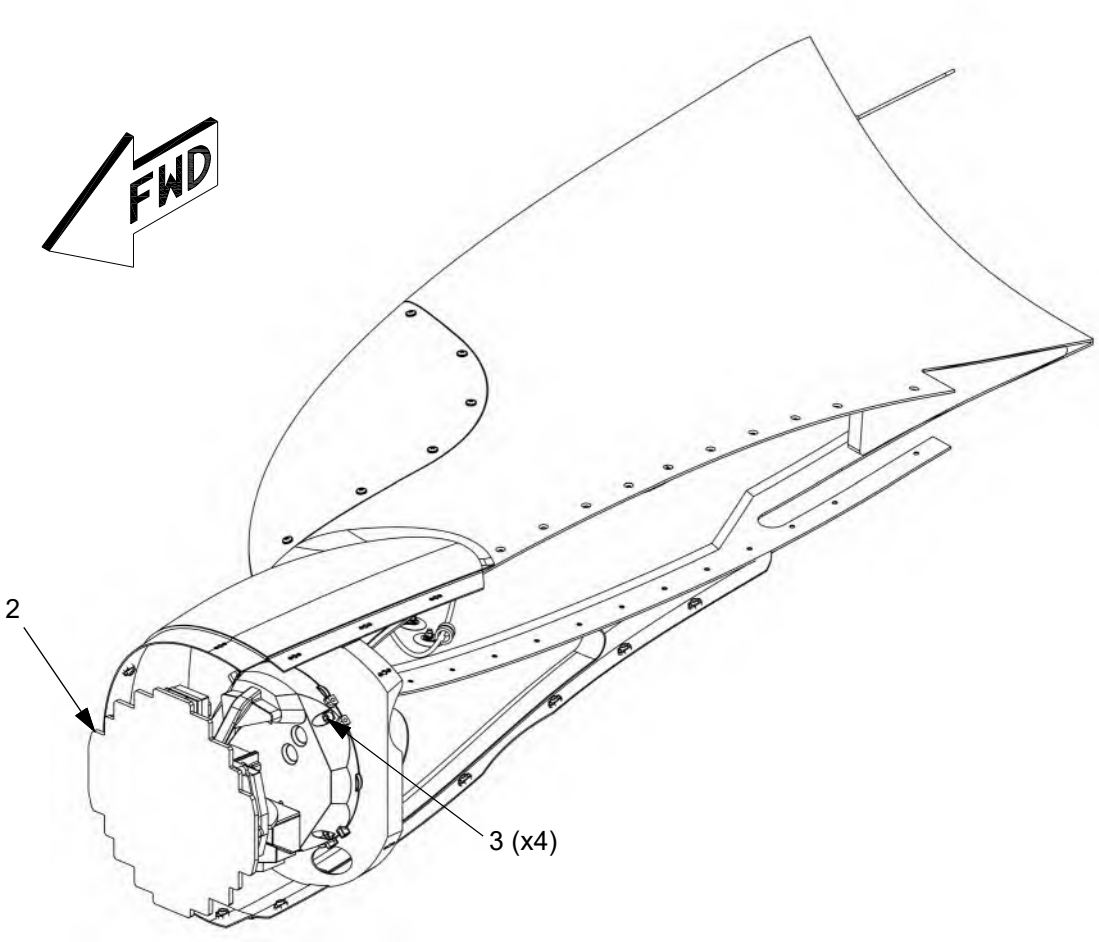

M. Garmin GRA 5500 Radar Altimeter (SN: K014, K086 and On)

(1) Troubleshooting

(a) Troubleshoot the GRA 5500 Radar Altimeter as specified in the current revision of the Garmin G1000 NXi Integrated Avionics System Line Maintenance Manual for the Epic E1000 AX, P/N 190-03244-00.

(2) Removal

(a) Open the RAD ALT circuit breaker.

(b) Verify the BATT 1 and BATT 2 switches are set to off.

(c) Disconnect external electrical power from the airplane (refer to Chapter 24-40).

(d) Remove the pressure bulkhead access panel (refer to Chapter 21-30).

(e) Disconnect the electrical connector.

(f) Loosen the ratcheting latch on the GRA 5500 mounting rack, and remove the GRA 5500.

(g) If required, remove the (4) screws that attach the GRA 5500 mounting rack to the bracket and remove the mounting rack.

(3) Installation

(a) If removed, put the mounting rack in position on the bracket and install the (4) screws that attach the mounting rack to the bracket. Torque the screws to 20 - 25 in-lbs.

(b) Put the GRA 5500 in position in the rack and tighten the ratcheting latch.

(c) Connect the electrical connector.

(d) Close the RAD ALT circuit breaker.

(e) Do the Radar Altimeter Operational Check (refer to Chapter 34-40.2.N[3]).

(f) Install the pressure bulkhead access panel (refer to Chapter 21-30).

(4) Operational Check

(a) Connect external electrical power to the airplane (refer to Chapter 24-40).

(b) Set BATT 1 and BATT 2 switches to ON.

(c) Make sure the RAD ALT circuit breaker is in.

(d) Put the aircraft in Configuration mode:

(i) Pull the PFD 1, PFD 2 and MFD circuit breakers.

(ii) Set the BATT 1 and BATT 2 switches to ON.

(iii) Press ENTER on the pilot's PFD while resetting the PFD 1 circuit breaker.

(iv) Press ENTER on the co-pilot's PFD while resetting the PFD 2 circuit breaker.

(v) Press ENTER on the MFD while resetting the MFD circuit breaker.

(vi) INITIALIZING SYSTEM message should be displayed on all three displays.

(e) Using the FMS knob, navigate to the GRA page.

(f) Under “FAULTS”, verify there are no faults except for a calibration fault.

(g) Ensure the area around the radar altimeters are free of any personnel, tools, or components that may interfere with or reflect the altimeter beam.

(h) Press the “CALIBRATE” soft key.

(i) If successful, the altitude output should read “0 feet” and no faults are shown on the page.

(j) Set BATT 1 and BATT 2 switches to off.

(k) Disconnect external electrical power from the airplane (refer to Chapter 24-40).

Figure 34-40.6: Garmin GRA 5500 Radar Altimeter

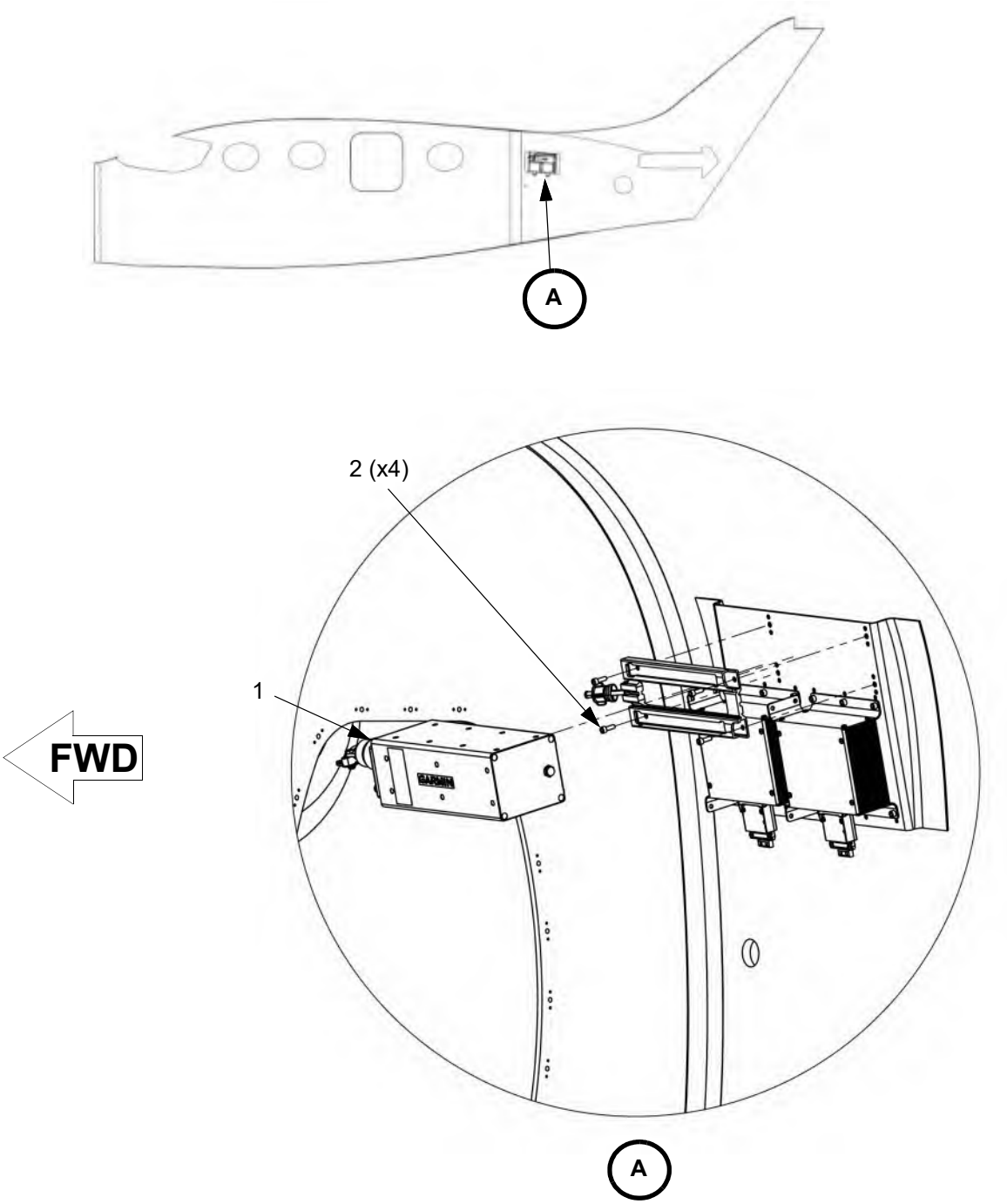

LEGEND

1. Garmin GRA 5500
2. Screw

N. Garmin Radar Altimeter Antennas (SN: K014, K086 and On)

(1) Removal

(a) Set BATT 1 and BATT 2 switches to off.

(b) Disconnect external electrical power from the airplane (refer to Chapter 24-40).

(c) Pull and collar the RAD ALT circuit breaker.

(d) Remove the pressure bulkhead access panel (refer to Chapter 21-30).

(e) Use a plastic scraper to remove the sealant around the base of the antenna.

(f) Disconnect the electrical connectors from the antenna.

(g) Remove the (4) screws, washers, nuts, and protective cover (forward antenna only) that attach the antenna to the fuselage.

(h) Carefully remove the antenna and spacers from the fuselage.

(i) Remove and discard the conductive gasket.

(2) Installation

(a) Clean the antenna base and mounting area of the fuselage with Scotch-Brite, then wipe with isopropyl alcohol and allow to dry.

(b) Put a new conductive gasket in position on the antenna.

(c) Put the antenna, spacers, and protective cover (forward antenna only) in position on the fuselage.

Note: Make sure the arrow on the antenna is oriented forward.

(d) Install the (4) screws, washers, and nuts that attach the antenna to the fuselage. Tighten the nuts equally to 25 in-lbs.

(e) Connect the electrical connectors to the antenna.

(f) Verify continuity between the antenna connector and an aircraft ground strap for a maximum of 1 ohm resistance.

(g) Reset the RAD ALT circuit breaker.

(h) Do the Radar Altimeter Operational Check (refer to Chapter 34-40.2.N[3]).

(i) Run a bead of RTV 748 (MIL-A-46146) sealant around the base of the antenna.

(j) Install the pressure bulkhead access panel (refer to Chapter 21-30).

Figure 34-40.7: Garmin Radar Altimeter Antennas=

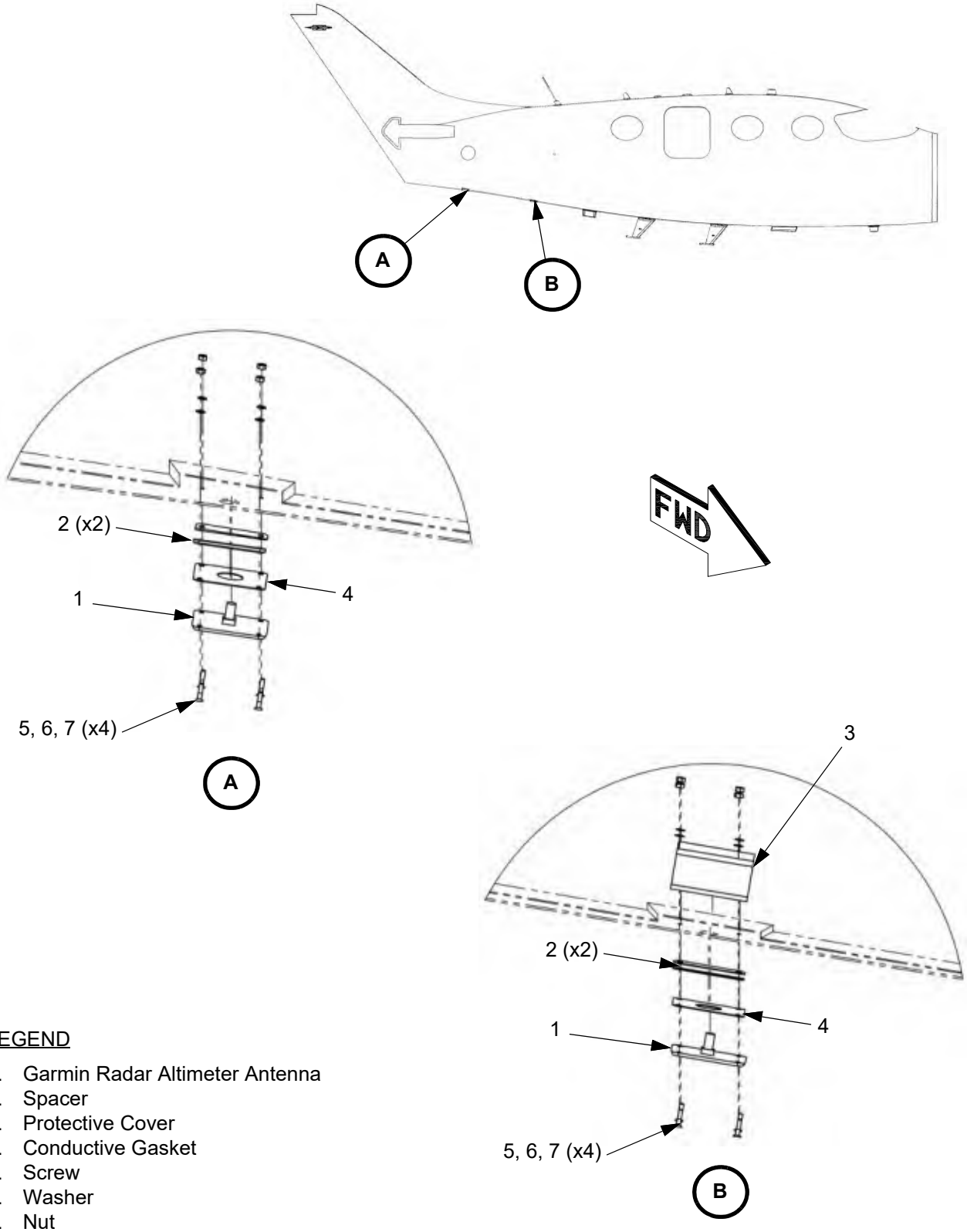

LEGEND

1. Garmin Radar Altimeter Antenna
2. Spacer
3. Protective Cover
4. Conductive Gasket
5. Screw
6. Washer
7. Nut

This Page Intentionally Left Blank

DEPENDENT POSITION DETERMINING

1. Description

Refer to the current revision of the Garmin G1000 NXi Integrated Avionics System Line Maintenance Manual for the Epic E1000, P/N 190-02330-01. This document provides interface, introductory, description, and basic control and operation information for the integrated avionics system installed on this airplane.

K003-K085 (except K014), refer to the current revision of the E1000 Wiring Manual, P/N SK05000002.

K014, K086 and on, refer to the current revision of the E1000 Wiring Manual, P/N SK05003002.

2. Maintenance Practices

A. GIA 64W NAV/COM/ILS/GPS/WAAS and System Interface

(1) Removal

(a) Set the BATT 1 and BATT 2 switches to OFF.

(b) Disconnect external electrical power from the airplane (refer to Chapter 24-40).

(c) Remove the GDU 1250 multi-function flight display (refer to Chapter 34-40).

(d) Loosen the Phillips screw that secures the handle of the GIA 64W mounting lever.

(e) Pull the handle upward to unlock the GIA 64W then gently remove the unit from the rack.

(2) Installation

(a) Inspect the connectors to ensure there are no bent or damaged pins. Repair any damage.

(b) Gently insert the GIA 64W into its rack. Ensure the locking stud on the lever will engage in the channel on the rack. The unit can only be installed in one direction.

CAUTION: Do not use excessive force when inserting the GIA 64W into the rack. This may cause damage to the connectors, unit and/or unit rack. If excessive resistance is felt during installation, stop! Remove the GIA 64W and identify the source of resistance. The rear plates are designed to float in the unit rack. Check to ensure the rear plates are not bound by the connectors or spring clip.

(c) Push the GIA 64W lever down towards the bottom of the unit. This engages the locking stud with the dogleg slot and locks the unit into the rack. If there is excessive resistance, do not force the unit.

(d) Lock the handle into the GIA 64W body then tighten the Phillips screw.

(e) Install the GDU 1250 MFD (refer to Chapter 34-40).

(f) Connect a ground power unit to the airplane (refer to Chapter 24-40).

(g) Load software, configure, and test the GIA 64W (refer to Section 6 of the current revision of the Garmin G1000 NXi Integrated Avionics System Line Maintenance Manual for the Epic E1000, P/N 190-02330-01).

Figure 34-50.1: GIA 64W NAV/COM/ILS/GPS/WAAS and System Interface

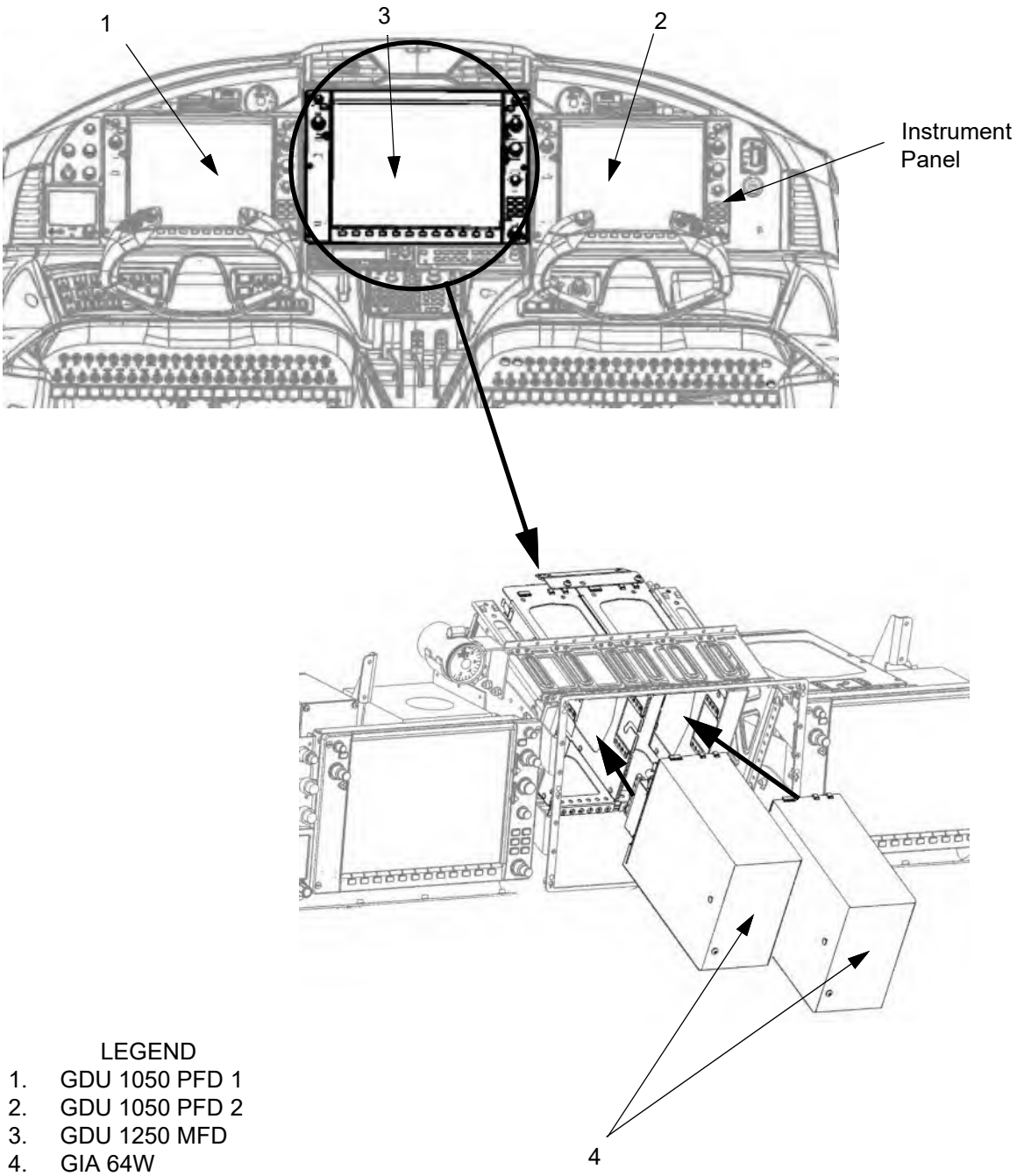

LEGEND

1. GDU 1050 PFD 1
2. GDU 1050 PFD 2
3. GDU 1250 MFD
4. GIA 64W

B. Marker Beacon Antenna (Comant CI 118)

(1) Removal

(a) Remove the belly panels (refer to Chapter 57-10).

(b) Disconnect the antenna cable from the antenna.

(c) Remove the washers, faston tab, and screws attaching the antenna to the belly panel.

(d) Remove the antenna and gasket from the bottom of the fuselage.

(e) Remove any remaining sealant from the fuselage.

(2) Installation

(a) Use Scotch-Brite™ to remove aluminum oxide from the base of the antenna.

(b) Clean the contact area on the fuselage and the antenna using isopropyl alcohol then let it dry.

(c) Align and hold the gasket and antenna on the bottom of the belly panels.

(d) Insert the attachment screws through the mounting holes in the antenna.

(e) Install the washers, faston tab, and screws attaching the antenna to the fuselage. Torque the screws 20 to 25 in-lbs.

(f) Fillet a bead of white Dow Corning 748 sealant, or equivalent, around the perimeter of the antenna.

(g) Connect the antenna cable.

(h) Verify continuity between a mounting screw and the fuselage for a maximum of 1 ohm resistance.

(i) Install the belly panels (refer to Chapter 57-10).

C. Transponder Antenna (Comant CI 105)

(1) Removal

(a) Remove the ceiling panel (refer to Chapter 25-50).

(b) Disconnect the antenna cable from the antenna.

(c) Remove the nuts and washers attaching the antenna to the fuselage.

(d) Remove the antenna and gasket from the top of the fuselage.

(e) Remove any remaining sealant from the fuselage.

(2) Installation

(a) Use Scotch-Brite™ to remove aluminum oxide from the base of the antenna.

(b) Clean the contact area on the fuselage and the antenna using isopropyl alcohol then let it dry.

(c) Align and hold the gasket and antenna on top of the fuselage.

(d) Install the washers and nuts attaching the antenna to the fuselage. Torque the nuts 12 to 15 in-lbs.

(e) Fillet a bead of white Dow Corning 748 sealant, or equivalent, around the perimeter of the antenna.

(f) Connect the antenna cable.

(g) Verify continuity between a mounting screw and the fuselage for a maximum of 1 ohm resistance.

(h) Install the ceiling panel (refer to Chapter 25-50).

Figure 34-50.2: Marker Beacon and Antennas (Sheet 1 of 2)

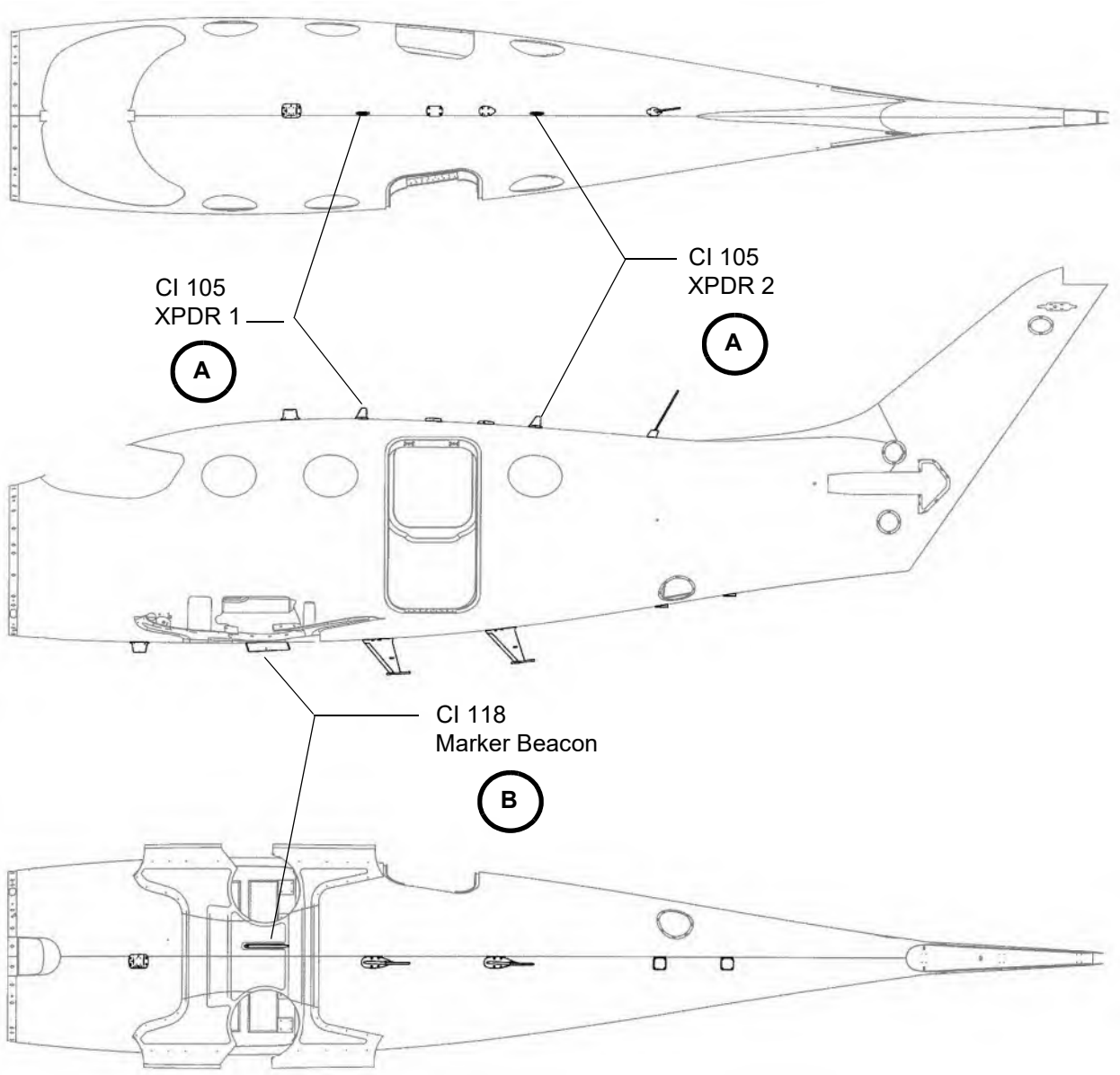

Figure 34-50.2: Marker Beacon and Antennas (Sheet 2 of 2)

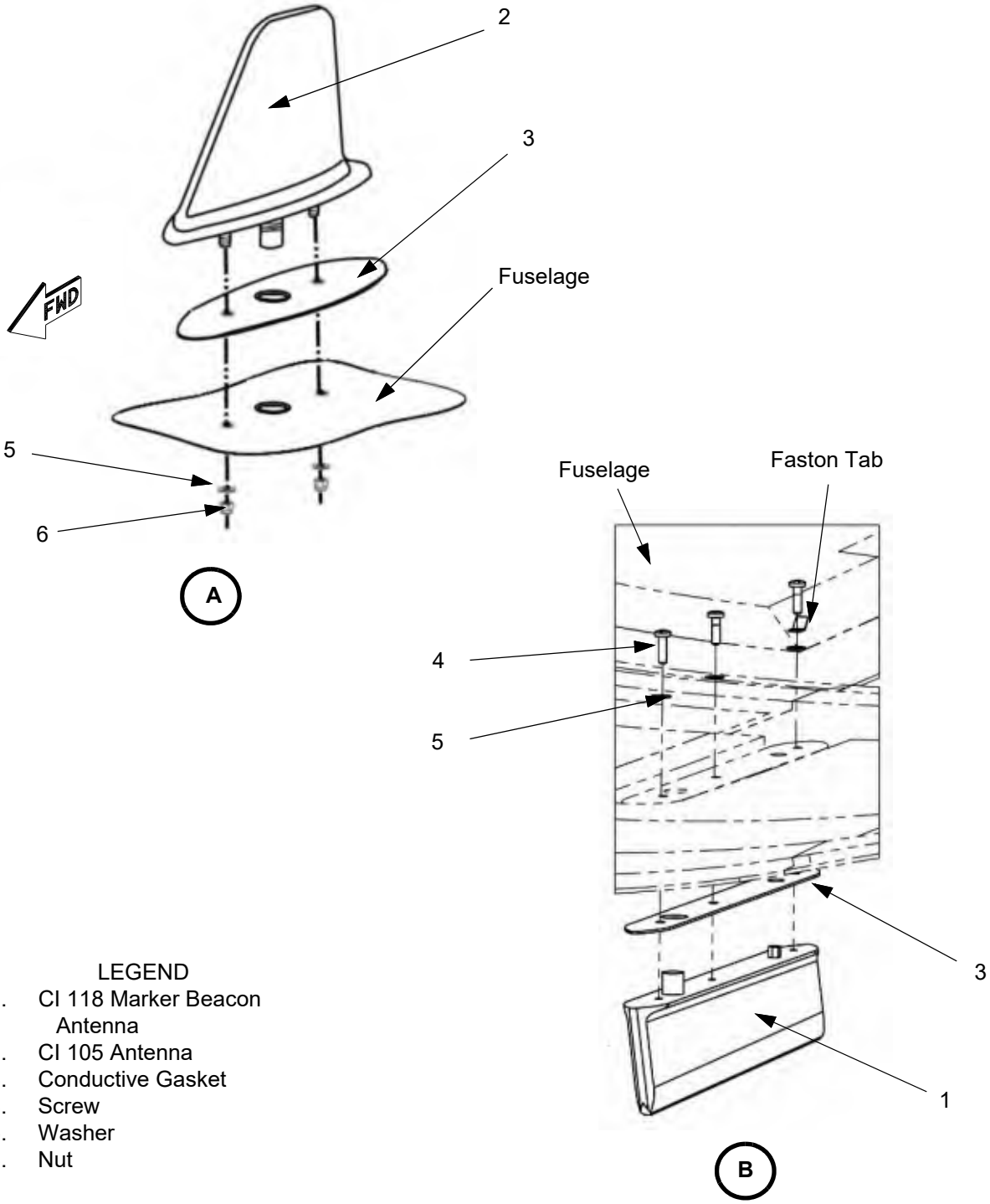

LEGEND

1. CI 118 Marker Beacon Antenna
2. CI 105 Antenna
3. Conductive Gasket
4. Screw
5. Washer
6. Nut

D. Antenna Cables

Refer to Chapter 34-40.

This Page Intentionally Left Blank

CHAPTER 35

Oxygen

This Page Intentionally Left Blank

List of Effective Pages

Chapter/Section	Page Number	Effective Date
35-Title	Page 1	02 Jan 2020
35-Title	Page 2	02 Jan 2020
35-LOEP	Page 1	10 Jul 2025
35-LOEP	Page 2	02 Jan 2020
35-TOC	Page 1	10 Jul 2025
35-TOC	Page 2	02 Jan 2020
35-00	Page 1	10 Jul 2025
35-00	Page 2	13 Apr 2020
35-00	Page 3	02 Jan 2020
35-00	Page 4	10 Jul 2025
35-00	Page 5	10 Jul 2025
35-00	Page 6	10 Jul 2025
35-00	Page 7	10 Jul 2025
35-00	Page 8	02 Jan 2020
35-00	Page 9	16 May 2022
35-00	Page 10	16 May 2022
35-00	Page 11	16 May 2022
35-00	Page 12	16 May 2022
35-00	Page 13	02 Jan 2020
35-00	Page 14	02 Jan 2020
35-00	Page 15	02 Jan 2020
35-00	Page 16	02 Jan 2020
35-00	Page 17	02 Jan 2020
35-00	Page 18	11 Nov 2020
35-00	Page 19	02 Jan 2020
35-00	Page 20	14 Jul 2021
35-00	Page 21	02 Jan 2020
35-00	Page 22	02 Jan 2020
35-00	Page 23	02 Jan 2020
35-00	Page 24	08 Apr 2024
35-00	Page 25	02 Jan 2020
35-00	Page 26	14 Jul 2021

This Page Intentionally Left Blank

CHAPTER 35

Table of Contents

List of Effective Pages ..... 35-LOEP / Page 1
Table of Contents ..... 35-TOC / Page1

Paragraph **Page Number**

Oxygen

1. General ..... 35-00 / Page 1
2. Maintenance Practices ..... 35-00 / Page 4
   - A. Safety Guidelines for Servicing the Oxygen System ..... 35-00 / Page 4
   - B. Oxygen System Purging ..... 35-00 / Page 4
   - C. Oxygen Bottle De-Pressurization ..... 35-00 / Page 5
   - D. Leak Test ..... 35-00 / Page 5
   - E. Operational Check ..... 35-00 / Page 6
   - F. Oxygen Cylinder ..... 35-00 / Page 6
   - G. 5-Year Hydrostatic Test ..... 35-00 / Page 7
   - H. Passenger Mask Deployment System (MDS) ..... 35-00 / Page 9
   - I. Crew Masks ..... 35-00 / Page 12
   - J. Plumbing ..... 35-00 / Page 14
   - K. Low Pressure Switch ..... 35-00 / Page 18
   - L. Altitude Switch ..... 35-00 / Page 20
   - M. Solenoid Valve ..... 35-00 / Page 21
   - N. Crew Mask Quick Connect Coupler ..... 35-00 / Page 22
   - O. Fill Port ..... 35-00 / Page 23
   - P. Pressure Gauge (SN: K003-K036 Only) ..... 35-00 / Page 24
   - Q. Over-Pressure / Over-Fill Relief Valve ..... 35-00 / Page 26
   - R. Altitude Switch Operational Check ..... 35-00 / Page 26

This Page Intentionally Left Blank

OXYGEN

1. General

This airplane has an oxygen system designed for two crew members and up to four passengers. The system provides 2 hours of oxygen to the crew and 10 minutes of oxygen for all four passengers.

The system has an oxygen cylinder with regulator, a pressure transducer, a service port, a pressure gauge at the service port (K003-K036 only), an over-pressure/over-fill relief disc, an altitude switch, two low pressure switches, distribution tubing, and oxygen masks.

Oxygen flow is controlled by the OXYGEN BOTTLE and EMERG OXYGEN switches on the left switch panel. Setting the OXYGEN BOTTLE switch to ON allows low pressure oxygen to flow to the crew masks and the passenger mask solenoid valve. Crew oxygen is provided through two quick don masks with on-demand regulators with EMGCY (Emergency), 100%, and N (Normal) settings. Setting the EMERG OXYGEN switch to ON opens the passenger mask solenoid valve allowing low pressure oxygen to drop the passenger masks. Flow to each passenger mask will only occur once the lanyard is pulled and the pintle pin is pulled from the mask receptacle.

(1) Oxygen Cylinder - 40 cubic ft. capacity with a nominal working pressure of 1850 psi.

The cylinder has a seamless aluminum core over-wrapped with Kevlar.

(2) Regulator - An Electrically Actuated Regulator (EAR) is mounted directly to the oxygen cylinder and provides the pilot with remote control from a switch on the instrument panel. The EAR drives an ON/OFF lever using a brushless DC motor and uses limit switches to remove power from the motor and send the state of the valve to the avionics suite. When the lever is in the ON position, high-pressure oxygen from the cylinder is reduced in pressure then flows to the low pressure outlets. In the OFF position, oxygen does not flow to the low pressure outlet ports and they are vented to ambient pressure.

There are three high pressure connections (high pressure safety relief port, indication outlet port, and cylinder fill port) and two low pressure connections (low pressure relief port and low pressure outlet).

A pressure transducer is installed on the high pressure indication port that sends oxygen cylinder pressure information to the crew through avionics suite

(3) Tubing - Stainless steel tubing routes low pressure oxygen from the EAR to the passenger Mask Deployment System (MPS) and the crew oxygen quick connect outlets.

(4) Flexible Lines - Flexible lines connect the EAR to the fill port and to the over-pressure/over-fill relief valve.

(5) Fill Port - The fill port is a brass fitting with an integral check valve and orifice. The orifice is sized (based on oxygen cylinder size) to proved an optimum oxygen cylinder fill rate while minimizing cylinder heating. The check valve prevents contamination of the oxygen system.

A pressure gauge is connected to the fill port to aid in oxygen cylinder refilling.

(6) Over-Pressure/Over-fill Relief Valve - An over-pressure/over-fill Relief valve is used to discharge the oxygen system if the system is over pressurized. The valve is connected to the high pressure safety relief port by a flexible line, is installed in the bottom of the fuselage, and vents to the outside of the cabin.

The relief valve has a replaceable Overboard Discharge Indicator (ODI) that will dislodge when the line pressure reaches 80 psig ± 30 psig and is vented through the relief valve. The ODI is colored green to be more visible during the preflight inspection.

(7) Altitude Switch - A normally open barometric altitude switch that closes at a cabin altitude of 14500 ft ± 500 ft is installed in the oxygen system. When the switch closes the regulator opens the low pressure outlet to provide oxygen to the passenger mask deployment system.

(8) Low Pressure Switch - There are two low pressure switches in the oxygen system (one for the passenger supply circuit and one for the crew supply circuit). These switches notify the pilot through the avionics suite when the crew and passengers have oxygen available.

K003-K085 (except K014), refer to the current revision of the E1000 Wiring Manual, P/N SK05000002.

K014, K086 and on, refer to the current revision of the E1000 Wiring Manual, P/N SK05003002.

Figure 35-00.1: Oxygen System

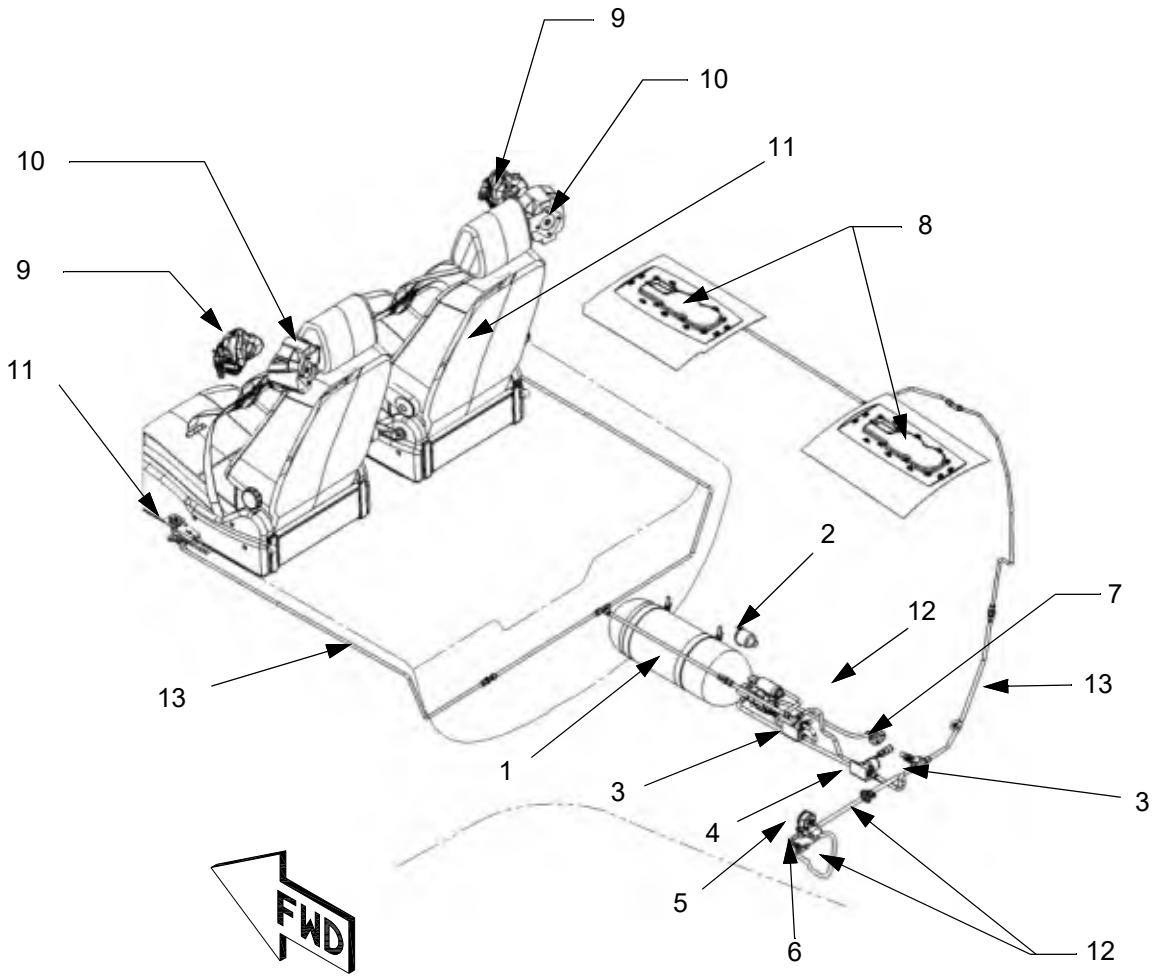

LEGEND

1. Oxygen Cylinder with Regulator
2. Altitude Switch
3. Low Pressure Switch
4. Solenoid Valve
5. Fill Port
6. Pressure Gauge (K003-K036)
7. Over-Pressure/ Over-Fill Relief Valve
8. Passenger Mask Delivery System
9. Crew Mask
10. Mask Holder
11. Quick Connect Coupler
12. High Pressure Flex Line
13. Low Pressure Tubing

2. Maintenance Practices

A. Safety Guidelines for Servicing the Oxygen System

The greatest potential hazard is fire and explosion when servicing and maintaining oxygen equipment. If conditions are favorable, gaseous oxygen will cause oil, grease, and other combustibles to burn or explode. Materials that do not normally burn in air will burn in an oxygen rich atmosphere. Refer to FAA Advisory Circular 43.13-1B/1 or subsequent version and this chapter.

(1) Parts, Tools, and Equipment Cleanliness - Oxygen servicing tools and equipment must be kept clean using anhydrous ethyl alcohol, isopropyl alcohol, or other suitable oxygen safe cleaning agent. Protect cleaned equipment and tools using caps, plugs, or covers and store them in a clean storage area.

(2) Personnel Cleanliness - Personnel must be clean and free of lotions or lip balm. All clothing must be clean and free of hydraulic fluid, oil, fuel, grease, or other combustible material. Hands and face should be thoroughly washed before handling any oxygen equipment or servicing tools.

(3) Electrical Power - Disconnect all electrical power from the airplane. Do not connect or disconnect the ground power supply during oxygen servicing. When charging the oxygen system, do not operate any electrical switches unless absolutely necessary.

(4) Grounding - Ensure the airplane, oxygen system, and servicing equipment are grounded before connecting to the oxygen fill port.

(5) Ignition Sources - Smoking near the airplane is prohibited during oxygen servicing. Avoid making sparks.

(6) Fueling - Do not service or do maintenance on the oxygen system while the airplane is being fueled or serviced with other flammable substances.

(7) Oxygen System Charging - Charge the oxygen system slowly. Rapid charging can generate heat.

(8) Oxygen System Pressure - Do not over-pressurize the oxygen system.

B. Oxygen System Purging

Purge the oxygen system when a new bottle is installed, the system pressure drops below 50 psig, or if the lines are left open for more than 5 minutes. Use only aviator's oxygen conforming to MIL-O-27210 for system purging.

WARNING: Do not use medical or industrial quality oxygen. They contain excessive moisture that could freeze and cause malfunction of the oxygen system during flight.

(1) Service the oxygen bottle (refer to Chapter 12-10).

(2) Connect external electrical power to the airplane (refer to Chapter 24-40).

(3) Set the BATT 1 and BATT 2 switches to ON.

(4) Set the OXYGEN BOTTLE switch to ON.

(5) Set the pilot and copilot oxygen masks to EMGCY.

CAUTION: Do not let the bottle pressure drop below 50 psi while performing this procedure. Stop and service the bottle as needed to perform the system purge.

(6) Purge the system for 10 minutes.

Note: Keep the airplane entry door open for air circulation.

(7) Set the pilot and copilot oxygen masks to N (Normal).
(8) Service the oxygen bottle (refer to Chapter 12-10).

C. Oxygen Bottle De-Pressurization

The oxygen bottle must be de-pressurized if it is to be removed for hydrostatic testing.

(1) Connect external electrical power to the airplane (refer to Chapter 24-40).
(2) Set the BATT 1 and BATT 2 switches to ON.
(3) Set the OXYGEN BOTTLE switch to ON.
(4) Set the pilot and copilot oxygen masks to EMGCY.
(5) Wait until all the oxygen in the system has discharged.
(6) Set the pilot and copilot oxygen masks to N (Normal).
(7) Set the OXYGEN BOTTLE switch to off.
(8) Set the BATT 1 and BATT 2 switches to off.
(9) Disconnect external electrical power from the airplane (refer to Chapter 24-40).

D. Leak Test

Leak testing must be done whenever any components or plumbing in the oxygen system are removed and replaced. Apply oxygen safe leak detection compound (refer to MIL-L-25567) to the fittings and connections then observe the tested area for a minimum of 30 seconds. The presence of a leak is indicated by bubbles or deformation of the leak detection compound.

(1) Service the oxygen bottle (refer to Chapter 12-10).
(2) Connect external electrical power to the airplane (refer to Chapter 24-40).
(3) Set the BATT 1 and BATT 2 switches to ON.
(4) Set the OXYGEN BOTTLE switch to ON.
(5) Apply oxygen-safe leak check solution to all lines and fittings.
(6) If no leaks are found, do the steps that follow:
    (a) Set the OXYGEN BOTTLE switch to off.
    (b) Set the BATT 1 and BATT 2 switches to off.
    (c) Disconnect external electrical power from the airplane (refer to Chapter 24-40).
    (d) Remove all leak test compound from the fittings and connections when testing is done and the system is leak free.

(7) If leaks are found, check for proper torque and perform the leak test again.

(8) If leaks persist, do the steps that follow:

(a) Set the OXYGEN BOTTLE switch to off.

(b) Set the BATT 1 and BATT 2 switches to off.

(c) Release remaining pressure from the system by setting the pilot or copilot mask to EMGCY. After the pressure has bled off, set the mask to N (Normal).

CAUTION: A SMALL AMOUNT OF OXYGEN WILL REMAIN IN THE SERVICE LINE. USE CAUTION WHEN REMOVING THIS LINE.

(d) Examine any leaking lines or fittings for damage. If necessary, replace lines or fittings and perform the leak check again.

(e) Remove all leak test compound from the fittings and connections when testing is done and the system is leak free.

E. Operational Check

(1) Service the oxygen bottle (refer to Chapter 12-10).

(2) Connect external electrical power to the airplane (refer to Chapter 24-40).

(3) Set the BATT 1 and BATT 2 switches to ON.

(4) Set the OXYGEN BOTTLE switch to ON.

(5) Press the PRESS TO TEST button on the pilot's or copilot's mask to verify oxygen flow.

(6) Set the OXYGEN BOTTLE switch to off.

(7) Press the PRESS TO TEST button on the pilot's or copilot's mask to verify no oxygen flows.

(8) Set the BATT 1 and BATT 2 switches to off.

(9) Disconnect external electrical power from the airplane (refer to Chapter 24-40).

F. Oxygen Cylinder

(1) Removal

(a) Pull the OXY PANEL and PAX OXY circuit breakers.

(b) Depressurize the oxygen system (refer to 35-00.2.C).

(c) Remove the passenger cabin carpet and flooring. Refer to Chapter 25-20 and 53-20.

(d) Ensure the oxygen regulator is in the OFF position.

(e) Disconnect the wiring harness from the transducer and valve.

CAUTION: USE ONLY NEW OR CLEANED CAPS AND PLUGS ON THE OXYGEN SYSTEM.

(f) Disconnect the low pressure line, service line, and over-pressure line from the regulator. Immediately cap or plug the open ends of the tubing and fittings to protect against contamination.

(g) Remove the safety wire and loosen the two clamps attaching the oxygen cylinder to the fuselage.

(h) Remove the oxygen bottle.

(2) Installation

(a) Put the oxygen bottle into position on the clamps.

(b) Orient the cylinder as shown in figure 35-00.2.

(c) Apply anti-seize thread compound (MIL-PRF-83483) to the threads of the oxygen cylinder band clamps then hand tighten the wing nuts.

(d) Safety the wing nuts using 0.032” safety wire.

(e) Remove the caps and plugs and connect the low pressure line, service line, and over-pressure line to the regulator.

(f) Connect the wiring harness to the transducer and valve.

(g) Service the bottle (refer to Chapter 12-10).

(h) Do the leak test, refer to chapter 35-00.D.

(i) Do the operational check, refer to chapter 35-00.E

(j) Install the passenger cabin flooring and carpet. Refer to Chapter 25-20 and 53-20.

(k) Service the oxygen system (refer to Chapter 12-10).

G. 5-Year Hydrostatic Test

Hydrostatically test the oxygen cylinder every five years from the date of manufacture of the cylinder.

Figure 35-00.2: Oxygen Cylinder

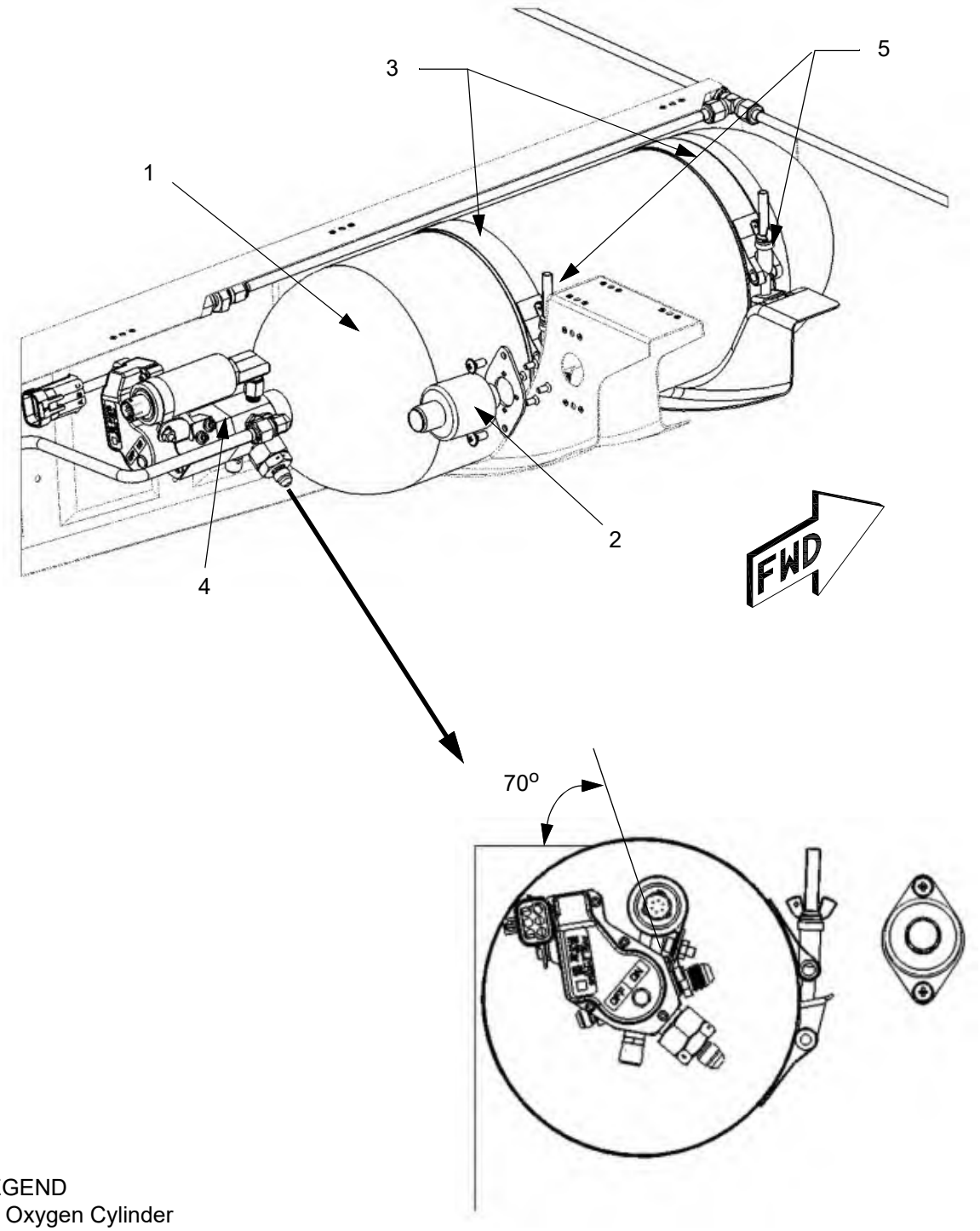

LEGEND
1. Oxygen Cylinder
2. Altitude Switch
3. Band Clamp
4. Regulator
5. Wing Nut

H. Passenger Mask Deployment System (MDS)

When oxygen is supplied to the MDS, system pressure inflates an internal silicone diaphragm that forces the oxygen mask out of its storage cartridge. When the mask is pulled, a lanyard pulls a pintle pin from a valve letting oxygen flow to the mask.

Each cartridge has an armed, test, and removal position accessed by rotating the cartridge on the manifold and plate assembly. The cartridge is held in the arm and test positions with a spring loaded pin. The test setting lets the oxygen system be pressurized without deploying the masks.

Note: Manifold removal and replacement procedures are given but not normally required for MDS servicing and maintenance.

(1) Removal

(a) Ensure the EMERG OXYGEN switch is in the off position.

(b) Pull the OXY PANEL and PAX OXY circuit breakers.

(c) Remove the overhead panel oxygen mask cover.

(d) Remove the two MDS cartridges by pulling the spring loaded pin then twisting them counter clockwise until they release from the plate.

(e) Remove the overhead panel (refer to Chapter 25-50).

(f) Remove the four screws attaching the MDS access cover to the fuselage then remove the access cover.

(g) Disconnect the oxygen system tubing from the MDS.

(h) Cap and plug the MDS plumbing connection.

(i) Remove the six screws attaching the MDS manifold and plate assembly to the fuselage.

(j) Remove the MDS manifold and plate assembly.

(2) Installation

(a) Attach the MDS manifold and plate assembly to the fuselage using six screws.

(b) Remove the caps and plugs and connect the oxygen system plumbing to the MDS manifold and plate assembly.

(c) Attach the MDS access cover using four screws.

(d) Install the overhead panel (refer to Chapter 25-50).

(e) Install the two MDS cartridges by twisting them clockwise to the ARM position. Make sure the pin engages the MDS plate.

(f) Install the overhead panel oxygen mask cover.

(g) Set the OXY PANEL and PAX OXY circuit breakers.

(3) MDS Cartridge Removal

(a) Ensure the EMERG OXYGEN switch is in the off position.

(b) Pull the OXY PANEL and PAX OXY circuit breakers.

(c) Remove the overhead panel oxygen mask cover.

(d) Pull the spring loaded pin and rotate the MDS cartridges counter-clockwise until it releases from the MDS plate.

(4) MDS Cartridge Installation

(a) Put the MDS cartridge in position and rotate it clockwise to the ARM position. Make sure the pin engages the MDS plate.

(b) Install the overhead panel oxygen mask cover.

(c) Reset the OXY PANEL and PAX OXY circuit breakers.

(5) MDS Cartridge Repacking

If the MDS cartridges are deployed they must be repacked before the next flight.

(a) Remove the MDS cartridge.

(b) Inspect then disinfect the mask and cartridge.

(c) Repack the cartridge in accordance with the current revision of Avox Systems Mask Deployment System (MDS)-Mask Packing Procedure, Drawing No. 10014485.

(6) Inspection and Test

(a) Deploy the passenger masks as follows:

i. Connect external electrical power to the airplane (refer to Chapter 24-40).

ii. Set the BATT 1 and BATT 2 switches to ON.

iii. Set the OXYGEN BOTTLE switch to ON.

iv. Set the EMERG OXYGEN switch to ON.

(b) Inspect each passenger mask as follows:

i. Pull the lanyard to pull the pintle pin from the mask receptacle and start airflow to the mask. Verify oxygen flow from the mask.

ii. Visually inspect for mechanical damage such as components that are torn, broken, frayed, or missing.

iii. Examine all parts for changes in material properties, such as loss of flexibility, permanent deformation, or kinks.

iv. Confirm the donning instructions are intact and can be read.

v. Confirm the tubing is undamaged and properly connected.

vi. Confirm all mask flapper valves are in place, round and not distorted.

vii. Confirm the reservoir bag and tube are not discolored.

viii. Confirm the headstrap will stretch when you pull it and go back to the initial size.

ix. Visually check for solid or liquid contamination of the entire passenger mask including the internal and external surfaces of the reservoir bag and tube.

(c) Repack the cartridge in accordance with the current revision of Avox Systems Mask Deployment System (MDS)-Mask Packing Procedure, Drawing No. 10014485.

(d) Passenger mask cleaning and disinfecting.

CAUTION: DO NOT DISASSEMBLE THE RESERVOIR BAG AND TUBE. YOU MAY WEAKEN THE PASSENGER MASK WHICH MAY CAUSE THE MASK TO COME APART WHEN THE MASK IS PULLED DURING DEPLOYMENT.

CAUTION: DO NOT CLEAN THE INTERNAL OR EXTERNAL SURFACE OF THE RESERVOIR BAG AND TUBE. YOU MAY CAUSE DAMAGE TO THE BAG AND TUBE MATERIALS OVER TIME.AND DECREASE THE SERVICE LIFE OF THE PASSENGER MASK.

i. Clean all surfaces of the passenger mask, except the reservoir bag and tube using a mild soap and water solution.

ii. Flush all surfaces of the passenger mask, except the reservoir bag and tube, using clean water to remove the soap and water solution.

iii. Shake the drops of water from the passenger mask.

iv. Disinfect the passenger mask using a solution of Benzalkonium Chloride in water applied to a lint-free cloth.

Note: The recommended solution is 3 parts Benzalkonium Chloride to 1 part distilled water.

v. Flush all surfaces of the passenger mask, except the reservoir bag and tube, using clean water to remove the disinfectant solution.

vi. Shake the drops of water from the passenger mask and dry the mask using air that is clean, dry and oil-free.

vii. Lightly dust only the outside of the passenger mask face-piece using Neo-Novacite powder (AVOX P/N 00-736).

(e) Stow the passenger masks in accordance with the current revision of Zodiac drawing number 10014485.

(f) Passenger mask overhaul.

Overhaul or replace the passenger mask every 6 years from the date of manufacture.

I. Crew Masks

(1) Inspection and Test

(a) Remove the mask from the stowage cup.

(b) Hold the mask and inflate the harness using the red tabs.

(c) Check that the oxygen flow indicator on the supply hose indicates oxygen is flowing.

(d) Position the mask on your head.

(e) Check that breathing is free and unrestricted in N (Normal), 100%, and EMGCY (Emergency) modes.

(f) Test the microphone as follows:

i. Connect external electrical power to the airplane (refer to Chapter 24-40).

ii. Set BATT 1 and BATT 2 switches to ON.

iii. Set the MASK MICS switch to ON

iv. Transmit from either VHF COM on the pilot's mask and make sure the transmission is clear and audible.

v. Transmit from either VHF COM on the co-pilot's mask and make sure the transmission is clear and audible.

vi. Set the MASK MICS switch to off

vii. Set BATT 1 and BATT 2 switches to off.

viii. Disconnect external electrical power from the airplane (refer to Chapter 24-40).

(g) Stow the mask.

(2) **C**leaning and Disinfecting

Clean and disinfect the crew masks in accordance with the latest revision of Safran SIL124.

(3) Crew mask overhaul.

Overhaul or replace the passenger mask every 5 years from the date of manufacture.

Figure 35-00.3: Passenger Mask Delivery System (MDS)

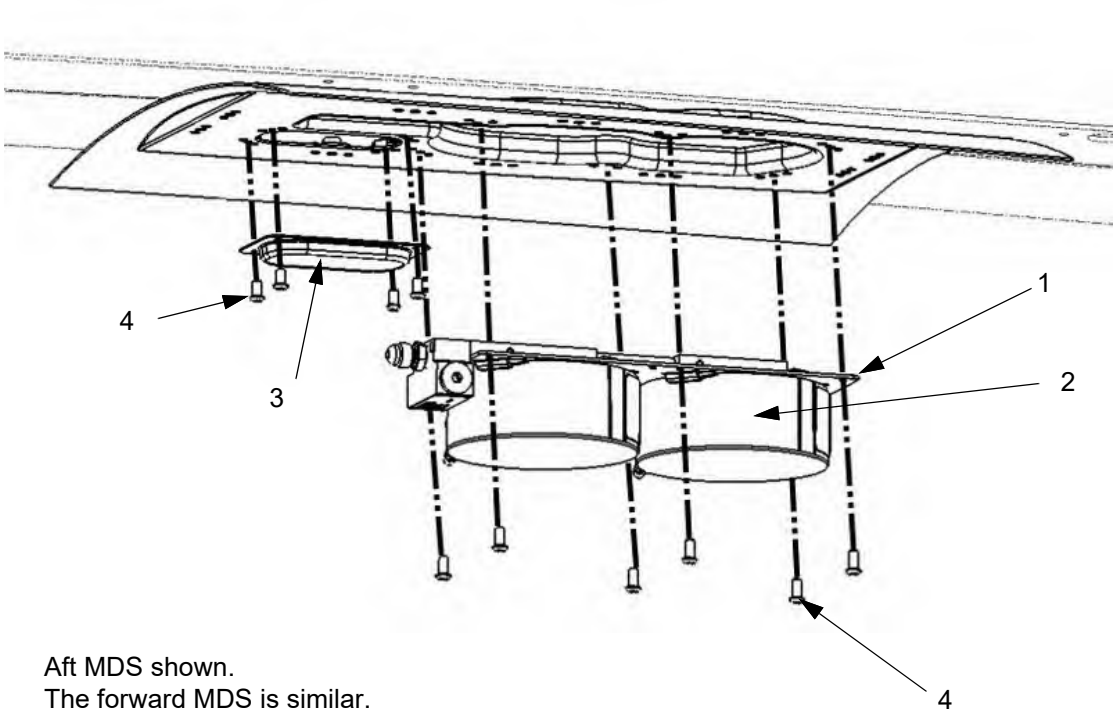

Aft MDS shown.
The forward MDS is similar.

LEGEND
1. Base Plate Manifold
2. Mask Cartridge
3. MDS Access Cover
4. Screw

J. Plumbing

The interior of all tubing and fittings must be kept clean and free from contamination. Threads on fittings must be kept clean and free from damage. All open ports and tubing must be capped or plugged using polyethylene plugs or caps or in a manner that ensures cleanliness and protection. The plugs or caps must be green or distinguished in some other manner to identify them for use on oxygen equipment only.

- Do not use pressure sensitive materials, adhesives, hot dip coatings, soft plastic, rubber, paper, or masking or self-sealing tapes. Use of high density plastic materials such as Teflon or polyethylene is acceptable.
- Do not let the interior of any oxygen system component be exposed for more than 10 minutes. Exposure longer than 10 minutes requires the component be cleaned.
- To clean an oxygen system component, remove contamination using canned or dry filtered air followed by cleaning compound conforming to MIL-C-8638, heavy duty degreaser C manufactured by Micro Care, trichloroethylene, acetone, or hexane. Any solvents used must be fresh and not have been previously used for any other purpose. Blow the tubing and fittings clean and dry using a stream of nitrogen. Immediately inspect the component visually for cleanliness then install clean protective plugs or caps, and seal in a clean plastic bag.
- Oxygen system components must be shipped or stored in sealed clean plastic bags clearly identified with title, part number, other required information, and a statement similar to “CLEANED FOR OXYGEN SERVICE. DO NOT LET PETROLEUM CONTAMINANTS OF ANY KIND BE USED OR STORED ON OR ABOUT THIS CONTAINER.” Identification tags must be attached to the packaging in a way that permits identification of the component without breaking the packaging or the tag.

(1) Removal

(a) Depressurize the oxygen system (refer to 35-00.2.C).

(b) Remove the crew and passenger seats (refer to Chapter 25-10 and 25-20).

(c) Remove the passenger cabin carpet and flooring (refer to Chapter 25-10 and 53-20).

(d) Remove the overhead finish panel and the left and right lower finish panels at the wing spar saddle as needed to access the oxygen lines. Refer to Chapter 25-50.

(e) Cut the tie wraps securing the tubing or flex line.

(f) Disconnect the tubing from the regulator then immediately cap or plug the open ends of the tubing and fittings to protect against contamination.

(g) Disconnect the tubing at the fill port, the over-pressure/over-fill relief valve, and the crew quick release fittings then immediately cap or plug the open ends of the tubing and fittings to protect against contamination.

(h) Remove the tubing or flex line.

(2) Installation

(a) Move the tubing or flex line into position then connect it to the regulator, fill port, and over-pressure/over-fill relief valve, as applicable.

(b) Secure the tubing or flex lines using tie wraps.

(c) Service the oxygen system (refer to Chapter 12-10).

(d) Do a leak test (refer to 35-00.2.D).

(e) If leakage is found, discharge the oxygen then re-torque any leaking fittings and leak test until the leak is corrected. If the leak persists, inspect the lines and fittings for damage and replace as needed.

(f) Mark all new tubing and flex lines with breathing oxygen label tape, per MIL-STD-595B and MIL-STD-1247C, located within 3 inches of all fittings and at intervals along the lines not to exceed 48 inches.

(g) Purge the system (refer to 35-00.2.B).

(h) Install the passenger cabin flooring and carpet. Refer to Chapter 25-20 and 53-20.

(i) Install the interior finish panels (refer to Chapter 25-50).

(j) Install the crew and passenger seats (refer to Chapter 25-10 and 25-20.

(k) Service the oxygen system (refer to Chapter 12-10).

Figure 35-00.4: Low Pressure Plumbing Circuit

LEGEND
1. Stainless Steel Tubing
2. Low Pressure Switch
3. Solenoid
4. Quick Connect Coupler
5. Coupler Fitting
6. Elbow Fitting
7. Tee Fitting
8. Clamp

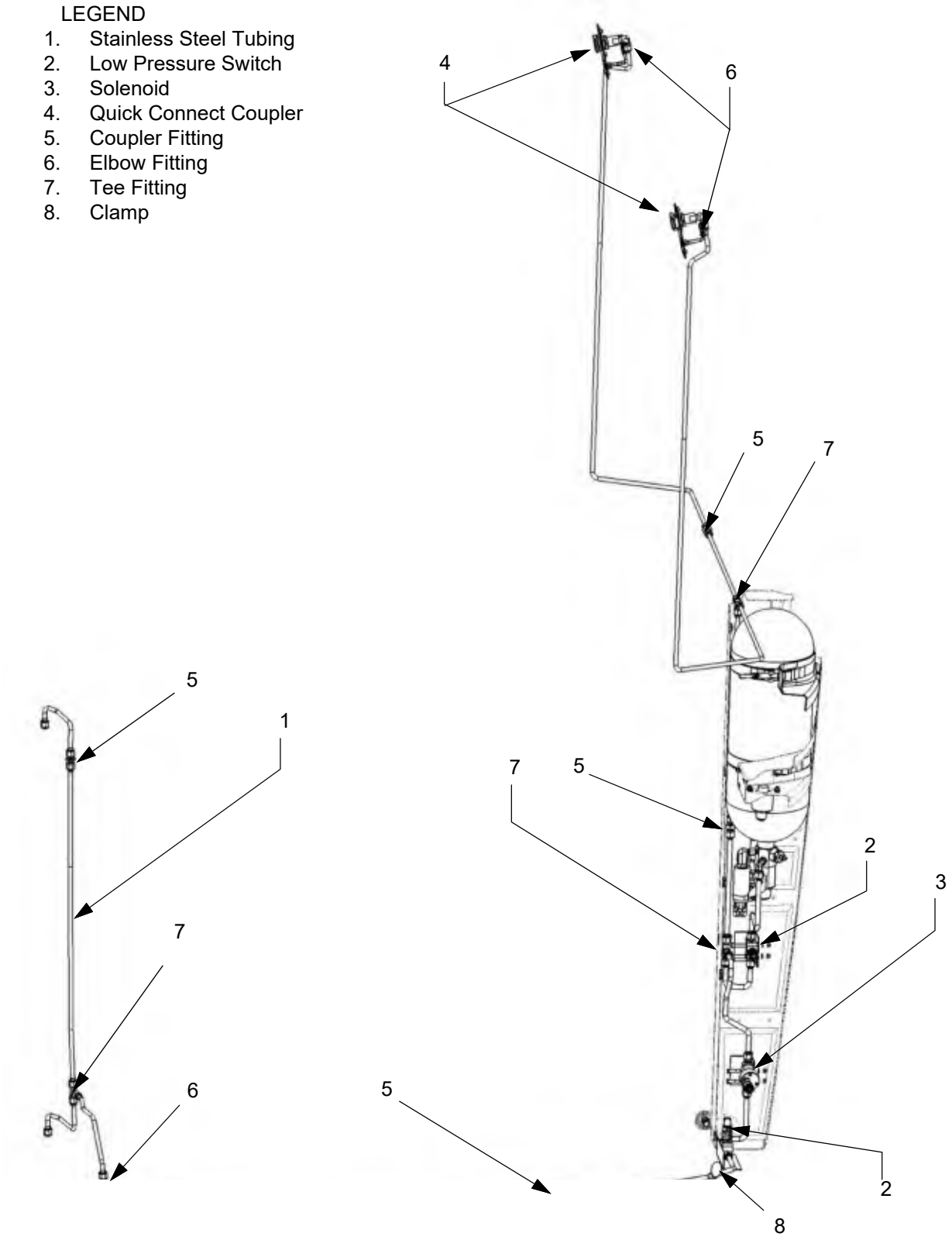

Figure 35-00.5: High Pressure Plumbing Circuit

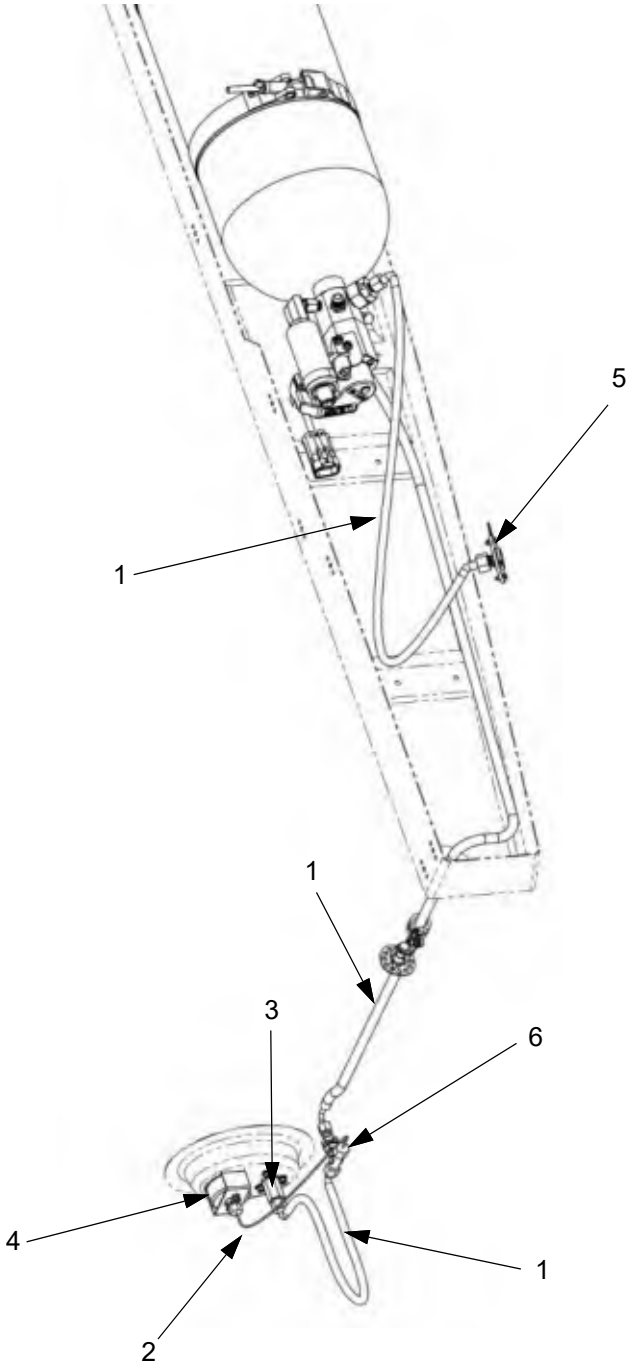

LEGEND
1. Flex Line
2. Capillary Line
3. Fill Port
4. Pressure Gauge
5. Over-Pressure / Over-Fill Relief Valve
6. Tee Fitting

K. Low Pressure Switch

(1) Removal

(a) Depressurize the oxygen system.

(b) Remove the passenger cabin carpet and floor. Refer to Chapter 25-20 and 53-20.

(c) Disconnect the wiring harness from the low pressure switch.

(d) Disconnect the tubing from the switch then immediately cap or plug the open ends of the tubing and switch to protect against contamination.

(e) Remove the two socket head screws, washers, and locknuts attaching the switch to the fuselage.

(f) Remove the switch.

(2) Installation

(a) Position the low pressure switch on its mount on the fuselage.

(b) Attach the switch using two socket head screws, washers, and locknuts.

(c) Connect the tubing.

(d) Connect the wiring harness.

(e) Remove the finish panel cover over the passenger mask canisters then rotate each canister to the test position.

(f) Charge then test the system for leakage.

(g) If leakage is found, discharge the oxygen and reinstall the switch until the leakage is corrected.

(h) Install the passenger cabin flooring and carpet. Refer to Chapter 25-20 and 53-20.

(i) Rotate each passenger mask canister to the operation position then install the finish panel cover.

(j) Service the system (refer to Chapter 12-10).

Figure 35-00.6: Low Pressure Switch

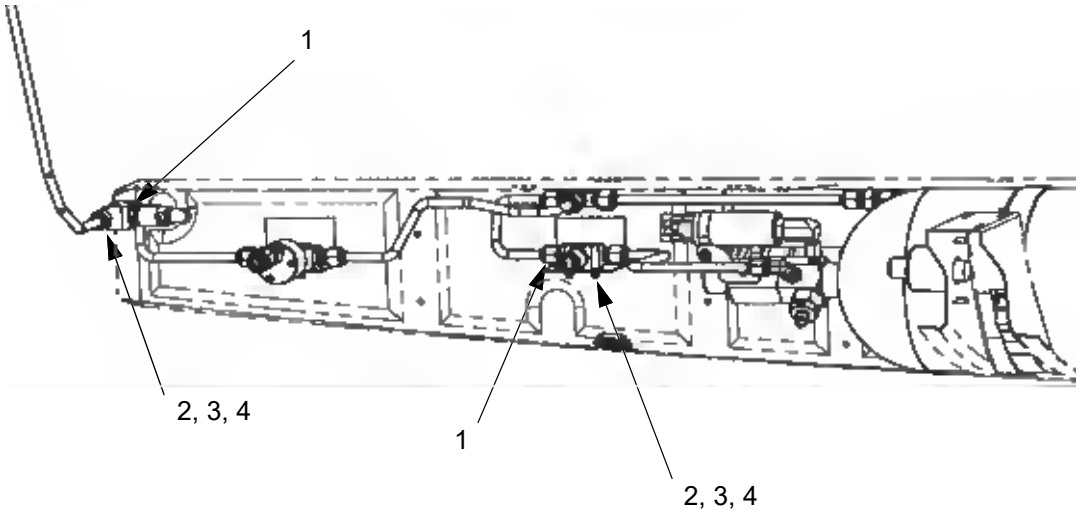

LEGEND
1. Low Pressure Switch
2. Washer
3. Socket Head Screw
4. Locknut

L. Altitude Switch

(1) Removal

(a) Remove the passenger cabin carpet and floor. Refer to Chapter 25-20 and 53-20.

(b) Disconnect the wiring harness from the altitude switch.

(c) Remove the two washer head screws attaching the altitude switch to the fuselage.

(d) Remove the switch.

(e) Remove the four screws attaching the mounting plate to the altitude switch then remove the mounting plate.

(2) Installation

(a) Attach the mounting plate to the altitude switch using four screws.

(b) Position the altitude switch on its mount on the fuselage.

(c) Attach the switch using two washer head screws.

(d) Connect the wiring harness to the altitude switch.

Note: Make sure the protective cover is removed from the cabin altitude sensing port of the cabin altitude switch.

(e) Remove the finish panel cover over the passenger mask canisters then rotate each canister to the test position.

(f) Do the operational check of the cabin altitude switch (refer to paragraph R, this chapter).

(g) Install the passenger cabin floor and carpet. Refer to Chapter 25-20 and 53-20.

(h) Rotate each passenger mask canister to the operation position then install the finish panel cover.

(i) Service the system (refer to Chapter 12-20), as required.

Figure 35-00.7: Altitude Switch

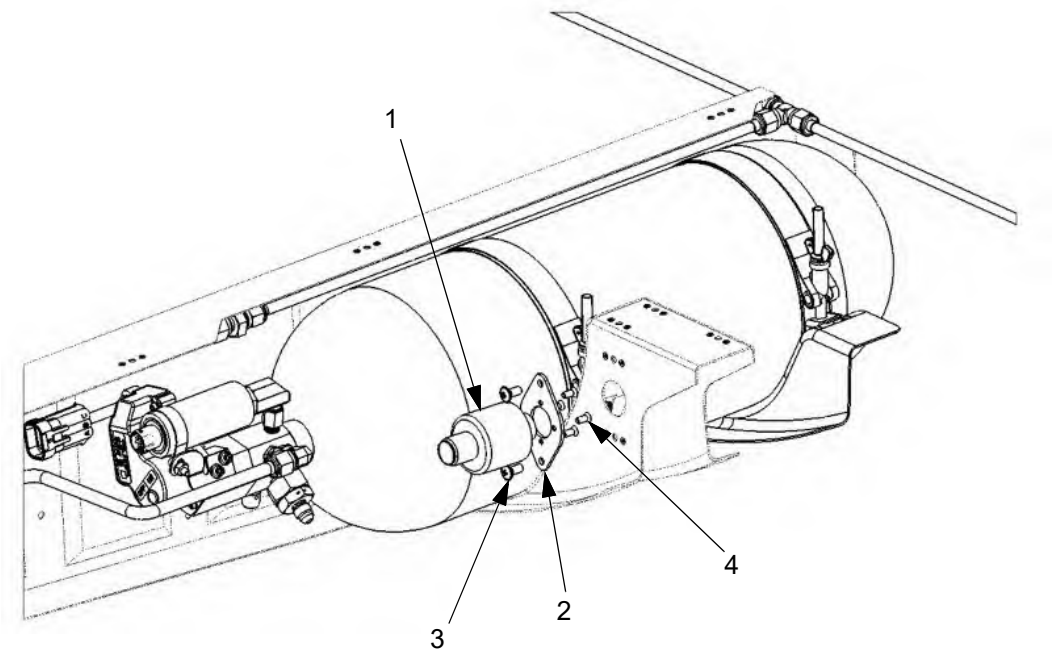

LEGEND
1. Altitude Switch
2. Mounting Plate
3. Socket Head Screw
4. Screw

M. Solenoid Valve

(1) Removal

(a) Depressurize the oxygen system.

(b) Remove the passenger cabin carpet and floor. Refer to Chapter 25-20 and 53-20.

(c) Disconnect the wiring harness from the solenoid valve.

(d) Disconnect the tubing from the solenoid valve then immediately cap or plug the open ends of the tubing and switch to protect against contamination.

(e) Remove the two washer head screws, washers, and locknuts attaching the Solenoid valve to the fuselage.

(f) Remove the solenoid valve.

(2) Installation

(a) Position the solenoid valve on its mount on the fuselage.

(b) Attach the valve using two socket head screws, washers, and locknuts.

(c) Connect the tubing.

(d) Connect the wiring harness.

(e) Remove the finish panel cover over the passenger mask canisters then rotate each canister to the test position.

(f) Charge then test the system for leakage.

(g) If leakage is found, discharge the oxygen and reinstall the solenoid valve until the leakage is corrected.

(h) Install the passenger cabin floor and carpet. Refer to Chapter 25-20 and 53-20.

(i) Rotate each passenger mask canister to the operation position then install the finish panel cover.

(j) Service the system (refer to Chapter 12-20).

Figure 35-00.8: Solenoid Valve

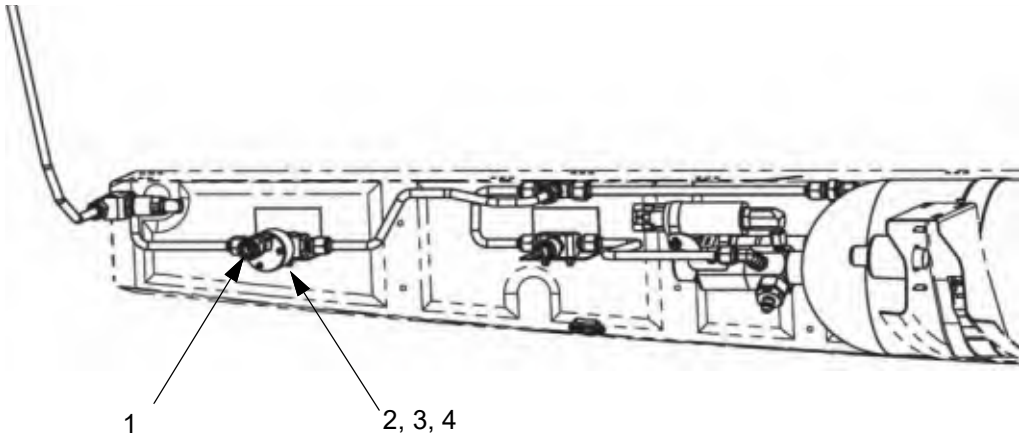

LEGEND
1. Solenoid Valve
2. Washer Head screw
3. Washer
4. Locknut

N. Crew Mask Quick Connect Coupler

(1) Removal

(a) Depressurize the oxygen system.

(b) Remove the crew seats (refer to Chapter 25-10).

(c) Remove the left or right lower finish panel at the wing spar saddle (refer to Chapter 25-50), as applicable.

(d) Disconnect the tubing and fitting from the quick connect coupler then immediately cap or plug the open ends of the tubing, fittings, and coupler to protect against contamination.

(e) Remove the jam nut holding the coupler to the mounting flange.

(f) Remove the quick connect coupler.

(2) Installation

(a) Insert the quick connect coupler to the mounting flange using a jam nut.

(b) Connect the fitting and tubing to the coupler.

(c) Remove the finish panel cover over the passenger mask canisters then rotate each canister to the test position.

(d) Charge then test the system for leakage.

(e) If leakage is found, discharge the oxygen and reinstall the coupler until the leakage is corrected.

(f) Install the left or right lower finish panel (refer to Chapter 25-50), as applicable.

(g) Install the crew seats (refer to Chapter 25-10).

(h) Rotate each passenger mask canister to the operation position then install the finish panel cover.

(i) Service the system (refer to Chapter 12-20).

O. Fill Port

(1) Removal

(a) Depressurize the oxygen system.

(b) Remove the aft cabin seats (refer to Chapter 25-20).

(c) Remove pilot side access panel on the top of the evaporator enclosure.

(d) Disconnect the flex hose from the fill port then immediately cap or plug the open ends of the flex hose and fill port to protect against contamination.

(e) Remove the three washer head screws, washers, and locknuts attaching the fill port to the evaporator enclosure.

(f) Remove the fill port.

(2) Installation

(a) Insert the fill port into the evaporator enclosure.

(b) Attach the fill port to the evaporator enclosure using three washer head screws, washers, and locknuts.

(c) Attach the flex hose to the fill port.

(d) Remove the finish panel cover over the passenger mask canisters then rotate each canister to the test position.

(e) Charge then test the system for leakage.

(f) If leakage is found, discharge the oxygen and reinstall the fill port until the leakage is corrected.

(g) Install the evaporator enclosure access panel.

(h) Install the aft passenger seats (refer to Chapter 25-20).

(i) Rotate each passenger mask canister to the operation position then install the finish panel cover.

(j) Service the system (refer to Chapter 12-20).

P. Pressure Gauge (SN: K003-K036 Only)

(1) Removal

(a) Depressurize the oxygen system.

(b) Remove the aft cabin seats (refer to Chapter 25-20).

(c) Remove pilot side access panel on the top of the evaporator enclosure.

(d) Disconnect the capillary line from the pressure gauge then immediately cap or plug the open ends of the line and gauge to protect against contamination.

(e) Remove the two nuts attaching the pressure gauge to the evaporator enclosure.

(f) Remove the pressure gauge.

(2) Installation

(a) Insert the pressure gauge into the evaporator enclosure.

(b) Attach the gauge to the evaporator enclosure using two nuts.

(c) Attach the capillary line to the pressure gauge. Torque both fittings 40 in-lbs.

(d) Remove the finish panel cover over the passenger mask canisters then rotate each canister to the test position.

(e) Charge then test the system for leakage.

(f) If leakage is found, discharge the oxygen and reinstall the pressure gauge until the leakage is corrected.

(g) Install the evaporator enclosure access panel.

(h) Install the aft passenger seats (refer to Chapter 25-20).

(i) Rotate each passenger mask canister to the operation position then install the finish panel cover.

(j) Service the system (refer to Chapter 12-20).

Figure 35-00.9: Fill Port and Pressure Gauge

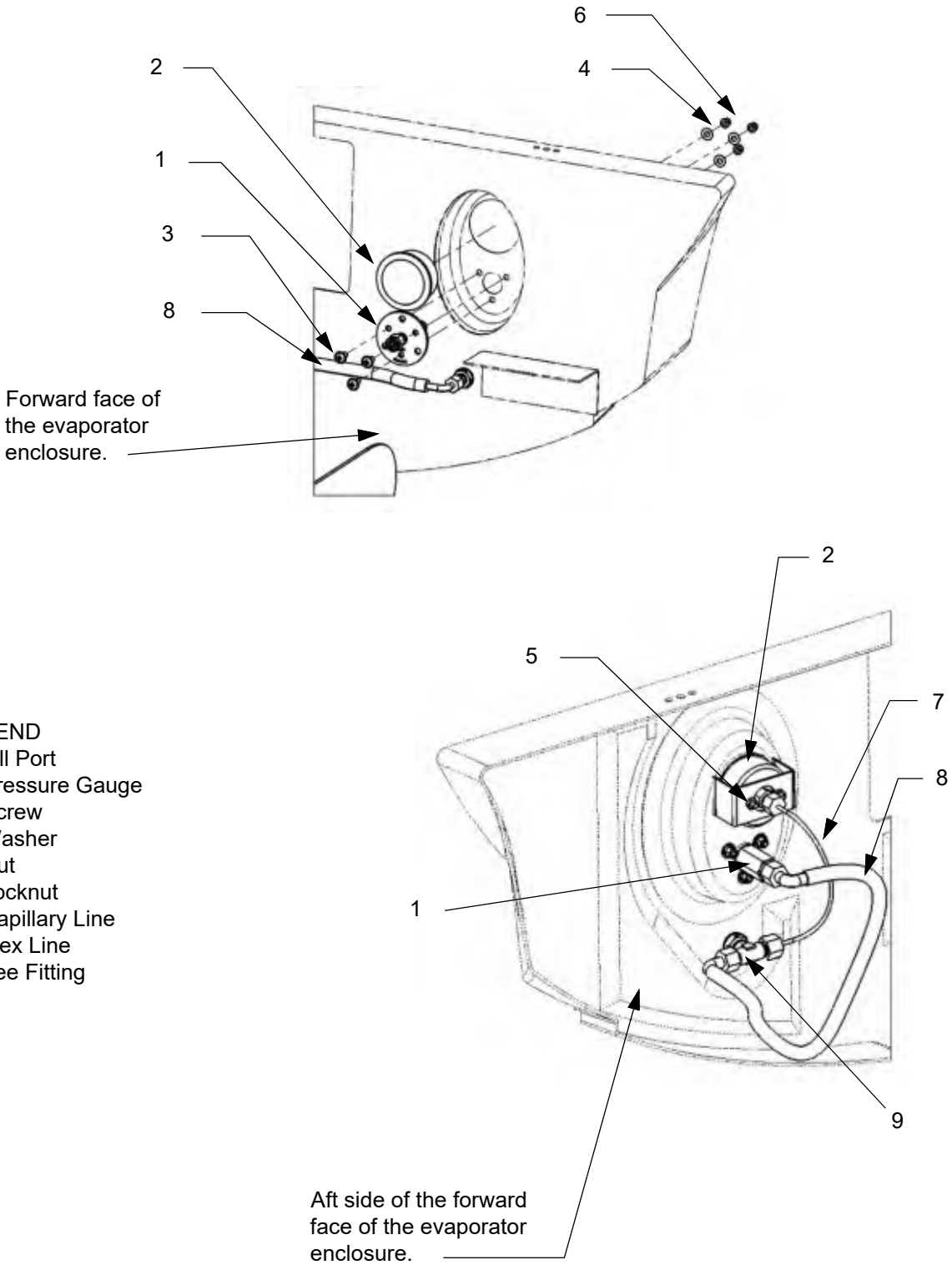

LEGEND

1. Fill Port
2. Pressure Gauge
3. Screw
4. Washer
5. Nut
6. Locknut
7. Capillary Line
8. Flex Line
9. Tee Fitting

Q. Over-Pressure / Over-Fill Relief Valve

The body of the relief valve is bonded to the fuselage and cannot be easily removed or replaced. Contact Epic Aircraft, LLC for removal and installation instructions.

The relief valve has a replaceable Overboard Discharge Indicator (ODI) that will dislodge when the line pressure reaches 80 psig ± 30 psig and is vented through the relief valve. The ODI is colored green to be more visible during the preflight inspection.

Replace a missing ODI by snapping the new disk into position.

R. Altitude Switch Operational Check

(1) Connect a calibrated vacuum source to the pressure sensing port of the altitude switch.
(2) Remove the mid and aft passenger seat oxygen mask covers.
(3) Put each mask in TEST mode by pulling down on the pin and rotating the cartridge to the TEST position.
(4) Connect external power (refer to the E1000 AMM PN SK05000000, chapter 24-40).
(5) Set the BATT 1 and BATT 2 switches to ON.
(6) Make sure the PAX OXY circuit breaker is in.
(7) Using the calibrated vacuum source, simulate a cabin altitude of 15,000’.
(8) When 15,000’ is reached, make sure the passenger oxygen valve moves from closed to open and the “PAX OXYGEN ON” CAS message appears.
(9) Reduce the cabin altitude to 14,500’.
(10) Make sure the passenger oxygen valve moves from open to closed and the “PAX OXYGEN ON” CAS message extinguishes.
(11) Reduce the cabin altitude to field elevation and disconnect the vacuum source.
(12) Rotate the mask cartridges to the ARM position and make sure the pin is reset.
(13) Reinstall the mid and aft passenger seat oxygen mask covers.
(14) Set the BATT 1 and BATT 2 switches to OFF.
(15) Disconnect external power (refer to the E1000 AMM PN SK05000000, chapter 24-40).

CHAPTER 39

Electrical Panels and Multipurpose Components

This Page Intentionally Left Blank

List of Effective Pages

Chapter/Section	Page Number	Effective Date
39-Title	Page 1	02 Jan 2020
39-Title	Page 2	02 Jan 2020
39-LOEP	Page 1	08 Sep 2026
39-LOEP	Page 2	08 Sep 2026
39-TOC	Page 1	20 Oct 2023
39-TOC	Page 2	02 Jan 2020
39-00	Page 1	10 Jul 2025
39-00	Page 2	02 Jan 2020
39-10	Page 1	08 Sep 2026
39-10	Page 2	08 Sep 2026
39-10	Page 3	08 Sep 2026
39-10	Page 4	08 Sep 2026
39-10	Page 5	08 Sep 2026
39-10	Page 6	08 Sep 2026
39-10	Page 7	08 Sep 2026
39-10	Page 8	08 Sep 2026
39-10	Page 9	08 Sep 2026
39-10	Page 10	08 Sep 2026
39-10	Page 11	08 Sep 2026
39-10	Page 12	08 Sep 2026
39-10	Page 12	08 Sep 2026
39-10	Page 14	08 Sep 2026
39-10	Page 15	08 Sep 2026
39-10	Page 16	08 Sep 2026
39-10	Page 17	08 Sep 2026
39-10	Page 18	08 Sep 2026
39-10	Page 19	08 Sep 2026
39-10	Page 20	08 Sep 2026
39-10	Page 21	08 Sep 2026
39-10	Page 22	08 Sep 2026
39-10	Page 23	08 Sep 2026
39-10	Page 24	08 Sep 2026
39-10	Page 25	08 Sep 2026
39-10	Page 26	08 Sep 2026
39-10	Page 27	08 Sep 2026
39-10	Page 28	08 Sep 2026
39-10	Page 29	08 Sep 2026
39-10	Page 30	08 Sep 2026
39-10	Page 31	08 Sep 2026
39-10	Page 32	08 Sep 2026

39-10 ..... Page 33 ..... 08 Sep 2026
39-10 ..... Page 34 ..... 08 Sep 2026
39-10 ..... Page 35 ..... 08 Sep 2026
39-10 ..... Page 36 ..... 08 Sep 2026

39-10 ..... Page 1 ..... 08 Sep 2026
39-10 ..... Page 2 ..... 08 Sep 2026
39-10 ..... Page 3 ..... 08 Sep 2026
39-10 ..... Page 4 ..... 08 Sep 2026
39-10 ..... Page 5 ..... 08 Sep 2026
39-10 ..... Page 6 ..... 08 Sep 2026
39-10 ..... Page 7 ..... 08 Sep 2026
39-10 ..... Page 8 ..... 08 Sep 2026
39-10 ..... Page 9 ..... 08 Sep 2026
39-10 ..... Page 10 ..... 08 Sep 2026
39-10 ..... Page 11 ..... 08 Sep 2026
39-10 ..... Page 12 ..... 08 Sep 2026
39-10 ..... Page 12 ..... 08 Sep 2026
39-10 ..... Page 14 ..... 08 Sep 2026
39-10 ..... Page 15 ..... 08 Sep 2026
39-10 ..... Page 16 ..... 08 Sep 2026
39-10 ..... Page 17 ..... 08 Sep 2026
39-10 ..... Page 18 ..... 08 Sep 2026
39-10 ..... Page 19 ..... 08 Sep 2026
39-10 ..... Page 20 ..... 08 Sep 2026
39-10 ..... Page 21 ..... 08 Sep 2026
39-10 ..... Page 22 ..... 08 Sep 2026
39-10 ..... Page 23 ..... 08 Sep 2026
39-10 ..... Page 24 ..... 08 Sep 2026
39-10 ..... Page 25 ..... 08 Sep 2026
39-10 ..... Page 26 ..... 08 Sep 2026

39-30 ..... Page 1 ..... 08 Sep 2026
39-30 ..... Page 2 ..... 08 Sep 2026
39-30 ..... Page 3 ..... 02 Jan 2020
39-30 ..... Page 4 ..... 02 Jan 2020

39-80 ..... Page 1 ..... 10 Jul 2025
39-80 ..... Page 2 ..... 02 Jan 2020
39-80 ..... Page 3 ..... 02 Jan 2020
39-80 ..... Page 4 ..... 02 Jan 2020
39-80 ..... Page 5 ..... 02 Jan 2020
39-80 ..... Page 6 ..... 02 Jan 2020
39-80 ..... Page 7 ..... 02 Jan 2020
39-80 ..... Page 8 ..... 02 Jan 2020
39-80 ..... Page 9 ..... 02 Jan 2020

39-80 ..... Page 10 ..... 02 Jan 2020
39-80 ..... Page 11 ..... 02 Jan 2020
39-80 ..... Page 12 ..... 02 Jan 2020
39-80 ..... Page 13 ..... 02 Jan 2020
39-80 ..... Page 14 ..... 02 Jan 2020

This Page Intentionally Left Blank

Table of Contents

List of Effective Pages ..... 39-LOEP / Page 1
Table of Contents ..... 39-TOC / Page1

Paragraph **Page Number**

Electronic Panels and Multipurpose Components
1. General ..... 39-00 / Page 1

Software Loading Procedures Classic/GX
1. Garmin Software Loading (SN: K003 – K085, excluding K014) ..... 39-10 / Page 1
2. Standby Instrument Software Loading Procedure (L3 Harris ESI-500 Only) ..... 39-10 / Page 34

Software Loading Procedures AX
1. Garmin Software Loading (SN: K014 and K086 and On) ..... 39-11 / Page 1

Electrical and Electronic Junction Boxes
1. Description ..... 39-30 / Page 1
2. Maintenance Practices ..... 39-30 / Page 1
   A. Relay Box ..... 39-30 / Page 1

Electrical Harness
1. Description ..... 39-80 / Page 1
2. Maintenance Practices ..... 39-80 / Page 1
   A. Instrument Panel Harnesses ..... 39-80 / Page 1
   B. Yoke Harnesses ..... 39-80 / Page 11

This Page Intentionally Left Blank

ELECTRICAL PANELS AND MULTIPURPOSE COMPONENTS

1. General

This chapter gives information and procedures related to the relay box and the instrument panel electrical harnesses.

The relay box is mounted under the floor of the passenger compartment, just aft of the left mid passenger seat. It coordinates electrical power input to systems such as the auto pilot.

Three electrical wiring harnesses are used to connect the avionics, navigation, and communication equipment in the instrument panel, yokes, and antennas to the airplane electrical system.

K003-K085 (except K014), refer to the current revision of the E1000 Wiring Manual, P/N SK05000002.

K014, K086 and on, refer to the current revision of the E1000 Wiring Manual, P/N SK05003002.

This Page Intentionally Left Blank

SOFTWARE LOADING PROCEDURES

1. Garmin Software Loading (SN: K003 – K085, excluding K014)

CAUTION: Software loading procedures should only be performed with guidance from Epic Aircraft. The correct loader cards will be provided as needed. Contact Epic Aircraft Customer Support before proceeding:

Epic Aircraft, LLC
22590 Nelson Road
Bend, OR 97701
541-237-7272
https://epicaircraft.com/customer-support/
customersupport@epicaircraft.com

Note: When replacing a Garmin LRU, refer to section 6.3 of the latest revision of the G1000 NXi Line Maintenance Manual for the Epic E1000 for software loading procedures. Refer the list in chapter 34, page 1 for the applicable manual.

Note: Sections A through G must be performed together.

Table 39-10.1: Loader Card Options

Autopilot Options			
Autopilot Option	E1000	E1000 GX	E1000 w/ SB-0017
S-Tec 2100	X		
Garmin GFC 700		X	X
Garmin Options			
Option	E1000	E1000 GX	E1000 w/ SB-0017
FIKI		X	X
GDL 69A	X	X	X
GMU 44	X		X[1]
GMU 44B		X	X[2]
GTX 33D	X		X[1]
GTX 3x5		X	X[2]
GSR 56 (Optional)		X[3]	X[3]
GWX		X[6]	X[6]
Calibration Options			
Option	E1000	E1000 GX	E1000 w/ SB-0017
DAT Calibration Init	X	X	X
Fuel Cal – Delete	X[4]	X[4]	X[4]
Stall Heat Gnd Threshold	X[5]	X[5]	X[5]

Note 1: This option is only valid if FK34500000 was not incorporated with the E1000 GX retrofit.
Note 2: This option is only valid if FK34500000 was incorporated with the E1000 GX retrofit.
Note 3: This option is only valid if FK23300000 was incorporated.
Note 4: This option is only applicable if the Fuel Cal needs factory rest.
Note 5: This option is only applicable when performing Appendix A Section 2.11.5.
Note 6: This option is only applicable if the Weather Radar is installed.

Note: All Garmin LRU circuit breakers must be in when performing the software loading procedure.

A. Display Software Loading

Note: GDU to GDU software loading eliminates the need to move loader cards to each GDU during software loading. All loading procedures are done via PFD1. This procedure ensures all GDU's are at the same software level.

(1) GDU to GDU Software Loading
  (a) Connect external power to the airplane (refer to Chapter 24-40).
  (b) Remove any SD cards from the top and bottom slots of the MFD.

(c) Set the BATT 1 and BATT 2 switches to ON.

(d) Open the PFD1 circuit breaker.

(e) Insert the software loader card into the top card slot of the PFD1.

(f) While pressing the ENT key on PFD 1, close the PFD1 circuit breaker.

(g) Release the ENT key when “INITIALIZNG SYSTEM” is displayed in the upper left-hand corner of PFD1:

(h) Press the YES softkey at the bottom of PFD1. “UPDATING SYSTEM FILES, PLEASE WAIT” message is displayed.

Note: The system will indicate a successful update.

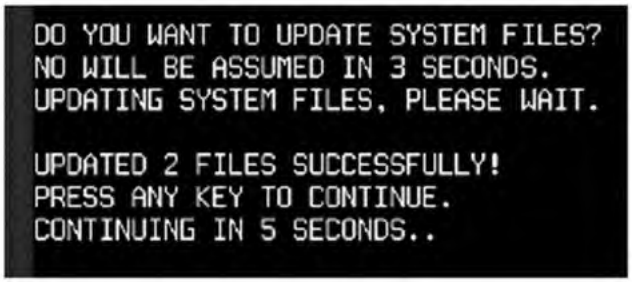

(i) Press any key to continue. The message “NEW SOFTWARE HAS BEEN LOADED. RESTARTING UNIT” in amber is displayed.

(j) The message “INITIALIZING SYSTEM CREW PROFILE DATA CLEARED” is displayed. The SYSTEM UPLOAD page is displayed.

B. Baseline Software Loading and Configuration

Note: Baseline software and configuration is loaded to the system after display software has been loaded.

Note: Steps B, C, D, and E must be performed together, and in that order. If step B needs to be repeated, steps C, D, and E must be performed again as well.

(1) Put the aircraft in Configuration mode:
   (a) Pull the PFD 1, PFD 2 and MFD circuit breakers.
   (b) Set the BATT 1 and BATT 2 switches to ON.
   (c) Press ENTER on the pilot's PFD while resetting the PFD 1 circuit breaker.
   (d) Press ENTER on the co-pilot's PFD while resetting the PFD 2 circuit breaker.
   (e) Press ENTER on the MFD while resetting the MFD circuit breaker.
   (f) INITIALIZING SYSTEM message should be displayed on all three displays.
(2) Go to the SYSTEM UPLOAD Page.
(3) Press the FMS knob on PFD1. "E1000 Baseline" is highlighted in a small window.
(4) Rotate the small FMS knob to highlight "E1000 Baseline" in the Small window.



(5) Press ENT to confirm the selection of E1000 Baseline.
(6) Epic E1000 is highlighted in the ITEM window.
(7) Rotate the small FMS knob to highlight Epic E1000.

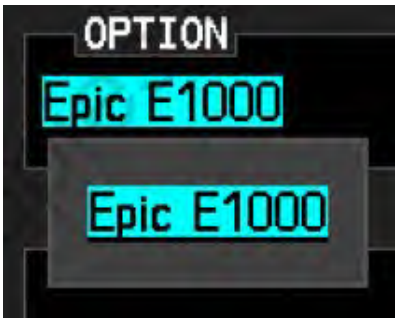

(8) Press ENT to confirm the selection of Epic E1000.

Note: The PRODUCT window is filled with all of the Software and Config items that can be loaded.



(9) Select the CHK ALL softkey.

(10) Press the Load Softkey, the baseline software and configuration begin to load.

(11) Acknowledge the load being complete by touching the ENT button on PFD1.

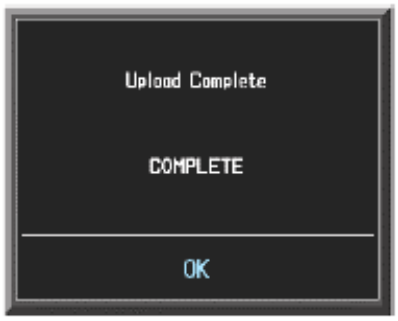

(12) View the SUMMARY field and ensure that all items are ‘complete’. Verify that PASS appears in green at the check boxes.

(13) Press the “UPDT CFG” softkey then select OK to update the configuration module.

C. Loading Autopilot Option Software and Configuration

CAUTION: Garmin GFC 700 and S-Tec 2100 options are available. Make sure to load the correct software for the autopilot installed in the aircraft.

Note: Load software and configuration for the autopilot that is installed in the aircraft after loading the baseline software.

(1) Make sure the system is in Configuration Mode.
(2) Go to the SYSTEM UPLOAD Page.
(3) Press the FMS knob on PFD 1. “E1000 Baseline” is highlighted in the GROUP window.
(4) Turn the large FMS knob on PFD1. “E1000 Baseline” is highlighted in a small window.



(5) Turn the small FMS knob. “Autopilot Options” is highlighted.



(6) Press ENT. The first option is displayed in the ITEM window. Turn the small FMS knob. A small window is displayed showing the possible options.



(7) Highlight the desired option and press the ENT key. The PRODUCT window fills with software and configuration.

(8) Select the CHK ALL softkey.

(9) Press “Load” at the bottom of PFD1. All software and configuration for the option starts loading.

(10) Acknowledge the load being complete by pressing the ENT key.



(11) View the SUMMARY field and ensure that all items are ‘complete’. Verify that PASS appears in green at the check boxes.

(12) Press the “UPDT CFG” softkey then select OK to update the configuration module.

D. Optional Equipment Software Loading and Configuration

Note: Load software and configuration for each item of optional equipment that is installed in the aircraft after loading the Autopilot Options Software and Configuration.

Note: Refer to Table 39-10.1 for correct options for the aircraft configuration.

(1) Make sure the system is in Configuration Mode.
(2) Go to the SYSTEM UPLOAD Page.
(3) Press the FMS knob on PFD 1. “E1000 Baseline” is highlighted in the GROUP window.
(4) Turn the large FMS knob on PFD1. “E1000 Baseline” is highlighted in a small window.



(5) Turn the small FMS knob. “Garmin Options” is highlighted.

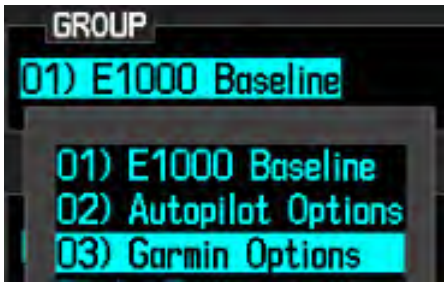

(6) Press ENT. The first option is displayed in the ITEM window. Turn the small FMS knob. A small window is displayed showing the possible options.



(7) Highlight the desired option and press the ENT key. The PRODUCT window fills with software and configuration.

(8) Select the CHK ALL softkey.

(9) Press “Load” at the bottom of PFD1. All software and configuration for the option starts loading.

(10) Acknowledge the load being complete by pressing the ENT key.



(11) View the SUMMARY field and ensure that all items are ‘complete’. Verify that PASS appears in green at the check boxes.

(12) Press the “UPDT CFG” softkey then select OK to update the configuration module.

E. Loading Calibration Files and Configuration

Note: This procedure shall only be performed when recalibration is required.

Note: Load Calibration Files and Configuration for each item after loading Optional Equipment Software and Configuration.

(1) Make sure the system is in configuration mode.
(2) Go to the SYSTEM UPLOAD Page.
(3) Press the FMS knob on PFD 1. “E1000 Baseline” is highlighted in the GROUP window.
(4) Turn the large FMS knob on PFD1. “E1000 Baseline” is highlighted in a small window.



(5) Turn the small FMS knob. “Calibration” is highlighted.

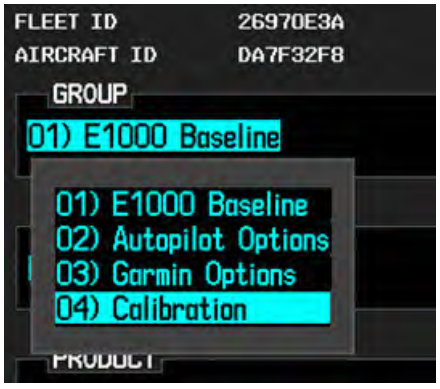

(6) Press ENT. The first option is displayed in the ITEM window. Turn the small FMS knob. A small window is displayed showing the possible options.

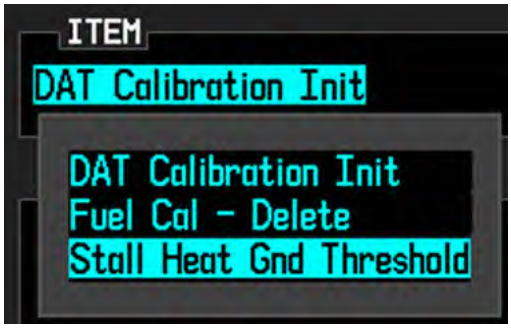

(7) Highlight the desired option and press the ENT key. The PRODUCT window fills with calibration configuration options.

Note: If loading DAT Calibration Init, it is not permitted to load all options in the PRODUCT column. It is acceptable to only select the one option needed.

Note: Loading DAT Calibration will affect the Stall Heat Fail CAS performance and should only be done with direction from Epic.

(8) If all options will be loaded, press the CHK All Softkey. If Individual options are to be loaded, press the CLR All, then highlight the individual options and press ENT to select.

(9) Press "Load" at the bottom of PFD1. All software and configuration for the option starts loading.

(10) Acknowledge the load being complete by pressing the ENT key.

Note: If loading the DAT Calibration Init, calibration procedures in step (H) must be performed. If loading Fuel Cal-Delete, fuel calibration must be performed, refer to Chapter 28-40.2.(5).



F. Enablement Card Options

Note: Once an enablement card is utilized the card becomes locked to the aircraft system ID. The enablement cards must be retained for that aircraft if there is a need to enable the feature again.

Table 39-10.2: Enablement Cards

E1000 "Classic" Standard Enablement Cards	
Part Number	Description
010-00330-55	SD Card, GDU 1xxx SVS Unlock, 2 PFDs
010-00474-50	SD Card, GIFD, Supp DBs, IFR/VFR Charts, Black

E1000 GX Standard Enablement Cards	
Part Number	Description
010-00330-55	SD Card, GDU 1xxx SVS Unlock, 2 PFDs
010-00474-50	SD Card, GIFD, Supp DBs, IFR/VFR Charts, Black
010-00330-5A	SD Card, ESP Unlock
010-00330-5E	SD Card, Surface Watch Unlock

Optional Enablement Cards	
Part Number	Description
010-00330-50	SD Card, GDU 10xx Chart Unlock, Heavy AC
010-00330-51	SD Card, GDU 10xx TAWS Unlock
010-00330-A1	SD Card, GDU 1xxx TAS to TCAS I Enablement
010-11093-00	Integrated Avionics – NavData Starter Kit for Jepp Databases
010-00330-JA	SD Card, GX000, GWX Processor Automode LH, GCS TD Enablement
	SD Card, GX000, GWX Ground Clutter Enablement
	SD Card, GX000, GWX Turbulence Detection Enablement

(1) Insert the enablement card for the desired feature in the top slot of PFD1.
(2) Power up the system in configuration mode. PFD1 displays the SYSTEM UPLOAD page.
(3) Press the small FMS knob. “SD CARD” is highlighted in the CARD window.
(4) Turn the small FMS knob. “SD CARD” is highlighted in the small window.
(5) Press ENT. Turn the small FMS knob. The option to be enabled is highlighted in the GROUP window.
(6) Press the ENT key. The PRODUCT window populates with software and configuration.
(7) Select the “Load” softkey.

Note: Do not cancel a load in progress. If a failure occurs, wait until the fail message appears before proceeding.

(8) Monitor the status of the load. When the load is finished, press ENT to acknowledge.
(9) View the SUMMARY field to ensure that all items are ‘complete’. Verify the PASS appears in green at the check boxes.
(10) Press the “UPDT CFG” softkey then select OK to update the configuration module.

G. Aircraft Registration Number Entry

(1) Insert the software loader card in the top slot of PFD1.

(2) Put the aircraft in Configuration mode:

(a) Pull the PFD 1, PFD 2 and MFD circuit breakers.

(b) Set the BATT 1 and BATT 2 switches to ON.

(c) Press ENTER on the pilot’s PFD while resetting the PFD 1 circuit breaker.

(d) Press ENTER on the co-pilot’s PFD while resetting the PFD 2 circuit breaker.

(e) Press ENTER on the MFD while resetting the MFD circuit breaker.

(f) INITIALIZING SYSTEM message should be displayed on all three displays.

(3) Select NO to acknowledge the UPDATE prompt.

(4) Select the AIRCRAFT CONFIGURATION page on PFD 1

(5) Press the small FMS knob on PFD1 and activate the cursor on the "AIRCRAFT REGISTRATION" field. Enter the aircraft's tail number.

(6) Select the "ICAO ADDRESS" and enter the aircrafts 24-bit ICAO address.

(7) If applicable select the "ICAO REGION" field and select the ICAO region. Otherwise, leave at "NONE".

(8) If applicable, select the "DOMAIN IDENTIFIER" field and enter the number. Otherwise, leave blank.

(9) Select the "VFR CODE" field and enter the desired code that will become active when the VFR key on the PFD is pressed.

(10) Press the "SET GTS" softkey and acknowledge the "Save Parameters" prompt by pressing ENT.

(11) Acknowledge the GTS Config load completion prompt by pressing ENT.

(12) Press the "SET GTX 1" softkey and acknowledge the "Save Parameters" prompt by pressing ENT.

(13) Press the "SET GTX 2" softkey and acknowledge the "Save Parameters" prompt by pressing ENT.

(14) Acknowledge the GTX Config load completion prompt by pressing ENT.

(15) Deactivate the cursor.

H. DAT Calibration

Note: Calibrations can be performed individually as needed.

(1) Put the aircraft in configuration mode as follows:
  (a) Connect external electrical power to the airplane (refer to Chapter 24-40).
  (b) Pull the PFD 1, PFD 2 and MFD circuit breakers.
  (c) Set the BATT 1 and BATT 2 switches to ON.
  (d) Press ENTER on the pilot's PFD while resetting the PFD 1 circuit breaker.
  (e) Press ENTER on the co-pilot's PFD while resetting the PFD 2 circuit breaker.
  (f) Press ENTER on the MFD while resetting the MFD circuit breaker.
  (g) INITIALIZING SYSTEM message should be displayed on all three displays.
(2) Select the DAT Calibration Page, under the CAL Page Group.
(3) Trim Calibration:

Note: For initial software loads, a custom Trim Indication Calibration must be completed.

  (a) Aileron Trim
    (i) Press the small FMS knob. RAW PNT 0 of the TRIM_ROLL Calibration Table is highlighted.
    (ii) Run the Aileron trim to the left (Trailing edge DOWN) until it reaches its max extension.
    (iii) Press the Cal Softkey and acknowledge the "Confirm the Calibration Point" by pressing ENT.
    (iv) Turn the large FMS knob to select RAW PNT 1 in the Calibration Table.
    (v) Run the Aileron trim until it is at the neutral position:
      (1) For aircraft without GWX installed, run the trim tab until it is in-line with the aileron trailing edge.
      (2) For aircraft with GWX installed, run the trim until the trailing edge of the trim tab measures 5° +/- 0.5° below the trailing edge of the aileron.
    (vi) Press the Cal Softkey and acknowledge the "Confirm the Calibration Point" by pressing ENT.
    (vii) Turn the large FMS knob to select RAW PNT 2 in the Calibration Table.
    (viii) Run the Aileron trim to the Right (Trailing edge UP) until it reaches its max extension.
    (ix) Press the Cal Softkey and acknowledge the "Confirm the Calibration Point" by pressing ENT.
  (b) Rudder Trim
    (i) Turn the large FMS knob to select RAW PNT 0 in the TRIM_YAW Calibration Table.

(ii) Run the Rudder trim to the left (Trailing edge Right) until it reaches its max extension.

(iii) Press the Cal Softkey and acknowledge the “Confirm the Calibration Point” by pressing ENT.

(iv) Turn the large FMS knob to select RAW PNT 1 in the Calibration Table.

(v) Run the Rudder trim until it is at the neutral position (in line with the Rudder trailing edge).

(vi) Press the Cal Softkey and acknowledge the “Confirm the Calibration Point” by pressing ENT.

(vii) Turn the large FMS knob to select RAW PNT 2 in the Calibration Table.

(viii) Run the Rudder trim to the Right (Trailing edge LEFT) until it reaches its max extension.

(ix) Press the Cal Softkey and acknowledge the “Confirm the Calibration Point” by pressing ENT.

(c) Elevator Trim

(i) Turn the large FMS knob to select RAW PNT 0 in the TRIM_PITCH_AVG Calibration Table.

(ii) Run the Elevator trim down (Trailing edge UP) until it reaches its max extension.

(iii) Press the Cal Softkey and acknowledge the “Confirm the Calibration Point” by pressing ENT.

(iv) Turn the large FMS knob to select RAW PNT 1 in the Calibration Table.

(v) Run the Elevator trim until it is at the neutral position (in line with the Elevators trailing edge).

(vi) Press the Cal Softkey and acknowledge the “Confirm the Calibration Point” by pressing ENT.

(vii) Turn the large FMS knob to select RAW PNT 2 in the Calibration Table.

(viii) Run the Elevator trim up (Trailing edge DOWN) until it reaches its max extension.

(ix) Press the Cal Softkey and acknowledge the “Confirm the Calibration Point” by pressing ENT.

(4) Amp Indication Calibration

(a) Generator Amp Input Calibration:

(i) Press the TBL 4-7 Softkey to switch DAT Calibration Pages.

(ii) Press the small FMS knob. RAW PNT 0 of the GEN_GAUGE_21 Calibration Table is highlighted.

(iii) Turn the large FMS knob to select RAW PNT 0 in the BAT_1_BUS_AMP Calibration Table

(iv) Press the Cal Softkey and acknowledge the “Confirm the calibration Point” by pressing ENT.

(b) Alternator Amp Input Calibration:

(i) Press the TBL 8-11 Softkey to switch DAT Calibration Pages.

(ii) Press the small FMS knob. RAW PNT 0 of the BAT_2_BUS_AMP Calibration Table is highlighted.

(iii) Press the Cal Softkey and acknowledge the “Confirm the calibration Point” by pressing ENT.

(5) Pressure Sensor Input Calibration

Note: Perform each of the following Pressure Sensor Input Calibrations with the pressure sensor unpressurized.

(a) Oil Pressure Input Calibration

(i) Press the TBL 8-11 Softkey to switch DAT Calibration Pages.

(ii) Press the small FMS knob. RAW PNT 0 of the BAT_2_BUS_AMP Calibration Table is highlighted.

(iii) Turn the large FMS knob to select RAW PNT 0 in the ENG_1_OIL_PRES Calibration Table

(iv) Press the Cal Softkey and acknowledge the “Confirm the calibration Point” by pressing ENT.

(b) Nitrogen Pressure Input Calibration

(i) Press the TBL 8-11 Softkey to switch DAT Calibration Pages.

(ii) Press the small FMS knob. RAW PNT 0 of the BAT_2_BUS_AMP Calibration Table is highlighted.

(iii) Turn the large FMS knob to select RAW PNT 0 in the AUX_HYD_-PRESS_LOW Calibration Table

(iv) Press the Cal Softkey and acknowledge the “Confirm the calibration Point” by pressing ENT.

(c) Fuel Pressure Input Calibration

(i) Press the TBL 8-11 Softkey to switch DAT Calibration Pages.

(ii) Press the small FMS knob. RAW PNT 0 of the BAT_2_BUS_AMP Calibration Table is highlighted.

(iii) Turn the large FMS knob to select RAW PNT 0 in the ENG_1_FUEL_-PRESS Calibration Table

(iv) Press the Cal Softkey and acknowledge the “Confirm the calibration Point” by pressing ENT.

(6) Updating the Configuration Module

(a) After completing all software loading procedures update the configuration module by doing the following:

(i) Select the System Upload Page on PFD1.

(ii) Press the UPDT CFG softkey at the bottom of the display.

(iii) Update configuration Module?' is displayed

(iv) Press ENT to acknowledge the prompt.

(v) The system updates the configuration module located in PFD 1 connector.

(7) Confirm Configuration

(a) After completing the update of the configuration module, Confirm the Configuration by doing the following:

(i) Select the Configuration Manager page on PFD1.

(ii) Press the CNFM CFG softkey at the bottom of the display.

(iii) The prompt Confirm configuration as expected configuration appears with OK selected. Press ENT to confirm the configuration.

I. Stall Heat Fail Monitor Calibration (SN: K003 - K055 without SB-0035)

Note: For initial software loads, a custom Stall Heat Fail Annunciation Calibration must be completed. Complete the following steps to Calibrate.

(1) Put the aircraft in Configuration mode:
   (a) Pull the PFD 1, PFD 2 and MFD circuit breakers.
   (b) Set the BATT 1 and BATT 2 switches to ON.
   (c) Press ENTER on the pilot's PFD while resetting the PFD 1 circuit breaker.
   (d) Press ENTER on the co-pilot's PFD while resetting the PFD 2 circuit breaker.
   (e) Press ENTER on the MFD while resetting the MFD circuit breaker.
   (f) INITIALIZING SYSTEM message should be displayed on all three displays.

(2) Perform the Stall Heat Monitor Input Calibration
   (a) Press the small FMS knob. RAW PNT 0 of the TRIM_ROLL Calibration Table is highlighted.
   (b) Turn the large FMS knob to select RAW PNT 0 in the GEN_GAUGE_20 Calibration Table.
   (c) Press the Cal Softkey and acknowledge the "Confirm the calibration Point" by pressing ENT.
   (d) Press the TBL 4-7 Softkey to switch DAT Calibration Pages.
   (e) Press the small FMS knob. RAW PNT 0 of the GEN_GAUGE_21 is highlighted.
   (f) Press the Cal Softkey and acknowledge the "Confirm the calibration Point" by pressing ENT.

(3) Perform the Left Stall Heat Fail Monitor Calibration:
   (a) Make sure the airplane is in a weight-on-wheels configuration.
   (b) Press the TBL 4-7 Softkey to switch DAT Calibration Pages.
   (c) Press the small FMS knob. RAW PNT 0 of the TRIM_ROLL Calibration Table is highlighted.
   (d) Make note of the existing RAW PNT 1 and RAW PNT 2 values.

CAUTION: To prevent damage, verify RAW VAL is greater than 12. If it is not, turn the PITOT / STALL HEAT switch off immediately. Ensure ground heat is on for no longer than 5 minutes.

   (e) Turn the large FMS knob to select RAW PNT 2 in the AOA_HT_MON_L Calibration Table.
   (f) Press the PITOT / STALL HEAT Switch to the ON position. Leave the heater on for 3-5 minutes. Press the Cal Softkey and acknowledge the "Confirm the Calibration Point" by pressing ENT. Press the PITOT / STALL HEAT Switch to the OFF position.
   (g) Let the Stall Heater cool down completely.

Note: Failure to allow the heaters to cool down could result in an inaccurate calibration. Cooling time can be reduced by using shop air to blow over the SPS lift transducer.

(h) Put the plane into air mode by compressing both of the Weight on Wheels Switches.

CAUTION: To prevent damage, ensure air heat is on for no longer than 5 seconds.

(i) Turn the large FMS knob to select RAW PNT 1 in the AOA_HT_MON_L Calibration Table.

(j) Press the PITOT / STALL HEAT Switch to the ON position. Leave the heater on for 3-4 sec and then press the Cal Softkey and acknowledge the "Confirm the Calibration Point" by pressing ENT. Press the PITOT / STALL HEAT Switch to the OFF position.

(k) Pull the Left Stall Heat PWR circuit breaker.

(l) Verify RAW PNT 1 is set to 3.6 +/-0.75.

(m) Verify RAW PNT 2 is set to 15.0 +/- 1.5.

(n) Update the configuration module:

(i) Select the System Upload Page on PFD1.

(ii) Press the UPDT CFG softkey at the bottom of the display.

(iii) Update configuration Module?' is displayed

(iv) Press ENT to acknowledge the prompt.

(v) The system updates the configuration module located in PFD 1 connector.

(o) Confirm the configuration:

(i) Select the Configuration Manager page on PFD1.

(ii) Press the CNFM CFG softkey at the bottom of the display.

(iii) The prompt Confirm configuration as expected configuration appears with OK selected. Press ENT to confirm the configuration.

(4) Perform the Right Stall Heat Fail Calibration:

Note: This calibration may be performed on the in-air (RAW PNT 1) or on-ground (RAW PNT 2) configurations together or individually as needed.

(a) Make sure the airplane is in a weight-on-wheels configuration.

(b) Set the BATT 1 and BATT 2 switches to ON.

(c) Make sure the PUSHER, IGNITER, SPS CMP 1A, SPS CMP 1B, SPS CMP 2A, SPS CMP 2B, L STALL HEAT, L PITOT HEAT, and R PITOT HEAT circuit breakers pulled. Ensure the R STALL HEAT circuit breaker is in.

(d) Put the aircraft in Configuration mode:

(i) Pull the PFD 1, PFD 2 and MFD circuit breakers.

(ii) Set the BATT 1 and BATT 2 switches to ON.

(iii) Press ENTER on the pilot's PFD while resetting the PFD 1 circuit breaker.

(iv) Press ENTER on the co-pilot's PFD while resetting the PFD 2 circuit breaker.

(v) Press ENTER on the MFD while resetting the MFD circuit breaker.

(vi) INITIALIZING SYSTEM message should be displayed on all three displays.

(e) Select the DAT Calibration Page, under the CAL Page Group.

(f) Press the small FMS knob. RAW PNT 0 of the TRIM_ROLL Calibration Table is highlighted.

CAUTION: To prevent damage, verify RAW VAL is greater than 12. If it is not, turn the PITOT / STALL HEAT switch off immediately. Ensure ground heat is on for no longer than 5 minutes.

(g) Turn the large FMS knob to select RAW PNT 2 in the AOA_HT_MON_R Calibration Table.

(h) Press the PITOT / STALL HEAT Switch to the ON position. Leave the heater on for 3-5 minutes. Press the Cal Softkey and acknowledge the "Confirm the Calibration Point" by pressing ENT. Press the PITOT / STALL HEAT Switch to the OFF position.

(i) Let the Stall Heater cool down completely.

Note: Failure to allow the heaters to cool down could result in an inaccurate calibration. Cooling time can be reduced by using shop air to blow over the SPS lift transducer.

(j) Put the plane into air mode by compressing both of the Weight on Wheels Switches.

CAUTION: To prevent damage, ensure air heat is on for no longer than 5 seconds.

(k) Turn the large FMS knob to select RAW PNT 1 in the AOA_HT_MON_R Calibration Table.

(l) Press the PITOT / STALL HEAT Switch to the ON position. Leave the heater on for 3-4 sec and then press the Cal Softkey and acknowledge the "Confirm the Calibration Point" by pressing ENT. Press the PITOT / STALL HEAT Switch to the OFF position.

(m) Pull the Right Stall Heat PWR circuit breaker.

(n) Verify RAW PNT 1 is set to 3.6 +/-0.5.

(o) Verify RAW PNT 2 is set to 15.0 +/- 1.0.

(p) Update the configuration module:

(i) Select the System Upload Page on PFD1.

(ii) Press the UPDT CFG softkey at the bottom of the display.

(iii) Update configuration Module?' is displayed

(iv) Press ENT to acknowledge the prompt.

(v) The system updates the configuration module located in PFD 1 connector.

(q) Confirm the configuration:

(i) Select the Configuration Manager page on PFD1.

(ii) Press the CNFM CFG softkey at the bottom of the display.

(iii) The prompt Confirm configuration as expected configuration appears with OK selected. Press ENT to confirm the configuration.

J. Stall Heat Fail Monitor Calibration (SN: K056 - K085, and K003 - K055 with SB-0035)

For initial software loads, a custom Stall Heat Fail Annunciation Calibration must be completed. Complete the following steps to Calibrate.

(1) Put the aircraft in Configuration mode:

(a) Pull the PFD 1, PFD 2 and MFD circuit breakers.

(b) Set the BATT 1 and BATT 2 switches to ON.

(c) Press ENTER on the pilot's PFD while resetting the PFD 1 circuit breaker.

(d) Press ENTER on the co-pilot's PFD while resetting the PFD 2 circuit breaker.

(e) Press ENTER on the MFD while resetting the MFD circuit breaker.

(f) INITIALIZING SYSTEM message should be displayed on all three displays.

(2) Perform the Stall Heat Monitor Input Calibration

(a) Press the small FMS knob. RAW PNT 0 of the TRIM_ROLL Calibration Table is highlighted.

Note: All calibration tables begin with RAW PNT 0.

(b) Turn the large FMS knob to select RAW PNT 0 in the GEN_GAUGE_20 Calibration Table.

(c) Press the Cal Softkey and acknowledge the "Confirm the calibration Point" by pressing ENT.

(d) Press the TBL 4-7 Softkey to switch DAT Calibration Pages.

(e) Press the small FMS knob. RAW PNT 0 of the GEN_GAUGE_21 is highlighted.

(f) Press the Cal Softkey and acknowledge the "Confirm the calibration Point" by pressing ENT.

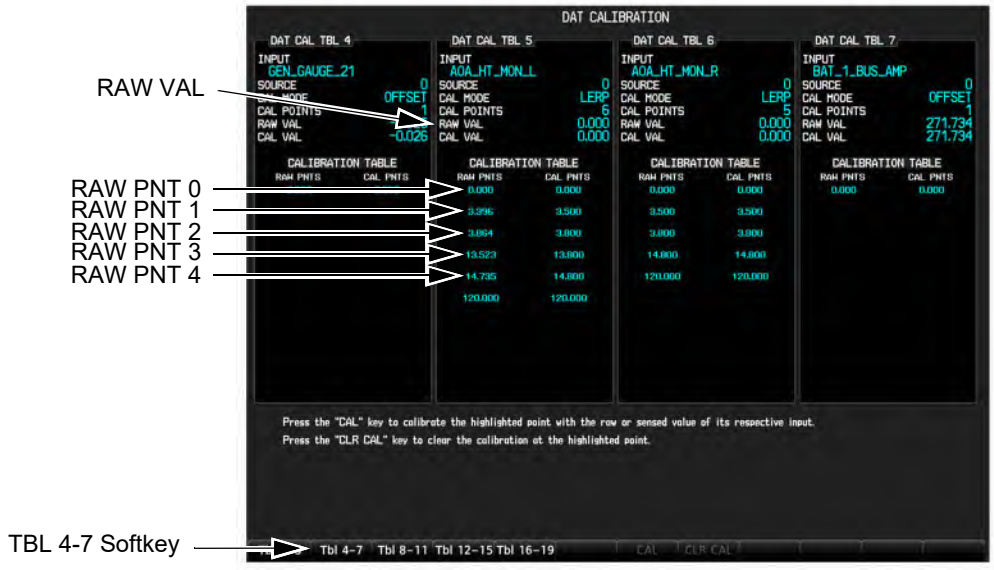

(3) Perform the Left Stall Heat Fail Monitor Calibration:

Note: It is normal to see the L PITOT HT FAIL and R PITOT HT FAIL cautions illuminate during this procedure.

(a) Make sure the airplane is in a weight-on-wheels configuration.

(b) Open the PUSHER, IGNITER, SPS CMP 1A, SPS CMP 1B, SPS CMP 2A, SPS CMP 2B, XPDR 1, XPDR 2, L PITOT HEAT, and R PITOT HEAT circuit breakers.

(c) Make sure the L STALL HEAT, R STALL HEAT, L PITOT HT CTRL and R PITOT HT CTRL circuit breakers are closed.

(d) Manipulate OAT 1 and 2 to indicate greater than 10°C and within 3°C of each other.

(e) Manipulate NG to indicate greater than 4%.

(f) Press the TBL 4-7 Softkey to switch DAT Calibration Pages.

(g) Press the small FMS knob. RAW PNT 0 of the GEN_GAUGE_21 Calibration Table is highlighted.

CAUTION: To prevent damage, verify RAW VAL is greater than 12. If it is not, turn the PITOT / STALL HEAT switch off immediately. Ensure ground heat is on for no longer than 5 minutes.

Note: The supplemental heaters and pitot heaters should not heat up.

(h) Turn the large FMS knob to select RAW PNT 4 in the AOA_HT_MON_L Calibration Table.

(i) Set the PITOT / STALL HEAT Switch to ON. Leave the heater on for at least 4 minutes.

(j) Press the Cal Softkey and acknowledge the "Confirm the Calibration Point" by pressing ENT.

(k) Set the PITOT / STALL HEAT Switch to off.

(l) Let the Stall Heaters cool down completely.

Note: Failure to allow the heaters to cool down could result in an inaccurate calibration. Cooling time can be reduced by using shop air to blow over the SPS lift transducer.

(m) Manipulate OAT 1 and 2 to indicate less than 10°C and within 3°C of each other.

CAUTION: To prevent damage, verify RAW VAL is greater than 12. If it is not, turn the PITOT / STALL HEAT switch off immediately. Ensure ground heat is on for no longer than 5 minutes.

Note: The supplemental heaters and pitot heaters should heat up.

(n) Turn the large FMS knob to select RAW PNT 3 in the AOA_HT_MON_L Calibration Table.

(o) Set the PITOT / STALL HEAT Switch to ON. Leave the heater on for at least 4 minutes.

(p) Press the Cal Softkey and acknowledge the "Confirm the Calibration Point" by pressing ENT.

(q) Set the PITOT / STALL HEAT Switch to off.

(r) Let the Stall Heaters cool down completely.

Note: Failure to allow the heaters to cool down could result in an inaccurate calibration. Cooling time can be reduced by using shop air to blow over the SPS lift transducer.

(s) Put the airplane into air mode by actuating both of the Weight on Wheels Switches.

(t) Manipulate OAT 1 and 2 to indicate greater than 10°C and within 3°C of each other.

(u) Turn the large FMS knob to select RAW PNT 2 in the AOA_HT_MON_L Calibration Table.

CAUTION: To prevent damage, ensure air heat is on for no longer than 5 seconds.

Note: The supplemental heaters and pitot heaters should not heat up.

(v) Set the PITOT / STALL HEAT Switch to ON. Leave the heater on for 3-4 sec and then press the Cal Softkey and acknowledge the "Confirm the Calibration Point" by pressing ENT. Set the PITOT / STALL HEAT Switch to off.

(w) Let the Stall Heaters cool down completely.

Note: Failure to allow the heaters to cool down could result in an inaccurate calibration. Cooling time can be reduced by using shop air to blow over the SPS lift transducer.

(x) Manipulate OAT 1 and 2 to indicate less than 10°C and within 3°C of each other.

(y) Turn the large FMS knob to select RAW PNT 1 in the AOA_HT_MON_L Calibration Table.

CAUTION: To prevent damage, ensure air heat is on for no longer than 5 seconds.

Note: The supplemental heaters and pitot heaters should heat up.

(z) Set the PITOT / STALL HEAT Switch to ON. Leave the heater on for 3-4 sec and then press the Cal Softkey and acknowledge the "Confirm the Calibration Point" by pressing ENT. Set the PITOT / STALL HEAT Switch to off.

(aa) Let the Stall Heaters cool down completely.

(ab) Make sure the RAW PNT values are as follows:

(i) RAW PNT 1 is set to 3.5 +/-0.5 and is less than RAW PNT 2.

(ii) RAW PNT 2 is set to 3.8 +/-0.5.

(iii) RAW PNT 3 is set to 13.8 +/- 1.0 and is less than RAW PNT 4.

(iv) RAW PNT 4 is set to 14.8 +/- 1.0.

Note: If any value is outside of its range, the heaters and wiring must be checked for proper function.

(ac) Update the configuration module:

(i) Select the System Upload Page on PFD1.

(ii) Press the UPDT CFG softkey at the bottom of the display.

(iii) Update configuration Module? is displayed

(iv) Press ENT to acknowledge the prompt.

(v) The system updates the configuration module located in PFD 1 connector.

(ad) Confirm the configuration:

(i) Select the Configuration Manager page on PFD1.

(ii) Press the CNFM CFG softkey at the bottom of the display.

(iii) The prompt Confirm configuration as expected configuration appears with OK selected. Press ENT to confirm the configuration.

(ae) Set the BATT 1 and BATT 2 switches to off.

(af) Disconnect the ground power unit from the airplane (refer to Chapter 24-40).

(ag) Close the PUSHER, IGNITER, SPS CMP 1A, SPS CMP 1B, SPS CMP 2A, SPS CMP 2B, XPDR 1, XPDR 2, L PITOT HEAT, and R PITOT HEAT circuit breakers.

(4) Perform the Right Stall Heat Fail Monitor Calibration:

Note: It is normal to see the L PITOT HT FAIL and R PITOT HT FAIL cautions illuminate during this procedure.

(a) Make sure the airplane is in a weight-on-wheels configuration.

(b) Open the PUSHER, IGNITER, SPS CMP 1A, SPS CMP 1B, SPS CMP 2A, SPS CMP 2B, XPDR 1, XPDR 2, L PITOT HEAT, and R PITOT HEAT circuit breakers.

(c) Make sure the L STALL HEAT, R STALL HEAT, L PITOT HT CTRL and R PITOT HT CTRL circuit breakers are closed.

(d) Manipulate OAT 1 and 2 to indicate greater than 10°C and within 3°C of each other.

(e) Manipulate NG to indicate greater than 4%.

(f) Press the TBL 4-7 Softkey to switch DAT Calibration Pages.

(g) Press the small FMS knob. RAW PNT 0 of the GEN_GAUGE_21 Calibration Table is highlighted.

CAUTION: To prevent damage, verify RAW VAL is greater than 12. If it is not, turn the PITOT / STALL HEAT switch off immediately. Ensure ground heat is on for no longer than 5 minutes.

Note: The supplemental heaters and pitot heaters should not heat up.

(h) Turn the large FMS knob to select RAW PNT 3 in the AOA_HT_MON_R Calibration Table.

(i) Set the PITOT / STALL HEAT Switch to ON. Leave the heater on for at least 4 minutes.

(j) Press the Cal Softkey and acknowledge the "Confirm the Calibration Point" by pressing ENT.

(k) Set the PITOT / STALL HEAT Switch to off.

(l) Let the Stall Heaters cool down completely.

Note: Failure to allow the heaters to cool down could result in an inaccurate calibration. Cooling time can be reduced by using shop air to blow over the SPS lift transducer.

(m) Put the airplane into air mode by actuating both of the Weight on Wheels Switches.

(n) Manipulate OAT 1 and 2 to indicate greater than 10°C and within 3°C of each other.

(o) Turn the large FMS knob to select RAW PNT 2 in the AOA_HT_MON_R Calibration Table.

CAUTION: To prevent damage, ensure air heat is on for no longer than 5 seconds.

Note: The supplemental heaters and pitot heaters should not heat up.

(p) Set the PITOT / STALL HEAT Switch to ON. Leave the heater on for 3-4 sec and then press the Cal Softkey and acknowledge the "Confirm the Calibration Point" by pressing ENT. Set the PITOT / STALL HEAT Switch to off.

(q) Let the Stall Heaters cool down completely.

Note: Failure to allow the heaters to cool down could result in an inaccurate calibration. Cooling time can be reduced by using shop air to blow over the SPS lift transducer.

(r) Manipulate OAT 1 and 2 to indicate less than 10°C and within 3°C of each other.

(s) Turn the large FMS knob to select RAW PNT 1 in the AOA_HT_MON_R Calibration Table.

CAUTION: To prevent damage, ensure air heat is on for no longer than 5 seconds.

Note: The supplemental heaters and pitot heaters should heat up.

(t) Set the PITOT / STALL HEAT Switch to ON. Leave the heater on for 3-4 sec and then press the Cal Softkey and acknowledge the "Confirm the Calibration Point" by pressing ENT. Set the PITOT / STALL HEAT Switch to off.

(u) Let the Stall Heaters cool down completely.

(v) Make sure the RAW PNT values are as follows:

(i) RAW PNT 1 is set to 3.5 +/-0.5 and is less than RAW PNT 2.

(ii) RAW PNT 2 is set to 3.8 +/-0.5.

(iii) RAW PNT 4 is set to 14.8 +/- 1.0.

Note: If any value is outside of its range, the heaters and wiring must be checked for proper function.

(w) Update the configuration module:

(i) Select the System Upload Page on PFD1.

(ii) Press the UPDT CFG softkey at the bottom of the display.

(iii) Update configuration Module? is displayed

(iv) Press ENT to acknowledge the prompt.

(v) The system updates the configuration module located in PFD 1 connector.

(x) Confirm the configuration:

(i) Select the Configuration Manager page on PFD1.

(ii) Press the CNFM CFG softkey at the bottom of the display.

(iii) The prompt Confirm configuration as expected configuration appears with OK selected. Press ENT to confirm the configuration.

(y) Set the BATT 1 and BATT 2 switches to off.

(z) Disconnect the ground power unit from the airplane (refer to Chapter 24-40).

(aa) Close the PUSHER, IGNITER, SPS CMP 1A, SPS CMP 1B, SPS CMP 2A, SPS CMP 2B, XPDR 1, XPDR 2, L PITOT HEAT, and R PITOT HEAT circuit breakers.

K. Stall Heat Threshold Calibration

This section defines the method for incorporating an offset to the Stall Heat Monitor threshold.

Note: Contact Epic Aircraft for troubleshooting guidance and assistance before performing this procedure:

Epic Aircraft, LLC
22590 Nelson Road
Bend, OR 97701
503-318-8849
https://epicaircraft.com/customer-support/
customersupport@epicaircraft.com

(1) Prepare for threshold calibration as follows:

(a) Calculate the Offset to be applied.

(b) Set up a breakout box in line with the GEA.

(c) Power the aircraft on in Configuration Mode.

(d) Select the DAT Calibration Page, under the CAL Page Group.

(2) Left Stall Heat Offset

Note: When performing this calibration, the high side of the power supply (+ lead), will connect to the low pin of the current monitor in the GEA, and the low side of the power supply (-lead), will connect to the high pin of the current monitor in the GEA.

(a) Using a power supply set up the High side to connect to the breakout box pin that correlates to P702-49 and the low side to P702-48.

(b) Press the small FMS knob. RAW PNT 0 of the TRIM_ROLL Calibration Table is highlighted.

(c) Turn the large FMS knob to select RAW PNT 0 in the GEN_GAUGE_20 Calibration Table.



(d) Adjust the power being supplied by the power supply until the calculated offset is achieved.

(e) Press the CAL Softkey and acknowledge the “Confirm the calibration Point” by pressing ENT.

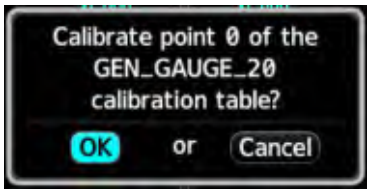

(3) Right Stall Heat Offset

Note: When performing this calibration, the high side of the power supply (+ lead), will connect to the low pin of the current monitor in the GEA, and the low side of the power supply (-lead), will connect to the high pin of the current monitor in the GEA.

(a) Using a power supply set up the High side to connect to the breakout box pin that correlates to P702-51 and the low side to P702-50.

(b) Press the small FMS knob. RAW PNT 0 of the TRIM_ROLL Calibration Table is highlighted.

(c) Press the TBL 4-7 Softkey to switch DAT Calibration Pages.

(d) Press the small FMS knob. RAW PNT 0 of the GEN_GAUGE_21 is highlighted.

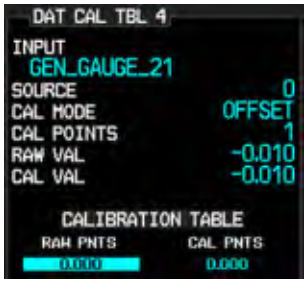

(e) Adjust the power being supplied by the power supply until the calculated offset is achieved.

(f) Press the Cal Softkey and acknowledge the “Confirm the calibration Point” by pressing ENT.

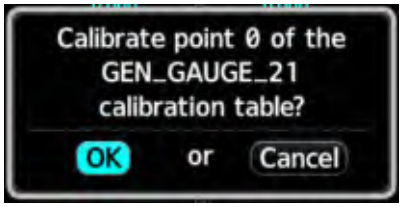

(4) Stall Heat Ground Mode Threshold Update

(a) Install the Loader Card.

(b) Begin this procedure with weight on wheels and the Left Pitot Power and Right Pitot Power circuit breakers pulled. Ensure the Right Stall Heat PWR, Left Stall Heat PWR, L Pitot CTRL and R Pitot CTRL circuit breaker is in.

(c) Verify NG is indicating less than 4%.

(d) Select the DAT Calibration Page, under the CAL Page Group.

(e) Press the TBL 4-7 Softkey to switch DAT Calibration Pages.

(f) Press the PITOT / STALL HEAT Switch to the ON position. Document the AOA_HT_MON_L CAL VAL after 30 seconds.

(g) Navigate to the SYSTEM UPLOAD Page.

(h) Press the FMS knob on PFD1. “E1000 Baseline” is highlighted in a small window.

(i) Rotate the small FMS knob to highlight “CALIBRATION” in the small window.

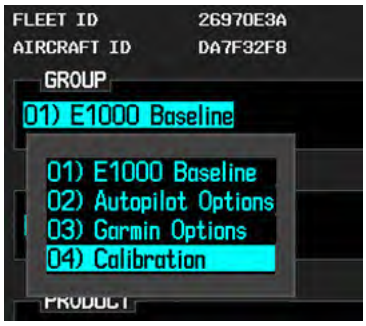

(j) Press ENT to confirm the selection of CALIBRATION.

(k) DAT Calibration Init is highlighted in the ITEM window.

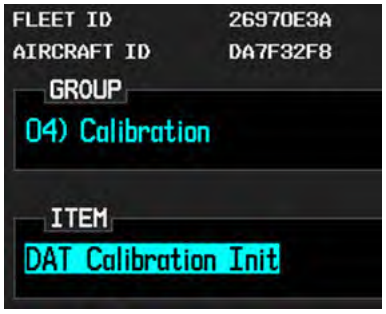

(l) Rotate the small FMS knob to highlight Stall Heat Gnd Threshold.



(m) Press ENT to confirm the selection of Stall Heat Gnd Threshold.

(n) The PRODUCT window is filled with all of the options that can be loaded.

(o) Select the CLR All softkey.



(p) Using the small FMS knob, highlight the option that is just larger than the documented AOA_HT_MON_L CAL VAL.

(q) Press ENT to check the selected box.

(r) Press the Load Softkey, the option configuration begins to load.

(s) Acknowledge the load being complete by pressing the ENT button on PFD1.



(t) Do the Stall Heat Fail Annunciation Verification, refer to Chapter 30-30.2.C.

L. Cable Loss Adjustment

(1) Connect external electrical power to the airplane (refer to chapter 24-40).

(2) Put the aircraft in Configuration mode:

(a) Pull the PFD 1, PFD 2 and MFD circuit breakers.

(b) Set the BATT 1 and BATT 2 switches to ON.

(c) Press ENTER on the pilot's PFD while resetting the PFD 1 circuit breaker.

(d) Press ENTER on the co-pilot's PFD while resetting the PFD 2 circuit breaker.

(e) Press ENTER on the MFD while resetting the MFD circuit breaker.

(f) INITIALIZING SYSTEM message should be displayed on all three displays.

(3) Use the FMS knob to select the GTS Configuration Page in the GTS page group.

(4) Using the FMS knob go to the TOP ANT CBL LOSS field.

Note: The TOP ANT CBL LOSS field should be set to 2.8dB.

(5) Using the FMS knob select the TOP ANT CBL LOSS field and change it to 1.8dB.

(6) Update the configuration module:

(a) Select the System Upload Page on PFD1.

(b) Press the UPDT CFG softkey at the bottom of the display.

(c) Update configuration Module?' is displayed

(d) Press ENT to acknowledge the prompt.

Note: The system updates the configuration module located in PFD 1 connector.

(7) Confirm the configuration:

(a) Select the Configuration Manager page on PFD1.

(b) Press the CNFM CFG softkey at the bottom of the display.

(c) The prompt Confirm configuration as expected configuration appears with OK selected. Press ENT to confirm the configuration.

(8) Set the BATT 1 and BATT 2 switches to off.

(9) Test the cable loss adjustment as follows:

(a) Set the BATT 1 and BATT 2 switches to ON.

Note: Cycling power will put the G1000 NXi system back in normal mode for this test.

(b) On the MFD, navigate to the Traffic Map.

(c) Turn off ADS-B using the softkey.

(d) Verify the STBY Traffic softkey is highlighted green.

Note: Make sure XPDR 1 and XPDR 2 circuit breakers are in.

(e) Press the Traffic Test Softkey. Verify that the traffic test completes and gives an audible and visual "traffic system test passed" annunciation.

(f) Press TAS OPER t key to turn ADS-B on.

(g) Set the BATT 1 and BATT 2 switches to off.

(h) Remove external electrical power from the airplane (refer to chapter 24-40).

2. Standby Instrument Software Loading Procedure (L3 Harris ESI-500 Only)

Note: For the Garmin GI 275 Electronic Flight Instrument installed under STC SA02658SE, refer to the ICA for the STC for software loading procedures.

A. Installation Setup

Note: This procedure is used to configure and calibrate the ESI-500 after installation.

Note: Use the Menu button to exit a Menu screen. An Exit menu is displayed with the following items: 'Save Changes' and 'Exit Without Saving'. ESI-500 returns to the Maintenance Mode.

(1) Contact Epic Aircraft to obtain the MicroSD card loaded with the correct software:

Epic Aircraft, LLC
22590 Nelson Road
Bend, OR 97701
503-318-8849
https://epicaircraft.com/customer-support/
customersupport@epicaircraft.com

(2) Make sure aircraft power is off and the ESI-500 is not powered on.

(3) Insert the MicroSD card loaded with the configuration Options file (ac.bin) in the slot on the front of the ESI-500.

(4) Pull the STBY INSTR circuit breaker.

(5) Connect external electrical power to the airplane (refer to Chapter 24-40).

(6) Set the BATT 1 and BATT 2 switches to ON.

(7) Press and hold the knob on the ESI-500 and reset the STDY INTSR circuit breaker. Continue to hold until the acknowledge screen (if applicable) or normal display mode is shown.

(a) If the ESI-500 has the Synthetic vision function, press the Menu button to acknowledge database details.

(8) Press the menu button.

(9) Rotate the knob until the System Install menu item is highlighted, then press the knob.

(10) An 'Enter Maintenance Mode?' confirmation message is shown on the screen. Press the knob to Confirm.

(11) The ESI-500 automatically cycles power and enters the Maintenance Mode as indicated on the top of the screen.

(12) Rotate the knob until Configuration Option Loading is highlighted and press the knob to select.

(13) The 'Current' and 'Update To' configuration options versions are shown.

(14) Press the knob to Confirm Load and Reset.

Note: When the download is complete, the ESI-500 will reset back into the maintenance mode.

(15) Confirmation of the configuration file load is accomplished by selecting the System ID Maintenance menu item. Verify the part number for the aircraft configuration file from provided with the MicroSD card is listed under the Aircraft Config file data on the screen.

(16) Remove the MicroSD card.

(17) Rotate the knob until exit is highlighted and press the knob to select.

(18) Set the BATT 1 and BATT 2 switches to off.

(19) Disconnect external electrical power from the airplane (refer to Chapter 24-40).

SOFTWARE LOADING PROCEDURES

1. Garmin Software Loading (SN: K014 and K086 and On)

CAUTION: Software loading procedures should only be performed with guidance from Epic Aircraft. The correct loader cards will be provided as needed. Contact Epic Aircraft Customer Support before proceeding:

Epic Aircraft, LLC
22590 Nelson Road
Bend, OR 97701
541-237-7272
https://epicaircraft.com/customer-support/
customersupport@epicaircraft.com

Note: When replacing a Garmin LRU, refer to section 6.3 of the latest revision of the G1000 NXi Line Maintenance Manual for the Epic E1000, PN 190-02330-01 for software loading procedures.

Note: Sections A through G must be performed together.

Note: All Garmin LRU circuit breakers must be in when performing the software loading procedure.

The following table defines which options should be loaded for each aircraft configuration. These options are all loaded from the Loader Card.

Garmin Options	
Option	**Notes**
GMA 350c – Factory	Use if GMA has not been previously loaded
GMA 350c – Update	Use if GMA has been previously loaded
GSR 56	Use if GSR 56 is installed
GWX	Use if GWX is installed
Calibration Options	
Option	**Notes**
DAT Calibration Init	Use for initial load or to reset DAT Cal Tables
Fuel Cal – Delete	Use to delete the Fuel Calibration Tables
Stall Heat Gnd Threshold	Use to reset Stall Heat CAS Threshold

A. Display Software Loading

Note: GDU to GDU software loading eliminates the need to move loader cards to each GDU during software loading. All loading procedures are done via PFD1. This procedure ensures all GDU's are at the same software level.

(1) GDU to GDU Software Loading

(a) Connect external power to the airplane (refer to Chapter 24-40).

(b) Remove any SD cards from the top and bottom slots of the MFD.

(c) Set the BATT 1 and BATT 2 switches to ON.

(d) Open the PFD1 circuit breaker.

(e) Insert the software loader card into the top card slot of the PFD1.

(f) While pressing the ENT key on PFD 1, close the PFD1 circuit breaker.

(g) Release the ENT key when "INITIALIZNG SYSTEM" is displayed in the upper left-hand corner of PFD1:

(h) Press the YES softkey at the bottom of PFD1. "UPDATING SYSTEM FILES, PLEASE WAIT" message is displayed.

Note: The system will indicate a successful update.

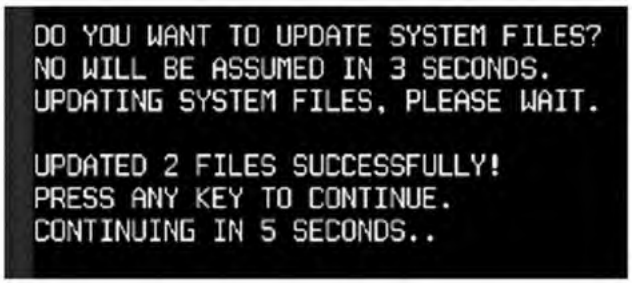

(i) Press any key to continue. The message "NEW SOFTWARE HAS BEEN LOADED. RESTARTING UNIT" in amber is displayed.

(j) The message "INITIALIZING SYSTEM CREW PROFILE DATA CLEARED" is displayed. The SYSTEM UPLOAD page is displayed.

B. Baseline Software Loading and Configuration

Note: Baseline software and configuration is loaded to the system after display software has been loaded.

Note: Steps B, C, D, and E must be performed together, and in that order. If step B needs to be repeated, steps C, D, and E must be performed again as well.

(1) Put the aircraft in Configuration mode:
   (a) Pull the PFD 1, PFD 2 and MFD circuit breakers.
   (b) Set the BATT 1 and BATT 2 switches to ON.
   (c) Press ENTER on the pilot's PFD while resetting the PFD 1 circuit breaker.
   (d) Press ENTER on the co-pilot's PFD while resetting the PFD 2 circuit breaker.
   (e) Press ENTER on the MFD while resetting the MFD circuit breaker.
   (f) INITIALIZING SYSTEM message should be displayed on all three displays.
(2) Go to the SYSTEM UPLOAD Page.
(3) Press the FMS knob on PFD1. "E1000 Baseline" is highlighted in a small window.
(4) Rotate the small FMS knob to highlight "E1000 Baseline" in the Small window.

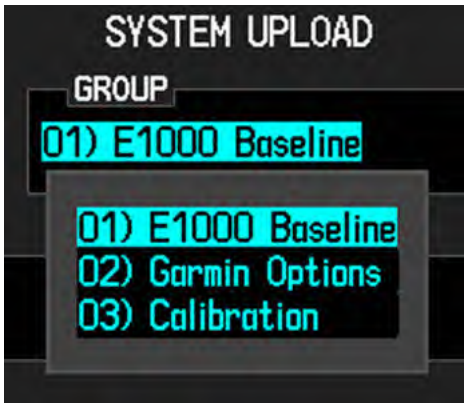

(5) Press ENT to confirm the selection of E1000 Baseline.
(6) Epic E1000 is highlighted in the ITEM window.
(7) Rotate the small FMS knob to highlight Epic E1000.



(8) Press ENT to confirm the selection of Epic E1000.

Note: The PRODUCT window is filled with all of the Software and Config items that can be loaded.

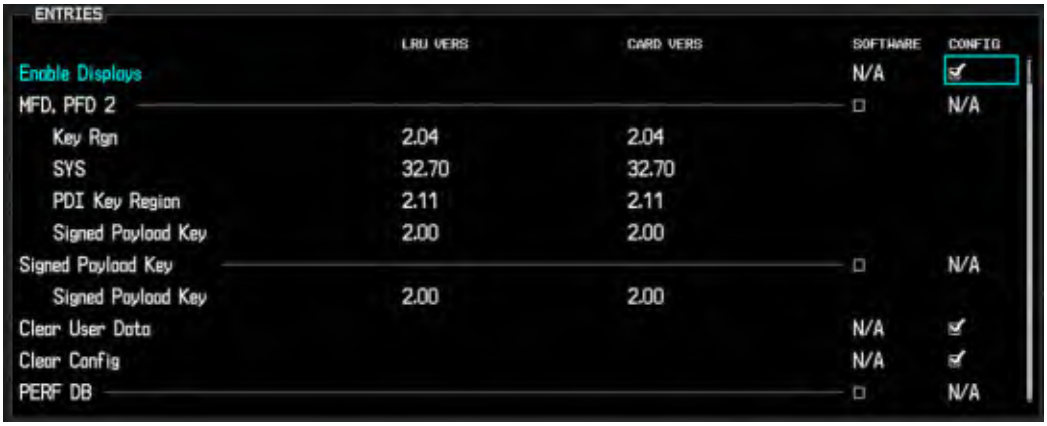

(9) Select the CHK ALL softkey.

(10) Press the Load Softkey, the baseline software and configuration begin to load.

(11) Acknowledge the load being complete by touching the ENT button on PFD1.



(12) View the SUMMARY field and ensure that all items are ‘complete’. Verify that PASS appears in green at the check boxes.

(13) Press the “UPDT CFG” softkey then select OK to update the configuration module.

C. Loading Optional Equipment Software and Configuration

Note: Load software and configuration for each item of optional equipment that is installed in the aircraft after loading the Autopilot Options Software and Configuration

(1) Ensure the system is in configuration mode on the SYSTEM UPLOAD Page.

(2) Press the FMS knob on PFD 1. "E1000 Baseline" is highlighted in the GROUP window.

(3) Turn the large FMS knob on PFD1. "E1000 baseline" is highlighted in a small window.

(4) Turn the small FMS knob until "Garmin Options" is highlighted.

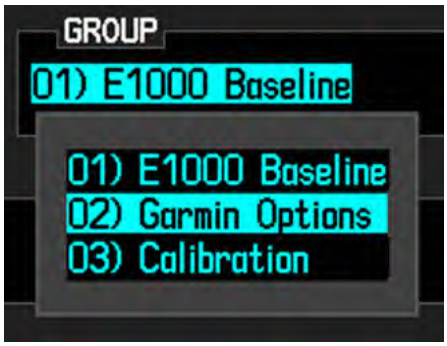

(5) Press ENT. The first option is displayed in the OPTION window. Turn the small FMS knob. A small window is displayed showing the possible options.

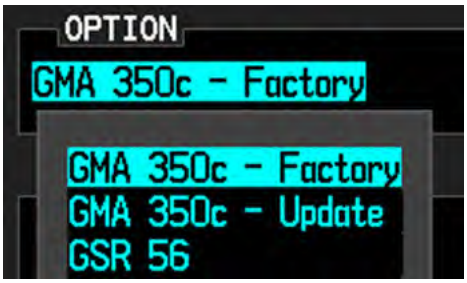

(6) Highlight the desired option and press the ENT key. The ENTRIES window fills with software and configuration.

(7) If all options will be loaded, press the CHK All Softkey. If Individual options are to be loaded, press the CLR All, then highlight the individual options and press ENT to select.

(8) Press "Load" at the bottom of PFD1. All software and configuration for the option starts loading.

(9) Acknowledge the load being complete by pressing the ENT key.



(10) View the SUMMARY field and ensure that all items are 'complete'. Verify that PASS appears in green at the check boxes.

(11) Press the "UPDT CFG" softkey to update the configuration module.

D. Loading Calibration Files and Configuration

Note: Load Calibration Files and Configuration for each item after loading Optional Equipment Software and Configuration.

(1) Make sure the system is in configuration mode.
(2) Go to the SYSTEM UPLOAD Page.
(3) Press the FMS knob on PFD 1. “E1000 Baseline” is highlighted in the GROUP window.
(4) Turn the large FMS knob on PFD1. “E1000 Baseline” is highlighted in a small window.
(5) Turn the small FMS knob. “Calibration” is highlighted.

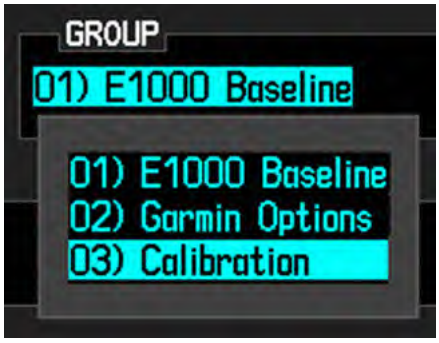

(6) Press ENT. The first option is displayed in the ITEM window. Turn the small FMS knob. A small window is displayed showing the possible options.

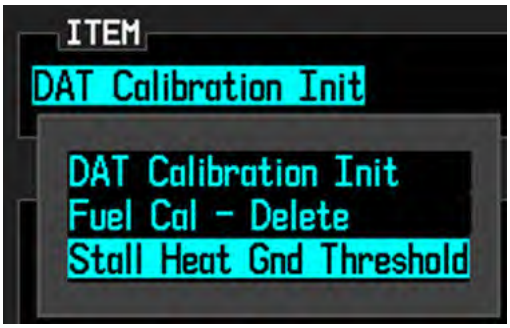

(7) Highlight the desired option and press the ENT key. The PRODUCT window fills with calibration configuration options.

Note: If loading DAT Calibration Init, it is not required to load all options in the PRODUCT column. It is acceptable to only select the specific options needed.

(8) If all options will be loaded, press the CHK All Softkey. If Individual options are to be loaded, press the CLR All, then highlight the individual options and press ENT to select.

(9) Press “Load” at the bottom of PFD1. All software and configuration for the option starts loading.

(10) Acknowledge the load being complete by pressing the ENT key.

Note: If loading the DAT Calibration Init, calibration procedures in step (H) must be performed. If loading Fuel Cal-Delete, fuel calibration must be performed, refer to Chapter 28-40.2.(5).



E. Enablement Card Options

The following tables contain the enablement cards and database cards to load depending on the configuration of the aircraft.

Note: Once an enablement card is utilized the card becomes locked to the aircraft system ID. The enablement cards must be retained for that aircraft if there is a need to enable the feature again.

Table 39-11.1: E1000 AX Enablement Cards

Description	P/N	Standard/Optional
SD Card,GDU1xxx SVS Unlock,2 PFDs	010-03905-E0	Standard
SD Card, GIFD SurfaceWatch Enable		
SD Card, GDU1XXX Enhanced AFCS Unlock		
SD Card,GDU10xx Chart Unlock, Heavy AC		
SD Card, Auto Throttle Integration		
SD Card,GDU10xx TAWS Unlock	010-03905-04	Optional
SD Card,GDU1XXX TAS to TCAS I Enablement	010-00330-A1	Optional
SD Card, GX000, Taxiway Routing Enablement SysRel 7.51+	010-03905-18	Optional
SD Card, GX000, GWX Processor Auto-mode LH, GCS TD Enablement	010-00330-JA	Optional
SD Card, GX000, GWX Ground Clutter Enablement		
SD Card, GX000, GWX Turbulence Detection Enablement		

Table 39-11.2: E1000 AX Database Cards

Description	P/N	Standard/Optional
Integrated Avionics - NavData Starter Kit for Jepp Databases	010-11093-00	Optional
SD Card, GIFD, Supp DBs, IFR/VFR Charts, Black	010-00474-50	Optional

(1) Insert the enablement card for the desired feature in the top slot of PFD1.
(2) Power up the system in configuration mode. PFD1 displays the SYSTEM UPLOAD page.
(3) Press the small FMS knob. “SD CARD” is highlighted in the CARD window.
(4) Turn the small FMS knob. “SD CARD” is highlighted in the small window.
(5) Press ENT. Turn the small FMS knob. The option to be enabled is highlighted in the GROUP window.
(6) Press the ENT key. The PRODUCT window populates with software and configuration.
(7) Select the “Load” softkey.

Note: Do not cancel a load in progress. If a failure occurs, wait until the fail message appears before proceeding.

(8) Monitor the status of the load. When the load is finished, press ENT to acknowledge.
(9) View the SUMMARY field to ensure that all items are ‘complete’. Verify the PASS appears in green at the check boxes.
(10) Press the “UPDT CFG” softkey then select OK to update the configuration module.

F. Aircraft Registration Number Entry

(1) Insert the software loader card in the top slot of PFD1.
(2) Put the aircraft in Configuration mode:
  (a) Pull the PFD 1, PFD 2 and MFD circuit breakers.
  (b) Set the BATT 1 and BATT 2 switches to ON.
  (c) Press ENTER on the pilot’s PFD while resetting the PFD 1 circuit breaker.
  (d) Press ENTER on the co-pilot’s PFD while resetting the PFD 2 circuit breaker.
  (e) Press ENTER on the MFD while resetting the MFD circuit breaker.
  (f) INITIALIZING SYSTEM message should be displayed on all three displays.
(3) Select NO to acknowledge the UPDATE prompt.
(4) Select the AIRCRAFT CONFIGURATION page on PFD 1
(5) Press the small FMS knob on PFD1 and activate the cursor on the "AIRCRAFT REGISTRATION" field. Enter the aircraft's tail number.
(6) Select the "ICAO ADDRESS" and enter the aircrafts 24-bit ICAO address.
(7) If applicable select the "ICAO REGION" field and select the ICAO region. Otherwise, leave at "NONE".
(8) If applicable, select the "DOMAIN IDENTIFIER" field and enter the number. Otherwise, leave blank.
(9) Select the "VFR CODE" field and enter the desired code that will become active when the VFR key on the PFD is pressed.
(10) Press the "SET GTS" softkey and acknowledge the "Save Parameters" prompt by pressing ENT.
(11) Acknowledge the GTS Config load completion prompt by pressing ENT.

(12) Press the "SET GTX 1" softkey and acknowledge the "Save Parameters" prompt by pressing ENT.

(13) Press the "SET GTX 2" softkey and acknowledge the "Save Parameters" prompt by pressing ENT.

(14) Acknowledge the GTX Config load completion prompt by pressing ENT.

(15) Deactivate the cursor.

G. GIA Rigging

This procedure explains how to rig the Autothrottle TLA sensor for the GIA

(1) Ensure the system is in Configuration Mode

(2) Use the FMS knob to navigate to the GIA 64x tab, then to GIA Rigging.

(3) Under TLA GIA 1, ensure Rig Point 1 is highlighted and shows 0% below.

(4) Pull the throttle lever all the way back (aft) until it hits the gate, and continue holding it in this position.

(5) Press the "RIG" soft key, the sensor value should be captured in the table under "RIGGED"

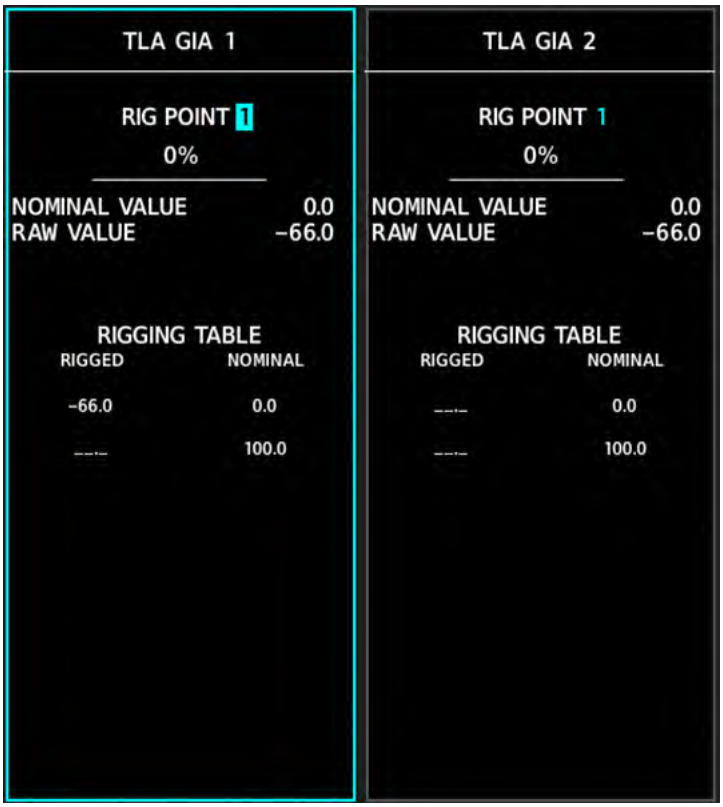

(6) Use the FMS knob to switch RIG POINT 1 from 0% to 100%

(7) Push the throttle lever all the way up (forward) until it hits the gate, and continue holding it in this position.

(8) Press the "RIG" soft key, the value should be captured in the rigging table.

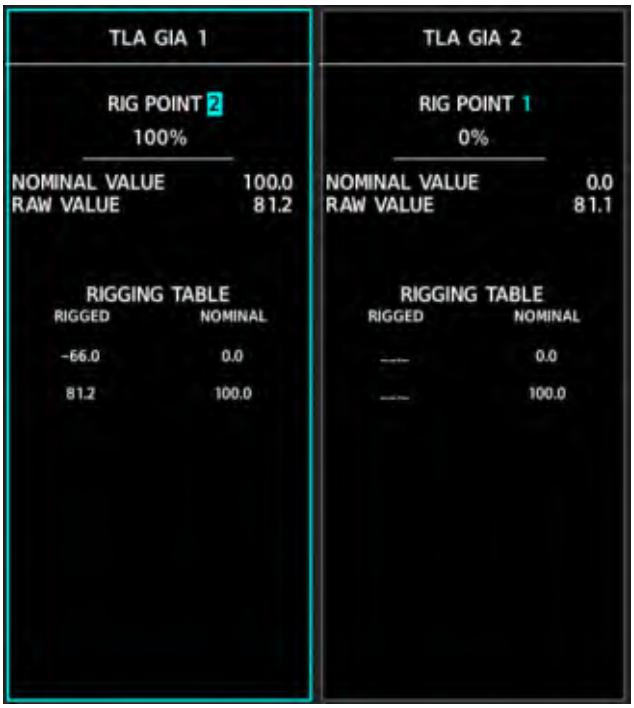

(9) Press the "STORE" soft key and hit ENT when asked to confirm storing the values. Once complete, the table should display "RIGGED" in green.

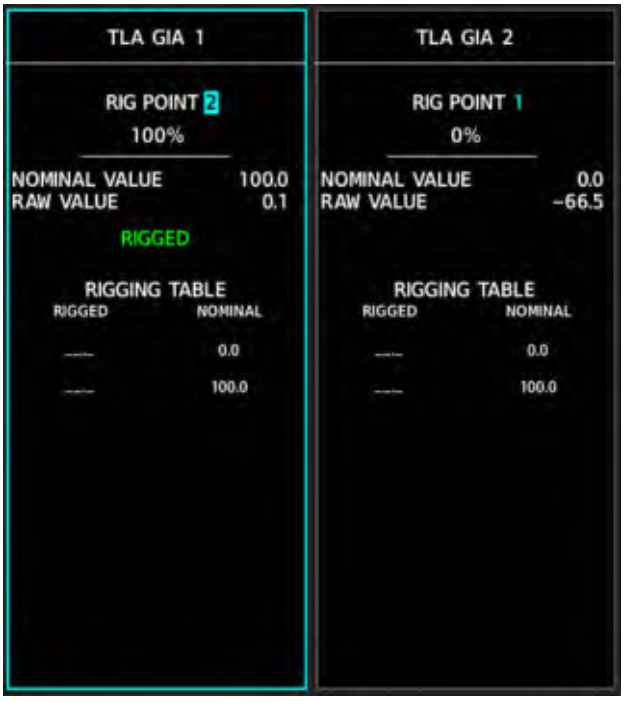

(10) Repeat steps 3-9 for TLA GIA 2.

H. DAT Calibration

Note: The DAT Calibration Init Option file should be loaded during initial software loading. The individual calibration files can be target loaded if it ever is necessary to recalibrate. Whenever a calibration file is reloaded, perform the individual calibration procedure per the following sections

(1) Put the aircraft in configuration mode as follows:
- (a) Connect external electrical power to the airplane (refer to Chapter 24-40).
- (b) Pull the PFD 1, PFD 2 and MFD circuit breakers.
- (c) Set the BATT 1 and BATT 2 switches to ON.
- (d) Press ENTER on the pilot's PFD while resetting the PFD 1 circuit breaker.
- (e) Press ENTER on the co-pilot's PFD while resetting the PFD 2 circuit breaker.
- (f) Press ENTER on the MFD while resetting the MFD circuit breaker.
- (g) INITIALIZING SYSTEM message should be displayed on all three displays.

(2) Select the DAT Calibration Page, under the CAL Page Group.

(3) Trim Calibration:

Note: For initial software loads, a custom Trim Indication Calibration must be completed.

- (a) Aileron Trim
  - (i) Press the small FMS knob. RAW PNT 0 of the TRIM_ROLL Calibration Table is highlighted.
  - (ii) Run the Aileron trim to the left (Trailing edge DOWN) until it reaches its max extension.
  - (iii) Press the Cal Softkey and acknowledge the "Confirm the Calibration Point" by pressing ENT.
  - (iv) Turn the large FMS knob to select RAW PNT 1 in the Calibration Table.
  - (v) Run the Aileron trim until it is at the neutral position (in line with the aileron trailing edge).
    - (1) For aircraft without GWX installed, run the trim tab until it is in-line with the aileron trailing edge.
    - (2) For aircraft with GWX installed, run the trim until the trailing edge of the trim tab measures 5° +/- 0.5° below the trailing edge of the aileron.
  - (vi) Press the Cal Softkey and acknowledge the "Confirm the Calibration Point" by pressing ENT.
  - (vii) Turn the large FMS knob to select RAW PNT 2 in the Calibration Table.

(viii) Run the Aileron trim to the Right (Trailing edge UP) until it reaches its max extension.

(ix) Press the Cal Softkey and acknowledge the “Confirm the Calibration Point” by pressing ENT.

(b) Rudder Trim

(i) Turn the large FMS knob to select RAW PNT 0 in the TRIM_YAW Calibration Table.

(ii) Run the Rudder trim to the left (Trailing edge Right) until it reaches its max extension.

(iii) Press the Cal Softkey and acknowledge the “Confirm the Calibration Point” by pressing ENT.

(iv) Turn the large FMS knob to select RAW PNT 1 in the Calibration Table.

(v) Run the Rudder trim until it is at the neutral position (in line with the Rudder trailing edge).

(vi) Press the Cal Softkey and acknowledge the “Confirm the Calibration Point” by pressing ENT.

(vii) Turn the large FMS knob to select RAW PNT 2 in the Calibration Table.

(viii) Run the Rudder trim to the Right (Trailing edge LEFT) until it reaches its max extension.

(ix) Press the Cal Softkey and acknowledge the “Confirm the Calibration Point” by pressing ENT.

(c) Elevator Trim

(i) Turn the large FMS knob to select RAW PNT 0 in the TRIM_PITCH_AVG Calibration Table.

(ii) Run the Elevator trim down (Trailing edge UP) until it reaches its max extension.

(iii) Press the Cal Softkey and acknowledge the “Confirm the Calibration Point” by pressing ENT.

(iv) Turn the large FMS knob to select RAW PNT 1 in the Calibration Table.

(v) Run the Elevator trim until it is at the neutral position (in line with the Elevators trailing edge).

(vi) Press the Cal Softkey and acknowledge the “Confirm the Calibration Point” by pressing ENT.

(vii) Turn the large FMS knob to select RAW PNT 2 in the Calibration Table.

(viii) Run the Elevator trim up (Trailing edge DOWN) until it reaches its max extension.

(ix) Press the Cal Softkey and acknowledge the “Confirm the Calibration Point” by pressing ENT.

(4) Amp Indication Calibration

(a) Generator Amp Input Calibration:

(i) Press the TBL 4-7 Softkey to switch DAT Calibration Pages.

(ii) Press the small FMS knob. RAW PNT 0 of the GEN_GAUGE_21 Calibration Table is highlighted.

(iii) Turn the large FMS knob to select RAW PNT 0 in the BAT_1_BUS_AMP Calibration Table

(iv) Press the Cal Softkey and acknowledge the "Confirm the calibration Point" by pressing ENT.

(b) Alternator Amp Input Calibration:

(i) Press the TBL 8-11 Softkey to switch DAT Calibration Pages.

(ii) Press the small FMS knob. RAW PNT 0 of the BAT_2_BUS_AMP Calibration Table is highlighted.

(iii) Press the Cal Softkey and acknowledge the "Confirm the calibration Point" by pressing ENT.

(5) Pressure Sensor Input Calibration

Note: Perform each of the following Pressure Sensor Input Calibrations with the pressure sensor unpressurized.

(a) Oil Pressure Input Calibration

(i) Press the TBL 8-11 Softkey to switch DAT Calibration Pages.

(ii) Press the small FMS knob. RAW PNT 0 of the BAT_2_BUS_AMP Calibration Table is highlighted.

(iii) Turn the large FMS knob to select RAW PNT 0 in the ENG_1_OIL_PRES Calibration Table

(iv) Press the Cal Softkey and acknowledge the "Confirm the calibration Point" by pressing ENT.

(b) Nitrogen Pressure Input Calibration

(i) Press the TBL 8-11 Softkey to switch DAT Calibration Pages.

(ii) Press the small FMS knob. RAW PNT 0 of the BAT_2_BUS_AMP Calibration Table is highlighted.

(iii) Turn the large FMS knob to select RAW PNT 0 in the AUX_HYD_-PRESS_LOW Calibration Table

(iv) Press the Cal Softkey and acknowledge the "Confirm the calibration Point" by pressing ENT.

(c) Fuel Pressure Input Calibration

(i) Press the TBL 8-11 Softkey to switch DAT Calibration Pages.

(ii) Press the small FMS knob. RAW PNT 0 of the BAT_2_BUS_AMP Calibration Table is highlighted.

(iii) Turn the large FMS knob to select RAW PNT 0 in the ENG_1_FUEL_-PRESS Calibration Table

(iv) Press the Cal Softkey and acknowledge the "Confirm the calibration Point" by pressing ENT.

(6) Updating the Configuration Module

(a) After completing all software loading procedures update the configuration module by doing the following:

(i) Select the System Upload Page on PFD1.

(ii) Press the UPDT CFG softkey at the bottom of the display.

(iii) Update configuration Module?' is displayed

(iv) Press ENT to acknowledge the prompt.

(v) The system updates the configuration module located in PFD 1 connector.

(7) Confirm Configuration

(a) After completing the update of the configuration module, Confirm the Configuration by doing the following:

(i) Select the Configuration Manager page on PFD1.

(ii) Press the CNFM CFG softkey at the bottom of the display.

(iii) The prompt Confirm configuration as expected configuration appears with OK selected. Press ENT to confirm the configuration.

I. Stall Heat Fail Annunciation Calibration

Note: Complete the following steps in the order shown to Calibrate the Stall Heater Inputs and Monitor.

(1) Put the aircraft in Configuration mode:

(a) Pull the PFD 1, PFD 2 and MFD circuit breakers.

(b) Set the BATT 1 and BATT 2 switches to ON.

(c) Press ENTER on the pilot's PFD while resetting the PFD 1 circuit breaker.

(d) Press ENTER on the co-pilot's PFD while resetting the PFD 2 circuit breaker.

(e) Press ENTER on the MFD while resetting the MFD circuit breaker.

(f) INITIALIZING SYSTEM message should be displayed on all three displays.

(2) Perform the Stall Heat Monitor Input Calibration

(a) Press the small FMS knob. RAW PNT 0 of the TRIM_ROLL Calibration Table is highlighted.

(b) Turn the large FMS knob to select RAW PNT 0 in the GEN_GAUGE_20 Calibration Table.

(c) Press the Cal Softkey and acknowledge the "Confirm the calibration Point" by pressing ENT.

(d) Press the TBL 4-7 Softkey to switch DAT Calibration Pages.

(e) Press the small FMS knob. RAW PNT 0 of the GEN_GAUGE_21 is highlighted.

(f) Press the Cal Softkey and acknowledge the "Confirm the calibration Point" by pressing ENT.

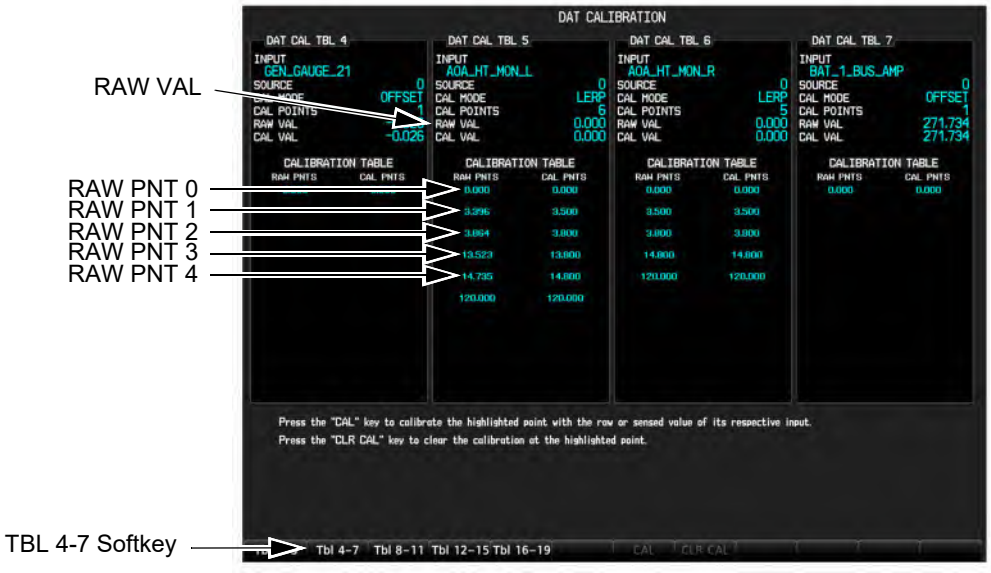

(3) Perform the Left Stall Heat Fail Monitor Calibration:

Note: It is normal to see the L PITOT HT FAIL and R PITOT HT FAIL cautions illuminate during this procedure.

(a) Make sure the airplane is in a weight-on-wheels configuration.

(b) Open the PUSHER, IGNITER, SPS CMP 1A, SPS CMP 1B, SPS CMP 2A, SPS CMP 2B, XPDR 1, XPDR 2, L PITOT HEAT, and R PITOT HEAT circuit breakers.

(c) Make sure the L STALL HEAT, R STALL HEAT, L PITOT HT CTRL and R PITOT HT CTRL circuit breakers are closed.

(d) Manipulate OAT 1 and 2 to indicate greater than 10°C and within 3°C of each other.

(e) Manipulate NG to indicate greater than 4%.

(f) Press the TBL 4-7 Softkey to switch DAT Calibration Pages.

(g) Press the small FMS knob. RAW PNT 0 of the GEN_GAUGE_21 Calibration Table is highlighted.

CAUTION: To prevent damage, verify RAW VAL is greater than 12. If it is not, turn the PITOT / STALL HEAT switch off immediately. Ensure ground heat is on for no longer than 5 minutes.

Note: The supplemental heaters and pitot heaters should not heat up.

(h) Turn the large FMS knob to select RAW PNT 4 in the AOA_HT_MON_L Calibration Table.

(i) Set the PITOT / STALL HEAT Switch to ON. Leave the heater on for at least 4 minutes.

(j) Press the Cal Softkey and acknowledge the "Confirm the Calibration Point" by pressing ENT.

(k) Set the PITOT / STALL HEAT Switch to off.

(l) Let the Stall Heaters cool down completely.

Note: Failure to allow the heaters to cool down could result in an inaccurate calibration. Cooling time can be reduced by using shop air to blow over the SPS lift transducer.

(m) Manipulate OAT 1 and 2 to indicate less than 10°C and within 3°C of each other.

CAUTION: To prevent damage, verify RAW VAL is greater than 12. If it is not, turn the PITOT / STALL HEAT switch off immediately. Ensure ground heat is on for no longer than 5 minutes.

Note: The supplemental heaters and pitot heaters should heat up.

(n) Turn the large FMS knob to select RAW PNT 3 in the AOA_HT_MON_L Calibration Table.

(o) Set the PITOT / STALL HEAT Switch to ON. Leave the heater on for at least 4 minutes.

(p) Press the Cal Softkey and acknowledge the "Confirm the Calibration Point" by pressing ENT.

(q) Set the PITOT / STALL HEAT Switch to off.

(r) Let the Stall Heaters cool down completely.

Note: Failure to allow the heaters to cool down could result in an inaccurate calibration. Cooling time can be reduced by using shop air to blow over the SPS lift transducer.

(s) Put the airplane into air mode by actuating both of the Weight on Wheels Switches.

(t) Manipulate OAT 1 and 2 to indicate greater than 10°C and within 3°C of each other.

(u) Turn the large FMS knob to select RAW PNT 2 in the AOA_HT_MON_L Calibration Table.

CAUTION: To prevent damage, ensure air heat is on for no longer than 5 seconds.

Note: The supplemental heaters and pitot heaters should not heat up.

(v) Set the PITOT / STALL HEAT Switch to ON. Leave the heater on for 3-4 sec and then press the Cal Softkey and acknowledge the "Confirm the Calibration Point" by pressing ENT. Set the PITOT / STALL HEAT Switch to off.

(w) Let the Stall Heaters cool down completely.

Note: Failure to allow the heaters to cool down could result in an inaccurate calibration. Cooling time can be reduced by using shop air to blow over the SPS lift transducer.

(x) Manipulate OAT 1 and 2 to indicate less than 10°C and within 3°C of each other.

(y) Turn the large FMS knob to select RAW PNT 1 in the AOA_HT_MON_L Calibration Table.

CAUTION: To prevent damage, ensure air heat is on for no longer than 5 seconds.

Note: The supplemental heaters and pitot heaters should heat up.

(z) Set the PITOT / STALL HEAT Switch to ON. Leave the heater on for 3-4 sec and then press the Cal Softkey and acknowledge the "Confirm the Calibration Point" by pressing ENT. Set the PITOT / STALL HEAT Switch to off.

(aa) Let the Stall Heaters cool down completely.

(ab) Make sure the RAW PNT values are as follows:

(i) RAW PNT 1 is set to 3.5 +/-0.5 and is less than RAW PNT 2.

(ii) RAW PNT 2 is set to 3.8 +/-0.5.

(iii) RAW PNT 3 is set to 13.8 +/- 1.0 and is less than RAW PNT 4.

(iv) RAW PNT 4 is set to 14.8 +/- 1.0.

Note: If any value is outside of its range, the heaters and wiring must be checked for proper function.

(ac) Update the configuration module:

(i) Select the System Upload Page on PFD1.

(ii) Press the UPDT CFG softkey at the bottom of the display.

(iii) Update configuration Module? is displayed

(iv) Press ENT to acknowledge the prompt.

(v) The system updates the configuration module located in PFD 1 connector.

(ad) Confirm the configuration:

(i) Select the Configuration Manager page on PFD1.

(ii) Press the CNFM CFG softkey at the bottom of the display.

(iii) The prompt Confirm configuration as expected configuration appears with OK selected. Press ENT to confirm the configuration.

(ae) Set the BATT 1 and BATT 2 switches to off.

(af) Disconnect the ground power unit from the airplane (refer to Chapter 24-40).

(ag) Close the PUSHER, IGNITER, SPS CMP 1A, SPS CMP 1B, SPS CMP 2A, SPS CMP 2B, XPDR 1, XPDR 2, L PITOT HEAT, and R PITOT HEAT circuit breakers.

(4) Perform the Right Stall Heat Fail Monitor Calibration:

Note: It is normal to see the L PITOT HT FAIL and R PITOT HT FAIL cautions illuminate during this procedure.

(a) Make sure the airplane is in a weight-on-wheels configuration.

(b) Open the PUSHER, IGNITER, SPS CMP 1A, SPS CMP 1B, SPS CMP 2A, SPS CMP 2B, XPDR 1, XPDR 2, L PITOT HEAT, and R PITOT HEAT circuit breakers.

(c) Make sure the L STALL HEAT, R STALL HEAT, L PITOT HT CTRL and R PITOT HT CTRL circuit breakers are closed.

(d) Manipulate OAT 1 and 2 to indicate greater than 10°C and within 3°C of each other.

(e) Manipulate NG to indicate greater than 4%.

(f) Press the TBL 4-7 Softkey to switch DAT Calibration Pages.

(g) Press the small FMS knob. RAW PNT 0 of the GEN_GAUGE_21 Calibration Table is highlighted.

CAUTION: To prevent damage, verify RAW VAL is greater than 12. If it is not, turn the PITOT / STALL HEAT switch off immediately. Ensure ground heat is on for no longer than 5 minutes.

Note: The supplemental heaters and pitot heaters should not heat up.

(h) Turn the large FMS knob to select RAW PNT 3 in the AOA_HT_MON_R Calibration Table.

(i) Set the PITOT / STALL HEAT Switch to ON. Leave the heater on for at least 4 minutes.

(j) Press the Cal Softkey and acknowledge the "Confirm the Calibration Point" by pressing ENT.

(k) Set the PITOT / STALL HEAT Switch to off.

(l) Let the Stall Heaters cool down completely.

Note: Failure to allow the heaters to cool down could result in an inaccurate calibration. Cooling time can be reduced by using shop air to blow over the SPS lift transducer.

(m) Put the airplane into air mode by actuating both of the Weight on Wheels Switches.

(n) Manipulate OAT 1 and 2 to indicate greater than 10°C and within 3°C of each other.

(o) Turn the large FMS knob to select RAW PNT 2 in the AOA_HT_MON_R Calibration Table.

CAUTION: To prevent damage, ensure air heat is on for no longer than 5 seconds.

Note: The supplemental heaters and pitot heaters should not heat up.

(p) Set the PITOT / STALL HEAT Switch to ON. Leave the heater on for 3-4 sec and then press the Cal Softkey and acknowledge the "Confirm the Calibration Point" by pressing ENT. Set the PITOT / STALL HEAT Switch to off.

(q) Let the Stall Heaters cool down completely.

Note: Failure to allow the heaters to cool down could result in an inaccurate calibration. Cooling time can be reduced by using shop air to blow over the SPS lift transducer.

(r) Manipulate OAT 1 and 2 to indicate less than 10°C and within 3°C of each other.

(s) Turn the large FMS knob to select RAW PNT 1 in the AOA_HT_MON_R Calibration Table.

CAUTION: To prevent damage, ensure air heat is on for no longer than 5 seconds.

Note: The supplemental heaters and pitot heaters should heat up.

(t) Set the PITOT / STALL HEAT Switch to ON. Leave the heater on for 3-4 sec and then press the Cal Softkey and acknowledge the "Confirm the Calibration Point" by pressing ENT. Set the PITOT / STALL HEAT Switch to off.

(u) Let the Stall Heaters cool down completely.

(v) Make sure the RAW PNT values are as follows:

(i) RAW PNT 1 is set to 3.5 +/-0.5 and is less than RAW PNT 2.

(ii) RAW PNT 2 is set to 3.8 +/-0.5.

(iii) RAW PNT 4 is set to 14.8 +/- 1.0.

Note: If any value is outside of its range, the heaters and wiring must be checked for proper function.

(w) Update the configuration module:

(i) Select the System Upload Page on PFD1.

(ii) Press the UPDT CFG softkey at the bottom of the display.

(iii) Update configuration Module? is displayed

(iv) Press ENT to acknowledge the prompt.

(v) The system updates the configuration module located in PFD 1 connector.

(x) Confirm the configuration:

(i) Select the Configuration Manager page on PFD1.

(ii) Press the CNFM CFG softkey at the bottom of the display.

(iii) The prompt Confirm configuration as expected configuration appears with OK selected. Press ENT to confirm the configuration.

(y) Set the BATT 1 and BATT 2 switches to off.

(z) Disconnect the ground power unit from the airplane (refer to Chapter 24-40).

(aa) Close the PUSHER, IGNITER, SPS CMP 1A, SPS CMP 1B, SPS CMP 2A, SPS CMP 2B, XPDR 1, XPDR 2, L PITOT HEAT, and R PITOT HEAT circuit breakers.

J. Stall Heat Threshold Calibration

This section defines the method for incorporating an offset to the Stall Heat Monitor threshold. This section is should be completed if the Stall Heat Monitor is erroneously triggering the L/R Stall Heat Fail CAS messages.

Note: Contact Epic Aircraft for troubleshooting guidance and assistance before performing this procedure:

Epic Aircraft, LLC
22590 Nelson Road
Bend, OR 97701
503-318-8849
https://epicaircraft.com/customer-support/
customersupport@epicaircraft.com

(1) Prepare for threshold calibration as follows:
  (a) Calculate the Offset to be applied.
  (b) Power the aircraft on in Configuration Mode.
  (c) Select the DAT Calibration Page, under the CAL Page Group.

(2) Left Stall Heat Offset
  (a)
  (b) Press the small FMS knob. RAW PNT 0 of the TRIM_ROLL Calibration Table is highlighted.
  (c) Turn the large FMS knob to select RAW PNT 0 in the GEN_GAUGE_20 Calibration Table.

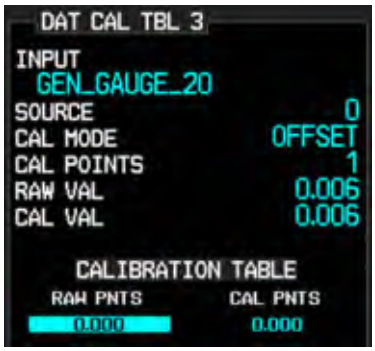

  (d) Manipulate the input until the calculated offset is achieved.

(e) Press the CAL Softkey and acknowledge the “Confirm the calibration Point” by pressing ENT.

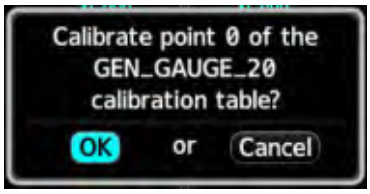

(3) Right Stall Heat Offset

(a) Press the small FMS knob. RAW PNT 0 of the TRIM_ROLL Calibration Table is highlighted.

(b) Press the TBL 4-7 Softkey to switch DAT Calibration Pages.

(c) Press the small FMS knob. RAW PNT 0 of the GEN_GAUGE_21 is highlighted.

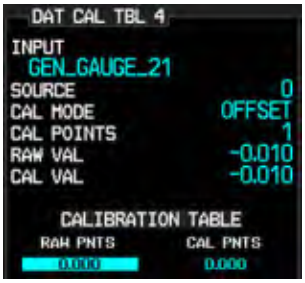

(d) Manipulate the input until the calculated offset is achieved.

(e) Press the Cal Softkey and acknowledge the “Confirm the calibration Point” by pressing ENT.

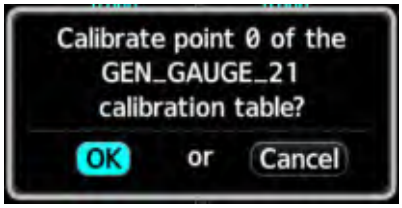

(4) Stall Heat Ground Mode Threshold Update

(a) Install the Loader Card.

(b) Open the L PITOT HEAT, and R PITOT HEAT circuit breakers.

(c) Make sure the L STALL HEAT, R STALL HEAT, L PITOT HT CTRL and R PITOT HT CTRL circuit breakers are closed.

(d) Verify NG is indicating less than 4%.

(e) Select the DAT Calibration Page, under the CAL Page Group.

(f) Press the TBL 4-7 Softkey to switch DAT Calibration Pages.

(g) Set the PITOT / STALL HEAT Switch to ON.

(i) Document the AOA_HT_MON_L CAL VAL after 30 seconds.

(h) Navigate to the SYSTEM UPLOAD Page.

(i) Press the FMS knob on PFD1. “E1000 Baseline” is highlighted in a small window.

(j) Rotate the small FMS knob to highlight “CALIBRATION” in the small window.

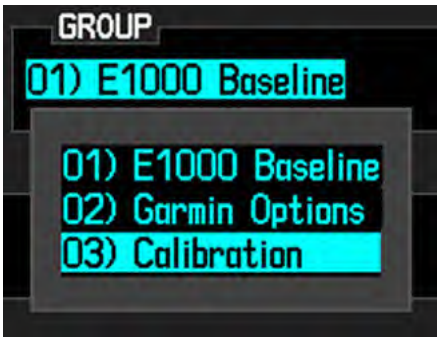

(k) Press ENT to confirm the selection of CALIBRATION.

(l) DAT Calibration Init is highlighted in the OPTION window.

(m) Rotate the small FMS knob to highlight Stall Heat Gnd Threshold.

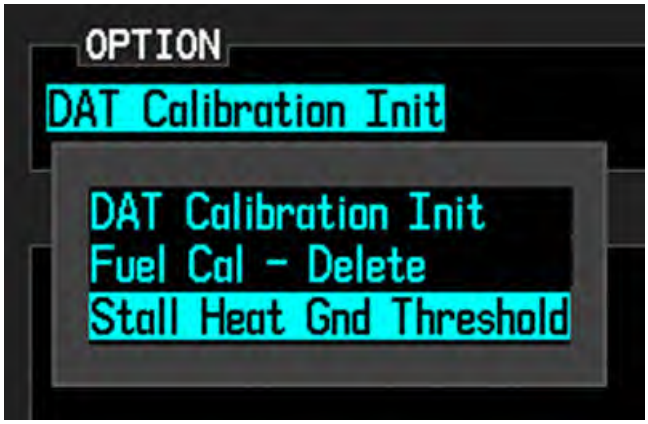

(n) Press ENT to confirm the selection of Stall Heat Gnd Threshold.

(o) The PRODUCT window is filled with all of the options that can be loaded.

(p) Select the CLR All softkey.

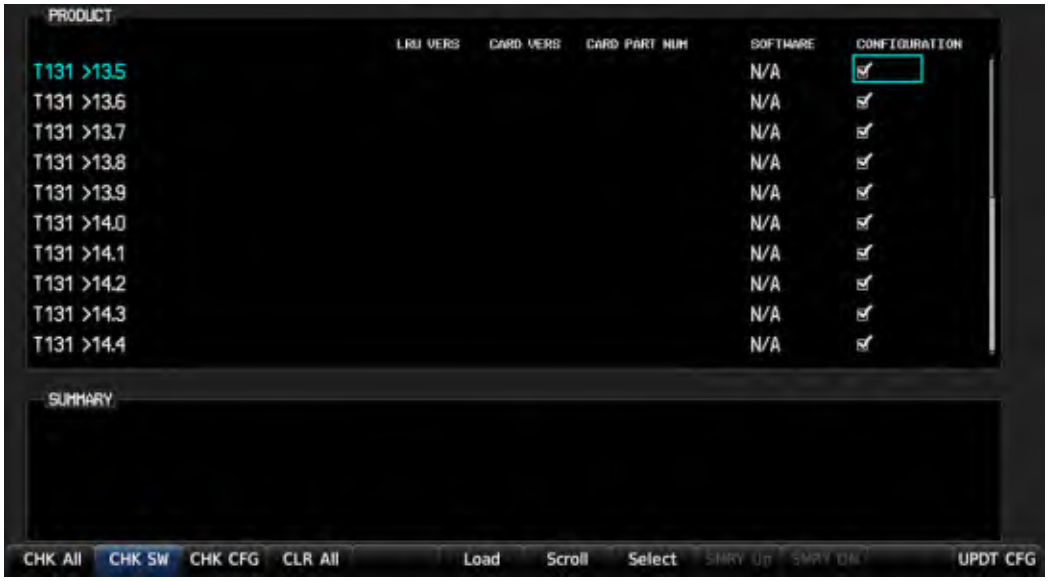

(q) Using the small FMS knob, highlight the option that is just larger than the documented AOA_HT_MON_L CAL VAL.

(r) Press ENT to check the selected box.

(s) Press the Load Softkey, the option configuration begins to load.

(t) Acknowledge the load being complete by pressing the ENT button on PFD1.



(u) Do the Stall Heat Fail Annunciation Verification, refer to Chapter 30-30.2.C.

K. Cable Loss Adjustment

(1) Connect external electrical power to the airplane (refer to Chapter 24-40).

(2) Put the aircraft in Configuration mode:

(a) Pull the PFD 1, PFD 2 and MFD circuit breakers.

(b) Set the BATT 1 and BATT 2 switches to ON.

(c) Press ENTER on the pilot's PFD while resetting the PFD 1 circuit breaker.

(d) Press ENTER on the co-pilot's PFD while resetting the PFD 2 circuit breaker.

(e) Press ENTER on the MFD while resetting the MFD circuit breaker.

(f) INITIALIZING SYSTEM message should be displayed on all three displays.

(3) Use the FMS knob to select the GTS Configuration Page in the GTS page group.

(4) Using the FMS knob go to the TOP ANT CBL LOSS field.

Note: The TOP ANT CBL LOSS field should be set to 2.8dB.

(5) Using the FMS knob select the TOP ANT CBL LOSS field and change it to 1.8dB.

(6) Update the configuration module:

(a) Select the System Upload Page on PFD1.

(b) Press the UPDT CFG softkey at the bottom of the display.

(c) Update configuration Module?' is displayed

(d) Press ENT to acknowledge the prompt.

Note: The system updates the configuration module located in PFD 1 connector.

(7) Confirm the configuration:

(a) Select the Configuration Manager page on PFD1.

(b) Press the CNFM CFG softkey at the bottom of the display.

(c) The prompt Confirm configuration as expected configuration appears with OK selected. Press ENT to confirm the configuration.

(8) Set the BATT 1 and BATT 2 switches to off.

(9) Test the cable loss adjustment as follows:

(a) Set the BATT 1 and BATT 2 switches to ON.

Note: Cycling power will put the G1000 NXi system back in normal mode for this test.

(b) On the MFD, navigate to the Traffic Map.

(c) Turn off ADS-B using the softkey.

(d) Verify the STBY Traffic softkey is highlighted green.

Note: Make sure XPDR 1 and XPDR 2 circuit breakers are in.

(e) Press the Traffic Test Softkey. Verify that the traffic test completes and gives an audible and visual "traffic system test passed" annunciation.

(f) Press TAS OPER t key to turn ADS-B on.

(g) Set the BATT 1 and BATT 2 switches to off.

(h) Remove external electrical power from the airplane (refer to chapter 24-40).

(10) The 'Current' and 'Update To' configuration options versions are shown.

(11) Press the knob to Confirm Load and Reset.

Note: When the download is complete, the ESI-500 will reset back into the maintenance mode.

(12) Confirmation of the configuration file load is accomplished by selecting the System ID Maintenance menu item. Verify the part number for the aircraft configuration file from provided with the MicroSD card is listed under the Aircraft Config file data on the screen.

(13) Remove the MicroSD card.

(14) Rotate the knob until exit is highlighted and press the knob to select.

(15) Set the BATT 1 and BATT 2 switches to off.

(16) Disconnect external electrical power from the airplane (refer to Chapter 24-40).

This Page Intentionally Left Blank

ELECTRICAL AND ELECTRONIC JUNCTION BOXES

1. Description

The relay box provides a central location for mounting a variety of system relays. The relay box is removable as an assembly and interfaces with the aircraft systems through two electrical connectors. The relay box is mounted under the floor of the passenger compartment, just aft of the left mid passenger seat.

For a list of components installed in the relay box, refer to the appropriate Wiring Manual:
K003-K085 (except K014) - E1000 Wiring Manual, P/N SK05000002
K014, K086 and on - E1000 AX Wiring Manual, P/N SK05003002

For information on troubleshooting and maintenance, refer to the relevant system chapters in this manual.

2. Maintenance Practices

A. Relay Box

(1) Removal

(a) Set the BATT 1 and BATT 2 switches to off.

(b) Disconnect external electrical power from the airplane (refer to Chapter 24-40).

(c) Remove the cowling (refer to Chapter 71-10).

(d) Disconnect the batteries:

(i) (K014 and K086 and on) Disconnect the battery quick disconnects.

WARNING: To reduce the possibility of personal injury and equipment damage, disconnect the negative battery cable before disconnecting the positive battery cable.

(ii) (K003-K085, excluding K014) Disconnect the negative battery cables first then the positive battery cables. Insulate the battery terminals.

(e) Remove the passenger compartment carpet and flooring. Refer to Chapter 25-20 and 53-20.

(f) Disconnect the electrical connectors from the relay box.

(g) Remove the bolts and washers attaching the relay box to the passenger floor support and remove the relay box.

(2) Installation

Note: When replacing relays, torque all fasteners attaching plastic relays connectors contained in the relay harness assembly to 5 in-lbs.

(a) Attach the relay box to the passenger compartment floor support using bolts and washers.

(b) Connect the electrical connectors to the relay box.

(c) Connect the batteries:

(i) (K014 and K086 and on) Connect the battery quick disconnects.

(ii) (K003-K085, excluding K014) Connect the batteries starting with the positive battery cables then the negative cables.

WARNING: To reduce the possibility of personal injury and equipment damage, connect the positive battery cable before connecting the negative battery cable.

(d) Do an operational check of the relay box as follows:

Note: Perform the following tests based on the system component(s) replaced. For components not listed here, contact Epic Aircraft for specific test procedures.

(i) Relay K113 or Relay K114, L/R Fuel Pump - do the fuel boost pump check, refer to Chapter 28-20.2.A(2)(r)-(w).

(ii) Relay K120 or Relay K121, L/R WoW - do the weight-on-wheels operational check, refer to Chapter 32-60.2.B(5) or 32-60.2.B(6).

(iii) Relay K132, Relay K136, Relay K141, or Relay K143 - Do the courtesy lights operational check, refer to Chapter 33-20.2.E.

(iv) Relay K105 or Relay K106, do the steps that follow:

(1) Open the AIL TRIM circuit breaker.

(2) Press the Aileron Trim switch on each yoke and make sure the aileron trim tab does not move.

(3) Reset the AIL TRIM circuit breaker.

(4) On Pilot Side Yoke, press the Aileron Trim switch left and make sure the trailing edge of aileron trim tab goes down.

(5) On the Pilot Side Yoke, press the Aileron Trim switch right and make sure the trailing edge of aileron trim tab goes up.

(6) Repeat steps (4) and (5) on the Co-Pilot Side Yoke.

(v) SK170 or SK171 - make sure the flaps move up and down.

(e) Install the passenger compartment flooring and carpet. Refer to Chapter 25-20 and 53-20.

(f) Install the cowling (refer to Chapter 71-10).

(3) Inspection

(a) Remove the passenger compartment carpet and flooring. Refer to Chapter 25-20 and 53-20.

(b) Inspect the connections and wiring for condition and security.

(c) Inspect the relay box attachment hardware for condition and security.

(d) Install the passenger flooring and carpet. Refer to Chapter 25-20 and 53-20.

Figure 39-30.1: .Relay Box

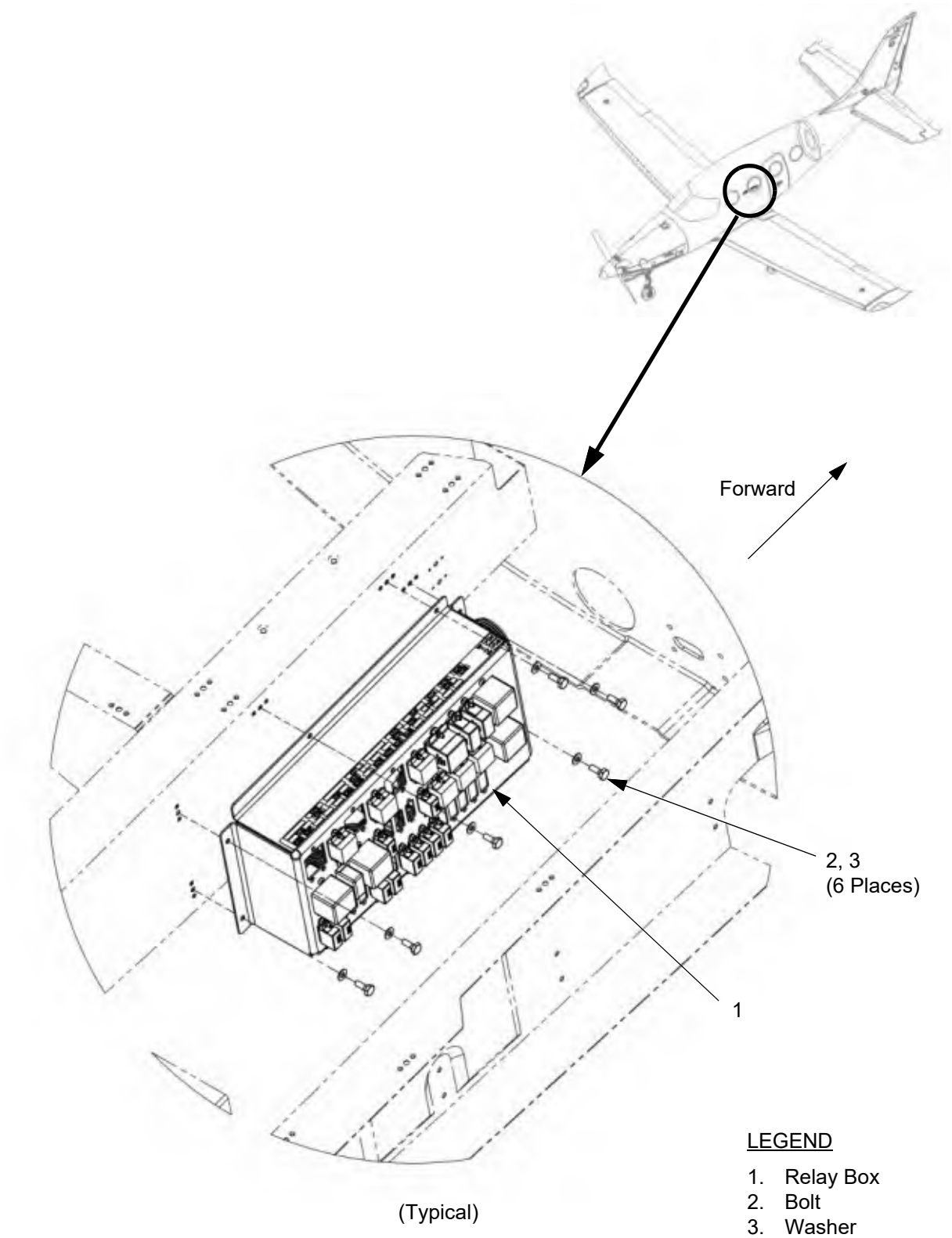

This Page Intentionally Left Blank

ELECTRICAL HARNESS

1. Description

This chapter provides information and procedures related to the instrument panel electrical harnesses.

Three electrical wiring harnesses are used to connect the avionics, navigation, and communication equipment in the instrument panel, yokes, and antennas to the airplane electrical system.

K003-K085 (except K014), refer to the current revision of the E1000 Wiring Manual, P/N SK05000002.

K014, K086 and on, refer to the current revision of the E1000 Wiring Manual, P/N SK05003002.

2. Maintenance Practices

A. Instrument Panel Harnesses

(1) Removal

(a) Set the BATT 1 and BATT 2 switches to OFF.

(b) Disconnect external electrical power from the airplane (refer to Chapter 24-40).

(c) Remove the cowling (refer to Chapter 71-10).

(d) Disconnect the batteries by disconnecting the negative battery cables first then the positive battery cables.

WARNING: To reduce the possibility of personal injury and equipment damage, disconnect the negative battery cable before disconnecting the positive battery cable.

(e) Insulate the battery terminals.

(f) Disconnect the equipment and components connected to the wiring harness.

(g) Tag the connectors.

(h) Cut cable ties.

(i) Remove clamps.

(j) Remove the electrical harness from the airplane.

(2) Installation

(a) Make connections to the tagged connectors.

(b) Secure the harness using cable ties and clamps.

(c) Connect the batteries starting with the positive battery cables then the negative cables.

WARNING: To reduce the possibility of personal injury and equipment damage, connect the positive battery cable before connecting the negative battery cable.

(d) Do required operational checks.

(e) Install the cowling (refer to Chapter 71-10).

Figure 39-80.1: Instrument Panel Electrical Harness (Sheet 1 of 8)

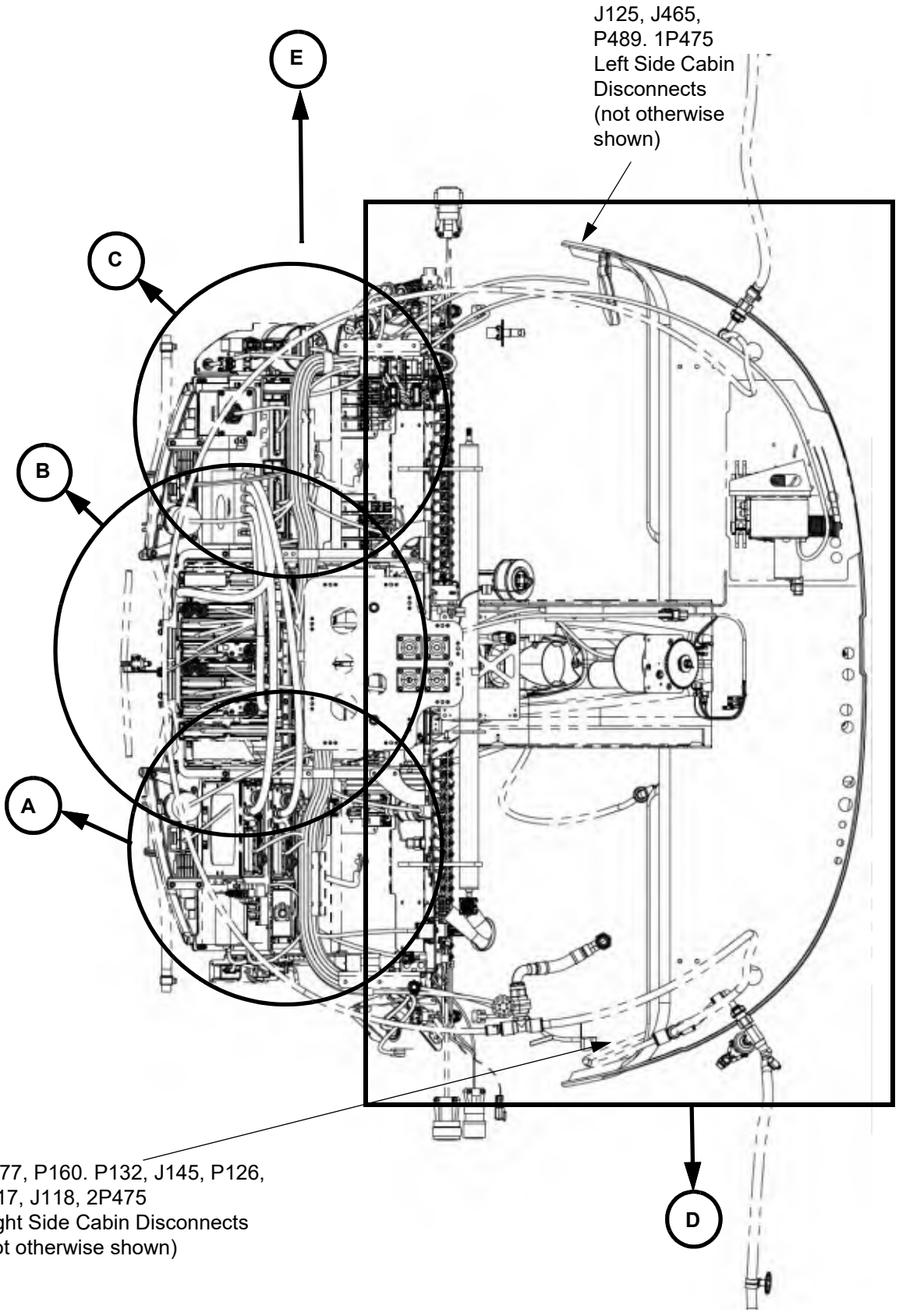

Figure 39-80.1: Instrument Panel Electrical Harness (Sheet 2 of 8)

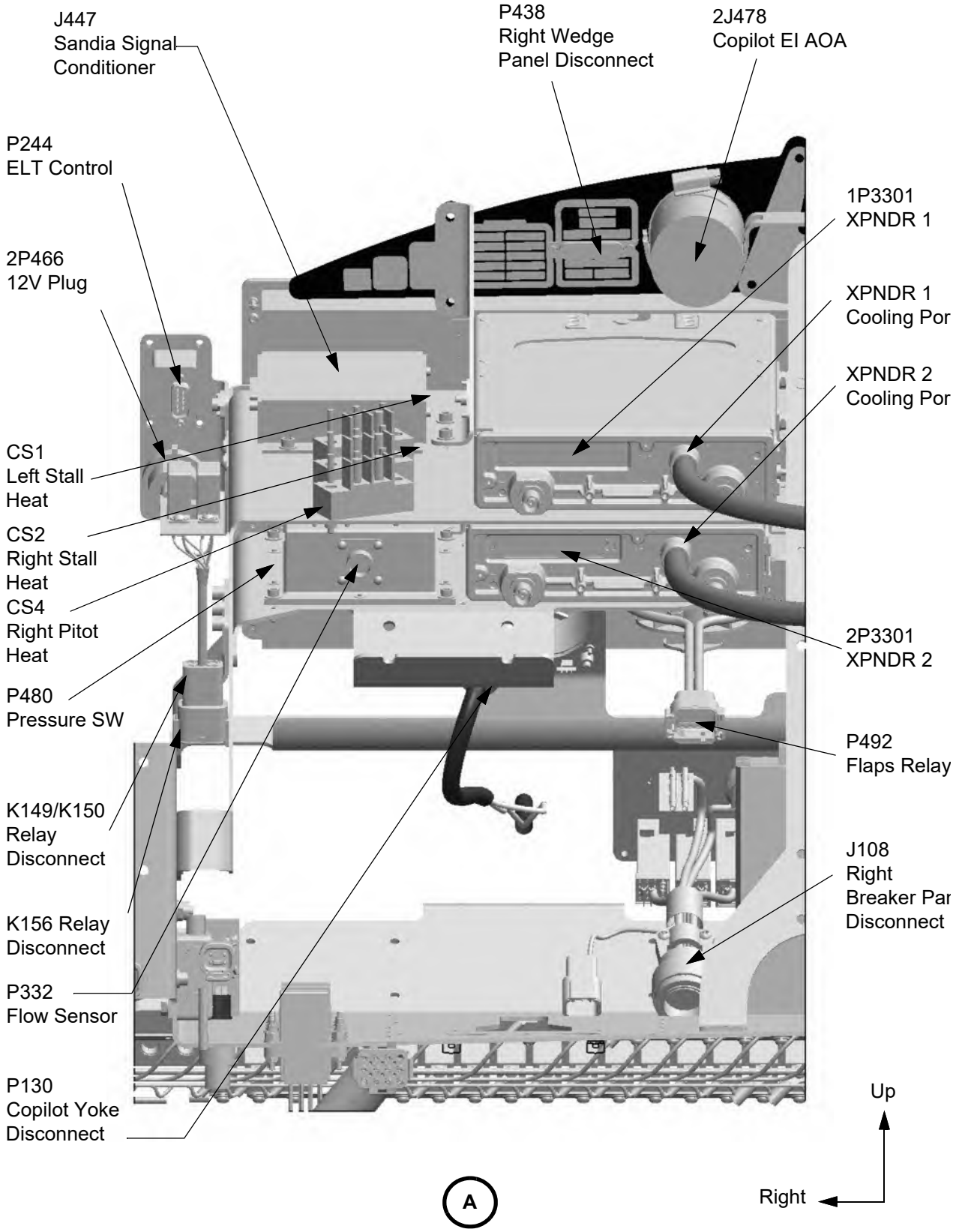

Figure 39-80.1: Instrument Panel Electrical Harness (Sheet 3 of 8)

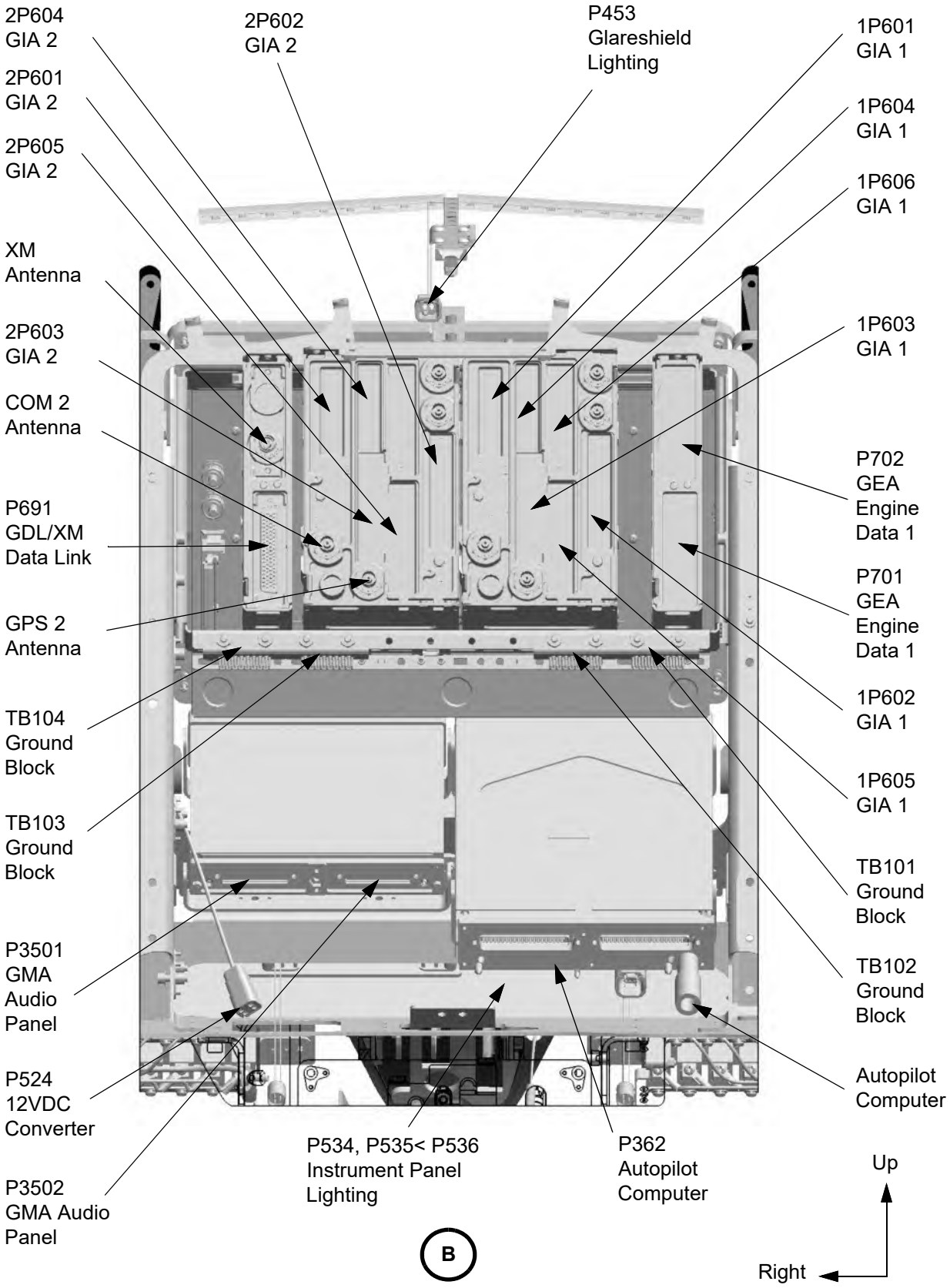

Figure 39-80.1: Instrument Panel Electrical Harness (Sheet 4 of 8)

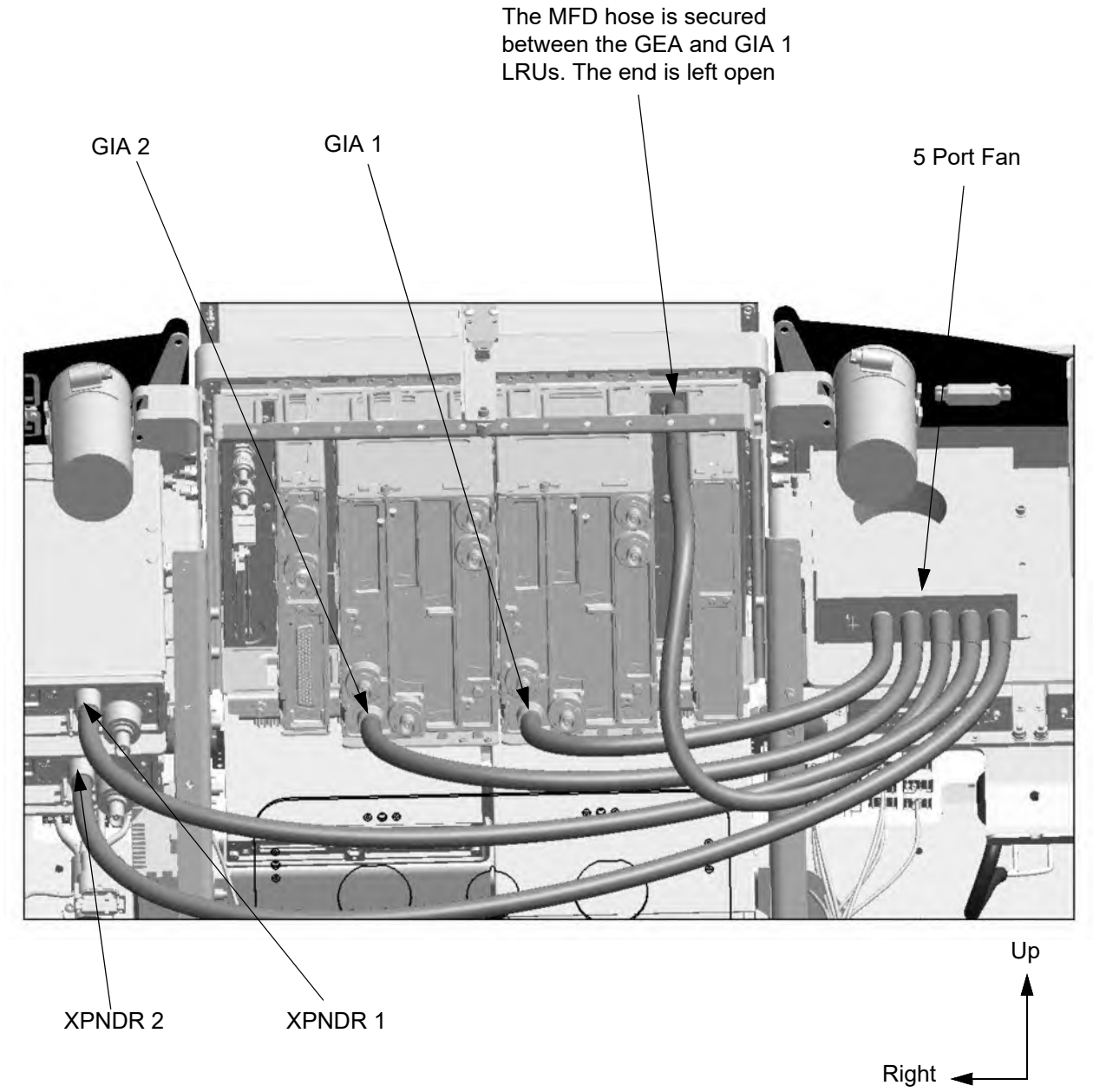

SCAT TUBE INSTALLATION

B1

Figure 39-80.1: Instrument Panel Electrical Harness (Sheet 5 of 8)

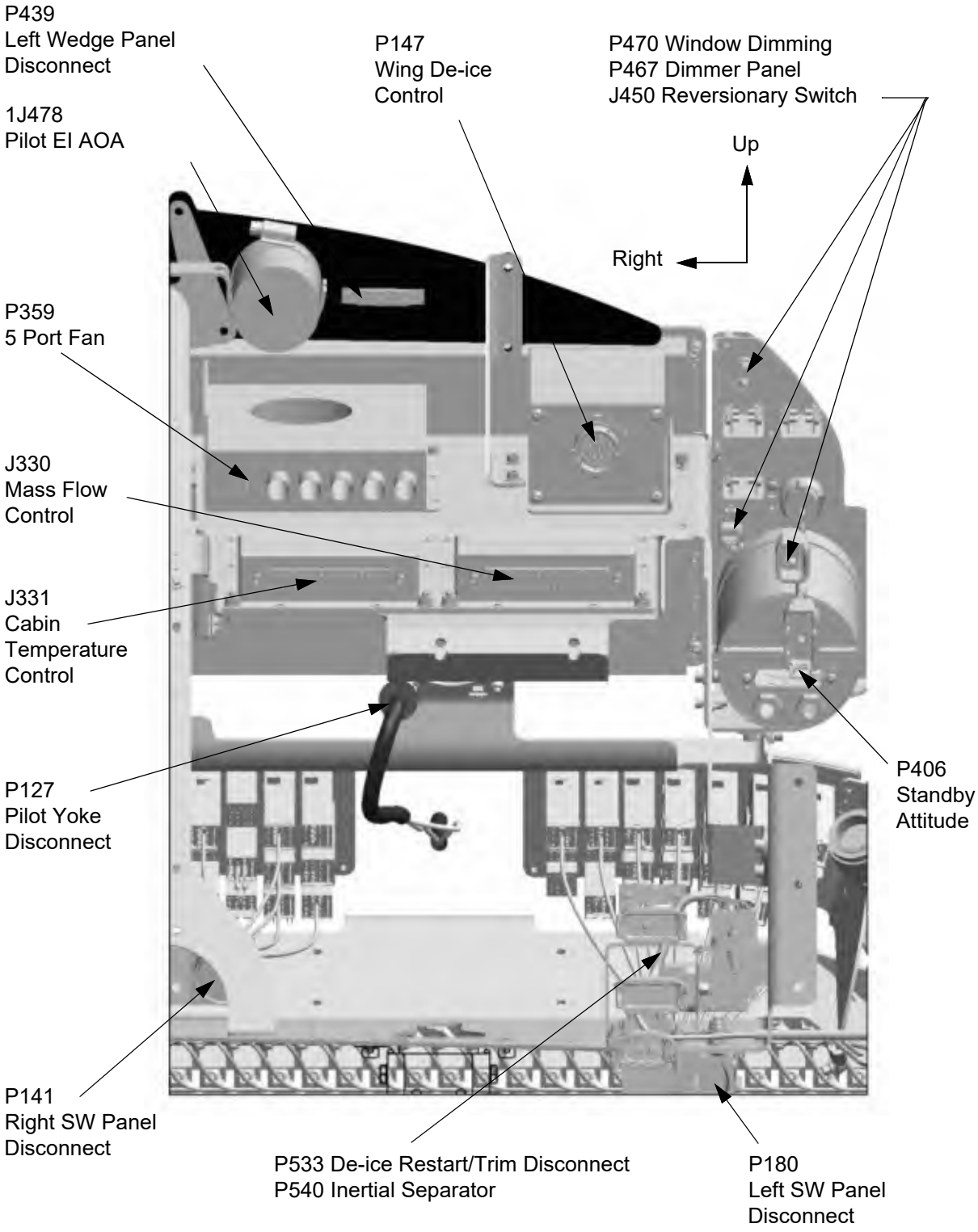

C

Figure 39-80.1: Instrument Panel Electrical Harness (Sheet 6 of 8)

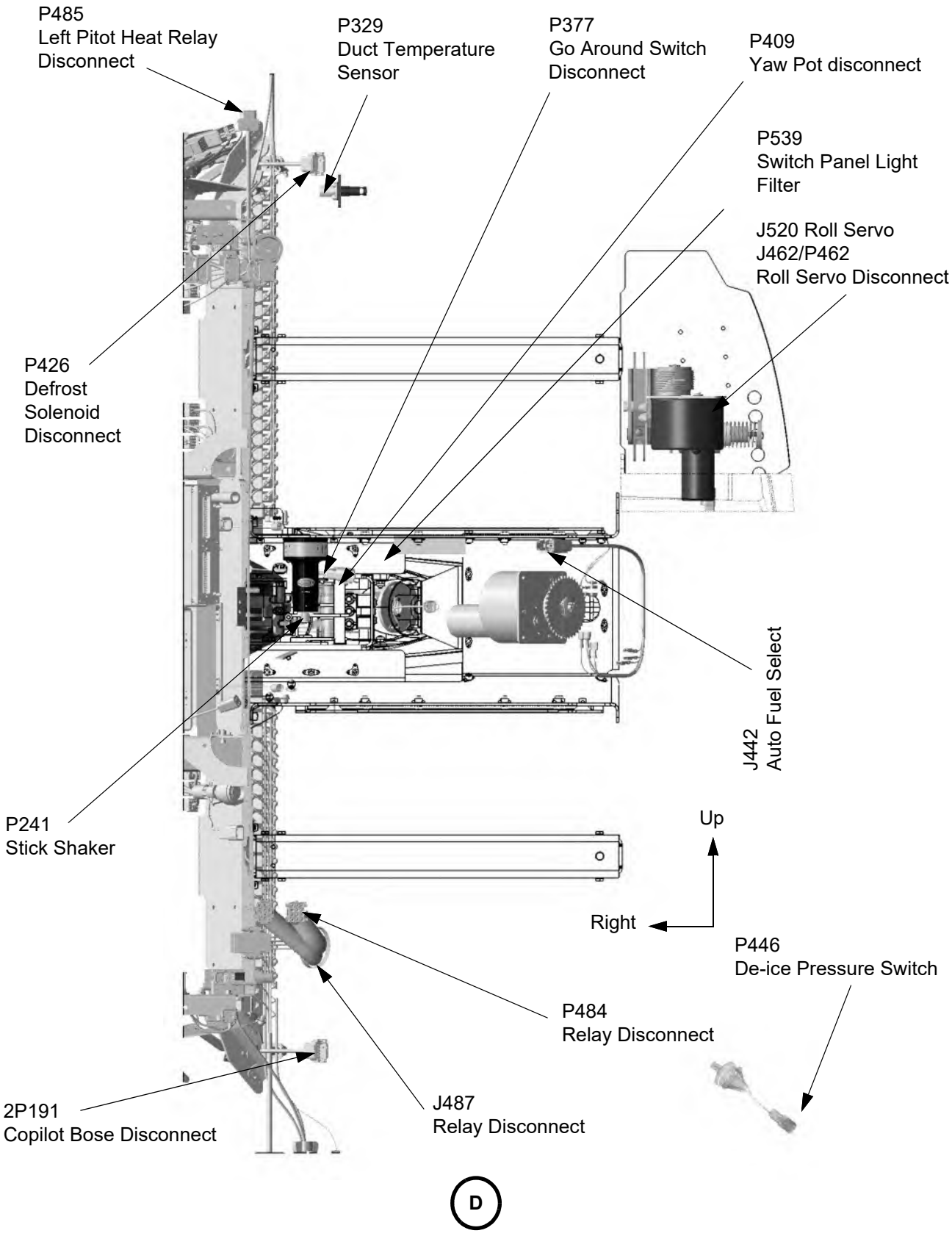

Figure 39-80.1: Instrument Panel Electrical Harness (Sheet 7 of 8)

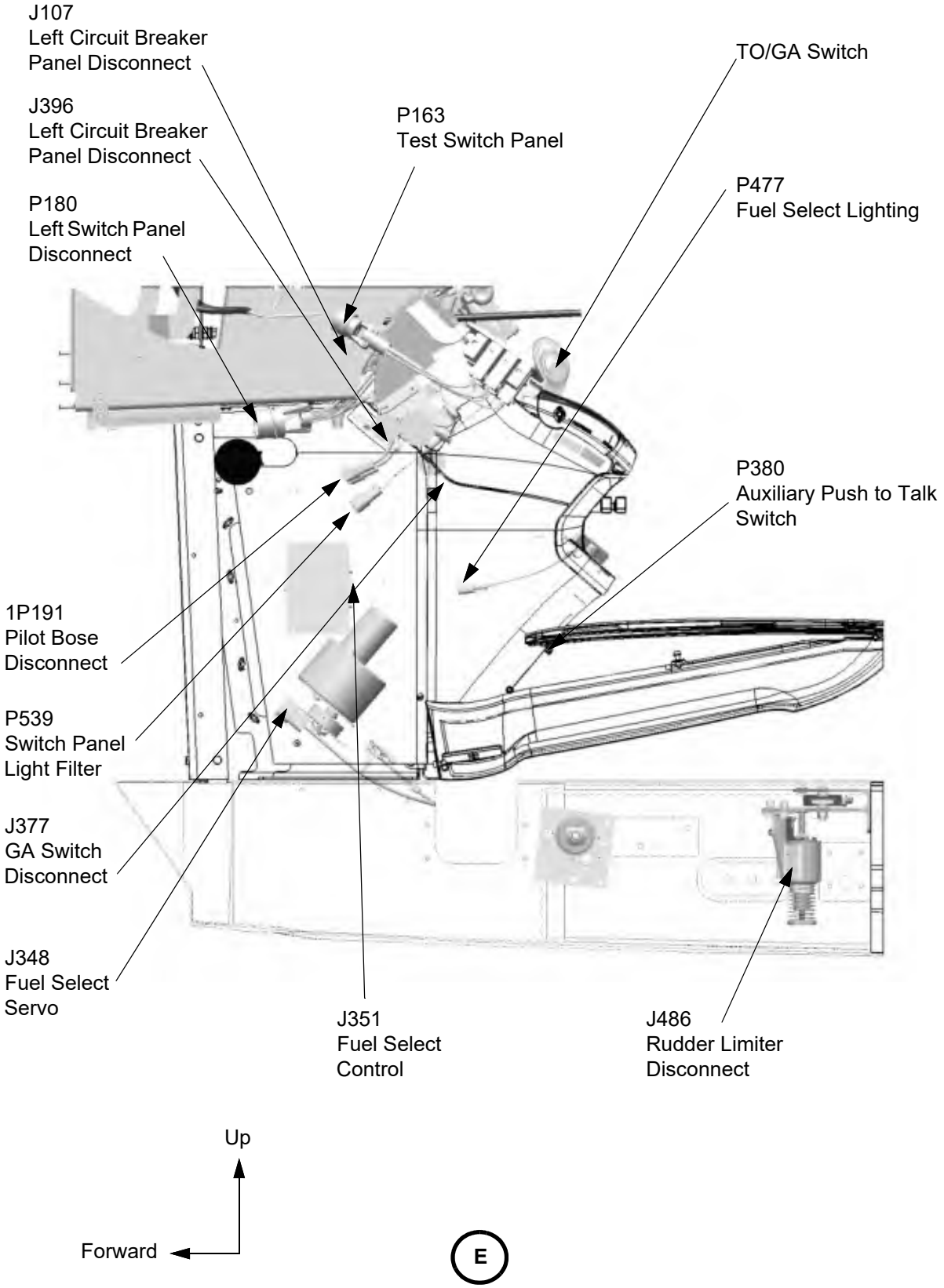

Figure 39-80.1: Instrument Panel Electrical Harness (Sheet 8 of 8)

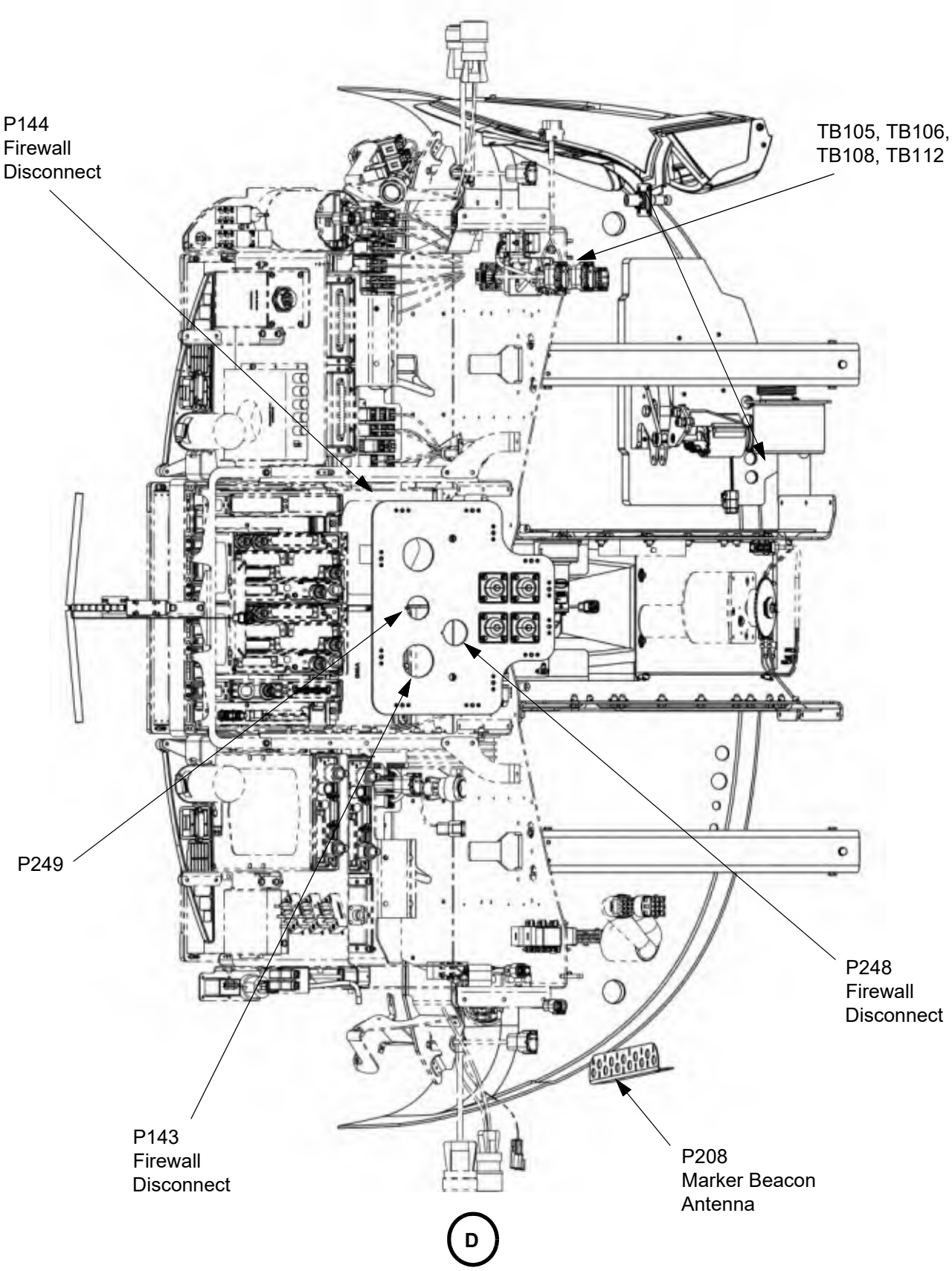

B. Yoke Harnesses

(1) Removal

(a) Set the BATT 1 and BATT 2 switches to OFF.

(b) Disconnect external electrical power from the airplane (refer to Chapter 24-40).

(c) Remove the cowling (refer to Chapter 71-10).

(d) Disconnect the batteries by disconnecting the negative battery cables first then the positive battery cables.

WARNING: To reduce the possibility of personal injury and equipment damage, disconnect the negative battery cable before disconnecting the positive battery cable.

(e) Insulate the battery terminals.

(f) Remove the passenger cabin carpet and floor, as required. Refer to Chapter 25-20 and 53-20.

(g) Tag the connectors.

(h) Cut cable ties.

(i) Remove clamps.

(j) Remove the electrical harness from the airplane.

(2) Installation

(a) Make connections to the tagged connectors.

(b) Secure the harness using cable ties and clamps.

(c) Connect the batteries starting with the positive battery cables then the negative cables.

WARNING: To reduce the possibility of personal injury and equipment damage, connect the positive battery cable before connecting the negative battery cable.

(d) Do required operational checks.

(e) Install the passenger cabin carpet and floor, as required. Refer to Chapter 25-20 and 53-20.

(f) Install the cowling (refer to Chapter 71-10).

Figure 39-80.2: Yoke Harness (Sheet 1 of 3)

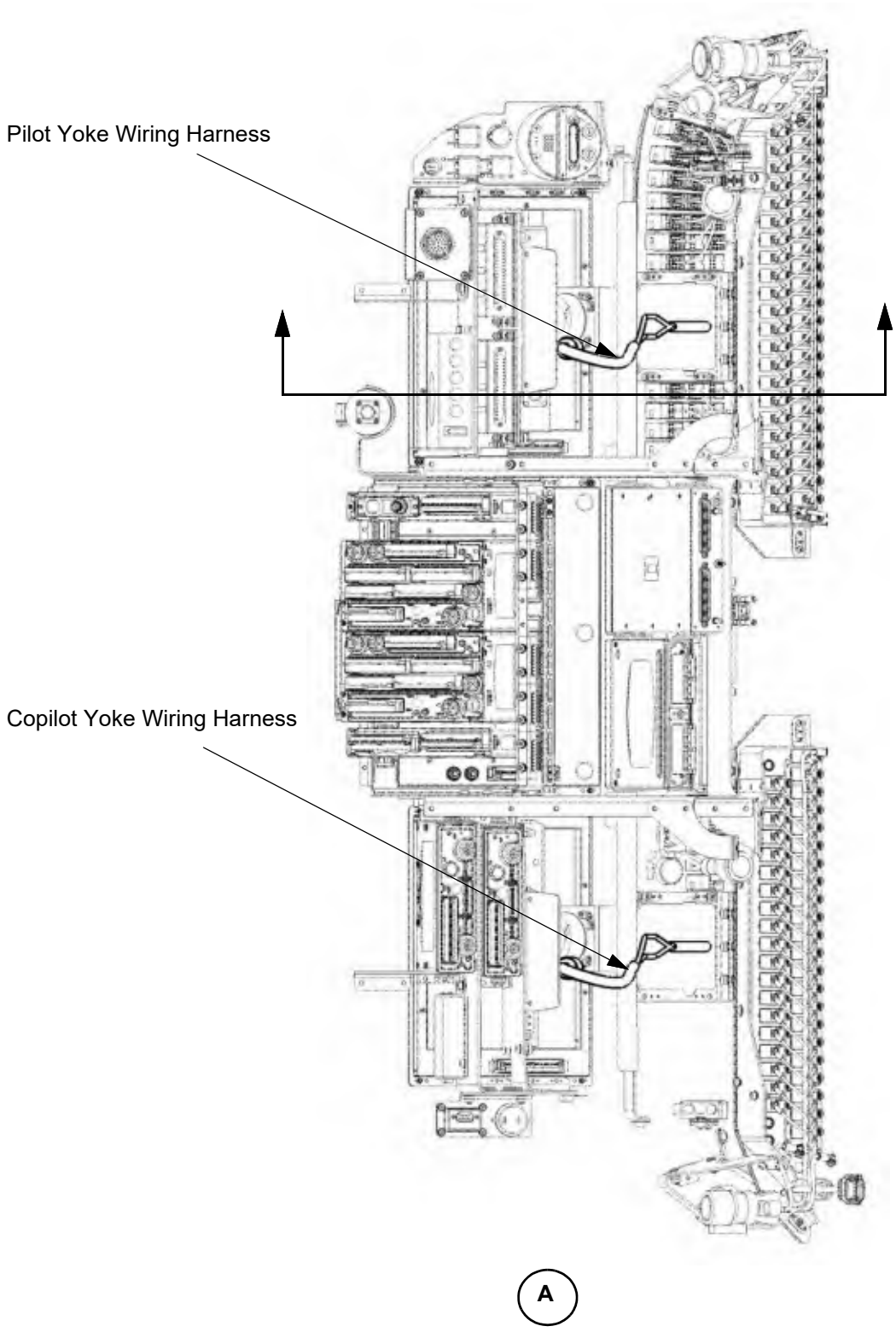

Figure 39-80.2: Yoke Harness (Sheet 2 of 3)

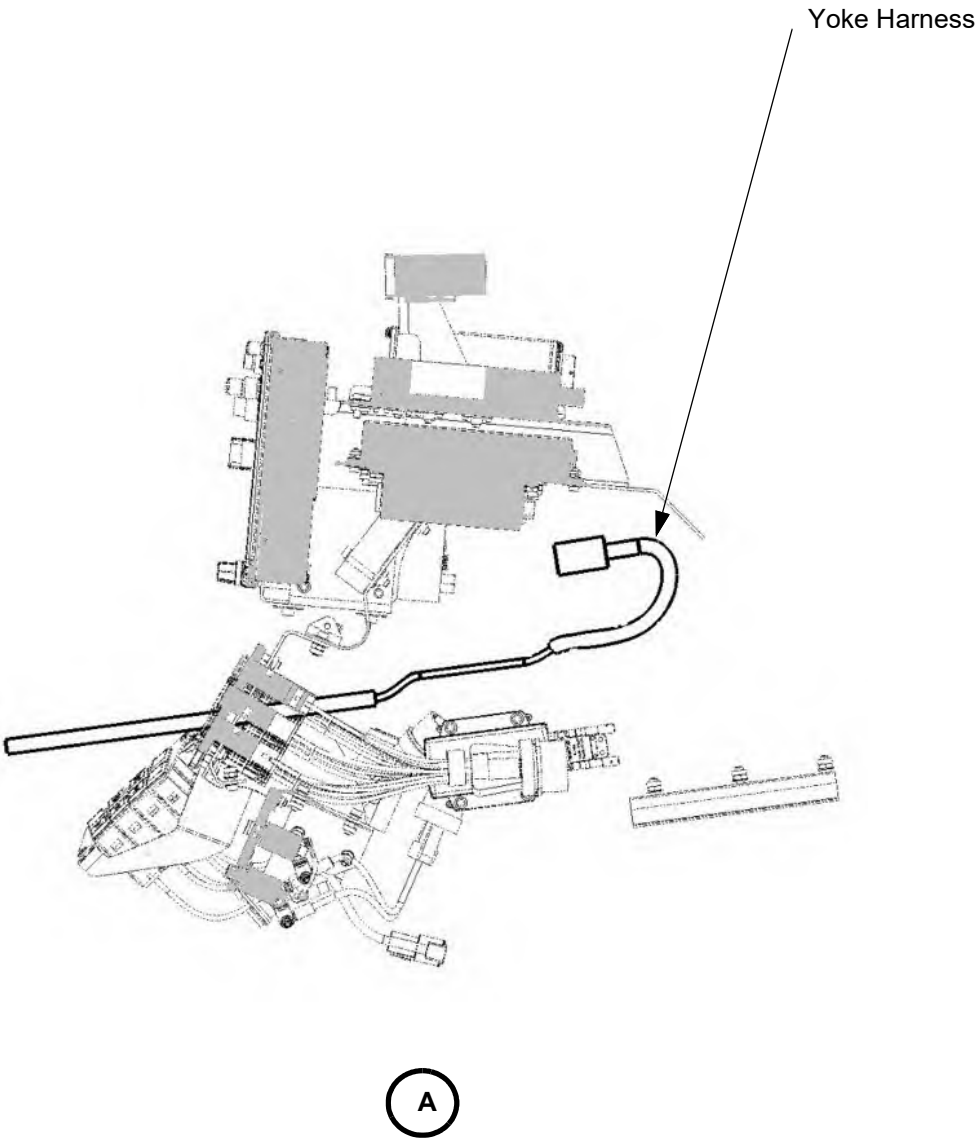

Figure 39-80.2: Yoke Harness (Sheet 3 of 3)

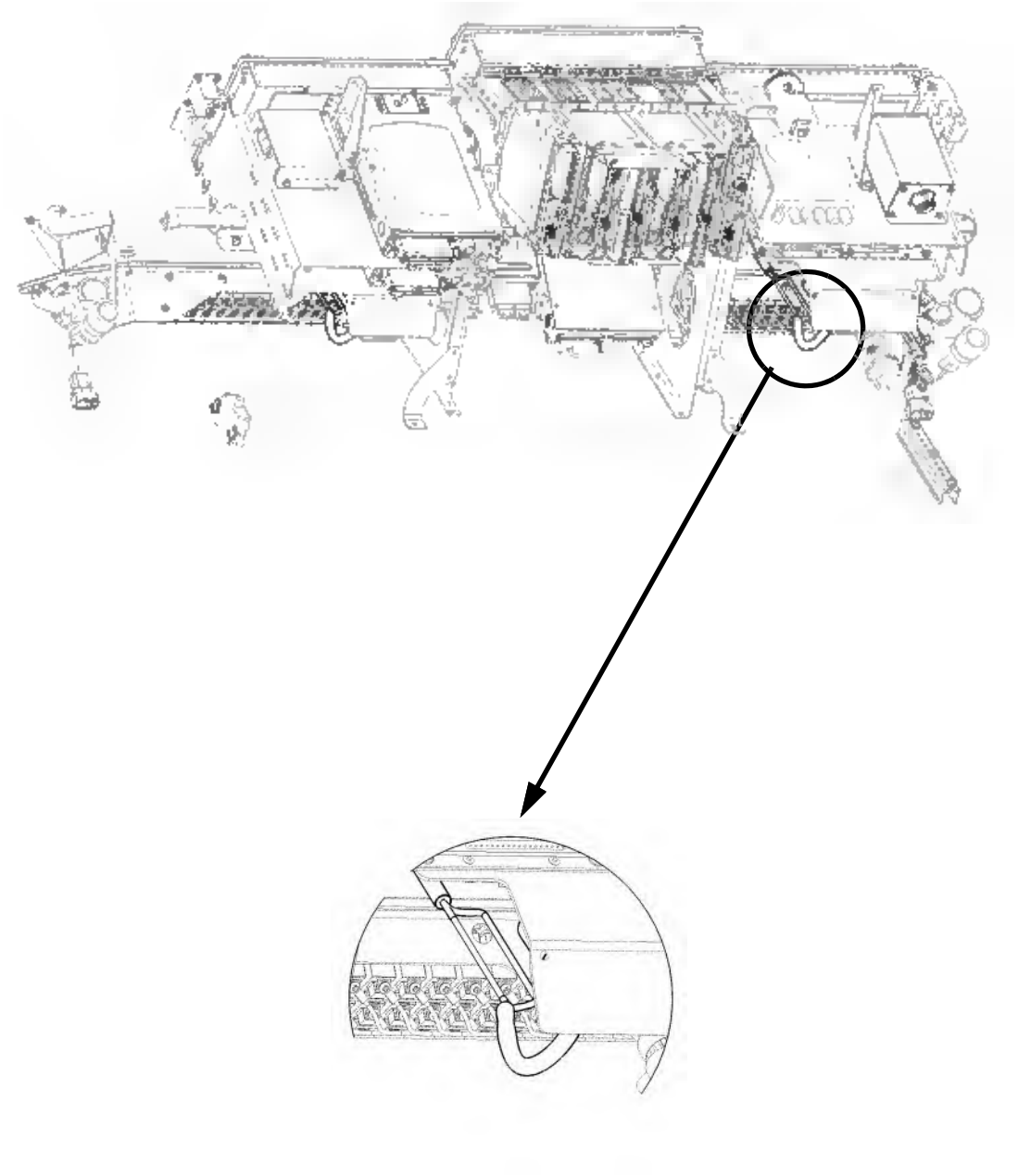

Pilot yoke harness shown. The copilot yoke harness is similar.

CHAPTER
51

Standard Practices and Structures - General

This Page Intentionally Left Blank

List of Effective Pages

Chapter/Section	Page Number	Effective Date
51-Title	Page 1	02 Jan 2020
51-Title	Page 2	02 Jan 2020
51-LOEP	Page 1	08 Sep 2026
51-LOEP	Page 2	08 Sep 2026
51-TOC	Page 1	08 Sep 2026
51-TOC	Page 2	02 Jan 2020
51-00	Page 1	13 Apr 2020
51-00	Page 2	02 Jan 2020
51-10	Page 1	02 Jan 2020
51-10	Page 2	02 Jan 2020
51-20	Page 1	14 Jul 2021
51-20	Page 2	02 Jan 2020
51-20	Page 3	13 Apr 2020
51-20	Page 4	19 Jan 2023
51-20	Page 5	02 Jan 2020
51-20	Page 6	02 Jan 2020
51-20	Page 7	02 Jan 2020
51-20	Page 8	02 Jan 2020
51-20	Page 9	02 Jan 2020
51-20	Page 10	08 Sep 2026
51-20	Page 11	08 Sep 2026
51-20	Page 12	08 Sep 2026
51-20	Page 13	08 Sep 2026
51-20	Page 14	08 Sep 2026
51-20	Page 15	08 Sep 2026
51-20	Page 16	08 Sep 2026
51-20	Page 17	08 Sep 2026
51-20	Page 18	08 Sep 2026
51-20	Page 19	08 Sep 2026
51-20	Page 20	08 Sep 2026
51-20	Page 21	08 Sep 2026
51-20	Page 22	08 Sep 2026
51-20	Page 23	08 Sep 2026
51-20	Page 24	08 Sep 2026
51-20	Page 25	08 Sep 2026
51-20	Page 26	08 Sep 2026
51-20	Page 27	08 Sep 2026
51-20	Page 28	08 Sep 2026

51-40 ..... Page 1 ..... 02 Jan 2020
51-40 ..... Page 2 ..... 02 Jan 2020
51-40 ..... Page 3 ..... 02 Jan 2020
51-40 ..... Page 4 ..... 02 Jan 2020
51-40 ..... Page 5 ..... 02 Jan 2020
51-40 ..... Page 6 ..... 02 Jan 2020
51-40 ..... Page 7 ..... 20 Oct 2023
51-40 ..... Page 8 ..... 02 Jan 2020
51-40 ..... Page 9 ..... 02 Jan 2020
51-40 ..... Page 10 ..... 02 Jan 2020
51-40 ..... Page 11 ..... 02 Jan 2020
51-40 ..... Page 12 ..... 02 Jan 2020
51-40 ..... Page 13 ..... 02 Jan 2020
51-40 ..... Page 14 ..... 02 Jan 2020
51-40 ..... Page 15 ..... 02 Jan 2020
51-40 ..... Page 16 ..... 02 Jan 2020
51-40 ..... Page 17 ..... 02 Jan 2020
51-40 ..... Page 18 ..... 02 Jan 2020
51-40 ..... Page 19 ..... 02 Jan 2020
51-40 ..... Page 20 ..... 02 Jan 2020
51-40 ..... Page 21 ..... 02 Jan 2020
51-40 ..... Page 22 ..... 02 Jan 2020

51-70 ..... Page 1 ..... 02 Jan 2020
51-70 ..... Page 2 ..... 02 Jan 2020

Table of Contents

List of Effective Pages ..... 51-LOEP / Page 1
Table of Contents ..... 51-TOC / Page1

Paragraph **Page Number**

General
1. General ..... 51-00 / Page 1
2. Definitions ..... 51-00 / Page 1

Composite Structure Damage Assessment
1. General ..... 51-10 / Page 1
2. Maintenance Practices ..... 51-10 / Page 1
   A. Damage Area Determination ..... 51-10 / Page 1
   B. Damage ..... 51-10 / Page 2

Processes
1. General ..... 51-20 / Page 1
2. Maintenance Practices ..... 51-20 / Page 1
   A. Composite Repair ..... 51-20 / Page 1
   B. Exterior Paint ..... 51-20 / Page 1
   C. Interior Paint ..... 51-20 / Page 12
   D. Body Filler Repairs ..... 51-20 / Page 19
   E. Non-Structural Bonding ..... 51-20 / Page 22
   F. Protective Tape Installation ..... 51-20 / Page 23
   G. Radome Boot Installation ..... 51-20 / Page 24
   H. Wing Bond Inspection ..... 51-20 / Page 25

Fasteners
1. General ..... 51-40 / Page 1
2. Maintenance Practices ..... 51-40 / Page 1
   A. Corrosion Protection ..... 51-40 / Page 1
   B. Bolts, Screws, Nuts, and Washers ..... 51-40 / Page 1
   C. Inserts ..... 51-40 / Page 2
   D. Nutplates ..... 51-40 / Page 4
   E. Click Bond® and Rotaloc® Fasteners ..... 51-40 / Page 7
   F. Rivnuts ..... 51-40 / Page 8
   G. Rivets ..... 51-40 / Page 10
   H. Self-Locking Elements ..... 51-40 / Page 14
   I. Self-Clinching Fasteners ..... 51-40 / Page 15
   J. Tapped Holes ..... 51-40 / Page 17
   K. Bearing Installation and Retention ..... 51-40 / Page 18
   L. Roll Pin ..... 51-40 / Page 21
   M. Clamps ..... 51-40 / Page 21

Repairs

1. Description ..... 51-70 / Page 1
2. Maintenance Practices ..... 51-70 / Page 1

STANDARD PRACTICES AND STRUCTURES - GENERAL

1. General

Repairable structural and non-structural components of the airplane have not been defined at this time. Should the airplane suffer damage contact Epic Aircraft, LLC.

2. Definitions

(1) Core	The middle component of a laminated sandwich structure. This component is usually foam or honeycomb.
(2) Carbon Cloth	Fabric made using bundles of fine carbon filaments woven into a sheet.
(3) Carbon Fiber	Strands of fine carbon filament.
(4) Delamination	Separation of plies of a laminate or separation of laminate from the core of a sandwich structure.
(5) Disbond	Failure of adhesion or separation at the bonded interface of two parts.
(6) Filler	An inert material added to another material to alter its density and physical, mechanical, thermal, and electrical properties.
(7) Glass Cloth	Fabric made using bundles of fine glass filaments woven into a sheet.
(8) Glass Fiber	Strands of fine spun glass.
(9) Initial Cure	Minimum cure time dependent on pressure, time, and temperature for a material to develop handling strength.
(10) Laminate	To combine sheets of material in layers, usually using heat, pressure, and adhesive.
(11) Layup	Sheets of carbon or glass fabric laminated together using resin.
(12) Peel Ply	A thin sheet of plastic material applied over installed wet layup to provide a uniform contaminant free surface. The peel ply is removed after the wet layup has cured.
(13) Ply	A single layer of carbon or glass cloth when used in a laminate.
(14) Post Cure	Amount of time after initial cure required to develop full strength. Post cure is usually done at elevated temperature and without pressure.
(15) Release	A layer of material to which curing resin will not adhere. Usually a layer of clear plastic adhesive tape and/or wax.

This Page Intentionally Left Blank

COMPOSITE STRUCTURE DAMAGE ASSESSMENT

1. General

Damage due to impact is the most common type of damage to composite structures and the extent of the damage will usually be visibly evident. As composite material structures are often made of skins sandwiching an inner core, always assume the core may be damaged if the skin is damaged. Hidden damage may be detected using tap testing. Contact Epic Aircraft, LLC before beginning any repair work.

2. Maintenance Practices

A. Damage Area Determination

(1) Visual Inspection

When visually inspecting the airplane for damage look for cracks in the paint, dimples, dents, creases, puckering, raised areas, depressions, stains, or any other indication that is unusual or looks out of place.

Useful tools for visual inspection are:

(a) Inspection Mirror

(b) Flashlight

(c) Borescope

Dimples or dents are a definite sign of damage but do not readily indicate the extent of the damage. Further investigation of these area using tap testing is required. Visual inspection of the back of damaged areas, if possible, is helpful in determining the extent of the damage. If broken fibers are visible the area is definitely damaged and needs repair.

Raised, depressed, or puckered areas are an indication that there may be separation between plies of a laminate (delamination) or between the skins and the core of a component (disbonding). Touching and gently pressing on these areas can often confirm damage because they will be soft or have movement between the layers of the structure.

(2) Tap Testing

Tap testing is done using a small blunt metallic object (e.g. coin, tap hammer) and tapping it along the surface of a composite part while listening for any changes in the tone of the tap. Because of the tone change, it is important to use a consistent technique while tapping. By tapping the part several times every few inches in a quick continuous motion, any tone changes will be very noticeable. The tone of the tap will vary from a high pitch sound to a lower pitch sound depending on the number of plies, core location, and the stiffness of the item being tested. For example, if testing the leading edge of a wing skin, because of the curvature, the tap will have a high pitch sound. Meanwhile testing the core to skin bond near the center will have a duller sound.

If a dull thud sound with no response is heard, this could be an indication of a delamina-

tion either between the plies themselves or of a core to skin disbond on an individual part. If a spot has been found, continue tapping in the surrounding area moving away from the suspected area then back to it from different directions. Using this technique will ultimately provide a map of the size of the questionable area(s).

Composite parts that have no core only need to be tapped from one side depending on the thickness of the part. Cored parts require tap testing on both sides because one side may be acceptable while the other may not.

Tap test in a hangar or location where it is quiet with little noise.

B. Damage

If any carbon or fiberglass composite parts, structures, or materials on the airplane are damaged contact Epic Aircraft, LLC for instructions. Do not attempt any repairs to the above mentioned, parts, structures, or materials without express written approval from Epic Aircraft, LLC.

PROCESSES

1. General

This chapter gives information and procedures for composite material and exterior paint repairs.

A repair technician doing composite repair on this airplane must be thoroughly familiar and experienced with the procedures and processes involved. Contact Epic Aircraft, LLC before beginning any repair work.

2. Maintenance Practices

A. Composite Repair

If any carbon or fiberglass composite parts, structures, or materials on the airplane are damaged contact Epic Aircraft, LLC for instructions. Do not attempt any repairs without express written approval from Epic Aircraft, LLC.

B. Exterior Paint

(1) Paint Thickness Limitations

Dry paint thickness is measured from the outermost layer of paint to the first layer of carbon fiber, fiberglass, metal, or expanded copper foil, whichever is encountered first. Paint thickness may be determined using an eddy current depth gauge or paint gauge. Permitted paint thicknesses are defined by zones on the airplane, as shown below.

Maximum Paint Thickness

- Zone 1A - 8/1000 inch
- Zone 1B - 10/1000 inch
- Zone 2 - 15/1000 inch
- Zone 3 - Unlimited

Variances in paint thickness are permitted as long as combined discontinuities do not exceed 15% of the total zone and any singular discontinuity does not exceed 150% of the maximum paint thickness within a 6 inch radius. Discontinuous variations (e.g. text, logos, color overlaps, etc.) may exceed the 6-inch radius. At a bonding seam or where a laminate repair has been made, a paint discontinuity may exceed 150% of maximum paint thickness along the entire length of the seam and up to 4 inches perpendicular to the seam.

Figure 51-20.1: Paint Thickness Zones

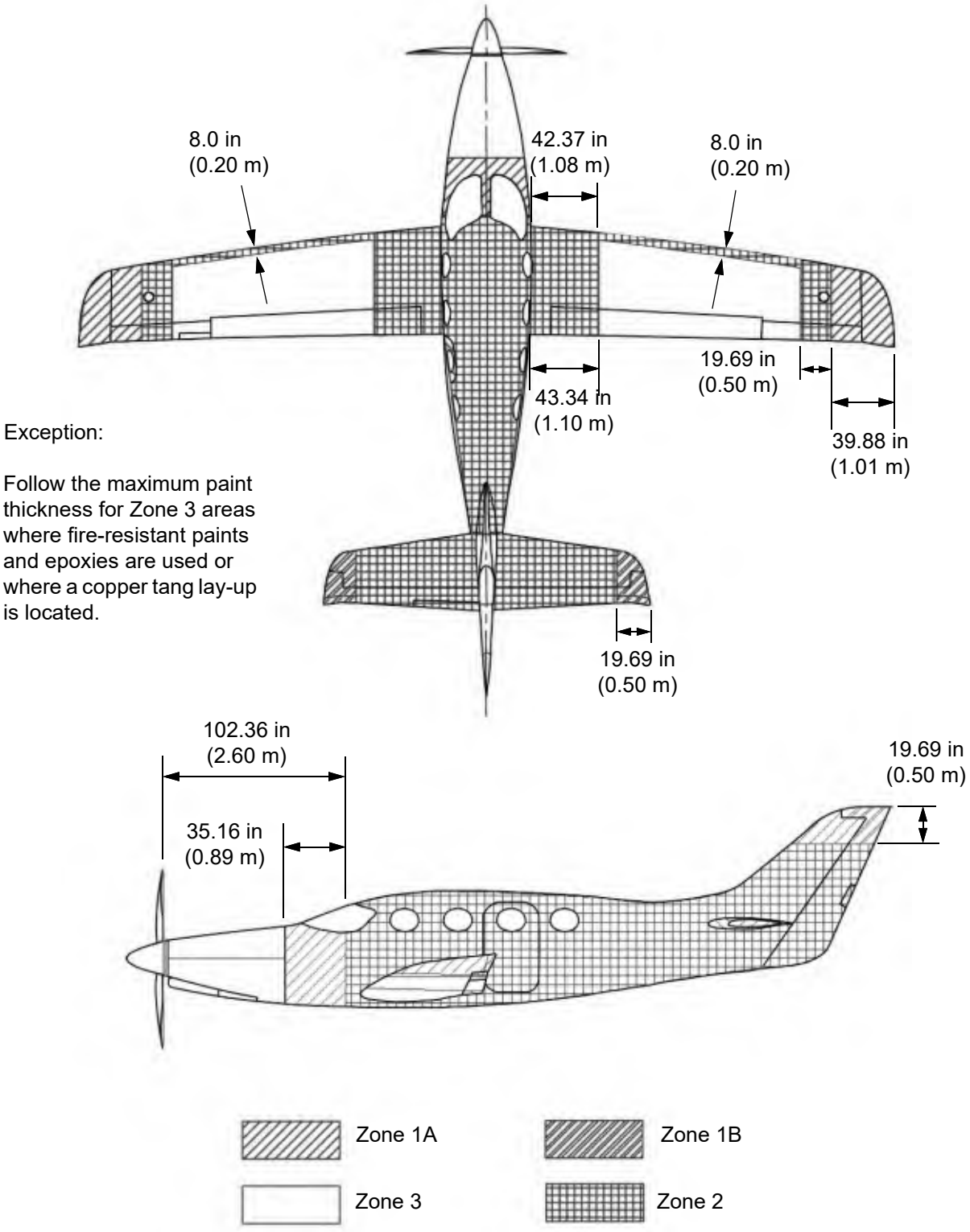

(2) Color Limitations

Paint color reflectivity determines on which areas of the airplane a particular paint can be applied. Reflectivity is an indication of the amount of solar energy that is reflected away from the paint.

(a) Fuselage and Empennage

(i) Base Colors - The reflectivity of the paint must be no less than 29% for all areas of the fuselage, doors, cowling, vertical stabilizer, rudder, horizontal stabilizer, and elevator. Fairings from the fuselage to the wing and from the vertical stabilizer to the horizontal stabilizer are considered part of the fuselage.

(ii) Accent Stripes - Accent stripes that cover less than 10% of the total area of a section do not have a reflectivity restriction. If the accent stripes cover more than 10% of the area, the color selected must have a reflectivity of no less than 29%.

(b) Wing (except removable wing tips)

(i) Base Colors - For all areas of the wing including the flaps and ailerons, the reflectivity of the paint must be no less than 55%.

(ii) Accent Stripes - Accent stripes that cover less than 10% of the total area of the wing must have a reflectivity of no less than 29%. If the accent stripes cover more than 10% of the area, the color selected must have a reflectivity of no less than 55%.

(c) Removable Wing Tips - The removable wing tips may be painted with the same color and criteria as the fuselage. The wing tips must have a reflectivity of no less than 15%.

(3) Approved Paint Colors

The paint colors listed below apply to DuPont Imron AF700 solid and pearl colors, these color codes are interchangeable between AF700, AF400, and AF3500 paints.

Table 51-20.1: Paint Colors

Color Code	Reflectivity %	Description
Solid Colors		
4192016	86.6	Epic White
837071	34	Gulfstream Silver
765400	43	Gray
765407	63	Whisper Gray

765268	5	Gloss Black
Pearlescent Colors		
814502	8	Ming Blue
814874	19	Blue #4
814875	39	Sapphire Blue
815826	5	Black
818101	15	Steel Blue
Metallic Colors		
494247	50	Silver
748854	17	Gray
808401	54	Bright Silver Sparkle

Note: This is just a sample list. Contact Epic Aircraft for a full list of color options.

Table 51-20.2: Approved Materials

Manufacturer	Part Number	Description	Notes
DuPont/Axalta	13238S	Pre-Treatment	For use with bare metals before primer.
BASF	Limco 203	Surface Cleaner	Universal cleaner and degreaser.
BASF	R-M 909	Surface Cleaner	Universal water-based cleaner.
Procter & Gamble	Dawn	Surface Cleaner	Mild degreaser/ cleaner mixed with water for use.
DuPont/Axalta	Corlar 13550S	Primer	Strontium-chromate based epoxy. Meets MIL-PRF-23377J, Type I, Class 2. For use on metal surfaces.
DuPont/Axalta	Corlar 13570S	Primer	For use on composite surfaces.
DuPont/Axalta	Ecolar 13580S	Primer	Epoxy Primer, High Build, meets MIL-PRF-23377. For use on metal surfaces.
DuPont/Axalta	1220S	Primer/Surfacer	For use on composite surfaces, can be used on metal surfaces as surfacer after primer.
DuPont/Axalta	Corlar 13560S	Primer/Surfacer	For use on composite surfaces, can be used on metal surfaces as surfacer after primer.
DuPont/Axalta	URO 13520	Primer/Surfacer	For use on composite surfaces.
Evercoat	RAGE Xtreme	Body Filler	

USC	Elite 21325	Body Filler	
Evercoat	Metal Glaze 416	Body Filler	Polyester-Based
Evercoat	Glaze Coat 417	Body Filler	Polyester-Based
Loctite/Henkel	EA 960F Aero	Body Filler	Epoxy-Based; also known as Hysol EA 960F
Poly Fiber	Super Fil	Body Filler	Epoxy-Based
DuPont/Axalta	Imron AF700	Basecoat	ES Quality
DuPont/Axalta	Imron AF3500	Topcoat	EJ Quality
DuPont/Axalta	Imron AF400	Topcoat	EP Quality
DuPont/Axalta	Imron AF740	Clearcoat	For use with Imron AF700 and Imron AF400.
Flame Control Coatings	No. 46081	Fire-Resistant Epoxy	Fire Resistant Epoxy Coating, meets Mil-C-46081A
DuPont/Axalta	13100S	Activator	Urethane Activator
DuPont/Axalta	13110S	Activator	Urethane Activator
DuPont/Axalta	193S	Activator	Urethane Activator for 1220S.
DuPont/Axalta	194S	Activator	Urethane Activator for 1220S.
DuPont/Axalta	13150S	Epoxy Activator	For use with Corlar 13550S and Corlar 13570S
DuPont/Axalta	13160S	Epoxy Activator	For use with Corlar 13560S
DuPont/Axalta	13180S	Epoxy Activator	For use with Eco-lar 13580S
DuPont/Axalta	13138S	Epoxy Activator	For use with 13238S
DuPont/Axalta	13813S	Anti-Crater Addi-tive	

DuPont/Axalta	13814S	Anti-Crater Additive	
DuPont/Axalta	13801S	Accelerator	
DuPont/Axalta	13803S	Accelerator	
DuPont/Axalta	13808S	Accelerator	
DuPont/Axalta	13809S	Accelerator	
DuPont/Axalta	389S	Accelerator	For use with 1220S
DuPont/Axalta	8989S	Accelerator	For use with 1220S
DuPont/Axalta	13775S	Reducer	VOC Exempt Reducer, Medium
DuPont/Axalta	13765S	Reducer	VOC Exempt Reducer, Fast
DuPont/Axalta	13755S	Reducer	VOC Exempt Reducer, Slow
DuPont/Axalta	13756S	Reducer	VOC Exempt Reducer
DuPont/Axalta	Imron 13865S	Pot Life Extender	Fast
DuPont/Axalta	Imron 13875S	Pot Life Extender	Medium
DuPont/Axalta	Imron 13885S	Pot Life Extender	Slow
DuPont/Axalta	Imron 13895S	Pot Life Extender	Very Slow
Open Source	Isopropyl Alcohol	Cleaning Agent	99% Anhydrous
DuPont/Axalta	Sontara	Cleaning Wipes	PS-3909S-WP, PS-3970S, PS3975S-WP, PS3990S
Open Source	Tack Cloth	Tack Cloth	DuPont/Axalta Sontara E-4140, E-4141, E-4586, or any cloth that leaves a residue free surface.
BGF Industries	Fiberglass	120 Style Fiberglass, 504 (Volan) Finish	Meets SAE-AMS-C-9084, Type III, Class 2
Hexcel Corporation	Carbon Fabric	Plain Weave, 3K	For use in secondary layup only.

Rhino Lining Corporation	Rhino 1307-LV	Epoxy Resin	For use with fiberglass layup or body filler.
Rhino Lining Corporation	Rhino 3176	Hardener for Rhino 1307-LV	For use with fiberglass layup or body filler.
3M	Micro	K20 Glass Bubbles	For use with Rhino 1307-LV and Rhino 3176 for body filling.
DuPont/Axalta	222S	Adhesion Promoter	For use as adhesion promoter.
Klean Strip/Bulldog	GTPO123 QTPO123	Adhesion Promoter	for use as adhesion promoter.
3M	8561	Polyurethane Protective Tape	For use in areas where chafe or chip protection is needed.
PPG Aerospace	Korotherm Protective Coating	Thermal Barrier Coating	For use in areas that require thermal protection.
PPG Aerospace	DeSoto 519X303	High Temperature Epoxy Primer	For use in high temperature areas.
PPG Aerospace	CA 8620G	Filler/Surfacer	Chrome-free urethane, gray
PPG Aerospace	CA 8620TG	Filler/Surfacer	Chrome-free, white, trowelable filler / surfacer
PPG Aerospace	CA 7502	Primer	Chrome-free primer
PPG Aerospace	CA 7502W	Primer	Chrome-free primer
PPG Aerospace	DesoGel EAP-9	Conversion Coating / Adhesion Promoter	For use with aluminum surfaces only
PPG Aerospace	CA 8800	Topcoat	Single Stage Topcoat

PPG Aerospace	CA 8800SR	Topcoat	SR colors shall have a basecoat layer of CA 8800/ I1447 Epic White
PPG Aerospace	CA 8800Cxx1	Thinner	For use with CA 8800 and CA 8800 SR
PPG Aerospace	CA 8800Z	Activator	For use with CA 8800 and CA 8800 SR
PPG Aerospace	CA 8800/B900	Clearcoat	For use with CA 8800 series top-coats
PPG Aerospace	CA 8800Z	Activator	For use with CA 8800/B900
PPG Aerospace	CA 8800F2	Thinner	For use with CA 8800/B900
PPG Aerospace	CA 9007 series	Basecoat	
PPG Aerospace	CA 9007SR	Solar Reflective Basecoat	SR colors shall have a base coat layer of CA 9007/ I1447 Epic White
PPG Aerospace	CA 9007B	Activator	For use with CA 9007 and CA 9007SR
PPG Aerospace	CA 9007C3	Thinner	For use with CA 9007 and CA 9007SR
PPG Aerospace	CA 9007/B900	Clearcoat	For use with CA 9007 and CA 9007SR
PPG Aerospace	CA 9007Z	Activator	For use with CA 9007/B900
PPG Aerospace	CA 9007F4	Thinner	For use with CA 9007/B900

PPG Aerospace	CA 8000/900B	Clearcoat	For use with small areas that require touch-up, edge sealing, and/ordecal sealing. Brushable application
PPG Aerospace	CA 8000B	Activator	For use with CA 8000/900B
PPG Aerospace	DeSoto CN20		Solvent blend cleaner
PPG Aerospace	DeSoto CN44		Solvent/alcohol blend cleaner
PPG Aerospace	Desoclean 45		Solvent Cleaner
PPG Aerospace	Desoclean 110	Claner	Solvent cleaner, non-aggressive
PPG Aerospace	Desoclean 120	Cleaner	Substrate Cleaner and Degreaser. Non-aggressive cleaner, especially effective against silicone contamination and mold release agents.

(a) Metallic Pre-Treatments

Use a pre-treatment on bare metallic substrates to provide good adhesion between the base material and the paint system while providing protection from corrosion. Pre-treatment is required on metallic parts such as bare steel or aluminum if they don't have a corrosion resistant coating. Pre-treating metallic substrates that are corrosion resistant, such as anodized aluminum, bare stainless steel, or nickel plated steel, is not recommended.

(b) Body Fillers

Use body fillers wherever a large gap, joints, major surface discontinuities, or other large area imperfections require filling to create a smooth surface where a surfacer alone is not practical. A slurry of resin and micro mixed to a toothpaste-like consistency may be used.

Note: Any filler used must be included as part of the total thickness limitation of painted surfaces. If the thickness limit is exceeded with the use of body filler, a secondary layup and lightning strike repair must be done.

(c) Protective Tape
Protective tape may be used as specified in 51-20.2.E.

(d) Adhesion Promoters
Adhesion promoters may be used when painting plastic parts. Follow manufacturer's instructions for proper application and use.

(4) Ambient Conditions and Setup

Apply and cure all materials according the material manufacturer's instructions. Paint and associated materials must be cured between 50 ^{o}F and 150 ^{o}F and remain at least 5° above the dew point at all times during curing. When applying and curing, relative humidity must not exceed 90%.

(a) Composite Surface Preparation
Temporary fastener holes, such as "cleko" holes, or tooling pin dimples may be filled in with a Loctite™ EA 9360 Aero or Loctite™ EA 9394 Aero, Alternatively, a slurry mixture using body fillers may be used.

Lightly sand the surface of filled areas using 80 grit, or finer, sandpaper. After sanding blow off any dust using filtered air or wash using water or cleaning solution. Let the surface dry. Immediately before applying primer wipe down the surface using isopropyl alcohol and a clean lint-free cloth, a DuPont/Axalta pre-saturated wipe, or tack cloth.

(b) Metallic Surface Preparation

(i) Bare Steel and Aluminum - Lightly sand bare steel and aluminum using 320 grit, or finer, sandpaper then wash the surface using water or cleaning solution. Let the surface dry. Apply pre-treatment.

(ii) Anodized, Zinc Coated, Nickel Plated, Chrome Plated, or Otherwise Protected Metal - Wash the surface using cleaning solution, isopropyl alcohol and a clean lint-free cloth, or a DuPont/Axalta pre-saturated wipe. Let the surface dry. Apply primer.

C. Interior Paint

The following processes are typical for painting interior parts. Contact Epic Aircraft for correct paint style for the part to be painted. Refer to tables 51-20.3 - 51-20.7 for approved materials.

(1) Paint Prep

(a) Cleaning

- Parts that are to be painted shall be cleaned and degreased thoroughly. Isopropyl alcohol and Limco 203 Wax and Grease Remover are recommended.
- Surfaces shall be prepared by sanding using 80-150 grit sandpaper, by hand sanding or using a DA Sander, until surface gloss is removed.
- Solvent-wash parts with a lint free cloth saturated with solvent. Thoroughly wet the bonding surface with solvent then immediately wipe with a clean dry lint free cloth using a single stroke motion while rolling the wipe away from the surface. After each wipe, turn the drying cloth to a clean surface. Do not reuse a contaminated drying cloth surface. Allow the solvents to dry for a minimum of 5 minutes.

(2) Painting Processes

Note: Interior parts shall be painted using only approved materials specified in the table in this section. Interior part colors vary based on the aircraft color scheme.

(a) Composite and Plastic Parts

(i) Clean parts per (1)(a).
(ii) Inspect parts for defects, perform bodywork as necessary using an approved FR Filler.
(iii) Sand using 80-150 grit sandpaper.

Note: If defects persist, repeat bodywork as necessary.

(iv) Clean surfaces per (1)(a).
(v) Prime parts using an approved primer. Spray part with one coat sprayed horizontally, and a subsequent coat sprayed vertically. Repeat twice to achieve 2 cross coats.
(vi) Inspect part for defects. Rework defects as necessary.
(vii) Prior to reworking defects, surfaces shall be prepped using 120-220 grit sandpaper and cleaned per (1)(a). Fill defect, then spray part with guide-coat and sand with 120-220 grit sandpaper. Sand surfaces until all low spots or defects are filled.
(viii) Clean part per (1)(a), then repeat the priming process.
(ix) Inspect parts for defects. Minor defects shall be skimmed using an approved FR Filler.

(x) Apply guide coat, then sand primer with 600 grit sandpaper until all low spots or defects are filled.
(xi) Clean surfaces per (1)(a).
(xii) Deep scratches on surfaces shall be reduced using 800 grit sandpaper.
(xiii) Clean surfaces per (1)(a), then lightly wipe part using a fresh clean tack cloth.
(xiv) Paint in accordance with paint manufacturer's instructions.

(b) Urethane Parts

(i) Parts shall be cleaned per (1)(a).
(ii) Skim defects or pinholes with an approved FR Filler.
(iii) Apply guide coat and sand using 600 grit sandpaper until all low spots or defects are filled.
(iv) Remove abrading dust and clean part per (1)(a).
(v) Ensure all guide coat has been removed. Deep scratches on surfaces shall be reduced using 800 grit sandpaper.
(vi) Parts shall be primed using an approved primer. Spray part with one coat sprayed horizontally, and a subsequent coat sprayed vertically. Repeat twice to achieve 2 cross coats.
(vii) Clean surfaces per (1)(a), then lightly wipe part using a fresh clean tack cloth.
(viii) Apply guide coat, then sand primer with 600 grit sandpaper until all low spots or defects are filled.
(ix) Clean surfaces per (1)(a).
(x) Deep scratches on surfaces shall be reduced using 800 grit sandpaper.
(xi) Clean surfaces per (1)(a), then lightly wipe part using a fresh clean tack cloth.
(xii) Paint in accordance with paint manufacturer's instructions.

Note: If painting a urethane part that is already primed, use process (2)(a) and omit priming step (v).

Table 51-20.3: Approved Materials

Manufacturer	Material	Description	Part Number
Axalta	Activator	Mid Temp	LE3075S
		Urethane	13100S
	Basecoat	Chromabase (Black)	99K
	Reducer	Low Temp	7160S
		Mid Temp	7175S
		High Temp	7185S
		Very High Temp	7195S
	Sealer	Plas-Stick	2340S
		LE 2K	LE3040S
	Primer	Urethane	1220S
Axson	FR Filler	Micro-Ultra 15-3	06070
	Hardener	BPO (Paste) Cream	07630
BASF	Activator	Rapid	DH42
		Normal	DH46
	Basecoat	Clear	DC5335
		Diamont, Black	D403
	Clearcoat	Glamour	UNO FC804
	Flattener	Limco	203
	Flattener	Special	SM09
	Reducer	Spot & Panel	UR30
		Low Temp	UR40
		Mid Temp	UR50
		High Temp	UR60
		Very High Temp	UR70
		Reducer	UR80
		Reducer	UR90
PPG	Activator	Slow HS Hardener	DCH8239
	Basecoat	Deltron 2000	*See Table 51-20.6*
	Clearcoat	Matte	DC8115
		Semi-Gloss	DC8117
	Reducer	Cool Temp	DT860
		Fast Thinner	DT870
		Medium Thinner	DT1575
		Slow Thinner	DT1585
		Warm Temp	DT885
		Hot Temp	DT895

PPG	Filler / Surfacer	Chrome-free urethane	CA 8620G
		Chrome-free trowelable	CA 8620TG
	Primer	Chrome-free primer	CA 7502
			CA 7502W
	Topcoat	Topcoat	CA 8800 series
		SR Topcoat	CA 8800SR series
	Topcoat / Clearcoat	Topcoat / Clearcoat	CA 9007 series
		SR Topcoat / Clearcoat	CA 9007SR series
	Clearcoat	Use with CA 8800 series	CA 8800/B900
		Use with CA 9007 series	CA 9007/B900
		Touch-up, edge sealing, decal sealing: brush application	CA 8000/B900B

Table 51-20.4: Paint Styles

Paint Style*	Description	Process Layers	Part Number	Substitutes
Px	*See Table 51-20.5*	Sealer	LE3040S	-
		Sealer Activator	LE3075S	-
		Basecoat	99K	-
		Basecoat Reducer	7160S	7175S, 7185S
		Clearcoat	DC8115	-
		Clear Activator	DCH8239	-
		Clear Reducer	DT1575	DT1585, DT855, DT895
Py	*See Table 51-20.6*	Sealer	LE3040S	-
		Sealer Activator	LE3075S	-
		Basecoat	*See Table 51-20.6*	-
		Basecoat Reducer	DT860	DT870, DT885, DT895, DT898
		Clearcoat	DC8115 & DC8117	-
		Clear Activator	DCH8239	-
		Clear Reducer	DT1575	DT1585, DT885, DT895
P7	Matte Clearcoat	Clearcoat	DC8115	-
P8	Ultra Flat Black	Basecoat	D403	
		Reducer	UR60	UR70, UR70, UR90
		Hardener	DH42	-
		Flattener	SM09	-

Pv	PPG Multi-stage Exterior Paint System	Primer	CA7502	CA7502W
		Filler/Surfacer	CA8620G	CA8620TG
		Surfacer Activator	CA8000B	
		Surfacer Thinner	CA8000C	CA8000C1, CA8000C2
		CA9007 Base	CA9007/XXXX CA9007/SRXXXX	*Contact Epic Aircraft for approved colors.*
		CA9007 Activator	CA9007B	-
		CA9007 Reducers	CA9007C	CA9007C1, CA9007CH
		CA9007 Clearcoat	CA9007/B900	-
		CA9007 Clearcoat Activator	CA9007Z	-
		CA9007 Clearcoat Reducer	CA9007F	CA9007FB, CA9007FR
Pz	PPG Single-stage Exterior Paint System	Primer	CA7502	CA7502W
		Filler/Surfacer	CA8620G	CA8620TG
		Surfacer Activator	CA8000B	-
		Surfacer Thinner	CA8000C	CA8000C1, CA8000C2
		CA8800 Base	CA8800/XXXX CA8800/SRXXXX	*Contact Epic Aircraft for approved colors.*
		CA8800 Activator	CA8800Z	-
		CA8800 Reducers	CA8800CT	CA8800CT1, CA8800CT2
		CA8800 Clearcoat	CA8800/B900	-
		CA8800 Clearcoat Activator	CA8800Z	-

*Contact Epic Aircraft to identify the paint style for the part being painted.

Table 51-20.5: Px Colors

Paint Style	Description	Clearcoat Type	Notes
P0	Flat Black	Flat	100% fog coat – No forced cure
P3	Trim Black	Matte	Force dry clear coat

Table 51-20.6: Py Colors (Deltron 2000)

Paint Style	Description	Deltron Basecoat Part Number	Notes
P1	Garmin Black Metallic	926535	Clear Coat: Matte; 85% DC8115 and 15% DC8117;
P4	Slate Gray	237506	-
P5	Marble Gray	135519	-
P6	Blue	197220, 929558A	Clear Coat: Eggshell (FC03); 70% DC8115 & 30% DC8117
P9	Light Neutral	PMXICF10	-
P10	Ivory	PMXICF5	-
P11	Roma Red	5204	-
P12	Sunblast Yellow	82960	-
P13	Orange	61066	-
P14	Cobalt Blue	15649	-
P16	Kiwi Green	944877	-
P17	Tamar Blue	917398	-
P18	Dark Turquoise	45967	-
P19	Dottergelb	83790	-
P20	Ashen Green	PMXICF4	-
P21	Coral Pearl	PMXICF8	-
P22	New Orchid	PMXICF9	-
P23	Gray	PMXICF13	-
P24	Phantom Grey	PMXICF11	-
P25	Jade Green	PMXICF12	-
P26	Sandlewood 2	PMXICF40	-
P27	Solid Black	9300	Paint Px Replacement (ChromaBase 99K)

Table 51-20.7: Deltron 2000 Toners

The approved Deltron 2000 basecoat toners are listed below. Approved toners may be combined in any ratios to produce alternate paint colors.

PPG Part Number	PPG Description
DMD614	Blue
DMD619	Blue Shade Violet
DMD622	Red
DMD624	Violet
DMD641	Yellow
DMD642	Yellow
DMD646	Weak White
DMD648	Weak Black

DMD649	Clear
DMD665	Yellow LF
DMD666	Yellow LF
DMD1602	GS Yellow
DMD1607	Blue
DMD1608	LF Orange
DMD1609	Quindo Violet
DMD1610	Orange
DMD1613	Weak Blue
DMD1615	Weak Green
DMD1625	Yellow
DMD1627	Indo Blue
DMD1634	Organic Brown
DMD1647	Carbon Black
DMD1675	Blue
DMD1676	Blue
DMD1677	Red
DMD1678	Green
DMD1679	Red
DMD1681	Med. Alum.
DMD1683	Black
DMD1684	White
DMD1693	Green
DBX1689	Clear
DX995	Matt Base
PRLX2	Crystal Silver Pearl

D. Body Filler Repairs

(1) Body Filler and Secondary Layup

Body fillers can be used wherever a large gap, joints, major surface discontinuities or other large areas require working to create a smooth surface where a surfacer alone is not practical.

Filler is included as part of the total thickness limits described in 51-20.2(B)(1). If the thickness limit is exceeded with the use of body filler, a secondary layup and Lightning Strike Protection (LSP) repair must be performed.

In areas where body filler is used other than to fill small pinholes or voids, a secondary layup must be used to assist holding body filler in place. After the body filler is allowed to dry, a single ply of approved fiberglass cloth will be used as a secondary layup, and a lightning strike repair over the fiberglass will be performed. The fiberglass may be applied and cured separately using an approved resin, or may be applied and cured at the same time as the LSP repair. Refer to Table 51-20.2 for approved body fillers, fiberglass, and resin.

It is acceptable to substitute fiberglass cloth with up to 2 plies of 3k plain weave carbon fabric. In regions of thicker body filler centered over the top of the fuselage seam, along the bottom of the fuselage seam, and along the wing root fairings. Carbon fabric not to exceed 30" in width. Cotton flock may be used along with or in place of micro to create the body filler slurry.

(2) LSP Repairs

Note: Body filler repairs 4 square inches or smaller DO NOT require and LSP layer.

CAUTION: Do not sand though the LSP foil.

(a) Start by sanding a 3” radius past the repair area using 80 - 120 grit sandpaper to remove any surface irregularities, then sand smooth with 120 - 180 grit sandpaper.

(b) Prepare the surrounding area for electrical bonding by sanding 3 inches around the body work using 80 or 120 grit sandpaper to expose foil.

(c) Prepare the area for bonding by cleaning the repair area using isopropyl alcohol. If using vacuum, lay down sealant tape 4 inches around the body work area.

Note: LSP repairs must overlap the surrounding LSP by at least 1”.

(d) Cut the dry expanded foil so there is at least a 1 inch overlap all the way around the area of repair. Cut peel ply and perforated film the same size, at least 1 inch larger than the foil. Cut breather cloth 1 inch smaller than the perforated film.

(e) Measure out Rhino1307-LV and 3176 hardener materials to their appropriate ratios and mix; add micro to the resin until a toothpaste-like consistency is achieved.

Note: The pot life is 10 -15 minutes at room temperature after hardener is added.

(f) Apply resin to the surface and spread, wetting the entire area of repair.

(g) Apply foil on the area and work it smooth onto the surface while maintaining the 1 inch minimum overlap of foil surfaces for electrical contact.

(h) Wet out the working area again and apply peel ply over the expanded foil.

(i) Wet out the peel ply and apply the perforated film over the peel ply.

(j) Apply the breather cloth over the perforated film.

(k) If using vacuum, fold a piece of breather cloth such that it is four layers equivalent thickness near the center of the repair, and is large enough to cover the vacuum valve. Seal the repair area using vacuum bag and sealing tape. Install the vacuum valve by cutting out an area around the extra breathing cloth large enough for the valve and then installing. Apply vacuum.

(l) If *not* using vacuum, attach bagging material around the affected area and weigh down the bags using lead shot, or similar. If weight cannot be applied to the bag due to location, tape the bagging down such that it can be firm against the breather cloth.

(m) Allow the resin to cure for 3 hours minimum at room temperature. After room temperature set, cure for 168 hours (7 days) at 77°F, 24 hours at 110°F, 12 hours at 130°F, or 2 hours at 212°F.

(n) After cure, remove bagging materials and clean area with isopropyl alcohol. Inspect the article for complete wet-out and proper adhesion. The repair may then be worked for paint. The repair may be lightly sanded with 120 grit sandpaper as long as expanded foil will not be exposed.

Figure 51-20.1: LSP Repair

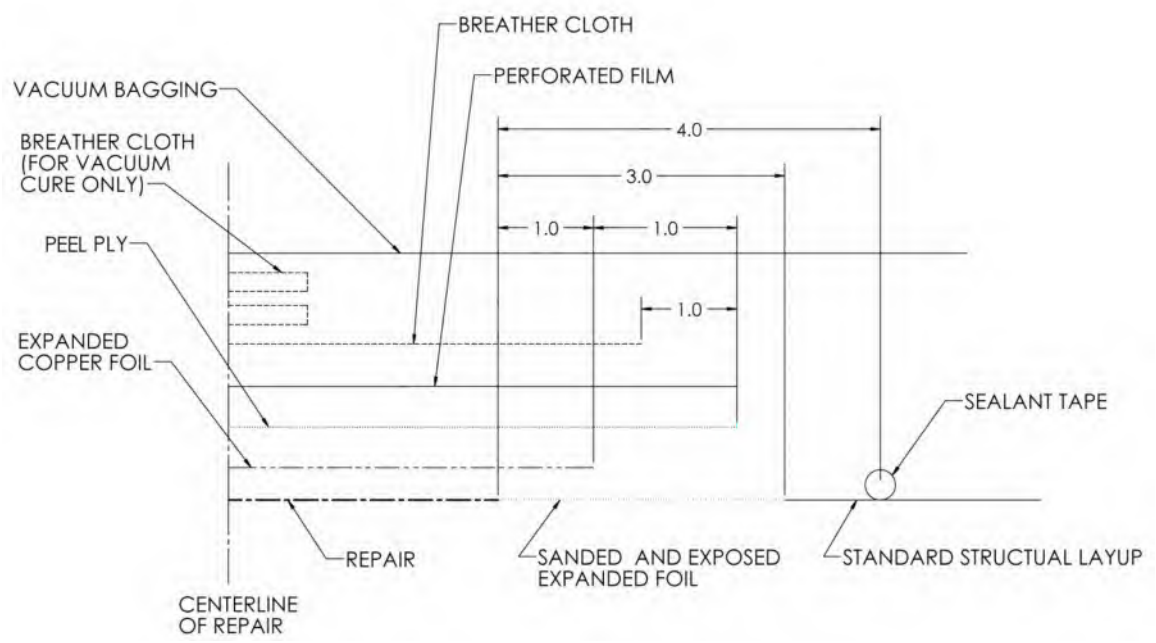

(3) For any non-structural, cosmetic touch ups in areas that are not covered with lightning strike protection mesh, or on control surface counterweights, holes may be filled with Rhino 1307-LV mixed with micro filler until a toothpaste-like consistency is achieved. A single ply of approved fiberglass cloth may be applied over the touch up area using the Rhino 1307-LV epoxy resin.

Table 51-20.8: Approved Lightning Strike Protection Material

Manufacturer	Part Number	Description
Dexmet Corporation	3CU7-100FA	Expanded copper foil, dry
Astroseal	CU040CX36	Expanded copper foil, dry
Niles	CU195F	Expanded copper foil, dry

E. Non-Structural Bonding

Note: This section covers installation practices for bonded fasteners, including Click Bond® and Rotaloc® fasteners, stand-offs, and tie-blocks.

(1) If fastener removal is required, do the steps that follow:

CAUTION: Monitor the temperature of the fuselage skin and DO NOT exceed 270°F (132°C).

(a) Using a heat gun, carefully heat the fastener to 260° F (127°C).

Note: Apply heat only until the epoxy begins to soften.

(b) Carefully apply a twisting force to the fastener parallel to the fuselage skin to break the bond of the adhesive and remove the fastener.

(2) Prepare the surface as follows:

CAUTION: Use care not to damage any carbon layers when removing adhesive.

(a) Clean any residual adhesive using 80 - 220 grit aluminum oxide sandpaper. Make sure at least 90% of the old adhesive is removed.

(b) Clean the surface with isopropyl alcohol and a lint-free cloth.

(3) Installation:

(a) Clean the bonding surface of the fastener with isopropyl alcohol and a lint-free cloth.

(b) Mix the appropriate adhesive in accordance withe the manufacturer's instructions. Refer to chapter 20-10 for approved adhesives.

(c) Apply firm pressure to bond the fastener.

Note: The adhesive should squeeze out around the entire circumference of the fastener. For Rotaloc® fasteners, adhesive should squeeze through all holes in the bonding surface to a depth of 0.005 - 0.250".

(d) Remove excess adhesive and smooth the remaining adhesive into a fillet around the circumference of the fastener.

(e) The adhesive will be set within 1 hour. Allow 24 hours at 70°F to fully cure.

F. Protective Tape Installation

The use of erosion tape PM-T1H or 3M 8672 is allowed on the wing tips between the de-ice boot and light lens, the wing roots, and the horizontal stabilizer tips outboard of the de-ice boots. 3M 8561 polyurethane protective tape is may also be used if PM-T1H and 3M 8672 is not available.

(1) Install the tape in the areas shown in figure 51-20.3.

(a) Clean the surface with 50/50 isopropyl alcohol and water.

(b) Cut to length of area to be installed.

(c) Install the tape using a plastic squeegee.

Note: Heat, up to 120°F, may be applied to the tape during application improve the adhesiveness of the tape.

Figure 51-20.1: Protective Tape Installation

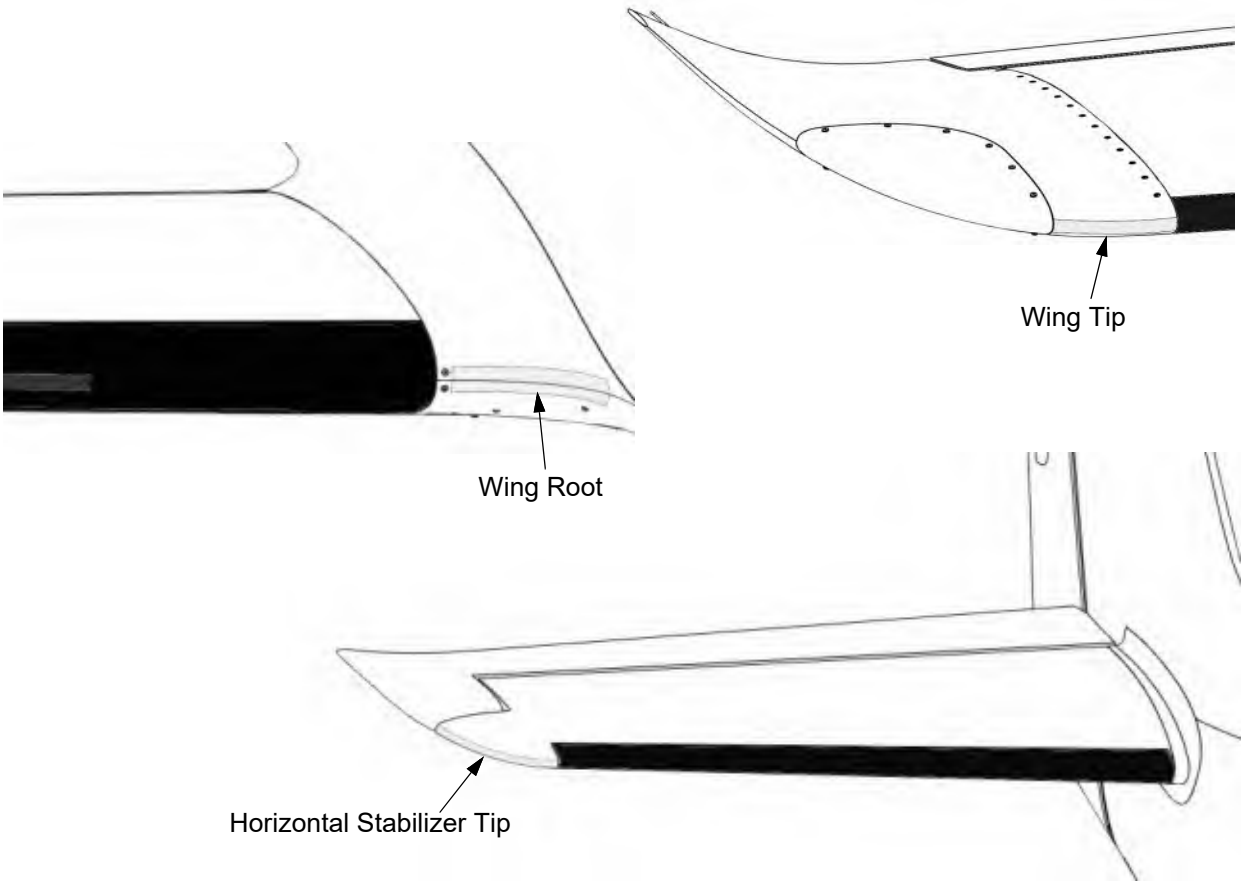

Right side shown, left side opposite.

G. Radome Boot Installation

(1) If available, install radome boot PM-240 (0.012” thick, clear polyurethane) per manufacturers instructions in the area shown in figure 51-20.2.

CAUTION: Paint must be fully cured before radome boot installation.

Figure 51-20.2: Radome Boot Installation

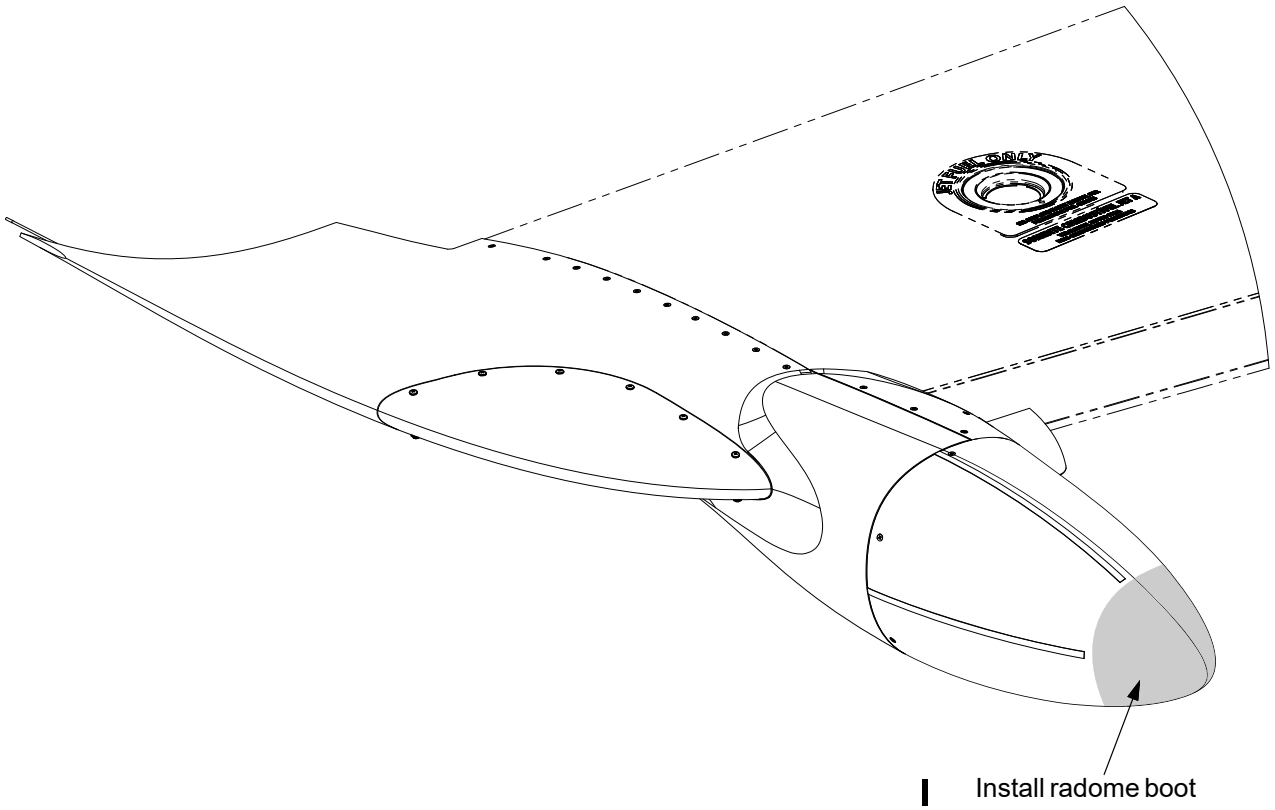

H. Wing Bond Inspection

Perform every 11,000 hours.

(1) Ensure Fuel Selector is set to OFF.
(2) Defuel the wing. Refer to Chapter 12-20.
(3) The following note provides the amount of fuel to remove. Chapter 12-20 provides how to remove fuel.

Note: The wing does not need to be completely defueled. Remove only the amount of fuel necessary so that it is not contacting the outboard most rib where air will be connected.

(4) Remove the wing tip (refer to Chapter 57-30).
(5) Remove hoses attached to both forward and aft flame arrestors.
(6) Remove purge line and cap using 1/4 in cap. (refer to figure 51-20.5).
(7) Connect pressure to the aft flame arrestor (refer to figure 51-20.4).
(8) Cap the forward flame arrestor (refer to figure 51-20.4).

CAUTION: For wing pressurization, use a manual pump. Do not use shop air.

CAUTION: Do not pressurize wing above 1.5 PSI.

(9) Pressurize the wing tanks using air between 0.5 and 1.0 PSI.
(10) Visually inspect the fuel bay by looking down the length of the wing from the outboard end on both the upper and lower wing skin. Each rib bond should be evenly spaced and obvious.
(11) Mark each rib from the outboard most end to the landing gear attachment rib. Any discontinuities will be obvious as the wing skin will pillow more in that area, and the separation between ribs will be excessive.
(12) While wing is pressurized, Perform Tap Test on ribs, spars, upper and lower wing skins (Refer to Chapter 51-10)

Note: Ribs 4 through 9 have geometry that allows fuel to pass through between ribs. In these areas, there will be no bond to inspect via tap test.

Note: For ribs 4 through 9, alternate methods for inspecting bondlines may be used if approved by Epic. These may include, but are not limited to, mechanical impedance or ultrasonic transmission.

(13) If disbonds or indications are found, contact Epic.
(14) Remove caps and re-install fittings and hoses.
(15) Install wing tip (refer to Chapter 57-30).
(16) Perform all of the above steps on left and right side of the wing.

Figure 51-20.3: Fuel Vent System

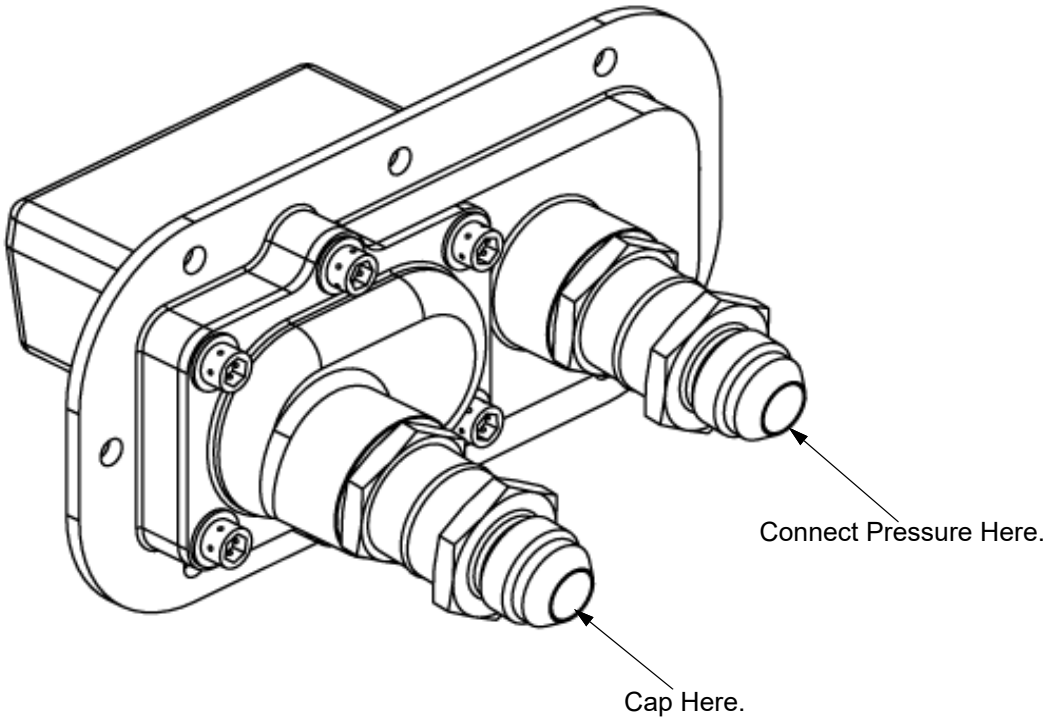

Figure 51-20.4: Fuel Purge Line Location

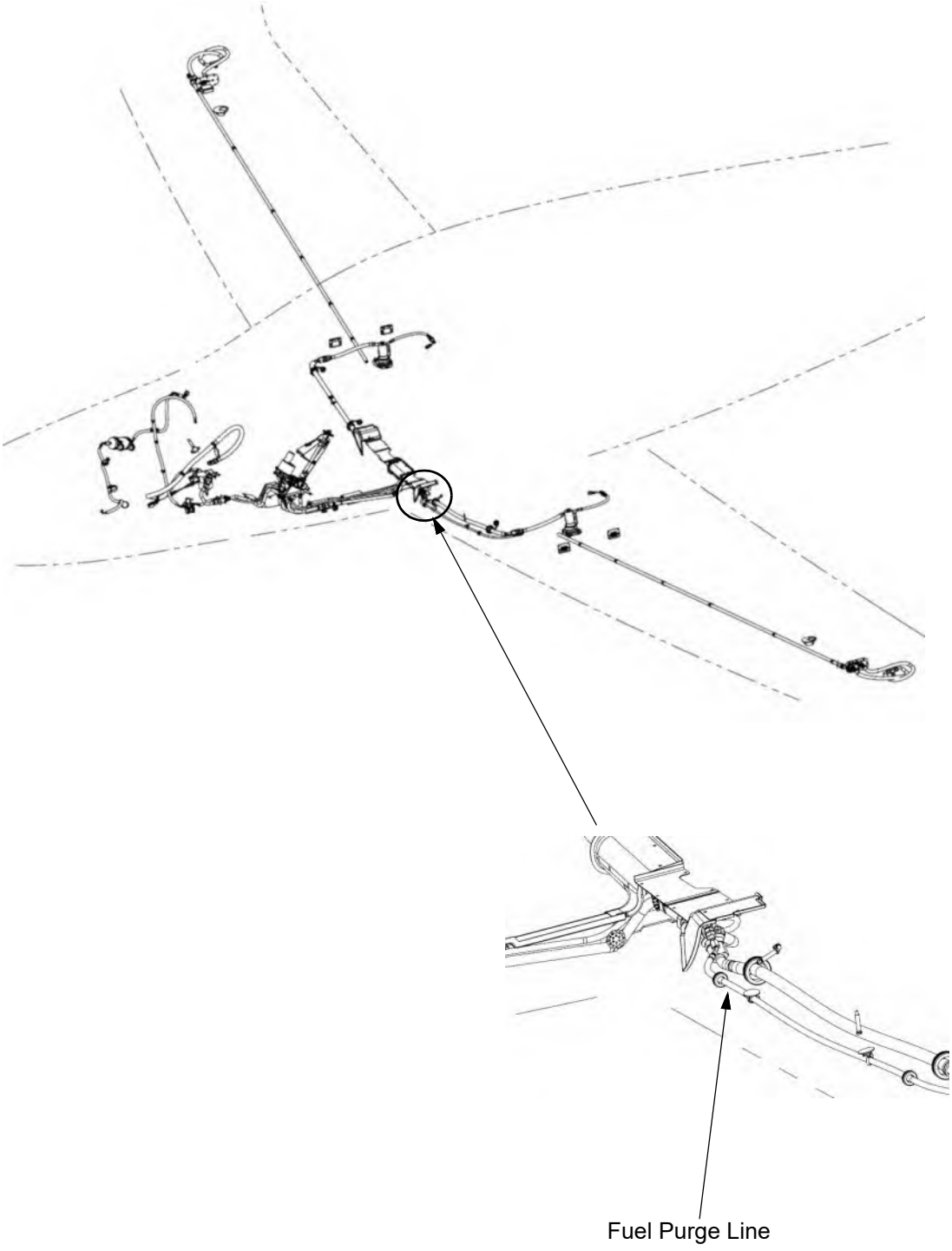

This Page Intentionally Left Blank

FASTENERS

1. General

This chapter gives the procedures for installation of standard and specialty fasteners used in the assembly of this airplane.

2. Maintenance Practices

A. Corrosion Protection

(1) Fasteners are wet installed with a sealant or corrosion inhibiting compound to prevent moisture ingression between all aluminum, carbon, and fastener interfaces. Type 1 corrosion inhibiting compound may be used in all interior applications. Type 2 polysulfide sealant is preferred and may be used in locations which specify Type 1 corrosion inhibiting compound. All fasteners that pierce the pressure vessel are wet set using Type 2 sealant. Fasteners that go through the firewall are wet set using Type 3 firewall sealant. It is permissible to use Type 3 sealant where Type 2 sealant is specified. The table below lists the approved sealants and corrosion inhibiting compounds that may be used for corrosion barriers.

B. Bolts, Screws, Nuts, and Washers

Table 51-40.1: Corrosion Barrier Material

Material			Supplier
Type 1	Corrosion Inhibiting Compound	Cor-Ban 27L	Zip Chem Products 400 Jarvis Drive, Morgan Hill, CA 95037 or distributor
Type 2	Polysulfide Sealants	AC350 B 1/2 (preferred)	3M Aerospace Aircraft Sealants 3M Center, St. Paul, MN 55114 or distributor
		PR-1425 B 1/2	PRC Desoto 14126 NE 190th St., Woodville, WA 98072
Type 3	Firewall Sealant	PR-1995 Class B	PRC DeSoto International, Inc. 12780 San Fernando Rd., Sylmar, CA 91342 or distributor

Applications of bolt or screw heads to a surface that is not square to the shank are permitted up to 0.020 inch under the head on metal parts and up to 0.030 inch under the head on composite parts if the heads are not permitted to turn during the torque application.

Note: Do not use bent bolts or screws.

To prevent damage caused by galling, all stainless steel threaded hardware must be lubricated during installation. Any molybdenum disulfide/petrolatum based anti-seize compound that meets the requirements outlined in MIL-PRF-83483 are approved for use. If the stainless threaded hardware is in a location that must also be corrosion inhibited, it is permissible to use both the anti-seize and a corrosion barrier compound on the same fastener.

(1) Bolt Length Range and Requirements
When bolt or screw lengths cannot be predetermined due to variations in material thickness, the fastener length may be changed, if needed, to maintain one to four threads projection (not including the chamfer on the end of the bolt) through the nut, nutplate, or rivnut. The fastener must also have sufficient threads to prevent bottoming out before the part is attached. If needed, bolt lengths are checked by installing the bolt without the mounting part. The clearance between the bolt head and the mounting surface should be smaller than the thickness of the mounting part.

(2) Washers
Use a washer under bolt or screw heads when the fastener will be torqued. This washer can be omitted when the bolt or screw head is mounted on metal, but not when the head is mounted on metal that is painted or when the washer is required by specification. Washer(s) can be added to satisfy the thread engagement requirements, but a maximum of three washers for both the head and nut combined and no more than two washers under either the head or the nut is permitted. It is permissible for washers to be ranged in thickness to achieve proper thread projection. It is recommended to range the washer thickness on the nut side when possible. Use a longer approved bolt or screw as required.

(3) Castellated Nuts and Other Locking Devices
Bolts used to retain a bearing or rotating member must be installed using a castellated nut and a cotter pin, a positive nut locking to bolt device (not self-locking alone), or an anti-rotating bolt device. When using castellated nuts with no applied torque, put washers under both bolt head and nut for free rotation. When torque is applied to a castellated nut, first apply the specified torque then the loosen nut, if necessary, until the nearest slot of the nut aligns with the hole of bolt. Install the cotter pin in accordance with Chapter 20-50.

(4) Torque Values
Refer to Chapter 20-60.

(5) Safetying
Refer to Chapter 20-50.

C. Inserts

(1) Helicoil
To install Helicoils, use an appropriate tool to wind the insert into the hole until the top coil is ¼ - ½ turn into the tapped thread and then break off the tab. The Helicoils used at Epic Aircraft, LLC are of the stainless steel self-locking type.

(2) Bonded-In Inserts
The length of the insert must be equal to or less than [0.040 + material thickness]. Bond

the insert in using a mixture of 80% Rhino 2-part epoxy resin with 20% micro balloons by weight. Bond the inserts through a vent hole until the resin and micro mixture emerges out the other vent hole. Screws or bolts installed into these inserts must use some form of self-locking device. Use of these inserts is limited to non-structural applications only.

(3) Other Types of Threaded Inserts
Internal threads (with or without self-locking features) and external threads (studs) molded in place or locked in place, can be used in softer materials such as in plastics and in wood. Use of these inserts is limited to non-structural applications only. Install these inserts in accordance with the insert manufacturer's instructions.

(4) Clips, Plastic Fasteners, Upholstery Fasteners, Hook and Loop Fabric Fasteners, etc.
These fasteners are used for attaching upholstered panels. Use of these fasteners is limited to non-structural applications only. Install these fasteners in accordance with the fastener manufacturer's instructions.

D. Nutplates

Only self-locking nutplates are approved for use on this airplane. Nutplates are installed using countersunk head solid aluminum rivets (AD) or countersunk head pop/pull type rivets (stainless steel or aluminum).

CAUTION: Only stainless steel pop or pull type rivets are approved for installation of nutplates onto carbon material.

Figure 51-40.1: Blind Installation of Nutplates with Minimum Two-Thread Projection

Do not use aluminum rivets through carbon materials. Use only stainless steel pop/pull rivets.

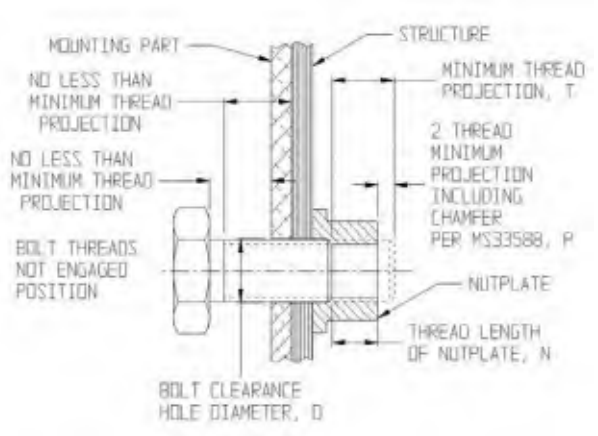

For maximum possible thread use:

- Pre-install the bolt without mounting part(s) until bolt just starts to bottom out in the nutplate (Refer to the figure above).

CAUTION: Do not damage threads

- Measure clearance between bolt head and structure.
- Clearance should be not more than 0.9 x thickness of the mounting part(s).

Thread Size	Max. Diameter	D		P	N (Ref.)	T	Min. Number of Turns
		± 0.005	± 0.010				
6-32	.138	.148	.158	.0625	.171	.234	7.5
8-32	.164	.174	.184	.0625	.188	.251	8.0
10-32	.189	.200	.210	.0625	.188	.251	8.0
1/4-28	.249	.260	.270	.0714	.219	.291	8.25
5/16-24	.312	.323	.333	.0833	.266	.349	8.5

3/8-24	.374	.385	.395	.0833	.282	.365	8.75
7/16-20	.437	.448	.458	.1000	.328	.428	8.75
1/2-20	.499	.510	.520	.1000	.547	.647	13.0

Figure 51-40.2: Floating Nutplate Hole Dimensions

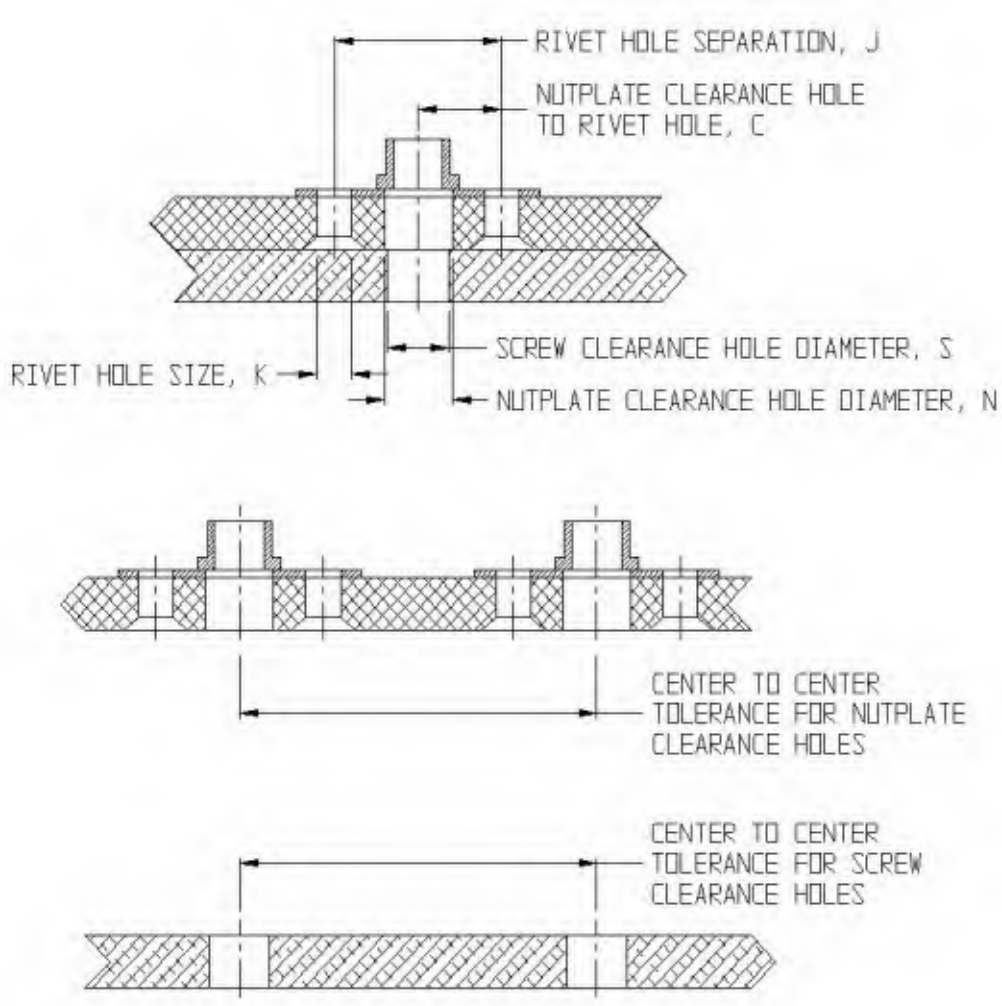

The dimensions given below permit maximum center to center tolerances and use the full floating range of the nutplate. The center to center tolerances are ± 0.030 for the nutplate clearance holes and ± 0.030 for the screw clearance holes.

Thread Size	Major Dia.	MS21075/ MS21076 Dash No.	Rivet Size Dia.	K +.005 -.000	Common Drill Size	C ±.005	J ±.002	N ±.005	N ±.010	S ±.005	S ±.010
4-40	.112	04	3/32	.098	40	.203	.406	.1570	.1610	.1360	.1440
6-32	.138	06	3/32	.098	40	.218	.437	.1820	.1875	.1610	.1695
8-32	.164	08	3/32	.098	40	.234	.468	.2090	.2130	.1890	.1935
10-32	.190	3	3/32	.098	40	.250	.5000	.2344	.2380	.2130	.2210
1/4-28	.250	4	3/32	.098	40	.281	.562	.2950	.2969	.2720	.2810
5/16-24	.313	5	1/8	.130	30	.359	.718	.3580	.3594	.3390	.3438

(1) Nutplate Assemblies

Nutplate assemblies are created for use inside composite parts where it is difficult to rivet a nutplate. They can be used in structural or non-structural applications. Nutplate assemblies contain two or more nutplates riveted on a G10 strip, CRES, or aluminum strip (anodized or coated with zinc oxide for carbon applications) with countersunk head solid aluminum rivets (AD), aluminum, or stainless pop/pull type rivets. These assemblies can be held in position by countersunk head pop/pull type rivets (stainless steel or aluminum), bonded in place temporarily, or both. Temporary bonding agents include nonfoam double-sided sticky tape and CA glue. More permanent bonding methods can be used, such as EA 9394 Hysol, but the bond itself is not considered a necessity unless there is only one nutplate.

Individual nutplate hole pattern, screw clearance hole, and two countersunk rivet holes, may be rotated about the center of the screw clearance hole by ± 15° if the center of all three holes lays on the same centerline and e/d greater than or equal to 2.5 between any hole and the edge of the part (refer to the figure below).

Figure 51-40.3: Hole Pattern and Tolerance - Individual Nutplates

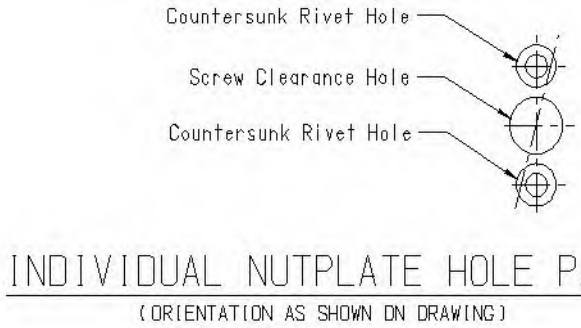

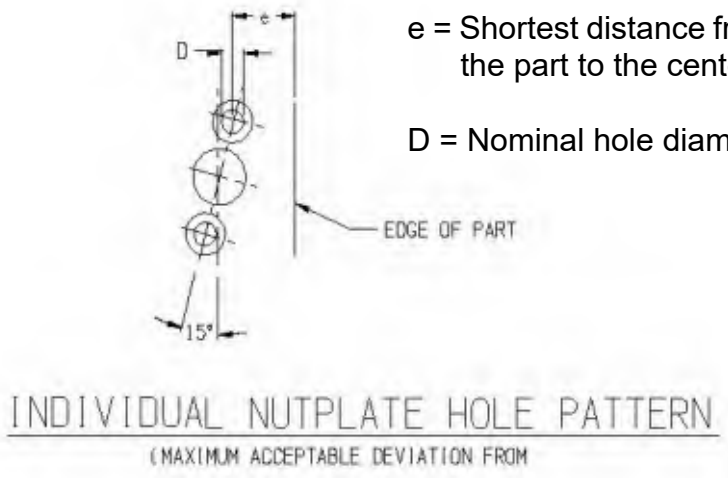

e = Shortest distance from the edge of the part to the center of the hole.

D = Nominal hole diameter.

E. Click Bond® and Rotaloc® Fasteners

Refer to 51-20 for non-structural bonding procedures.

F. Rivnuts

Approved rivnuts are splined with overall heights comparable to nutplates. The rivnuts are not self-locking. The installed rivnut threads must be square to the mounting surface within 0.015 inch per inch of length. When mounting through carbon material, use stainless steel rivnuts.

Figure 51-40.4: Blind Installation of Rivnuts with Minimum Two-Thread Projection

- Rivnuts are not self-locking.
- Clearance should be not more than 0.9 x thickness of mounting part(s).

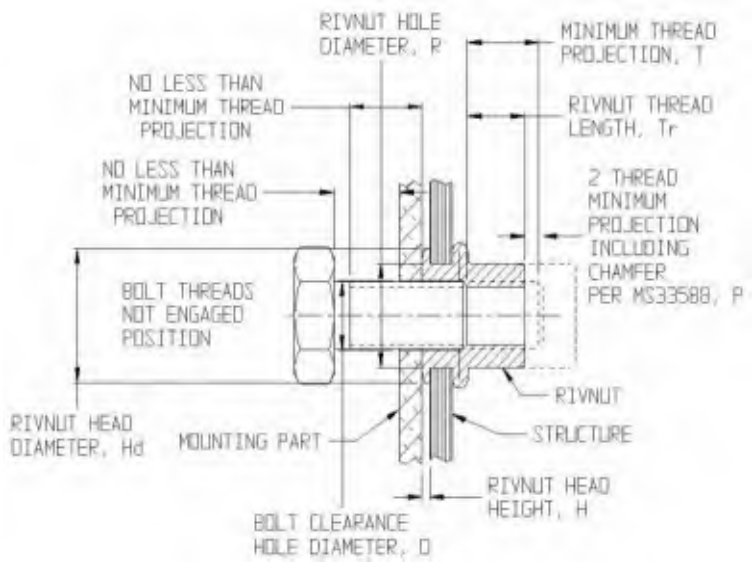

Thread Size	Max. Dia.	D		R		P	Tr (Ref.)	T	Min. No. of Turns	H	Hd
		±.005	±.010	Min.	Max.						
6-32	.138	.148	.158	.266	.272	.0625	.219	.281	9.0	.030	.390
8-32	.164	.174	.184	.266	.272	.0625	.188	.250	7.0	.030	.390
10-32	.189	.200	.210	.297	.303	.0625	.203	.266	8.5	.030	.415
1/4-20	.249	.260	.270	.391	.397	.1000				.030	.515
1/4-28	.249	.260	.270	.391	.397	.0714				.030	.515
5/16-18	.312	.323	.333	.531	.538	.1111	.278	.389	7.0	.030	.685
3/8-16	.374	.385	.395	.531	.538	.1250				.030	.685

G. Rivets

CAUTION: Use only stainless steel pop/pull rivets when riveting through carbon materials.

Figure 51-40.5: Riveted Joints

- Rivet diameter (d) should equal 2 to 3 times the thickness of the maximum single sheet material (T)
- Do not rivet through composite material without a metal backing on the upset end of the rivet.
- Do not use aluminum rivets through carbon materials. Use only stainless steel pop/pull type rivets.

Reference rivet specification numbers and descriptions:

NASM20426 100° Flat Head Rivet
NASM20470 Round Head Rivet
NAS1398 Round Head Pop Rivet
NAS1399 100° Flat Head Pop Rivet

Ref. shear strength of 2117-T4 aluminum rivet = 28000 psi

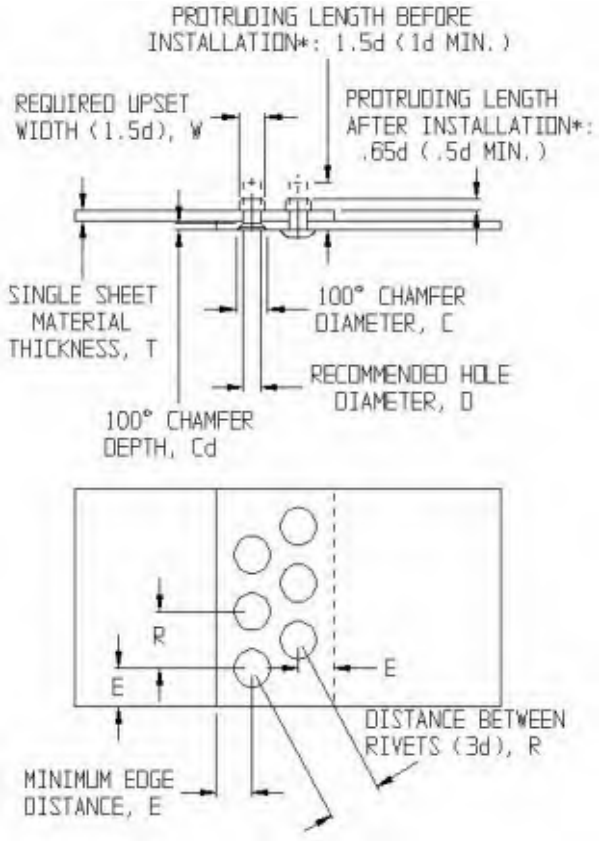

*The length of the protruding end of the rivet before installation (1.5d, 1.0d MIN.) and the length of the same end after installation (0.65d, 0.5d MIN.) apply only to solid rivets (Refer to the figure above). For pop/pull type rivets, these dimensions are determined by the manufacturer, and selecting a correct grip range ensures that these dimensions are correct.

Rivet Size Dia. (d)	Max. Rivet Dia.	D + .004 - .000	C ±.004	Cd Max.	E	R	W	T (Max. Range) (1/2)d	 (1/3)d	Single Shear Load Per Rivet (lbs)
1/16	.065	.066	.114	.024	.125	.188	.094	.032	.021	90
3/32	.097	.098	.179	.038	.188	.281	.141	.047	.031	190
1/8	.128	.129	.225	.044	.250	.375	.188	.062	.042	340
5/32	.159	.160	.286	.057	.312	.468	.234	.078	.052	530
3/16	.190	.191	.353	.072	.375	.563	.281	.094	.062	770
7/32	.222	.223	.415	.084	.438	.656	.328	.110	.073	1050
1/4	.253	.254	.476	.097	.500	.750	.375	.125	.083	1370
5/16	.315	.316	.564	.108	.625	.938	.469	.156	.104	2140
3/8	.378	.379	.694	.136	.750	1.125	.562	.188	.125	3090

Table 51-40.2: Rivet Applications

Applications	Description	Rivet Type Used
Structural	General	Stainless steel pop/pull rivets
	Not used on carbon material	2117-T4 (AD) solid aluminum rivets
Non-Structural	General	Solid aluminum rivets (AD) Stainless steel, cadmium plated steel, or aluminum pop/pull rivets.
	Individual nutplate installations and nutplate assemblies where the nutplates could be structural but the rivets are not.	Countersunk head solid aluminum rivets (AD) Countersunk head stainless steel, cadmium plated steel, or aluminum pop/pull rivets.
	Nutplate assembly installations where the nutplate assembly could be structural but the rivets are not.	Countersunk head stainless steel, cadmium plated steel, or aluminum pop/pull rivets.
	Riveting through non-carbon composite materials	Aluminum rivets (AD)
	Riveting through carbon materials	Stainless steel pop/pull rivets.

Figure 51-40.1: Solid Rivet Details

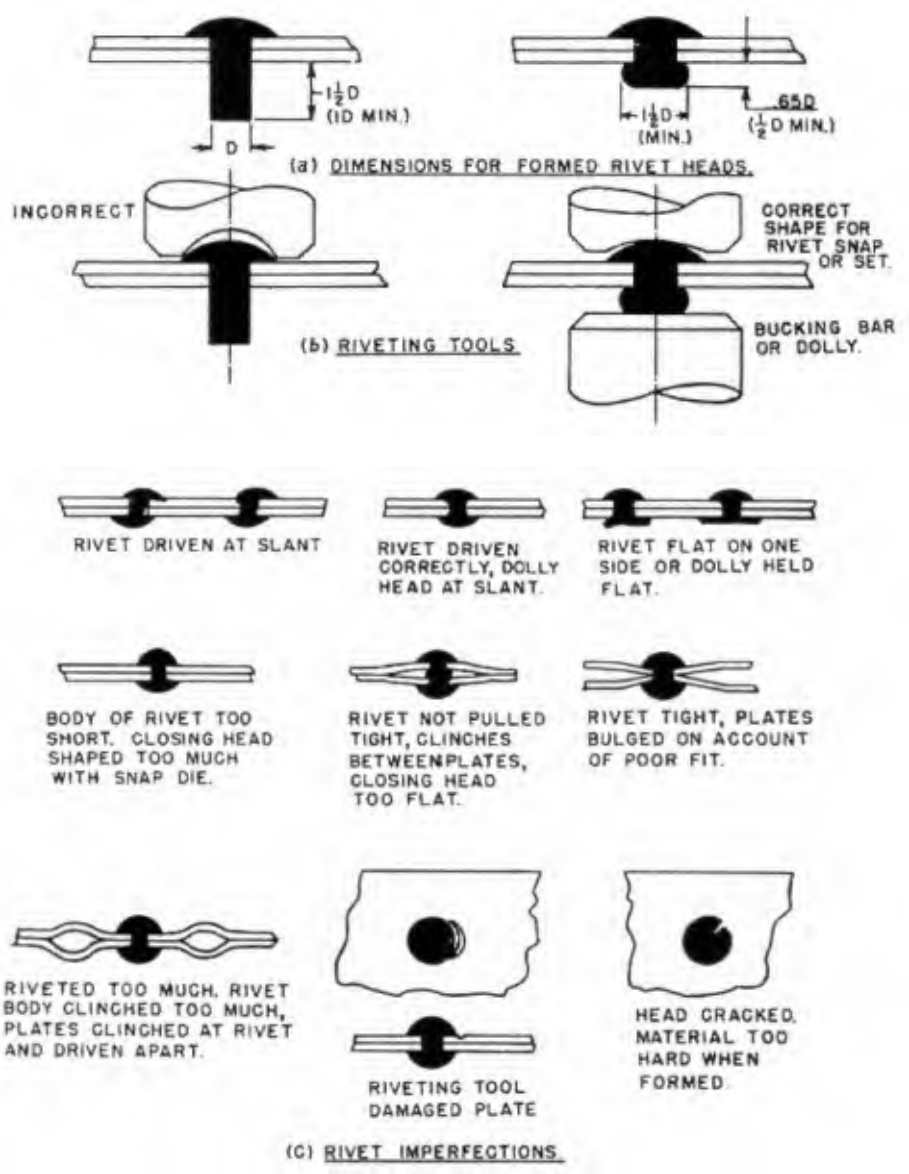

(1) Rivet Length Changes and Substitutions

Composite lay-ups vary in thickness such that the total mounting thickness must be checked to determine the correct rivet length/protruding length before installation. The protruding length of solid rivets before installation should be 1.5 diameters, with a minimum of 1.0 diameter. If a particular solid aluminum rivet does not meet this protruding length requirement, a different length solid aluminum rivet of the same type which does meet the requirement may be substituted. If a particular solid aluminum rivet needed for assembly is not available, a longer solid aluminum rivet of the same type may be cut to the desired length. However, this trimmed length must meet the protruding rivet length requirement stated above. If a particular pop/pull type rivet does not meet the length

requirements, a different length pop/pull type rivet of the same type, which does meet these requirements may be substituted.

(2) Pop or Pull Rivets
Pop/pull rivets through a composite material must have a metal backing plate or washer between the upset-end of the rivet and the composite material. When riveting through composite materials, the mounting thickness must be checked because composite layups vary in thickness.

For Cherry rivets, the Cherry grip gage 269C3 (National Stock No. 5210- 00-255-7544) may be used for determining the correct rivet/grip length. If other brands of pop/pull type rivets are used, follow the manufacturer's method of determining the correct rivet/grip length before installation. When deciding between two rivet lengths to use, always round up to the longer size.

Table 51-40.3: Grip Ranges for CherryMax Rivets

Grip Range	Rivet Grip No.
.042 to .062	-01
.063 to .125	-02
.126 to .187	-03
.188 to .250	-04
.251 to .312	-05
.313 to .375	-06
.376 to .437	-07
.438 to .500	-08
.501 to .562	-09
.563 to .625	-10
.626 to .687	-11
.688 to .750	-12

H. Self-Locking Elements

(1) External Threads

(a) Encapsulated sprayed on epoxy patch is added to external threads with some variations on location and retaining strength to suit application. Re-use is not permitted and mating threads must be cleaned.

(b) Loctite™ types 222, 242, and 272 are used when both surfaces are metal. Loctite™ type 425 is used with plastic surfaces.

Primer N or T should be used before Loctite™ application only when both of the mating metal surfaces are inactive. Inactive surfaces include stainless steel, anodized aluminum, and pure aluminum that contains no copper ions. Aluminum alloys that contain copper ions such as 6061 alloys are not inactive. When using Primer N or T, apply it to the threads and wait 5 minutes for it to dry.

Apply the Loctite™ to the first two external threads, assemble then torque within 5 minutes of Loctite™ application. Wait 24 hours for the Loctite™ to fully cure.

(c) External threads and mating threads must be inspected for cleanliness before re-use. Clean as needed.

(2) Internal Threads

(a) Type 1 (preferred): Upset shapes on last few threads, generally elliptical or tri-lobed without serrations. No re-use permitted with Type 1 nuts

(b) Type 2: Nylon insert (unthreaded) on end of nut: No re-use permitted with Type 2 nuts.

(c) Threaded inserts may use Type 1 or 2 self-locking elements: Re-use of Type 1 nut-plates can be permitted with self-locking elements on external threads or with safety wire.

I. Self-Clinching Fasteners

(1) Self-Clinching Studs

With a hardened tool, force the stud into the mounting material in the correct direction as indicated on the applicable fastener specification. When using PEM studs which are a commonly used type of self-clinching fastener refer to the manufacturer's instructions for installation procedures.

The mounting material must be supported in the area surrounding the hole by a correct hardened anvil to prevent damage. Installation forces will vary with stud size and sheet material composition. The installation force must cause the mounting material to flow into recesses or grooves in the underside of the head of the stud. The displacement of this metal must provide push-out/pull-out resistance. The clinching portion of the stud must provide a positive, permanent attachment to the mounting material without damaging or affecting the threads. There must be no evidence of cocking, looseness, splits, or cracks.

Table 51-40.4: Self-Clinching Stud Installation

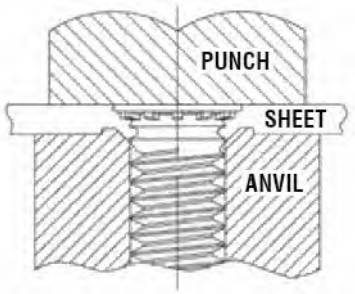

(2) Self-Clinching Nut
When using PEM nuts which are a commonly used type of self-clinching nut refer to the manufacturer's instructions for installation procedures.

Installation forces must be exerted between parallel faces so that the nut will be installed squarely and the correct embedment of knurled surfaces will result. Sufficient support must be given to the mounting material during clinching to prevent its collapse.

Self-clinching nuts must be attached to the structure by pressing and embedding a knurled or hexagonal configuration into the structure to provide anti-rotation displacing mounting material into the shank undercut to provide push-out resistance.

Swage-clinching nuts must be installed be pressing the nut into a hole sized to produce an interference fit and cause the knurl to broach into the structure to provide anti-rotation. Push-out resistance is developed by flaring the shank into a countersink on the opposite structure side or rolling the shank over on the opposite side.

Table 51-40.5: Self-Clinching Nut Installation

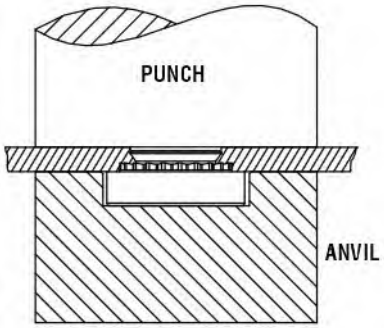

J. Tapped Holes

Table 51-40.6: Tapped Holes

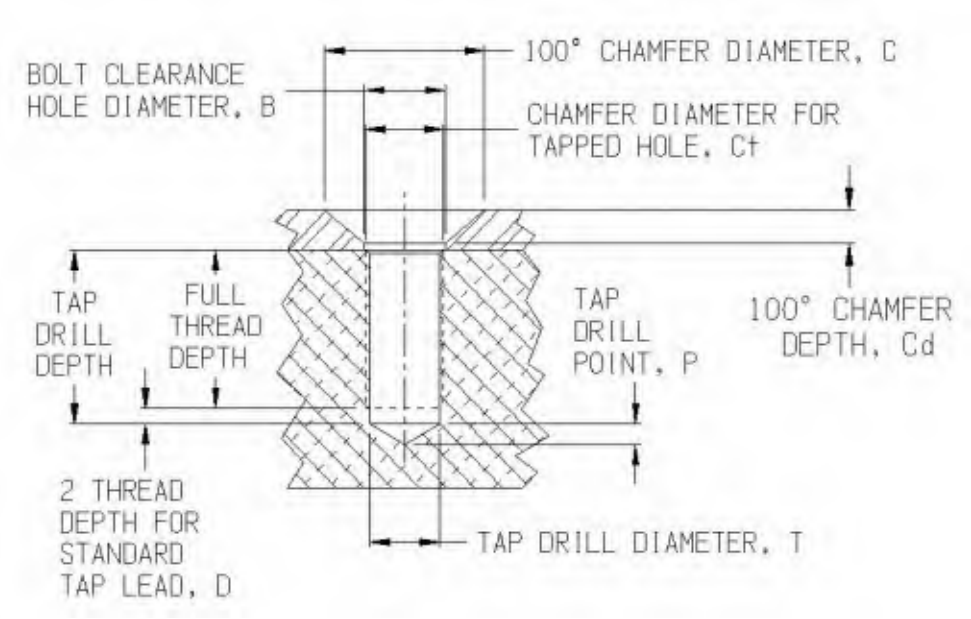

Thread Size	Max. Dia.	B		T		P	D	Ct		C	Cd	Min. Thread Engagement in Aluminum	
		±.005	±.010	Min.	Max.			Min.	Max.	+.010 -.000	+.005 -.000	6061 -T6	2024 -T4
6-32	.138	.148	.158	.1040	.1140	.0329	.0625	.138	.158	.279	.057	.180	.125
8-32	.164	.174	.184	.1300	.1389	.0401	.0625	.164	.184	.334	.068	.233	.161
10-32	.189	.200	.210	.1560	.1641	.0474	.0625	.190	.210	.387	.080	.286	.198
1/4-20	.249	.260	.270	.1960	.2067	.0597	.1000	.250	.270	.510	.106	.328	.227
1/4-28	.249	.260	.270	.2110	.2190	.0632	.0714	.250	.270	.510	.106	.388	.269
5/16-24	.312	.323	.333	.2670	.2754	.0795	.0833	.313	.333	.638	.133	.486	.336
3/8-24	.374	.385	.395	.3300	.3372	.0973	.0833	.375	.395	.766	.159	.611	.423
7/16-20	.437	.448	.458	.3830	.3916	.1130	.1000	.438	.458	.894	.186	.696	.482
1/2-20	.499	.510	.520	.4460	.4537	.1310	.1000	.500	.520	1.022	.213	.821	.568

K. Bearing Installation and Retention

(1) Loctite™ 680

(a) Clean all surfaces using a Loctite™ cleaning solvent in accordance with the solvent manufacturer's instructions.

(b) If the material is an inactive metal or the cure speed is too slow, spray the material with Loctite™ Activator 7471 or 7649 and let it dry.

(c) For Slip Fitted Assemblies - Apply Loctite™ 680 around the leading edge of the bearing and the inside of the housing then use a rotating motion during assembly to ensure good coverage.

(d) For Press Fitted Assemblies - Apply Loctite™ 680 thoroughly to both bond surfaces then assemble quickly.

(e) Let the Loctite™ 680 cure (refer to the manufacturer's instructions).

(2) Anvil Swaging

(a) Clean the housing bore as necessary to remove all foreign particles and contamination before installing the bearing.

(b) Inspect the bearings to assure that they are clean and free from contamination. If bearings require cleaning follow the bearing manufacturer's recommendations. Re-lubricate metal-to-metal bearings using approved grease. Do not lubricate self-lubricated bearings.

(c) Press the bearing into the housing taking care to ensure that the bearing is straight and not canted to the housing bore during insertion.

(d) Use the correct size anvil tool and ensure it is free from damage.

(e) Support the assembly in a press.

Table 51-40.7: Swaging and Proof Loads

Groove Depth (in) +.000 -.015	**Groove Width (in)** +.000 -.015	**Swaging Loads (lbs)**
.030	.045	(15000 x D) ± 3000
.045	.060	(18000 x D) ± 3000
.060	.075	(25000 x D) ± 5000

D = Outside diameter of the bearing
Use 50% of the tabulated values for bearings with aluminum outer races and 62.5% of the tabulated values for bearings with aluminum bronze outer races. Tabulated values are for CRES.

Figure 51-40.1: Anvil Swaging

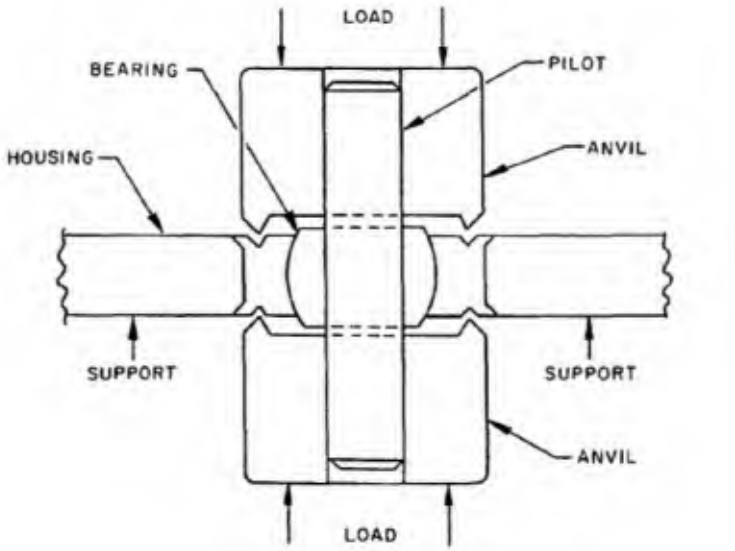

(f) Swage the lips over the housing then use a feeler gauge to verify that the edge gap is less than or equal to 0.005 inch. If necessary, reswage at a higher swaging load until the edge condition is met.

Figure 51-40.2: Completed Swage

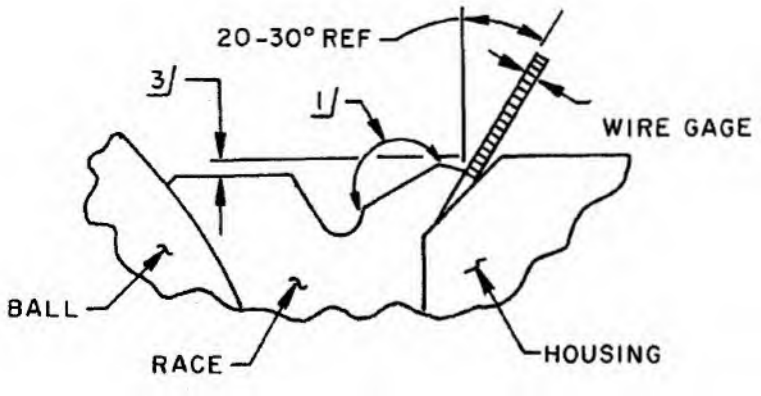

(3) Roller Swaging

(a) Clean the housing bore to remove all foreign particles and contamination before installing the bearing.

(b) Inspect the bearings to ensure they are clean and free from contamination. If bearings require cleaning follow the bearing manufacturer's instructions. Re-lubricate metal-to-metal bearings using approved grease. Do not lubricate self-lubricated bearings.

(c) Press the bearing into the housing taking care to ensure the bearing is straight and not canted to the housing bore during insertion.

(d) Use the correct size anvil tool and ensure it is free from damage.

(e) Insert the roller swaging tool into a drill press chuck. Set the drill press to rotate from 100-225 RPM.

(f) Support the assembly in a drill press.

Figure 51-40.3: Roller Swaging

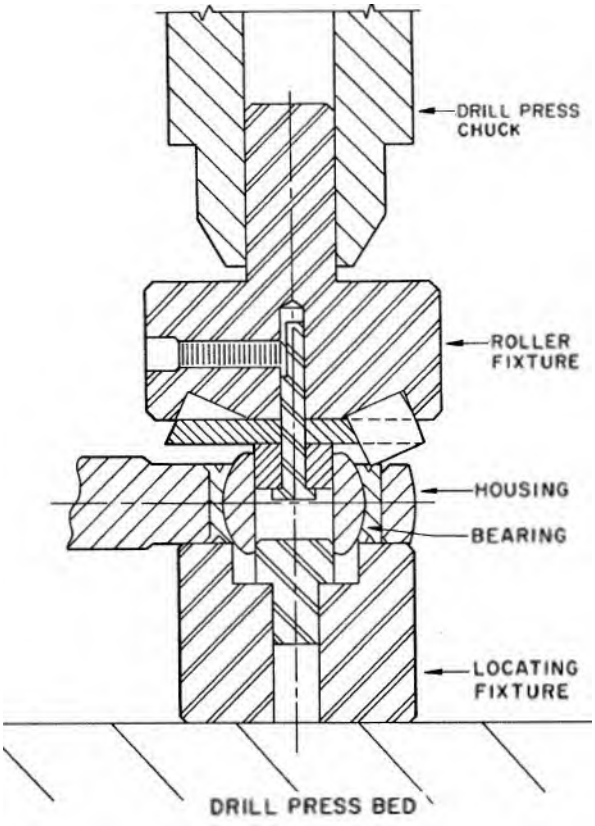

(g) Use the minimum swaging force necessary to meet requirements and to avoid lip or housing damage

(h) Swage the lips over the housing then use a feeler gauge to verify that the edge gap is less than or equal to 0.005 inch. If necessary, reswage at a higher swaging load until the edge condition is met.

(i) Repeat for the other side of the bearing.

(4) Bushing

(a) Clean the housing bore to remove all foreign particles and contamination before installing the bushing.

(b) Use a press to press the bushing into place. If a press is not available, draw the bushing into position by tightening two steel plates connected by a nut and bolt. A bushing should never be hammered into place.

L. Roll Pin

Gently tap the pin into position using a hammer and a roll pin punch.

M. Clamps

Clamps are used on SCAT tubing and flexible hose lines, including worm drive and Marman clamps. Refer to worm-drive clamp torque values. Torque Marman clamps to the torque value shown on the clamps unless otherwise specified.

This Page Intentionally Left Blank

REPAIRS

1. Description

This chapter provides the procedures for repair of the airplane due to major structural damage and to lightning strike.

2. Maintenance Practices

If the airplane is struck by lightning, inspect for and document damage, then refer to the Epic E1000 Aircraft Structural Repair Manual, P/N SK05000010.

This Page Intentionally Left Blank

CHAPTER 52

Doors

This Page Intentionally Left Blank

List of Effective Pages

Chapter/Section	Page Number	Effective Date
52-Title	Page 1	02 Jan 2020
52-Title	Page 2	02 Jan 2020
52-LOEP	Page 1	08 Sep 2026
52-LOEP	Page 2	08 Apr 2024
52-TOC	Page 1	02 Jan 2020
52-TOC	Page 2	02 Jan 2020
52-00	Page 1	10 Jul 2025
52-00	Page 2	02 Jan 2020
52-10	Page 1	16 May 2022
52-10	Page 2	08 Sep 2026
52-10	Page 3	02 Jan 2020
52-10	Page 4	02 Jan 2020
52-10	Page 5	16 May 2022
52-10	Page 6	02 Jan 2020
52-10	Page 7	16 May 2022
52-10	Page 8	02 Jan 2020
52-10	Page 9	02 Jan 2020
52-10	Page 10	16 May 2022
52-10	Page 11	08 Sep 2026
52-10	Page 12	02 Jan 2020
52-10	Page 13	02 Jan 2020
52-10	Page 14	02 Jan 2020
52-10	Page 15	02 Jan 2020
52-10	Page 16	14 Jul 2021
52-10	Page 17	14 Jul 2021
52-10	Page 18	02 Jan 2020
52-10	Page 19	11 Nov 2020
52-10	Page 20	08 Sep 2026
52-10	Page 21	11 Nov 2020
52-10	Page 22	11 Nov 2020
52-10	Page 23	11 Nov 2020
52-10	Page 24	11 Nov 2020
52-10	Page 25	16 May 2022
52-10	Page 26	08 Apr 2024
52-10	Page 27	08 Apr 2024
52-10	Page 28	08 Sep 2026
52-10	Page 29	08 Apr 2024
52-10	Page 30	10 Jul 2025
52-10	Page 31	08 Apr 2024
52-10	Page 32	08 Apr 2024

52-10 ..... Page 33 ..... 08 Apr 2024
52-10 ..... Page 34 ..... 08 Apr 2024
52-10 ..... Page 35 ..... 08 Apr 2024
52-10 ..... Page 36 ..... 08 Apr 2024
52-10 ..... Page 37 ..... 08 Apr 2024
52-10 ..... Page 38 ..... 08 Apr 2024
52-10 ..... Page 39 ..... 08 Apr 2024
52-10 ..... Page 40 ..... 08 Apr 2024
52-10 ..... Page 41 ..... 08 Apr 2024
52-10 ..... Page 42 ..... 08 Apr 2024
52-10 ..... Page 43 ..... 08 Apr 2024
52-10 ..... Page 44 ..... 08 Apr 2024
52-10 ..... Page 45 ..... 08 Apr 2024
52-10 ..... Page 46 ..... 08 Apr 2024

52-20 ..... Page 1 ..... 08 Apr 2024
52-20 ..... Page 2 ..... 20 Oct 2023
52-20 ..... Page 3 ..... 20 Oct 2023
52-20 ..... Page 4 ..... 20 Oct 2023
52-20 ..... Page 5 ..... 20 Oct 2023
52-20 ..... Page 6 ..... 20 Oct 2023
52-20 ..... Page 7 ..... 20 Oct 2023
52-20 ..... Page 8 ..... 20 Oct 2023
52-20 ..... Page 9 ..... 20 Oct 2023
52-20 ..... Page 10 ..... 20 Oct 2023

Table of Contents

List of Effective Pages ..... 52-LOEP / Page 1
Table of Contents ..... 52-TOC / Page1

Paragraph **Page Number**

Doors

1. General ..... 52-00 / Page 1
2. Tools ..... 52-00 / Page 1

Passenger/Crew Door

1. Description ..... 52-10 / Page 1
2. Maintenance Practices ..... 52-10 / Page 1
   - A. Support Cable ..... 52-10 / Page 1
   - B. Gas Strut ..... 52-10 / Page 2
   - D. Door ..... 52-10 / Page 7
   - E. Door Hinge ..... 52-10 / Page 10
   - F. Door Open Annunciation Microswitches ..... 52-10 / Page 11
   - G. Latch Plate ..... 52-10 / Page 13
   - H. Steps ..... 52-10 / Page 15
   - I. Finish Panels ..... 52-10 / Page 16
   - J. Latch Pin Rigging ..... 52-10 / Page 19
   - K. Door Seal System ..... 52-10 / Page 25
   - L. Door Handle ..... 52-10 / Page 38
   - M. Lock Assembly ..... 52-10 / Page 38
   - N. Door Handle Mechanism ..... 52-10 / Page 40
   - O. Door Depressurization Switch ..... 52-10 / Page 43
   - P. Insulation ..... 52-10 / Page 43
   - Q. Sound Damper ..... 52-10 / Page 45

Emergency Door

1. Description ..... 52-20 / Page 1
2. Maintenance Practices ..... 52-20 / Page 1
   - A. Emergency Exit Door ..... 52-20 / Page 1
   - B. Release Cable ..... 52-20 / Page 4

This Page Intentionally Left Blank

DOORS

1. General

This airplane has a single passenger/crew door and a single emergency exit door.

The passenger/crew door has a door latch mechanism, steps, a window, and an inflatable door seal that is mounted on the fuselage.

A single emergency exit door is located across from the passenger/crew door for emergency evacuation of the airplane. This door has two door latch mechanisms, a window, and a rubber door seal mounted on the fuselage.

K003-K085 (except K014), refer to the current revision of the E1000 Wiring Manual, P/N SK05000002.

K014, K086 and on, refer to the current revision of the E1000 Wiring Manual, P/N SK05003002.

2. Tools

Table 52-00.1: Special tools

Item	Part Number	Supplier
Scraper (non-metal)	-	Any
Pressure Gauge, 0 to 30 psi, calibrated	-	Any

This Page Intentionally Left Blank

PASSENGER/CREW DOOR

1. Description

The passenger/crew door is a carbon composite structure with an integrally bonded polycarbonate window. The door is hinged at the bottom where it is attached to the airplane fuselage. Three steps attached to the door assist occupant entry and exit of the airplane. A combination of push rods and pins firmly latch and secure the door in the closed position. An inflatable seal around the door frame seals the gap between the door and the frame for cabin pressurization.

In the open position the door is supported by two cables and two gas struts. The extended gas struts provide retraction force to help support and lift the door when it is being closed.

2. Maintenance Practices

A. Support Cable

Removal and installation procedures for both cables are similar.

(1) Removal

(a) Open the cabin door.

(b) Support the cabin door with a solid surface that will not damage the exterior finish that puts a slight slack in the cables.

(c) Disconnect the cable from the attachment bracket on the fuselage.

(d) Disconnect the cable from the attachment bracket on the door.

(2) Installation

(a) Connect the cable to the attachment bracket on the door.

(b) Lubricate the inside bore of the fuselage bracket using Loctite™ 36781 grease.

(c) Connect the cable to the attachment bracket on the fuselage.

(d) Adjust the turnbuckle on the cable to adjust cable length so the entry steps are level ± 5° to horizontal. Maintain equal tension in both cables.

(e) Verify the door is correctly rigged.

(f) Close and latch the door.

B. Gas Strut

Removal and installation procedures for both struts are similar.

(1) Removal

(a) Install a padded clamp on the strut to prevent it from compressing when disconnected.

(b) Disconnect the strut from the attachment bracket on the fuselage.

(c) Disconnect the strut from the attachment bracket on the door.

(2) Installation

Note: If installing a new strut, extend the strut and install a padded clamp to keep the strut extended during installation.

(a) Connect the gas strut to the attachment bracket on the door.

(b) Lubricate the inside bore of the fuselage bracket using Loctite™ 8632 or Lubriplate No. 630-2 grease.

(c) Connect the gas strut to the attachment bracket on the fuselage.

(d) Remove the padded clamp.

(e) Verify correct operation of the door.

Figure 52-10.1: Gas Strut and Cable Attachment (Sheet 1 of 2)

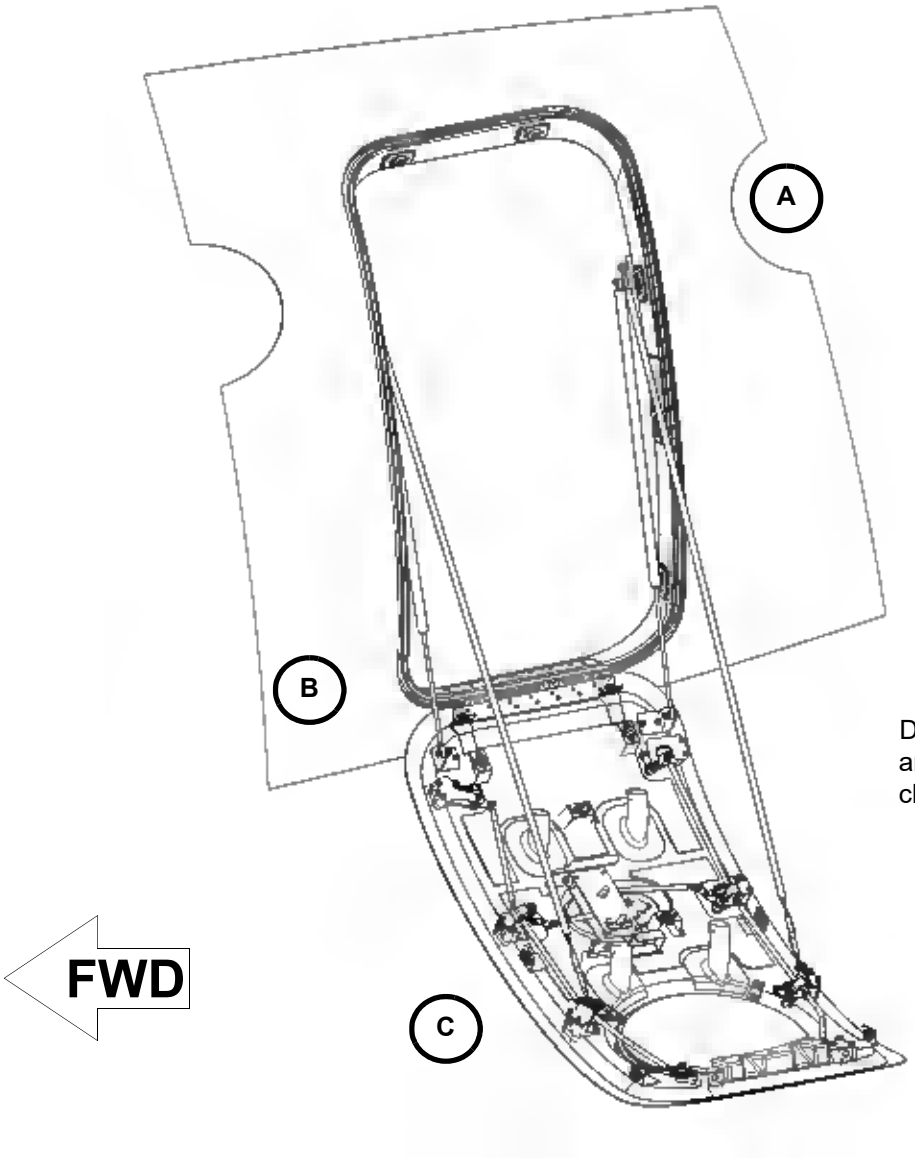

Door insulation, panels, and steps not shown for clarity.

Figure 52-10.1: Gas Strut and Cable Attachment (Sheet 2 of 2)

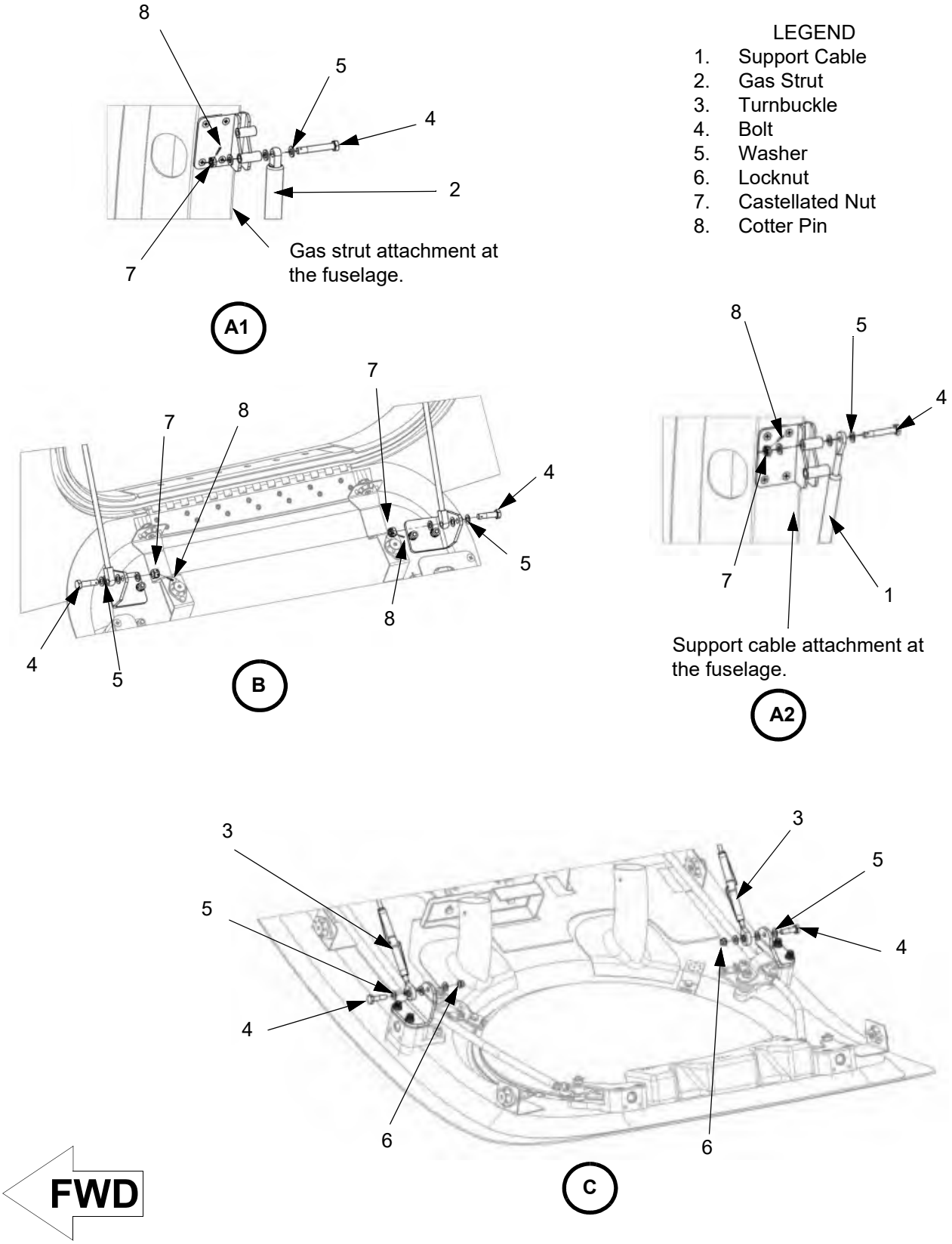

C. Gas Strut and Cable Attachment Bracket

(1) Removal

(a) Open the cabin door.

(b) Support the cabin door with a solid surface that will not damage the exterior finish that puts a slight slack in the cables.

(c) Install a padded clamp on the strut to prevent it from compressing when disconnected.

(d) Disconnect the gas strut and the cable from the attachment bracket on the fuselage.

(e) Remove the door interior finish panels.

(f) Remove the four screws, washers, and locknuts attaching the attachment bracket to the fuselage then remove the bracket.

(2) Installation

(a) Install the attachment bracket using four screws, washers, and locknuts.

(b) Install the door interior finish panels.

(c) Connect the gas strut to the attachment bracket. Lubricate the inside bore of the bracket using Loctite™ 36781 grease.

(d) Connect the cable to the attachment bracket. Lubricate the inside bore of the bracket using Loctite™ 36781 grease.

(e) Remove padded clamp from the strut.

(f) Adjust the turnbuckle on the cable to adjust cable length so the entry steps are level ± 5° to horizontal. Maintain equal tension in both cables.

(g) Verify correct operation of the door.

Figure 52-10.2: Gas Strut and Cable Attachment Brackets

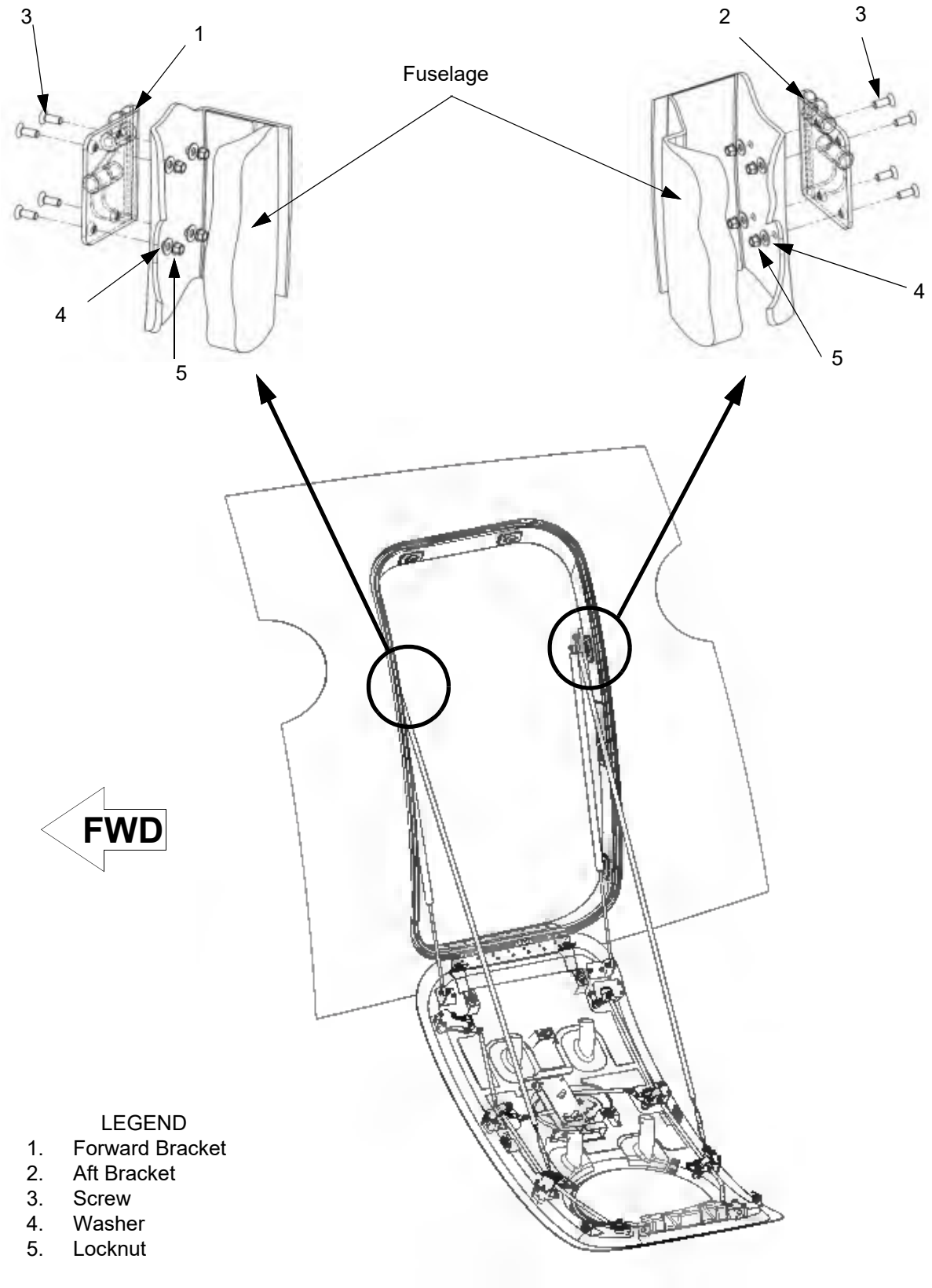

LEGEND
1. Forward Bracket
2. Aft Bracket
3. Screw
4. Washer
5. Locknut

D. Door

Two people are required for removal and installation of the door.

(1) Removal

(a) Enter the airplane.

(b) Carefully pull the door threshold finish panel upward to disengage the two dual lock re-closable fasteners. Remove the door threshold finish panel.

(c) Remove the passenger compartment carpet and floor. Refer to Chapter 25-20 and 53-20.

(d) Disconnect the electrical wiring harness.

(e) Disconnect the door seal vent tubing from the tubing connector near the floor rib.

(f) Disconnect the struts from the attachment brackets on the door (refer to 52-10 2.B(1).

(g) Disconnect the cables from the attachment brackets on the door (refer to 52-10 2.A(1).

(h) Carefully lower the door onto a suitable support that can hold the door approximately parallel to the ground. Protect the door from damage.

(i) Cut the safety wire on the door hinge pin then remove the hinge pin from the hinge.

(j) Remove the door from the airplane.

(k) Inspect the hinge and pin for wear and replace as necessary.

(2) Installation

(a) Support the door approximately parallel to the ground. Protect the door from damage.

(b) Align both sides of the door hinge together then insert the hinge pin.

(c) Install safety wire in both ends of the hinge to capture the hinge pin.

(d) Enter the cabin of the airplane.

(e) Connect the door seal vent tubing.

(f) Connect the electrical harness.

(g) Install the flooring and carpet. Refer to Chapter 25-20 and 53-20.

(h) Install the door threshold finish panel.

(i) Connect the struts to the attachment brackets on the door (refer to 52-10 2.B(1).

(j) Connect the cables to the attachment brackets on the door (refer to 52-10 2.A(1).

(k) Adjust the turnbuckles of the cables as required.

(l) Verify the door is correctly rigged.

(3) Inspection

(a) Remove the door interior and threshold finish panels.

(b) Inspect the latch pins, blocks, brackets, rod end attachment, push rods, jam nuts, springs, clevis pins, and levers for condition.

(c) Inspect screws, cotter pins, locknuts, and lock washers for security.

(d) Inspect the door handle and locking mechanism for condition and security.

(e) Inspect the door hinge pin and hinge halves for condition and security.

(f) Inspect door fit, latch pin insertion depths, and for smooth operation.

(g) Latch pins, latch plates, clevis pins, levers, hinges, and associated moving parts that have wear beyond 10% of the original thickness must be replaced.

(h) Bent or damaged clevis pins, levers, or latch pins must be replaced.

(i) Levers with clevis pins pressed in must be replaced if total moving play while assembled exceeds 0.125 inches.

(j) Cabin door hinge pin wear must not exceed 10% of the original thickness. Replace hinge pin or hinge half when beyond limits.

(k) Frayed or kinked cables must be replaced.

(l) Door struts that are bent, dented, or have depleted charge must be replaced.

(m) Bent or damaged cable attachment brackets or strut attachment brackets must be replaced.

Figure 52-10.3: Door to Fuselage Attachment

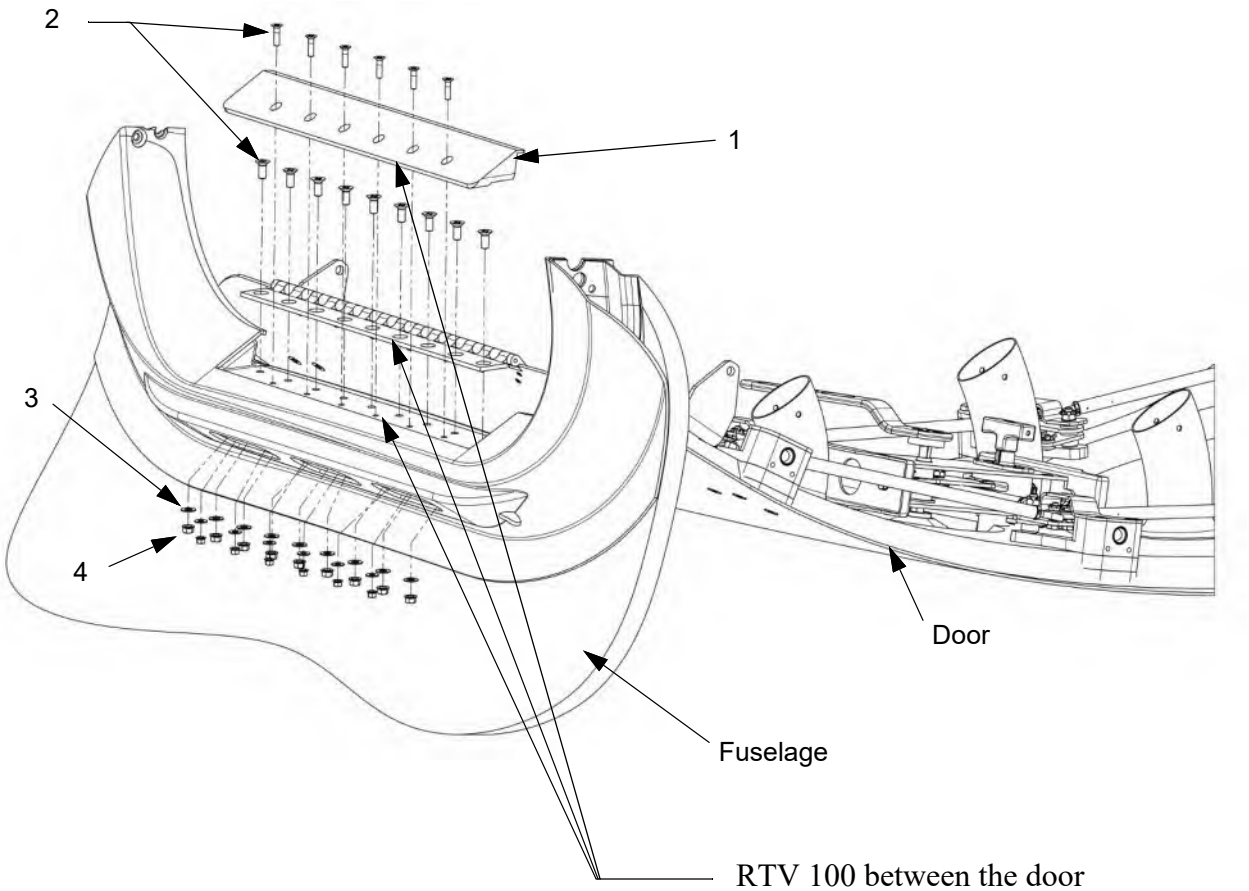

LEGEND

1. Door Sill
2. Screw
3. Washer
4. Locknut

E. Door Hinge

The cabin door hinge is two staggered hinge halves held together with a hinge pin. The hinge pin is safetied in place using safety wire. The door sill hinge half is attached using 6 screws and RTV 100. The cabin door hinge half is bonded using 9394 Hysol epoxy and riveted in place using 14 stainless steel solid rivets.

(1) Removal

(a) Remove the door from the airplane (refer to 52-10 2.D(1).

(b) Inspect the hinge and pin for wear and replace as necessary.

(c) Contact Epic Aircraft, LLC for instructions on cabin door hinge half replacement.

(2) Installation

(a) Installation is the reverse of removal.

(b) Verify fit with the door shut.

Figure 52-10.4: Door Hinge

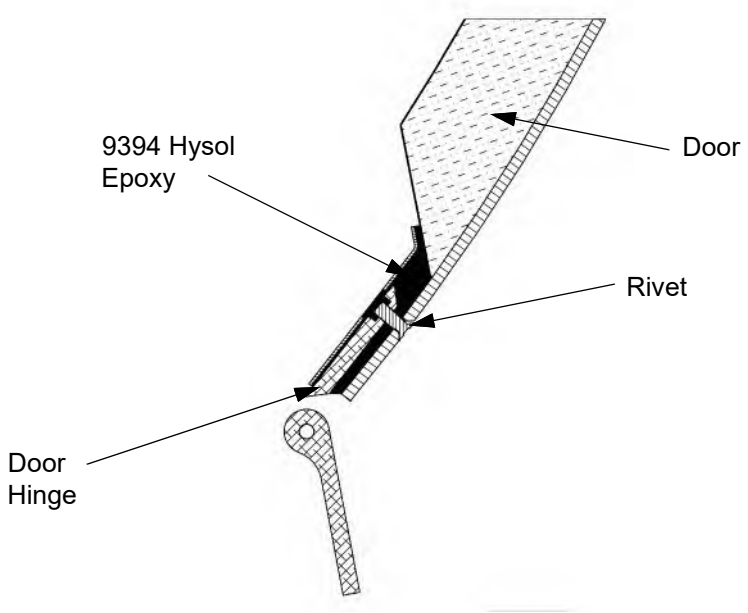

F. Door Open Annunciation Microswitches

Normally closed switches with actuator arms are around the perimeter of the door frame at every latch plate. When the door is closed and latched the latch pins extend across the microswitch actuator arms and open the circuit to the door open annunciation turning off the annunciation. The latch plate at the lower aft of the door has two microswitches, one of which turns on cabin lights when the door is unlatched. The cabin lights are on a nine minute timer.

(1) Removal

(a) Set the BATT 1 and BATT 2 switches to off.

(b) Remove the cabin door frame surround and interior finish panels, as necessary. Refer to Chapter 25-20.

(c) Disconnect the wiring harness from the microswitch to be removed.

(d) Remove the cap head screws and washers attaching the microswitch backing plate to the latch pin backing plate.

(e) Remove the microswitch from the microswitch backing plate.

(2) Installation

(a) Attach the microswitch to the microswitch backing plate.

(b) With the door pin fully engaged (full closed position) loosely install the microswitch plate assembly onto the corresponding backing plate assembly.

(c) Push the microswitch against the end of the door pin until the microswitch is made.

(d) Continue pushing the microswitch a minimum of 0.15” past the point that the switch is made.

Note: Make sure the switch does not bottom out at full pin engagement.

(e) Torque the microswitch mounting screws.

(f) Connect the wiring harness to the microswitch.

(g) Do the Operational Check.

(h) Install the cabin door frame surround and the interior finish panels. Refer to Chapter 25-20.

(3) Operational Check

(a) Set the BATT 1 and BATT 2 switches to ON.

(b) With the airplane on the ground, door seal off, and the door closed and locked verify there is no DOOR UNLOCKED CAS message.

(c) Move the door handle from the locked to the unlocked position. Make sure the DOOR UNLOCKED CAS message displays.

(d) Close and lock the door. Verify the DOOR UNLOCKED CAS message is extinguished.

(e) Set the BATT 1 and BATT 2 switches to off.

Figure 52-10.5: Microswitch

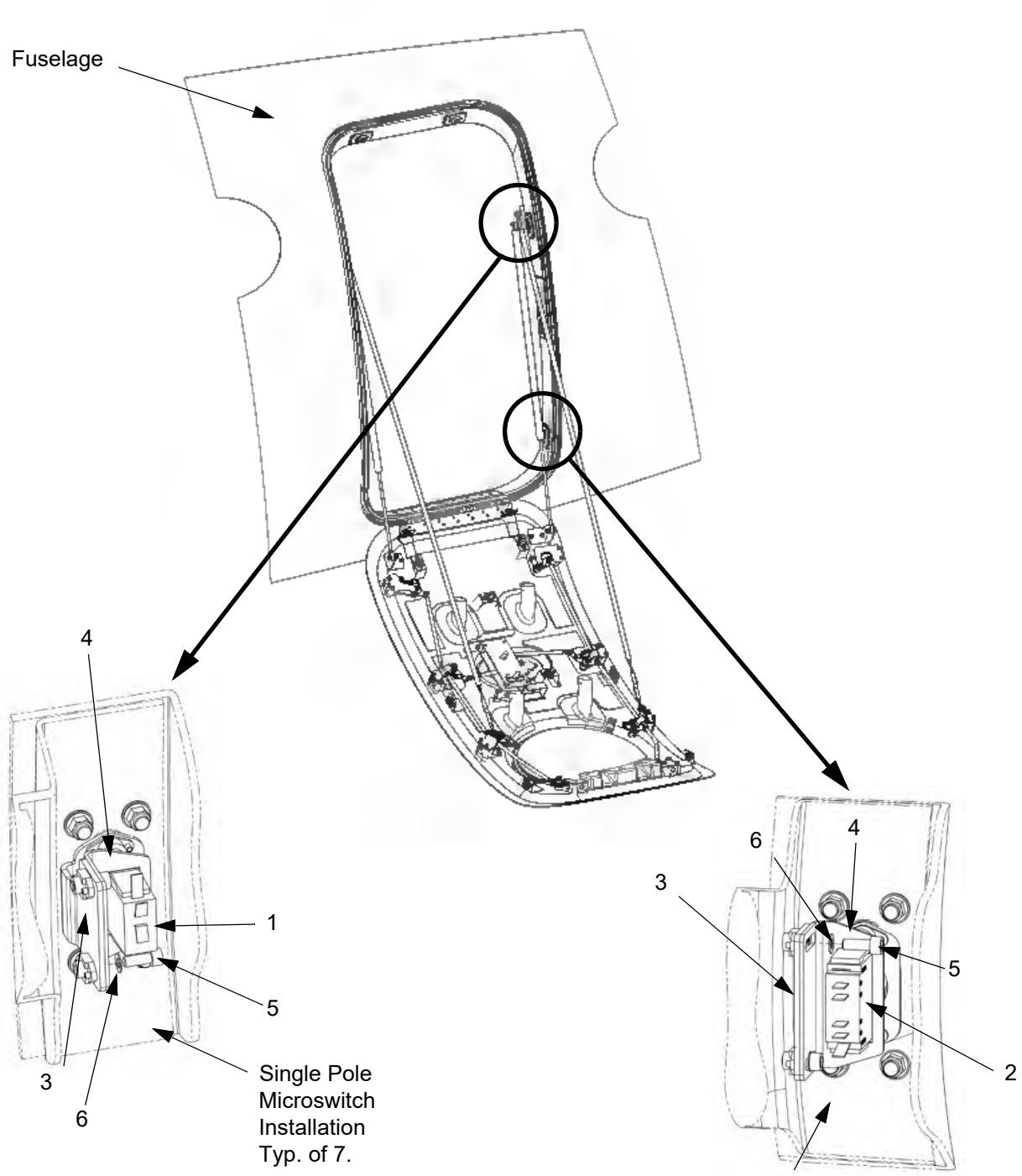

LEGEND

1. Microswitch, Single Pole
2. Microswitch, Double Pole
3. Door Pin Backing Plate
4. Microswitch Backing Plate
5. Screw, Socket Head
6. Washer

G. Latch Plate

Eight door latch plates are installed around the exterior of the door frame. The latch plates are made with vertical and horizontal knurling to help in alignment. Replace latch plates that are damaged or have latch pin seats that have worn or pulled out of round.

(1) Removal

(a) Remove the door frame surround finish panel.

(b) Before removing the damaged or worn latch plate, note the wear pattern or approximate location of the latch pin position.

(c) Put masking tape around the outer edge of the latch plate mating surface.

(d) Index the tape using a permanent marker to record the position of the latch pin.

(e) Remove the damaged latch plate.

(2) Installation

(a) Attach the new latch plate to the door frame with the latch pin hole centered on the index marks made on the masking tape.

(b) Carefully latch the door without using unnecessary or excessive force. If resistance is felt, open the door and adjust the plate until the door latches smoothly.

(c) Install the door frame surround finish panel.

Figure 52-10.6: Latch Plates

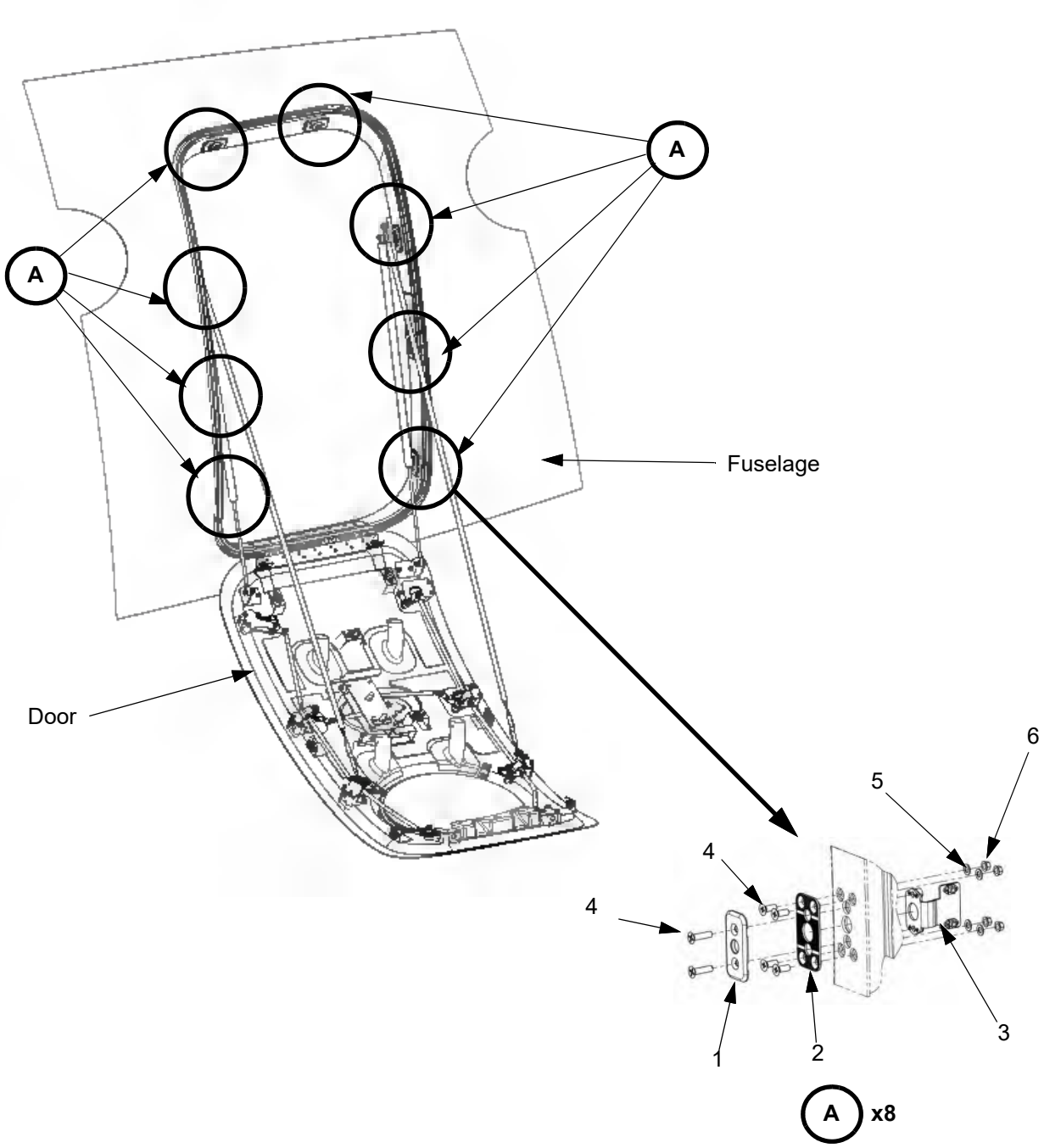

Note: Typical for all latch plate installations unless otherwise noted.

LEGEND
1. Receiver Plate
2. Plate
3. Backing Plate
4. Screw
5. Washer
6. Locknut

H. Steps

The door has three steps to aid in entering and leaving the airplane. Two of the steps are attached to pedestals using bolts, washers, and locknuts. The third step is attached to a platform using three washer head screws.

(1) Removal

(a) For the middle step and the step closest to the door hinge, remove the bolts, washers, and locknuts attaching the step to the pedestals.

(b) Carefully pull the step away from the support then disconnect the wiring harness to the step light.

(c) Remove the steps

(d) For the remaining step, carefully peel away the non-slip pad to access the washer head screws.

(e) Remove the screws.

(f) Carefully pull the step away from the support then disconnect the wiring harness to the step light.

(g) Remove the step.

(2) Installation

(a) Installation is the reverse of removal.

(b) Apply contact adhesive to the non-slip pad as necessary for re-installation.

(c) Torque the locknuts 17 to 21 in-lbs.

Figure 52-10.7: Steps

LEGEND
1. Step, Bottom
2. Step, Middle and Top
3. Washer Head Screw
4. Bolt
5. Washer
6. Locknut
7. Non-Slip Pad

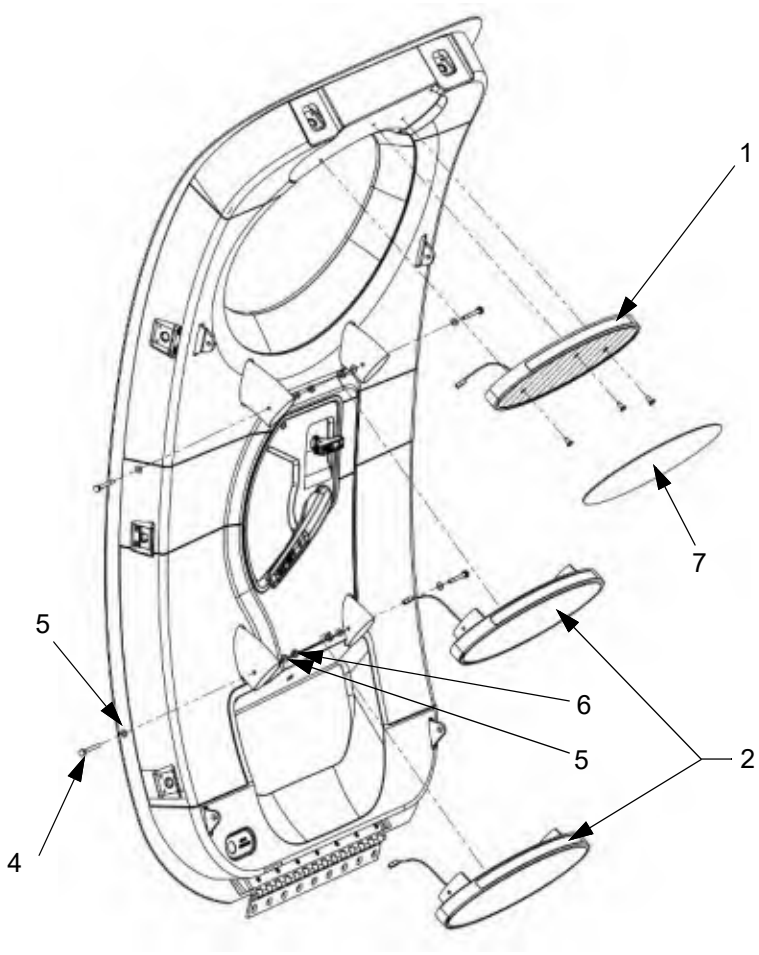

I. Finish Panels

The interior of the door is covered using four interior finish panels and a handle garnish which are attached to the door using washer head screws and dual lock re-closable fasteners.

(1) Removal

(a) Disconnect the struts from the attachment brackets on the door.

(b) Disconnect the cables from the attachment brackets on the door.

(c) Carefully lower the door onto a suitable support that can hold the door approximately parallel to the ground. Protect the door from damage.

(d) Remove hardware securing the steps to the door.

(e) Carefully lift the steps from the door.

(f) Disconnect the wiring harness from the step lights.

(g) Remove the steps.

(h) Unfasten the dual lock re-closable fasteners attaching the lower finish panel to the door then remove the panel.

(i) Remove the door latch T-handle and latch handle then remove the handle garnish.

(j) Remove the washer head screw and unfasten the dual lock re-closable fasteners attaching the middle finish panel to the door then remove the panel.

(k) Remove the three washer head screws and unfasten the dual lock re-closable fasteners attaching the upper finish panel to the door then remove the panel.

(l) Remove the six washer head screws and unfasten the dual lock re-closable fasteners attaching the side panel finish panel to the door then remove the panel.

(2) Installation

(a) Hold the side panel finish panel on the door then attach it using four washer head screws. Push against the panel to fasten the dual lock re-closable fasteners.

(b) Attach the lower finish panel and the bottom step to the door using three washer head screws. Push against the panel to fasten the dual lock re-closable fasteners.

(c) Attach the upper finish panel to the door using three washer head screws. Push against the panel to fasten the dual lock re-closable fasteners.

(d) Attach the middle finish panel to the door using one washer head screws. Push against the panel to fasten the dual lock re-closable fasteners.

(e) Attach the handle garnish using one washer head screw.

(f) Install the door latch T-handle and latch handle.

(g) Install the remaining two steps.

(h) Connect the wiring harness to the step lights.

(i) Connect the cables to the attachment brackets on the door.

(j) Connect the struts to the attachment brackets on the door.

(k) Verify the door is correctly rigged.

(l) Close and latch the door.

Figure 52-10.8: Door Finish Panels

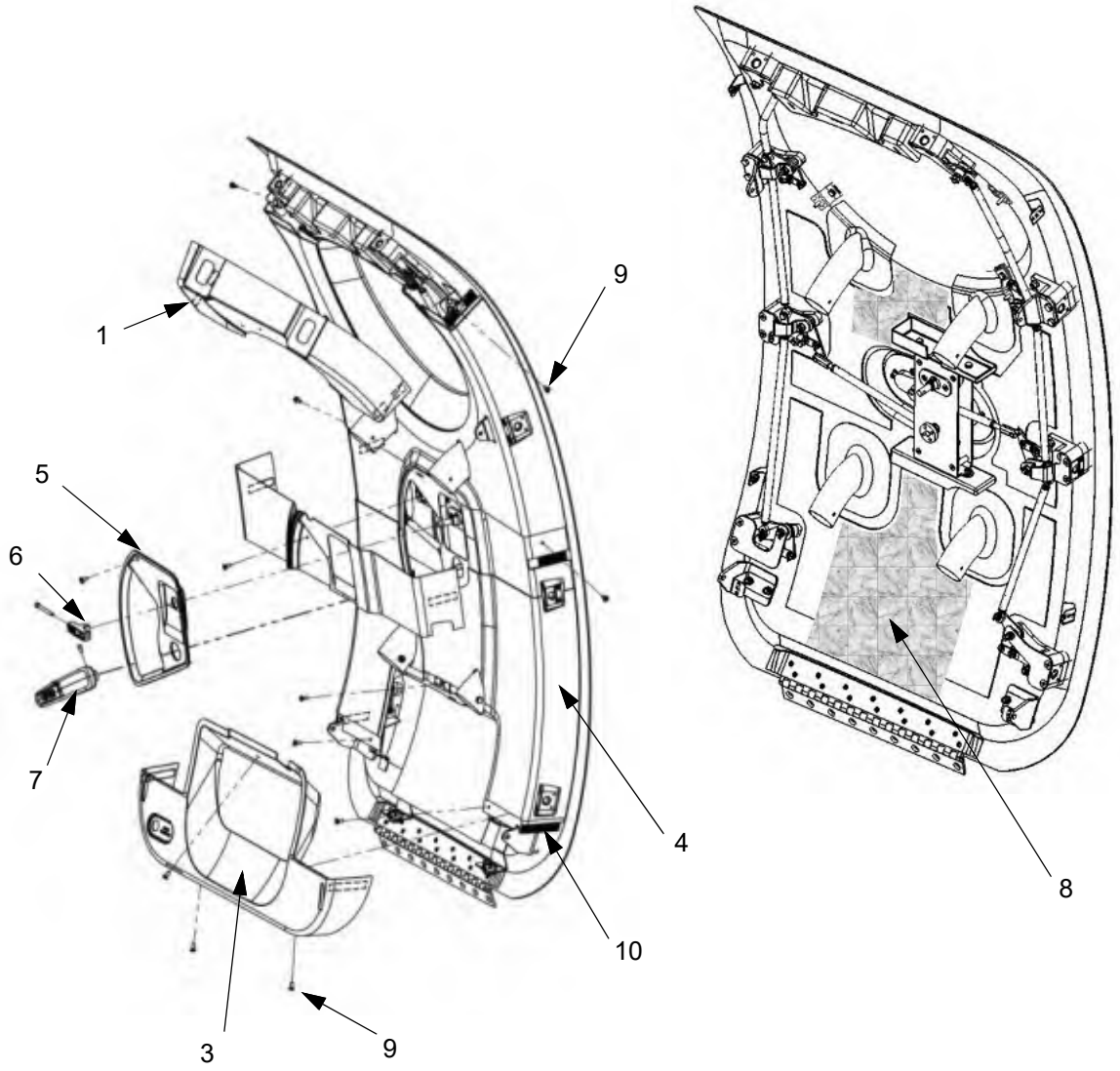

LEGEND

1. Lower Finish Panel
2. Middle Finish Panel
3. Upper Finish Panel
4. Side Panel Finish Panel
5. Handle Garnish
6. T-Handle
7. Handle
8. Insulation
9. Washer Head Screw
10. Dual Lock Re-Closable Fastener

J. Latch Pin Rigging

The door uses eight adjustable door pins which extend into the door frame through adjustable latch plates. Push pull rods adjust the extension of the pins and the rods are locked in place using jam nuts. Whenever new parts are installed on the door latching system inspect the rigging of the latch pins.

Note: Replace any worn or damaged parts before adjusting the door rigging.

(1) Remove the door finish panels.

(2) Make sure the receiver plates are adjusted so the pins move easily without binding and there isn't excessive movement of the door when the latch pins engage the receiver plates.

(3) Calculate required pin extensions, refer to table 52-10.1:

CAUTION: Closing the door with the door handle in the latched position will result in damage to the door frame.

(a) With the door open, fully extend the door latch pins.

(b) Measure the extension of the pins from the tip of the pin to the face of the latch pin assembly. Record this as "Pin Extension from Door" (A).

(c) Retract the latch pins then close and latch the door.

(d) Measure the gap between the face of the receiver plate and the face of the latch pin assembly. Record this as "Door to Receiver Plate Gap" (B).

(e) Add the "Minimum Engagement" (C) value from table 52-10.1 to the measured "Door to Receiver Plate Gap" (B) to determine the "Required Minimum Pin Extension from Door" (D) dimension (B + C = D).

(f) Open the door and adjust the pushrods so "Pin Extension from Door" (A) is equal to "Required Minimum Pin Extension from Door" (D).

(4) To adjust the door latch pin throw, do as follows:

CAUTION: Make sure the pushrods do not contact any door structure or adjacent hardware throughout their travel.

Note: Always begin adjustment with the middle side pins. Adjusting the push-rods connected to the door handle will effect all of the pins.

(a) For straight pushrods: Remove the safety wire from the jam nuts. Loosen the jam nuts on each end of the pushrod then rotate the rod to retract or extend the pins as required.

(b) For curved pushrods: Disconnect the rod ends from the latch assemblies. Remove the safety wire from the jam nuts. Loosen the jam nuts and rotate the rod ends as needed. Reconnect the rod ends to the latch assemblies and install cotter pins as necessary.

(5) Close and latch the door.

(6) Make sure the door handle operates smoothly without binding and fully latches.

(7) After adjustments are made, ensure that all latch pins still meet the required amount of engagement and threads are visible in the witness holes of the pushrods.

(8) Adjust the microswitches as needed. Refer to 52-10(2)(F).

(9) Ensure the inside bore of the latch assemblies and the latch pins are thoroughly coated with Loctite™ 8632 or Lubriplate No. 630-2 grease.

(10) Test operation of the door to ensure that it closes properly without binding. Re-adjust plates and pins as required.

(11) Tighten the jam nuts and install safety wire as necessary.

(12) Install the door finish panels.

Table 52-10.1: Latch Pin Engagement

Location	Pin Extension from Door (A)	Door to Receiver Plate Gap (B)	Minimum Engagement (C)	Required Minimum Pin Extension from Door (D)
Pin 1 (Aft Lower)			0.776”	
Pin 2 (Aft Mid)			0.776”	
Pin 3 (Aft Upper)			0.776”	
Pin 4 (Top Aft)			0.770”	
Pin 5 (Top Forward)			0.776”	
Pin 6 (Forward Upper)			0.945”	
Pin 7 (Forward Mid)			0.752”	
Pin 8 (Forward Lower)			0.776”	

Figure 52-10.9: Latch Pin Adjustment (Sheet 1 of 4)

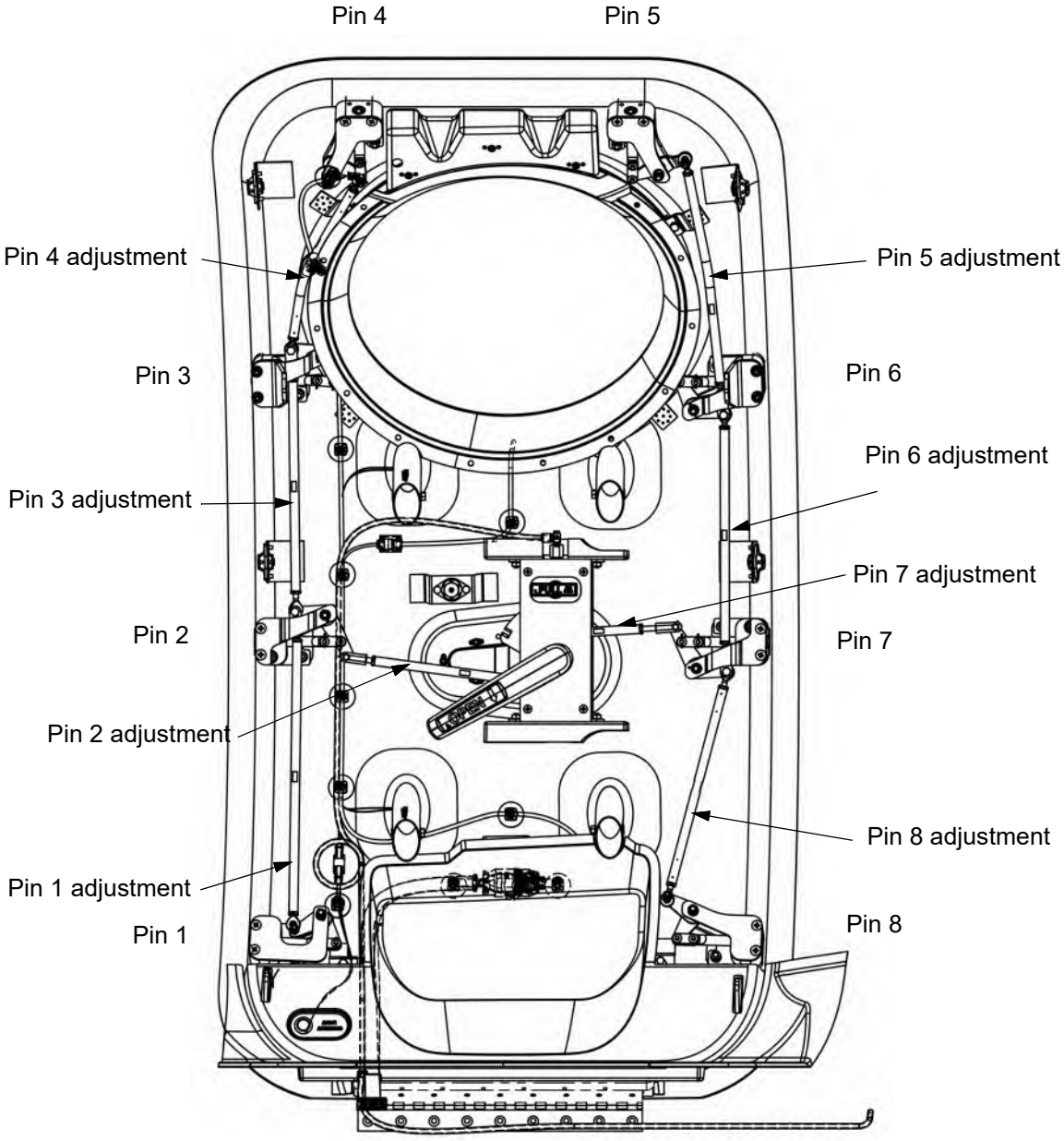

Figure 52-10.9: Latch Pin Adjustment (Sheet 2 of 4)

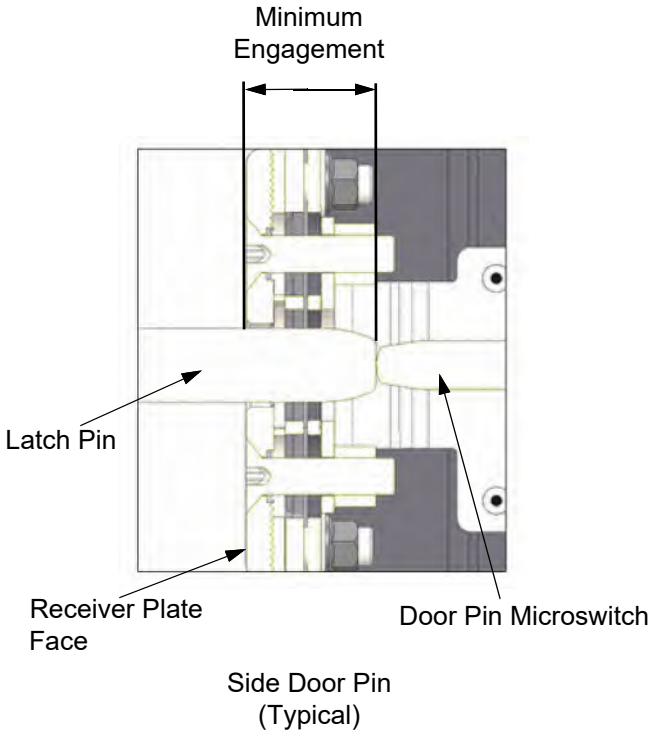

Side Door Pin
(Typical)

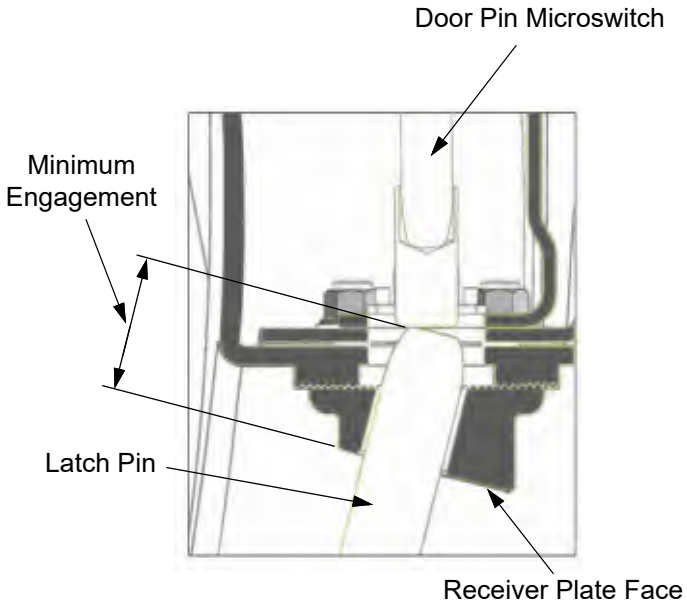

Top Door Pin
(Typical)

Figure 52-10.9: Latch Pin Adjustment (Sheet 3 of 4)

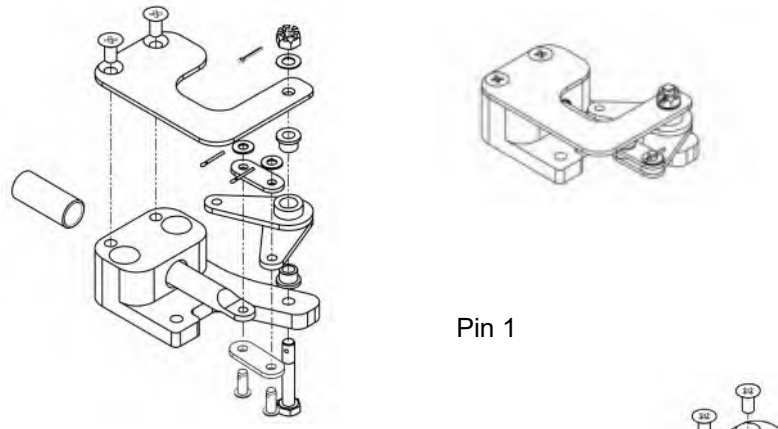

Pin 1

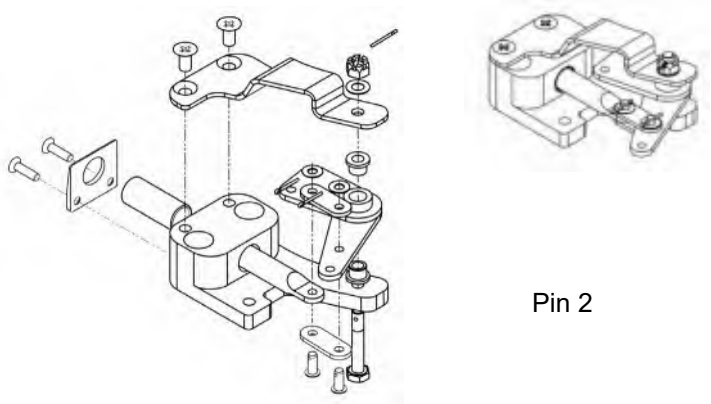

Pin 2

Tighten the nut until all play between the nut, bolt, and washer is removed. Continue tightening the nut an additional half turn then install the cotter pin. Ensure the door pin mechanism operates freely. If necessary, loosen the nut until the cotter pin can be fully installed. Re-verify there is no play between the nut, bolt, and washer after final installation.

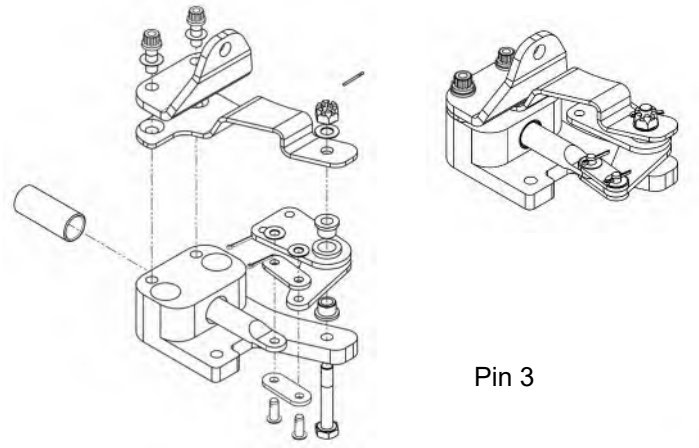

Pin 3

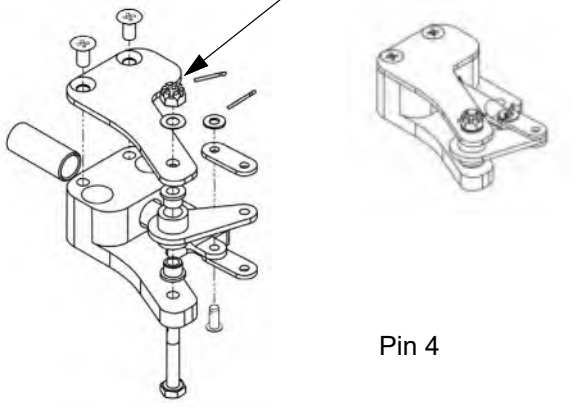

Pin 4

NOTE:

For all latches except as otherwise indicated.

Tighten the castellated nut until all play is removed from the bolt and the cam weldment rotates freely. if the cotter pin cannot be inserted, continue tightening until the cotter pin can be fully installed. Verify the cam weldment rotates freely. If binding is present, loosen the castellated nut until the cotter pin can be fully installed with the least amount of play in the bolt.

Figure 52-10.9: Latch Pin Adjustment (Sheet 4 of 4)

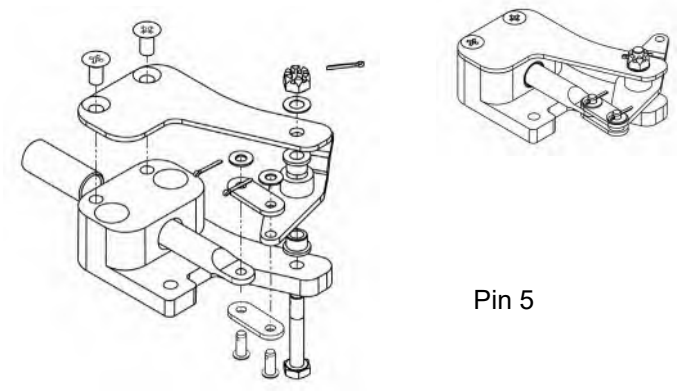

Pin 5

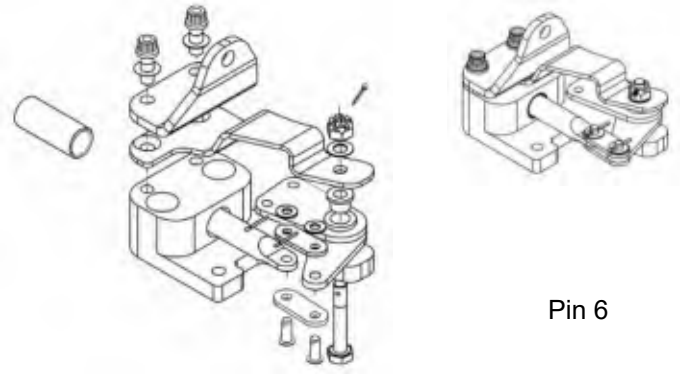

Pin 6

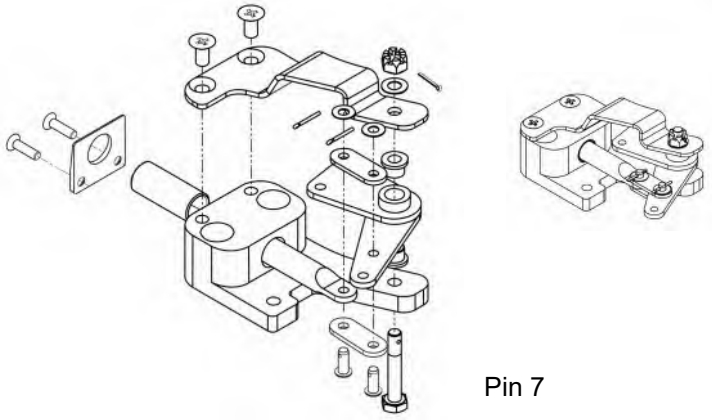

Pin 7

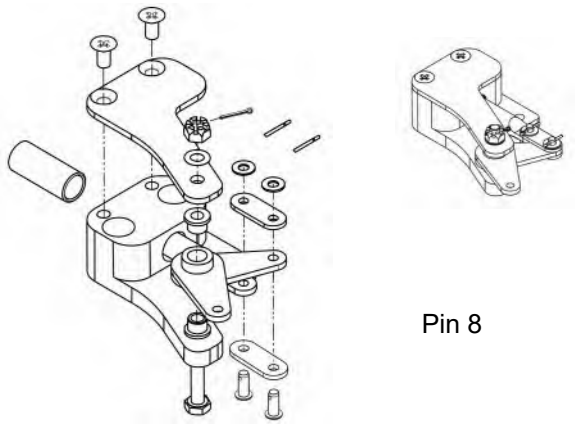

Pin 8

K. Door Seal System

(1) Door Seal

The door seal is an assembly of two seals. An inflatable seal overlapped by a passive seal. The seal is attached to the door frame using RTV 100 sealant/adhesive.

(a) Removal

(i) Open the door.

(ii) Disconnect the inflation tube of the inflatable seal from the air supply line.

(iii) Grab the seals then pull on a small section to break the bond of the adhesive holding the seals to the door frame.

(iv) Roll and pull the seals until they come off the door frame.

(v) Using a plastic or wooden scraper, remove as much of the adhesive as possible.

(vi) Remove the remainder of the adhesive using methyl propyl ketone.

(b) Installation

(i) Thoroughly wash and degrease the new seals.

(ii) Route the inflatable door seal inflation tube through the hole in the fuselage door joggle and the hole on the inside of the door surround.

(iii) Connect the inflation tube of the inflatable seal to the air supply line.

(iv) Completely coat the door joggle surface on the fuselage with RTV 100 sealant/adhesive then working from the inflation tube and in each direction outward, bond the inflatable seal to the door frame. Evenly adjust the tension along the length of the seal.

(v) Install the passive seal against the inflatable seal. The lower edge/surface of the passive seal is bonded against the face of the inside door joggle flange while the inside surface of the passive seal butts up against the inflatable seal. The flap of the passive seal must overlap the top of the inflatable seal.

(vi) If necessary, install a new hinge component door seal using double sided cloth tape (Nitto PN P-55 or P-55B). Seal the edges of the door seal hinge component with RTV 100.

Note: Make sure the passive seal slightly overlaps the hinge component door seal (refer to figure 52-10.10, sheet 6).

(vii) Make sure the flap of the passive seal does not get bonded and remains free and unobstructed.

(viii) Remove all excess RTV 100 from around the seals. Make sure there is no RTV on the face of the active seal.

(ix) Hold the seals in place using tape.

(x) Let the sealant fully cure (refer to the sealant manufacturer's instructions) then carefully remove all of the tape.

(c) Active Door Seal Repair

Small holes in the active door seal may be repaired using RTV 100 sealant/adhesive.

(i) Clean the area around the hole using isopropyl alcohol.

(ii) Apply RTV 100 over the hole and work it down into the puncture as much as possible.

(iii) Smooth the RTV to blend into the door seal in the repair area.

(iv) Allow the RTV 100 to cure in accordance with the manufacturer's instructions. Make sure the passive door seal does not contact the repair area on the active door seal before it fully cures.

(v) Perform the Adjustment/Test procedure for the Active Door Seal. Make sure no obvious leaks are present.

(2) Adjustment/Test of the door seals.

Note: It is permissible to attach pieces of polyurethane foam (PN PK52300008) to the passive door seal using RTV 100 to achieve an acceptable leak rate (refer to figure 52-10.10, sheet 6, detail F).

(a) Adjustment/Test - Active Door Seal.

(i) Connect shop air to the aircraft via the P3 air route prior to the solenoid shutoff valve (refer to Figure 52-10.10 sheet 1).

(ii) Set the BATT 1 and BATT 2 switches to ON

(iii) Ensure the DOOR SEAL circuit breaker is IN

(iv) Press the DOOR SEAL Switch, switch shall illuminate "DOOR SEAL ON".

(v) Close and lock the cabin door.

(vi) Turn on shop air to the aircraft for 1 minute.

(vii) Verify DOOR SEAL LOW CAS message is off.

(viii) Shutoff inflow and verify the DOOR SEAL LOW CAS message does not activate before a minimum 5 minutes has elapsed.

(ix) De-pressurize Door Seal.

(b) Adjustment/Test - Passive Door Seal.

(i) Connect external power (refer to 24-40).

(ii) Set the BATT 1 and BATT 2 switches to ON

(iii) Remove the upper engine cowling (refer to Chapter 71-10).

(iv) Connect a calibrated pressure gauge (0-10 psi) to the bulkhead fitting.

(v) Connect the dry compressed air source to the aircraft via the P3 air line, prior to the solenoid shutoff valve.

Note: It is recommended to configure the test setup in such a way that the pressure gauge can be viewed from the same location the pressure source is controlled.

(vi) Make sure the static ports are visually clear of any obstruction.

(vii) Pull the SPS COMP 1A, SPS COMP 1B, SPS COMP 2A, SPS COMP 2B, GEAR CONTROL, IGNITER, L PITOT HEAT, L PITOT HT CTRL, L STALL HEAT, R STALL HEAT, R PITOT HEAT, R PITOT HT CTRL and PUSHER circuit breakers.

(viii) Make sure the PRESS CTRL 1, PRESS CTRL 2, DOOR SEAL, and MASS FLOW circuit breakers are in.

(ix) Set the landing field elevation to -1000 ft.

(x) Set the left and right WOW switches to the in-the-air position to put the pressurization controller in flight mode.

(xi) Maintain this configuration for 2 minutes, or until the outflow valves are closed.

(xii) Set the PRESS CTRL 1 circuit breaker to OUT to remove power from the pressurization controller.

(xiii) Press the PRESS AIR switch. Make sure the switch illuminates PRESS AIR ON.

(xiv) Press the HI PRESS AIR switch. Make sure the switch illuminates HI PRESS AIR ON.

WARNING: No personnel are allowed inside the cabin while the aircraft is being pressurized for this test.

Note: Do not inflate the active cabin door seal for this test.

(xv) Close and lock the cabin door.

WARNING: Do not approach the cabin door during this test.

(xvi) Install a safety net or strap around the cabin door.

(xvii) Turn on the pressurization air source to the aircraft.

CAUTION: Do not exceed 6.7 psi when pressuring the aircraft.

Note: Minor popping and creaking sounds may be heard from the fuselage during this test.

(xviii) Pressurize the aircraft to 6.6 +/-.1 psi and allow it to stabilize.

(xix) Make sure 6.6 +/-.1 can be maintained for 5 minutes in this configuration.

(xx) Shut off the pressurization air source to the aircraft.

WARNING: Do not attempt to open the cabin door before the pressure inside the aircraft reaches zero.

(xxi) Allow cabin pressure to drop to zero.

(xxii) Remove the safety net/strap and open the cabin door.

(xxiii) Reset the SPS COMP 1A, SPS COMP 1B, SPS COMP 2A, SPS COMP 2B, GEAR CONTROL, IGNITER, L PITOT HEAT, L PITOT HT CTRL, L STALL HEAT, R STALL HEAT, R PITOT HEAT, R PITOT HT CTRL, PUSHER, and PRESS CTRL 1 circuit breakers.

(xxiv) Set the BATT 1 and BATT 2 switches to OFF.

(xxv) Disconnect external power (refer to 24-40).

(xxvi) Disconnect the pressurization air source from the aircraft and reconnect the bleed air line.

(xxvii) Perform a leak check of the bleed air line.

(xxviii) Install the upper engine cowling (refer to Chapter 71-10).

(3) Low Pressure Switch

(a) Removal

(i) Set the BATT 1 and BATT 2 switches to OFF.

(ii) Remove all external electrical power to the airplane (refer to Chapter 24-40).

(iii) Remove the carpet and flooring from the passenger compartment.

(iv) Disconnect the electrical harness from the low pressure switch.

(v) Disconnect the tubing from the inlet and outlet ports of the low pressure switch.

(vi) Loosen the loop clamp attaching the switch to the bracket then remove the switch.

(b) Installation

(i) Attach the low pressure switch to the bracket using a loop clamp.

(ii) Attach the tubing to the inlet and outlet ports of the low pressure switch.

Note: Seal all pipe threads using Loctite™ 567 or anti-seize PTFE tape conforming to A-A-58092-2-2.

(iii) Connect the electrical harness.

(iv) Verify operation of the door seal.

(v) Install the flooring and carpet of the passenger compartment.

(4) 3-Way 2-Position Solenoid Valve

(a) Removal

(i) Set the BATT 1 and BATT 2 switches to OFF.

(ii) Remove all external electrical power to the airplane (refer to Chapter 24-40).

(iii) Remove the passenger compartment carpet and flooring. Refer to Chapter 25-20 and 53-20.

(iv) Disconnect the electrical harness from the valve.

(v) Disconnect the tubing from the inlet and outlet ports of the valve.

(vi) Remove the bolts, washers, and locknuts attaching the valve to the bracket then remove the valve.

(b) Installation

(i) Attach the valve to the bracket using bolts, washers, and locknuts.

(ii) Attach the tubing to the inlet and outlet ports of the electronic valve.

Note: Seal all pipe threads using Loctite™ 567 or anti-seize PTFE tape conforming to A-A-58092-2-2.

(iii) Connect the electrical harness.

(iv) Verify operation of the door seal.

(v) Install the flooring and carpet of the passenger compartment. Refer to Chapter 25-20 and 53-20.

(5) 2-Way Solenoid Valve

(a) Removal

(i) Set the BATT 1 and BATT 2 switches to OFF.

(ii) Remove all external electrical power to the airplane (refer to Chapter 24-40).

(iii) Remove the passenger compartment carpet and flooring. Refer to Chapter 25-20 and 53-20.

(iv) Disconnect the electrical harness from the valve.

(v) Disconnect the tubing from the inlet and outlet ports of the valve.

(vi) Remove the bolts, washers, and locknuts attaching the valve to the bracket then remove the valve.

(b) Installation

(i) Attach the valve to the bracket using bolts, washers, and locknuts.

(ii) Attach the tubing to the inlet and outlet ports of the valve.

Note: Seal all pipe threads using Loctite™ 567 or anti-seize PTFE tape conforming to A-A-58092-2-2.

(iii) Connect the electrical harness.

(iv) Verify operation of the door seal.

(v) Install the flooring and carpet of the passenger compartment. Refer to Chapter 25-20 and 53-20.

(6) Pressure Regulator

(a) Removal

(i) Set the BATT 1 and BATT 2 switches to OFF.

(ii) Remove all external electrical power to the airplane (refer to Chapter 24-40).

(iii) Remove the carpet and flooring from the passenger compartment. Refer to Chapter 25-20 and 53-20.

(iv) Disconnect the electrical harness from the pressure regulator.

(v) Disconnect the tubing from the inlet and outlet ports of the pressure regulator.

(vi) Loosen the loop clamp attaching the pressure regulator and manifold to the bracket then remove them.

(vii) Unscrew the pressure regulator from the manifold as necessary.

(b) Installation

(i) Set the pressure regulator to a pressure of 24 psi ± 2 psi.

(ii) If separated, install the pressure regulator onto the manifold till flat then 1/4 to 3/4 turn.

(iii) Attach the pressure regulator to the bracket using a loop clamp.

(iv) Attach the tubing to the inlet and outlet ports of the pressure regulator.

Note: Seal all pipe threads using Loctite™ 567 or anti-seize PTFE tape conforming to A-A-58092-2-2.

(v) Connect the electrical harness.

(vi) Verify operation of the door seal.

(vii) Install the flooring and carpet of the passenger compartment. Refer to Chapter 25-20 and 53-20.

(7) System Tubing

(a) Removal

(i) Set the BATT 1 and BATT 2 switches to OFF.

(ii) Remove the right side middle passenger and the copilot seats. Refer to Chapter 25-10 and 25-20.

(iii) Remove the interior finish panel adjacent to the seats. Refer to Chapter 25-50.

(iv) Remove the carpet and flooring from the passenger compartment. Refer to Chapter 25-20 and 53-20.

(v) Disconnect then remove the tubing or fitting(s) requiring replacement.

(b) Installation

(i) Cut tubing to the length required.

(ii) At the tee fitting slide a tubing connection fitting onto the end of the tubing then attach the fitting to the tee.

Note: Seal all pipe thread joints using Loctite™ 567 or PTFE anti-seize tape.

(iii) At the pressure regulator, electronic valve, or low pressure switch slide the tubing end over the appropriate port.

(iv) Attach the tubing to the cable mount using an adjustable tie-down strap, as applicable.

(v) Torque worm clamps to 5 - 7 in-lbs.

(vi) Verify operation of the door seal.

(vii) Install the interior finish panel (Refer to Chapter 25-50).

(viii) Install the copilot and passenger seats. Refer to Chapter 25-10 and 25-20.

(ix) Install the flooring and carpet of the passenger compartment. Refer to Chapter 25-20 and 53-20.

Figure 52-10.10: Door Seal System (Sheet 1 of 6)

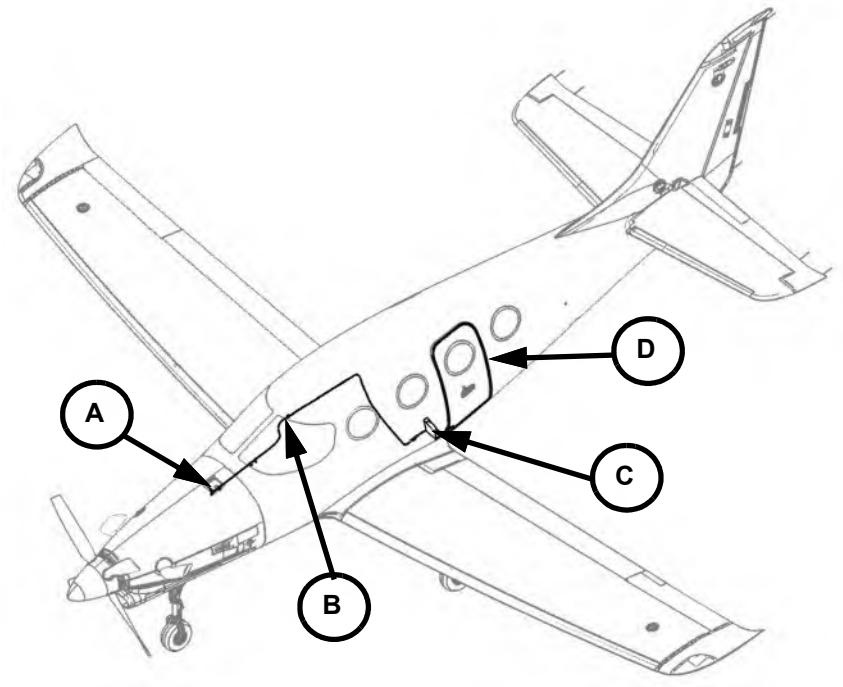

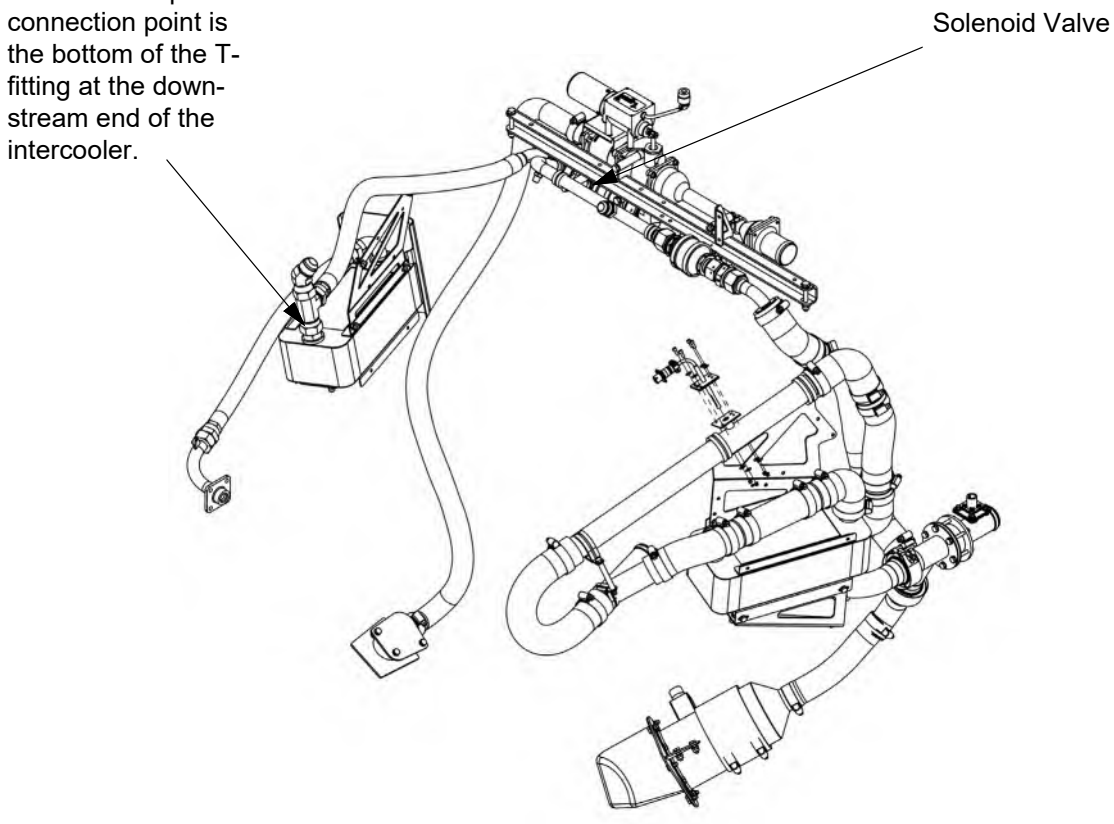

Figure 52-10.10: Door Seal (Sheet 2 of 6)

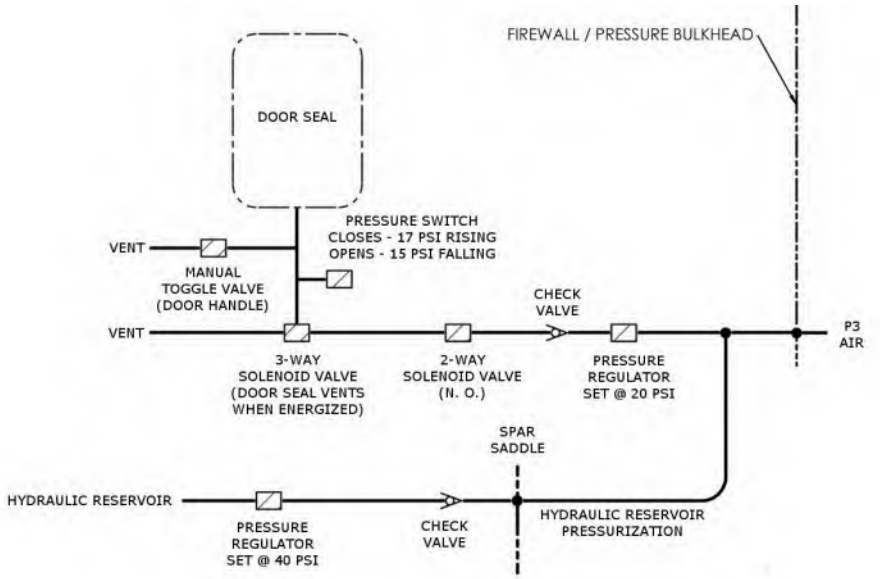

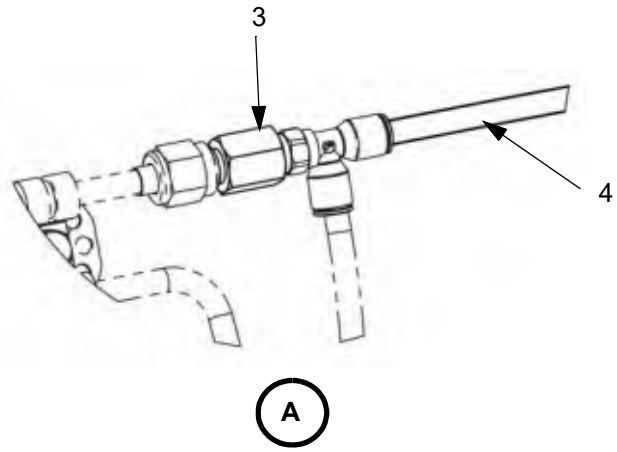

LEGEND
1. Standoff
2. Adjustable Strap
3. Tee Fitting
4. Tubing

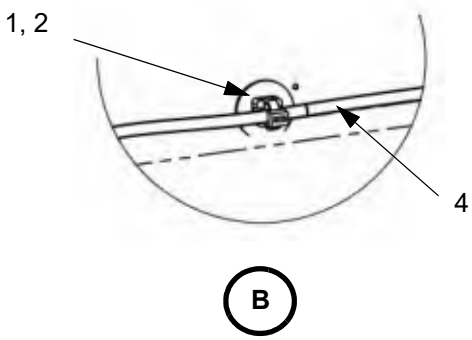

Figure 52-10.10: Door Seal (Sheet 3 of 6)

LEGEND
1. Tee Fitting
2. Tubing
3. Clamp

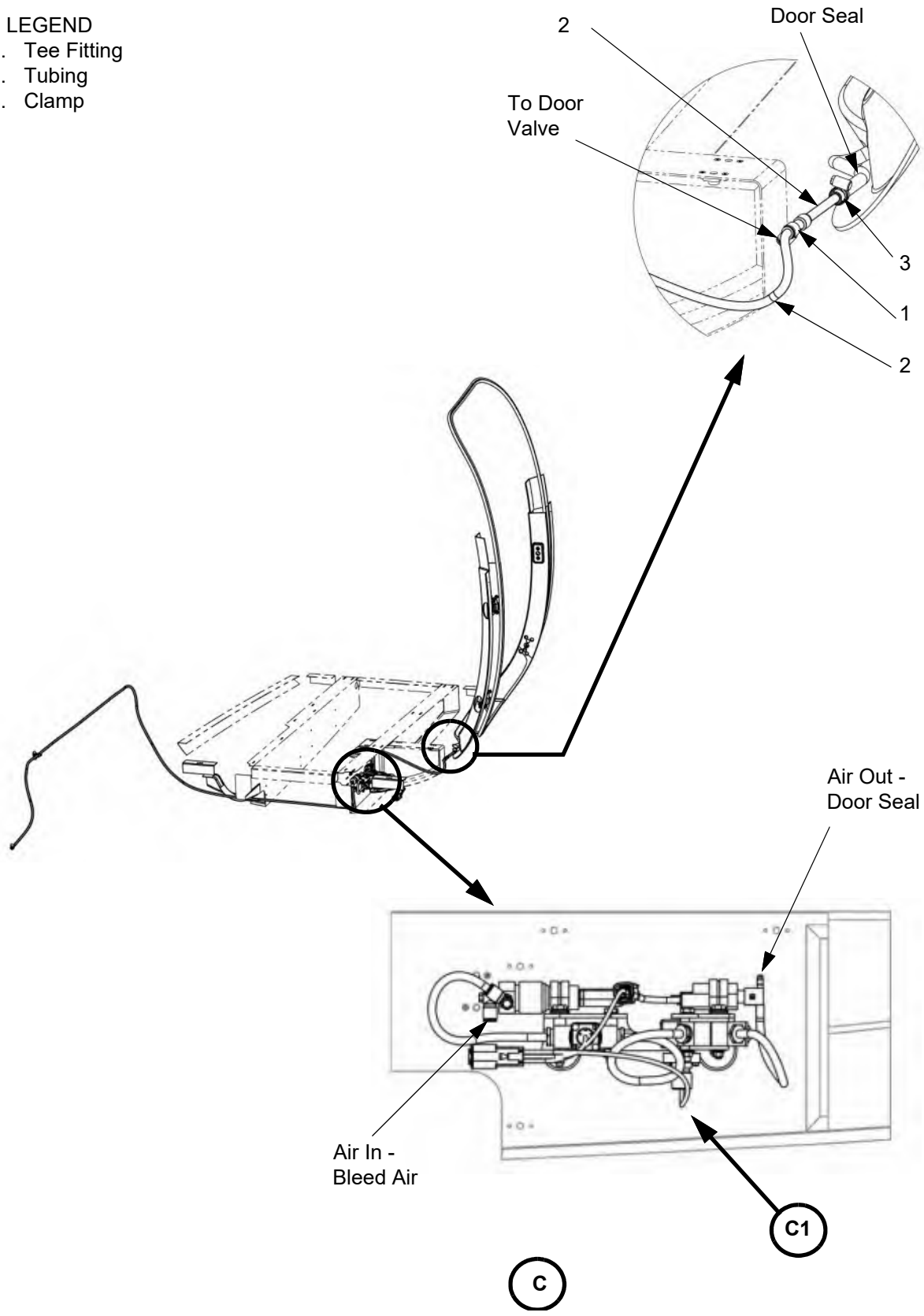

Figure 52-10.10: Door Seal (Sheet 4 of 6)

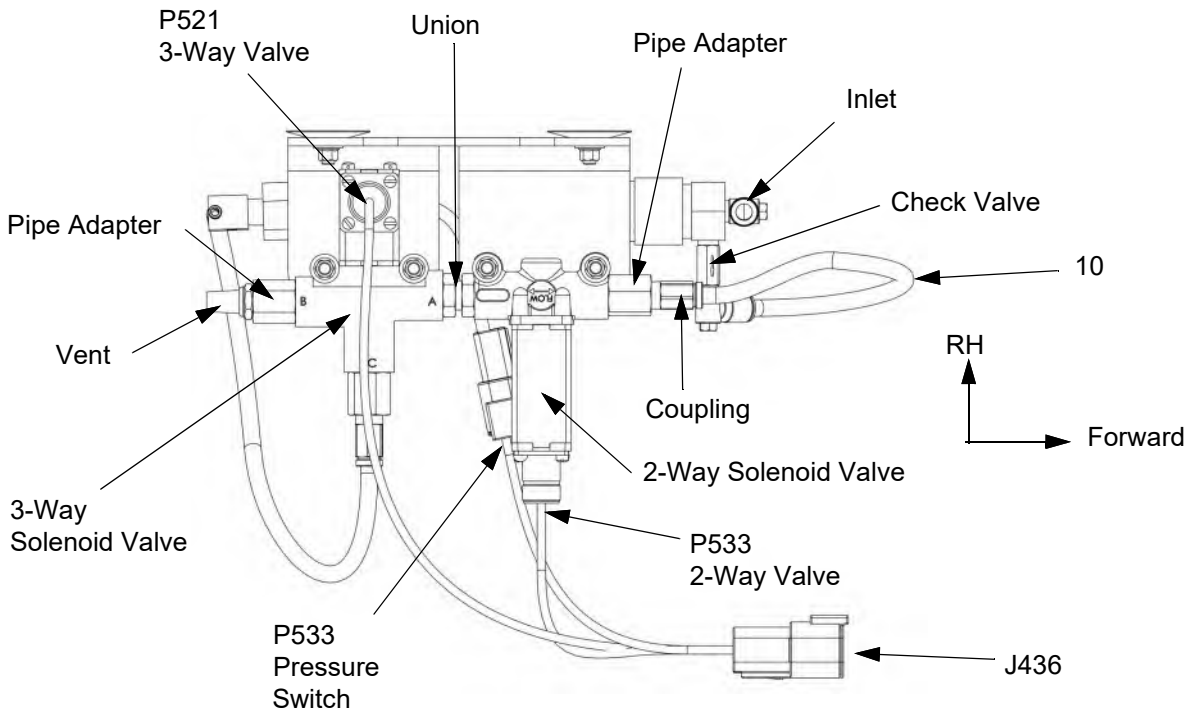

BOTTOM VIEW

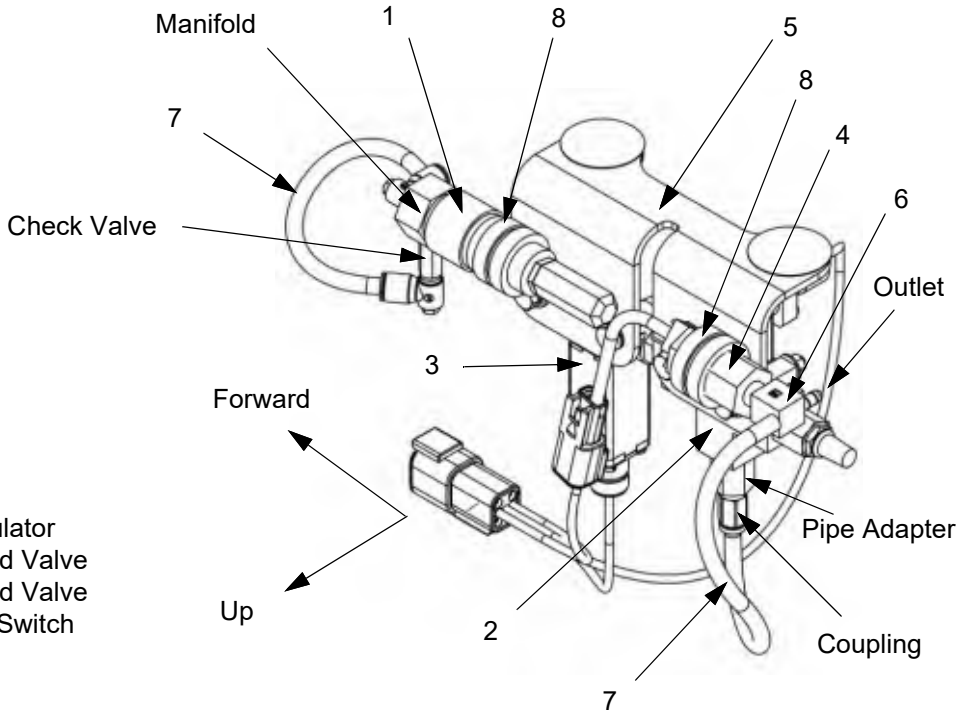

LEGEND
1. Pressure Regulator
2. 3-Way Solenoid Valve
3. 2-Way Solenoid Valve
4. Low Pressure Switch
5. Bracket
6. Tee Fitting
7. Tubing
8. Clamp

C1

Figure 52-10.10: Door Seal (Sheet 5 of 6)

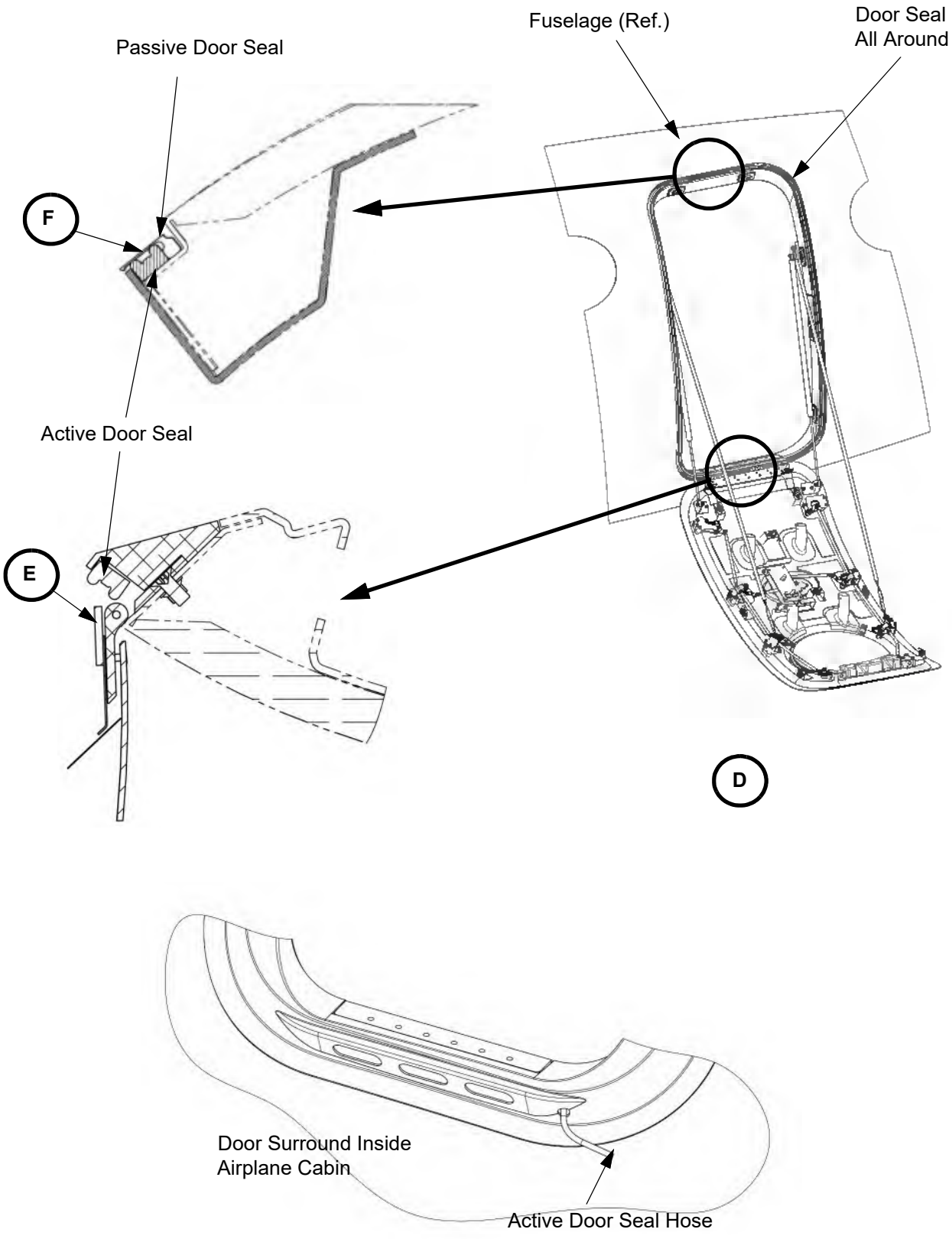

Figure 52-10.10: Door Seal (Sheet 6 of 6)

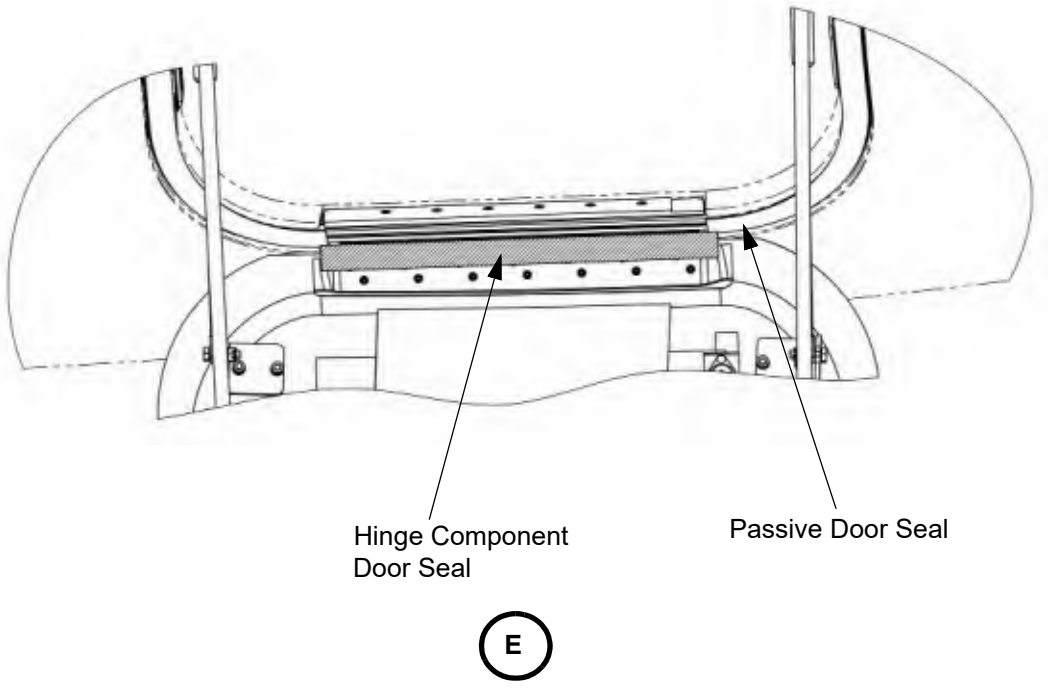

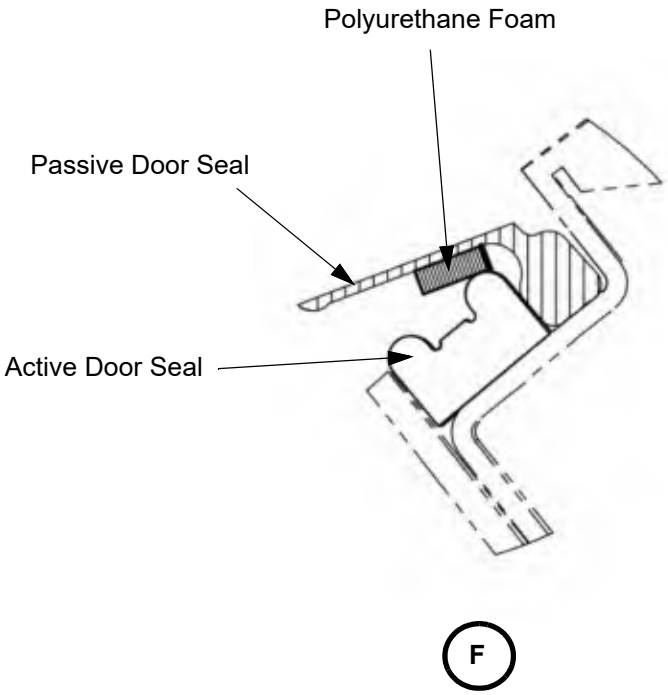

L. Door Handle

(1) Removal

(a) Remove the eight machine screws attaching the door handle housing to the interior plate.

(b) Remove the door handle.

(2) Installation

(a) Installation is the reverse of removal.

M. Lock Assembly

(1) Removal

CAUTION: The nut is attached to the cam lock using Loctite 272. If heat needs to be used to break the bond, remove the handle assembly from the door.

(a) Remove the nut that attaches the cam to the cam lock. Remove the cam.

(b) Remove the jam nut that attaches the cam lock to the door handle. Remove the cam lock.

(2) Installation

(a) Put the cam lock in position in the door handle.

(b) Install the jam nut that attaches the cam lock to the door handle. Torque the jam nut to 30-35 in-lbs.

Note: If installing a new lock assembly discard the internal lock washer.

(c) Put the cam in position on the cam lock. Make sure the tab is oriented vertically.

(d) Install the nut that attaches the cam to the cam lock using Loctite 272 in accordance with the manufacturers instructions. Torque the nut to 20-25 in-lbs.

Figure 52-10.11: Door Handle

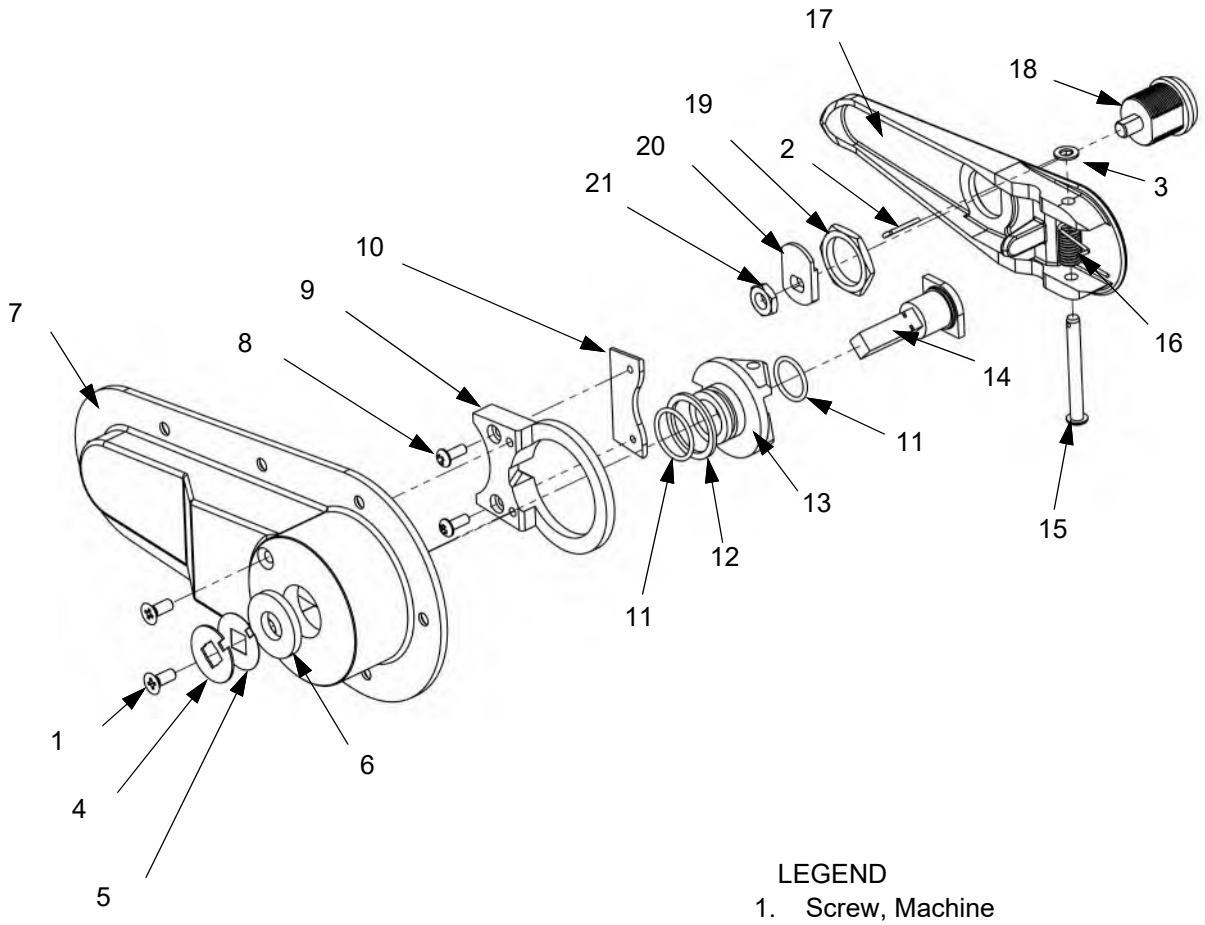

LEGEND

1. Screw, Machine
2. Cotter Pin
3. Washer, Reduced OD
4. Retainer, Top
5. Retainer, Bottom
6. Spacer
7. Handle Housing
8. Screw, Pan Head
9. Housing Insert
10. Insert Cap
11. O-Ring
12. Washer
13. Spindle Base
14. Spindle
15. Pin, Drilled Shank
16. Spring, Torsion
17. Handle
18. Cam Lock
19. Jam Nut
20. Cam
21. Nut

N. Door Handle Mechanism

(1) Removal

(a) Open the cabin door

(b) Remove the steps, refer to 52-10.2(H).

(c) Remove screw, lock washer, and washer that attach the interior door handle to the door locking mechanism. Remove the interior door handle.

(d) Remove screw that attaches the T-handle to the door locking mechanism. Remove the T-handle.

(e) Remove the interior panel from the door 52-10.2(I).

(f) Remove the cotter pins and clevis pins that attach the actuation pushrods to the latch pin linkage.

(g) Disconnect the line from the door seal depressurization valve.

(h) Remove the bolts, washers, and nuts that attach the door locking mechanism to the door.

(i) Carefully lift the door locking mechanism from the door while breaking the seal around the exterior unlocking button assembly.

(j) Clean any remaining sealant from the unlock button and the button seat in the door.

(2) Installation

(a) Apply sealant (CS3204 B-1/2 or AC350 B-1/2) around the perimeter of the unlock button where it seats in the door.

(b) Carefully put the door locking mechanism in position on the door center ribs then install the bolts, washers, and nuts.

(c) Wipe away excess sealant on the exterior of the door using acetone or isopropyl alcohol and clean paper towels.

(d) Attach the push rods to the latch pin linkage with the clevis pins and new cotter pins.

(e) Connect the line to the door seal depressurization valve.

(f) Install the interior panel on the door 52-10.2(I).

(g) Put the interior door handle in position on the door locking mechanism. Install the screw, lock washer, and washer.

(h) Put the interior T-handle in position on the door locking mechanism. Install the screw.

(i) Install the steps, refer to 52-10.2(H).

Note: Let the sealant around the unlock button fully cure (refer to the sealant manufacturer's instructions).

(j) Do a ground pressurization test and carefully inspect the seal around the unlock button for leakage.

Figure 52-10-12: Door Handle Mechanism (Sheet 1 of 2)

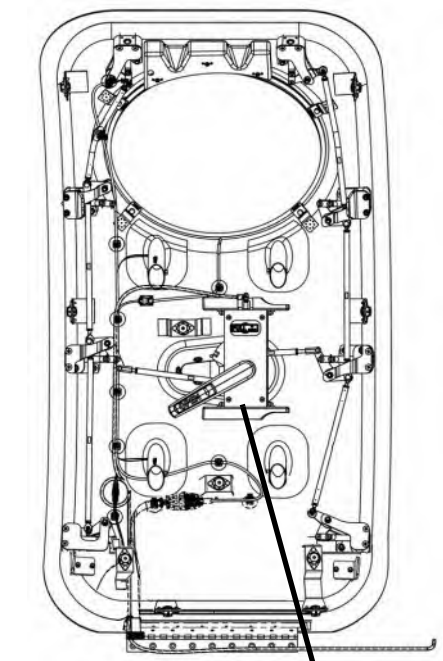

LEGEND

1. Interior Door Handle
2. T-Handle
3. Screw
4. Lock Washer
5. Washer
6. Door Locking Mechanism
7. Actuation Pushrods
8. Clevis Pin
9. Cotter Pin
10. Door Seal Depressurization Valve

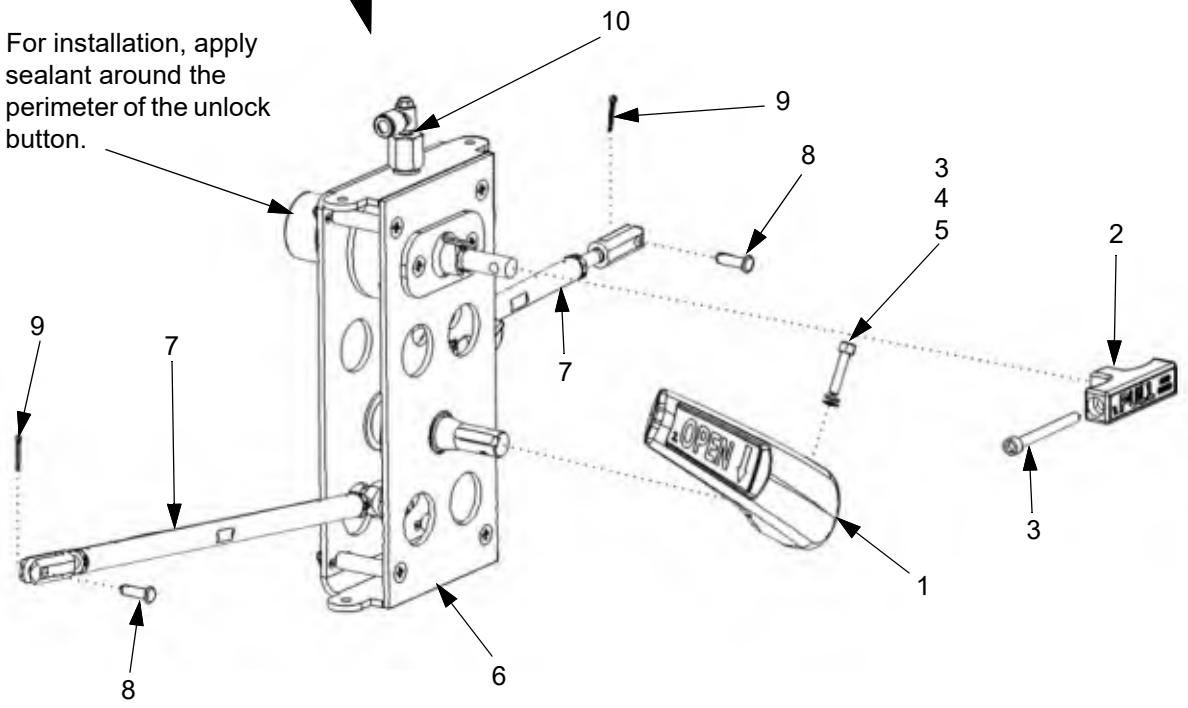

Figure 52-10.12: Door Handle Mechanism (Sheet 2 of 2)

LEGEND
1. T-Handle
2. Inner Actuator
3. Lock Plate
4. Guide
5. Bearing Block
6. Button Receiver
7. Depressurization Valve
8. Spring
9. Push Button
10. Cam
11. Large Bushing
12. Small Bushing
13. Handle Hub
14. Interior Handle
15. Spring Pin
16. Spacer
17. Screw, Socket Head
18. Screw, Machine
19. Bolt
20 Washer
21. Castellated Nut
22. Locknut
23. Cotter Pin
24. Inner Plate
25. Outer Plate
26. Banjo Fitting

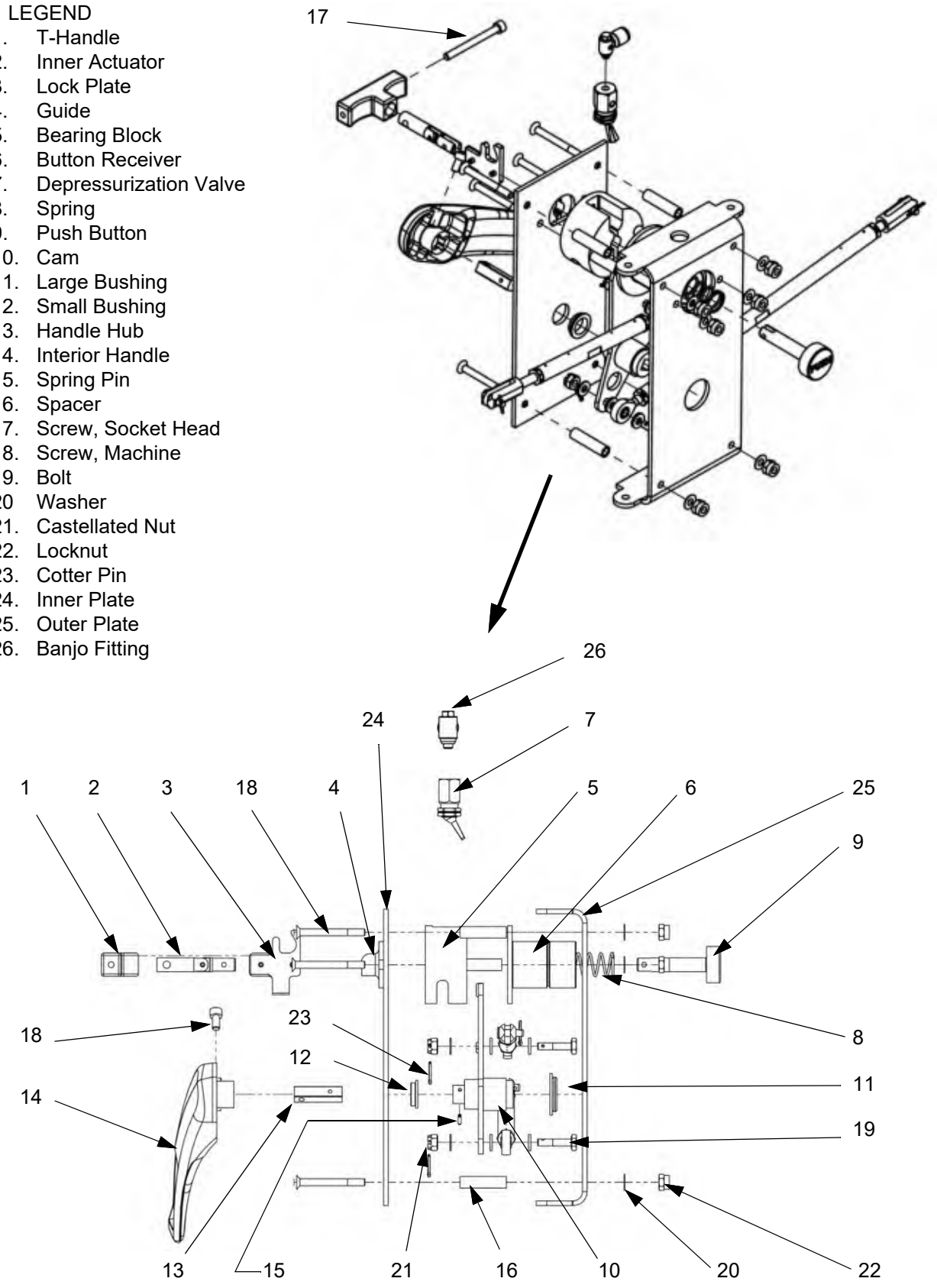

O. Door Depressurization Switch

(1) Removal

(a) Open the door then remove the four screws from inside the door handle.

(b) Remove the T-handle.

(c) Remove the steps.

(d) Remove the door interior finish panels,

(e) Disconnect then remove the depressurization valve. Note orientation of the switch for re-installation or installation of a new switch.

(2) Installation

(a) Installation is the reverse of removal.

P. Insulation

(1) Removal

(a) Remove the door finish panels.

(b) Cut the joint sealing tape at the butt joint between the section of insulation to be removed and the adjoining section.

(c) Remove the retaining discs attaching the section of insulation to the support spikes.

(d) Remove the insulation.

Note: The insulation bag may also be attached to the fuselage using hook and loop tape.

(2) Installation

(a) Cut new insulation to the size necessary.

(b) Reseal the insulation bag using hardware tape.

(c) Put a 2” by 2” piece of hardware tape on both sides of the insulation bag where the support spikes will penetrate.

(d) Push a piece of mating hook tape onto each piece of loop tape on the fuselage.

(e) Remove the release liner from the hook tape strip.

(f) Hold the section of insulation against the fuselage then push it onto the support spikes. Firmly push the bag onto the exposed adhesive of the hook strip.

Note: Do not compress the insulation bag too much.

(g) Install the retaining discs.

(h) Tape the butt joints between the new and existing insulation bags.

(i) Install the finish panel.

Figure 52-10-14: Insulation

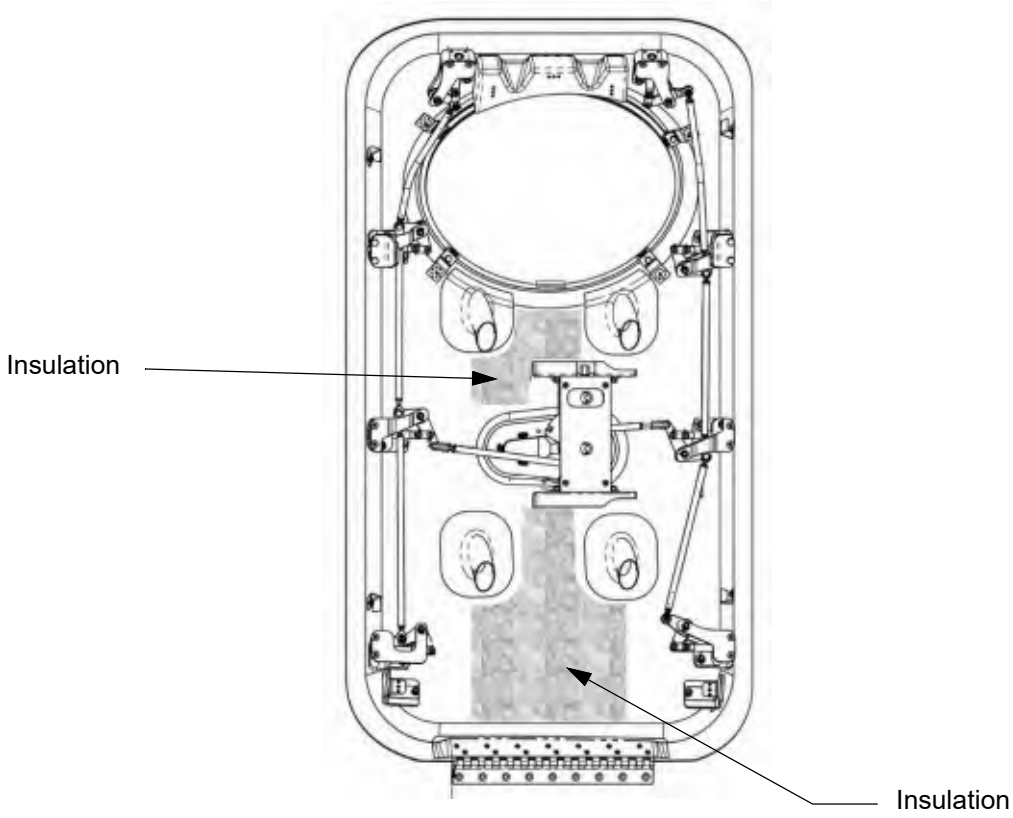

Q. Sound Damper

(1) Removal

(a) Remove the door finish panels.

(b) Remove the insulation as applicable.

(c) Remove the sound damper material.

WARNING: Do not use metallic scrapers that could damage the door during adhesive removal. Plastic scrapers are recommended.

(2) Installation

(a) Cut the new sound damper material to the shape and size necessary.

Note: Use scissors or a sharp knife to cut the damping material. If a knife is used, always cut down through the aluminum side of the damping material, orienting the aluminum face up and visible when cutting.

Note: Avoid excessive bending, scratching, denting, or cutting of the damping material during handling and installation.

(b) Clean the bonding surface of the door or finish panel using a 50/50 solution of isopropyl alcohol and water. Let the cleaned area dry completely.

(c) Remove the release liner from the sound damper material then push it into place. Apply firm pressure over the entire surface of the sound damper material. Use of a roller is recommended.

(d) Install the insulation as applicable.

(e) Install the finish panels.

Figure 52-10.1: Door Sound Damper Material

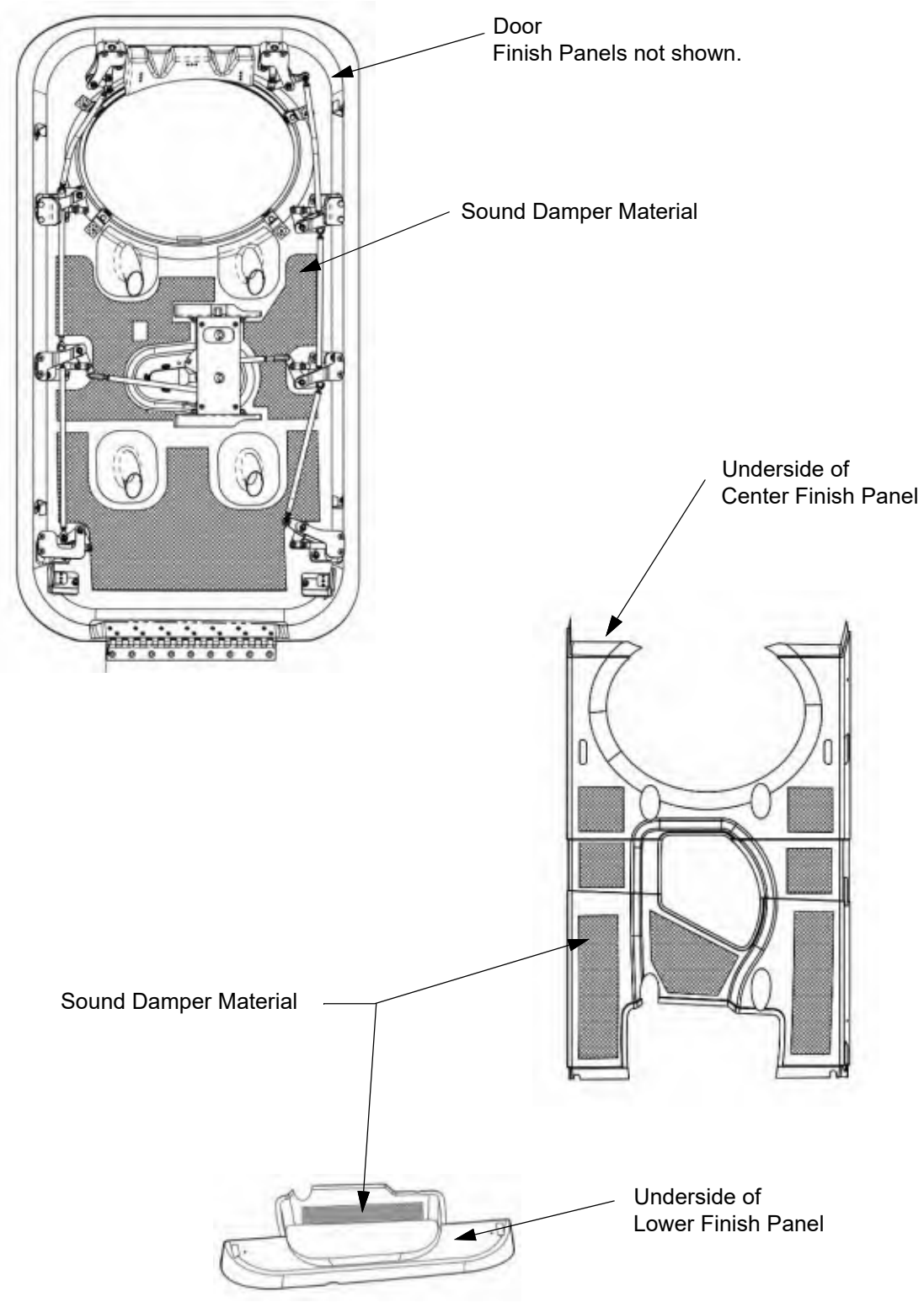

EMERGENCY DOOR

1. Description

The airplane has an emergency exit on the right side of the cabin directly across from the passenger/crew door. An upper pull lever is used to open the exit from inside the airplane. A handle on the lower portion of the door is used to open the exit from outside the airplane.

A removable pin (the "Remove Before Flight" pin) is inserted into a socket in the lower portion of the door inside the cabin to lock the door for security when the airplane is parked.

2. Maintenance Practices

A. Emergency Exit Door

The emergency exit door should be removed from the inside and outside of the airplane to verify correct operation from both sides.

(1) Removal

(a) Remove the "Remove Before Flight Pin" if installed in the door.

(b) Remove the interior handle closeout panel.

(c) From the inside of the cabin, pull the latch handle at the upper edge of the exit door.

(d) Support the door while pulling inward until the latch pins are free of the striker block.

(e) Lift the door out of the support flange.

(f) Disconnect the window dimmer electrical connection from the wiring harness.

(g) Remove the door.

(2) Installation

(a) Before re-installation of the emergency exit door, clean and inspect the door gasket on the fuselage.

(b) Connect the window dimmer electrical connection to the wiring harness.

Note: Loctite LB 8209 may be applied to the seal to ensure proper sealing.

(c) Insert the lower edge of the emergency exit door into the support flange.

(d) Pull the lever to retract the latching pins then push the door into position.

(e) Apply pressure to seat the door while pushing the lever to extend the latching pins into the striker block.

CAUTION: The lower edge of the red paint on the locking pins must align with the lower edge of the locking pin block for correct door operation.

(f) Insert the “Remove Before Flight” pin into the placarded hole on the interior side of the door.

(g) Install the interior handle closeout panel.

(3) Door Adjustment

(a) Remove the emergency exit door from the airplane, refer to 52-20.2.A(1).

(b) Remove the (8) screws, lock washers, and washers that attach the trim panel to the emergency exit door.

(c) Remove the trim panel from the door.

(d) Make sure (4) washers are installed under the roll pin on each locking pin, refer to Figure 52-20.2.

(e) Temporarily reinstall the emergency exit door in the airplane.

(f) Check the door rigging as follows:

Note: Manually hold the door in position in the fuselage while performing this check.

(i) Pull the interior handle to the maximum open position to disengage the locking pins.

(ii) Make sure there is a minimum gap of 0.020” between the top of each locking pin and the corresponding locking pin bracket in the fuselage.

Note: If the interior door handle does not fully retract the locking pins with (4) washers installed on the locking pins, contact Epic Aircraft for disposition.

(iii) Release the interior door handle.

(g) Adjust the cable as follows:

Note: Do not adjust the cable at the upper clevis. Adjustments are only made to the cable housing.

(i) Install the “Remove Before Flight” pin into lower door handle for cable rigging.

(ii) Loosen the upper and lower cable clamps enough to allow the cable housing to move during adjustment. Do not remove the clamps from the door.

(iii) Loosen the upper and lower jam nuts on the cable housing.

CAUTION: The lower edge of the red paint on the locking pins must align with the lower edge of the locking pin blocks for correct door operation.

(iv) Adjust the upper and lower jam nuts to remove all of the slack in the cable and align the lower edge of the red paint on the locking pins with the lower edge of the locking pin blocks, refer to Figure 52-20.2.

(v) Tighten all jam nuts and cable clamps to prevent any movement of the cable housing.

(vi) Remove the “Remove Before Flight” pin.

(vii) While holding the door in position, use the exterior handle to actuate the locking pins.

(viii) Make sure the upper threaded end of the cable does not come in contact with the upper end of the cable housing when the exterior handle is actuated to the fully open position.

Note: If the threaded end of the cable contacts the housing, adjust the cable housing towards to bottom handle as needed to provide adequate clearance.

(ix) Make sure the exterior handle cycles smoothly and the door opens freely.

(x) Re-stow the exterior handle.

(xi) Adjust the cable as needed to achieve the required clearance and locking pin position.

(h) Torque the upper and lower jam nuts to 120 - 140 in-lbs.

(i) Torque the upper and lower cable clamps to 20 - 25 in-lbs.

(j) Remove the emergency exit door from the airplane.

(k) Put the trim panel in position on the emergency exit door.

(l) Install the (8) washers, lock washers, and screws that attach the trim panel to the door. Torque the screws to 12 - 15 in-lbs.

(m) Install the emergency exit door, refer to 52-20.2.A(2).

(n) Do an operational check of the interior and exterior door handles to confirm the emergency exit door can be removed from the airplane.

(o) Install the “Remove Before Flight” pin into the placarded hole in the door.

(4) Inspection

(a) Remove the “Remove Before Flight” pin if installed in the door.

(b) Pull the release lever from inside the cabin then remove the emergency exit door.

(c) Reinstall the emergency exit door then remove it using the release handle on the exterior of the airplane.

(d) Inspect the rubber door seal on the door and the mating surface on the fuselage for condition and security.

(e) Remove the interior finish panel of the door then inspect the window seal for condition and security.

(f) Inspect the door attachment areas for condition, wear, and correct engagement.

(g) Inspect the door frame in the fuselage. Inspect the striker plate for condition and security.

(h) Inspect the placards for condition and security.

(i) Inspect the interior and exterior release lever handles, pins, springs, and associated components for condition, wear and security. Inspect the cable release system for fraying or kinks.

(j) Inspect the window for correct bonding attachment, condition, and security.

(k) Inspect the emergency door structure for delamination, disbonding, and general condition.

(l) Attachment pins and receptacles exceeding more than 10% wear of the original thickness or circumference must be replaced.

(m) Bent or damaged emergency exit door latch components must be replaced.

(n) Verify rigging and operation of the door.

(o) Install the emergency exit door interior finish panel.

B. Release Cable

(1) Removal

(a) Remove the emergency exit door then remove the interior finish panel from the door.

(b) Remove the cotter pin, washer, and pin securing the cable end clevis to the door handle.

(c) Remove the cotter pin, washer, and pin securing the cable end clevis to the door latching mechanism.

(d) Loosen the jam nuts securing the cable to the two standoffs on the emergency exit door.

(e) Remove the cable.

(2) Installation

(a) Orient the cable with ball end clevis near the door handle attachment point.

(b) Slide the cable housing into the two slotted standoffs on the emergency exit door then loosely tighten the jam nuts.

(c) Attach the jam nut adjustable cable end clevis to the latching mechanism.

(d) Attach the ball end cable clevis to the door handle.

(e) Adjust the position of the cable housing as required then tighten the jam nuts at the standoffs.

(f) Adjust the tension in the cable using the jam nuts at the adjustable clevis as required for correct operation of the door handle and the emergency exit door latching mechanism. Torque the nuts 120 to 140 in-lbs.

(g) Install the emergency exit door interior finish panel.

(h) Seat then latch the door into place.

(i) Insert the “Remove Before Flight” pin into the placarded hole on the interior side of the door.

C. Door Seal and Gasket

(1) Removal

(a) Carefully pry up the edge of the door seal or door gasket and pull the seal or gasket away from its mounting surface.

(b) Use a non-metallic scraper to carefully remove as much residual adhesive as possible.

(c) Remove the remainder of the adhesive using methyl propyl ketone.

(2) Installation - Door Seal

(a) Coat the emergency exit door joggle with RTV 100.

(b) Install the door seal on the emergency exit door (refer to figure 52.20-1).

(c) Clean excess adhesive from around the seal and allow the adhesive to fully cure.

(d) Install the emergency exit door.

(3) Installation - Door Gasket

(a) Coat the door gasket with RTV 100.

(b) Install the door gasket on the fuselage (refer to figure 52.20-1).

(c) Clean excess adhesive from around the seal and allow the adhesive to fully cure.

(d) Install the emergency exit door.

Figure 52-20.1: Emergency Exit Door (Sheet 1 of 2)

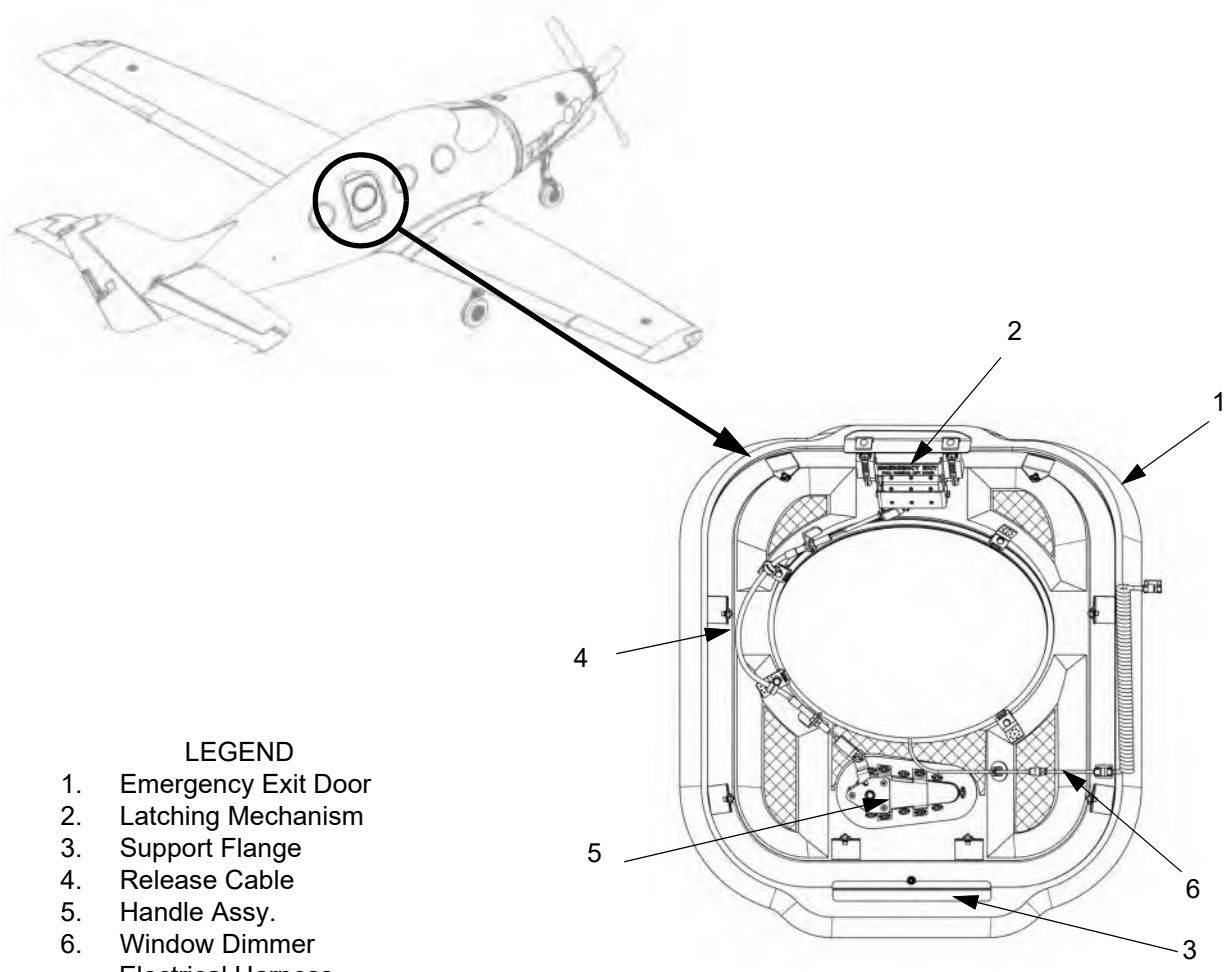

LEGEND

1. Emergency Exit Door
2. Latching Mechanism
3. Support Flange
4. Release Cable
5. Handle Assy.
6. Window Dimmer Electrical Harness
7. Door Seal
8. Door Gasket

View looking outboard with finish panels removed.

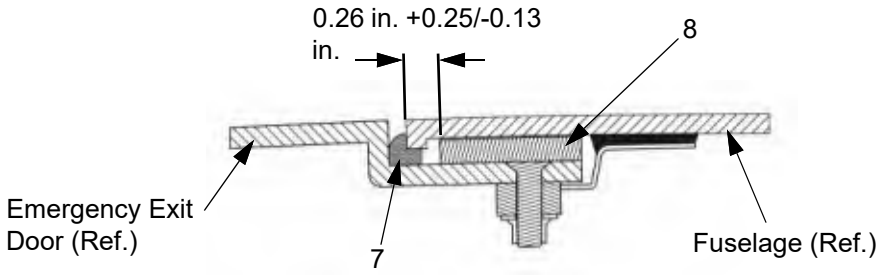

Emergency Exit Door Seal and Gasket

Figure 52-20.1: Emergency Exit Door (Sheet 2 of 2)

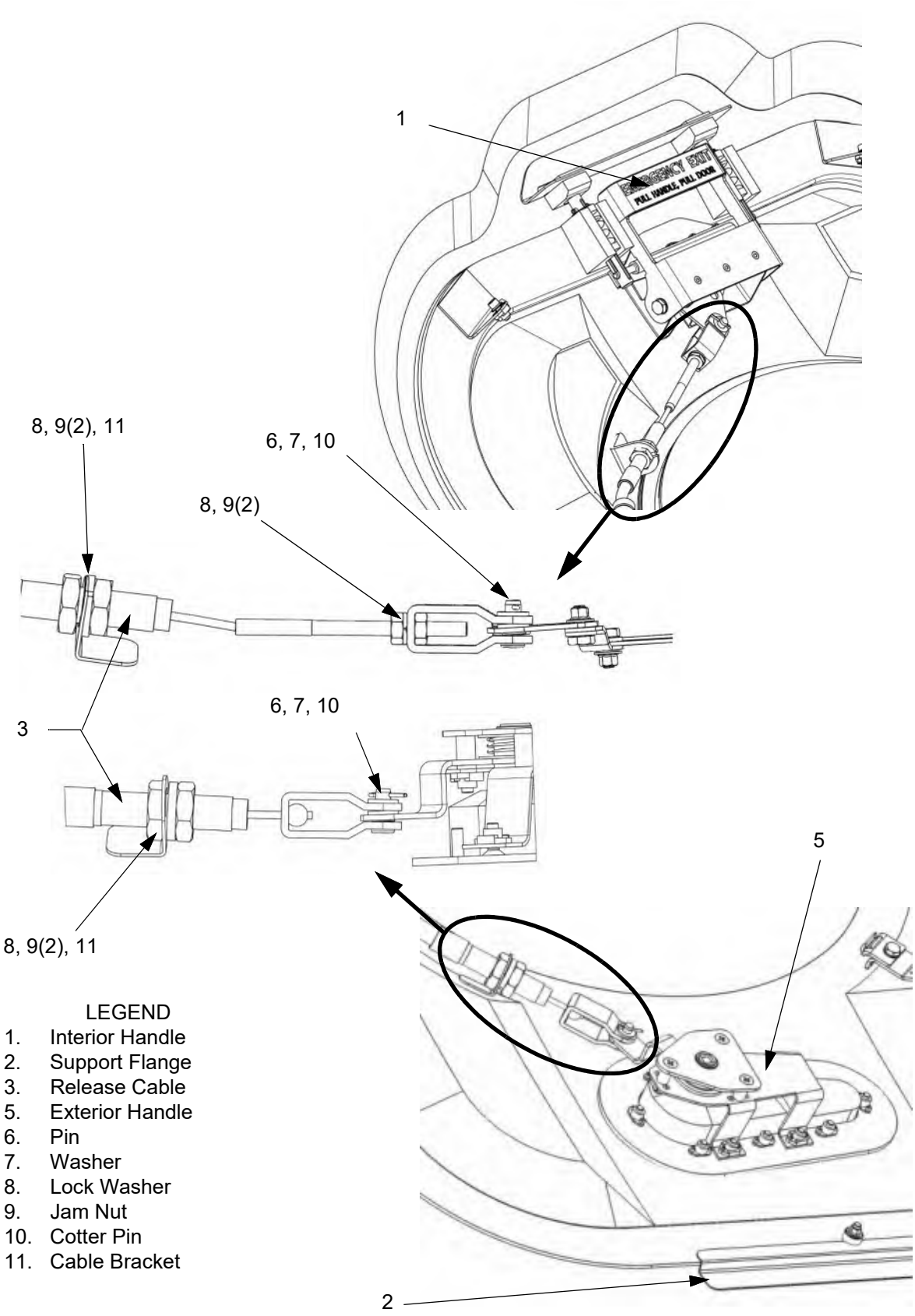

LEGEND

1. Interior Handle
2. Support Flange
3. Release Cable
5. Exterior Handle
6. Pin
7. Washer
8. Lock Washer
9. Jam Nut
10. Cotter Pin
11. Cable Bracket

Figure 52-20.2: Emergency Door Latch - Locking Pin Adjustment

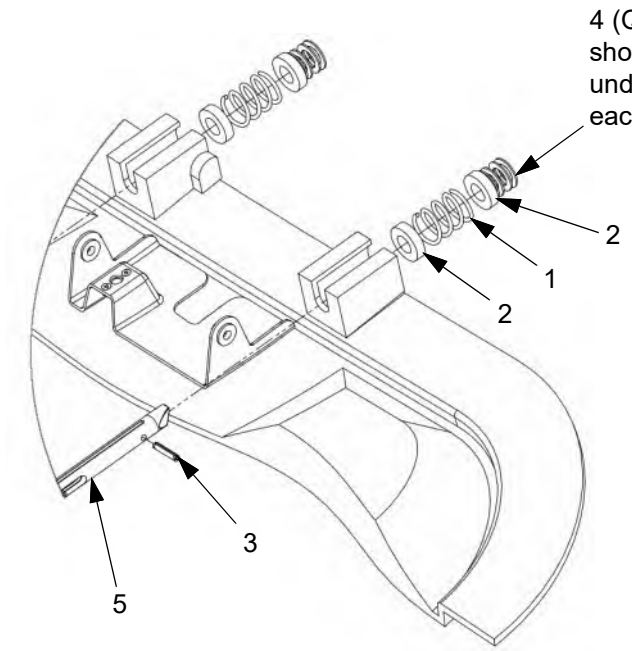

LEGEND

1. Spring
2. Guide Bearing
3. Roll Pin
4. Washer
5. Locking Pin
6. Locking pin Block

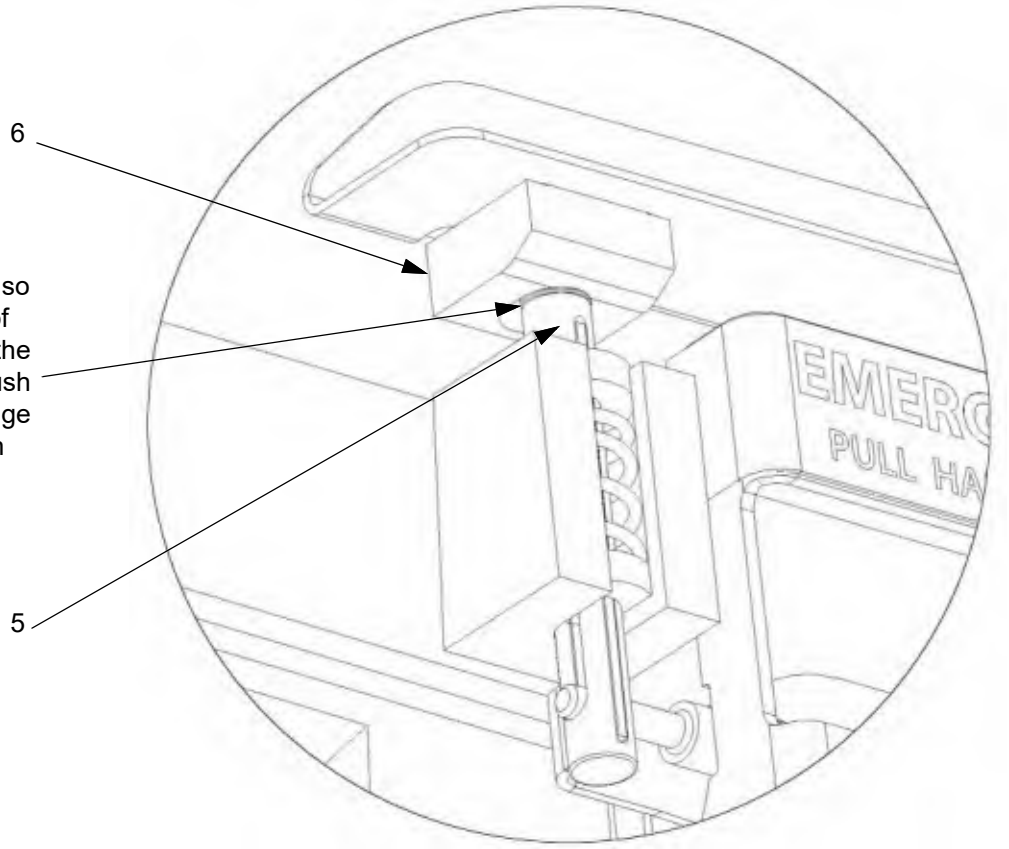

Figure 52-20.3: Emergency Door Handle - Exploded (Sheet 1 of 2)

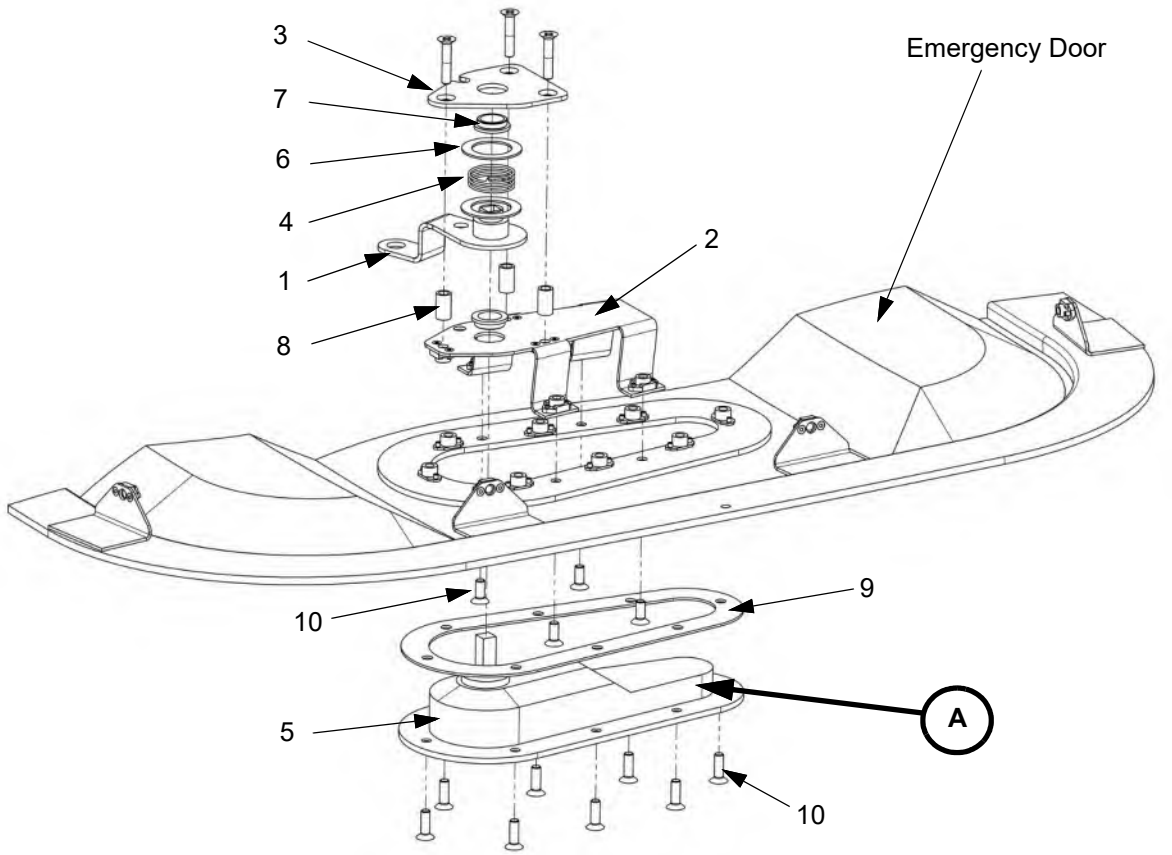

LEGEND

1. Cable Lever
2. Lever Plate
3. Enclosure Plate
4. Spring
5. Exterior Handle Assy.
6. Nylon Washer
7. Flanged Bushing
8. Spacer
9. Spacer Plate
10. Screw

Figure 52-20.3: Emergency Door Handle - Exploded (Sheet 2 of 2)

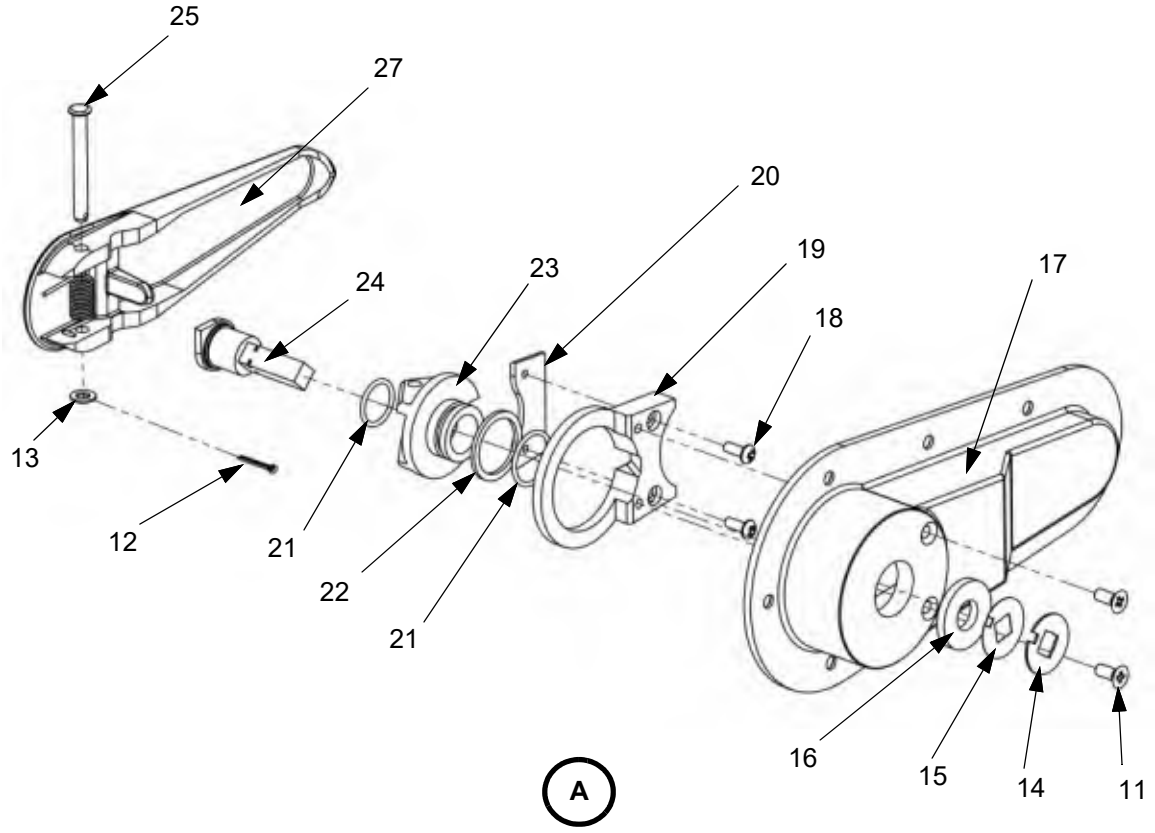

LEGEND

11. Screw, Machine
12. Cotter Pin
13. Washer, Reduced OD
14. Retainer, Top
15. Retainer, Bottom
16. Spacer
17. Handle Housing
18. Screw, Pan Head
19. Housing Insert
20. Insert Cap
21. O-Ring
22. Washer
23. Spindle Base
24. Spindle
25. Pin, Drilled Shank
26. Spring, Torsion
27. Handle

CHAPTER 53

Fuselage

This Page Intentionally Left Blank

List of Effective Pages

Chapter/Section	Page Number	Effective Date
53-Title	Page 1	02 Jan 2020
53-Title	Page 2	02 Jan 2020
53-LOEP	Page 1	20 Oct 2023
53-LOEP	Page 2	02 Jan 2020
53-TOC	Page 1	02 Jan 2020
53-TOC	Page 2	02 Jan 2020
53-00	Page 1	13 Apr 2020
53-00	Page 2	02 Jan 2020
53-10	Page 1	02 Jan 2020
53-10	Page 2	02 Jan 2020
53-10	Page 3	16 May 2022
53-10	Page 4	20 Oct 2023
53-20	Page 1	02 Jan 2020
53-20	Page 2	02 Jan 2020
53-20	Page 3	02 Jan 2020
53-20	Page 4	02 Jan 2020
53-20	Page 5	02 Jan 2020
53-20	Page 6	02 Jan 2020
53-40	Page 1	02 Jan 2020
53-40	Page 2	16 May 2022
53-40	Page 3	02 Jan 2020
53-40	Page 4	02 Jan 2020
53-40	Page 5	02 Jan 2020
53-40	Page 6	02 Jan 2020
53-80	Page 1	02 Jan 2020
53-80	Page 2	02 Jan 2020
53-80	Page 3	02 Jan 2020
53-80	Page 4	02 Jan 2020
53-80	Page 5	02 Jan 2020
53-80	Page 6	02 Jan 2020
53-80	Page 7	02 Jan 2020
53-80	Page 8	02 Jan 2020
53-80	Page 9	02 Jan 2020
53-80	Page 10	02 Jan 2020
53-80	Page 11	16 May 2022
53-80	Page 12	02 Jan 2020
53-80	Page 13	16 May 2022

53-80 ..... Page 14 ..... 02 Jan 2020
53-80 ..... Page 15 ..... 02 Jan 2020
53-80 ..... Page 16 ..... 02 Jan 2020
53-80 ..... Page 17 ..... 02 Jan 2020
53-80 ..... Page 18 ..... 02 Jan 2020
53-80 ..... Page 19 ..... 02 Jan 2020
53-80 ..... Page 20 ..... 02 Jan 2020
53-80 ..... Page 21 ..... 02 Jan 2020
53-80 ..... Page 22 ..... 02 Jan 2020
53-80 ..... Page 23 ..... 02 Jan 2020
53-80 ..... Page 24 ..... 02 Jan 2020
53-80 ..... Page 25 ..... 02 Jan 2020
53-80 ..... Page 26 ..... 02 Jan 2020
53-80 ..... Page 27 ..... 02 Jan 2020
53-80 ..... Page 28 ..... 02 Jan 2020
53-80 ..... Page 29 ..... 02 Jan 2020
53-80 ..... Page 30 ..... 02 Jan 2020

CHAPTER 53

Table of Contents

List of Effective Pages ..... 53-LOEP / Page 1
Table of Contents ..... 53-TOC / Page1

Paragraph **Page Number**

Fuselage

1. General ..... 53-00 / Page 1

Main Frame

1. Description ..... 53-10 / Page 1
   A. Firewall ..... 53-10 / Page 1
   B. Spar Saddle ..... 53-10 / Page 1
   C. Pressure Bulkhead ..... 53-10 / Page 1
   D. Vertical Fin ..... 53-10 / Page 1
   E. Upper Aft Vertical Fin Bulkhead ..... 53-10 / Page 1
   F. Lower Aft Vertical Fin Bulkhead ..... 53-10 / Page 2
   G. Vertical Fin Spar ..... 53-10 / Page 2
   H. Vertical Fin Tip Rib ..... 53-10 / Page 2
   I. Vertical Top Closeout ..... 53-10 / Page 2
   J. Fuselage Drain Holes ..... 53-10 / Page 2

Auxiliary Structure

1. Description ..... 53-20 / Page 1
   A. Cabin Floors ..... 53-20 / Page 1
   B. Auto Pilot Servo Bracket ..... 53-20 / Page 1
   C. Servo Bracket Base ..... 53-20 / Page 1
   D. Air Conditioning Compressor Enclosure ..... 53-20 / Page 1
   E. Fresh Air Outlet Duct ..... 53-20 / Page 1
   F. Magnetometer Shelf ..... 53-20 / Page 1
   G. ELT Battery Shelf ..... 53-20 / Page 1
2. Maintenance Practices ..... 53-20 / Page 2
   A. Cabin Floor Access Panels ..... 53-20 / Page 2
   B. Cabin Floor Panels ..... 53-20 / Page 4

Attach Fittings

1. Description ..... 53-40 / Page 1
2. Maintenance Practices ..... 53-40 / Page 1
   A. Crew Seat Rail ..... 53-40 / Page 1
   B. Middle Passenger Seat Rail ..... 53-40 / Page 2
   C. Aft Passenger Seat Rail ..... 53-40 / Page 2

Electrical Harness

1. Description ..... 53-80 / Page 1
2. Maintenance Practices ..... 53-80 / Page 1
   A. Wheel Well Electrical Harness ..... 53-80 / Page 1
   B. Main Cabin Electrical Harness ..... 53-80 / Page 8
   C. Electrical Harness Aft of the Pressure Bulkhead ..... 53-80 / Page 22

FUSELAGE

1. General

The fuselage of this airplane is made of carbon fiber composite materials in a semi-monocoque design. The main fuselage components include fuselage skins, firewall, pressure bulkhead, vertical fin, vertical fin spar, vertical fin bulkheads, closeouts for the horizontal stabilizer seat, spar saddle, vertical stabilizer rib, and vertical stabilizer closeout. The majority of the components are permanently bonded together to create the fuselage structure. The vertical stabilizer and door frame are integral to the fuselage structure.

Longerons and ribs support the cabin floors. Access to under-floor components is through access panel covered holes. The longerons, ribs, floors, and access panels are also made of carbon fiber composite materials.

Figure 53-0.1: Fuselage Components

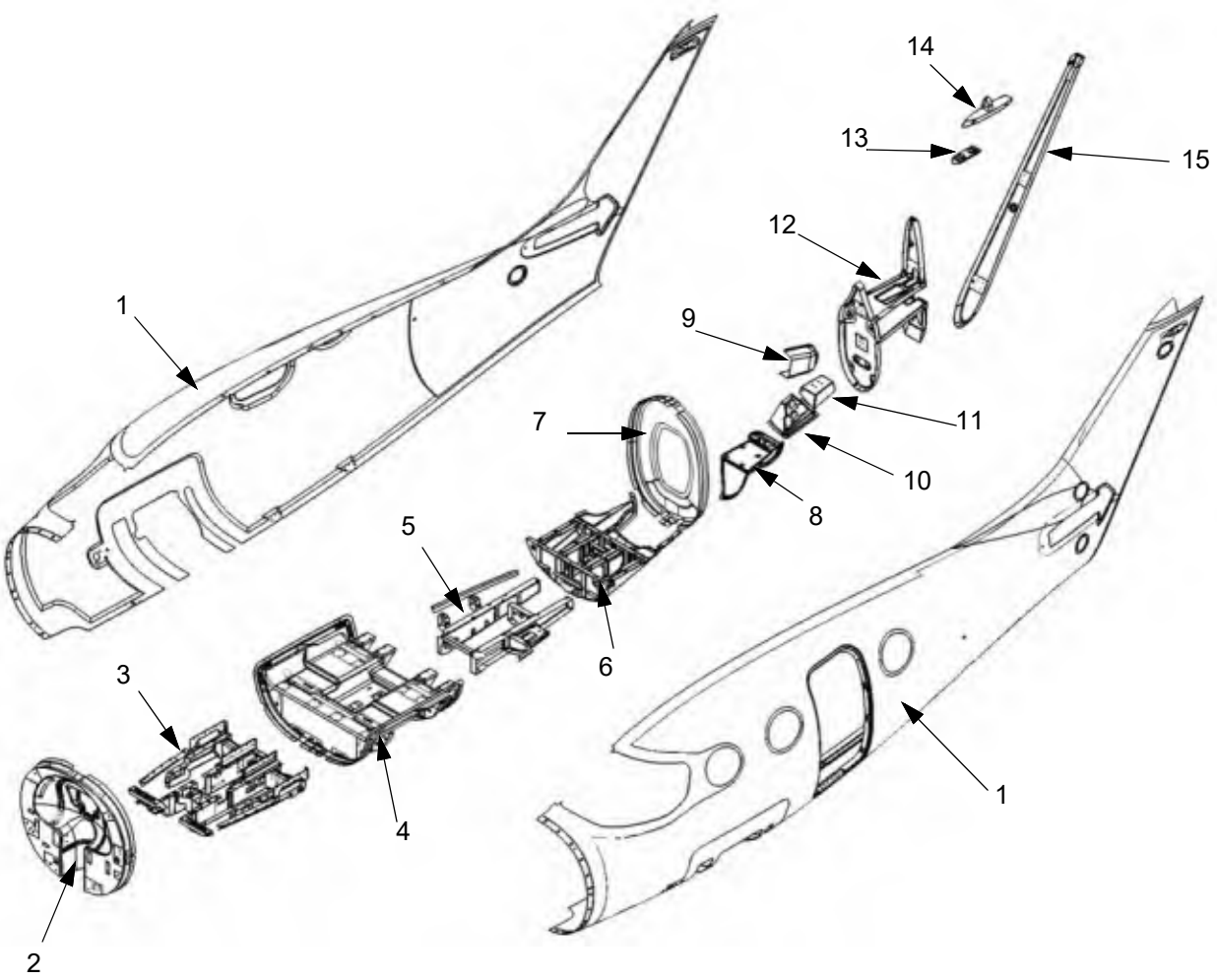

LEGEND

1. Fuselage Half
2. Firewall
3. Cockpit Floor Support
4. Spar Saddle
5. Cabin Floor Support
6. A/C Housing
7. Pressure Bulkhead
8. A/C Pump Enclosure
9. Fresh Air Outlet Duct
10. Auto Pilot Servo Bracket
11. ELT Battery Shelf
12. Vertical Fin Bulkheads and Horizontal Stabilizer Supports
13. Magnetometer Shelf
14. Vertical Tip Rib w/ Vertical Top Closeout
15. Aft Vertical Spar

MAIN FRAME

1. Description

The main frame of the fuselage is the firewall, spar saddle, pressure bulkhead, vertical fin, upper aft and lower aft vertical fin bulkheads, vertical fin spar, closeouts for the horizontal stabilizer, vertical fin tip rib, and vertical top closeout.

A. Firewall

The firewall separates the engine from the cabin of the airplane. It is made of carbon fiber fabric bonded to a honeycomb core. Integral hardpoints give support for the engine mount and for various penetrations for electrical, fuel, and hydraulic systems. The forward face of the firewall is completely covered by a thermal protective coating and a fireproof blanket.

B. Spar Saddle

The spar saddle gives attachment points and support for the wings. It is made of carbon fiber fabric bonded to a honeycomb core. Integral hardpoints give support for flight control cable system pulleys, the crew seats, and for various penetrations for electrical, fuel, hydraulic, and flight control systems. Crew seat supports are bonded and bolted to the forward face. Support gussets for the crew seats are attached to the aft face.

C. Pressure Bulkhead

The pressure bulkhead separates and seals the cabin of the airplane from the empennage letting the cabin be pressurized. The outflow valve for the pressurization system is mounted to the center access panel of the pressure bulkhead. The bulkhead is made of carbon fiber fabric bonded to a honeycomb core. Integral hardpoints give support for flight control cable system pulleys, and for various penetrations for electrical, air conditioning, and flight control systems.

D. Vertical Fin

The vertical fin strengthens the empennage and supports the closeouts for the horizontal stabilizer seat. It is made of carbon fiber fabric bonded to a honeycomb core. Integral hardpoints give support for flight control cable system pulleys, attachment of the horizontal stabilizer, and for various penetrations for electrical systems, and rudder and elevator cables.

E. Upper Aft Vertical Fin Bulkhead

The upper aft vertical fin bulkhead strengthens the vertical stabilizer and supports the upper closeout for the horizontal stabilizer seat. It is made of carbon fiber fabric bonded to a honeycomb core. An integral hardpoint gives support for attachment of the horizontal stabilizer and for an electrical system penetration.

F. Lower Aft Vertical Fin Bulkhead

The lower aft vertical fin bulkhead strengthens the vertical stabilizer and supports the lower closeout for the horizontal stabilizer seat. It is made of carbon fiber fabric bonded to a honeycomb core. An integral hardpoint gives support for attachment of the horizontal stabilizer, support for flight control cable system pulleys, and penetrations for rudder cables.

G. Vertical Fin Spar

The vertical fin spar closes the empennage of the airplane and supports the rudder. It is made of carbon fiber fabric bonded to a honeycomb core. Integral hardpoints give support for flight control cable system pulleys, attachment of the rudder, and for penetrations of electrical systems and the rudder cables.

H. Vertical Fin Tip Rib

The vertical fin tip rib closes the top of the vertical stabilizer. It is made of laminated carbon fiber fabric.

I. Vertical Top Closeout

The vertical top closeout closes the top of the vertical stabilizer. It is made of laminated carbon fiber fabric.

J. Fuselage Drain Holes

There are four drain holes in the bottom of the fuselage and four drain holes through the supports in the evaporator enclosure under the aft passenger seats. Two evaporator drain lines connect at a common fitting in the center of the fuselage.

K. Servicing and Maintenance

The main frame does not require any service or maintenance. Visually inspect the vertical fin spar and the empennage annually for any cracking, damage, delamination, or distortion. If damage is found, do a tap test (refer to Chapter 51-10) and contact Epic Aircraft, LLC.

Figure 53-10.1: Fuselage Drain Hole Locations (Sheet 1 of 2)

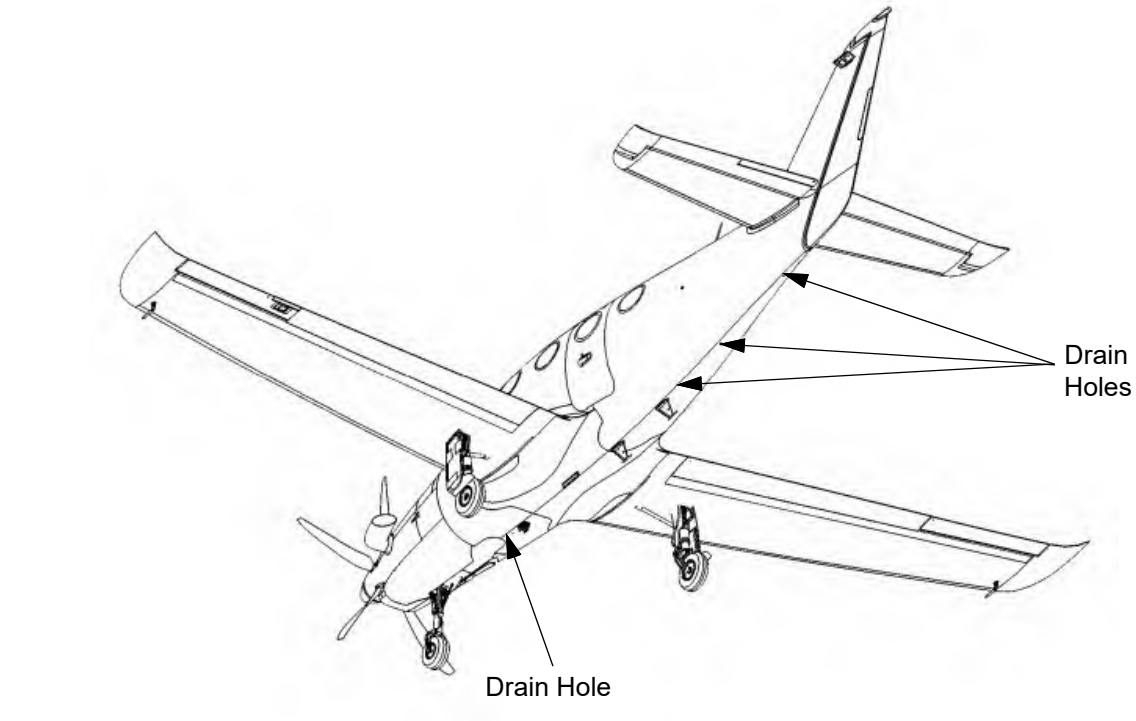

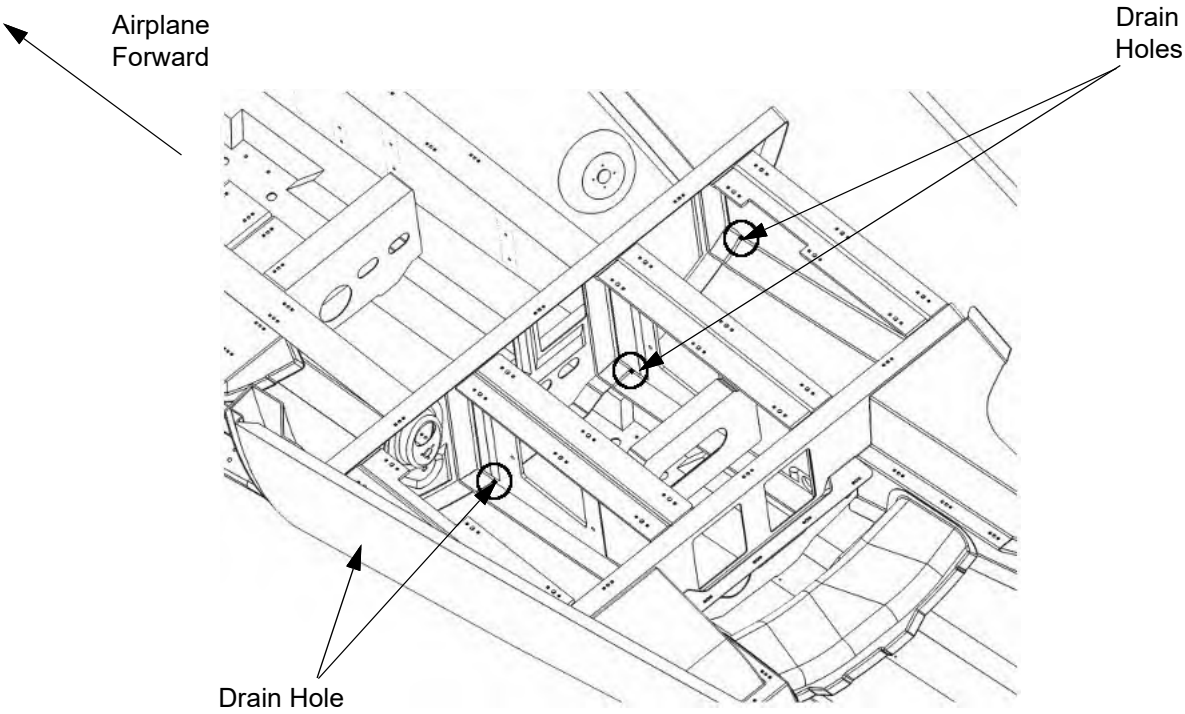

Air Conditioning System Evaporators not shown for clarity.

Figure 53-10.1: Fuselage Drain Hole Locations (Sheet 2 of 2)

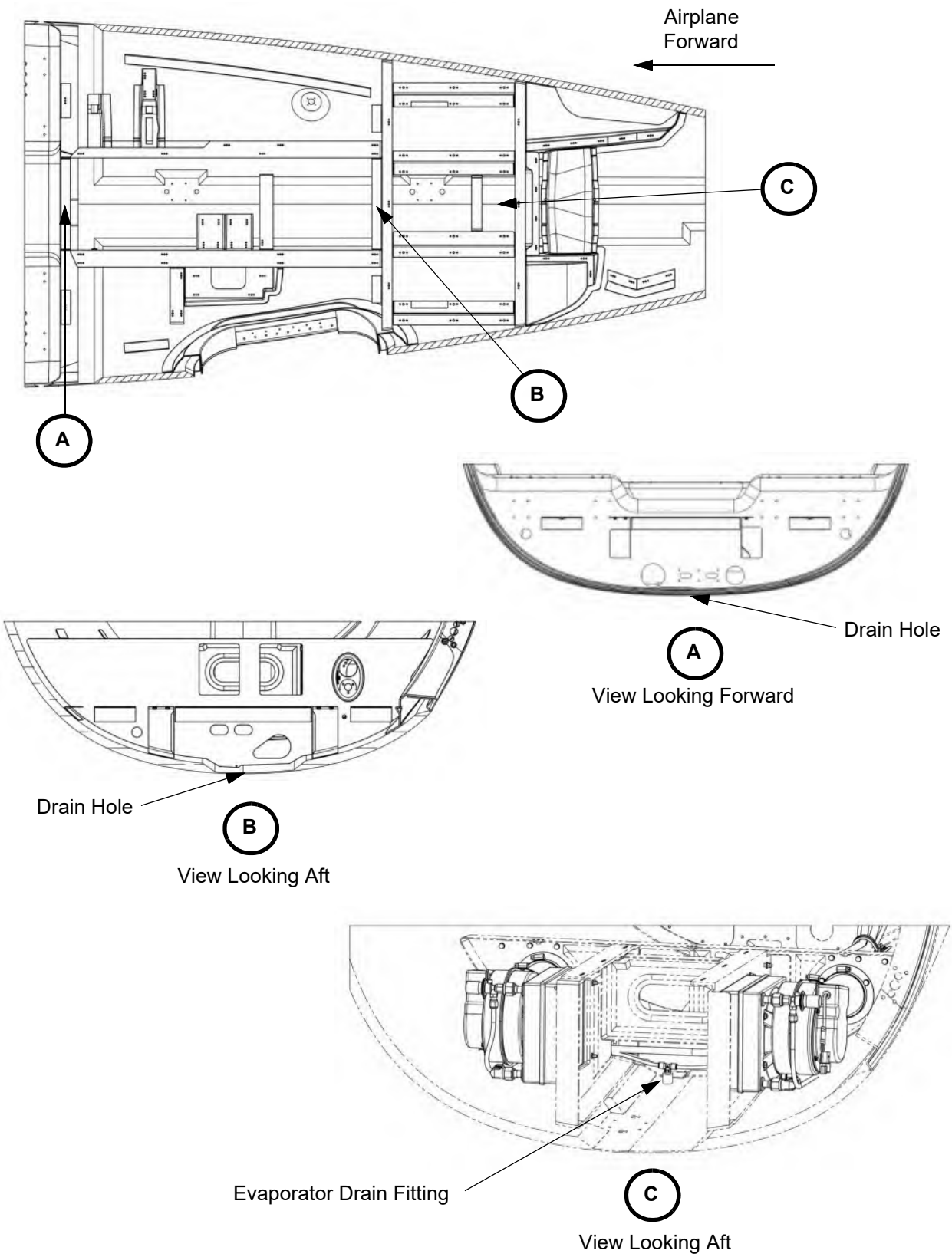

AUXILIARY STRUCTURE

1. Description

Auxiliary structure for this airplane includes the cabin floors, floor access panels, auto pilot servo bracket, servo bracket base, air conditioning pump enclosure, fresh air outlet duct, and the magnetometer shelf. All of these components are made of carbon fiber composite materials.

A. Cabin Floors

Cabin floors are attached to the underlying support structure using screws.

B. Auto Pilot Servo Bracket

The auto pilot servo bracket is bonded to the interior of the empennage using epoxy adhesive. The location of the bracket is set by the center of the upper servo attachment hole at WL 74.98 and FS 323.38.

C. Servo Bracket Base

The servo bracket base is bonded to the interior of the fuselage using epoxy adhesive. It is forward of the spar saddle on the pilot's side of the airplane at FS 135.0 and BL 9.96.

D. Air Conditioning Compressor Enclosure

The air conditioning equipment enclosure is bonded to the interior of the empennage aft of the pressure bulkhead on the pilot's side of the airplane using epoxy adhesive. The enclosure is positioned with its aft upper corner at WL 74.70 and FS 321.50.

E. Fresh Air Outlet Duct

The fresh air outlet duct is bonded to the interior of the empennage aft of the pressure bulkhead on the copilot's side of the airplane using epoxy adhesive. The center point of the outlet opening is at WL 83.6. The duct is rotated up 10° from horizontal.

F. Magnetometer Shelf

The magnetometer shelf is bonded to the interior of the vertical stabilizer on the copilot's side of the airplane using epoxy adhesive. The centerline of the shelf is at FS 403.0 with the top of the shelf at WL 138.7.

G. ELT Battery Shelf

The ELT battery shelf is bonded to the interior of the empennage aft of the pressure bulkhead on the pilot's side of the airplane using epoxy adhesive. The forward edge of the shelf is at FS 321.5 with the top of the shelf at WL 86.28.

2. Maintenance Practices

A. Cabin Floor Access Panels

(1) Removal

(a) Remove the seat covering the access panel (refer to Chapter 25-10 and 25-20), if necessary.

(b) Remove the carpet covering the access panel (refer to Chapter 25-10 and 25-20).

(c) Remove the screws and washers attaching the access panel to the floor.

(d) Remove the access panel.

(2) Installation

(a) Put the access panel over the hole in the floor aligning the screw holes in the panel with the screw holes in the floor.

(b) Attach the access panel to the floor using washers and screws.

(c) Install the carpet (refer to Chapter 25-10 and 25-20).

(d) Install the seat (refer to Chapter 25-10 and 25-20), if necessary.

Figure 53-20.1: Classic and GX Cabin Floor Access Panels

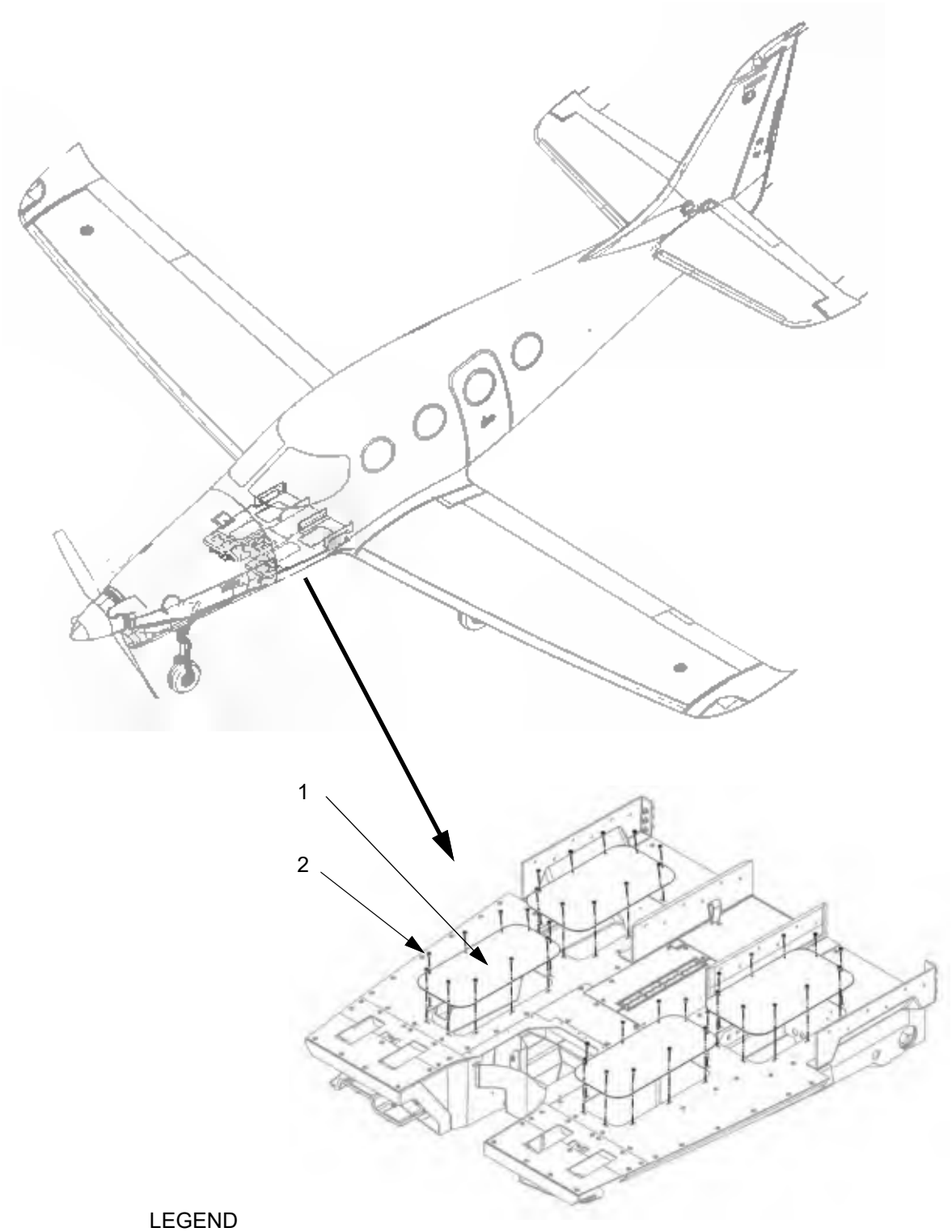

LEGEND

1. Access Panel
2. Screw

Figure 53-20.2: AX Cabin Floor Access Panels

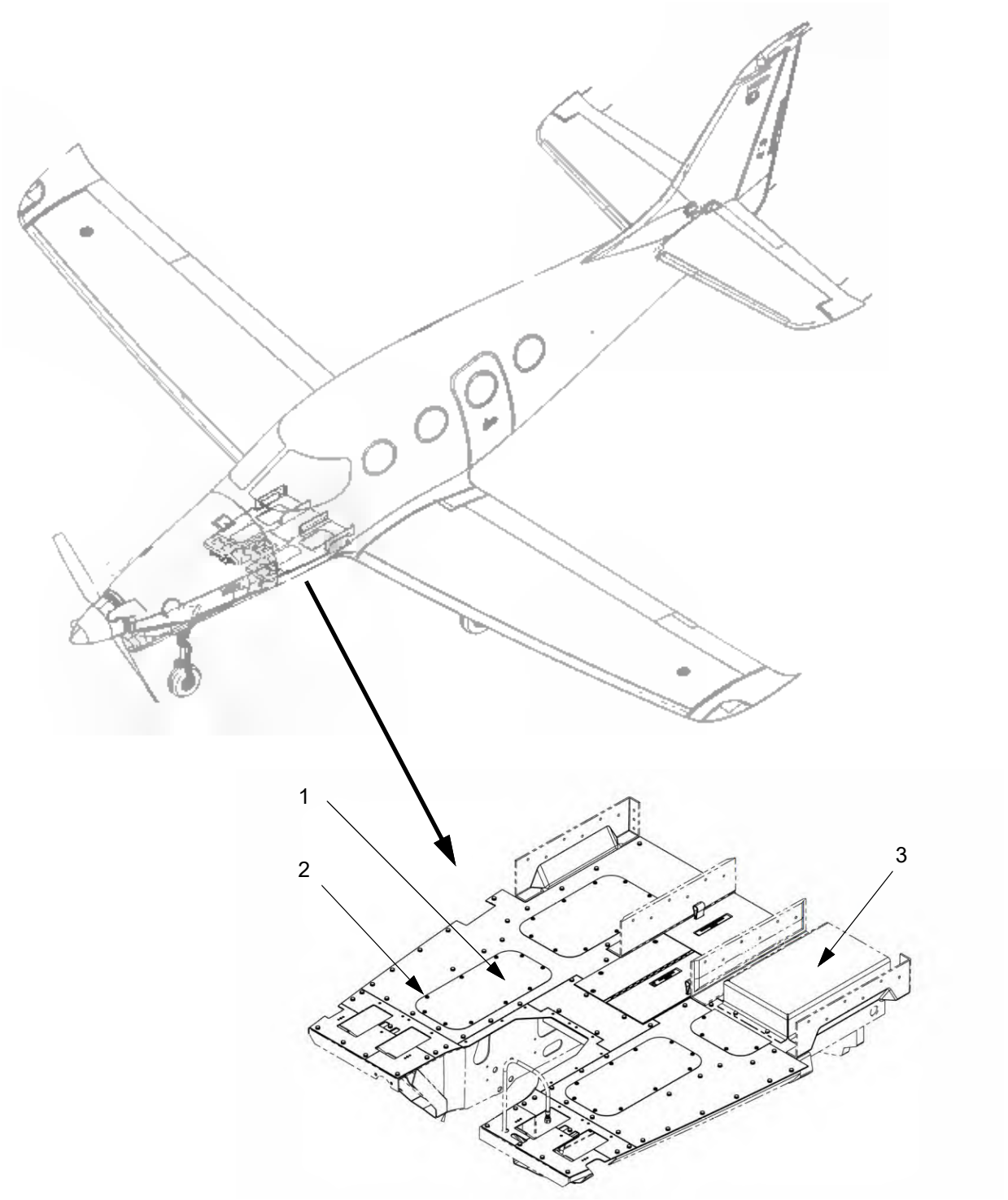

LEGEND

1. Access Panel
2. Screw
3. Brake Servo

B. Cabin Floor Panels

(1) Removal

(a) Remove the crew or passenger seats (refer to Chapter 25-10 and 25-20), as necessary.

(b) Remove the seat rails (refer to Chapter 53-40), as necessary.

(c) Remove the carpet over the floor panel(s) to be removed. Refer to Chapter 25-10 and 25-20.

(d) Remove the bolts and washers, screws and washers, or only screws attaching the floor panel to the fuselage.

(e) Remove the floor panel. For aircraft SN: K014, K086 and on, disconnect the Brake Servo Assembly (refer to Chapter 32-40).

Note: Removal of the Brake Servo Assembly is not required. Carefully positioning it to allow access in permitted.

(2) Installation

(a) Position the floor panel over the support structure of the fuselage.

(b) Attach the floor panel to the fuselage using washers and bolts, washers and screws, or only screws, as applicable. For aircraft SN: K014, K086 and on, install the Brake Servo Assembly (refer to Chapter 32-40).

(c) Install the carpet (refer to Chapter 25-10 and 25-20).

(d) Install the seat rails (refer to Chapter 53-40), as applicable.

(e) Install the crew or passenger seats (refer to Chapter 25-10 and 25-20), as applicable.

Figure 53-20.3: Classic and GX Cabin Floor Panels

LEGEND

1. Crew Floor, Left
2. Crew Floor, Right
3. Pedal Panel, Left
4. Pedal Panel, Left Front
5. Pedal Panel, Left Inboard
6. Pedal Panel, Right
7. Pedal Panel, Right Front
8. Throttle Quadrant Floor Panel
9. Crew Floor, Center
10. Crew Floor Assembly, Center
11. Passenger Floor, Left
12. Passenger Floor, Left Front
13. Passenger Floor, Center
14. Passenger Floor, Right
15. Passenger Floor, Spanner
16. Passenger Floor, Right Front
17. Passenger Floor, Aft
18. Cargo Compartment Floor
19. Washer
20. Bolt
21. Screw

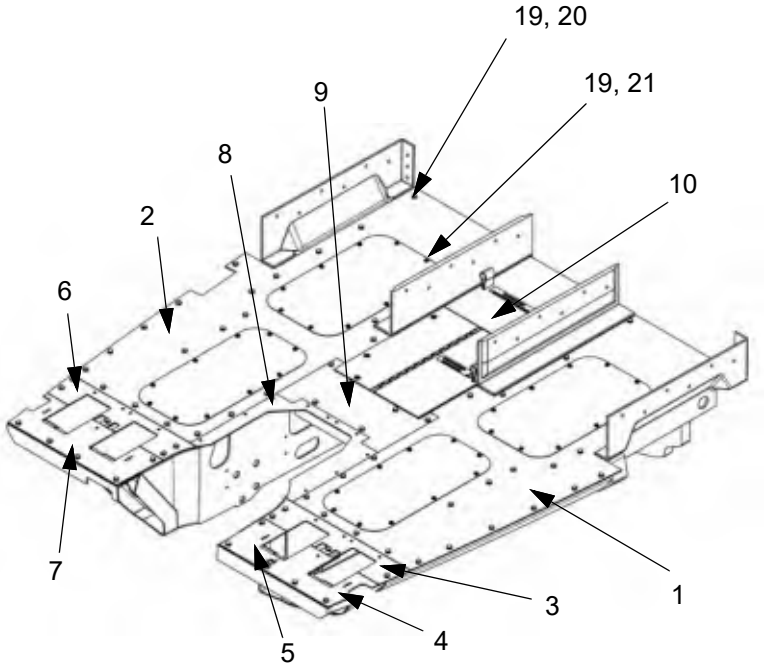

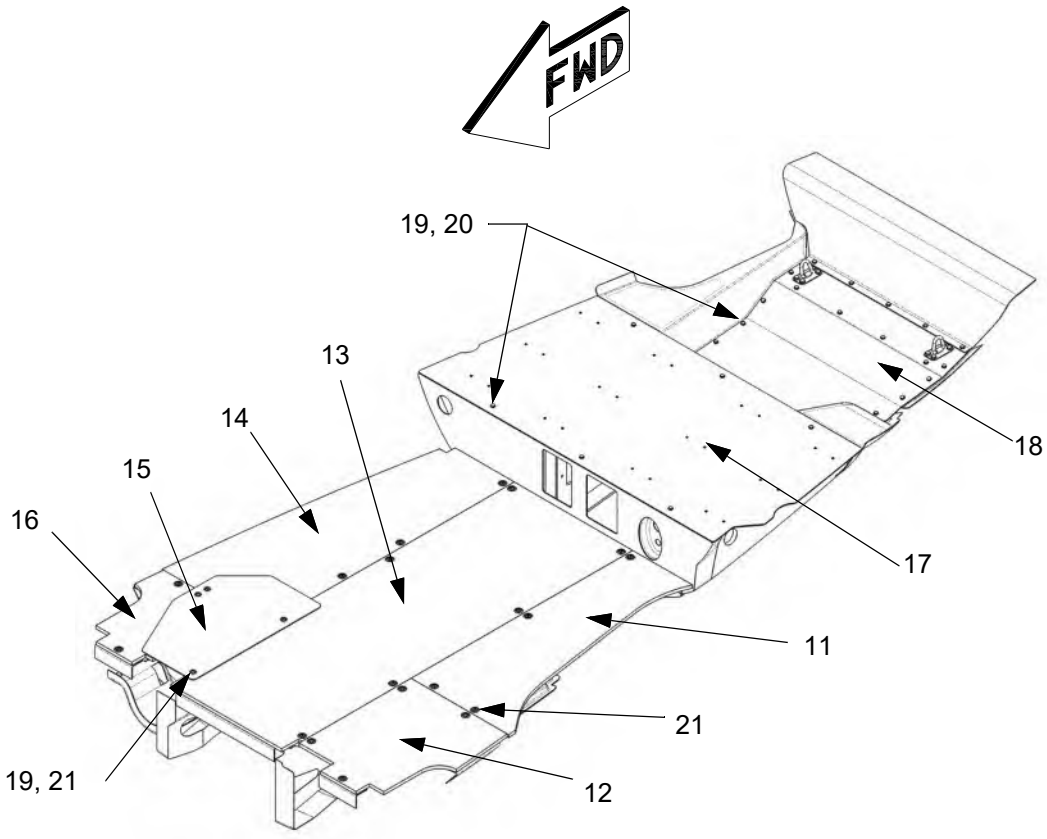

Figure 53-20.4: AX Cabin Floor Panels

LEGEND

1. Crew Floor, Left
2. Crew Floor, Right
3. Pedal Panel, Left
4. Pedal Panel, Left Front
5. Pedal Panel, Left Inboard
6. Pedal Panel, Right
7. Pedal Panel, Right Front
8. Throttle Quadrant Floor Panel
9. Crew Floor, Center
10. Crew Floor Assembly, Center
11. Passenger Floor, Left
12. Passenger Floor, Left Front
13. Passenger Floor, Center
14. Passenger Floor, Right
15. Passenger Floor, Spanner
16. Passenger Floor, Right Front
17. Passenger Floor, Aft
18. Cargo Compartment Floor
19. Washer
20. Bolt
21. Screw
22. Brake Servo
23. Brake Servo Floor Panel

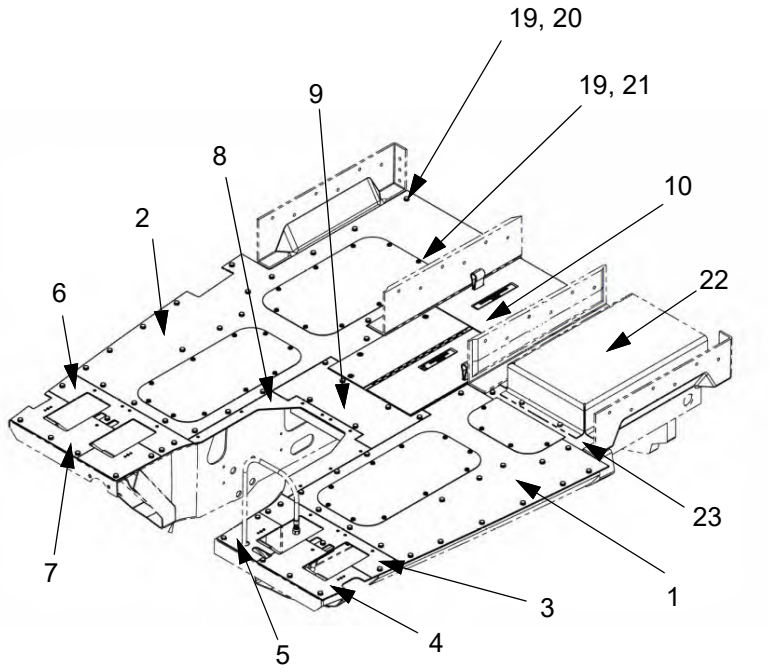

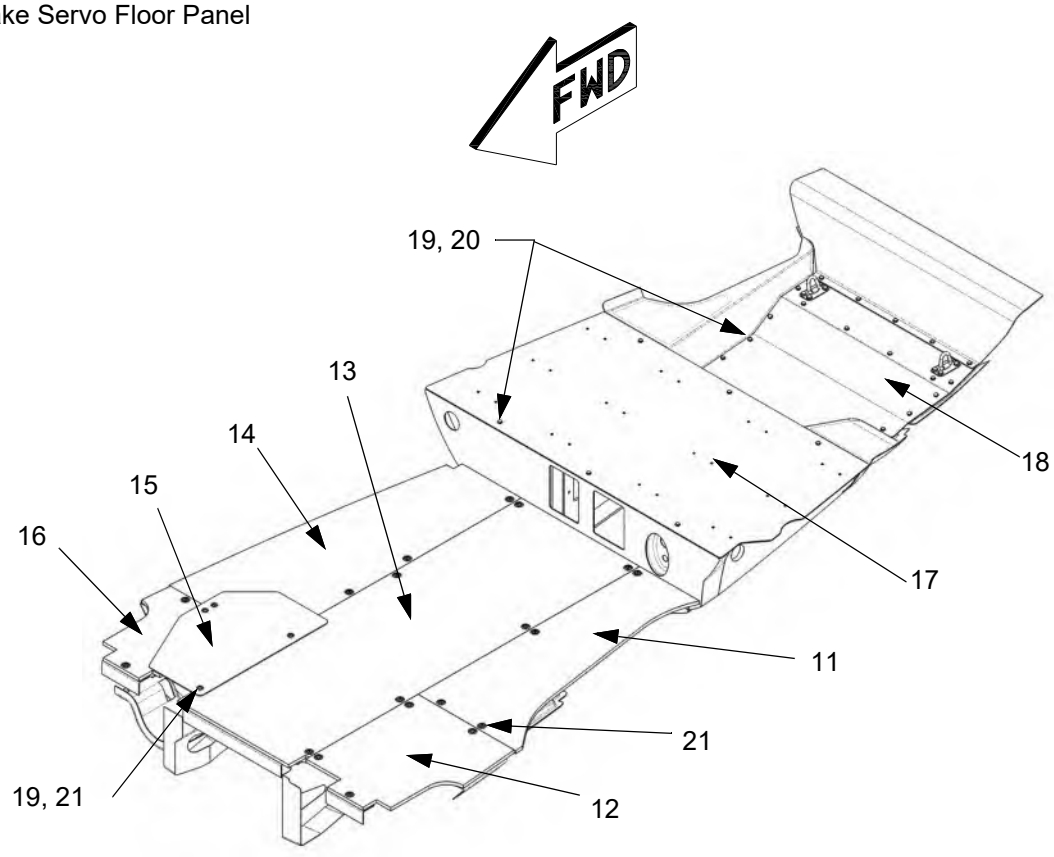

This Page Intentionally Left Blank

ATTACH FITTINGS

1. Description

Fittings for attaching components to the fuselage include those for the wings (refer to Chapter 57), the landing gear (refer to Chapter 32), the doors (refer to Chapter 52), the engine (refer to chapter 72), and the seats.

Aluminum rails mounted to the wing spar saddle support and attach the crew seats to the airplane. The rails let the seats to be adjusted front to back using locking pins to secure the position.

Aluminum rails mounted to the wing spar saddle and to the air conditioning equipment enclosure support and attach the passenger seats to the airplane.

2. Maintenance Practices

Note: Protect the fasteners attaching aluminum components to carbon fiber components against corrosion (refer to Chapter 51-40). Do not get corrosion protection material on the threads of the fasteners.

A. Crew Seat Rail

(1) Removal

(a) Remove the crew seat of the seat rail to be removed (refer to Chapter 25-10).

(b) For the outboard seat rails, remove the three screws attaching the lower interior finish panel to the seat rail.

(c) Remove the twelve bolts and washers attaching the seat rail to the spar saddle and the seat forward support.

Note: Two of the outboard bolts and washers of the outboard seat rails attach the oxygen outlet/mic jack support bracket to the seat rail. Note the location of this bracket for re-installation.

(d) Remove the seat rail.

(2) Installation

(a) Align the seat rail and oxygen outlet/mic jack bracket bolt holes (if applicable) with the attachment holes in the spar saddle and the seat front support.

(b) Install twelve bolts and washers to attach the seat rail to the spar saddle and the seat forward support.

(c) For the outboard seat rails, install the three screws attaching the lower interior finish panel to the seat rail.

(d) Install the crew seat (refer to Chapter 25-10).

B. Middle Passenger Seat Rail

(1) Removal

Note: The mid-passenger seat rail and channel are not symmetrical. Mark aircraft forward on the mid-passenger seat rail and the channel before removal.

(a) Remove the middle passenger seat of the seat rail to be removed (refer to Chapter 25-20).

(b) Remove the seat rail cover from the seat to be removed (refer to Chapter 25-20).

(c) Remove the eight bolts and washers attaching the middle passenger seat rail to the channel spacer.

(d) Remove the seat rail.

(e) If necessary, remove the eight bolts and washers securing the spacer to the channel then remove the spacer.

(2) Installation

Note: Make sure to orient the mid-passenger seat rail and the channel with the correct end forward. If they are installed incorrectly, the seat will be difficult to install.

(a) If it has been removed, install the spacer onto the channel then attach it using 8 bolts and washers.

(b) Align the seat rail with the attachment holes in the spacer.

(c) Secure the rail to the spacer using eight bolts and washers.

(d) Install the seat rail cover (refer to Chapter 25-20).

(e) Install the seat (refer to Chapter 25-20).

C. Aft Passenger Seat Rail

(1) Removal

(a) Remove the aft passenger seat of the seat rail to be removed (refer to Chapter 25-20).

(b) Remove the carpeted panel over the seat rails.

(c) Remove the six bolts and washers attaching the aft passenger seat rail to the top of the air conditioning evaporator enclosure.

(d) Remove the seat rail.

(2) Installation

(a) Align the seat rail with the attachment holes in the top of the air conditioning evaporator enclosure.

(b) Install the carpeted panel over the seat rails.

(c) Install the seat (refer to Chapter 25-20).

Figure 53-40.1: Seat Rails (Sheet 1 of 4)

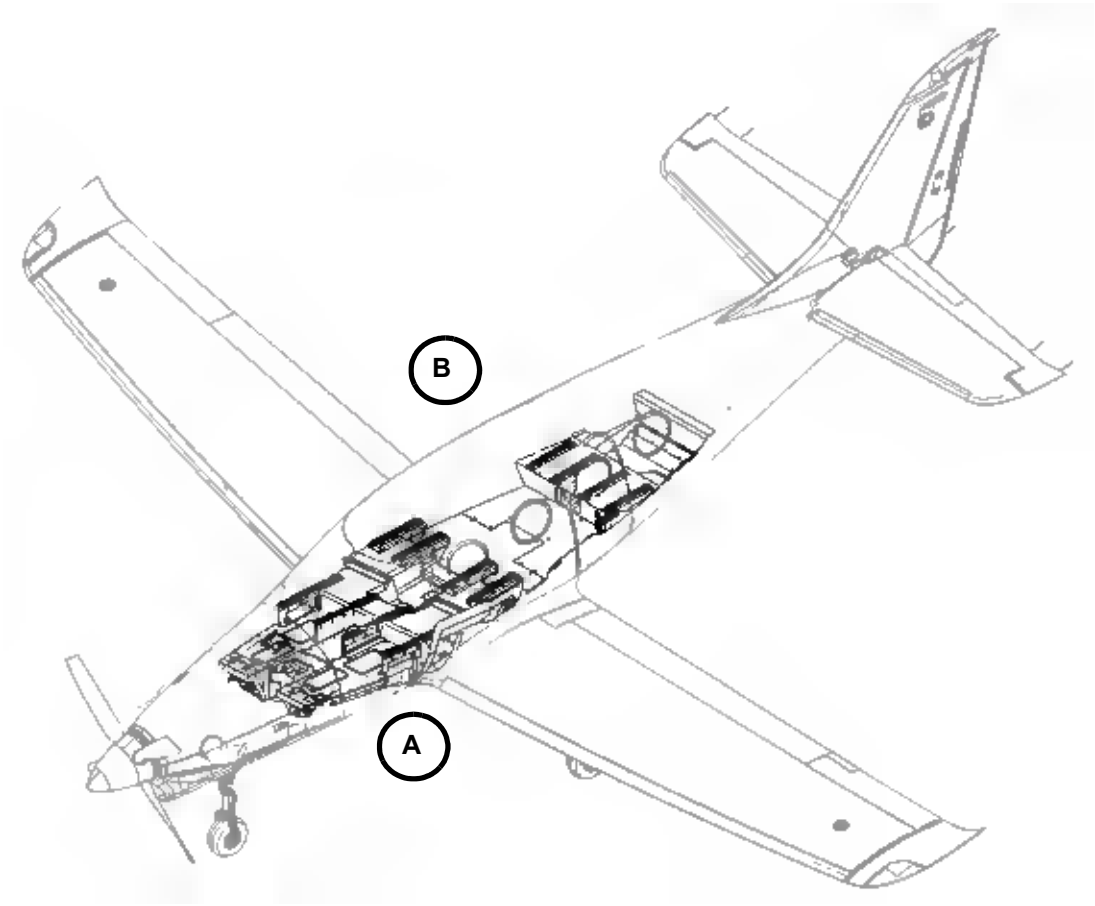

LEGEND

1. Rail, Crew, Outboard Left
2. Rail, Crew, Inboard Left
3. Rail, Crew, Inboard Right
4. Rail, Crew, Outboard Right
5. Rail, Passenger Aft
6. Rail, Passenger Mid
8. Channel, Passenger, Outer Left
9. Channel, Passenger, Inner Left
10. Channel, Passenger, Inner Right
11. Channel, Passenger, Outer Right
12. Spacer
13. Oxygen Outlet / Mic Jack Bracket
14. Washer
15. Bolt

Carpeting, valences, seat rail covers, and spar box covers not shown for clarity.

Figure 53-40.1: Seat Rails (Sheet 2 of 4)

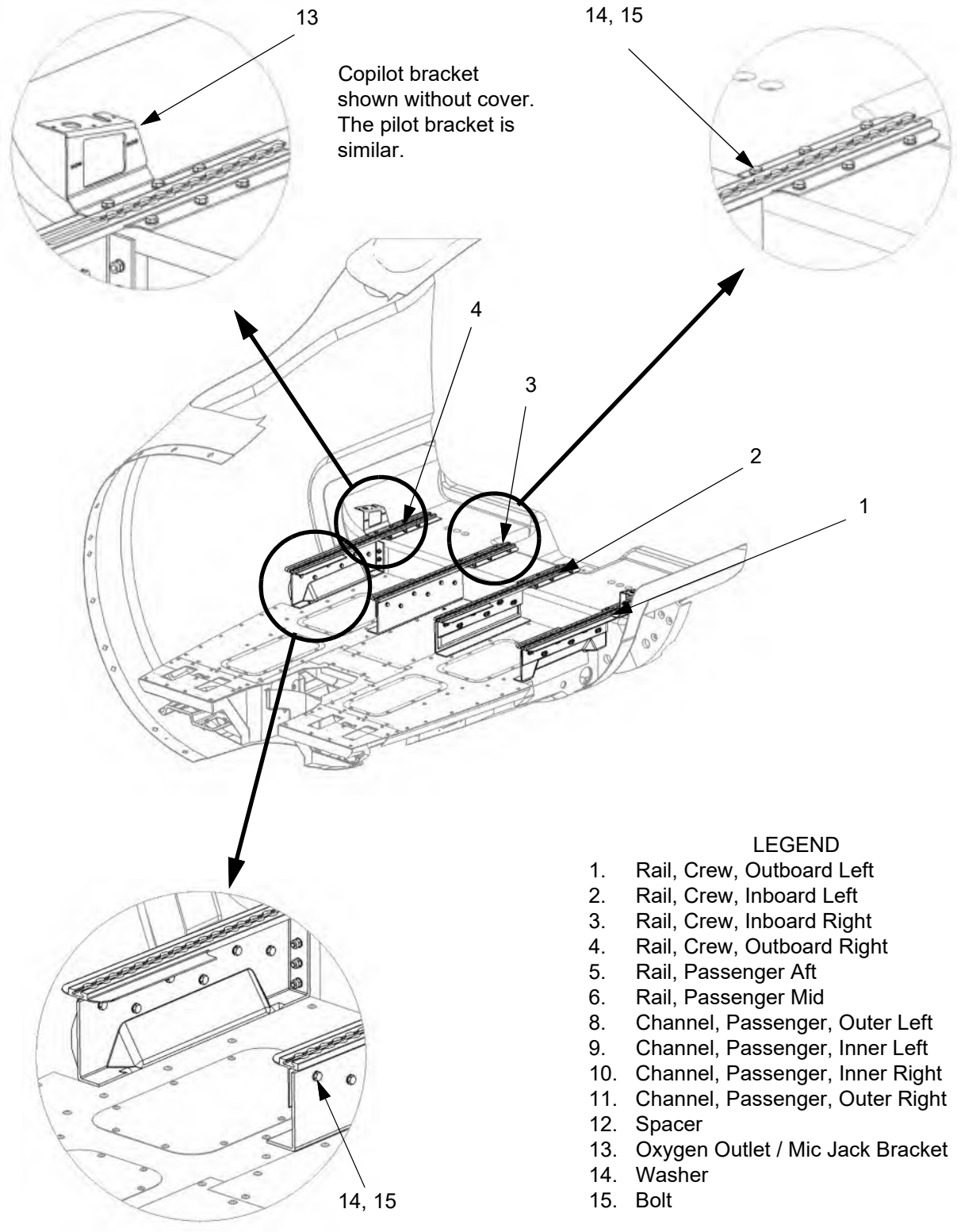

LEGEND

1. Rail, Crew, Outboard Left
2. Rail, Crew, Inboard Left
3. Rail, Crew, Inboard Right
4. Rail, Crew, Outboard Right
5. Rail, Passenger Aft
6. Rail, Passenger Mid
8. Channel, Passenger, Outer Left
9. Channel, Passenger, Inner Left
10. Channel, Passenger, Inner Right
11. Channel, Passenger, Outer Right
12. Spacer
13. Oxygen Outlet / Mic Jack Bracket
14. Washer
15. Bolt

Figure 53-40.1: Seat Rails (Sheet 3 of 4)

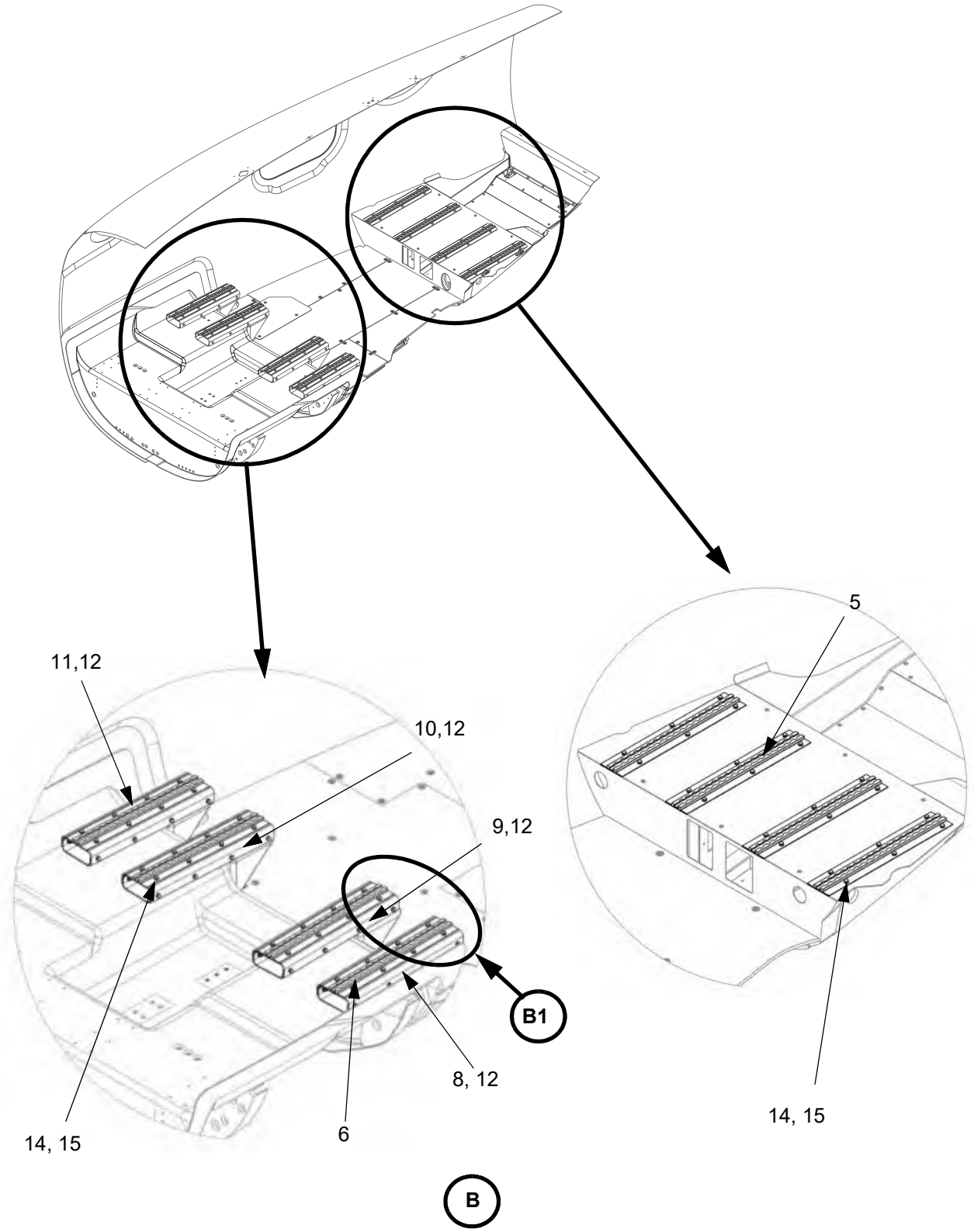

Figure 53-40.1: Seat Rails (Sheet 4 of 4)

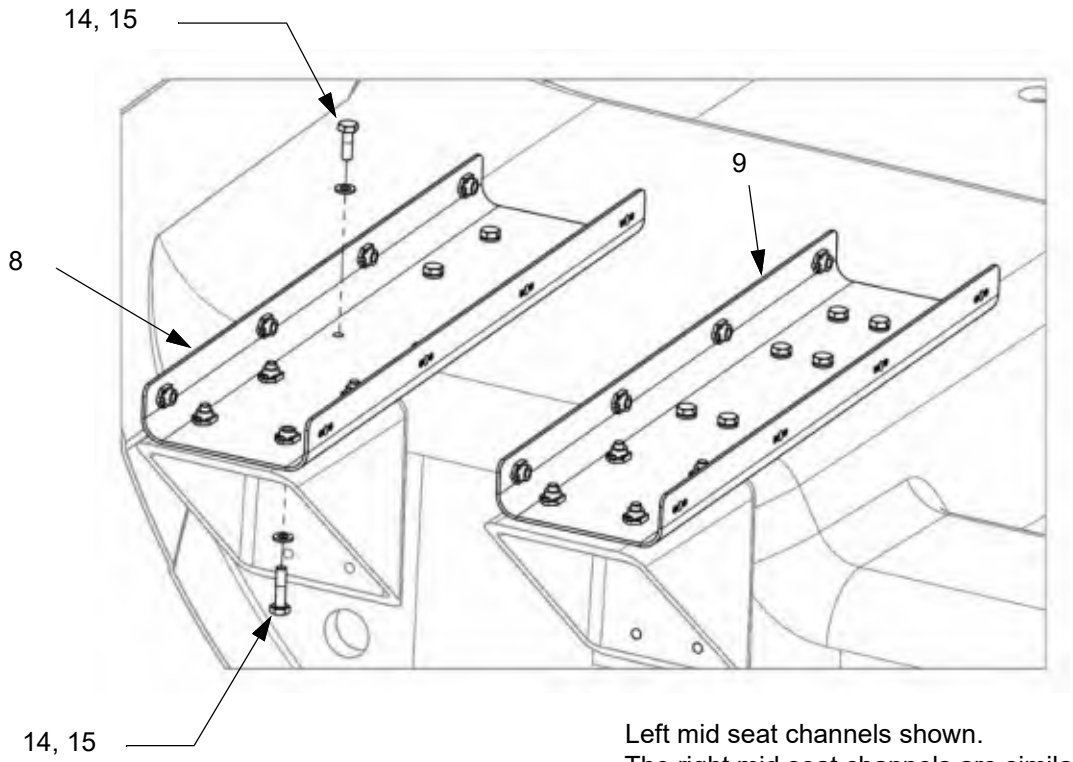

Left mid seat channels shown.
The right mid seat channels are similar.

B1

LEGEND

1. Rail, Crew, Outboard Left
2. Rail, Crew, Inboard Left
3. Rail, Crew, Inboard Right
4. Rail, Crew, Outboard Right
5. Rail, Passenger Aft
6. Rail, Passenger Mid
8. Channel, Passenger, Outer Left
9. Channel, Passenger, Inner Left
10. Channel, Passenger, Inner Right
11. Channel, Passenger, Outer Right
12. Spacer
13. Oxygen Outlet / Mic Jack Bracket
14. Washer
15. Bolt

ELECTRICAL HARNESS

1. Description

This chapter gives information and procedures for the fuselage electrical harnesses.

Eight electrical wiring harnesses are used to connect the flaps motor, hydraulic system, fuel pumps, weight on wheel switches, gear up switches, gear down switches, cabin pressurization valves, auto pilot system, avionics, and interior lights to the airplane electrical system.

2. Maintenance Practices

A. Wheel Well Electrical Harness

(1) Removal

(a) Set the BATT 1 and BATT 2 switches to OFF.

(b) Disconnect external electrical power from the airplane (refer to Chapter 24-40).

(c) Remove the cowling (refer to Chapter 71-10).

(d) Disconnect the batteries by disconnecting the negative battery cables first then the positive battery cables.

WARNING: To reduce the possibility of personal injury and equipment damage, disconnect the negative battery cable before disconnecting the positive battery cable.

(e) Insulate the battery terminals.

(f) Remove the belly panels (refer to Chapter 57-10).

(g) Disconnect the equipment and components connected to the wiring harness.

(h) Tag the connectors.

(i) Cut and remove cable ties.

(j) Remove clamps.

(k) Disconnect the wiring harness wing saddle connector and the coax wheel well disconnect.

(l) Remove the electrical harness from the airplane.

(2) Installation

(a) Make connections to the tagged connectors.

(b) Attach the harness using cable ties and clamps.

(c) Connect the harness to the wing saddle connector and the coax wheel well disconnect.

(d) Connect the batteries starting with the positive battery cables then the negative cables.

WARNING: To reduce the possibility of personal injury and equipment damage, connect the positive battery cable before connecting the negative battery cable.

(e) Do an operational check of the wings and the cockpit instrumentation.

(f) Install the belly panels (refer to Chapter 57-10).

(g) Install the cowling (refer to Chapter 71-10).

Figure 53-80.1: Wheel Well Electrical Harness (Sheet 1 of 5)

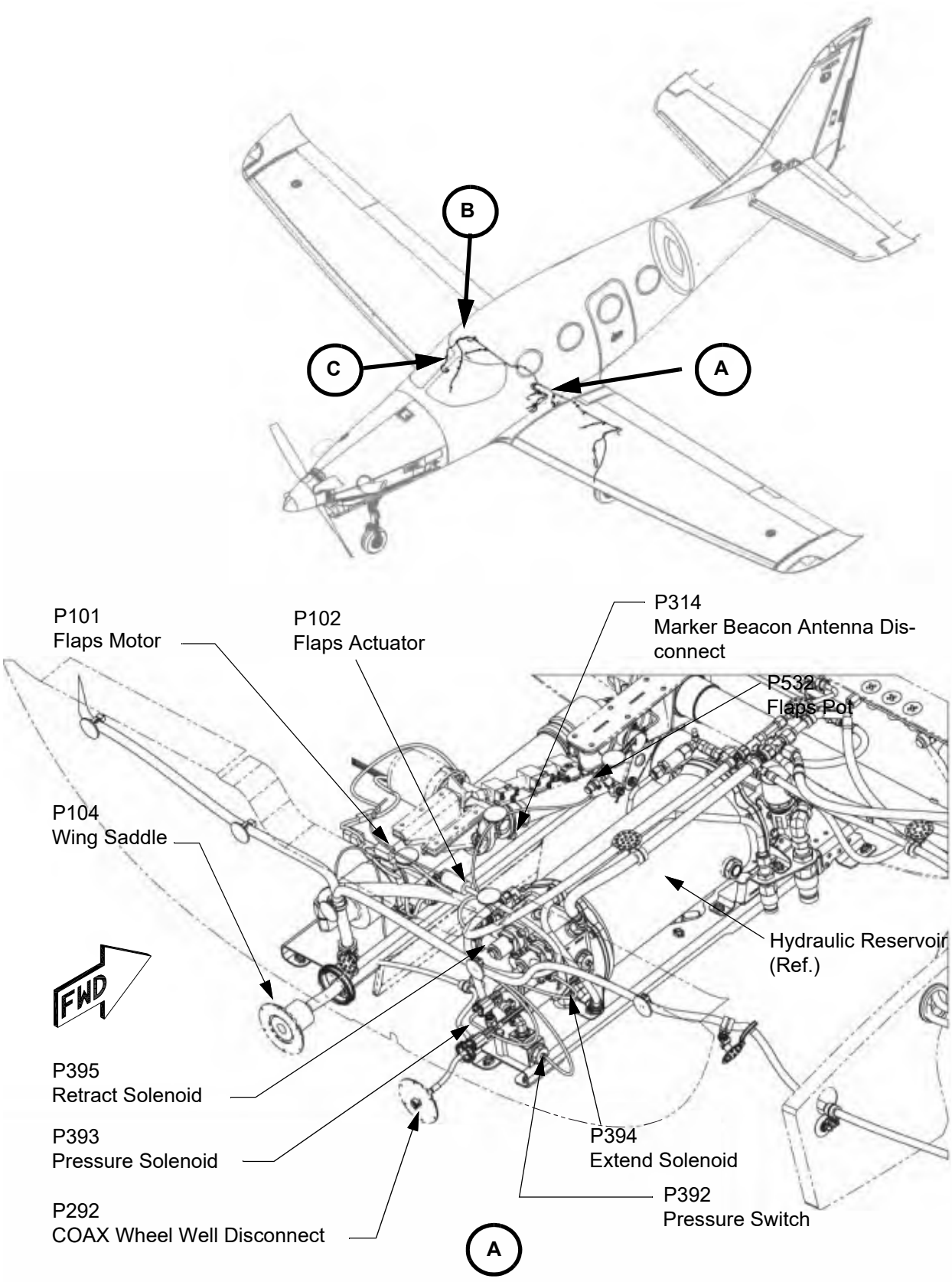

Figure 53-80.1: Wheel Well Electrical Harness (Sheet 2 of 5)

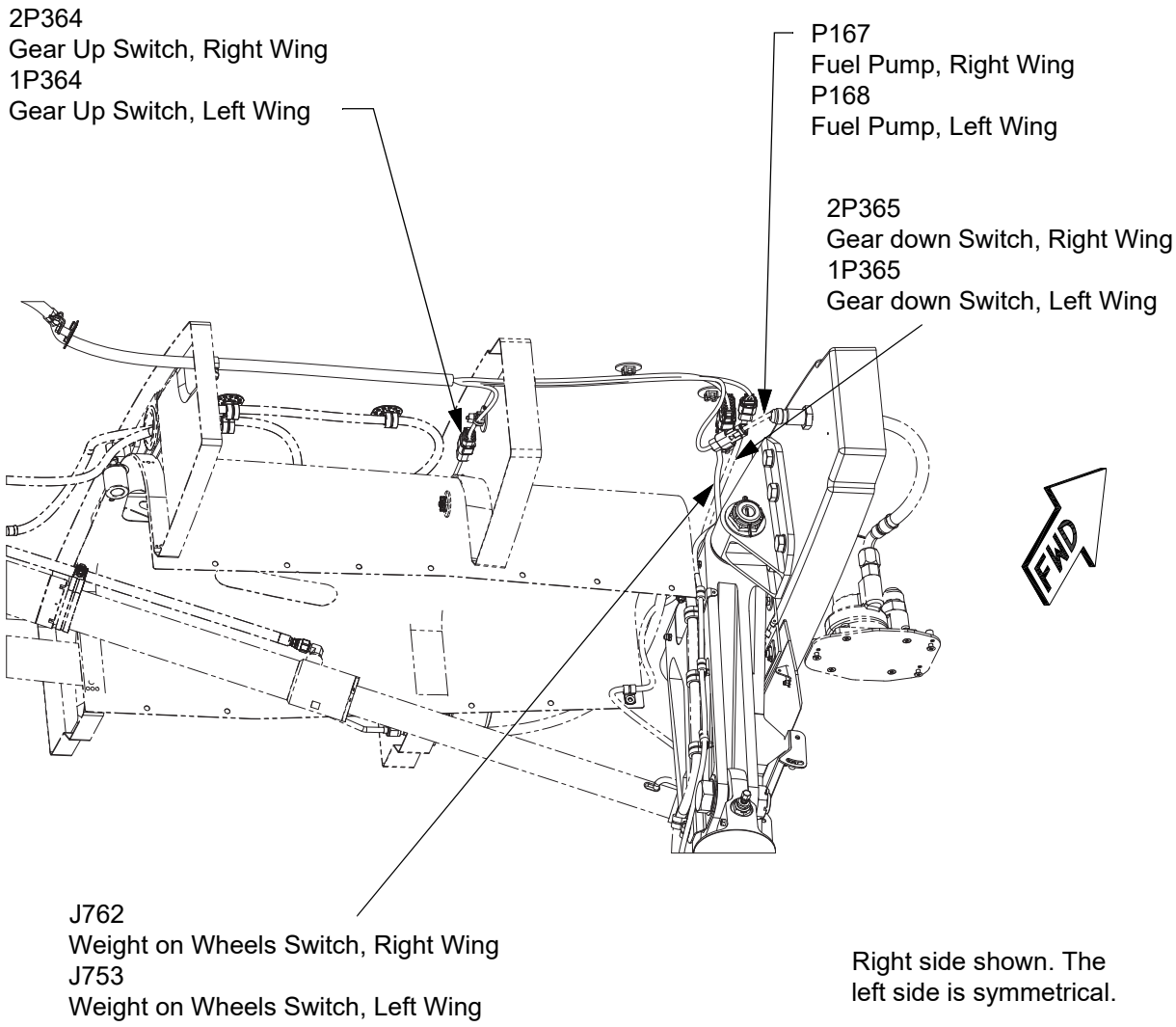

B

Figure 53-80.1: Wheel Well Electrical Harness (Sheet 3 of 5)

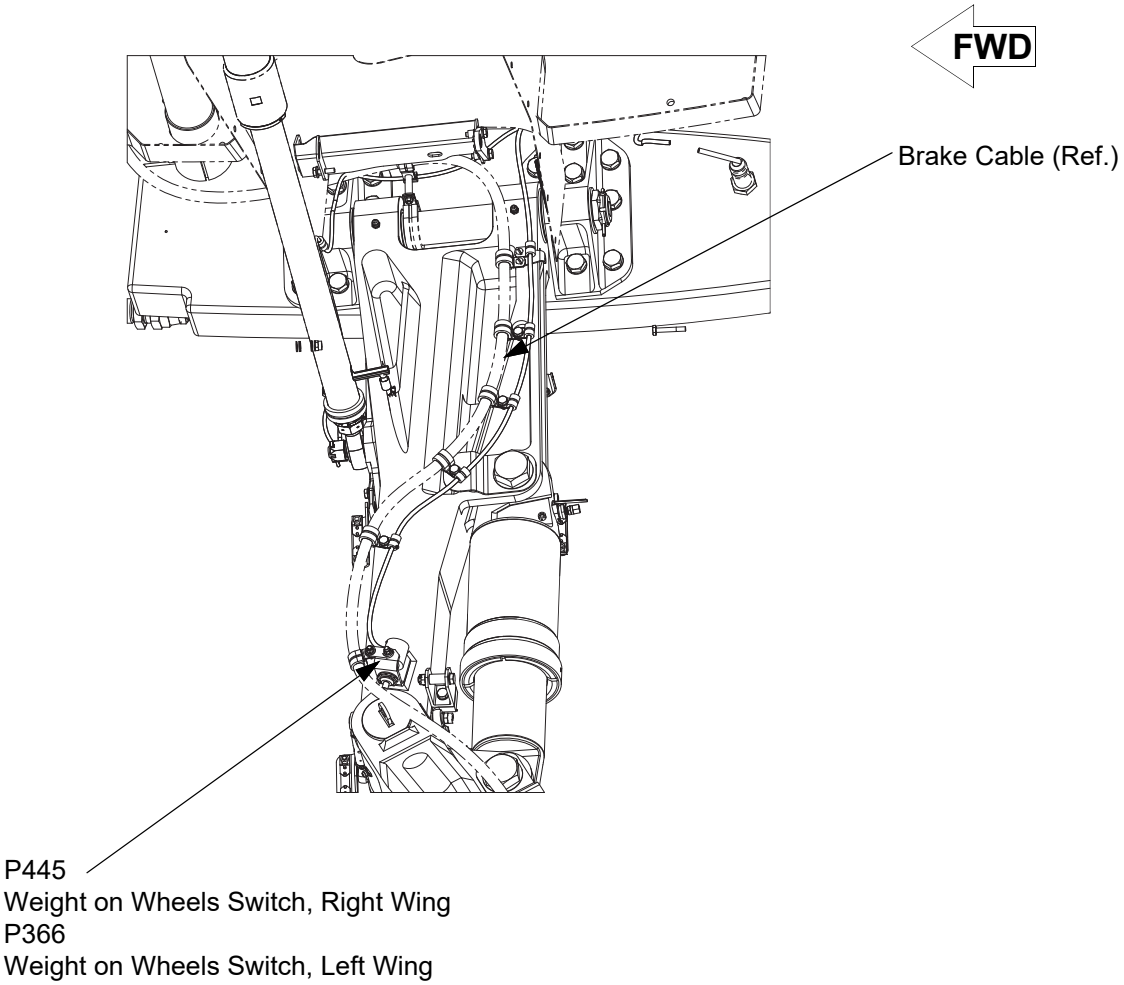

Figure 53-80.1: Wheel Well Electrical Harness (Sheet 4 of 5)

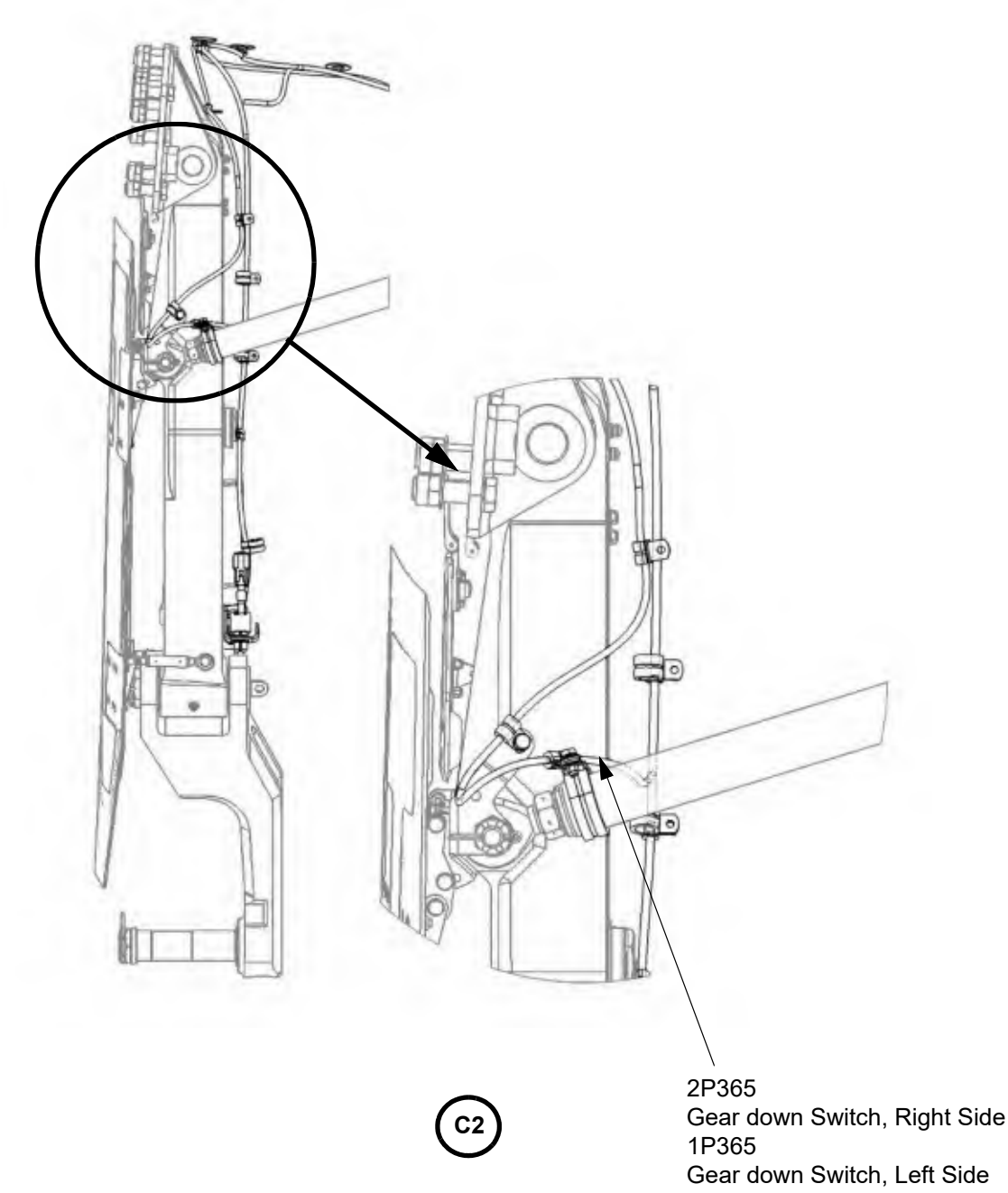

EXTENDED POSITION
RIGHT GEAR LEG
FRONT VIEW

Figure 53-80.1: Wheel Well Electrical Harness (Sheet 5 of 5)

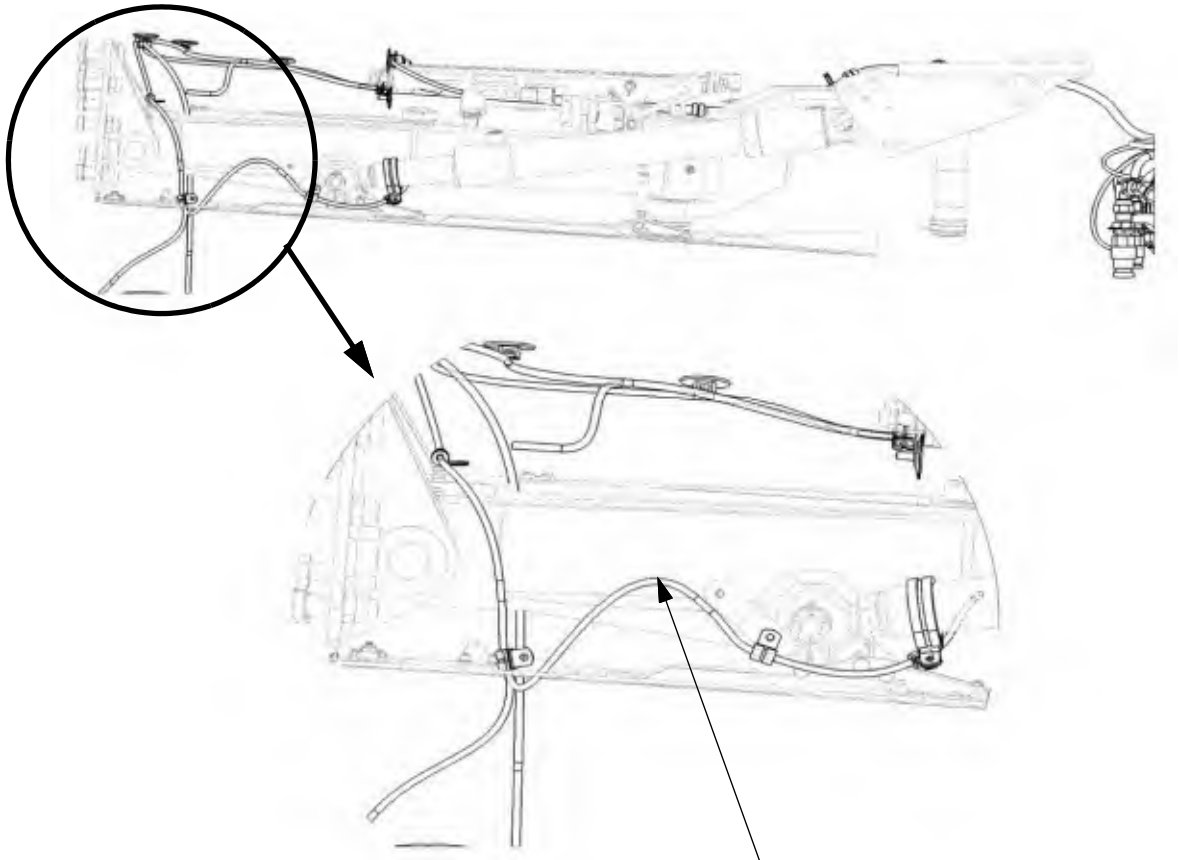

B. Main Cabin Electrical Harness

(1) Removal

(a) Set the BATT 1 and BATT 2 switches to OFF.

(b) Disconnect external electrical power from the airplane (refer to Chapter 24-40).

(c) Remove the cowling (refer to Chapter 71-10).

(d) Disconnect the batteries by disconnecting the negative battery cables first then the positive battery cables.

WARNING: To reduce the possibility of personal injury and equipment damage, disconnect the negative battery cable before disconnecting the positive battery cable.

(e) Insulate the battery terminals.

(f) Remove the seats, interior panels, and insulation as necessary. Refer to Chapter 25-10, 25-50, and 25-80.

(g) Remove the passenger cabin carpet and floor, as necessary. Refer to Chapter 25-20 and 53-20.

(h) Disconnect the equipment and components connected to the wiring harness to be removed.

(i) Tag the connectors.

(j) Cut and remove cable ties.

(k) Remove clamps.

(l) Disconnect the wiring harness from the forward and aft pressure bulkhead connectors and the coax disconnect, as applicable.

(m) Remove the electrical harness from the airplane.

(2) Installation

(a) Make connections to the tagged connectors.

(b) Attach the harness using cable ties and clamps.

(c) Connect the harness to the forward and aft pressure bulkhead connectors and the coax disconnect, as applicable.

(d) Connect the batteries starting with the positive battery cables then the negative cables.

WARNING: To reduce the possibility of personal injury and equipment damage, connect the positive battery cable before connecting the negative battery cable.

(e) Do an operational check of the cockpit instrumentation.

(f) Install the cowling (refer to Chapter 71-10).

(g) Install the passenger cabin floor and carpet, as necessary. Refer to Chapter 25-20 and 53-20.

(h) Install the seats, interior panels, and insulation as necessary. Refer to Chapter 25-10, 25-50, and 25-80.

Figure 53-80.2: Main Cabin Power and Ground Harness (Sheet 1 of 3)

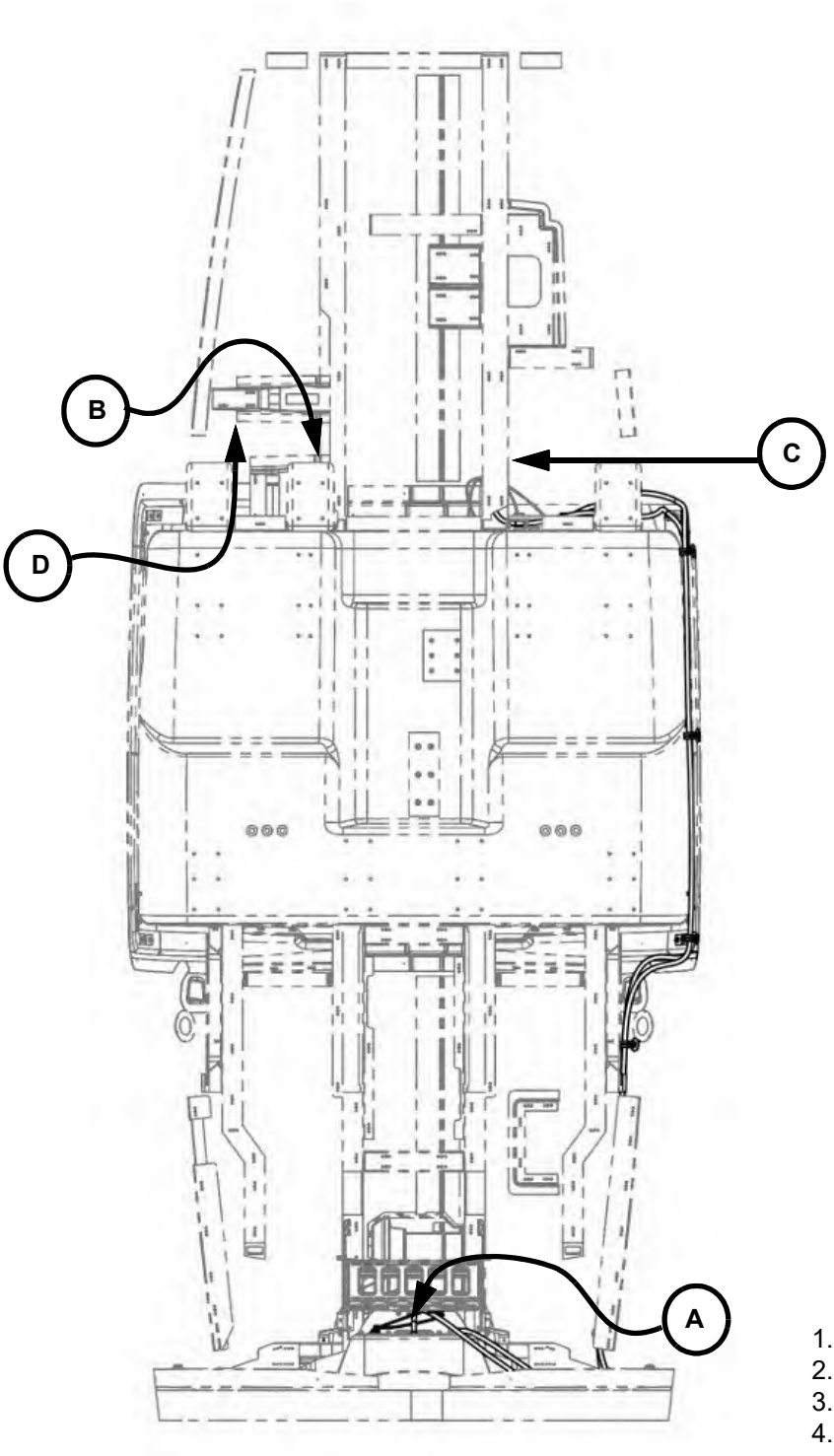

LEGEND

1. Link
2. Washer
3. Locknut
4. Cover

Figure 53-80.2: Main Cabin Power and Ground Harness (Sheet 2 of 3)

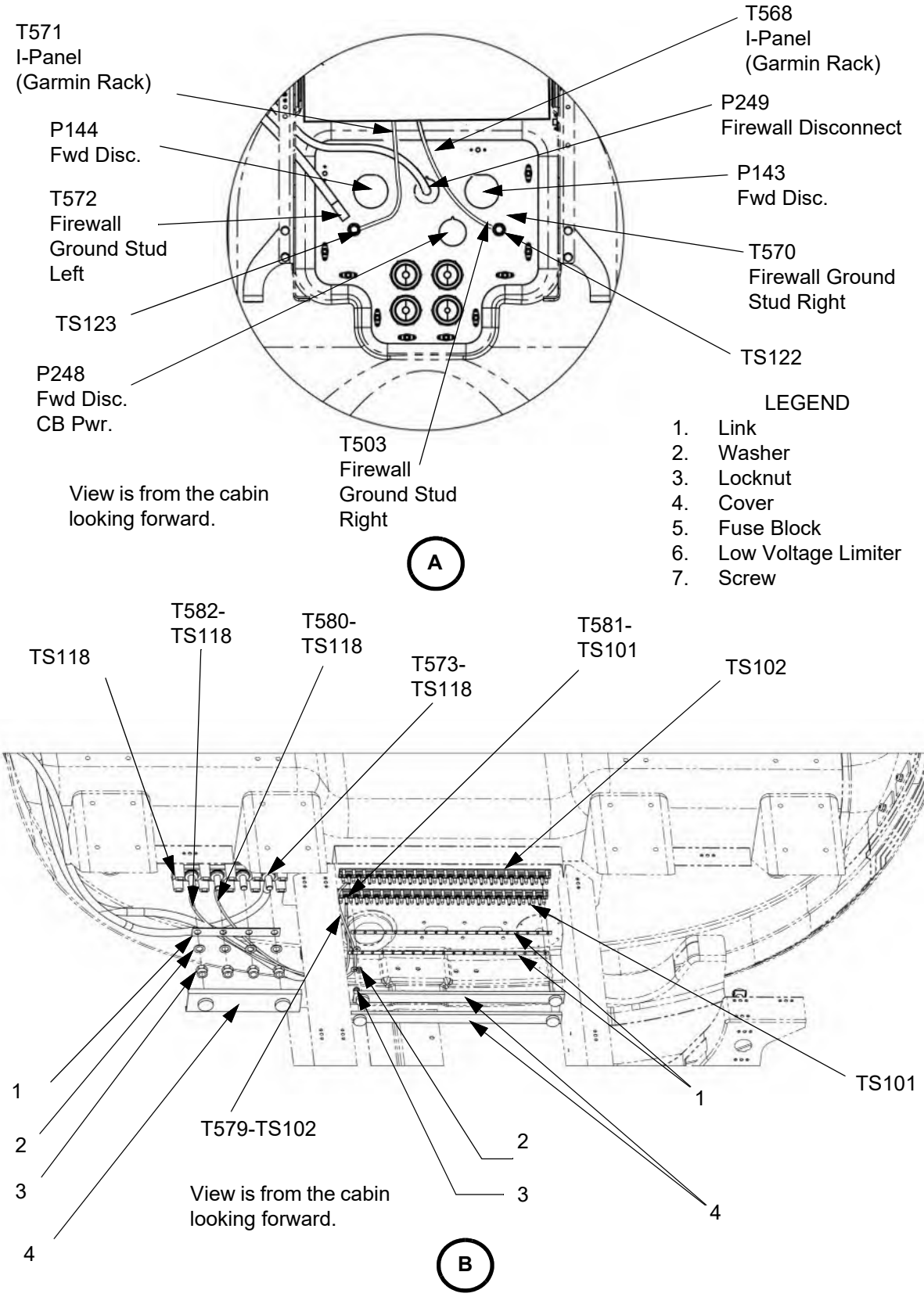

Figure 53-80.2: Main Cabin Power and Ground Harness (Sheet 3 of 3)

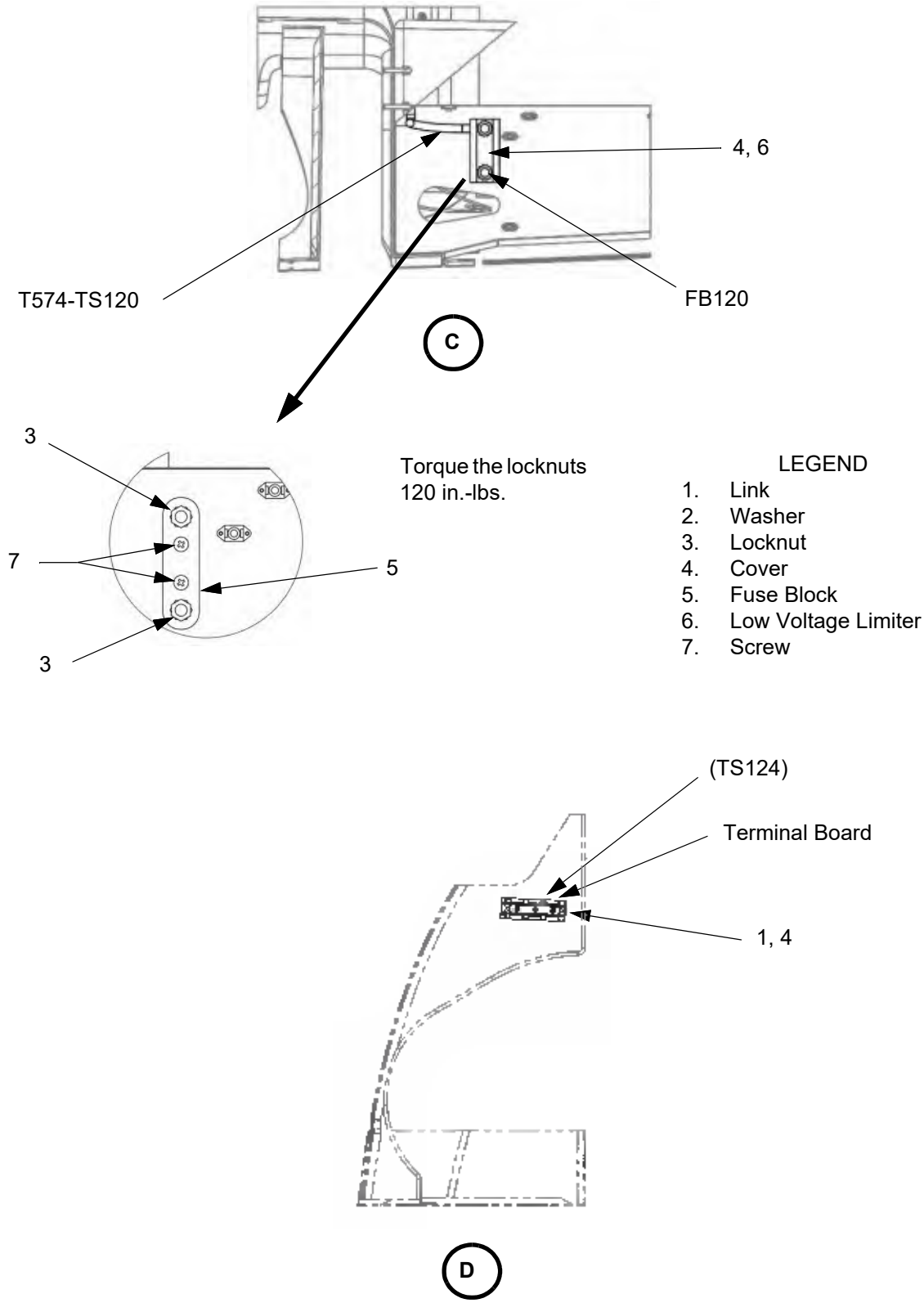

Figure 53-80.3: Main Cabin Electrical Harness (Sheet 1 of 9)

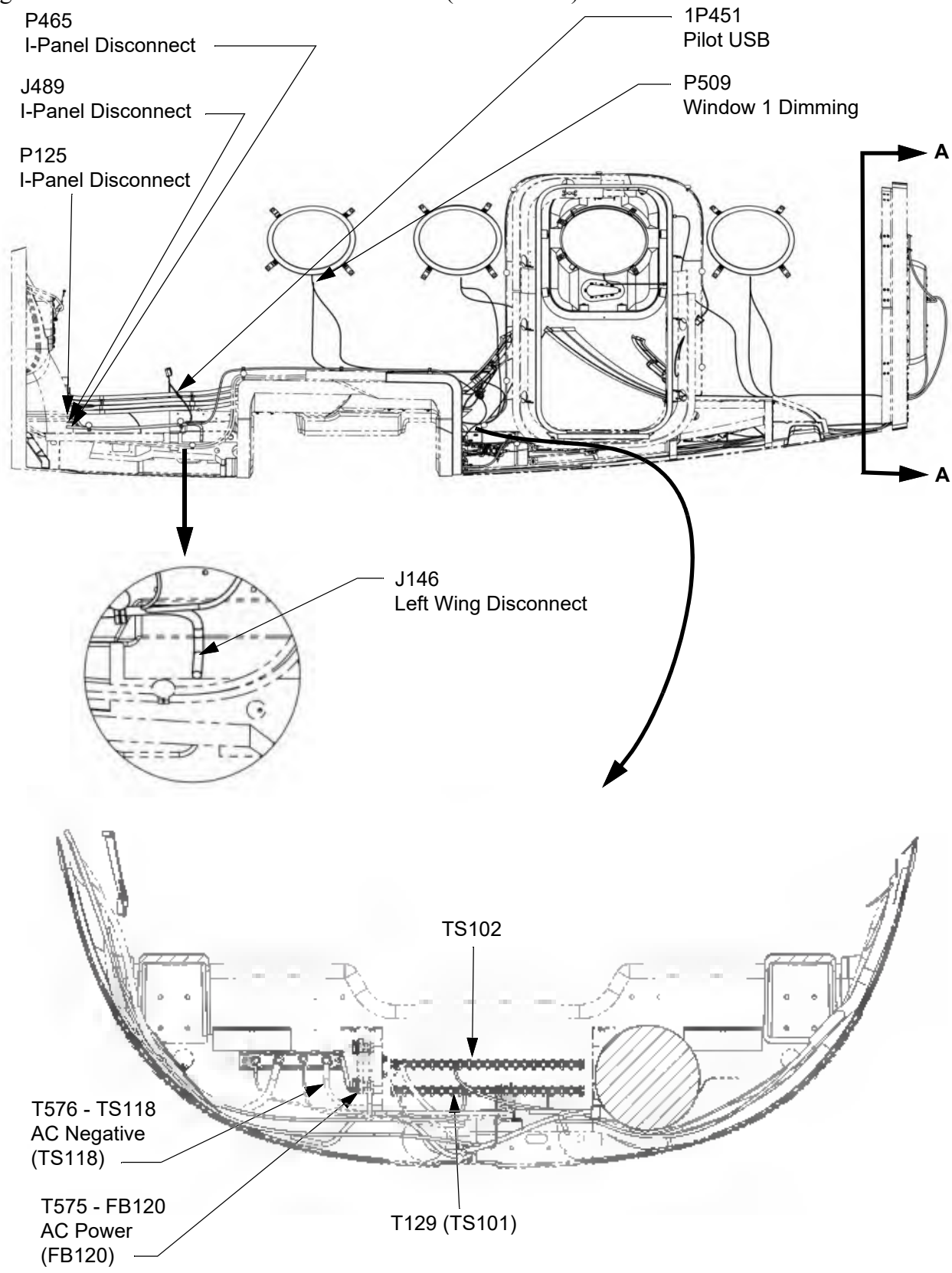

Figure 52-8.3: Main Cabin Electrical Harness (Sheet 2 of 9)

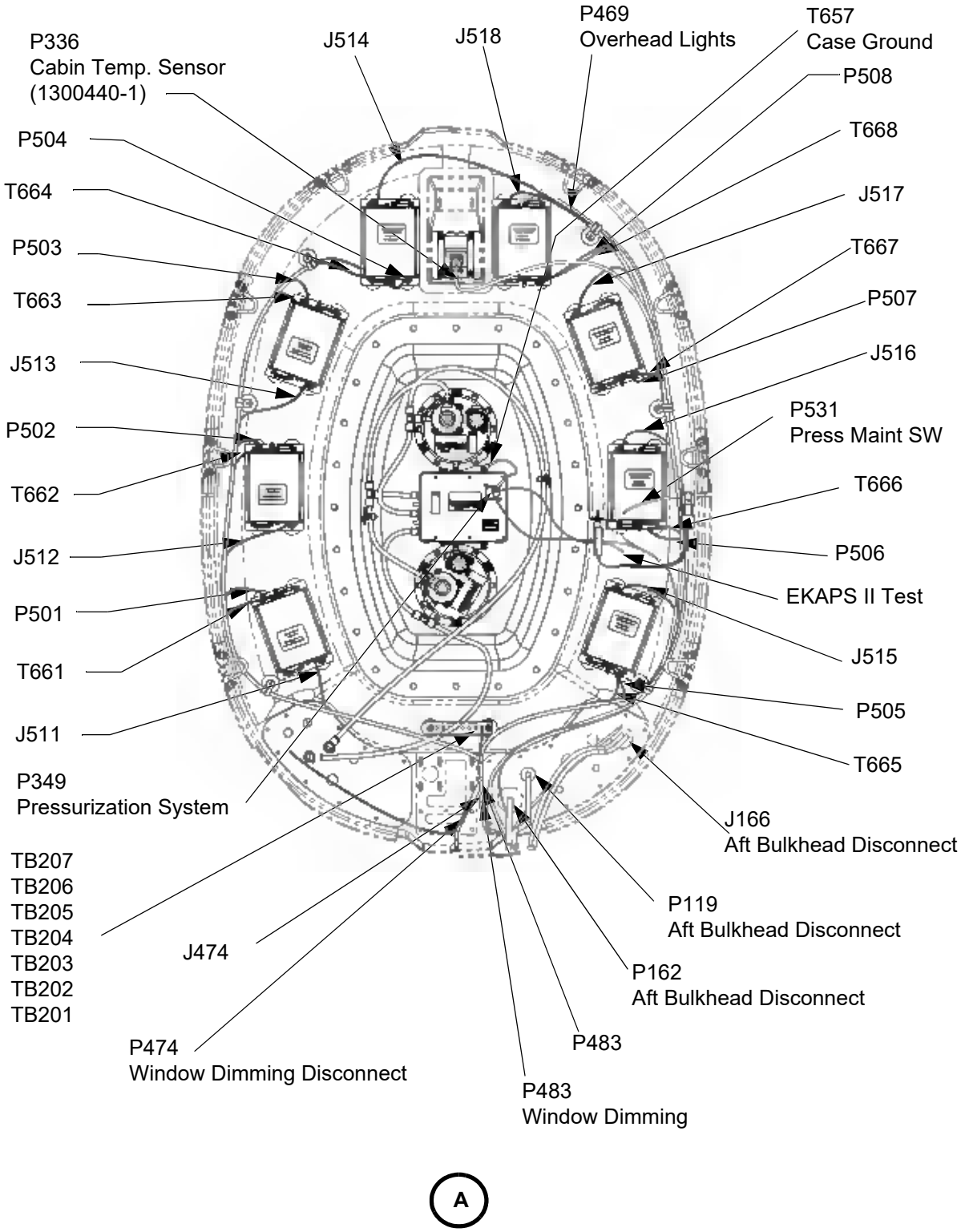

Figure 52-8.3: Main Cabin Electrical Harness (Sheet 3 of 9)

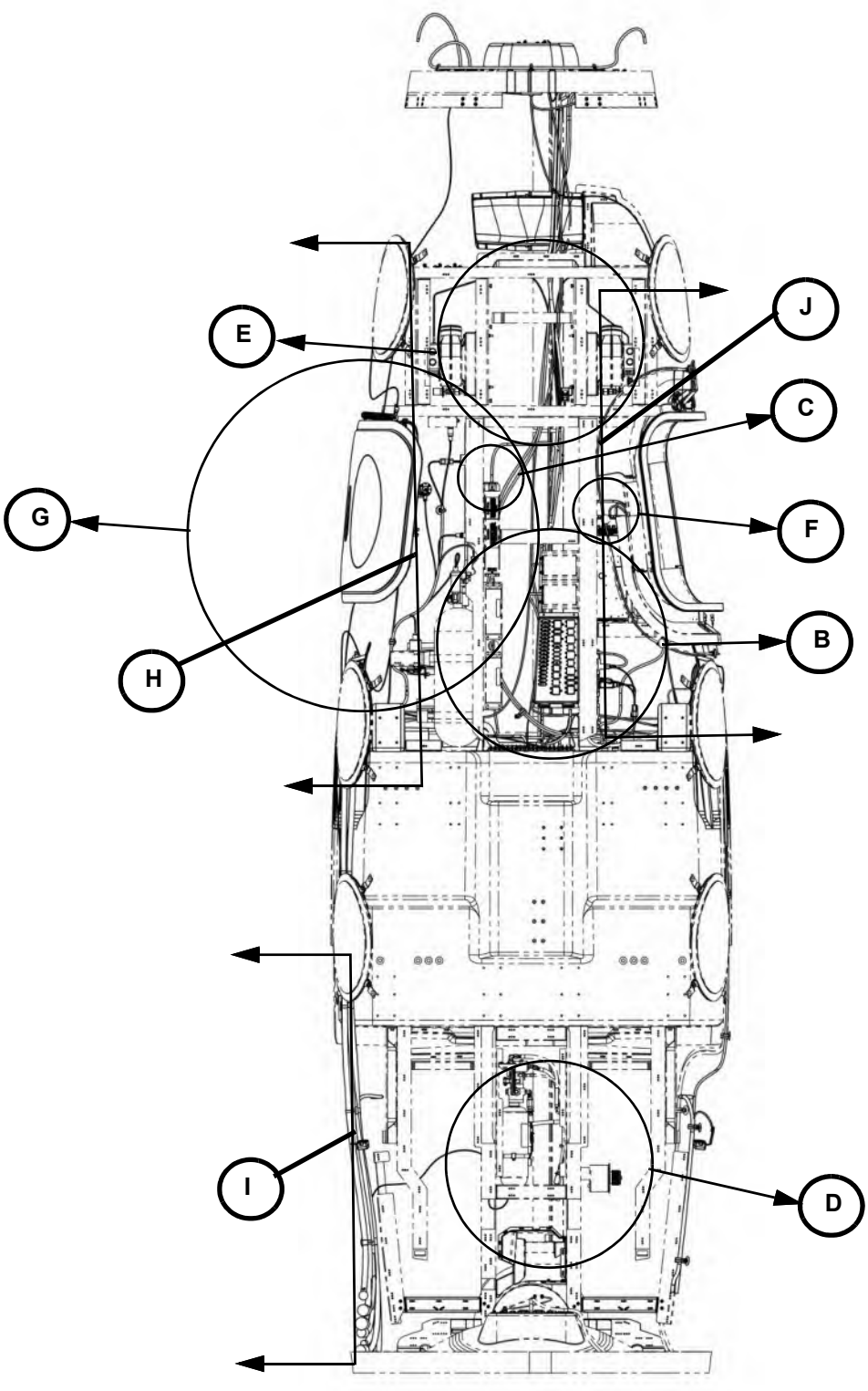

Figure 52-8.3: Main Cabin Electrical Harness (Sheet 4 of 9)

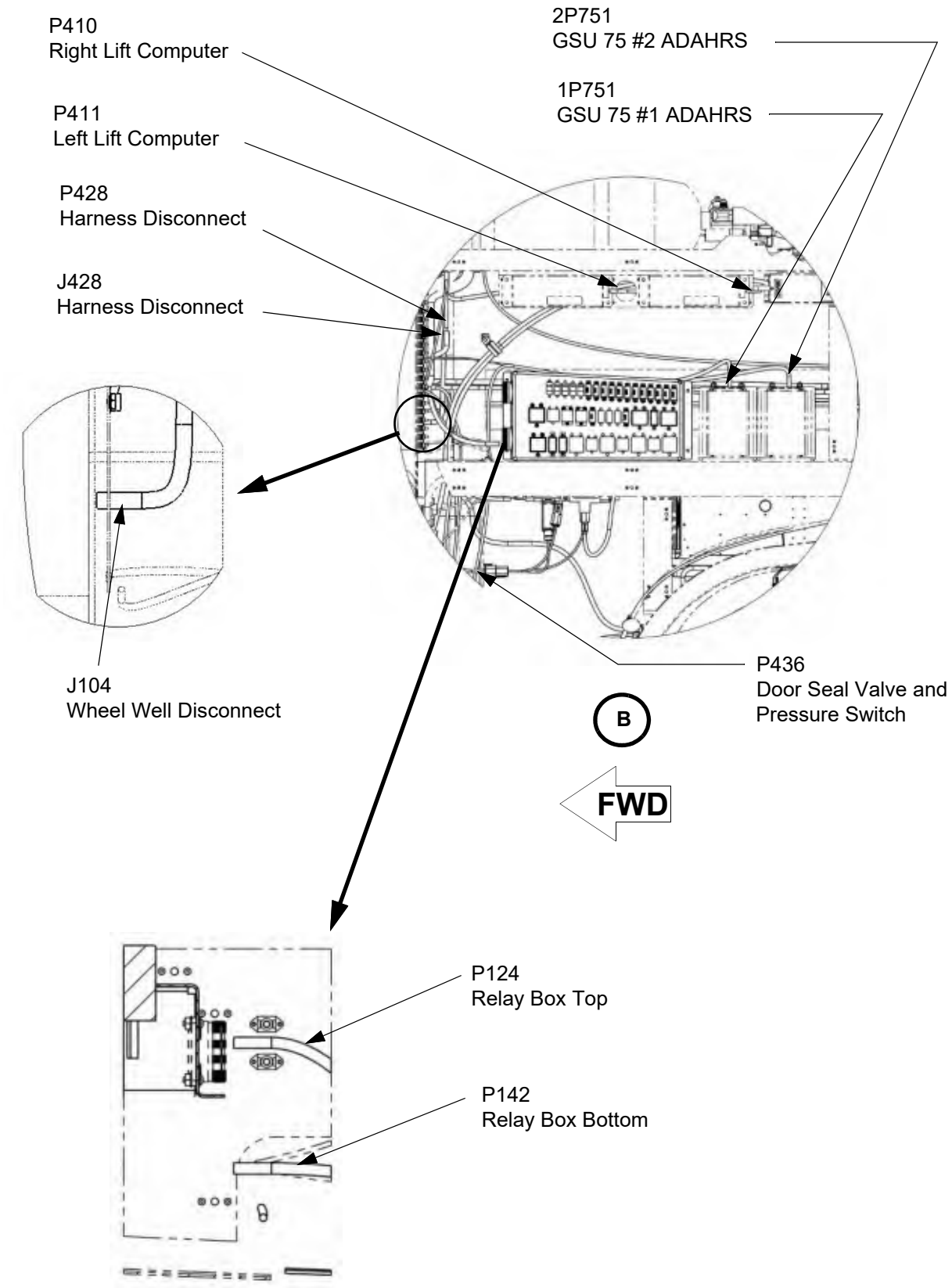

Figure 52-8.3: Main Cabin Electrical Harness (Sheet 5 of 9)

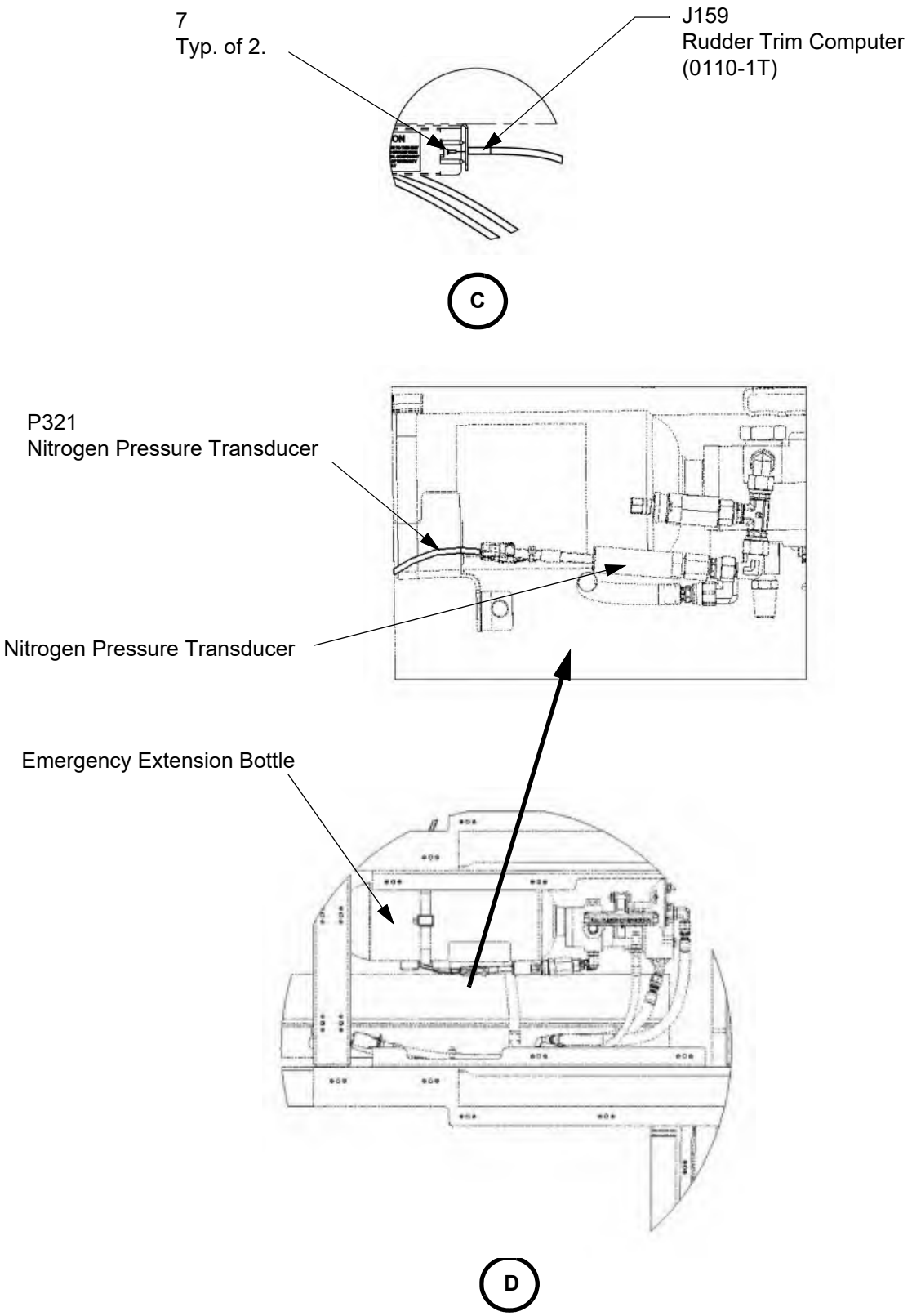

Figure 52-8.3: Main Cabin Electrical Harness (Sheet 6 of 9)

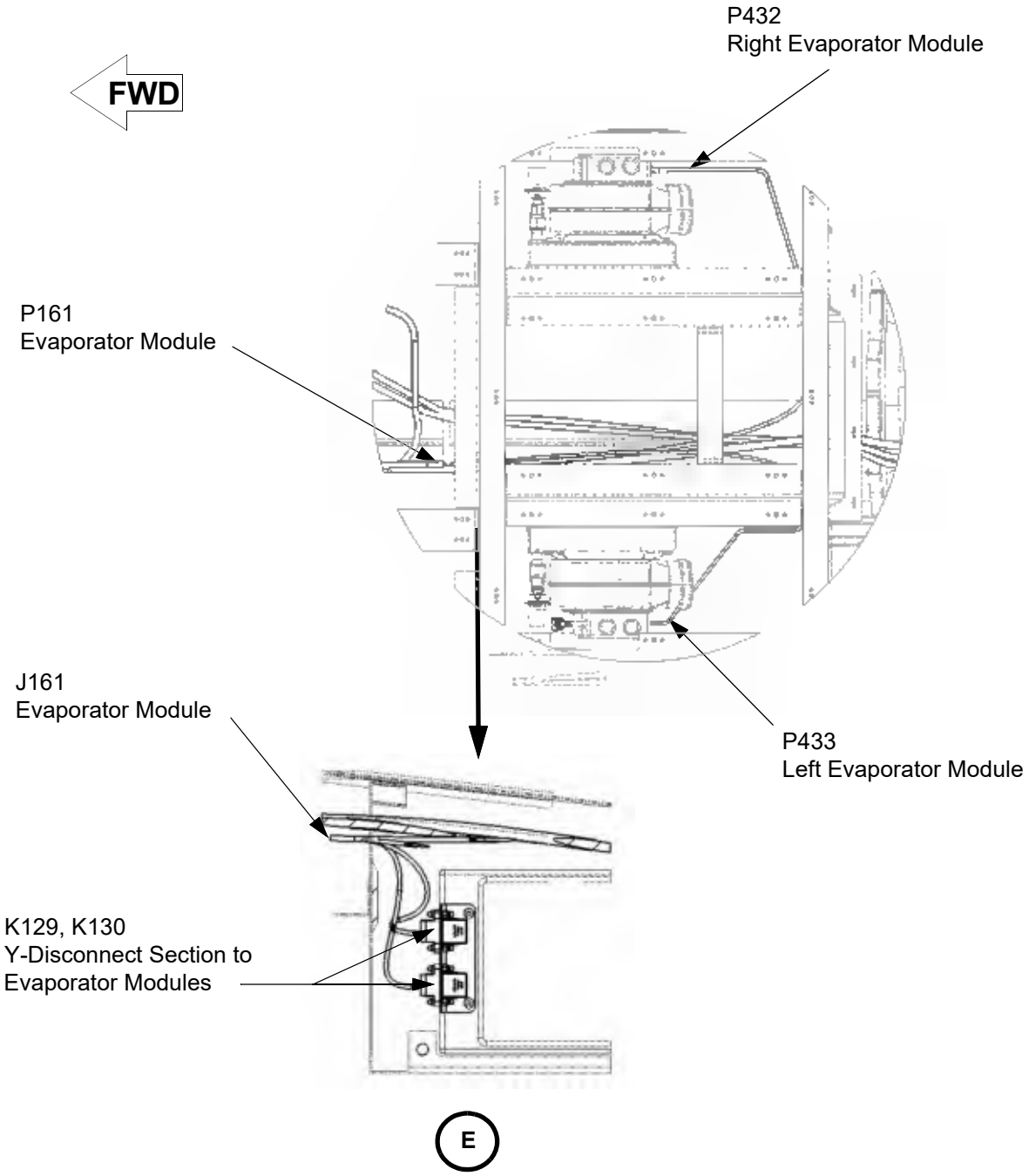

Figure 52-8.3: Main Cabin Electrical Harness (Sheet 7 of 9)

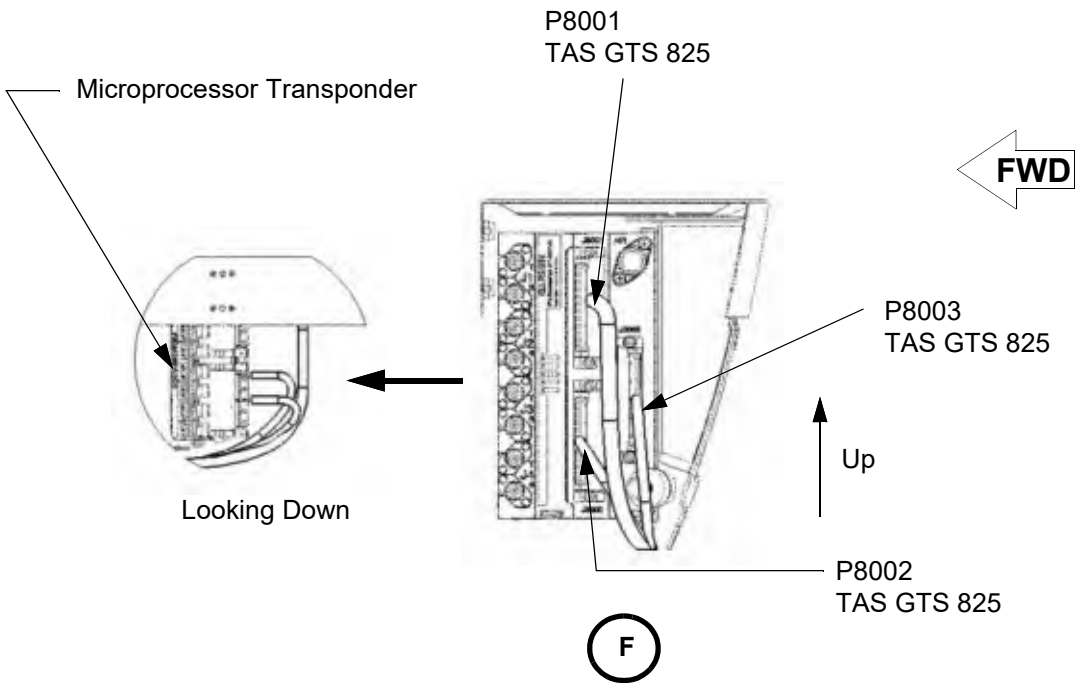

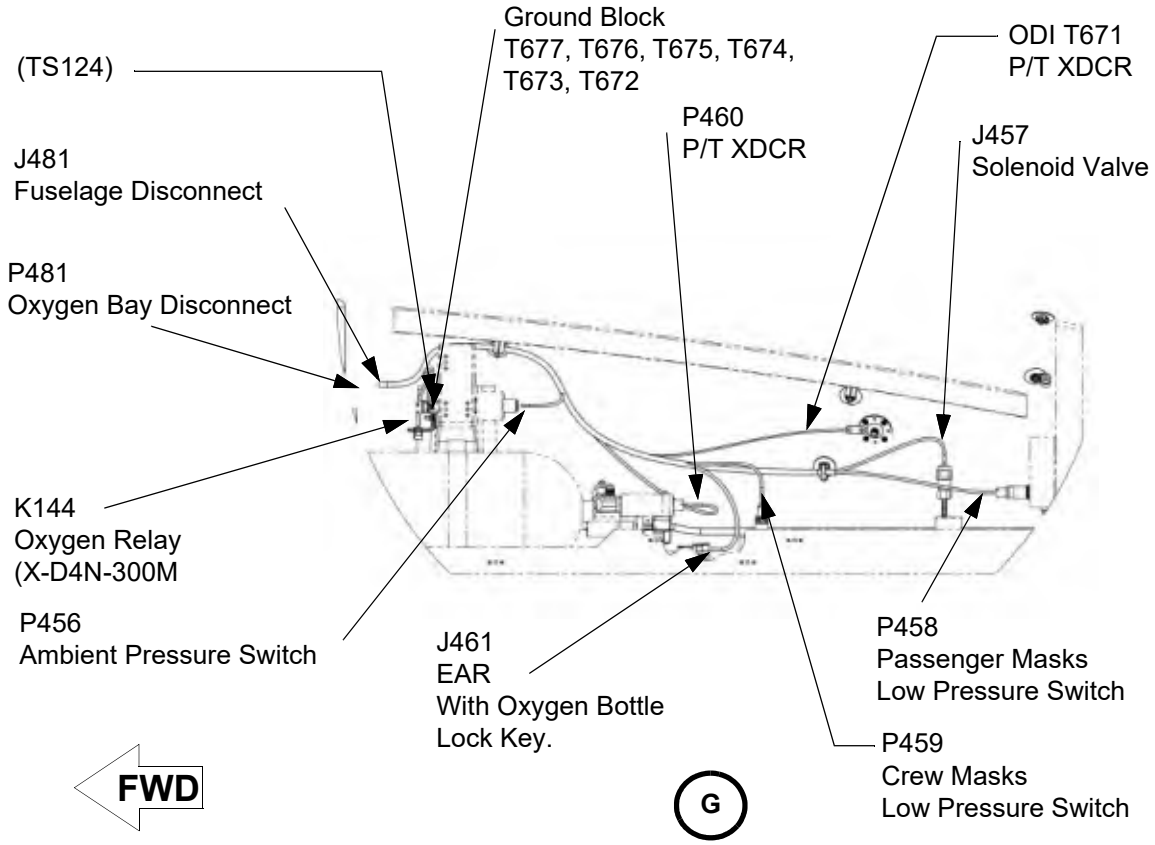

Figure 52-8.3: Main Cabin Electrical Harness (Sheet 8 of 9)

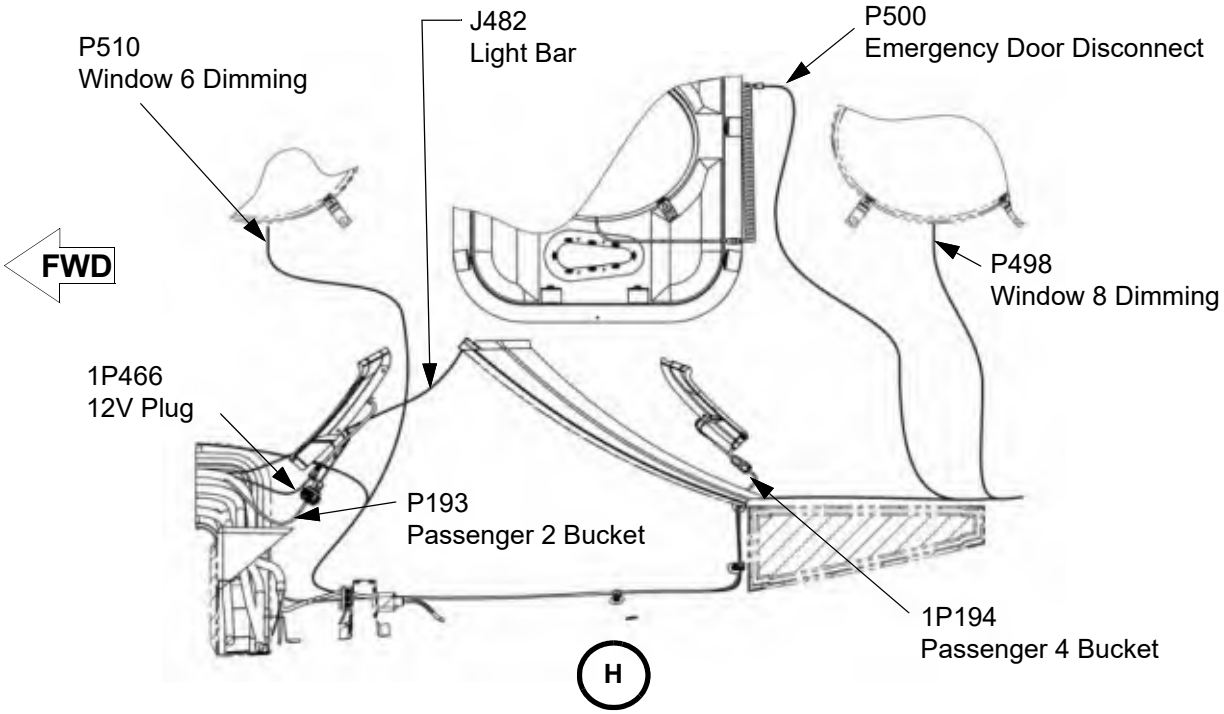

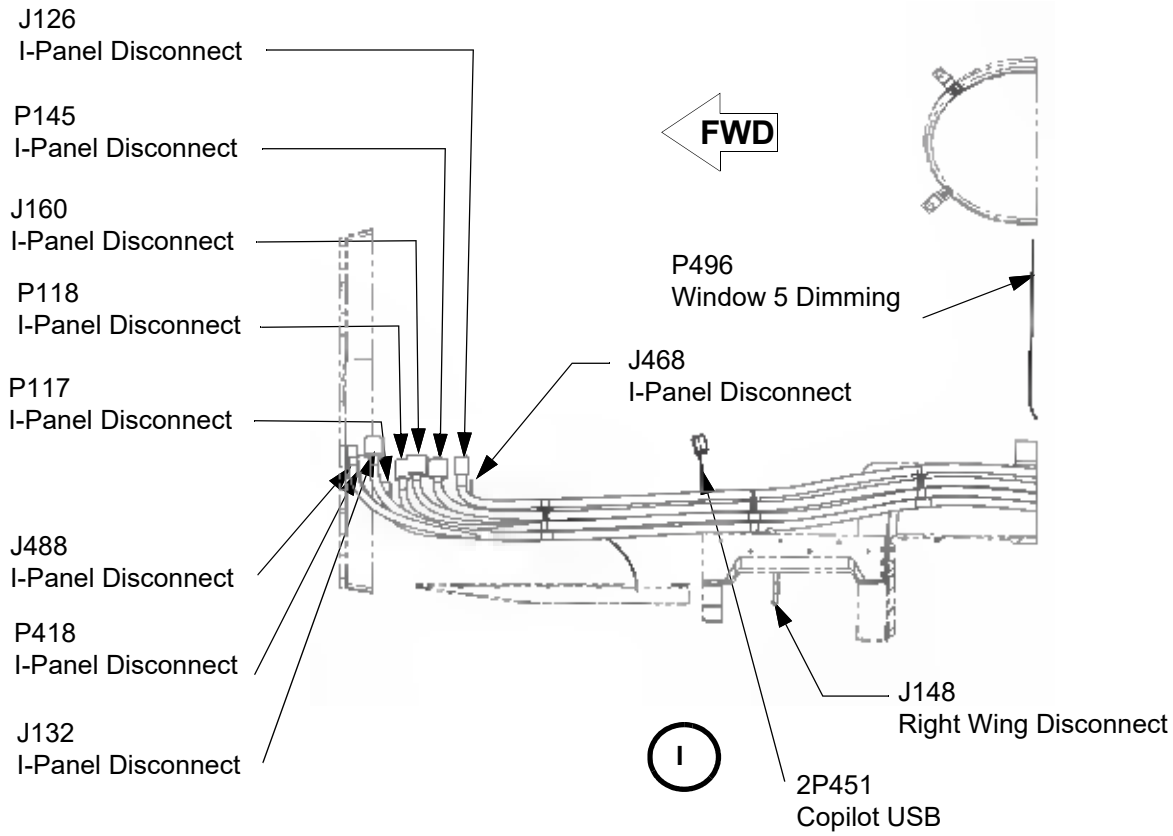

Figure 52-8.3: Main Cabin Electrical Harness (Sheet 9 of 9)

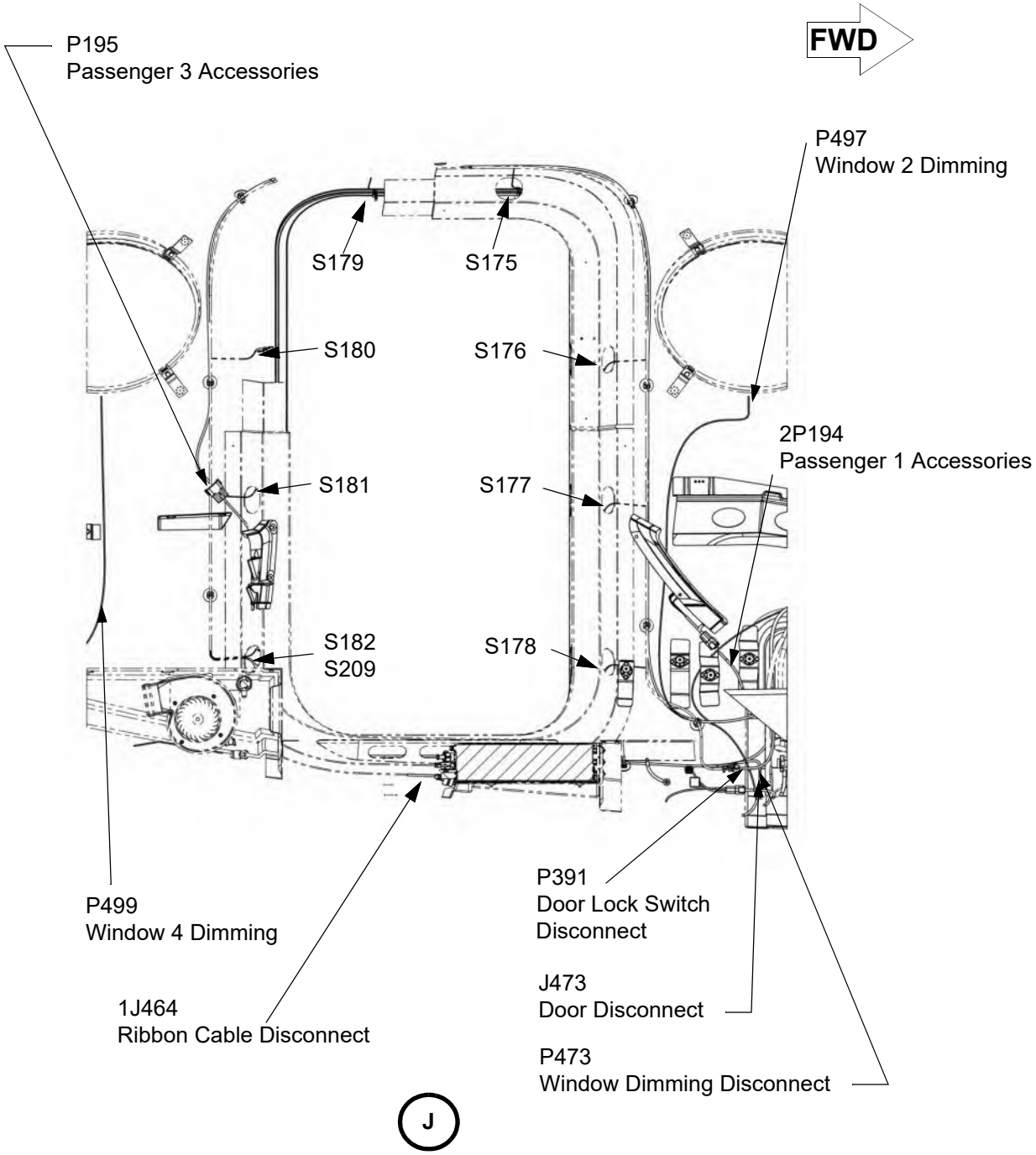

C. Electrical Harness Aft of the Pressure Bulkhead

(1) Removal

(a) Set the BATT 1 and BATT 2 switches to OFF.

(b) Disconnect external electrical power from the airplane (refer to Chapter 24-40).

(c) Remove the cowling (refer to Chapter 71-10).

(d) Disconnect the batteries by disconnecting the negative battery cables first then the positive battery cables.

WARNING: To reduce the possibility of personal injury and equipment damage, disconnect the negative battery cable before disconnecting the positive battery cable.

(e) Insulate the battery terminals.

(f) Remove the pressure bulkhead access panel (refer to Chapter 21-30).

(g) Remove access panels 1RE, 2RE, 1RTT, 1LE, 2LE, 3LE, and 4LE (Refer to Chapter 6) as applicable.

(h) Disconnect the equipment and components connected to the wiring harness to be removed.

(i) Tag the connectors.

(j) Cut and remove cable ties.

(k) Remove clamps.

(l) Disconnect the wiring harness pressure bulkhead connector and the coax disconnect, as applicable.

(m) Remove the electrical harness from the airplane.

(2) Installation

(a) Make connections to the tagged connectors.

(b) Attach the harness using cable ties and clamps.

(c) Connect the harness to the pressure bulkhead connector and the coax disconnect, as applicable.

(d) Connect the batteries starting with the positive battery cables then the negative cables.

WARNING: To reduce the possibility of personal injury and equipment damage, connect the positive battery cable before connecting the negative battery cable.

(e) Do an operational check of the cockpit instrumentation.

(f) Install access panels 1RE, 2RE, 1RTT, 1LE, 2LE, 3LE, and 4LE as applicable (refer to Chapter 6).

(g) Install the pressure bulkhead access panel (refer to Chapter 21-30).

(h) Install the cowling (refer to Chapter 71-10).

Figure 53-80.4: Electric Harnesses Aft of the Pressure Bulkhead (Sheet 1 of 7)

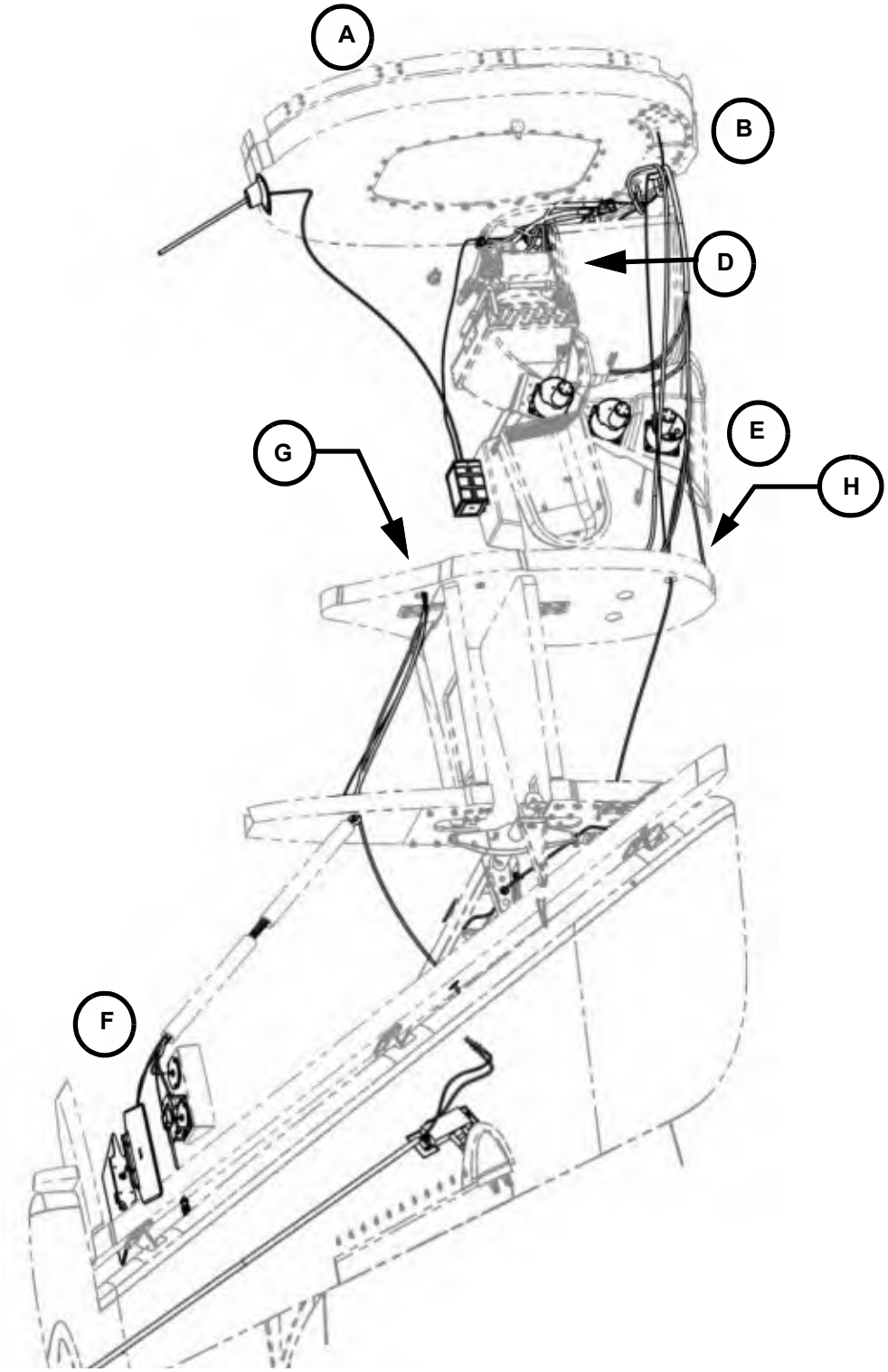

Figure 53-80.3: Electrical Harnesses Aft of the Pressure Bulkhead (Sheet 2 of 7)

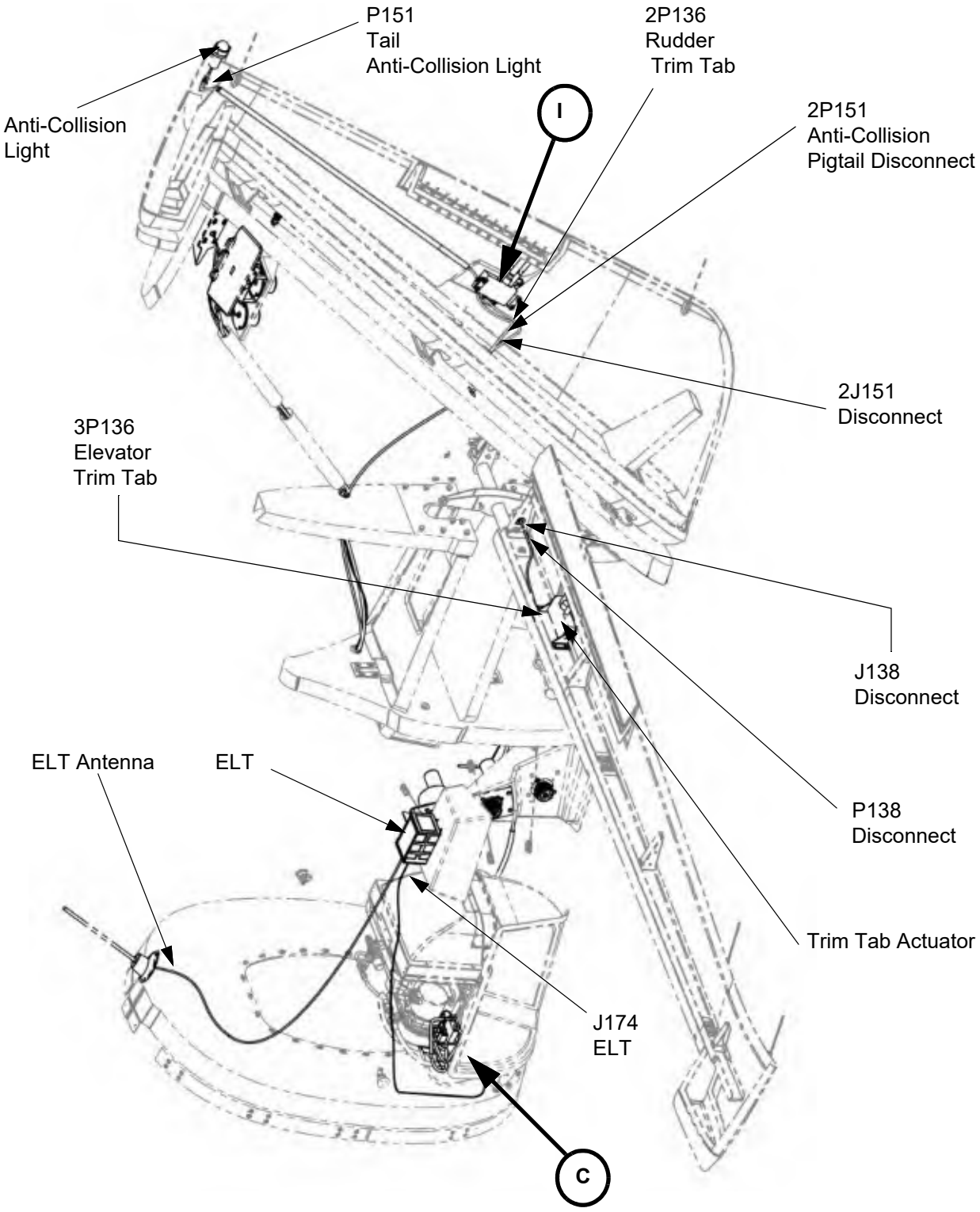

Figure 53-80.3: Electrical Harnesses Aft of the Pressure Bulkhead (Sheet 3 of 7)

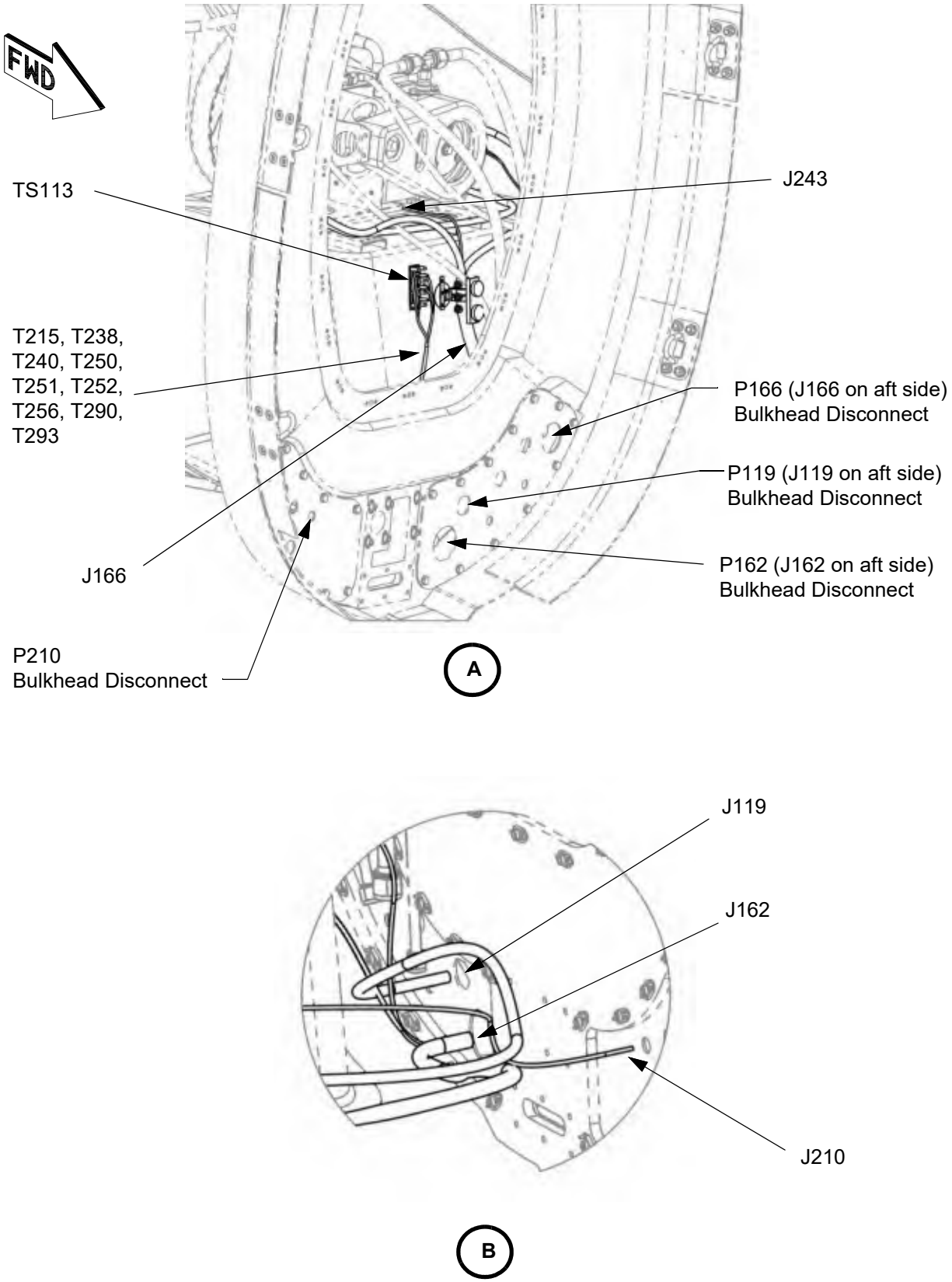

Figure 53-80.3: Electrical Harnesses Aft of the Pressure Bulkhead (Sheet 4 of 7)

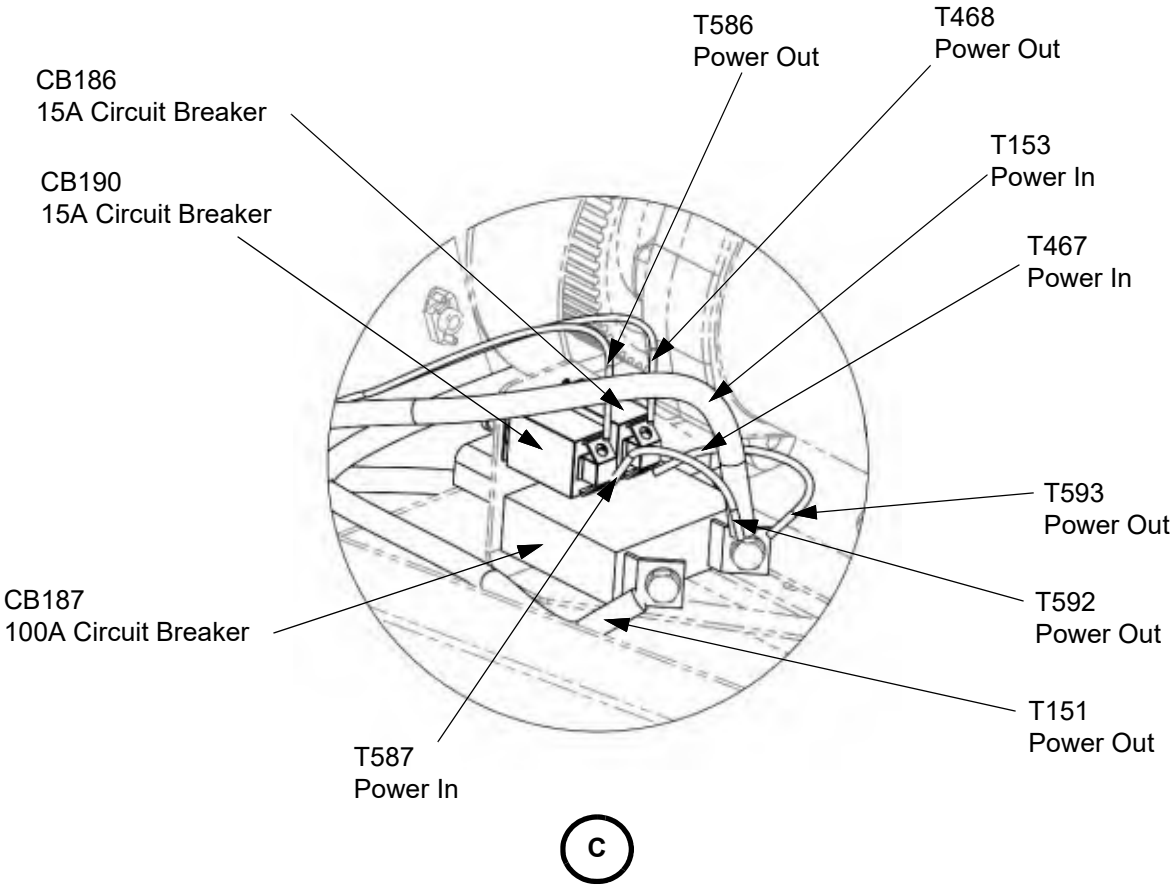

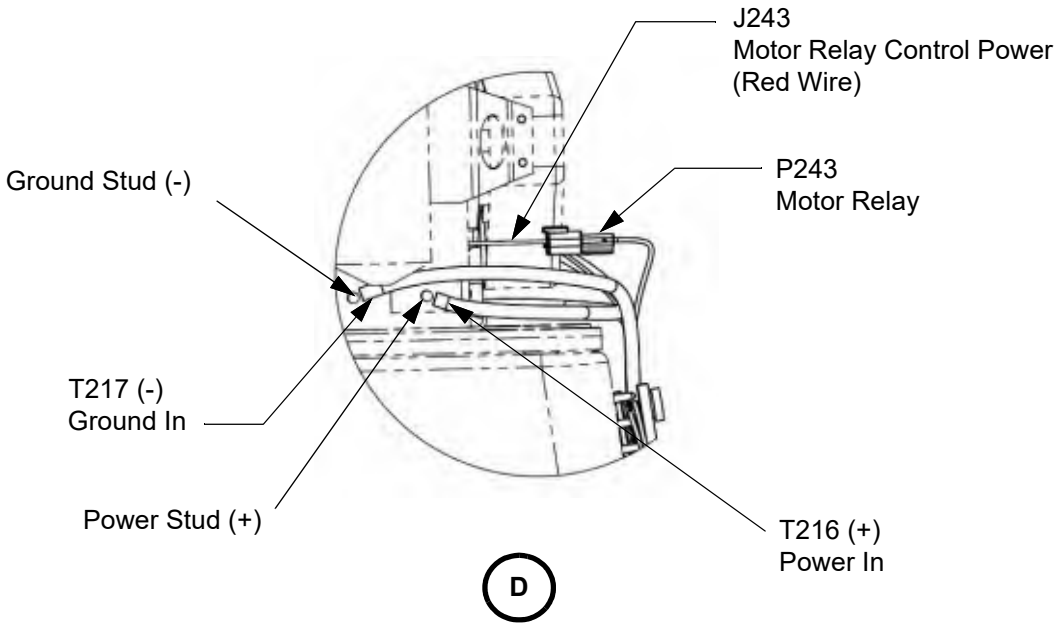

Figure 53-80.3: Electrical Harnesses Aft of the Pressure Bulkhead (Sheet 5 of 7)

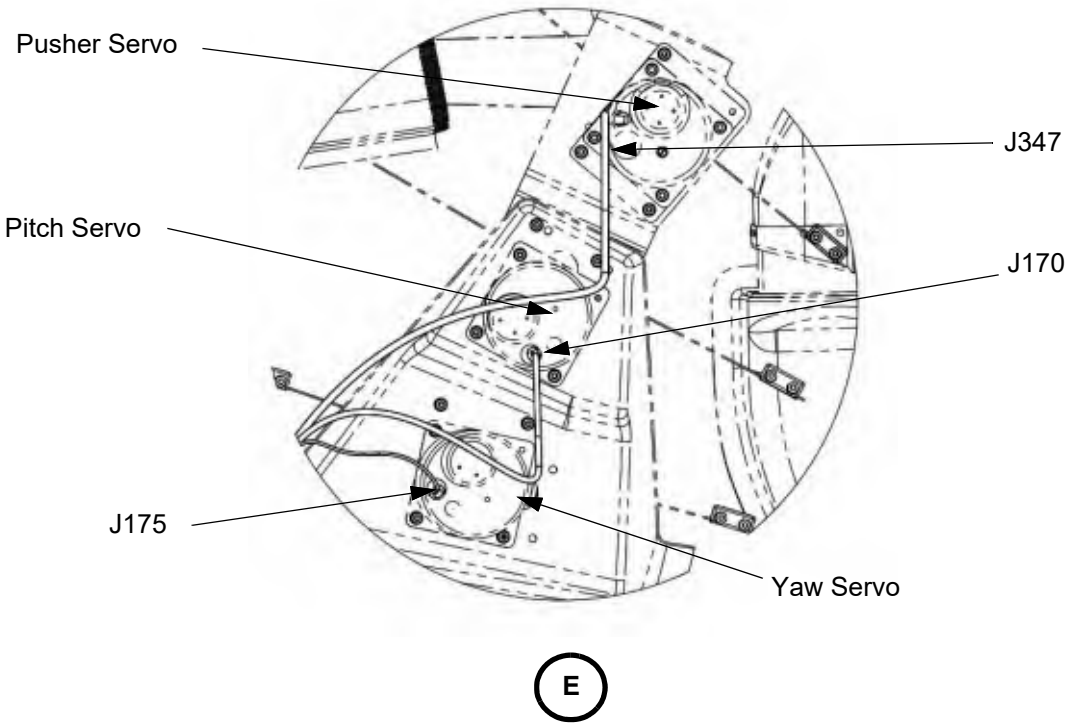

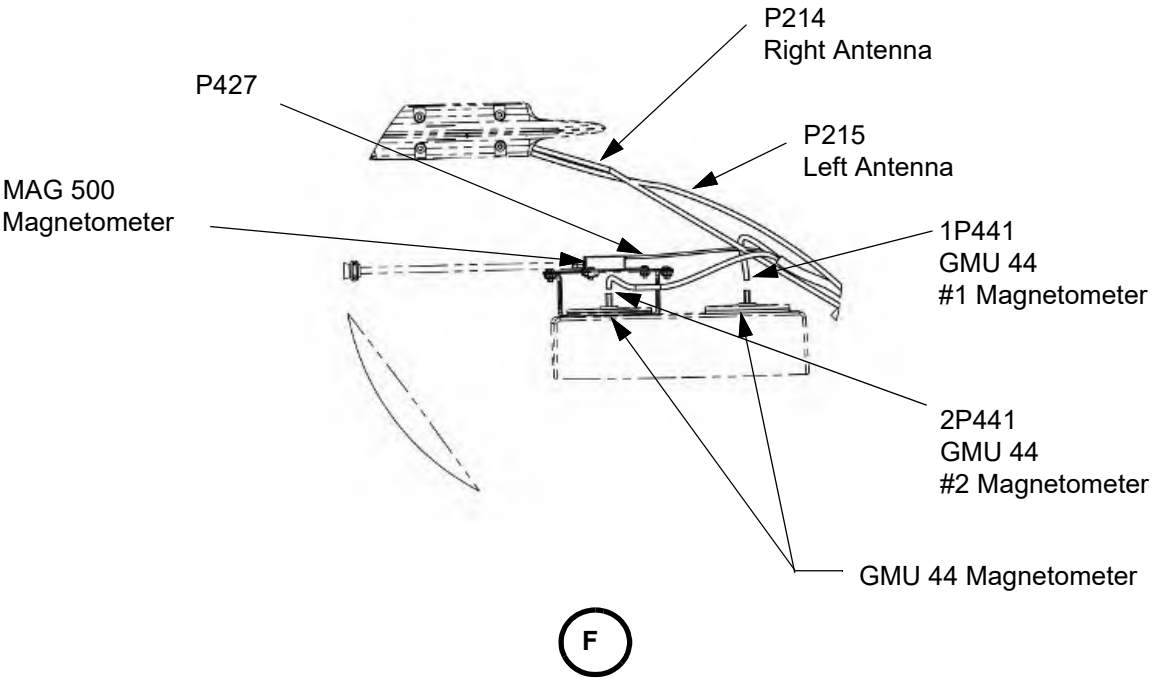

Figure 53-80.3: Electrical Harnesses Aft of the Pressure Bulkhead (Sheet 6 of 7)

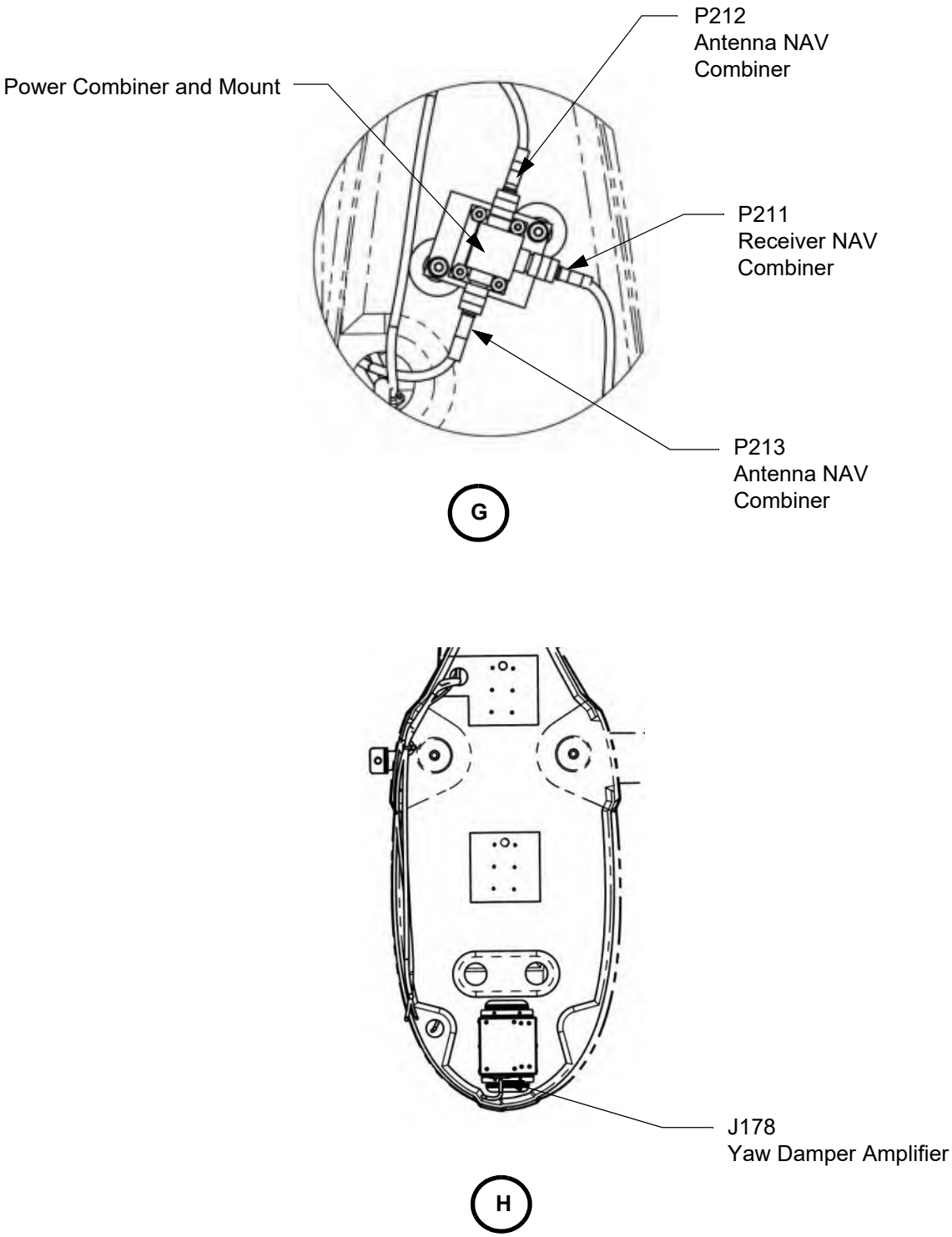

Figure 53-80.3: Electrical Harnesses Aft of the Pressure Bulkhead (Sheet 7 of 7)

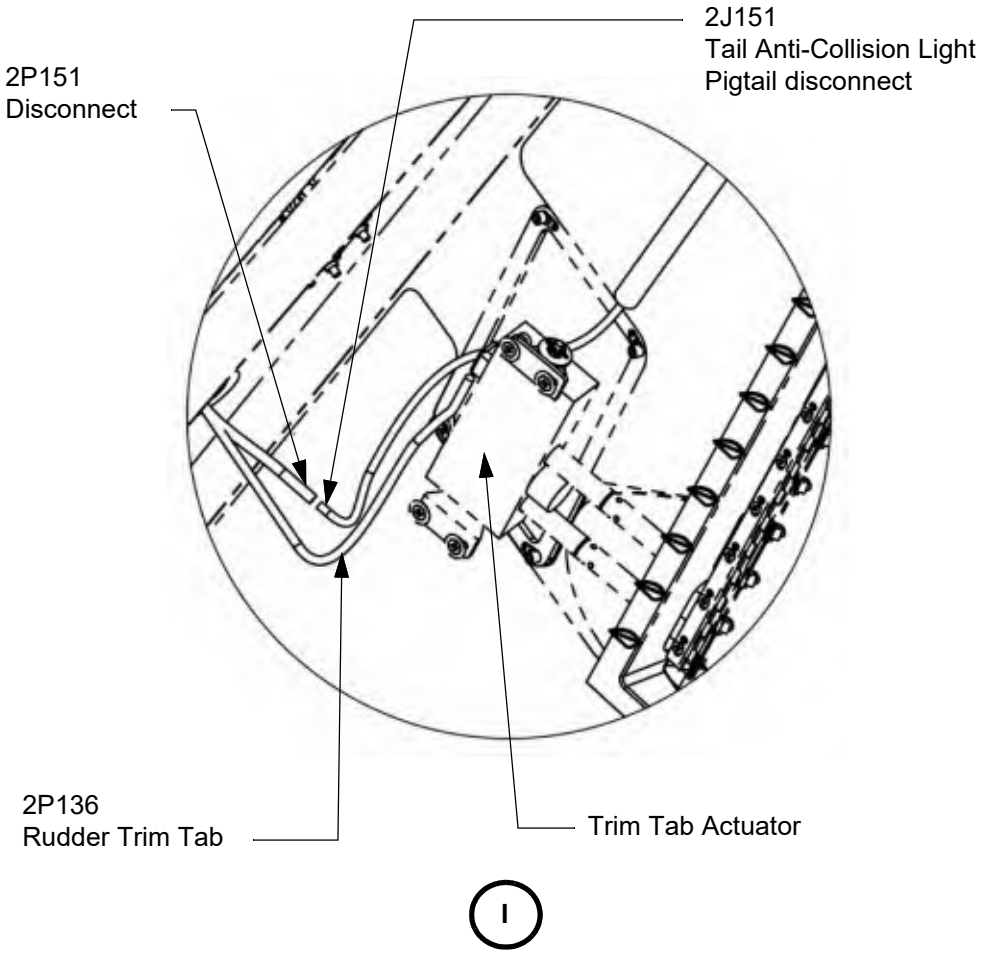

CHAPTER 55

Stabilizers

This Page Intentionally Left Blank

List of Effective Pages

Chapter/Section	Page Number	Effective Date
55-Title	Page 1	02 Jan 2020
55-Title	Page 2	02 Jan 2020
55-LOEP	Page 1	08 Sep 2026
55-LOEP	Page 2	02 Jan 2020
55-TOC	Page 1	02 Jan 2020
55-TOC	Page 2	02 Jan 2020
55-00	Page 1	13 Apr 2020
55-00	Page 2	02 Jan 2020
55-10	Page 1	12 Nov 2025
55-10	Page 2	02 Jan 2020
55-10	Page 3	02 Jan 2020
55-10	Page 4	02 Jan 2020
55-20	Page 1	02 Jan 2020
55-20	Page 2	02 Jan 2020
55-20	Page 3	02 Jan 2020
55-20	Page 4	02 Jan 2020
55-20	Page 5	08 Sep 2026
55-20	Page 6	08 Sep 2026
55-40	Page 1	16 May 2022
55-40	Page 2	16 May 2022
55-40	Page 3	02 Jan 2020
55-40	Page 4	02 Jan 2020
55-40	Page 5	16 May 2022
55-40	Page 6	08 Sep 2026
55-40	Page 7	02 Jan 2020
55-40	Page 8	02 Jan 2020

This Page Intentionally Left Blank

CHAPTER 55

Table of Contents

List of Effective Pages ..... 55-LOEP / Page 1
Table of Contents ..... 55-TOC / Page1

Paragraph **Page Number**

Stabilizers

1. General ..... 55-00 / Page 1
2. Tools ..... 55-00 / Page 1

Horizontal Stabilizer

1. Description ..... 55-10 / Page 1
2. Maintenance Practices ..... 55-10 / Page 1
   A. Horizontal Stabilizer Attachment Bolts Inspection - Every 2,000 Hours ..... 55-10 / Page 1
   B. Horizontal Stabilizer Attachment Bolts Replacement - Every 22,000 Hours ..... 55-10 / Page 1
   C. Hinges ..... 55-10 / Page 3
   D. Hinge Bearings ..... 55-10 / Page 3

Elevator

1. Description ..... 55-20 / Page 1
2. Maintenance Practices ..... 55-20 / Page 1
   A. Elevator ..... 55-20 / Page 1
   B. Balancing ..... 55-20 / Page 5

Rudder

1. Description ..... 55-40 / Page 1
2. Maintenance Practices ..... 55-40 / Page 1
   A. Rudder ..... 55-40 / Page 1
   B. Hinges ..... 55-40 / Page 3
   C. Hinge Bearings ..... 55-40 / Page 3
   D. Balancing ..... 55-40 / Page 5

This Page Intentionally Left Blank

STABILIZERS

1. General

The airplane empennage is a vertical stabilizer that is an integral part of the fuselage, a horizontal stabilizer that is removable for service and maintenance, a two piece elevator, and a rudder. All of these structures are an assembly of carbon fiber skins bonded to carbon fiber spars and ribs.

The elevator is attached to the horizontal stabilizer using hinges and to the rudder using a control horn moved by a cable, pulley and pushrod system.

The rudder is attached to the vertical stabilizer aft spar using hinges and is controlled using a cable, pulley, and pushrod system.

2. Tools

Table 55-00.1: Special tools

Item	Part Number	Supplier
Knife Edge or Bench	-	Any
Smart Level	-	Any
Scale accurate to ± 0.1 ounce	-	Any

This Page Intentionally Left Blank

HORIZONTAL STABILIZER

1. Description

The horizontal stabilizer is a symmetrical, fixed airfoil attached to the rear of the fuselage to provide stability in pitch.

The horizontal stabilizer is a carbon fiber structure made of two structural skins bonded to 12 ribs and 2 spars. The horizontal stabilizer is attached to the empennage using four bolts, washers, and nuts.

2. Maintenance Practices

A. Horizontal Stabilizer Attachment Bolts Inspection - Every 2,000 Hours

(1) Remove access panels 1RE, 1LE, and 3LE (refer to Chapter 6-00).
(2) Visually inspect the bolts, washers, and castellated nuts for signs of motion or corrosion and verify correct torque. Do not loosen or remove the bolts unless removal is required.
(3) Install access panels 1RE, 1LE, and 3LE (refer to Figure 6-00.5.).

B. Horizontal Stabilizer Attachment Bolts Replacement - Every 22,000 Hours

Note: Replace one pin at a time. The order of replacement is unimportant.

(1) Remove the rudder (refer to Chapter 55-40.2.A.).
(2) Remove the elevator (refer to Chapter 55-20.2.A).
(3) Remove access panels 1RE, 1LE, and 3LE (refer to Chapter 6-00).
(4) Support the horizontal stabilizer using jack stands or sawhorses able to support a minimum of 1000 lbs total weight. Use locally fabricated cradles shaped to the contour of the horizontal stabilizer to help support the load without damaging the horizontal stabilizer.
(5) Remove the attachment bolt, washers, and locknut.

Note: It may be necessary to loosen the other bolts to provide adequate play for removal and replacement of the bolts.

(6) Lubricate the bolt using Cor-Ban 27L corrosion inhibiting compound manufactured by Zip Chem Products, 400 Jarvis Dr., Morgan Hill, CA 95037, or approved equal.
(7) Install the bolt using new washers, and locknut.
(8) Repeat the above steps for the remaining horizontal attachment bolts.
(9) Remove the jack stands or sawhorses.
(10) Install the elevator (refer to Chapter 55-20.2.B.).
(11) Install the rudder (refer to Chapter 55-40.2.B.).

(12) Install access panels 1RE, 1LE, and 3LE (refer to Chapter 6-00).

Figure 55-10.1: Horizontal Stabilizer

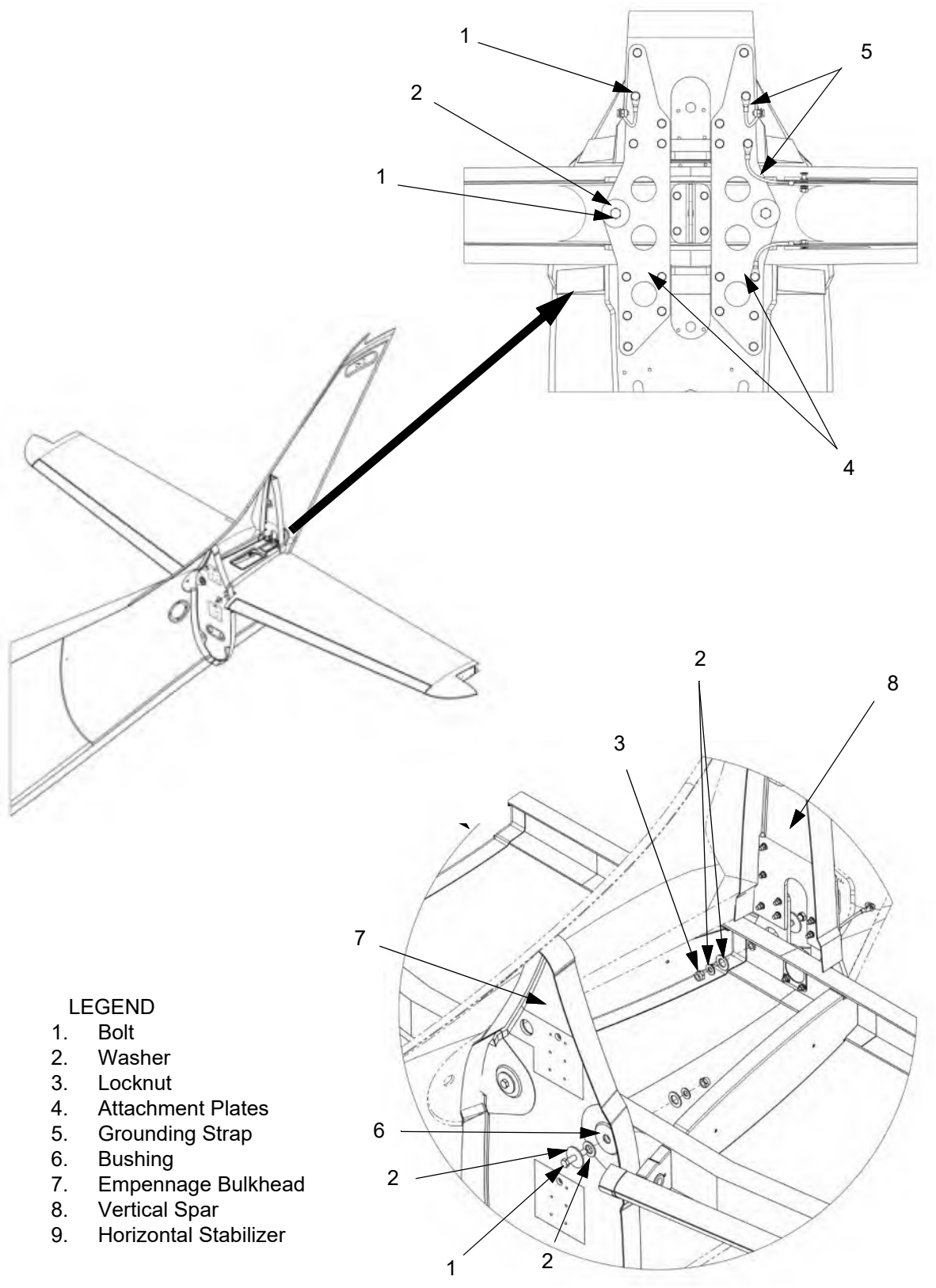

LEGEND
1. Bolt
2. Washer
3. Locknut
4. Attachment Plates
5. Grounding Strap
6. Bushing
7. Empennage Bulkhead
8. Vertical Spar
9. Horizontal Stabilizer

C. Hinges

(1) Removal

(a) Remove the elevator (refer to Chapter 55-20).

(b) Remove the four bolts and washers attaching the hinge to the horizontal stabilizer.

(c) Remove the hinge.

(2) Installation

(a) Hold the hinge in position.

(b) Attach it to the horizontal stabilizer using four bolts and washers.

(c) Install the elevator (refer to Chapter 55-20).

D. Hinge Bearings

(1) Removal

(a) Remove the hinge from the horizontal stabilizer.

(b) Heat the hinge and bearing using a heat gun to help break the bond of the Loctite™ 680 used to bond the bearing to the hinge.

WARNING: Only heat the hinge to the point where it is hot to the touch using bare hands. Do not heat to the point where temper or corrosion resistance of the hinge will be damaged.

(c) Push out the bearing.

(2) Installation

(a) Install the new bearing (refer to Chapter 51-40).

(b) Install the hinge onto the horizontal stabilizer.

Figure 55-10.2: Hinge

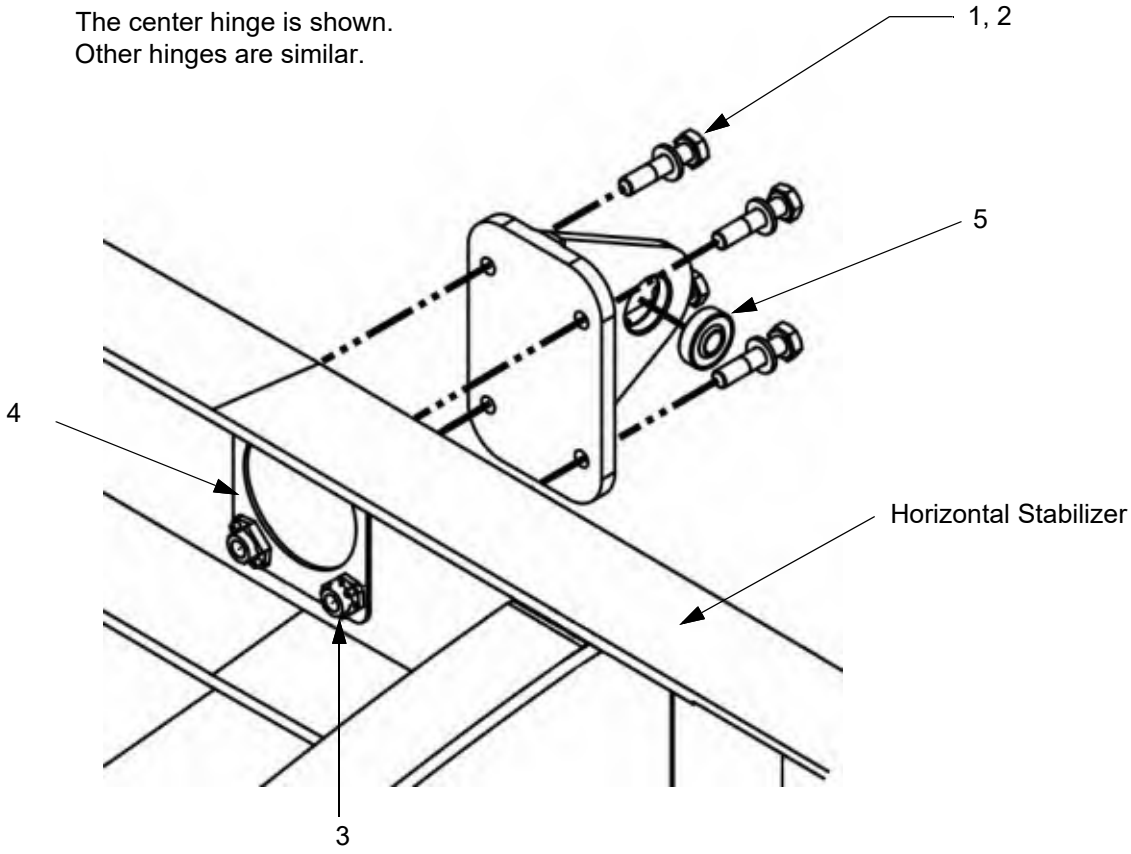

LEGEND
1. Bolt
2. Washer
3. Nutplate
4. Backing Plate
5. Bearing

E. Servicing and Maintenance

(1) The horizontal stabilizer does not require any service or maintenance. Visually inspect the horizontal stabilizer annually for any cracking, damage, delamination, or distortion. If damage is found, do a tap test (refer to Chapter 51-10) and contact Epic Aircraft, LLC.

(2) Verify correct installation and torque of the elevator mounting hardware.

This Page Intentionally Left Blank

ELEVATOR

1. Description

The pitch axis of the airplane is controlled by the elevator and elevator trim. The elevator is attached and pivots at five points on the aft end of the horizontal stabilizer and has a control horn at the middle pivot for control cable attachment. An elevator trim motor, hinge, trim surface, and trim indicator are the trim components in the elevator which are controlled from either yoke assembly.

The elevator is controlled using either of the yokes which are attached to a torque tube and cables. The torque tubes transfer movement aft using cables and pulleys.

Both halves of the elevator assembly are made of composite skins, spars, and ribs attached at the center by a control horn and pivot.

2. Maintenance Practices

A. Elevator

(1) Removal

(a) Set the BATT 1 and BATT 2 switches to OFF.

(b) Pull the ELEV TRIM circuit breaker.

(c) Disconnect external electrical power from the airplane (refer to Chapter 24-40).

(d) Remove the crew carpet (refer to Chapter 25-10).

(e) Remove access panels 3LC, 1LE, and 1RE (refer to Chapter 6).

(f) Loosen the tension in the cables using the turnbuckles.

Note: The turnbuckle does not need to be completely disconnected. It only needs to be loosened to give slack for disconnection of the rod ends from the control horn.

(g) Disconnect the grounding straps from the elevator.

(h) Disconnect the upper and lower control cables from the elevator control horn.

(i) Remove the upper and lower elevator travel stop attachment nuts, washers, and bolts.

(j) Rotate the elevator assembly upward to access the two hinge mate attachment bolts for the **left** half of the elevator then remove the bolts, castellated nuts, and washers.

(k) Slowly disengage the elevator hinges from the hinges on the horizontal then rotate the elevator half away from the airplane.

Note: This disengages the bearing in the left half of the elevator horn from the pin in the right half of the elevator horn seated through the center hinge permitting removal of the elevator half from the airplane.

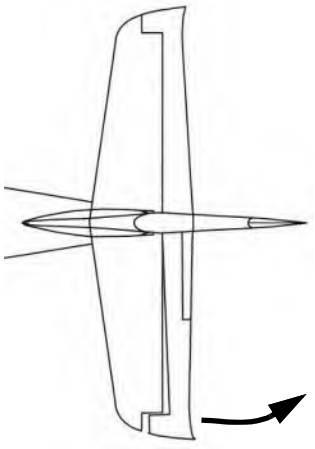

(l) Carefully move the elevator aft then remove the adel clamps holding the trim motor wiring on the aft spar of the horizontal stabilizer. Note orientation of the connection for re-installation.

(m) Disconnect the trim electrical connectors.

(n) Remove the left elevator half from the airplane.

(o) Rotate the **right** half of the elevator upward to access the two hinge mate attachment bolts for the left half of the elevator then remove the bolts, nuts, and washers.

(p) Remove the right elevator half from the airplane.

(2) Installation

(a) Verify the elevator cables have been loosened at the turnbuckles before installing the elevators.

(b) Insert the pin in the right half of the elevator horn into the center hinge.

(c) Hold the right half of the elevator near the attachment hinges on the horizontal stabilizer then rotate the trailing edge upward to access the mating hinge surfaces.

(d) Install the elevator half using bolts, washers, castellated nuts, and cotter pins.

(e) Install the upper and lower travel stops onto the mounting bushings on the right half of the elevator horn.

(f) Attach the right side grounding strap.

Note: The left and right elevators must be mounted on the horizontal stabilizer before assembling the elevator horn.

(g) Hold the left elevator near the attachment hinges on the horizontal stabilizer.

(h) Connect the elevator trim wiring and supporting adel clamps in the same orientation from which they were removed.

(i) Carefully rotate the bearing in the left half of the elevator horn onto the pin in the right half that has been inserted through the center hinge.

(j) Install the elevator using bolts, washers, castellated nuts, and cotter pins.

(k) Attach the left side grounding strap.

(l) Connect the elevator trim wiring harness.

(m) Mate the left and right elevator horn arms then install the bolts, washers, and nuts through the elevator travel stops. Bolts enter from the left side.

(n) Install the upper and lower elevator control cables to the elevator horn using bolts, washers, castellated nuts, and cotter pins

(o) Adjust the cable tensions and rigging (refer to Section 27-30).

(p) Install the turnbuckle safety clips.

(q) Set the elevator to the neutral position then verify the up and down deflection.

(r) Adjust the elevator deflections then using the bolts in the travel stops then safety wire the bolts and nuts (refer to Section 27-30).

(s) Install access panels 3LC, 1LE, and 1RE (refer to Chapter 6) then install the crew carpet (refer to Chapter 25-10).

(t) Set the ELEV TRIM circuit breaker.

(3) Inspection

(a) Verify correct installation and torque of the elevator mounting hardware.

(b) Verify cotter pins and safety wire have been correctly installed on all hardware.

(c) Inspect the elevator skin for defects or irregularities.

(d) Verify operation of the elevator. Ensure the rudder moves freely and without unusual resistance.

Figure 55-20.1: Elevator Installation (Sheet 1 of 2)

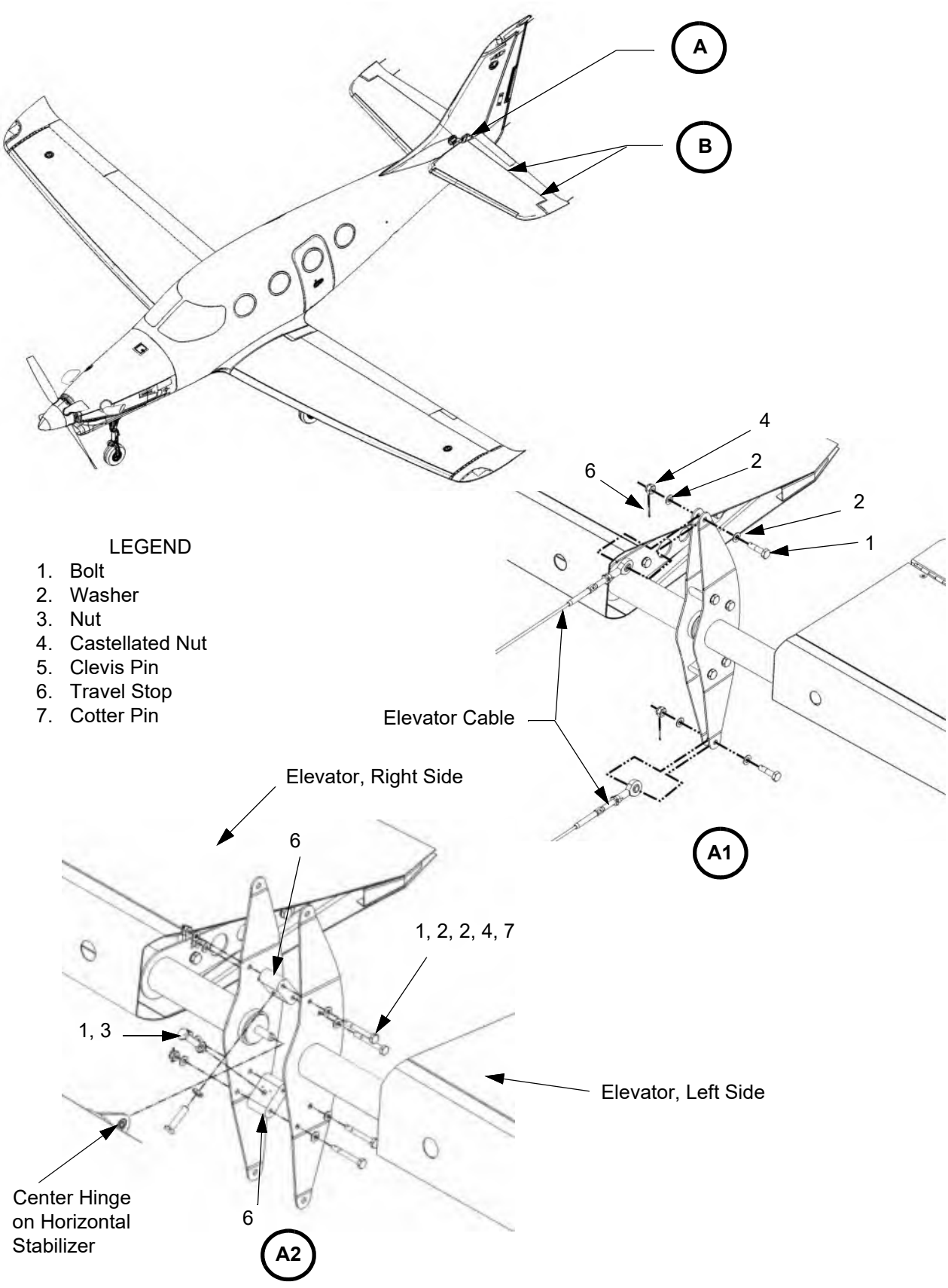

Figure 55-20.1: Elevator Installation (Sheet 2 of 2)

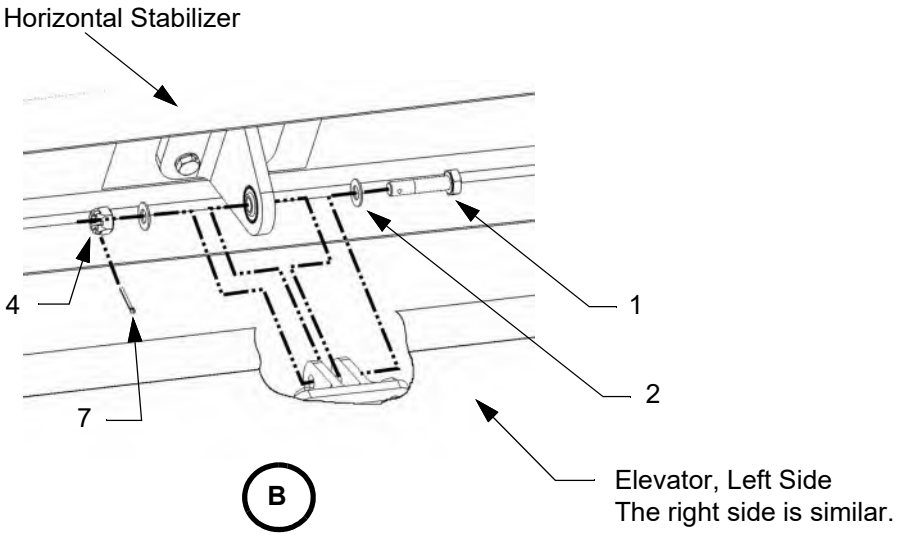

B. Balancing

Elevator balance must be checked whenever the elevator is repaired, altered, or repainted. If weight must be added or removed from the elevator contact Epic Aircraft, LLC for instructions.

Note: When balancing the elevator, the elevator assembly must be complete including, but not limited to, mounting brackets, all attachment hardware, trim tab, access panels, grounding strap, paint, and static wicks.

Note: Ensure there is no air movement in the room where balancing will be done that can deflect the elevator from its balanced condition.

(1) Remove the elevator assembly from the airplane.

(2) Re-assemble the elevator assembly ensuring that all hardware, travel stops, servos, rods, tab, static wicks, clevis and cotter pins are installed.

(3) Weigh the elevator assembly. The weight must be between 52.2 to 58.5 lbs (23.7 to 33.1 kg), inclusive.

(4) Use either knife edges or hinges attached to the side of a bench to support the elevator during balancing.

(5) Ensure the knife edges or hinges are level and parallel along the length of the elevator.

(6) Attach the elevator to the hinges using bolts or insert bolts through the elevator hinges then balance them on the knife edges, as applicable.

(7) Measure the force required at the Weigh Point to hold the elevator level. The measured force must be between 0.74 to 4.7 ounces (20.98 to 133.2 grams), inclusive.

Note: The negative value represents an over-balanced control surface, forward edge heavy.

(8) Refer to Chapter 27-30 for proper re-installation or the elevator and rigging of the elevator control system.

Figure 55-20.2: Elevator Balance

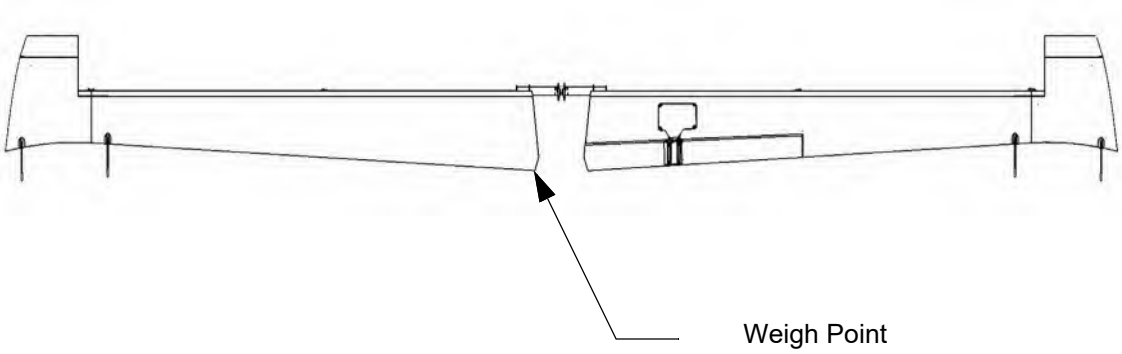

RUDDER

1. Description

The yaw axis of the airplane is controlled by the rudder and rudder trim. The rudder is attached and pivots at three points on the aft end of the vertical stabilizer and has a rudder horn at the lower pivot for control cable attachment. An integral rudder trim motor, hinge, trim surface, and trim indicator are the trim components which are controlled from either yoke assembly.

The rudder is controlled using rudder pedals attached to linkage, control rods, torque tubes, and cables. The torque tubes transfer movement aft using cables and pulleys.

2. Maintenance Practices

A. Rudder

(1) Removal

(a) Set the BATT 1 and BATT 2 switches to the “OFF” position.

(b) Ensure the STROBE and NAV switches are in the “OFF” position.

(c) Pull the RUD TRIM, NAV LIGHTS, and STROBE LIGHTS circuit breakers.

(d) Removal all external electrical power to the airplane (refer to Chapter 24-40).

(e) Remove the copilot’s floor panel to access the rudder cable turnbuckles.

(f) Remove the left and right rudder cable turnbuckle safety clips then loosen the turnbuckles until there is no tension in the cables.

(g) Remove the bolts, washers, and castellated nuts attaching the rudder cables to the rudder horn.

(h) Remove the right side empennage access panel that is inboard and aft of the horizontal stabilizer.

(i) Disconnect the rudder trim wire bundle.

(j) Turn the nose wheel to the left using a tow bar. Do not exceed the contact stops on the nose trunnion assembly.

(k) Move the rudder to the full left position.

(l) Hold the rudder then remove all the attachment bolts, nuts, and washers.

Note: Ensure an adequate number of personnel and ladders are used to safely hold the rudder during installation.

(m) Carefully move the rudder aft to access and disconnect the tail position light electrical connection.

(n) Remove the clamps that hold the trim motor electrical connection. Note orientation of the connection for re-installation.

(o) Remove the rudder from the airplane.

(2) Installation

(a) Hold the rudder near its installed position.

Note: Ensure an adequate number of personnel and ladders are used to safely hold the rudder during installation.

(b) Connect the rudder trim electrical connection then install the adel clamps.

(c) Connect the tail position light electrical connection.

(d) Attach the rudder to the vertical stabilizer using bolts, washers, and castellated nuts.

(e) Using a tow bar, rotate the nose wheel to gain access to the rudder horn. Do not exceed the contact stops on the nose gear trunnion.

(f) Attach the rudder cable rod ends to the horn using bolts, castellated nuts, and washers.

CAUTION: Do not twist, unravel, or swap the rudder control cables when attaching them to the rudder control arm.

(g) Adjust the cable tensions and rigging (refer to Chapter 27-20).

(h) Install the turnbuckle safety clips.

(i) Install the access panels.

(j) Reset the RUD TRIM, NAV LIGHTS, and STROBE LIGHTS circuit breakers.

(3) Inspection

(a) Verify correct installation and torque of the rudder mounting hardware.

(b) Verify condition and connection of the ground straps.

(c) Verify cotter pins and safety wire have been correctly installed on all hardware.

(d) Inspect the rudder skin for defects or irregularities.

(e) Verify operation of the rudder. Ensure the rudder moves freely and without unusual resistance.

B. Hinges

(1) Removal

(a) Remove the rudder.

(b) Remove the four bolts and washers attaching the hinge to the vertical stabilizer. Disconnect the ground straps from the lower hinge. Note orientation of the ground strap terminal ends for re-installation.

(c) Remove the hinge.

(2) Installation

(a) Hold the hinge in position.

(b) Attach it to the vertical stabilizer using four bolts and washers. Re-attach the ground straps to the lower hinge.

C. Hinge Bearings

(1) Removal

(a) Remove the hinge from the vertical stabilizer.

(b) Heat the hinge and bearing using a heat gun to help break the bond of the Loctite™ 680 used to bond the bearing to the hinge.

WARNING: Only heat the hinge to the point where it is hot to the touch using bare hands. Do not heat to the point where temper or corrosion resistance of the hinge will be damaged.

(c) Push out the bearing.

(2) Installation

(a) Install the new bearing (refer to Chapter 51-40).

(b) Install the hinge onto the vertical stabilizer.

Figure 55-40.1: Rudder Installation

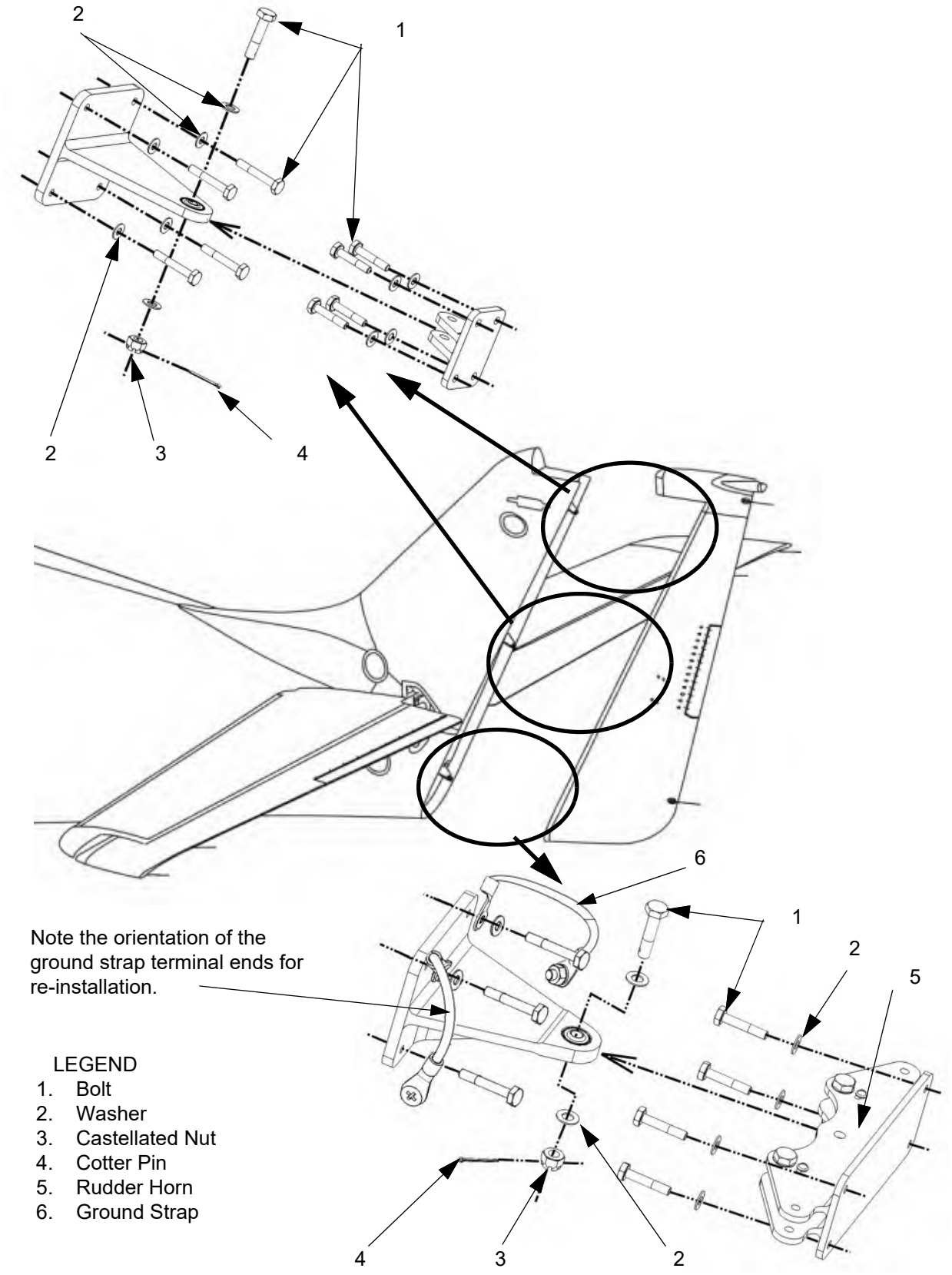

D. Balancing

Rudder balance must be checked whenever the rudder is repaired, altered, or repainted. If weight must be added or removed from the rudder contact Epic Aircraft, LLC for additional instructions before starting the work.

Note: The rudder assembly must be complete including, but not limited to, mounting brackets, all attachment hardware, trim tab, access panels, grounding strap, paint, light, and static wicks.

Note: Ensure there is no air movement in the room where balancing will be done that can deflect the rudder from its balanced condition.

Table 55-40.1: Special Tools

Item	Part Number	Supplier
Knife Edge or Bench	-	Any
Propeller Protractor	-	Any
Scale accurate to ± 0.1 ounce	-	Any

(1) Remove the rudder from the airplane.
(2) Weigh the rudder assembly. The weight must be between 40 to 46 lbs (18.1 to 20.8 kg), inclusive.
(3) Use either knife edges or hinges attached to the side of a bench to support the rudder during balancing.
(4) Ensure the knife edges or hinges are level and parallel along the length of the rudder.

(5) Attach the rudder to the hinges using bolts or insert bolts through the rudder hinges then balance them on the knife edges, as applicable.

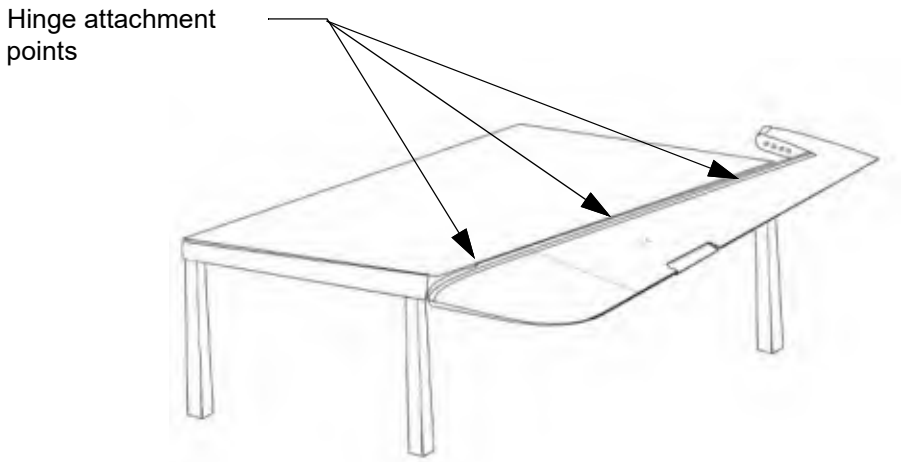

(6) Measure the force required at the Weigh Point to hold the rudder level. The measured force must be between 34.88 to 44.6 ounces (988.8 to 1264.4 grams), inclusive.

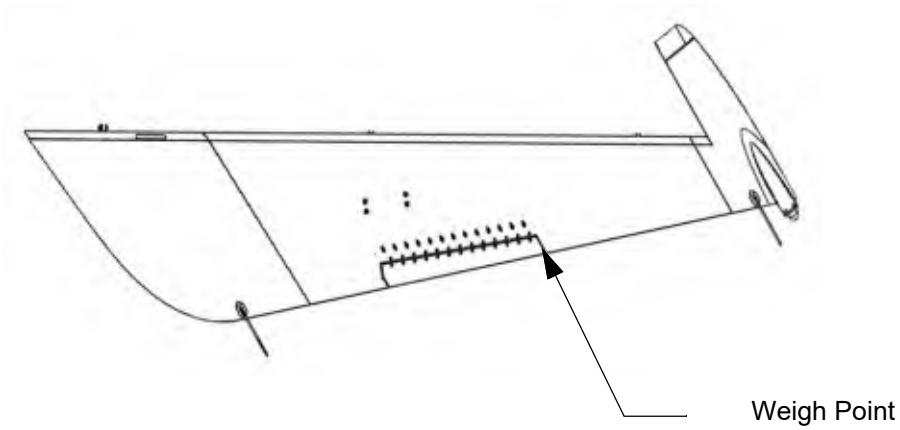

(7) If the rudder is trailing edge heavy use the following procedure.

(a) Drill into the space between the counterbalance weight and the closeout panel using a 1/2” drill bit.

(b) Put a cup on the rudder at the weigh point then add steel shot to the cup until the rudder is level.

(c) Weigh the shot and the cup.

(d) Make a mixture of flocked cotton fibers and resin then add steel shot to the mixture until the weight equals that measured in the step above.

(e) Pour the mixture into the previously drilled hole.

(f) Surface prep the counterweight rib.

(g) Apply a 2 BID carbon layup over the drilled hole.

(h) Cover the layup with peel ply.

(i) Let the resin fully cure (refer to the resin manufacturer's instructions).

(j) Remove the peel ply.

(8) If the rudder is trailing edge light use the following procedure.

(a) Use an auger bit and drill into the counterbalance. Remove only a small amount of the counterbalance at a time. Test the rudder balance after every removal of counterbalance material.

(b) When the rudder is balanced fill the drilled holes with a mixture of resin and flocked cotton fibers.

(c) Surface prep the counterweight rib.

(d) Apply a 2 BID carbon layup over the drilled hole.

(e) Cover the layup with peel ply.

(f) Let the resin fully cure (refer to the resin manufacturer's instructions).

(g) Remove the peel ply.

(9) Install the rudder.

(10) Test the operation of the rudder.

This Page Intentionally Left Blank

CHAPTER 56

Windows

This Page Intentionally Left Blank

List of Effective Pages

Chapter/Section	Page Number	Effective Date
56-Title	Page 1	02 Jan 2020
56-Title	Page 2	02 Jan 2020
56-LOEP	Page 1	10 Jul 2025
56-LOEP	Page 2	02 Jan 2020
56-TOC	Page 1	10 Jul 2025
56-TOC	Page 2	02 Jan 2020
56-00	Page 1	10 Jul 2025
56-00	Page 2	10 Jul 2025
56-10	Page 1	20 Oct 2023
56-10	Page 2	20 Oct 2023
56-10	Page 3	20 Oct 2023
56-10	Page 4	20 Oct 2023
56-10	Page 5	20 Oct 2023
56-10	Page 6	20 Oct 2023
56-20	Page 1	10 Jul 2025
56-20	Page 2	10 Jul 2025
56-20	Page 3	10 Jul 2025
56-20	Page 4	10 Jul 2025
56-20	Page 5	10 Jul 2025
56-20	Page 6	10 Jul 2025
56-20	Page 7	10 Jul 2025
56-20	Page 8	10 Jul 2025
56-20	Page 9	10 Jul 2025
56-20	Page 10	10 Jul 2025
56-20	Page 11	10 Jul 2025
56-20	Page 12	10 Jul 2025
56-20	Page 13	10 Jul 2025
56-20	Page 14	10 Jul 2025
56-20	Page 13	10 Jul 2025
56-20	Page 14	10 Jul 2025
56-30	Page 1	10 Jul 2025
56-30	Page 2	10 Jul 2025
56-30	Page 3	10 Jul 2025
56-30	Page 4	10 Jul 2025
56-30	Page 5	10 Jul 2025
56-30	Page 6	10 Jul 2025

This Page Intentionally Left Blank

CHAPTER 56

Table of Contents

List of Effective Pages ..... 56-LOEP / Page 1
Table of Contents ..... 56-TOC / Page1

Paragraph **Page Number**

Windows

1. General ..... 56-00 / Page 1
2. Tools ..... 56-00 / Page 2

Flight Compartment

1. Description ..... 56-10 / Page 1
2. Maintenance Practices ..... 56-10 / Page 1
   A. Windshield ..... 56-10 / Page 1
   B. Approved Repairs ..... 56-10 / Page 3
   C. Windshield Edge Seal ..... 56-10 / Page 6

Passenger Compartment

1. Description ..... 56-20 / Page 1
2. Maintenance Practices ..... 56-20 / Page 1
   A. Window ..... 56-20 / Page 1
   B. Window Seal Rings ..... 56-20 / Page 8
   C. Window Dimmer Pane (SN: K003 - K084, Optional K085 and On) ..... 56-20 / Page 10
   D. Window Dimmer Modules (SN: K003 - K084, Optional K085 and On) ..... 56-20 / Page 13
   E. Window Frost Pane (SN: K085 and On) ..... 56-20 / Page 15

Door

1. Description ..... 56-30 / Page 1
2. Maintenance Practices ..... 56-30 / Page 1
   A. Door and Emergency Exit Window ..... 56-30 / Page 1

This Page Intentionally Left Blank

WINDOWS

1. General

The windows and the windshield in the E1000 are made of a layer of polyvinyl butyral sandwiched between two layers of stretched acrylic. They are bonded to joggles in the fuselage on the inside of the cockpit, the passenger cabin, the door, and the emergency exit. All the windows are fixed and cannot be opened. The windshields are not field replaceable, contact Epic LLC if windshield replacement is required.

Windshields:
CoolView - *Aircraft serial numbers K088 and On:*
Lee Aerospace CoolView windshields are installed. CoolView windshields use a thin metallic barrier within the acrylic layers to block infrared heat.

Standard - *Aircraft serial numbers K003 - K087:*
Lee Aerospace multi-layer acrylic windshields are installed.

Cabin Windows:
CoolView - *Aircraft serial numbers K085 and On (Standard Equipment):*
Lee Aerospace CoolView windows are installed. CoolView windows use a thin metallic barrier within the acrylic layers to block infrared heat. In CoolView installations, the dimmable panes are replaced with either clear or tinted frost panes.

Dimmable - *Aircraft serial numbers K003 - K084 (Optional K085 and On):*
The eight cabin windows, including the entry door and emergency exit, have an inner pane with a polarizing film that allows them be lightened or darkened.

At the base of each window is a control panel with a "+" button (makes the window darker), a "-" button (makes the window lighter), an LED indicator of window opacity, and a blue LED that when lit indicates there is power to the window.

The pilot controls the dimmable windows using a three position knob. At the pilot's discretion the windows can be set to fully dim, fully clear, or manual control (window control panel active). When set by the pilot to fully dim or fully clear the passengers have no control over the windows opacity.When power is removed or in the event of a failure, the windows default to dimmed.

2. Tools

Table 56-00.1: Special tools

Item	Part Number	Supplier
Rotary Cutter with 1-inch cutting disc.	-	Any
Masking Tape	233+	Scotch
Electrician Tape	-	Any
150-grit Aluminum Oxide Sandpaper	B0912DO	3M
80-grit Aluminum Oxide Sandpaper	-	3M
Gloves, Synthetic, Powder-Free Latex or Nitrile	-	
Spreader, Blue Flexible	IF3X4S	Industrial Finishes
Plastic Razor	-	Any
Phenolic or Hardwood Utility Knife	-	Any
Inspection Prism Kit	SP-PRIKT	LP Aero Plastics
Flashlight	-	Any

FLIGHT COMPARTMENT

1. Description

This chapter defines the limits of repairable damage and gives the procedures for repair of the windshield only.

2. Maintenance Practices

A. Windshield

(1) Inspection

If cracking, crazing, or delamination is found contact Epic aircraft, LLC for instructions. For scratches or chips, refer to the Approved Repairs instructions in this section.

Note: The inspection prism lets the inspector see the windshield underneath the centerpost and the bonding flange around the perimeter of the windshields.

(a) Clean the exterior and interior of the windshields (refer to Chapter 12-20).

(b) Inspect the windshields for cracking, crazing, delamination, or any damage.

(c) Using the inspection prism kit (refer to Chapter 56-00) and a flashlight, inspect both windshields for discrepancies at the center post.

WARNING: Sliding the prism on the windshield will cause scratches. Carefully lift and place the prism in each area to be inspected.

(d) Using the inspection prism kit and a flashlight, inspect for delamination of the bonded flange all around the perimeter of both windshields.

(e) Clean the inspection couplant off of the windshield.

Figure 56-10.1: Windshield Inspection

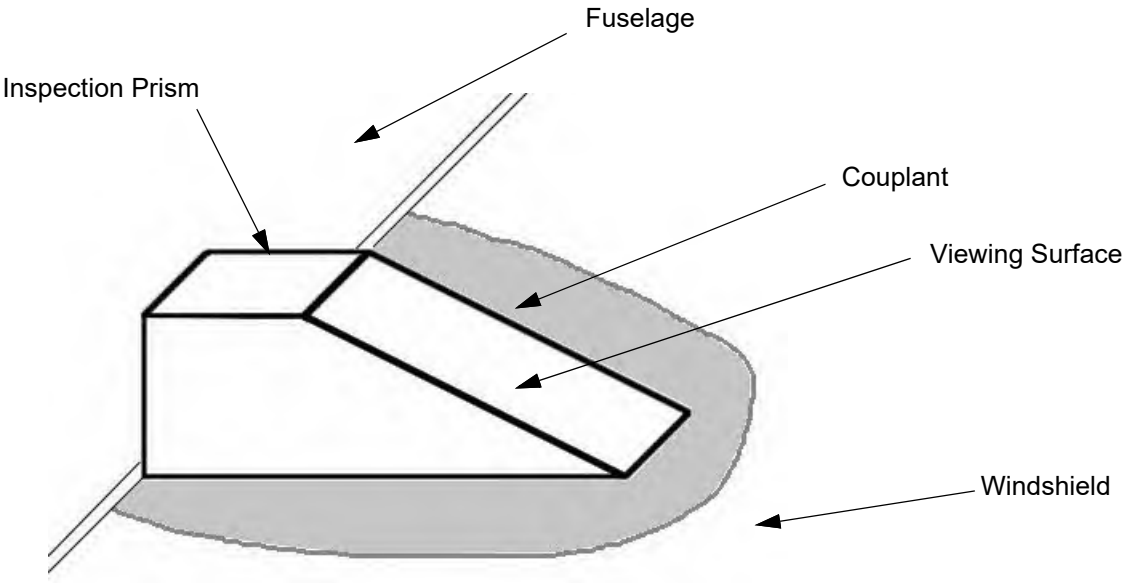

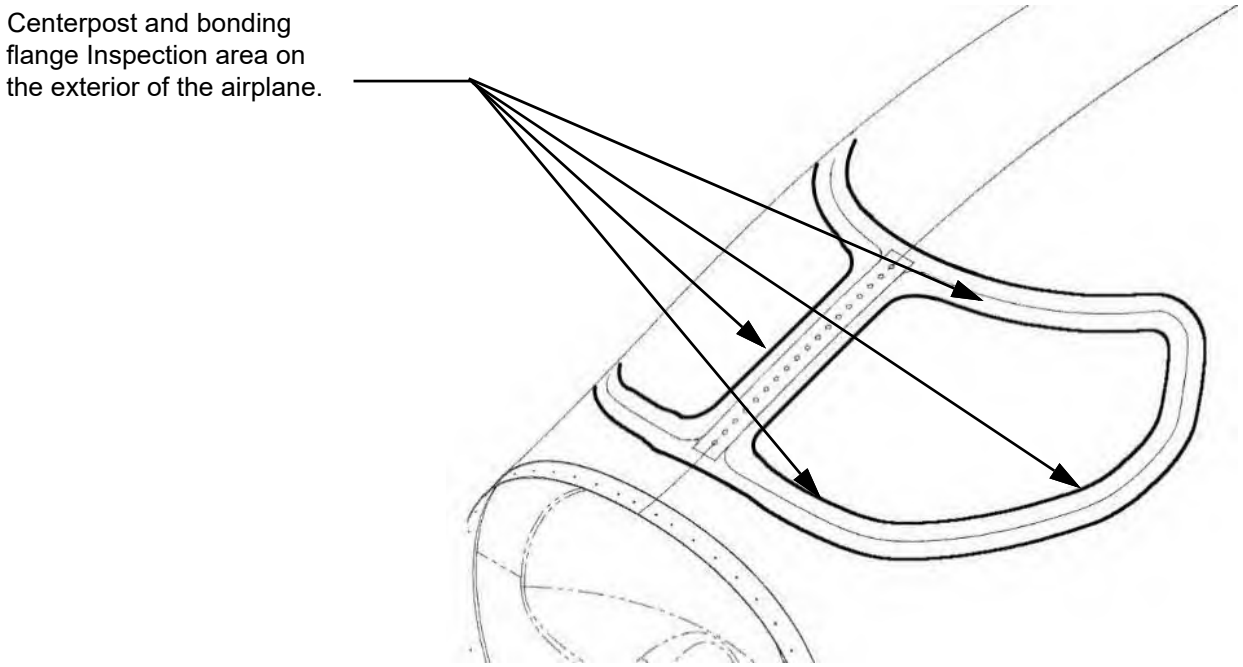

B. Approved Repairs

Table 56-10.1: Required Tools and Materials

Item	Description	Part Number	Qty
1.	Depth Gauge	Commercially Available	1
2.	6" DA Sander, Oil Free	Commercially Available	1
3.	UT Thickness Gauge	PosiTector Ultrasonic Thickness Gauge	1
4.	Wet/Dry Sandpaper, from 220 to 1200 grit	Commercially Available	A/R
5.	Micro Mesh Acrylic Restoral Kit	HP-100	1
6.	Distilled or Deionized Water	Commercially Available	A/R
7.	Micro Mesh 6" Sanding Kit, 1,500-12,000 Grit	3S0060PV(PAS)	1
8.	3M Finesse-It Polishing Compound	81235	A/R
9.	3M Perfect-It Rubbing Compound	06085	A/R
10.	3M Perfect-It Machine Polish	06064	A/R
11.	100% cotton flannel cloth.	Commercially Available	A/R
12.	Ultrasonic Couplant	Commercially Available	A/R
13.	Window Cleaner	PRIST Acrylic and Plastic Windscreen Cleaner	A/R
14.	E1000 Windshield Calibration Standard	-	1

Table 56-10.2: Windshield Thickness

Windshield (Pilot's or Copilot's)	Nominal Thickness	Minimum Thickness
Outer Ply	0.414"	0.374"
Inner Ply	0.250"	0.230"
Windshield Assembly	0.714" (Includes 0.050" Polyvinyl Butyral layer.)	-

CAUTION: Make sure to protect all electrical components in and around the work area when working on the inside of the windshield.

(1) Apply protective covering and remove any interior trim and components as needed to perform the repair.

CAUTION: Do not use alcohol or other solvents.

(2) Clean the windshield thoroughly prior to performing any maintenance.

(3) Measure the depth of damage to determine if a repair is possible. Refer to table 56-10.3 for repair limits.

(a) Use a depth gauge where possible to determine the depth of the damage.

(b) If the location prevents the use of a depth gauge, use an alternate acceptable method to measure the depth of damage.

CAUTION: Any damage on the inner pane greater than 0.010” deep requires repair before pressurized flight. Any damage on the outer pane greater than 0.020” deep requires repair before pressurized flight.

(4) Measure the thickness of the windshield in multiple locations in and around the damage area. Refer to the UT thickness gauge manufacturer’s instructions.

CAUTION: Minimize distortion as much as possible, especially in the pilot's center viewing area. Any distortion in the pilot's center viewing area must not create an unsafe condition or cause unusual eye strain or fatigue.

(5) Repair the damage in accordance with the Micro Mesh kit instructions.

(6) Measure the thickness of the windshield in the repair area after the repair. Refer to the UT thickness gauge manufacturer’s instructions. make sure the thickness is within the required limits.

Figure 56-10.2: Windshield Zones

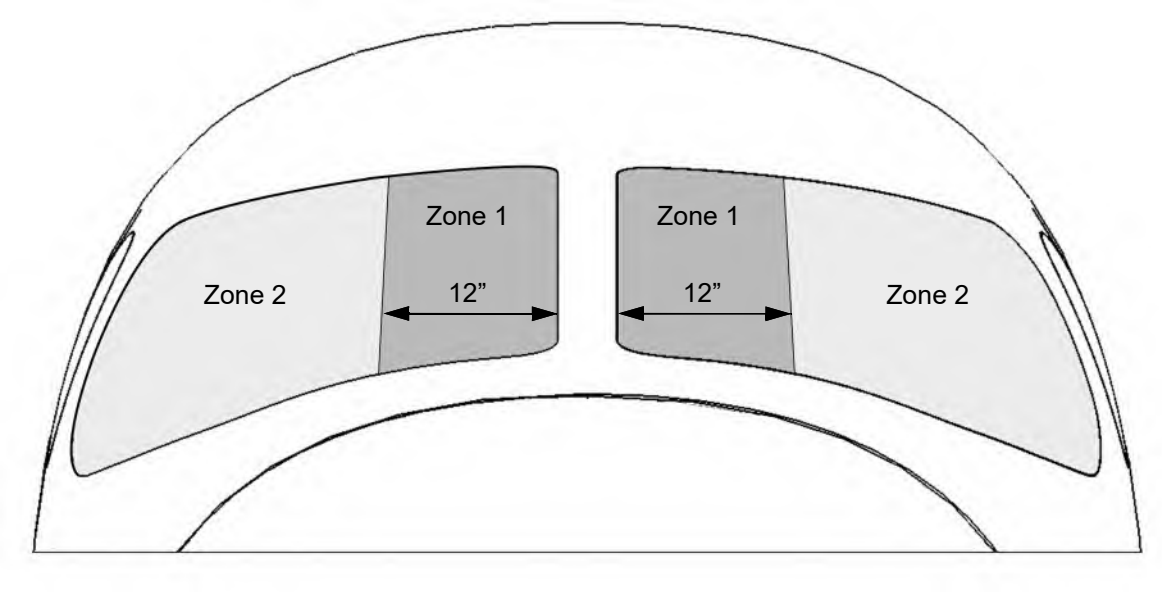

Table 56-10.3: Windshield Zones

Damage Type	Location	Limit
Scratches	Inner Pane, Zone 1	0.010" deep x 2.0" long. Remaining pane thickness must be 0.230" or greater.
Scratches	Inner Pane, Zone 2	0.010" deep x unlimited length. Remaining pane thickness must be 0.230" or greater.
Scratches	Outer Pane, Zone 1	0.020" deep x 2.0" long. Remaining pane thickness must be 0.374" or greater.
Scratches	Outer Pane, Zone 2	0.020" deep x unlimited length. Remaining pane thickness must be 0.374" or greater.
Chips	Inner Pane, Zone 1 or Zone 2	0.010" deep x 0.125" dia. Remaining pane thickness must be 0.230" or greater.
Chips	Outer Panes, Zone 1 or Zone 2	0.020" deep x 0.207" dia. Remaining pane thickness must be 0.374" or greater.

C. Windshield Edge Seal

(1) Removal

(a) Mask the windshield viewing surface to protect it during this procedure.

(b) Mask the inner and outer perimeter of the windshield edge seal.

(c) Using a non-metallic scraper, remove the old edge seal.

(d) Clean the entire sealing surface with isopropyl alcohol.

(2) Installation

(a) Mask both windshields for sealant application as follows (recommended method):

i. Using the ½" masking tape, create the 0.50" sealant width by running the tape over the joggle between the windshield and fuselage/center post. Refer to figure 56-10.1 for placement and dimension requirements.

ii. Apply masking tape to both sides of the masking tape installed in step (i).

iii. Remove the masking tape installed in step (i).

iv. Lightly scuff the sealing surface of the windshield and fuselage/center post with ultra-fine Scotch-Brite.

v. Thoroughly clean the sealing surface with isopropyl alcohol.

(b) Apply PR-1425 sealant in accordance with the manufacturer's instructions around the full perimeter of both windshields.

(c) Smooth the sealant around the perimeter of the windshields.

Note: A soap and water mixture in a spray bottle can be used to smooth areas that need touch up.

(d) Remove the mask and allow the sealant to cure in accordance with the manufacturer's instructions.

(e) Remove the protective masking from the fuselage and windshield.

Figure 56-10.1: Windshield Edge Seal

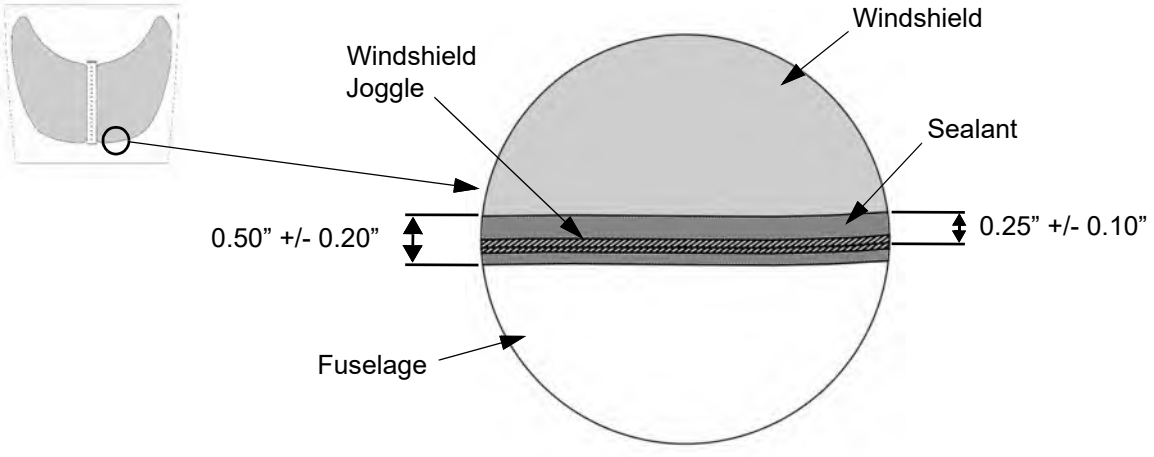

PASSENGER COMPARTMENT

1. Description

This chapter gives the removal and installation procedures for the passenger compartment windows, refer to Chapter 56-30 for the door window and emergency exit windows.

Note: Several installation options are available; clear acrylic with a dimmable panes and CoolView with either tinted or clear frost panes. Mixing of installation configurations in an aircraft is not allowed.

2. Maintenance Practices

A. Window

(1) Removal

(a) Remove the seats adjacent to the window to be removed (refer to Chapter 25-10 and 25-20).

(b) Remove the interior panel from around the window (refer to Chapter 25-50).

(c) Remove the window seal ring (refer to Chapter 56-20.2.B).

(d) Remove the four bolts, washers, and bumper tabs from the attach brackets.

(e) Using a phenolic or hardwood razor carefully cut a “V” in the adhesive between the exterior fuselage and the window. If done carefully a strip of the adhesive can then be peeled off. Repeat this process on the interior of the airplane.

CAUTION: Use extreme caution when separating the window from the fuselage joggle. No damage to the carbon surface is allowed. Contact Epic Aircraft for disposition if damage occurs.

(f) Using light hand pressure, push against the exterior side of the window while cutting the adhesive between the window and the window joggle.

(g) Using a phenolic or hardwood scraper remove as much of the adhesive from the fuselage as possible.

(2) Installation

(a) Protect the new window from scratches by using the original protective backing or by replacing the backing with a layer of protective Scotch® 233+ masking tape. Ensure full coverage of the window surfaces that will not be bonded to the fuselage.

(b) Make a handle out of masking tape positioned approximately in the center of the exterior side of the window.

(c) Carefully remove approximately one inch of protective window cover from around the perimeter of the exterior side of the window then mask off the window immediately adjacent to the bonding surface using 3M Super 33+ vinyl electrical tape, or equivalent.

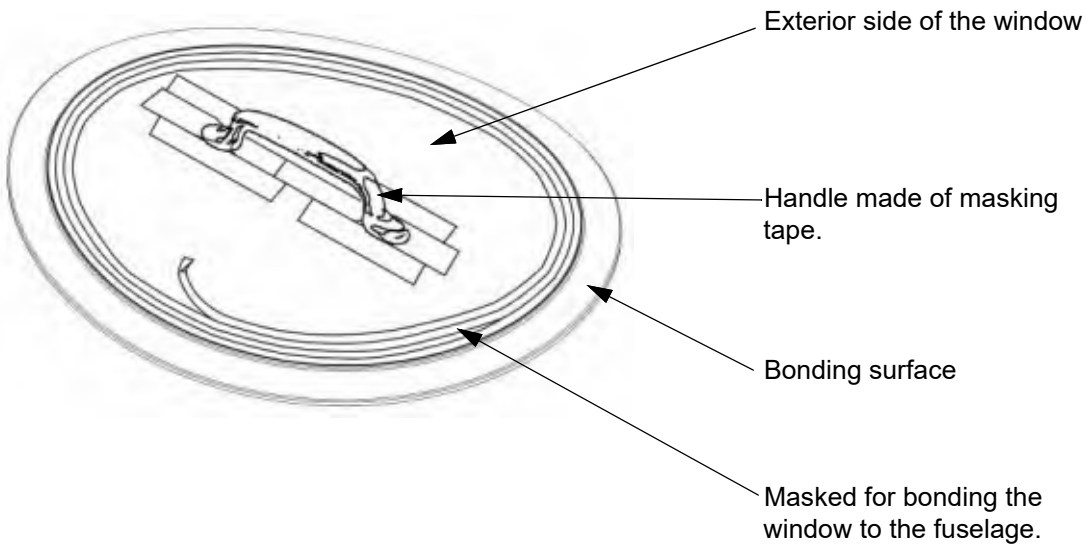

(d) Using 3M Super 33+ vinyl electrical tape, or equivalent, mask off the exterior of the airplane around the window opening.

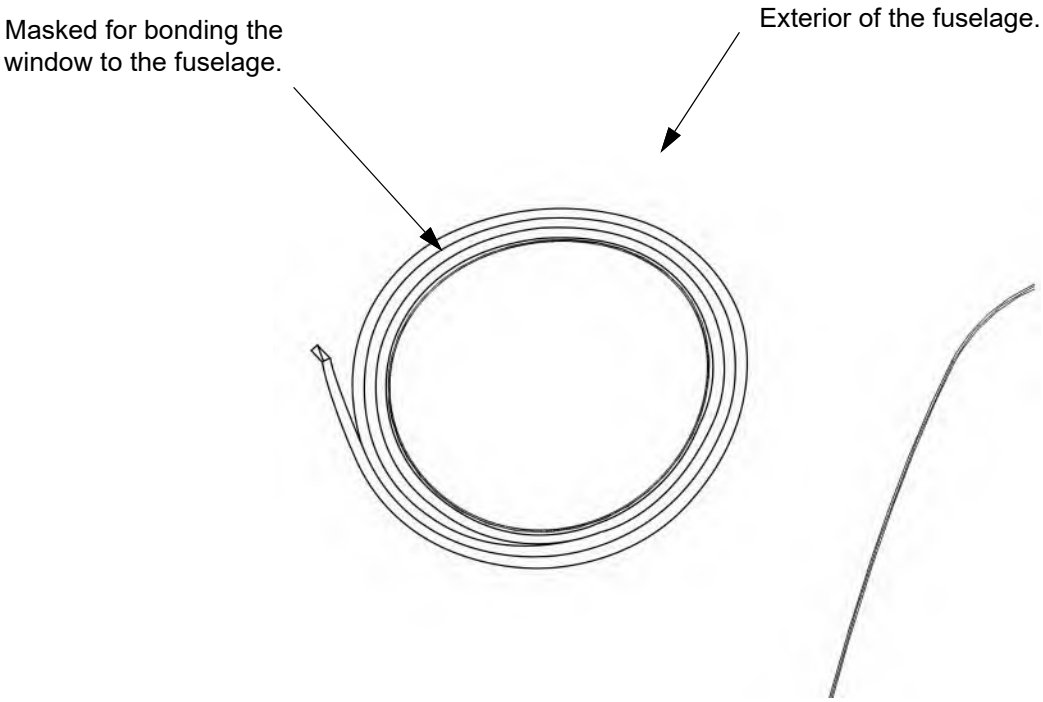

(e) Pre-fit the window into the window joggle on the interior of the fuselage. Temporarily glue four small wooden blocks equidistant around the perimeter of the window using cyanoacrylate adhesive.

Note: Orient the window with the part identification label at the bottom of the window.

(f) Make alignment marks on the blocks and the window using a permanent marker.

(g) Hand sand the bonding surfaces of the window using 80 to 120-grit aluminum oxide sandpaper followed by a cleaning using isopropyl alcohol and a clean lint free cloth. Wait 15 minutes for the isopropyl alcohol to flash dry.

(h) Do a water break test on the prepped bonding surface as follows:

i. Clean the prepped surface with isopropyl alcohol and a clean, lint free rag until no evidence of dust or contaminations remains. Allow to flash dry before performing the water break test.

ii. Spray the bonding surface with a spray bottle filled with distilled water or deionized water. Fully wet out each section of the bonding surface with one spray for ease of inspection.

iii. If the surface has been properly prepped, the water will “curtain” on the surface and run off without beading.

iv. Repeat this process until a water break test on the sanded surface is water break free.

(i) Hand sand the composite surface of the window joggle using 80 to 120-grit aluminum oxide sandpaper followed by a cleaning using isopropyl alcohol and a clean lint free cloth. Wait 15 minutes for the isopropyl alcohol to dry.

CAUTION: Do not over sand the composite material. Do not sand through the fiber weave of the composite material.

(j) Apply 3M AC-137 Adhesion Promoter to the bonding surfaces per the manufacturers instructions.

(k) Install six 0.020” bonding rods, equally spaced, around the perimeter of the window bonding surface with a small amount of cyanoacrylate adhesive.

Note: Bonding rods are used to prevent the adhesive from being squeezed out at any point of the windows bonding surface.

(l) Dry fit the window and make sure the exterior surface of window is flush with exterior surface of fuselage skin +.050” / -.100”. Make sure the window part identification is at the bottom when the window is being fit and installed.

Note: Change bonding rod thickness if needed to achieve the correct fit.

(m) Apply PR-1425 B 1/2 window sealant to the bonding surfaces of the airplane and the window. Mix the sealant per manufacturer’s instructions.

(n) Put the window into place using the alignment marks for positioning.

CAUTION: Make sure the new window is masked to protect it from damage from the spreader bar. The removed window may be placed between the spreader bar and the new window to help disperse the load on the new window.

(o) Hold the window using a spreader bar put in the center of the window and against the opposite side of the cabin. Maintain a flush condition (+0.050" to -0.100") between the exterior surfaces of the window and the fuselage skin.

(p) Smooth out the sealant on the exterior of the window installation then remove the masking tape from the window and the fuselage to give a sharp joint.

(q) Let the sealant fully cure (refer to the sealant manufacturer's instructions).

(r) Remove the spreader bar.

(s) Remove the masking tape or backing protecting the interior and exterior surfaces of the window.

(t) Install the four bumper tabs on the attach brackets with the bolts and washers.

(u) If removed, install the dimmer pane aircraft SN: K003 - K085, except K014 (refer to Chapter 56-20.2.C) or frost pane aircraft SN: K014, K086 and on (refer to Chapter 56-20.2.E).

(v) Install the window seal ring if equipped (refer to Chapter 56-20.2.B).

(w) Install the interior panels surrounding the window (refer to Chapter 25-20).

(x) Install the seats (refer to Chapter 25-10 and 25-20).

(3) Inspection

If cracking or delamination is found contact Epic Aircraft, LLC for instructions.

(a) Clean the exterior and interior of the windows (refer to Chapter 12-20).

(b) Inspect the windows for crazing, scratches, cracks, dings, spalling, etc.

i. Surface scratches, on either side of the window, are allowable up to 0.010" deep and 1" in length.

ii. Edge chips at the periphery of the rabbet step are allowable with a maximum 0.25" width by 0.5" length by 0.140"depth.

(c) Using the inspection prism kit and a flashlight, inspect for delamination of the bonded flange all around the perimeter of the windows.

(d) Clean the inspection couplant off of the window.

Figure 56-20.1: Window Installation (Sheet 1 of 3)

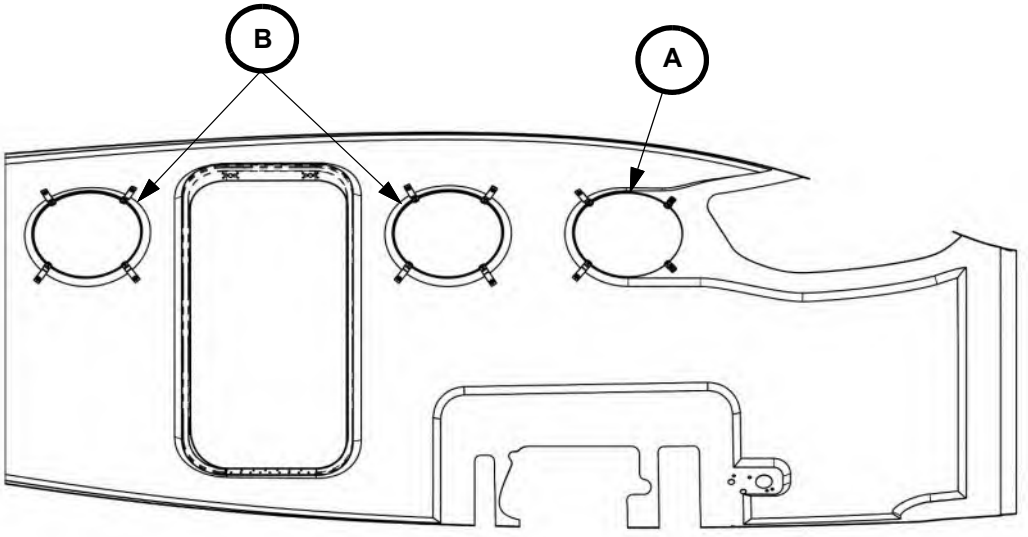

Left Side Windows

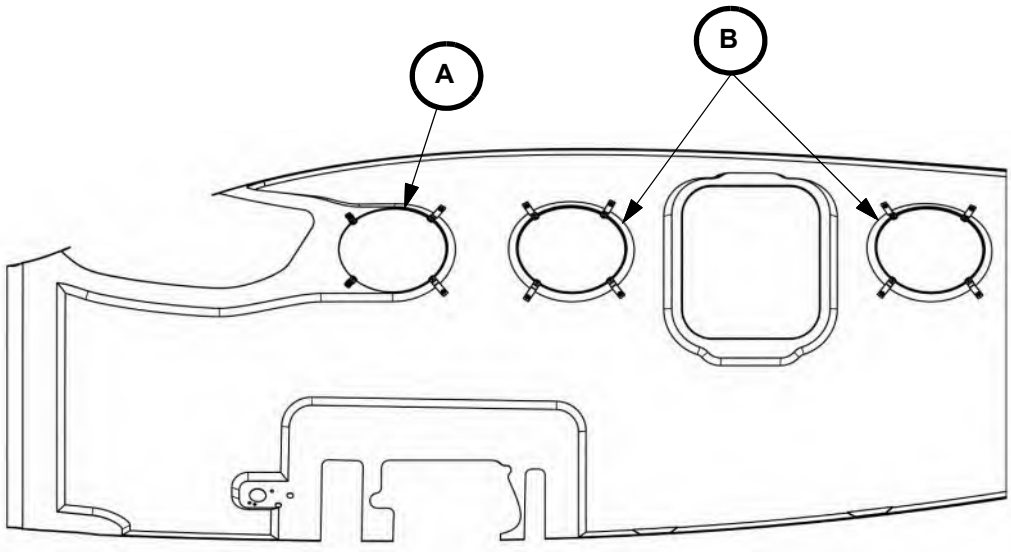

Right Side Windows

Figure 56-20.1:Window Installation (Sheet 2 of 3)

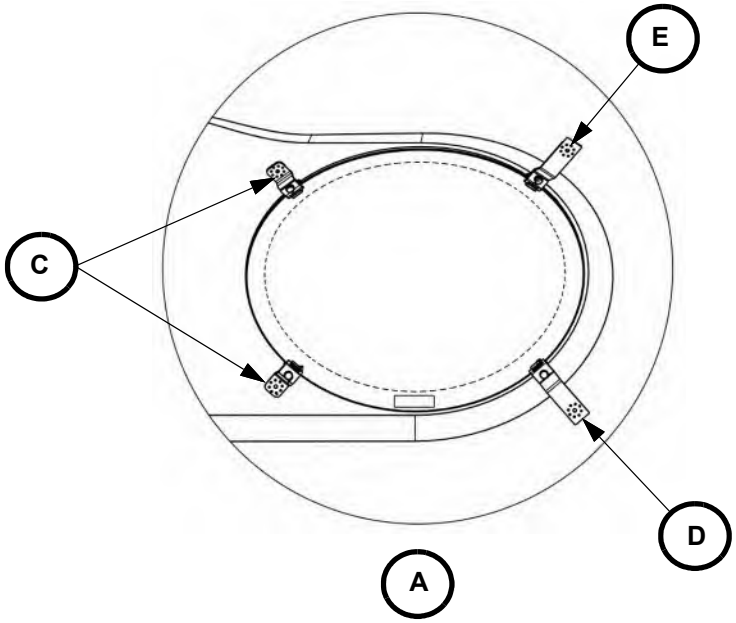

Right Side Shown Left Side Opposite

LEGEND
1. Window
2. Dimmer or Frost Pane
3. Fuselage Skin
4. Window Attach Bracket Assembly
5. PR-1425 B 1/2 Sealant
6. Adhesive:
   - Plexus MA 300, or
   - Devcon Plastic Welder (14320 or 14385), or
   - Devcon Plastic Welder II (14340 or 14390), or
   - Loctite EA 9394 Aero, or
   - Loctite EA 9394.3 Aero

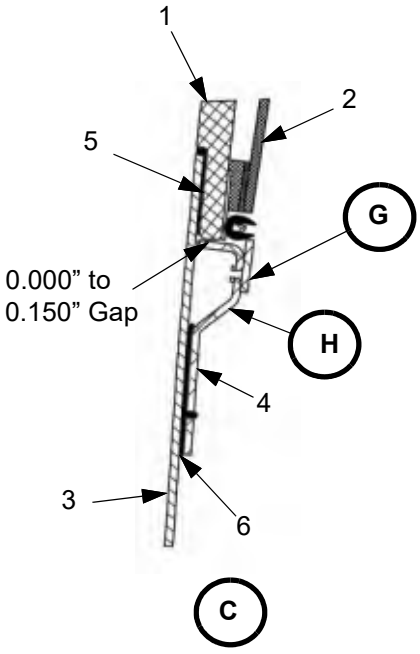

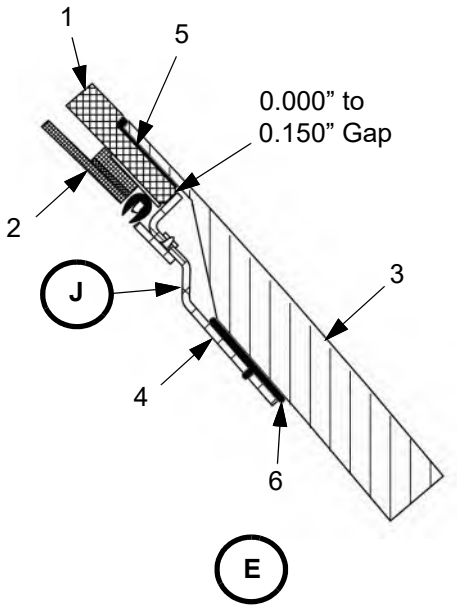

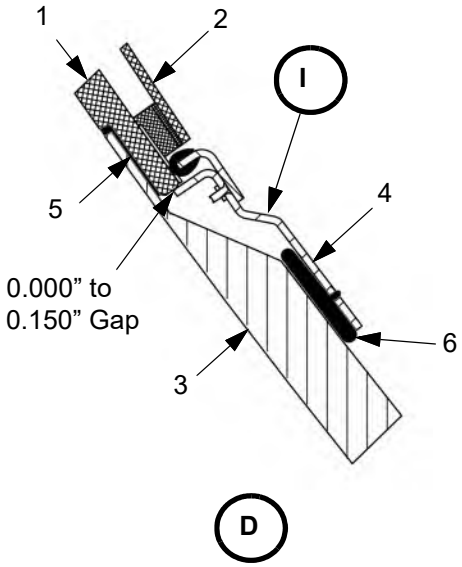

Figure 56-20.1:Window Installation (Sheet 3 of 3)

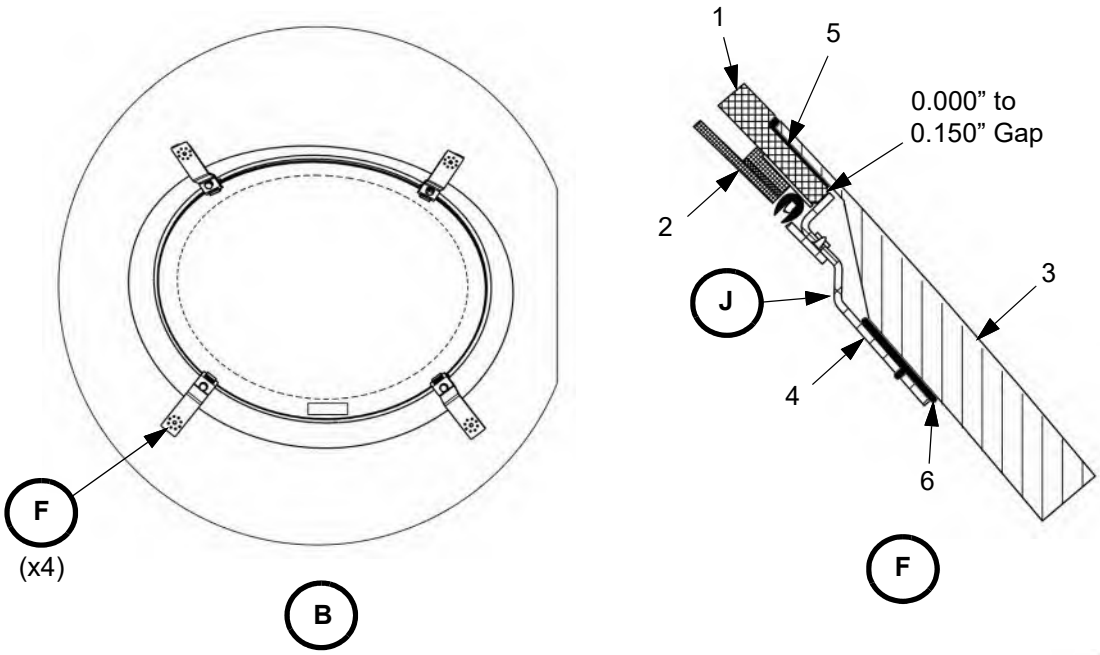

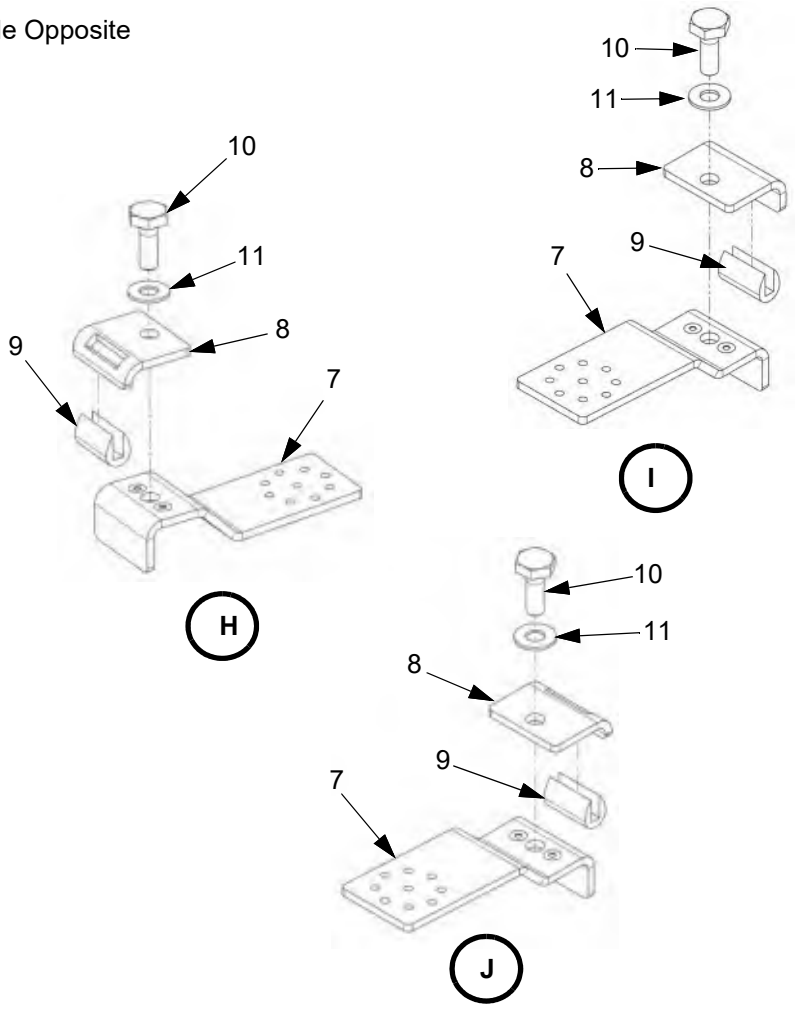

LEGEND

1. Window
2. Dimmer or Frost Pane
3. Fuselage Skin
4. Window Attach Bracket Assembly
5. PR-1425 B 1/2 Sealant
6. Adhesive:
   - Plexus MA 300, or
   - Devcon Plastic Welder (14320 or 14385), or
   - Devcon Plastic Welder II (14340 or 14390), or
   - Loctite EA 9394 Aero, or
   - Loctite EA 9394.3 Aero
7. Attach Bracket
8. Tab
9. Bumper
10. Bolt
11. Washer

B. Window Seal Rings

Note: Window seal rings are not installed on all aircraft. Installation is not required on aircraft if not equipped from the factory.

(1) Removal

(a) Set the BATT 1 and BATT 2 switches to OFF.

(b) Disconnect external electrical power from the airplane (refer to Chapter 24-40).

(c) Remove the seats adjacent to the window seal rings to be removed (refer to Chapter 25-20).

(d) Remove the upper finish panel from around the window (refer to Chapter 25-20).

(e) Carefully remove the window seal ring from the window.

Note: The window seal ring is attached with double-sided tape.

(f) Carefully clean any tape residue from the window.

(2) Installation

(a) Apply 3M Tape Primer 94 to both bonding surfaces.

(b) Install 1/2” 3M 5958 FR VHB tape around the perimeter of the window (refer to figure 56.20-2).

(c) Carefully install the window seal ring around the perimeter of the window.

Note: Make sure the window seal ring obscures the double-sided tape.

(d) Install the removed upper finish panel (refer to Chapter 25-20).

(e) Install the removed seats (refer to Chapter 25-20).

Figure 56-20.2: Window Seal Rings

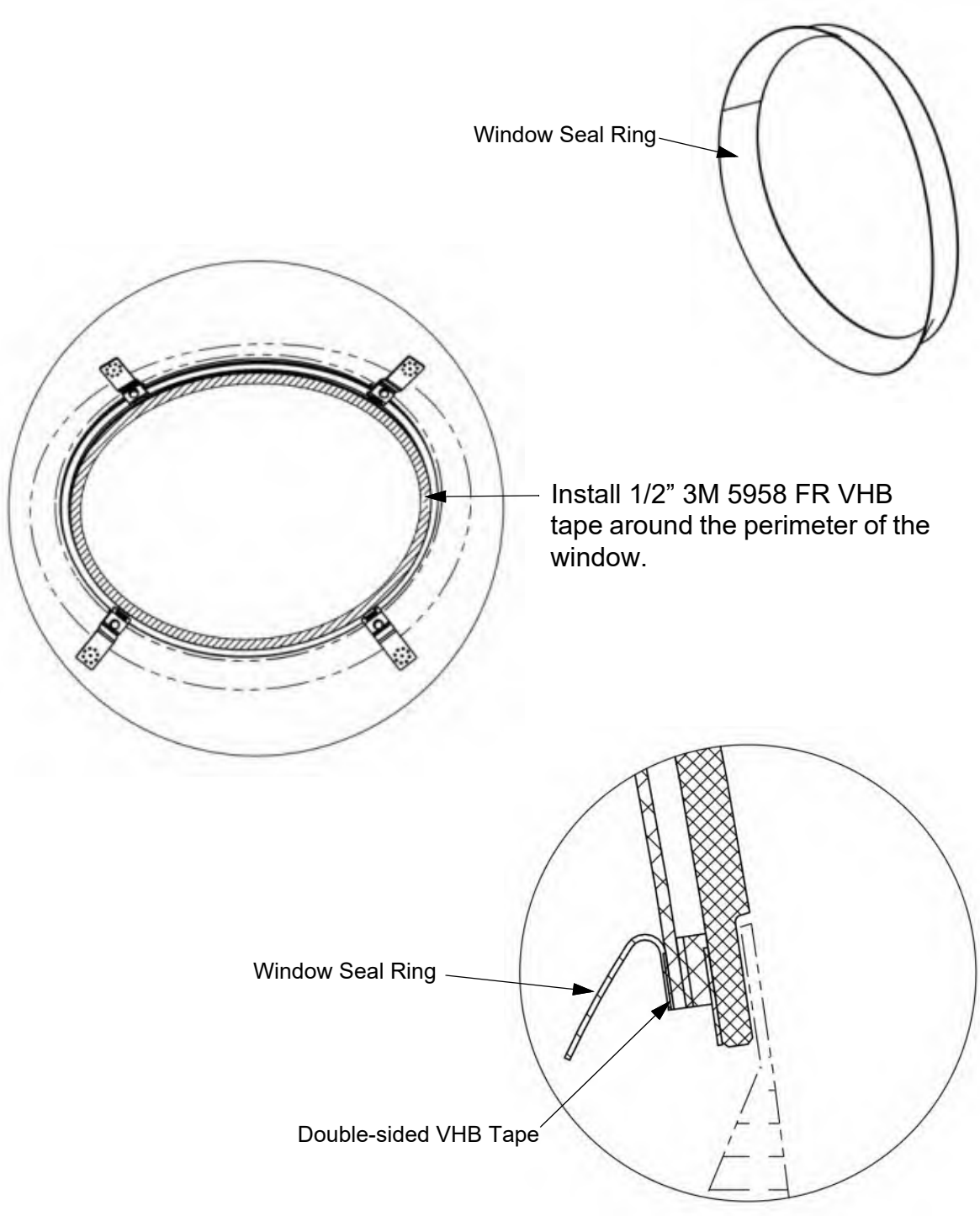

Install the window seal ring around the perimeter of the window. Make sure to install the window seal ring so the double-sided tape is obscured.

(Typical, 6 places)

C. Window Dimmer Pane (SN: K003 - K084, Optional K085 and On)

(1) Removal

(a) Set the BATT 1 and BATT 2 switches to off.

(b) Disconnect external electrical power from the airplane (refer to Chapter 24-40).

(c) Open and collar the WIN DIM circuit breaker.

(d) Remove interior panels as required to access the window, refer to Chapter 25-20, 52-10, or 52-20.

(e) Disconnect window control electrical connector.

(f) Remove the window sealing ring if installed, refer to 56-20.2.B.

CAUTION: Be careful not to damage the rubber spacer.

(g) Carefully cut the adhesive tape between the dimmer pane and the rubber spacer.

(h) Remove the dimmer pane.

(i) Once the dimmer pane is removed, protect the underlying window.

CAUTION: Be careful not to damage the bond between the spacer and window.

(j) Remove all residual adhesive tape from the dimmer spacer using citrus based cleaner and isopropyl alcohol.

(2) Installation

(a) Clean window using a suitable plastic window cleaner.

(b) Clean spacer bonding surface using isopropyl alcohol.

(c) Apply 3M Primer 94 to rubber spacer according to the manufacturer's instructions.

(d) Apply 3M VHB 5962 tape to the rubber spacer. Align the tape to the inside edge of the dimmer spacer. Carefully trim any excess VHB tape following the outside perimeter of the rubber spacer.

(e) Remove any window protection and clean window prior to window dimmer pane installation.

(f) Position dimmer pane to the window.

(g) Remove the protective film from the VHB tape while pressing the dimmer pane into position, working from bottom to top.

(h) Seal the edge of the window and dimmer pane using PPG PR1425-B 1/2 sealant.

Note: Do not block the vent hole in the dimmer spacer with sealant.

(i) Install chafe protection on the dimmer pane wire harness.

(j) Connect the dimmer electrical connector.

(k) Reset the WIN DIM circuit breaker.

(l) Do the Window Dimmer Operational Check.

(m) Install the window sealing ring if equipped, refer to 56-20.2.B.

(n) Install interior panels removed to access the window, refer to Chapter 25-20, 52-10, or 52-20.

(3) Operational Check

(a) Connect external electrical power to the airplane (refer to Chapter 24-40).

(b) Set the BATT 1 and BATT 2 switches to ON.

(c) With the WIN DIM circuit breaker IN rotate the WINDOW CONTROL switch located on the dimmer panel.

(d) When the switch is in the vertical position, the windows should remain dark. Verify manual control is locked on all eight windows.

(e) When the switch is rotated clockwise all windows should become transparent. Verify manual control is locked on all eight windows.

(f) When the switch is rotated counterclockwise all windows should be controlled from the window mounted interface. Verify all eight windows are unlocked and can be controlled from the window mounted interface.

(g) Set the BATT 1 and BATT 2 switches to off.

(h) Disconnect external electrical power from the airplane (refer to Chapter 24-40).

Figure 56-20.3: Window Dimmer Pane (SN: K003 - K084, Optional K085 and On)

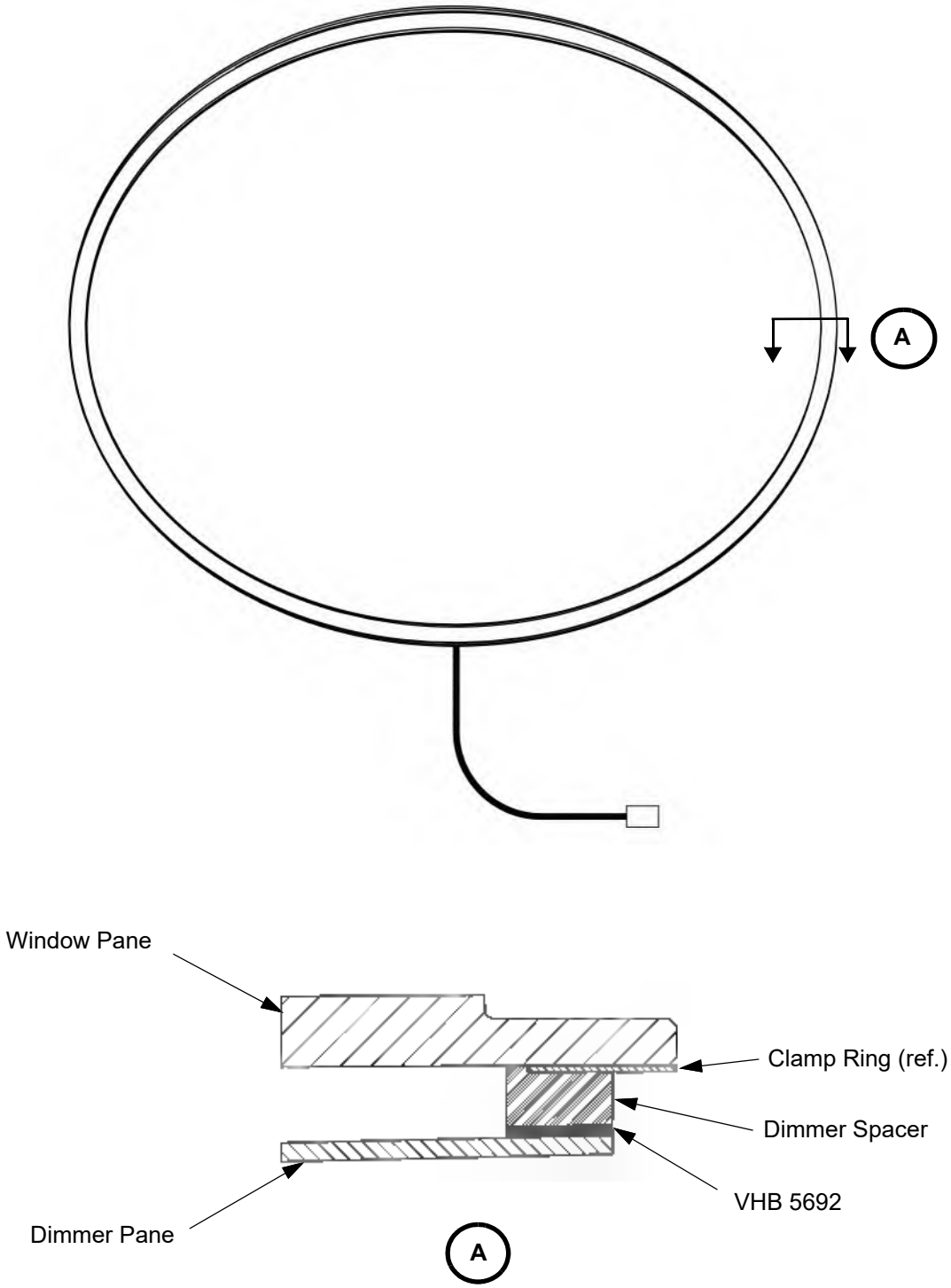

D. Window Dimmer Modules (SN: K003 - K084, Optional K085 and On)

(1) Removal

(a) Set the BATT 1 and BATT 2 switches to off.

(b) Disconnect external electrical power from the airplane (refer to Chapter 24-40).

(c) Pull and collar the WIN DIM circuit breaker.

(d) Remove the cargo net (refer to Chapter 25-50).

(e) Remove the interior finish panel in front of the aft pressure bulkhead (refer to Chapter 25-50).

(f) Disconnect the wiring harness from the dimmer module to be removed.

(g) Remove the four locknuts and washers attaching the dimmer module to the aft pressure bulkhead.

(h) Remove the dimmer module. Note the orientation of the dimmer module for re-installation.

(2) Installation

(a) Put the dimmer module in position on the studs on the aft pressure bulkhead. Ensure the dimmer module is correctly oriented.

(b) Attach the dimmer module to the aft pressure bulkhead using four washers and locknuts.

(c) Connect the wiring harness to the dimmer module.

(d) Reset the WIN DIM circuit breaker.

(e) Do the Window Dimmer Operational Check, refer to Chapter 56-20.2.C(3).

(f) Install the interior finish panel in front of the aft pressure bulkhead (refer to Chapter 25-50).

(g) Install the cargo net (refer to Chapter 25-50).

Figure 56-20.4: Window Dimmer Modules (SN: K003 - K084, Optional K085 and On)

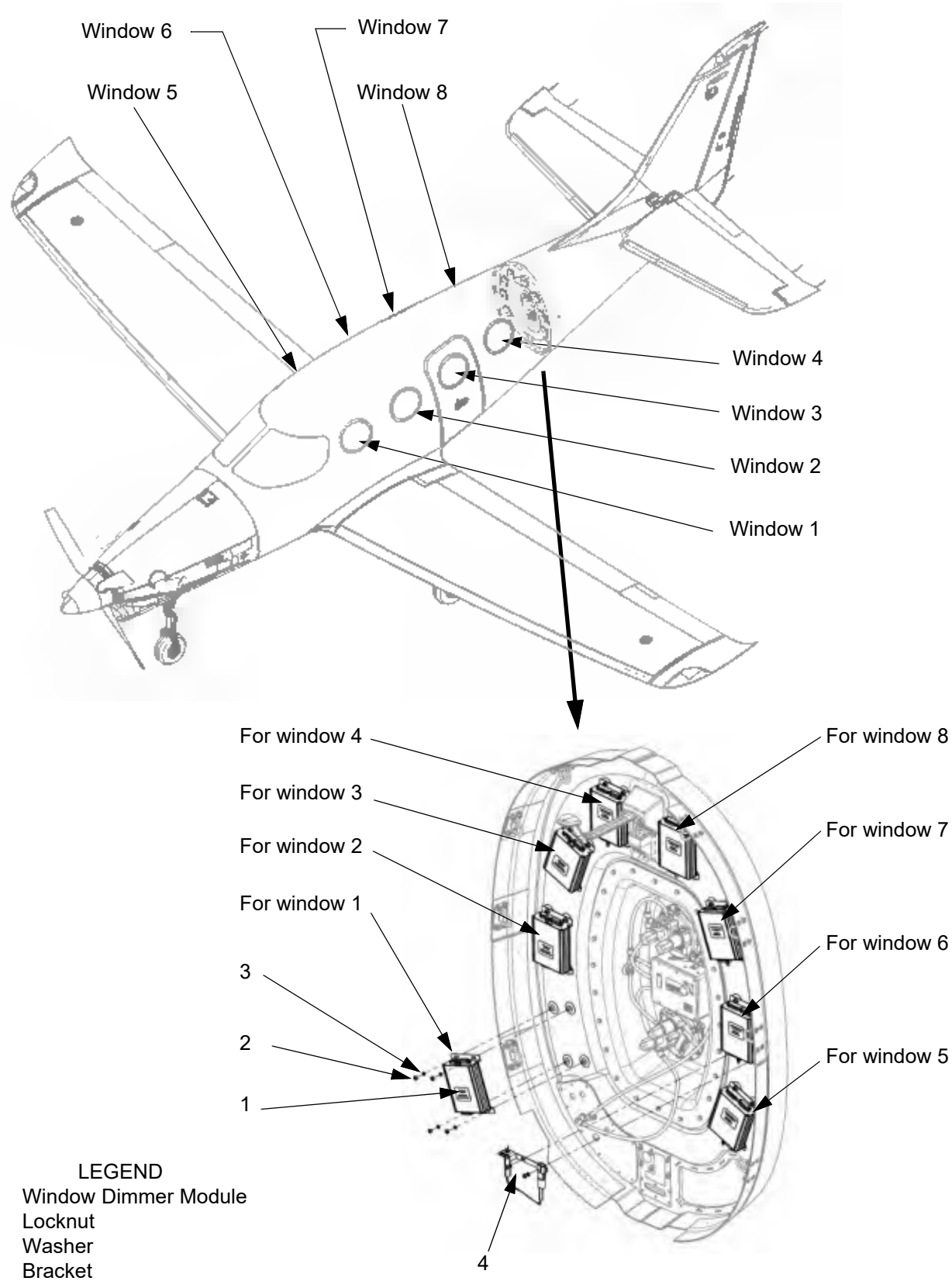

LEGEND

1. Window Dimmer Module
2. Locknut
3. Washer
4. Bracket

E. Window Frost Pane (SN: K085 and On)

(1) Removal

CAUTION: Use only plastic tools when removing the frost pane. Be careful not to damage the bond between the frost pane seal and window pane.

(a) Using a plastic trim tool (or similar), carefully pry the edge of the frost pane seal away from the frost pane at the lower edge of the window.

(b) Carefully work the trim tool behind the frost pane to leverage the frost pane from the channel in the frost pane seal.

(c) Slowly guide the trim tool around the perimeter of the frost pane to remove it from the channel in the frost pane seal.

(d) Remove the frost pane.

(e) Once the frost pane is removed, protect the underlying window. seal and window.

(2) Installation

Note: Wear cotton gloves during frost pane installation to prevent fingerprints and other contamination of the frost pane and window.

(a) Remove any protective covering from the window and make sure the window and frost pane clean and free of dust and debris (refer to Chapter 12-20).

(b) Put the frost pane in position and slide the upper edge of the frost pane into the frost pane seal channel.

(c) Carefully manually work as much of the frost pane into the channel as possible.

(d) Using a plastic trim tool, guide the remainder of the perimeter of the frost pane into the channel. Make sure the frost pane is fully seated in the channel.

Figure 56-20.5: Window Frost Pane (SN: K085 and On)

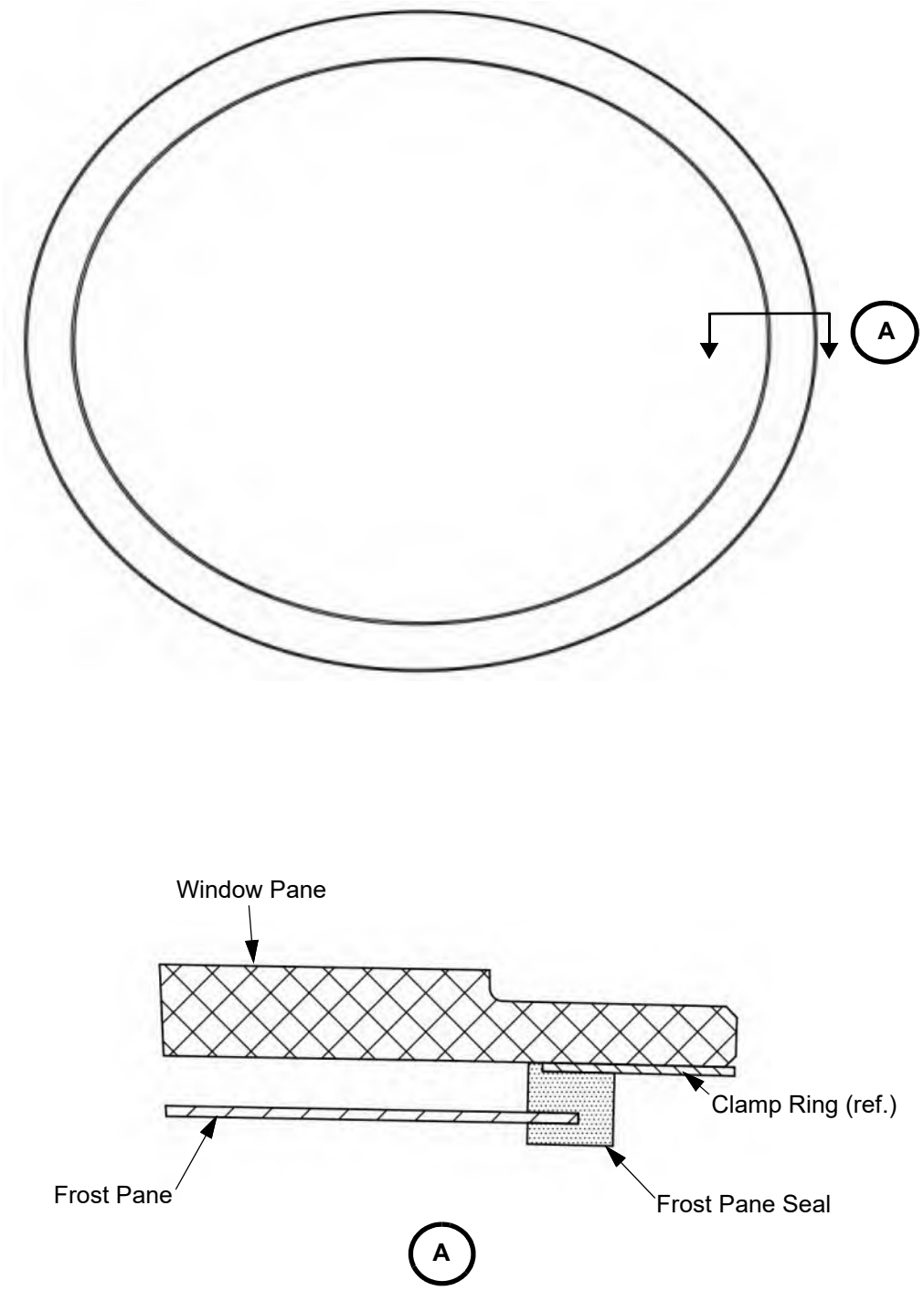

DOOR

1. Description

This chapter gives the removal and installation procedures for the windows in the door and the emergency exit.

Note: Several installation options are available; clear acrylic with a dimmable panes and CoolView with either tinted or clear frost panes. Mixing of installation configurations in an aircraft is not allowed.

2. Maintenance Practices

Note: For Seal Ring Replacement refer to 56-20.2B
For Dimmer Pane replacement refer to 56-20.2C
For Dimmer Module replacement refer to 56-20.2D
For Frost Pane Replacement refer to 56-20.2E

A. Door and Emergency Exit Window

(1) Removal

(a) The door and emergency exit windows can be changed with the door installed or removed from the airplane. If removing the door proceed to the next step, if not, proceed to step (b).

(b) Remove the door or emergency exit from the airplane (refer to Chapter 52-10 or 52-20).

(c) Carefully place the door on a suitable work surface supported to protect it from damage.

(d) Remove the interior panels (refer to Chapter 52-10 or 52-20).

(e) Remove the window seal ring if installed (refer to Chapter 56-20.2.B).

(f) Remove the four bolts, washers, and bumper tabs from the attach brackets.

(g) Using a phenolic or hardwood razor carefully cut a “V” in the adhesive between the exterior of the door or emergency exit and the window. If done carefully a strip of the adhesive can then be peeled off.

(h) Repeat this process on the interior of the door.

(i) Using light hand pressure, press against the exterior side of the window while cutting the adhesive between the window and the window joggle.

CAUTION: Do not damage the composite material of the window joggle when removing the window adhesive.

(j) Using a phenolic or hardwood scraper remove as much of the adhesive from the fuselage as possible.

(2) Installation

CAUTION: Protect the new window from scratches by using the original protective backing or by replacing the backing with a layer of protective Scotch® 233+ masking tape. Ensure full coverage of the window surfaces that will not be bonded to the door.

(a) Protect the new window from scratches by using the original protective backing or by replacing the backing with a layer of protective Scotch® 233+ masking tape. Ensure full coverage of the window surfaces that will not be bonded to the fuselage.

(b) Make a handle out of masking tape positioned approximately in the center of the exterior side of the window.

(c) Carefully remove approximately one inch of protective window cover from around the perimeter of the exterior side of the window then mask off the window immediately adjacent to the bonding surface using 3M Super 33+ vinyl electrical tape, or equivalent.

(d) Using 3M Super 33+ vinyl electrical tape, or equivalent, mask off the exterior of the airplane around the window opening.

(e) Pre-fit the window into the window joggle. Temporarily glue four small wooden blocks equidistant around the perimeter of the located window using cyanoacrylate.

Note: Position the window with the part identification label at the bottom of the window when the door is in the closed position.

(f) Make alignment marks on the blocks and the window using a permanent marker.

(g) Hand sand the bonding surfaces of the window using 80 to 120-grit aluminum oxide sandpaper followed by a cleaning using isopropyl alcohol and a clean lint free cloth. Wait 15 minutes for the isopropyl alcohol to flash dry.

(h) Do a water break test on the prepped bonding surface as follows:

i. Clean the prepped surface with isopropyl alcohol and a clean, lint free rag until no evidence of dust or contaminations remains. Allow to flash dry before performing the water break test.

ii. Spray the bonding surface with a spray bottle filled with distilled water or deionized water. Fully wet out each section of the bonding surface with one spray for ease of inspection.

iii. If the surface has been properly prepped, the water will “curtain” on the surface and run off without beading.

iv. Repeat this process until a water break test on the sanded surface is water break free.

CAUTION: Do not over sand the composite material. Do not sand through the fiber weave of the composite material.

(i) Hand sand the composite surface of the window joggle using 80 to 120-grit aluminum oxide sandpaper followed by a cleaning using isopropyl alcohol and a clean lint free cloth. Wait 15 minutes for the isopropyl alcohol to flash dry.

(j) Using masking tape, tape off the exterior and interior of the door around the window opening and the bonding surfaces.

(k) Apply 3M AC-137 Adhesion Promoter to the bonding surfaces per the manufacturers instructions.

(l) Install six 0.020” bonding rods, equally spaced, around the perimeter of the window bonding surface with a small amount of cyanoacrylate adhesive.

Note: Bonding rods are used to prevent the adhesive from being squeezed out at any point of the windows bonding surface.

(m) Dry fit the window and make sure the exterior surface of window is flush with exterior surface of fuselage skin +.050” / -.100”.

Note: Change bonding rod thickness if needed to achieve the correct fit.

(n) Apply PR-1425 B 1/2 window sealant to the bonding surfaces of the airplane and the window. Mix the sealant per manufacturer’s instructions.

(o) Put the window into place using the alignment marks for positioning.

(p) Hold the window in position to cure as follows:

i. If the door is install in the airplane, use a spreader bar put in the center of the window and against the opposite side of the cabin. Maintain a flush condition (+0.050” to -0.100”) between the exterior surfaces of the window and the fuselage skin.

ii. If not installed in the airplane, hold the window in position using a maximum of 100 pounds of shot bags. Maintain a flush condition (+.050” / -.100”) between the exterior surfaces of the window and the fuselage skin.

Note: The removed window may be placed between the spreader bar or shot bags and the new window to help disperse the load on the new window.

(q) Install the four bumper tabs on the attach brackets with the bolts and washers.

(r) Remove the masking tape against the sealant to provide a sharp edge.

(s) Let the sealant cure (refer to the sealant manufacturer’s instructions).

(t) If removed, install the dimmer pane aircraft SN: K003 - K085, except K014 (refer to Chapter 56-20.2.C) or frost pane aircraft SN: K014, K086 and on (refer to Chapter 56-20.2.E).

(u) Install the window seal ring if equipped (refer to Chapter 56-20.2.B).

(v) Install the interior panels (refer to Chapter 25-20).

(w) Remove the masking tape protecting the interior and exterior surfaces of the window.

(x) If removed, install the door or emergency exit from the airplane (refer to Chapter 52-10 or 52-20).

Figure 56-30.1: Door Window Installation

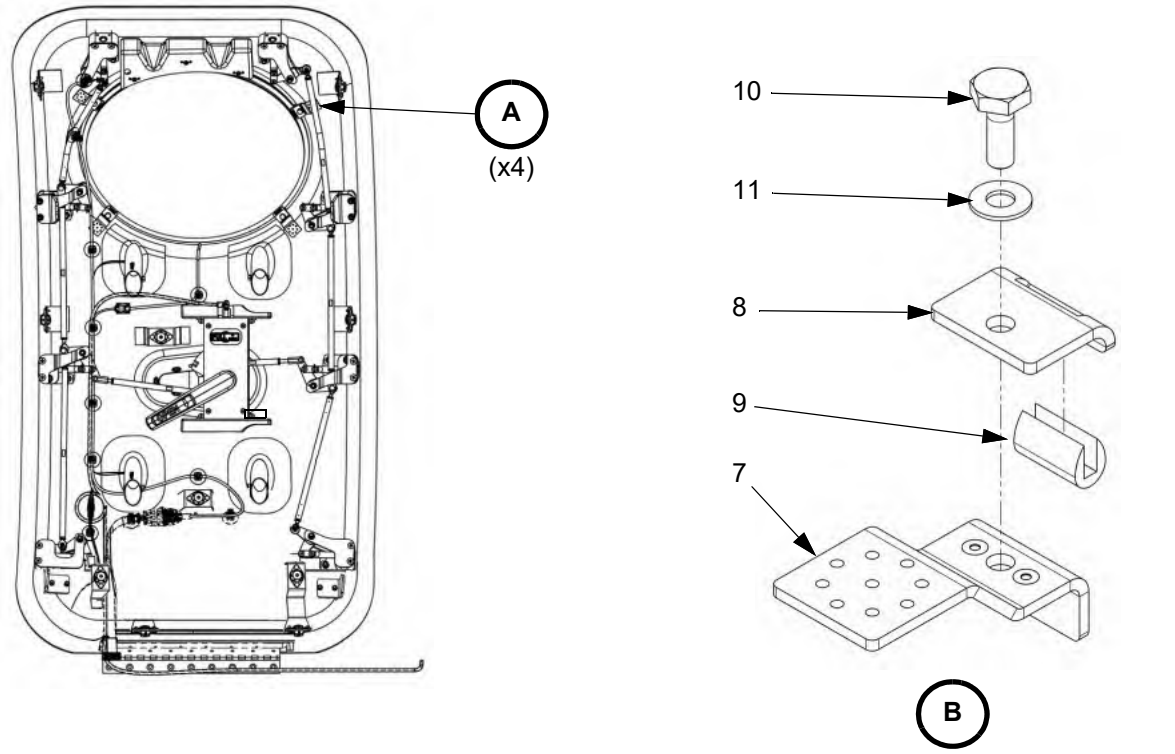

LEGEND

1. Window
2. Dimmer or Frost Pane
3. Fuselage Skin
4. Window Attach Bracket Assembly
5. PR-1425 B 1/2 Sealant
6. Adhesive:
   - Plexus MA 300, or
   - Devcon Plastic Welder (14320 or 14385), or
   - Devcon Plastic Welder II (14340 or 14390), or
   - Loctite EA 9394 Aero, or
   - Loctite EA 9394.3 Aero
7. Attach Bracket
8. Tab
9. Bumper
10. Bolt
11. Washer

Figure 56-30.2: Emergency Door Window Installation

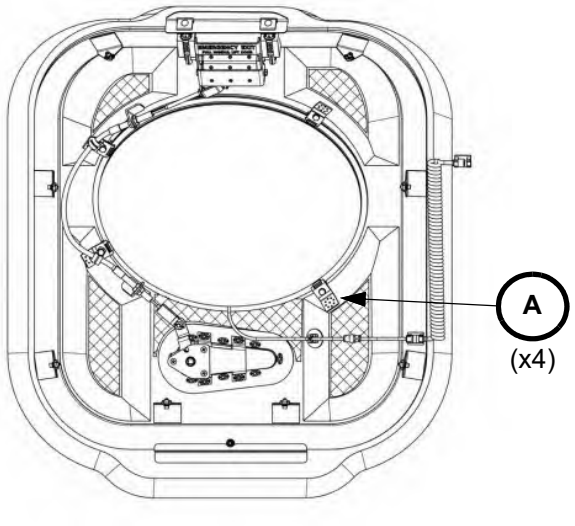

LEGEND

1. Window
2. Dimmer or Frost Pane
3. Fuselage Skin
4. Window Attach Bracket Assembly
5. PR-1425 B 1/2 Sealant
6. Adhesive:
   - Plexus MA 300, or
   - Devcon Plastic Welder (14320 or 14385), or
   - Devcon Plastic Welder II (14340 or 14390), or
   - Loctite EA 9394 Aero, or
   - Loctite EA 9394.3 Aero
7. Attach Bracket
8. Tab
9. Bumper
10. Bolt
11. Washer

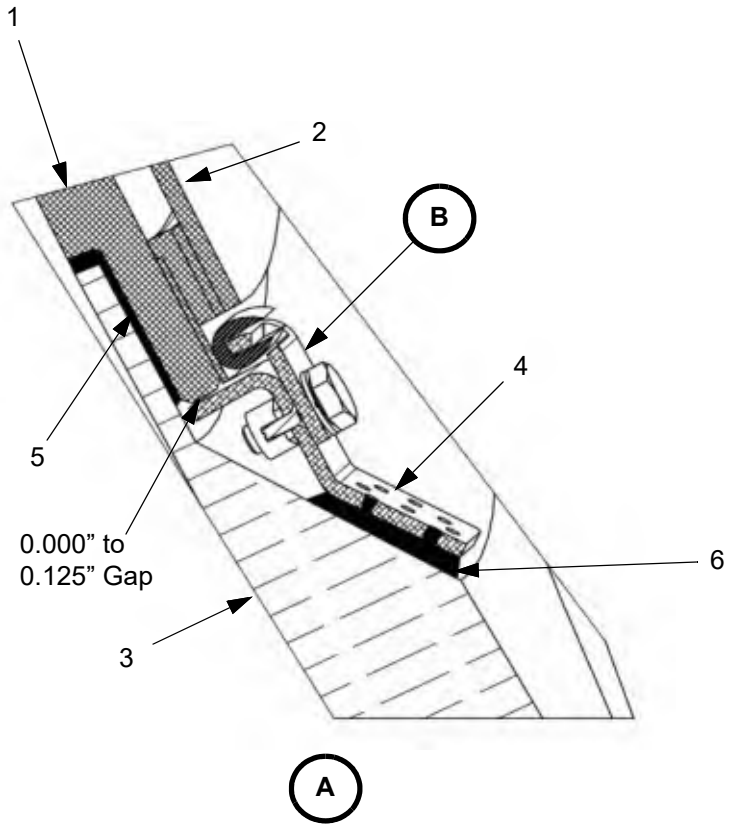

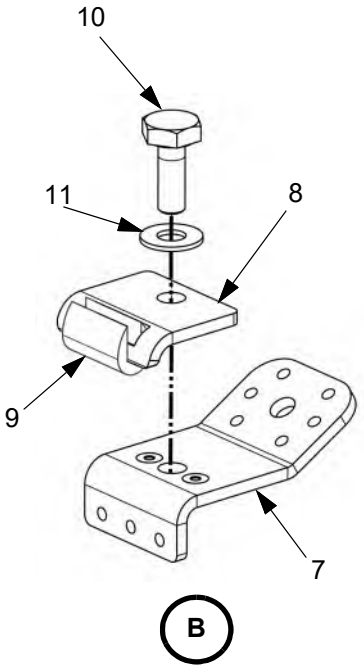

CHAPTER
57

Wings

This Page Intentionally Left Blank

List of Effective Pages

Chapter/Section	Page Number	Effective Date
57-Title	Page 1	02 Jan 2020
57-Title	Page 2	02 Jan 2020
57-LOEP	Page 1	10 Jul 2025
57-LOEP	Page 2	20 Oct 2023
57-TOC	Page 1	02 Jan 2020
57-TOC	Page 2	02 Jan 2020
57-00	Page 1	13 Apr 2020
57-00	Page 2	02 Jan 2020
57-10	Page 1	02 Jan 2020
57-10	Page 2	02 Jan 2020
57-10	Page 3	12 Nov 2025
57-10	Page 4	11 Nov 2020
57-10	Page 5	02 Jan 2020
57-10	Page 6	02 Jan 2020
57-10	Page 7	02 Jan 2020
57-10	Page 8	02 Jan 2020
57-10	Page 9	02 Jan 2020
57-10	Page 10	02 Jan 2020
57-30	Page 1	10 Jul 2025
57-30	Page 2	10 Jul 2025
57-30	Page 3	10 Jul 2025
57-30	Page 4	10 Jul 2025
57-30	Page 5	10 Jul 2025
57-30	Page 6	10 Jul 2025
57-30	Page 7	10 Jul 2025
57-30	Page 8	10 Jul 2025
57-40	Page 1	02 Jan 2020
57-40	Page 2	02 Jan 2020
57-40	Page 3	02 Jan 2020
57-40	Page 4	10 Jul 2025
57-40	Page 5	20 Oct 2023
57-40	Page 6	02 Jan 2020
57-40	Page 7	20 Oct 2023
57-40	Page 8	10 Jul 2025
57-40	Page 9	20 Oct 2023
57-40	Page 10	20 Oct 2023
57-40	Page 11	20 Oct 2023
57-40	Page 12	20 Oct 2023

57-40 ..... Page 13 ..... 20 Oct 2023
57-40 ..... Page 14 ..... 20 Oct 2023
57-40 ..... Page 15 ..... 20 Oct 2023
57-40 ..... Page 16 ..... 20 Oct 2023
57-40 ..... Page 17 ..... 20 Oct 2023
57-40 ..... Page 18 ..... 20 Oct 2023

57-50 ..... Page 1 ..... 02 Jan 2020
57-50 ..... Page 2 ..... 02 Jan 2020
57-50 ..... Page 3 ..... 02 Jan 2020
57-50 ..... Page 4 ..... 02 Jan 2020
57-50 ..... Page 5 ..... 02 Jan 2020
57-50 ..... Page 6 ..... 02 Jan 2020
57-50 ..... Page 7 ..... 02 Jan 2020
57-50 ..... Page 8 ..... 02 Jan 2020
57-50 ..... Page 9 ..... 02 Jan 2020
57-50 ..... Page 10 ..... 02 Jan 2020

57-60 ..... Page 1 ..... 02 Jan 2020
57-60 ..... Page 2 ..... 02 Jan 2020
57-60 ..... Page 3 ..... 02 Jan 2020
57-60 ..... Page 4 ..... 02 Jan 2020

57-80 ..... Page 1 ..... 02 Jan 2020
57-80 ..... Page 2 ..... 02 Jan 2020
57-80 ..... Page 3 ..... 02 Jan 2020
57-80 ..... Page 4 ..... 02 Jan 2020
57-80 ..... Page 5 ..... 02 Jan 2020
57-80 ..... Page 6 ..... 02 Jan 2020
57-80 ..... Page 7 ..... 02 Jan 2020
57-80 ..... Page 8 ..... 02 Jan 2020

CHAPTER 57

Table of Contents

List of Effective Pages ..... 57-LOEP / Page 1
Table of Contents ..... 57-TOC / Page1

Paragraph **Page Number**

Wings
1. General ..... 57-00 / Page 1
2. Tools ..... 57-00 / Page 1

Center
1. Description ..... 57-10 / Page 1
2. Maintenance Practices ..... 57-10 / Page 1
   A. Belly Panels ..... 57-10 / Page 1
   B. Wings Pin Replacement - Every 22,000 Hours ..... 57-10 / Page 3

Wing Tip
1. Description ..... 57-30 / Page 1
2. Maintenance Practices ..... 57-30 / Page 1
   A. Wing Tip (Without Radar Pod) ..... 57-30 / Page 1
   B. Wing Tip (With Weather Radar Pod) ..... 57-30 / Page 2
   C. Forward Lightning Protection Bonding Jumper ..... 57-30 / Page 6
   D. Aft Lightning Protection Bonding Jumper ..... 57-30 / Page 7

Airflow Modification Devices
1. Description ..... 57-40 / Page 1
2. Maintenance Practices ..... 57-40 / Page 1
   A. Leading Edge Stall Strips ..... 57-40 / Page 1
   B. Aileron Turbulators ..... 57-40 / Page 3
   C. Leading Edge Turbulators ..... 57-40 / Page 4
   D. Vortex Generators ..... 57-40 / Page 9
   E. Flight Testing ..... 57-40 / Page 12
   F. Flight Test Cards ..... 57-40 / Page 16

Flaps
1. Description ..... 57-50 / Page 1
2. Maintenance Practices ..... 57-50 / Page 2
   A. Flap Assembly ..... 57-50 / Page 2
   B. Flaps Hinge Fairing ..... 57-50 / Page 4
   C. Middle and Outboard Flaps Hinges ..... 57-50 / Page 5
   D. Inboard Flaps Hinges ..... 57-50 / Page 7

Ailerons

1. Description ..... 57-60 / Page 1
2. Maintenance Practices ..... 57-60 / Page 1
   A. Ailerons ..... 57-60 / Page 1
   B. Balancing ..... 57-60 / Page 4

Electrical Harness

1. Description ..... 57-80 / Page 1
2. Maintenance Practices ..... 57-80 / Page 1
   A. Electrical Harness ..... 57-80 / Page 1

WINGS

1. General

The wings are an assembly of carbon fiber skins bonded to carbon fiber spars and ribs. Both wings share a forward and aft spar making them one structure. The wings are attached to the fuselage at four points using bolts.

The interior of each wing is designed to act as a fuel tank in what is commonly know as a “wet” wing configuration.

2. Tools

Table 57-00.1: Special Tools

Item	Part Number	Supplier
Knife Edge or Bench	-	Any
Smart Level	-	Any
Scale accurate to ± 0.1 ounce	-	Any

Figure 57-00.1: Wings -- Overview

The upper wing skins are shown separated for clarity.

The wing skins are permanently bonded to the internal structure of the wings and cannot be removed.

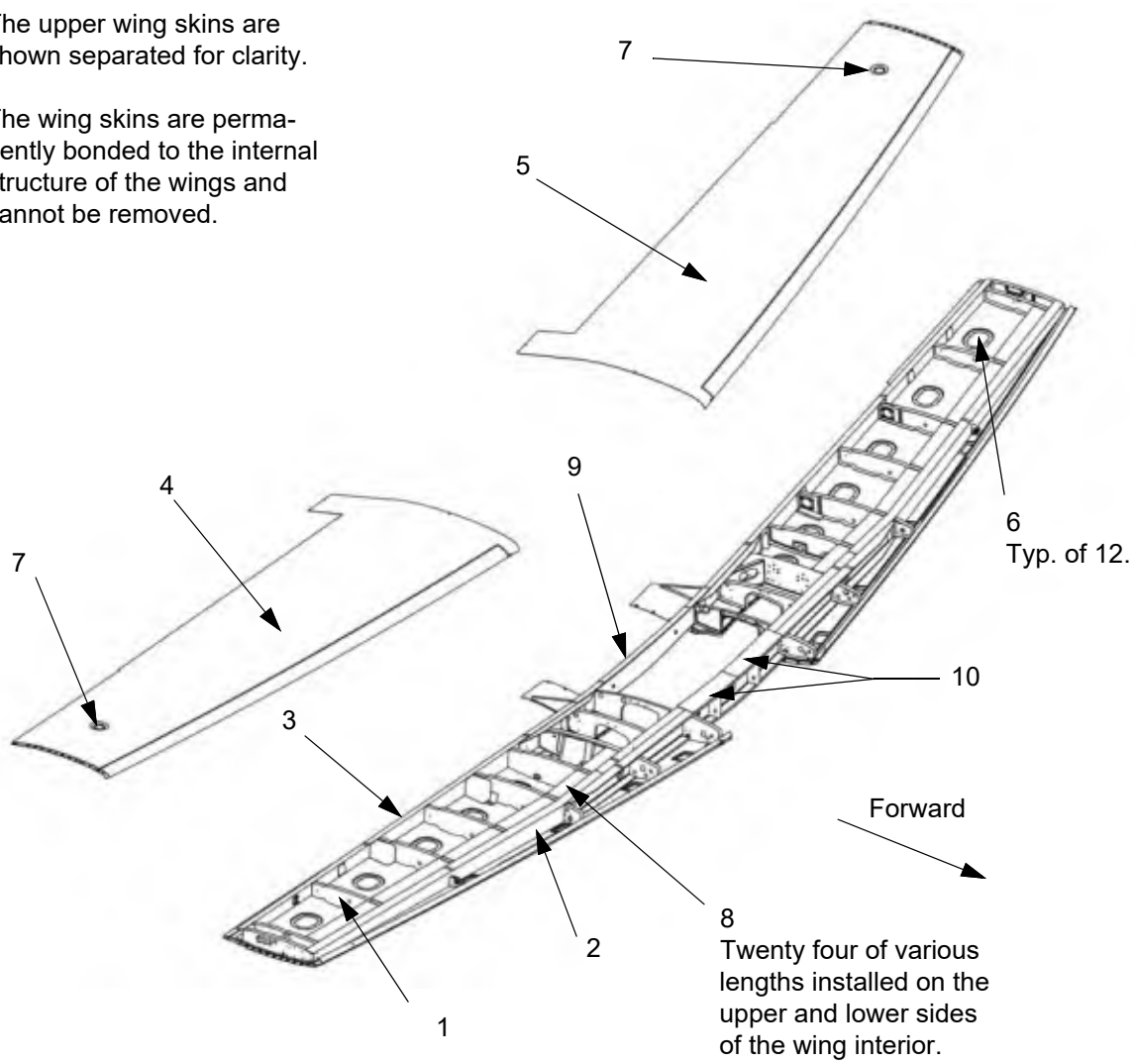

LEGEND

1. Rib
2. Forward Spar
3. Aft Spar
4. Right Upper Wing Skin
5. Left Upper Wing Skin
6. Fuel Bay Access
7. Fuel Filler Port
8. Peel Stop Strip
9. Aft Spar Doubler
10. Forward Spar Doubler

CENTER

1. Description

The center portion of the wings contain the flaps motor, rudder and elevator cables, cable pulleys, and hydraulic system reservoir and accumulator within the fuselage and spar box. Access to these airplane components is by removal of the wings belly panels and gear well liners. The four pins that attach the wings to the fuselage are also in this area of the airplane.

2. Maintenance Practices

A. Belly Panels

(1) Removal

(a) Remove the screws attaching the gear well liners to the gear well wing tunnels and the belly panels.

(b) Remove the left and right side gear well liners.

(c) Remove the screws attaching the belly panels to the wings and the keel beam.

(d) Carefully lower the belly panels then disconnect the marker beacon antenna.

(e) Remove the belly panels.

(2) Installation

(a) Connect the marker beacon antenna.

(b) Hold the belly panels in position then attach them using screws.

(c) Install the left and right side gear well liners.

Figure 57-10.1: Belly Panels

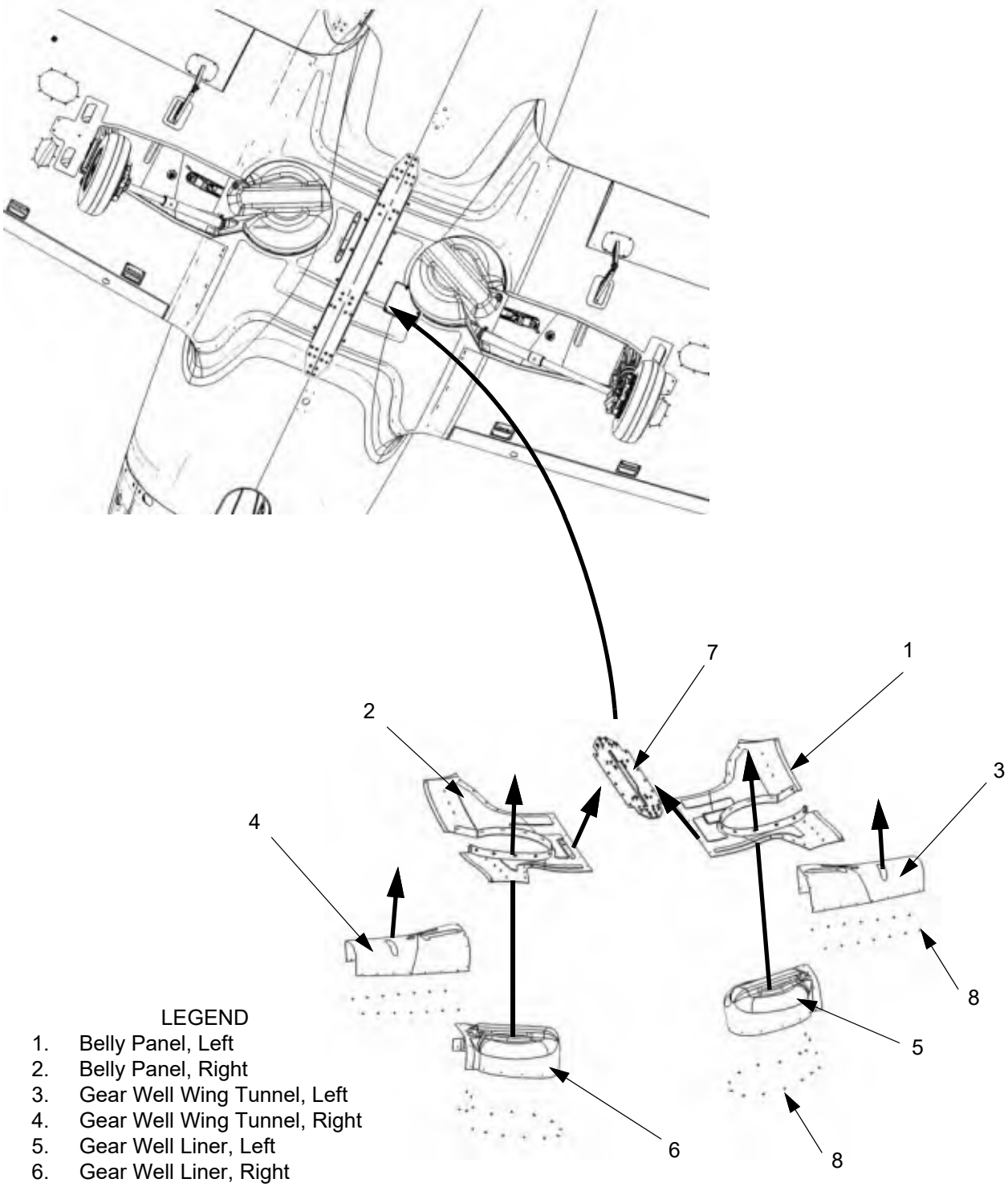

LEGEND

1. Belly Panel, Left
2. Belly Panel, Right
3. Gear Well Wing Tunnel, Left
4. Gear Well Wing Tunnel, Right
5. Gear Well Liner, Left
6. Gear Well Liner, Right
7. Keel Beam
8. Screw

B. Wings Pin Replacement - Every 22,000 Hours

Note: Replace one pin at a time. The order of replacement is unimportant.

(1) Remove the cowling (refer to Chapter 71-10).
(2) Defuel the wings (refer to Chapter 12).
(3) Remove the crew seats (refer to Chapter 25-10).
(4) Remove the crew carpet (refer to Chapter 25-10).
(5) Remove access panels 3LC, 3RC, 4LC, and 4RC (refer to Chapter 6).
(6) Remove the passenger cabin carpet and flooring (refer to Chapter 25-20 and 53-20).
(7) Lift and support the fuselage using lifting straps and hoists. Install one strap around the empennage just forward of the horizontal stabilizer. Install another strap around the two upper engine mounts just forward of the firewall (refer to Chapter 7-10).
(8) Raise the airplane to a height that lets the landing gear move freely (refer to Chapter 7-10).
(9) Remove the belly panels.
(10) Remove the gear well wing tunnel liners.
(11) Set the BATT 1 and BATT 2 switches to OFF.
(12) Disconnect external electrical power from the airplane (refer to Chapter 24-40).
(13) Disconnect the aircraft batteries by disconnecting the negative battery cables first then the positive battery cables.

WARNING: To reduce the possibility of personal injury and equipment damage, disconnect the negative battery cable before disconnecting the positive battery cable.

(14) Secure the rudder, flaps, and ailerons to keep them from moving.
(15) Support the wings using jack stands or sawhorses able to support a minimum of 1000 lbs total weight. Use locally fabricated cradles shaped to the contour of the wings to help support the load without damaging the wings. Put the wing supports underneath the LH and RH wing internal ribs at WS83 which is 4 inches outboard of the Jacking point.
(16) Remove the cotter pin from the wing pin.
(17) Remove the wing pin, washers, and castellated nut.

CAUTION: Do not force the pins if there is binding. Adjust the height of the wing supports to align the holes for pin removal.

(18) Lubricate the pin using Cor-Ban 27L corrosion inhibiting compound manufactured by Zip Chem Products, 400 Jarvis Dr., Morgan Hill, CA 95037, or approved equal.

(19) Install the pin using new washers, castellated nut, and cotter pin.

Note: It may be necessary to loosen the other pins to provide adequate play for removal and replacement of the pins.

(a) Torque the nut to 100 ft-lbs then continue to tighten until the next available castellation aligns. Do not exceed 250 ft-lbs torque**.**

Note: The grip range of shear pins shall extend completely through bushings in spar saddle. If necessary, use washers to align castellations within the torque range. NAS1149F1216P, NAS1149F1232P, or NAS1149F1290P washers may be used interchangeably for MS20002-12 washers beneath the nut only, to range the pin grip as required. Do not exceed 2 washers beneath the nut. Do not exceed 3 washers per bolted joint. Only one countersunk washer is permitted under the head of the pin.

(b) Repeat the above steps for the remaining wing pins.

(c) Connect the aircraft batteries starting with the positive battery cables then the negative cables.

WARNING: To reduce the possibility of personal injury and equipment damage, connect the positive battery cable before connecting the negative battery cable.

(d) Install the gear well wing tunnel liners.

(e) Install the belly panels.

(f) Install the passenger cabin flooring and carpet (refer to Chapter 53-20 and 25-20).

(g) Install access panels 3LC, 3RC, 4LC, and 4RC (refer to Chapter 6).

(h) Install the crew footwell carpet (refer to Chapter 25-10).

(i) install the crew seats (refer to Chapter 25-10).

(j) Remove the wing supports.

(k) Lower the airplane (refer to Chapter 7-10).

(l) Remove the lifting straps.

(m) Remove the restraints securing the ailerons, elevators, and rudder to let them move freely.

(n) Install the cowling (refer to Chapter 71-10).

C. Wing Pin Inspection - Every 2000 Hours

(1) Remove the belly panels.
(2) Remove the gear well wing tunnel liners.
(3) Remove the crew seats (refer to Chapter 25-10).
(4) Remove the crew carpet (refer to Chapter 25-10).
(5) Remove access panels 3LC, 3RC, 4LC, and 4RC (refer to Chapter 6-00).
(6) Remove the passenger cabin carpet and flooring (refer to Chapter 25-20 and 53-20).
(7) Visually inspect the pins, washers and castellated nuts for signs of motion or corrosion. Do not loosen or remove the pins unless replacement is required.
(8) Install the gear well wing tunnel liners.
(9) Install the belly panels.

Figure 57-10.2: Grounding Straps

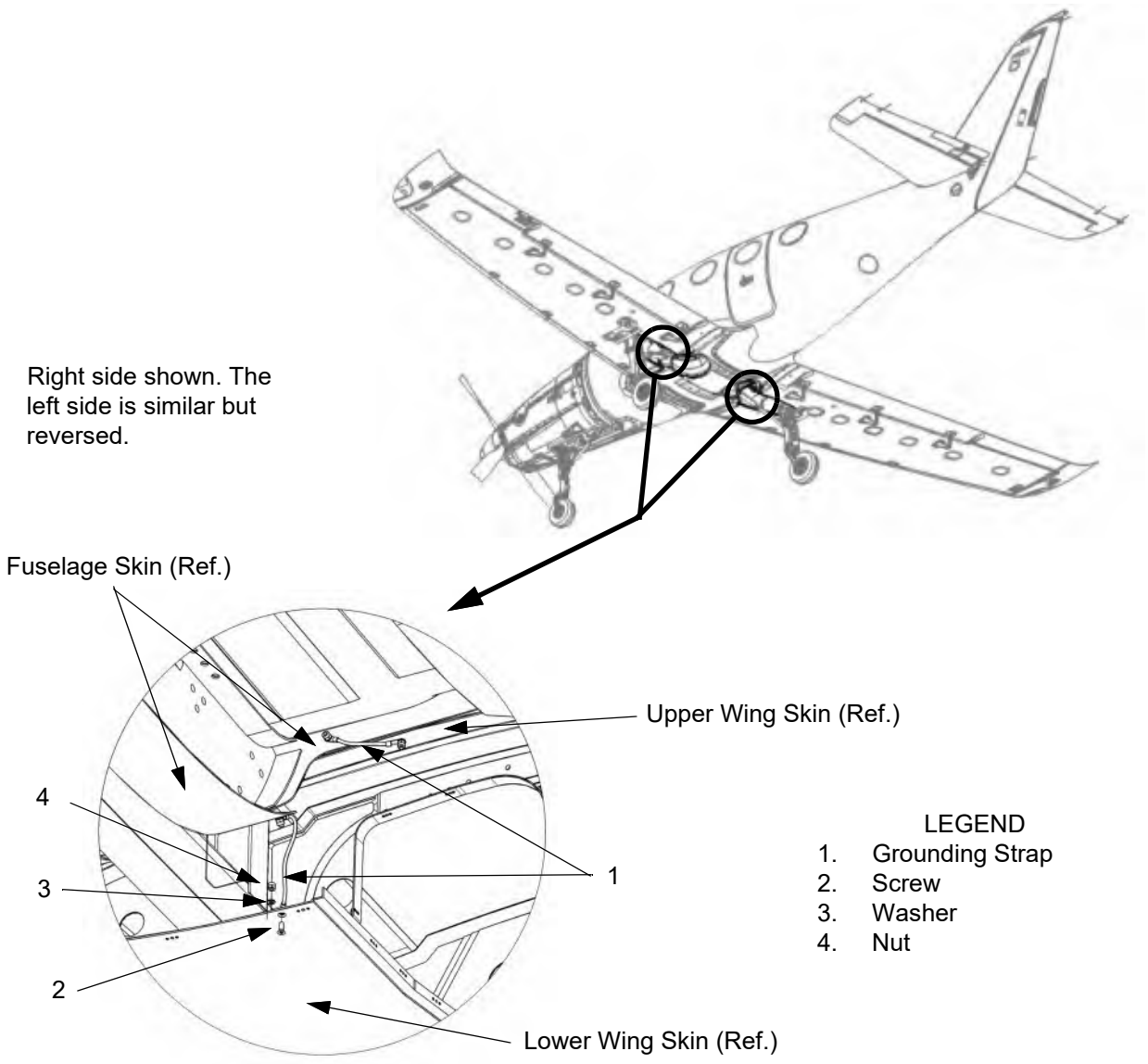

Figure 57-10.3: Wing Attachment

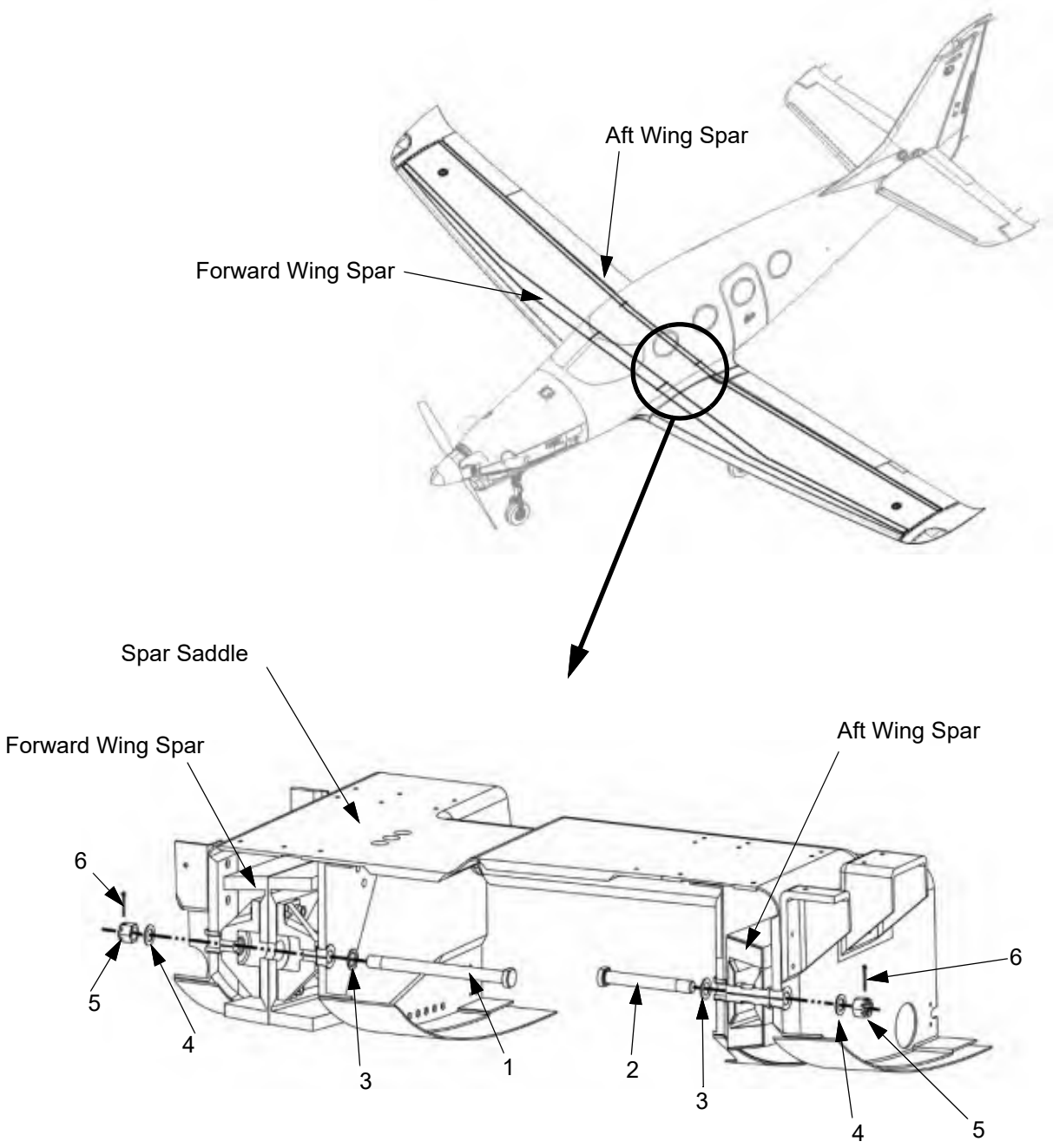

LEGEND

1. Forward Pin
2. Aft Pin
3. Countersunk Washer
4. Washer
5. Castellated Nut
6. Cotter Pin

The left side is shown.
The right side is similar.

WING TIP

1. Description

The wing tips are made of carbon fiber composite material ribs and skins. Each wing tip has a landing light and anti-collision/position light enclosed by a clear acrylic lens. On the underside of the wing tips, a NACA duct gives venting for the wet wing fuel tanks.

2. Maintenance Practices

A. Wing Tip (Without Radar Pod)

Removal and installation procedures for the left and right wing tips are similar.

(1) Removal

(a) Set the BATT 1 and BATT 2 switches to OFF.

(b) Disconnect external electrical power from the airplane (refer to Chapter 24-40).

CAUTION: Take note of the screw length as they are removed. Shorter screws may be used in the trailing edge for aileron travel clearance.

(c) Remove the screws that attach the wing tip to the wing.

(d) Slide the wing tip outboard enough to access the fuel vent hose fittings.

(e) Disconnect the fuel vent hoses from the wing tip.

(f) Bring the thin aft section of the wingtip down to clear the aileron push rod.

(g) Disconnect the landing light and the anti-collision/position light from the electrical harness.

(h) Disconnect the grounding strap from the aileron bellcrank.

(i) Remove the wing tip.

(2) Installation

(a) Put the wing tip in position next to the wing.

(b) Connect the electrical harness to the landing light and the anti-collision/position light.

(c) Connect the grounding strap to the aileron bellcrank

(d) Connect the fuel vent hoses to the fitting on the wing.

(e) Making sure the wing tip skin clears the aileron push rod, put the wing tip in position on the wing.

CAUTION: Make sure screws of the correct length(s) are used.

(f) Install the screws that attach the wing tip to the wing.

(g) Run the ailerons through their full travel and make sure the wing tip mounting screws don’t contact the aileron.

Figure 57-30.1: Wing Tip Installation

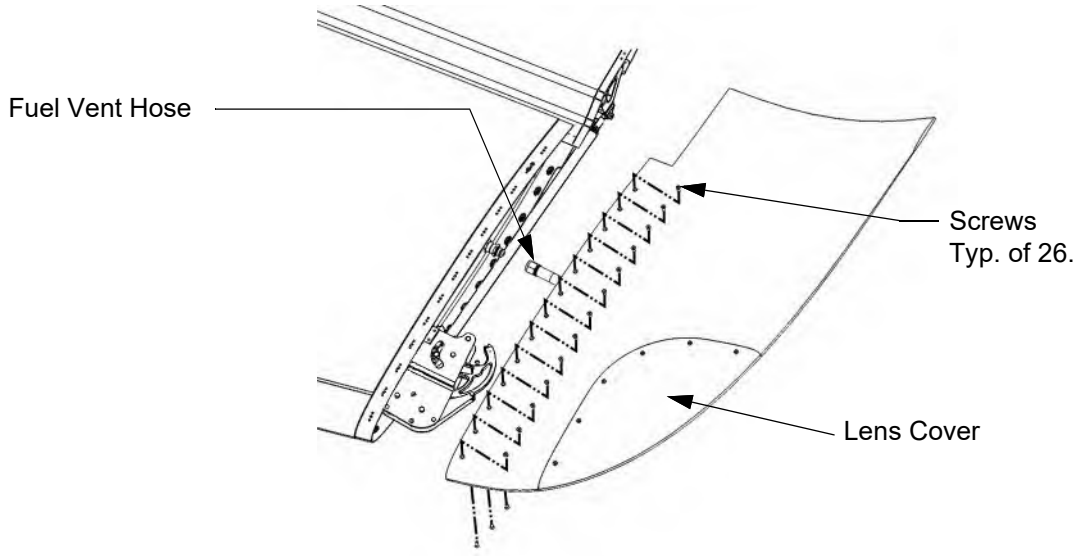

B. Wing Tip (With Weather Radar Pod)

(1) Removal

(a) Set the BATT 1 and BATT 2 switches to OFF.

(b) Disconnect external electrical power from the airplane (refer to Chapter 24-40).

CAUTION: Take note of the screw length as they are removed. Shorter screws may be used in the trailing edge for aileron travel clearance.

(c) Pull and collar the WEATHER RADAR circuit breaker.

(d) Pull and collar the L PITOT HEAT or R PITOT HEAT circuit breaker, as applicable.

(e) Carefully support the radome and remove the (6) screws that attach the radome to the radar pod. Remove the radome.

(f) Remove the (4) screws attaching the pitot tube panel mount to the wing then carefully lower the panel.

(g) Disconnect the pitot heat electrical harness from the pitot tube.

(h) Remove the pitot tube panel mount from the pitot tube.

(i) Remove (12) screws on the inboard radar pod fairing. Remove the fairing

(j) Disconnect the electrical connector from the bottom of the radar assembly.

(k) Disconnect cushion clamps as needed to allow wires and pitot lines to be free for removal.

(l) Remove the screws that attach the wing tip to the wing.

(m) Slide the wing tip outboard enough to access the fuel vent hose fittings.

(n) Disconnect the fuel vent hoses from the wing tip.

(o) Bring the thin aft section of the wingtip down to clear the aileron push rod.

(p) Disconnect the landing light and the anti-collision/position light from the electrical harness.

(q) Disconnect the grounding strap from the aileron bellcrank.

(r) Remove the wing tip.

(2) Installation

(a) Put the wing tip in position next to the wing.

(b) Connect the electrical harness to the landing light and the anti-collision/position light.

(c) Connect the grounding strap to the aileron bellcrank

(d) Connect the fuel vent hoses to the fitting on the wing.

(e) Making sure the wing tip skin clears the aileron push rod, put the wing tip in position on the wing.

CAUTION: Make sure screws of the correct length(s) are used.

(f) Install the screws that attach the wing tip to the wing.

(g) Run the ailerons through their full travel and make sure the wing tip mounting screws don't contact the aileron.

(h) Connect the ram air pitot line (blue) to the pitot passthrough plate.

(i) Install the pitot passthrough plate.

(j) Connect the electrical connector to the radar assembly.

Note: Before installing inboard fairing, route ram air pitot line and pitot heat harness to the approximate location for ease of install.

(k) Install inboard radar fairing with (12) screws.

(l) Connect the ram air pitot line and pitot heat harness to the pitot tube assembly.

(m) Carefully fit up the pitot tube assembly to the inboard fairing and install the (4) screws attaching the pitot tube panel mount to the wing.

(n) Put the radome in position on the radar pod. Install the (6) screws that attach the radome to the radar pod. Torque the screws to 20 - 25 in-lbs.

(o) Reset the WEATHER RADAR circuit breaker.

(p) Reset the L PITOT HEAT or R PITOT HEAT circuit breaker, as applicable.

(q) Perform the Operational Check of the weather radar. (refer to Chapter 34-40).

(r) If pitot lines were disconnected, Perform a pitot static system leak test (refer to Chapter 34-10).

(s) Check aileron droop and adjust as required (refer to Chapter 27-10).

Figure 57-30.2: Weather Radar Wing Tip Installation

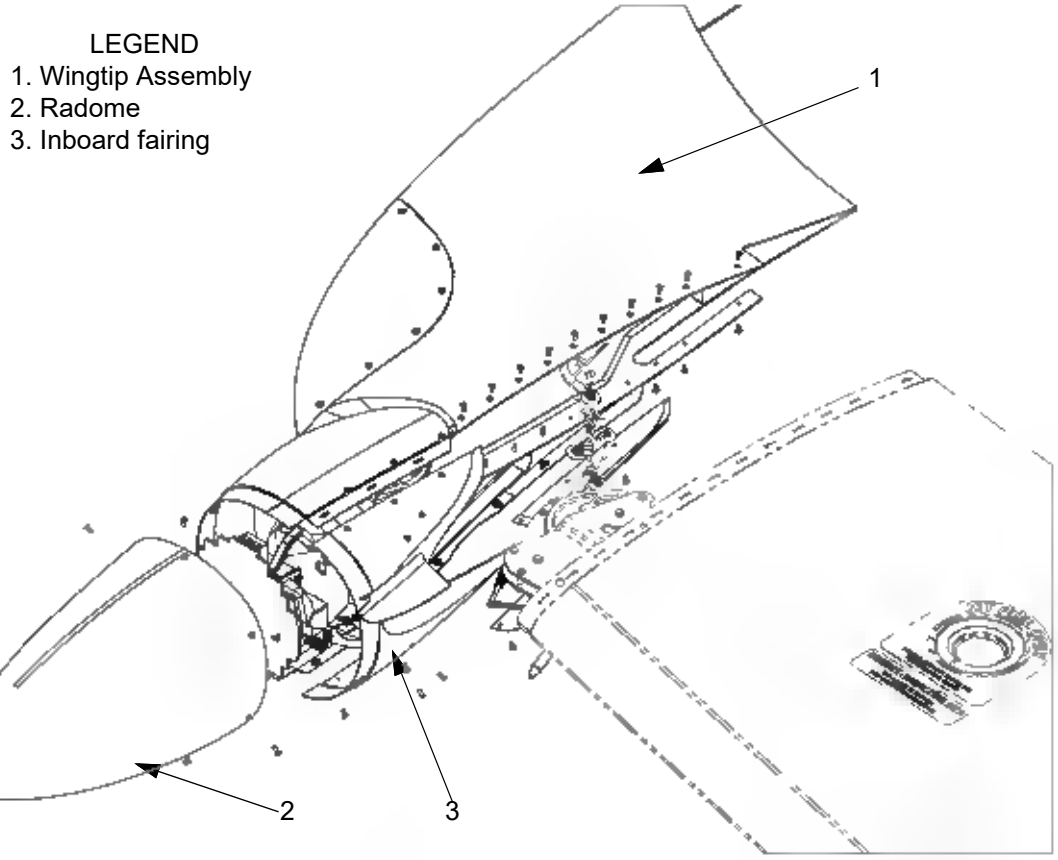

Figure 57-30.3: Weather Radar Inboard fairing Installation

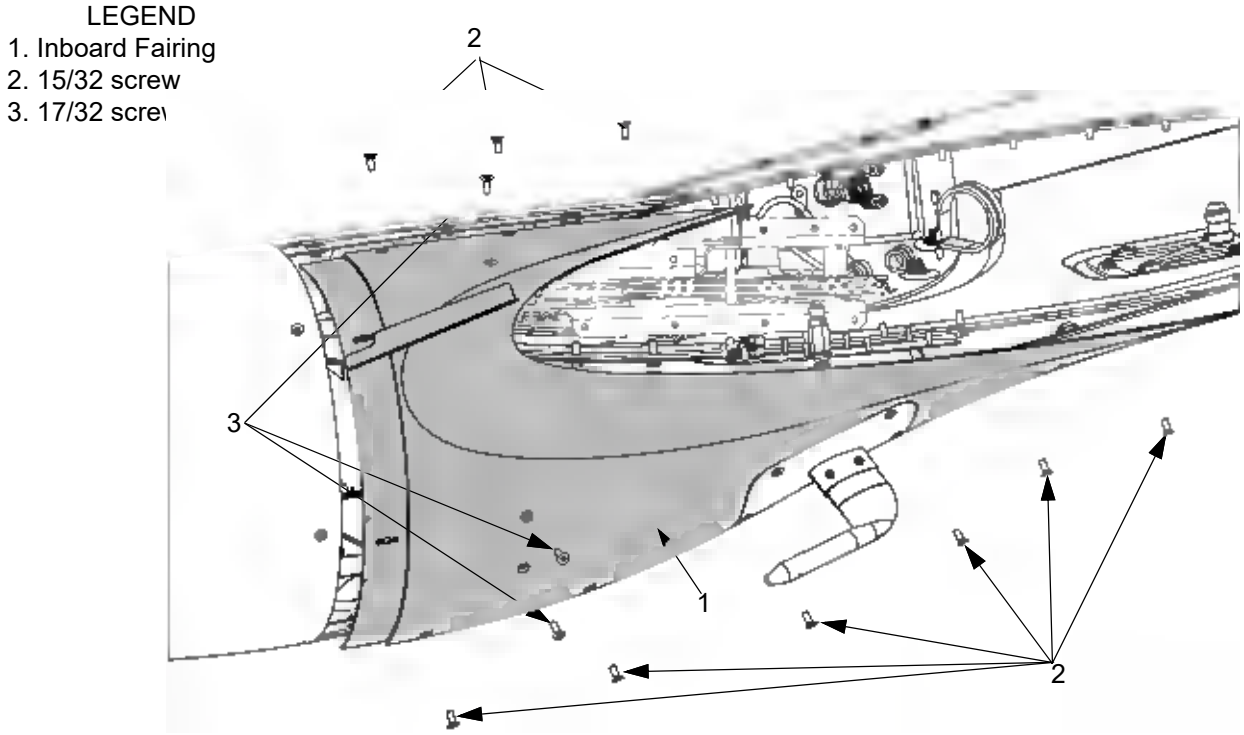

Figure 57-30.4: Weather Radar Pitot Routing

LEGEND
1. Pitot Tube Assembly
2. Pitot Passthrough Plate
3. Ram Air Pitot Line

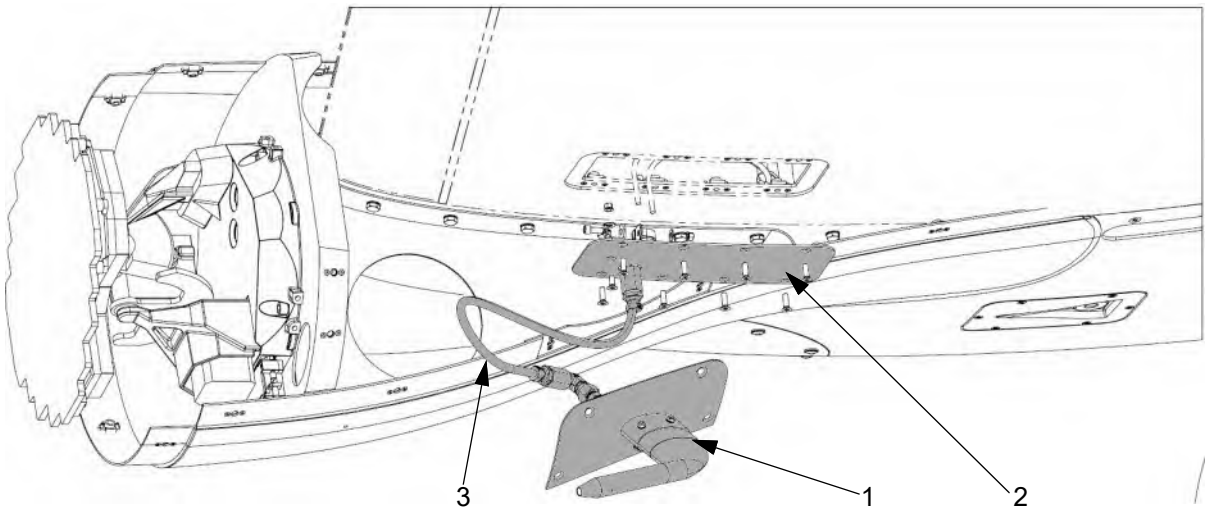

Inboard radar pod fairing not shown for clarity.

C. Forward Lightning Protection Bonding Jumper

Removal and installation of the right and left wing tip forward bonding jumpers is similar.

(1) Removal
   (a) Remove the wing tip.
   (b) Remove the aileron bellcrank.
   (c) Carefully drill out the four rivets attaching the two nutplates to the jumper and the wing.
   (d) Remove the locknuts, washers, and bolts securing the jumper to the forward wing spar.
   (e) Remove the jumper.

(2) Installation
   (a) Attach the jumper to the forward wing spar using bolts, washers, and locknuts.
   (b) Attach the nutplates to the jumper through the wing skin using rivets.
   (c) Install the bellcrank.
   (d) Install the wing tip.

D. Aft Lightning Protection Bonding Jumper

Removal and installation of the right and left wing tip aft bonding jumpers is similar.

This bonding jumper is made of two pieces. Removal of the piece riveted to the wing is not required unless that piece has been damaged.

(1) Removal

(a) Remove the wing tip.

(b) Remove the aileron (refer to Chapter 57-60).

(c) Remove the outboard aileron hinge.

(d) Remove the jumper.

(e) If the piece riveted to the wing skin requires removal, carefully drill out the four rivets attaching the two nutplates to the jumper and the wing then remove the jumper piece.

(2) Installation

(a) Hold the jumper against the aft wing spar then install the outboard aileron hinge.

(b) Install the riveted jumper piece if it has been removed. Attach the nutplates to the jumper piece through the wing skin using rivets.

(c) Install the bolts, washers, and locknuts attaching the jumper to the riveted jumper piece.

(d) Install the aileron (refer to Chapter 57-60).

(e) Install the wing tip.

Figure 57-30.5: Lightning Protection Bonding Jumpers

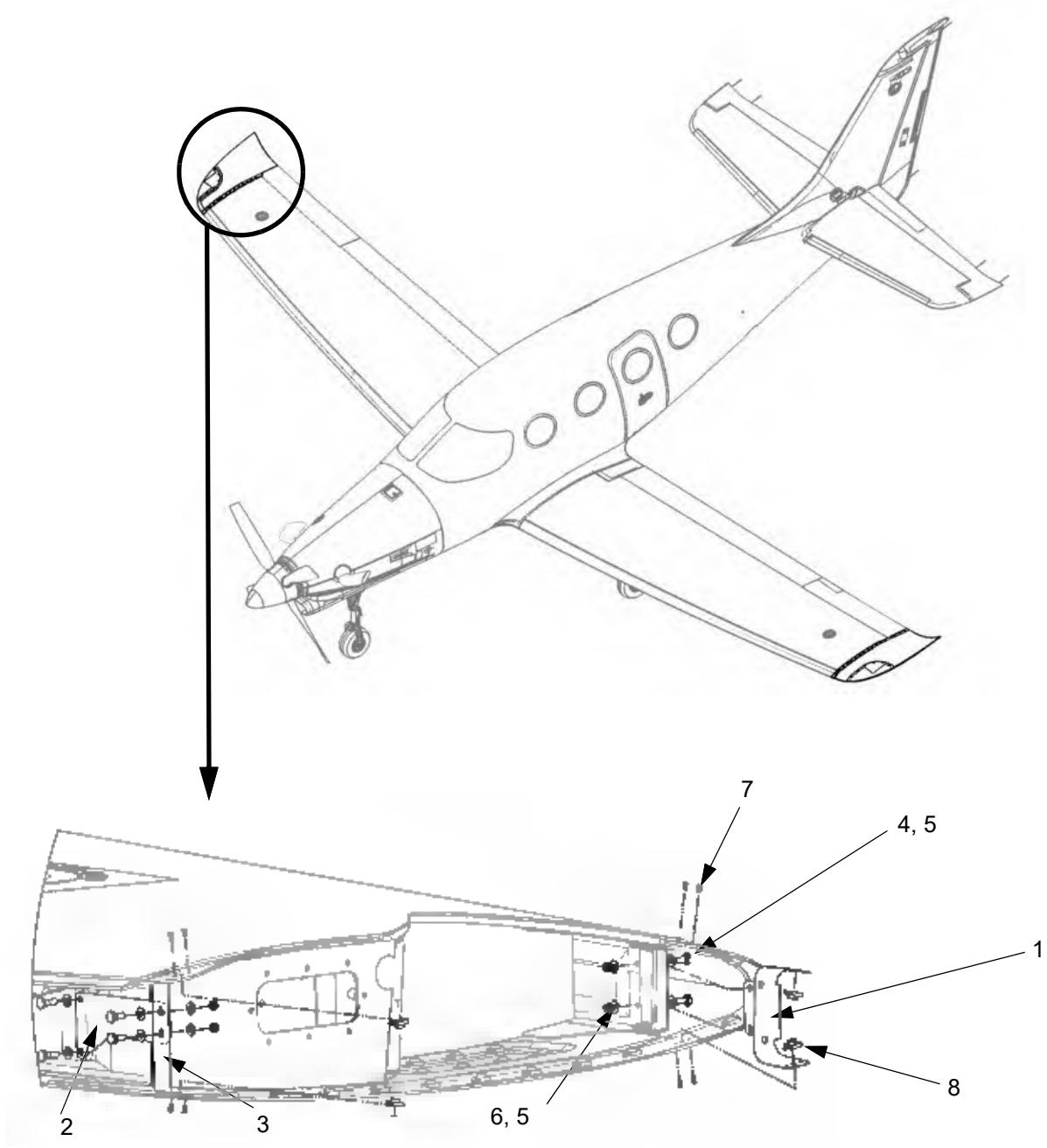

LEGEND

1. Forward Bonding Jumper
2. Aft Bonding Jumper, Piece 1
3. Aft Bonding Jumper, Piece 2
4. Bolt
5. Washer
6. Locknut
7. Rivet
8. Nutplate

The right wing is shown.
The left wing is similar.

The wing tip is not shown for clarity.



AIRFLOW MODIFICATION DEVICES

1. Description

This chapter gives information and procedures for the wings leading edge stall strips, leading edge turbulators and airflow turbulators in front of the ailerons, and the vortex generators on the underside of the wings.

WARNING: Flight with any of the stall strips, turbulators, or vortex generators missing or damaged is prohibited.

WARNING: Sealant around the six turbulators at each lift transducer must be properly installed with the proper fillet and no cracking. Any void between the turbulator and the wing especially at the point of the turbulator triangle causes the turbulator to be ineffective.

2. Maintenance Practices

A. Leading Edge Stall Strips

The leading edge stall strips are made of a neoprene compound extruded into a triangular strip approximately 6-5/8” long by 1” wide by 1/2” tall.

The stall strips are bonded to the leading edge de-ice boots using 3M EC1300L adhesive.

(1) Removal

(a) Protect painted surfaces of the airplane adjacent to the repair area.

(b) Carefully remove the bead of AC-251 B-1/2 sealant around the joint of the stall strip(s) and the de-ice boot, as necessary.

(c) Make index marks using an indelible marker to note the location of the stall strip(s) on the de-ice boot.

(d) Apply toluene to the top of the stall strip(s) and allow it to run down the sides to soften the bonding adhesive between the stall strip(s) and the de-ice boot.

(e) Wait approximately 10 seconds for the toluene to penetrate the bond.

(f) Carefully peel the stall strip(s) away from the de-ice boot.

(g) Remove the residual adhesive using toluene applied to a clean rag. Prevent solvent run-off to avoid damage to aircraft paint. Use the minimum amount of solvent and clean up any spills immediately.

(h) Use an alcohol wipe to remove all remaining adhesive residue from the stall strip(s) and the de-ice boot.

(2) Installation

Temporarily install the leading edge stall strip(s) then perform flight testing. Relocate the stall strip(s) as required. When the proper stall strip location has been found permanently install it.

(a) Mask the perimeter of the bond area using masking tape.

(b) Wipe the bonding surface of the de-ice boot and the stall strip(s) using one pass of an isopropyl alcohol wipe each.

(c) Attach the stall strip(s) to the de-ice boot using 3M foil tape 3340.

(d) Do flight testing to test the stall strip(s) in aerodynamic stall.

(e) Move the stall strip(s) as required within the location tolerances shown in the following figures.

(f) Use an alcohol wipe to remove all remaining residue from the boot and stall strip(s).

(g) Repeat the steps above until you get proper stall performance.

(h) Mark the location of the properly located stall strip(s).

(i) Hand scuff the bonding surface using a maroon (7447/8447) Scotch-Brite™ pad to remove surface gloss.

(j) Clean both bonding surfaces using isopropyl alcohol.

(k) Apply a thin coat of 3M EC1300L adhesive to the bonding surfaces of the de-ice boot and the stall strip(s).

(l) Apply a second coat of the adhesive to the bonding surfaces of the de-ice boot and the stall strip(s).

(m) Activate the 3M EC1300L adhesive on both bonding surfaces in approximately 4 inch increments using a brush dipped in toluene. No soak is required.

(n) Press the stall strip(s) firmly into place against the de-ice boot. Adhesion will occur almost instantly.

(o) After the stall strip(s) are attached, remove the masking tape then let the adhesive cure for a minimum of 24 hours.

(p) Finish the joints using a thin bead of AC-251 B-1/2 sealant.

B. Aileron Turbulators

The twenty aileron turbulators are located on top of each wing and forward of each aileron.

The aileron turbulators are made of aluminum extruded into a triangular strip 2” long by 0.303” wide by 0.152” tall.

The turbulators are bonded to the wing skin using Devcon Plastic Welder, Devcon Plastic Welder II, or Plexus MA 300 adhesive.

(1) Removal

(a) Make index marks using an indelible marker to note the location of the turbulator(s) on the aileron.

(b) Using a phenolic or hardwood razor carefully cut the adhesive while pulling up on the turbulator(s).

(c) Using a phenolic or hardwood scraper remove as much of the adhesive from the wing skin as possible.

CAUTION: Do not damage the composite material of the wing skin.

(2) Installation

(a) Outline the area to be bonded using masking tape.

(b) Hand scuff the bonding surface using a maroon (7447/8447) Scotch-Brite™ pad to remove surface gloss.

(c) Mix Devcon Plastic Welder, Devcon Plastic Welder II, or Plexus MA 300 adhesive (refer to the adhesive manufacturer’s instructions).

(d) Apply adhesive to the bonding surface of the wing skin and the turbulator(s) then push the turbulator(s) into place.

(e) Secure the turbulator(s) using masking tape.

(f) Cure the adhesive at ambient conditions for 20 minutes.

(g) Remove the masking tape.

(h) Touch up paint as necessary.

C. Leading Edge Turbulators

The leading edge turbulators are located on the underside of the leading edge of the wings. There are three turbulators on either side of the two lift transducers assemblies. The turbulators are placed differently on FIKI and non-FIKI aircraft, refer to Figure 57-10.1 Sheet 3.

The leading edge turbulators are made of a neoprene compound formed into a right triangular shape with a 1" hypotenuse and 0.707" opposite and adjacent sides. The turbulator is 0.155" ± 0.005" thick.

The turbulators are bonded to the leading edge de-ice boots using 3M EC1300L adhesive.

(1) Removal

(a) Protect painted surfaces of the airplane adjacent to the repair area.

(b) Carefully remove the bead of AC-251 B-1/2 sealant around the joint of the turbulator(s) and the de-ice boot, as necessary.

(c) Make index marks using an indelible marker to note the location of the turbulator(s) on the de-ice boot.

(d) Apply toluene to the top of the turbulator(s) and allow it to run down the sides to soften the bonding adhesive between the turbulator(s) and the de-ice boot.

(e) Wait approximately 10 seconds for the toluene to penetrate the bond.

(f) Carefully peel the turbulator(s) away from the de-ice boot.

(g) Remove the residual adhesive using toluene applied to a clean rag. Prevent solvent run-off to avoid damage to aircraft paint. Use the minimum amount of solvent and clean up any spills immediately.

(h) Use an alcohol wipe to remove all remaining adhesive residue from the turbulator(s) and the de-ice boot.

(2) Installation

Note: Make sure to confirm correct placement for turbulators before installation. FIKI and non-FIKI aircraft have different placement.

Clean the surface with isopropyl alcohol and temporarily install the leading edge turbulator with 3M foil tape then perform flight testing. Relocate the turbulator as required. When the proper turbulator location has been found, install the turbulator as follows:

(a) Mask the perimeter of the bond area using masking tape.

(b) Carefully and thoroughly prep only the adhesion surface of the de-ice boot and turbulator by Hand scuffing the bonding surface of the turbulator(s) using a maroon (7447/8447) Scotch-Brite™ pad to remove surface gloss.

(c) Remove all masking tape.

(d) Wipe the surface of the de-ice boot and the turbulator(s) using a clean surface of isopropyl alcohol wipes each pass.

(e) Apply new masking tape to the perimeter of the prepped bond area.

(f) Apply a single thin coat of 3M EC1300L adhesive to both bonding surfaces,

Note: Keep the bonding surfaces separated for the following step.

(g) Let the contact cement set up so that it is tacky to the touch, but does not transfer.

Note: If adhesive becomes too dry, it can be re-activated by repeating (f)-(g)

(h) Press the turbulator(s) to the de-ice boot surface firmly then hold for 5 seconds. The bond should happen immediately.

(i) (Remove the masking tape and any residual adhesive.

(j) Finish the bottom downward facing edges of the turbulator(s) between the turbulator(s) and wing leading edge with a thin bead of AC 251 B 1/2. Make a 0.020” ± 0.010”.

(k) Remove the masking tape and any residual sealant.

(l) Do flight testing of the turbulators in aerodynamic stall.

WARNING: Sealant around the six turbulators at each lift transducer must be properly installed with the proper fillet and no cracking. Any void between the turbulator and the wing especially at the point of the turbulator triangle causes the turbulator to be ineffective.

Figure 57-40.1: Stall Strips and Turbulators (Sheet 1 of 3)

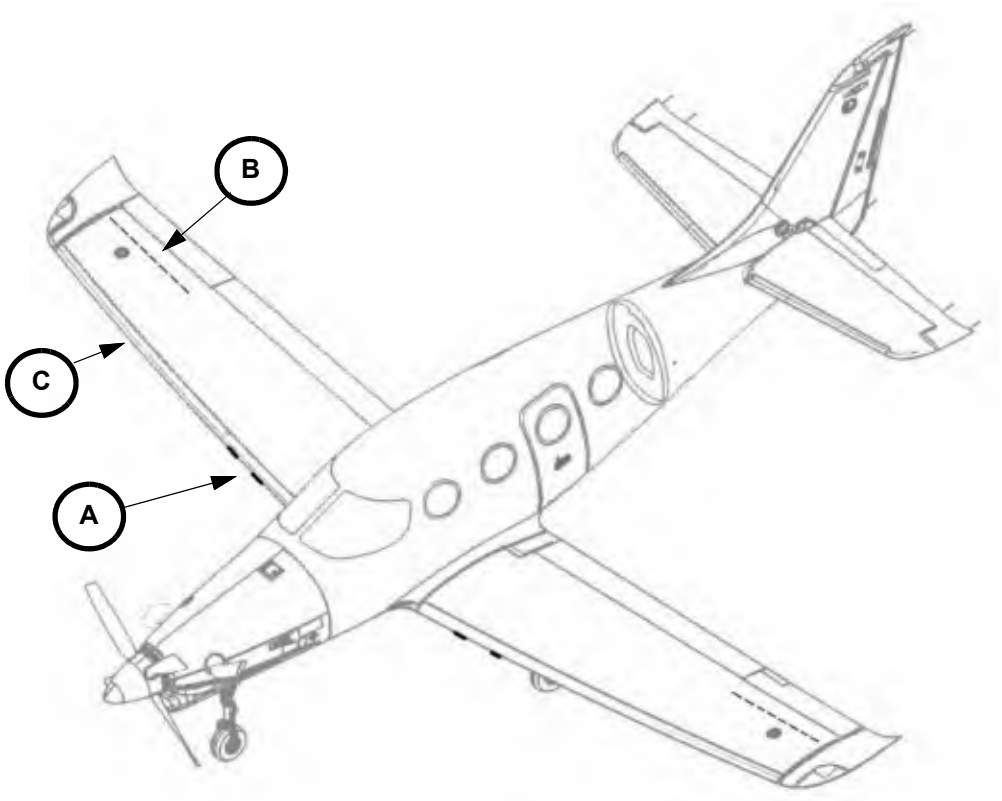

Right wing shown.
Left wing is similar.

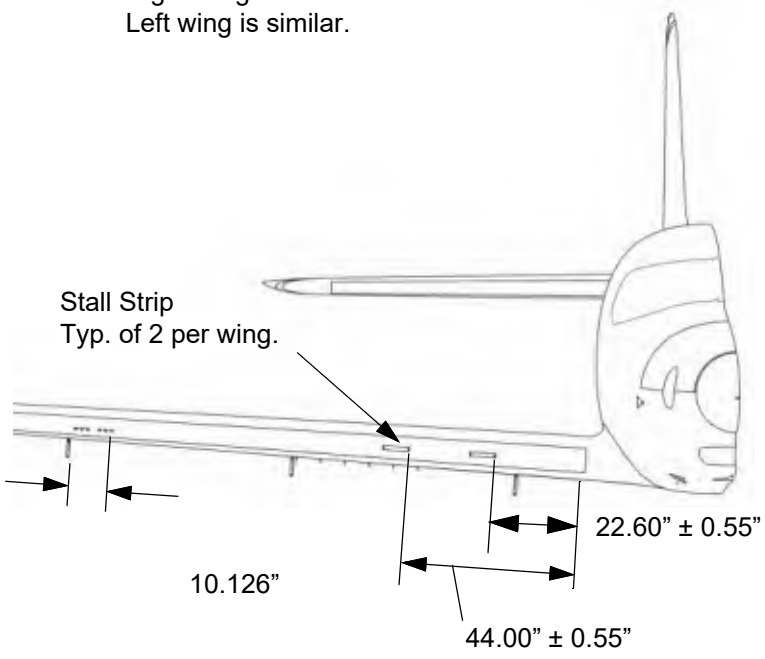

A

Figure 57-10.1: Stall Strips and Turbulators (Sheet 2 of 3)

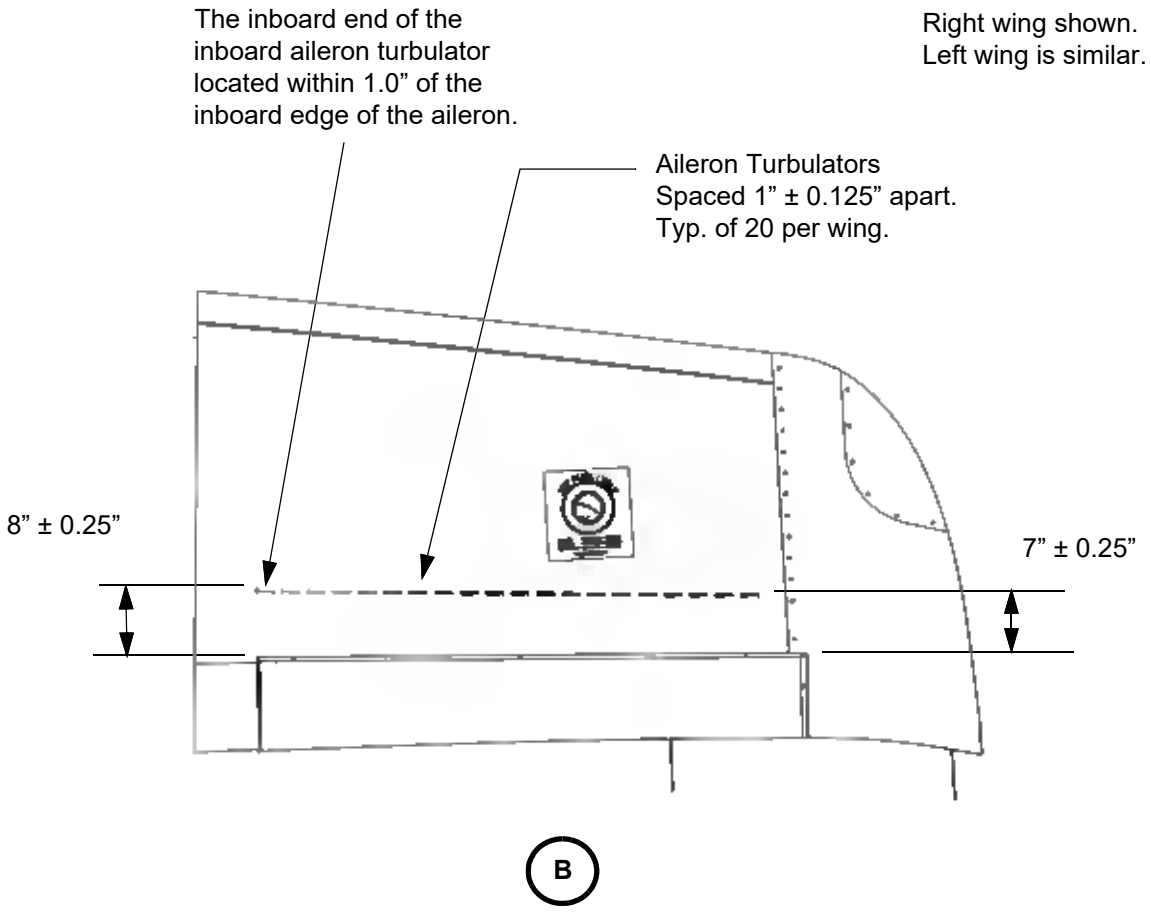

Figure 57-10.1: Stall Strips and Turbulators (Sheet 3 of 3)

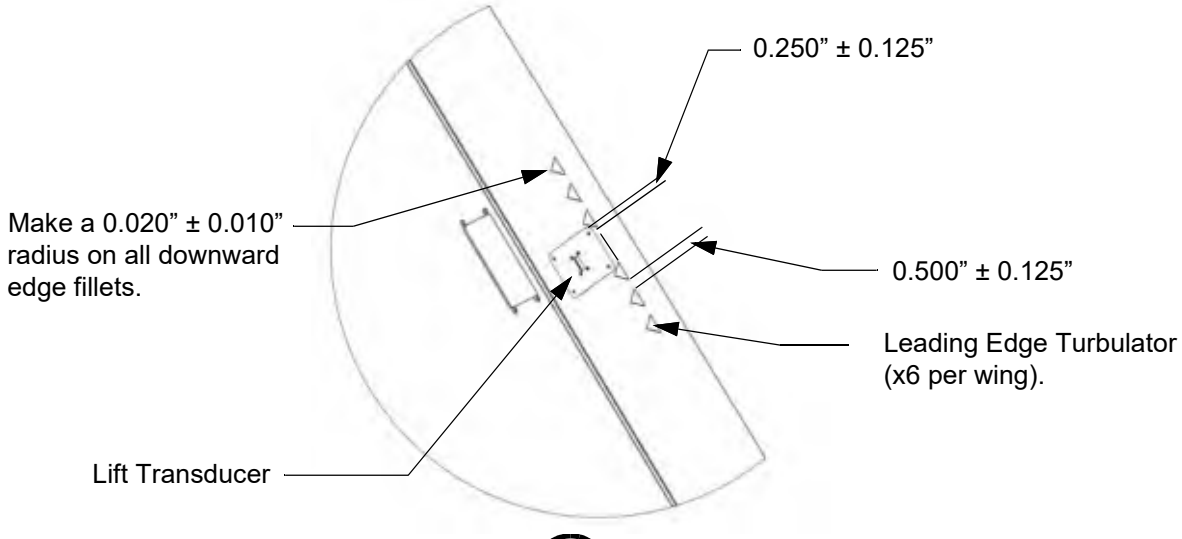

C1

(K003-K055 without SB-0035)

Right wing shown, left wing opposite.
View looking up.

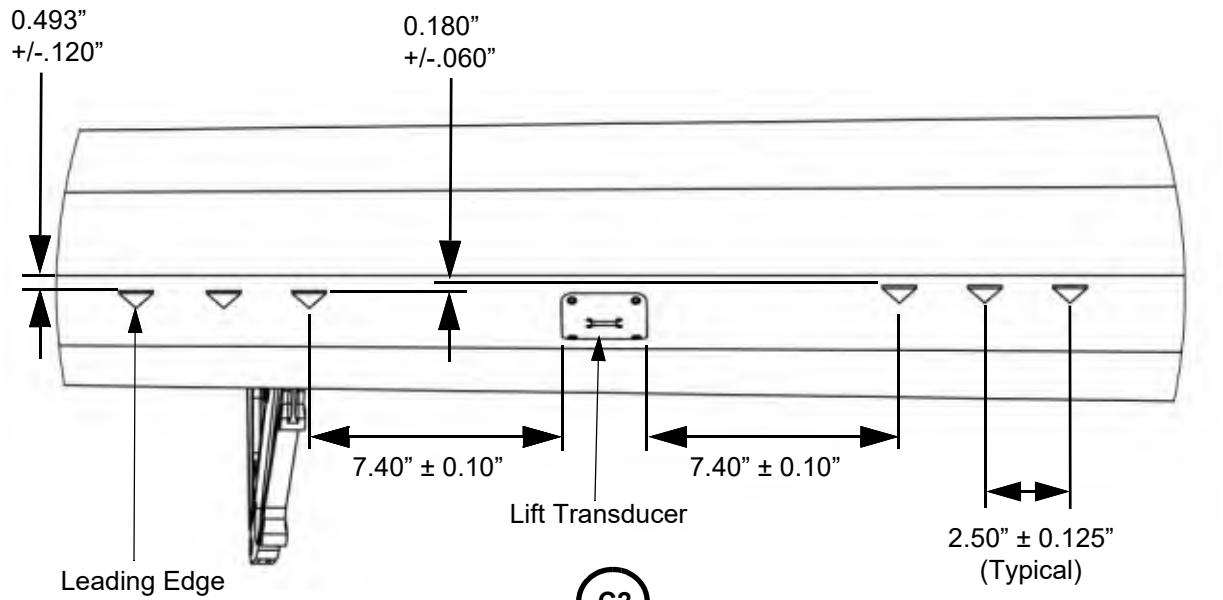

C2

(K056 and On, K003-K055 with SB-0035)

Right wing shown, left wing opposite.
View looking aft.

D. Vortex Generators

The vortex generators are made of an aluminum sheet formed into an angle approximately 3" long by 1" wide by 1" tall.

The vortex generators are bonded to the underside of the wings using 3M VHB tape 4941 double sided tape.

(1) Removal

(a) Using a phenolic or hardwood razor carefully cut the RTV sealant then the double stick tape while pulling down on the vortex generator.

(b) Using a phenolic or hardwood scraper remove as much of the RTV and double stick tape from the wing skin as possible.

CAUTION: Do not damage the composite material of the wing skin.

(2) Installation

(a) Clean the bonding surface of the wing skin and the vortex generator using isopropyl alcohol and a clean lint free cloth. Wait 15 minutes for the isopropyl alcohol to flash dry.

(b) Apply 3M VHB tape 4941 double stick tape to the bonding surface of the vortex generator then push the vortex generator into place.

(c) Seal the joint between the vortex generator and the wing skin using a bead of RTV sealant.

Figure 57-40.2: Vortex Generators (Sheet 1 of 2)

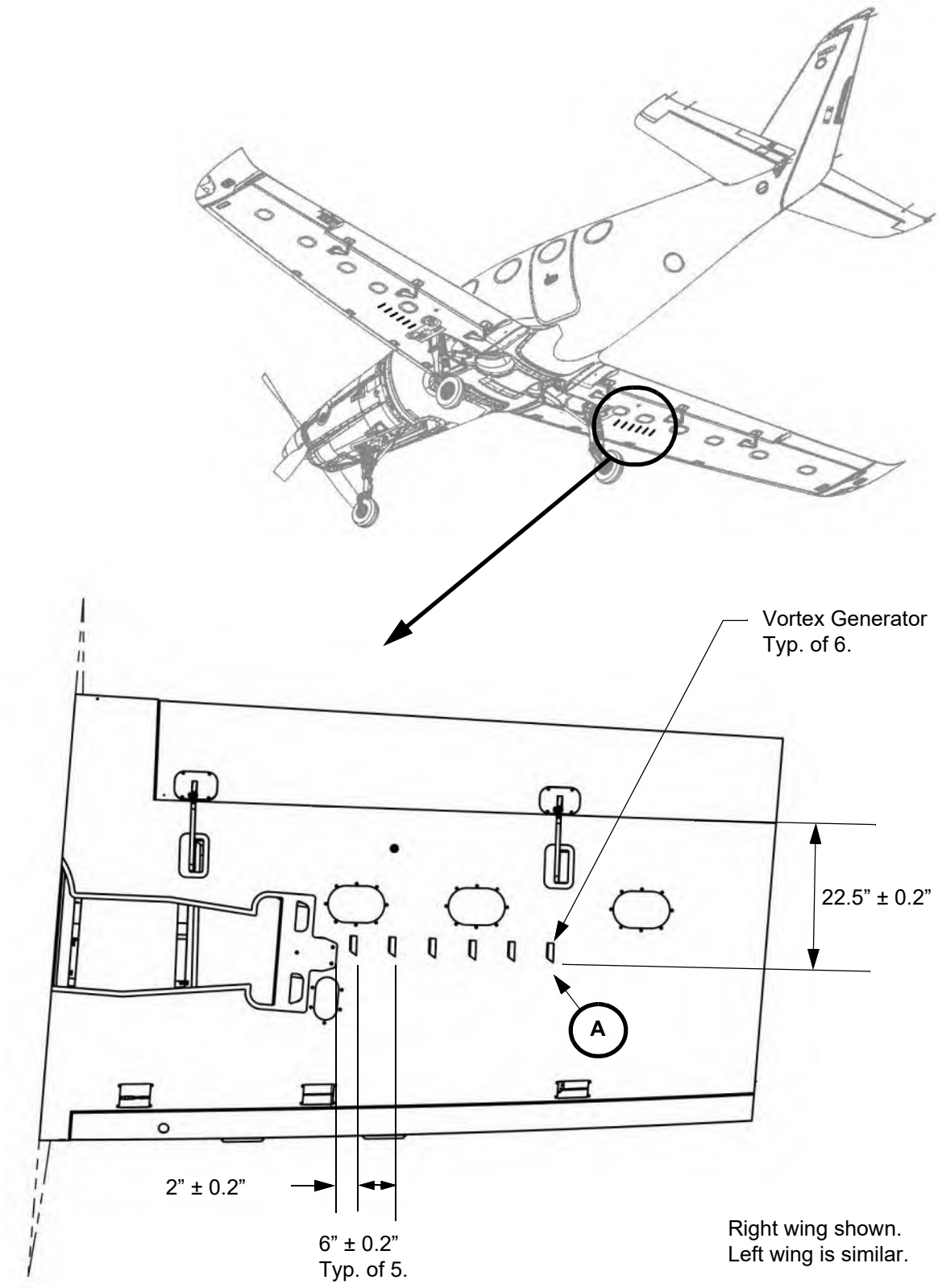

Figure 57-10.2: Vortex Generators (Sheet 2 of 2)

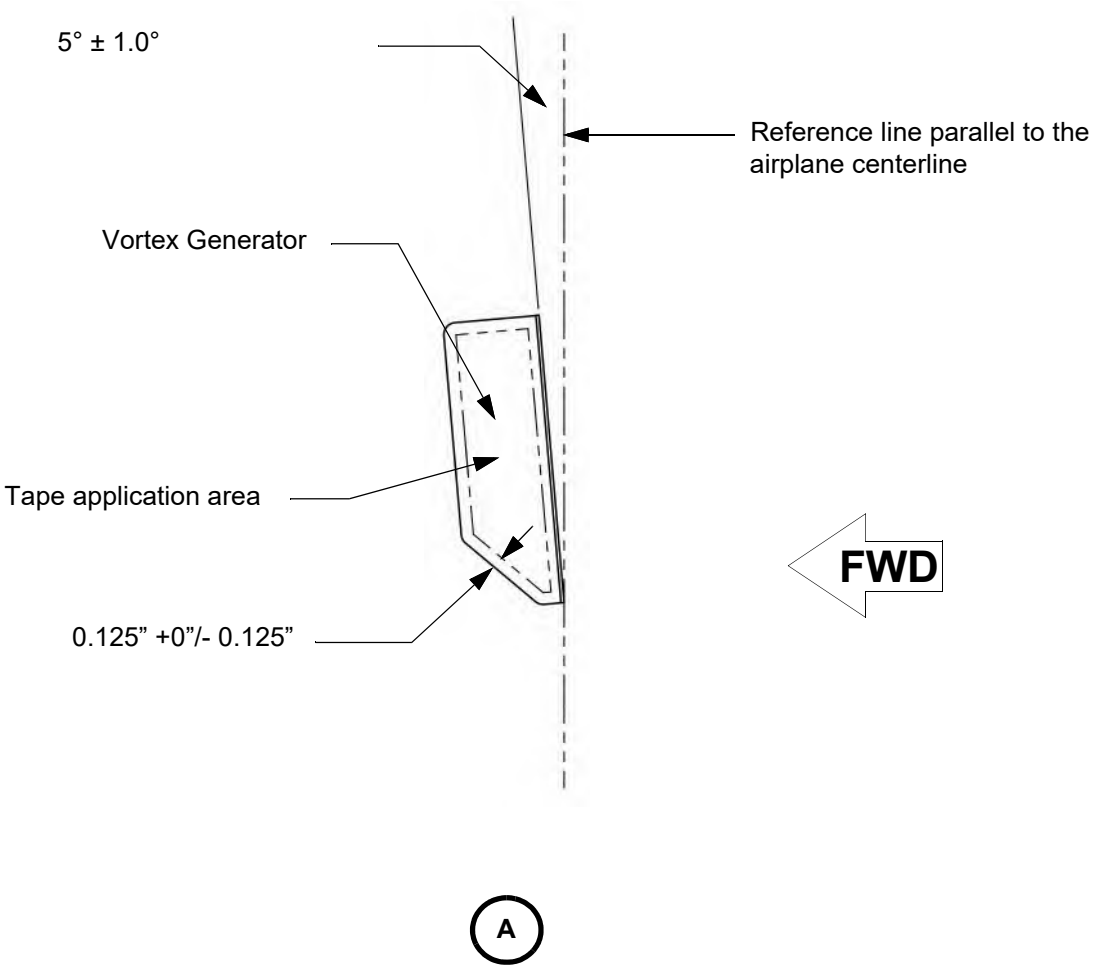

E. Flight Testing

Use the following procedures and information to ensure stall strips and leading edge turbulators are properly located.

(1) Testing Weight and Balance

Do testing of the airplane within a target weight of ±5% for LT/FWD, HVY/FWD, HVY/AFT and +10% to -5% for LT/AFT and within 7% of the total range for the target CG.

Figure 57-40.3: Test Envelope

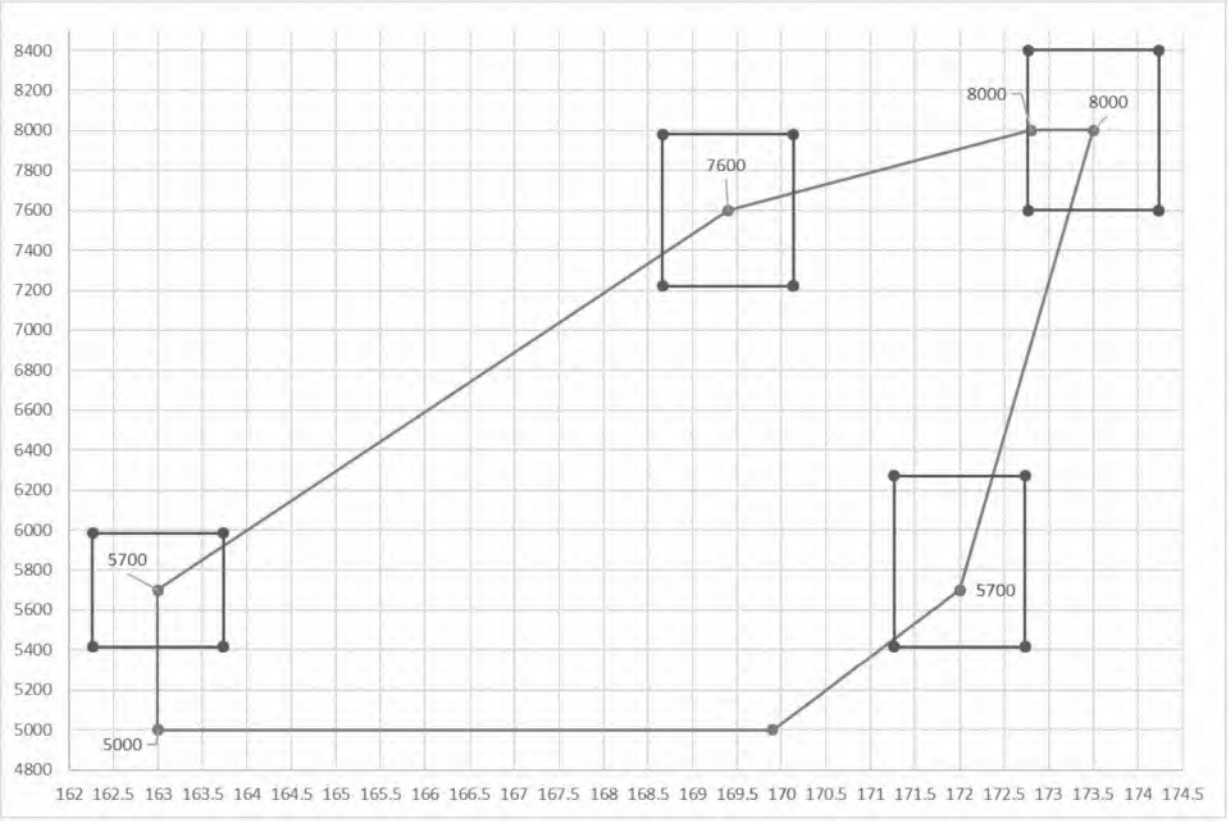

Table 57-40.1: Weight and Balance Matrix

	Standard Tolerance		CG Tolerance	
Target	Minimum Weight (lbs)	Maximum Weight (lbs)	Minimum CG (in)	Maximum CG (in)
LT/FWD	5415	5985	162.3	163.7
HVY/FWD	7220	7980	168.7	170.1
HVY/AFT	7600	8400	172.8	174.2
LT/AFT	5415	6270	171.3	172.7

Boxes at the envelope corners identify LT/FWD, HVY/FWD, LT/AFT, and HVY/AFT which are the most common weight and balance targets. Use the LT/FWD criteria for test points requiring the MOST FWD loading. Use the HVY/AFT criteria for test points requiring the MOST AFT loading.

(2) Stalling Speed Testing (14 CFR 23.49)

Use V_{S0} and V_{S1} as the stalling speeds or the minimum steady flight speeds in knots (KCAS) at which the airplane is controllable with the engine idling and throttle closed, the propeller in the feather position, the airplane in the condition existing in the test in which V_{SO} and V_{S1} are being used, and a weight and balance of HVY/FWD.

Determine V_{S0} and V_{S1} by flight tests using the procedure and meeting the flight characteristics specified in §23.201 with the exception that a feathered propeller be used to generate zero thrust.

Note: Stalling speed must be less than or equal to 66 KCAS.

(a) Pull the Pusher circuit breaker or the SPS CMP 1A, SPS CMP 1B, SPS CMP 2A, and SPS CMP 2B circuit breakers.

(b) Trim the airplane to 1.5 V_S.

(c) Set zero thrust.

(d) Reduce airspeed at a rate of one knot per second.

(e) Record the stall speed.

(3) Wings Level Stall Testing (14 CFR 23.201)

Show that it is possible to produce and correct roll by unreversed use of the rolling control and to produce and correct yaw by unreversed use of the directional control up to the time the airplane stalls.

Demonstrate the wings level stall characteristics from a speed at least 10 knots above the stall speed by pulling the elevator control back so that the rate of speed reduction will not exceed one knot per second until a stall is produced.

Measure degrees of roll to identify the nature of the stall regardless of certifiable limits during the entry into and the recovery from the maneuver with normal use of controls to minimize roll.

Show compliance with the requirements of this section with wing flaps UP, TO, and FULL, and with landing gear UP for flaps UP and TO and landing gear down for flap FULL settings. Perform stalls with power off.

Trim for each test at 1.5 V_{S1} or the minimum trim speed, whichever is higher.

Have the propeller at full RPM for the power off condition.

Show that it is possible to effect a smooth transition from a flying condition up to the stalled flight condition and return without requiring an exceptional degree of skill, alertness, or strength.

Flight tests must show that the airplane can be stalled and flight control recovered with normal use of the controls.

Test stalls with gear and flaps retracted up to 34000’.

Test stalls with gear and/or flaps extended up to 13000’.

For IDLE stalls, place the propeller lever in the full rpm position (full forward).

Note: The following requirements must be met:

Stick force positive up to stall.
Roll and yaw correctable with unreversed use of controls.
Roll of during recovery less than or equal to 15°.
Yaw during recovery less than or equal to 5°.

(a) Pull the Pusher circuit breaker or the SPS CMP 1A, SPS CMP 1B, SPS CMP 2A, and SPS CMP 2B circuit breakers.

(b) Trim the airplane to 1.5 V_S.

(c) Reduce airspeed at a rate of one knot per second.

(d) Record:

i) stick force curve positive up to stall,

ii) roll and Yaw correctable with unreversed use of controls,

iii) amount of roll encountered during recovery,

iv) amount of yaw encountered during recovery, and

v) KIAS at stall.

(4) Stalling Speed (14 CFR 23.49) Stall Barrier

Use V_{SO} and V_{S1} as the stalling speeds or the minimum steady flight speeds in knots (CAS) at which the airplane is controllable with the engine idling and throttle closed, the propeller in the takeoff position, the airplane in the condition existing in the test in which V_{SO} and V_{S1} are being used with a weight and balance of HVY/FWD.

Define stall by the downward pitching motion resulting from the activation of the stick pusher.

Determine V_{S0} and V_{S1} by flight tests using the procedure in 14 CFR 23.49.

Note: The following requirements must be met:

Push Activation

VS1 + 5 KCAS for flaps UP and TO

VS0 + 2 KCAS for flaps FULL

Shake Activation

At least + 5 KCAS from push activation

(a) Trim the airplane to 1.5 Vs.

(b) Reduce airspeed at a rate of one knot per second.

(c) Record stall speed downward pitching motion resulting from the activation of the stick pusher.

F. Flight Test Cards

Figure 57-40.1: Flight Deck Card 23.49 (Natural Stall)

14 CFR	TITLE	RISK	WT / CG	RIGGING	ALT
23.49	Stalling speed	MED	HVY / FWD	Opt	LOW

PROCEDURES:	23.49 (a)(2)(3)(4)(5)(6)(b)(c)(1)
Trim aircraft to 1.5 Vs. Set zero thrust. Reduce airspeed at a rate of one knot per second. Record: 1) stall speed	
Requirements:	
DN / FULL/ IDLE Stalling speed ≤66 KCAS	

RESULTS:			**FLIGHT #**
Gr / Flp / Pwr	Trim KIAS 1.5 V_S	KIAS at stall	Flight # / Comments
DN / FULL / IDLE			
DN / FULL / IDLE			
DN / FULL / IDLE			
UP / TO / IDLE			
UP / TO / IDLE			
UP / TO / IDLE			
UP / UP / IDLE			
UP / UP / IDLE			
UP / UP / IDLE			

Figure 57-40.2: Flight Deck Card 23.201 (Natural Stalls)

14 CFR	TITLE	RISK	WT / CG	RIGGING	ALT
23.201	Wings level stall	MED	LT / AFT HVY / AFT	Opt	LOW HIGH

PROCEDURES:	23.201 (a)(b)(c)(d)(f)(1)(2)(3)(4)(5)(i)(ii)(6)(7) 23.207 (a)(b)(c) / 23.691 (a)(b)(c)
Trim aircraft to 1.5 Vs. Reduce airspeed at a rate of one knot per second. Record: 1) stick force curve positive up to stall; 2) roll and yaw correctable with unreversed use of controls; 3) amount of roll encountered during recovery; 4) amount of yaw encountered during recovery; 5) KIAS at stall. For IDLE stalls, place the propeller lever in the full RPM position (full forward).	
Requirements:	
Stick force positive up to stall Roll and Yaw correctable with unreversed use of controls Roll off during recovery ≤15° Yaw during recovery less ≤15°	

RESULTS:					**FLIGHT #**			
Gr / Flp / Pwr	Trim 1.5 V_{S1}	Stall warn.	+ stick force	No cont rev?	Roll (deg)	Yaw (deg)	KIAS at stall	Flight # / Comments
UP / UP / IDLE								
UP / TO /IDLE								[1]
DN /FULL /IDLE								[1]
					[1] UP TO THE MAXIMUM TAKEOFF AND LANDING ALTITUDE ONLY			

Figure 57-40.3: Flight Deck Card 23.49 (Stall Barrier)

14 CFR	TITLE	RISK	WT / CG	RIGGING	ALT
23.49	Stalling speed	MED	HVY / FWD	OPT	LOW

PROCEDURES:	23.49 (a)(2)(3)(4)(5)(6)(b)(c)(1)
Trim aircraft to 1.5 Vs. Reduce airspeed at a rate of one knot per second. Record: 1) stall speed (downward pitching motion resulting from the activation of the stick pusher).	
Requirements:	
Push activation V_{S1}+5 KCAS for flaps UP and TO, V_{S0}+2 KCAS for flaps LND Shake activation +5 KCAS from push activation	

RESULTS:				**FLIGHT #**
Gr / Flp / Pwr	Trim KIAS 1.5 V_S	KIAS at Shake	KIAS at stall	Flight # / Comments
DN / FULL / IDLE				
DN / FULL / IDLE				
DN / FULL / IDLE				
UP / TO / IDLE				
UP / TO / IDLE				
UP / TO / IDLE				
UP / UP / IDLE				
UP / UP / IDLE				
UP / UP / IDLE				

FLAPS

1. Description

The flaps are made of carbon fiber composite material spars, ribs, and skins.

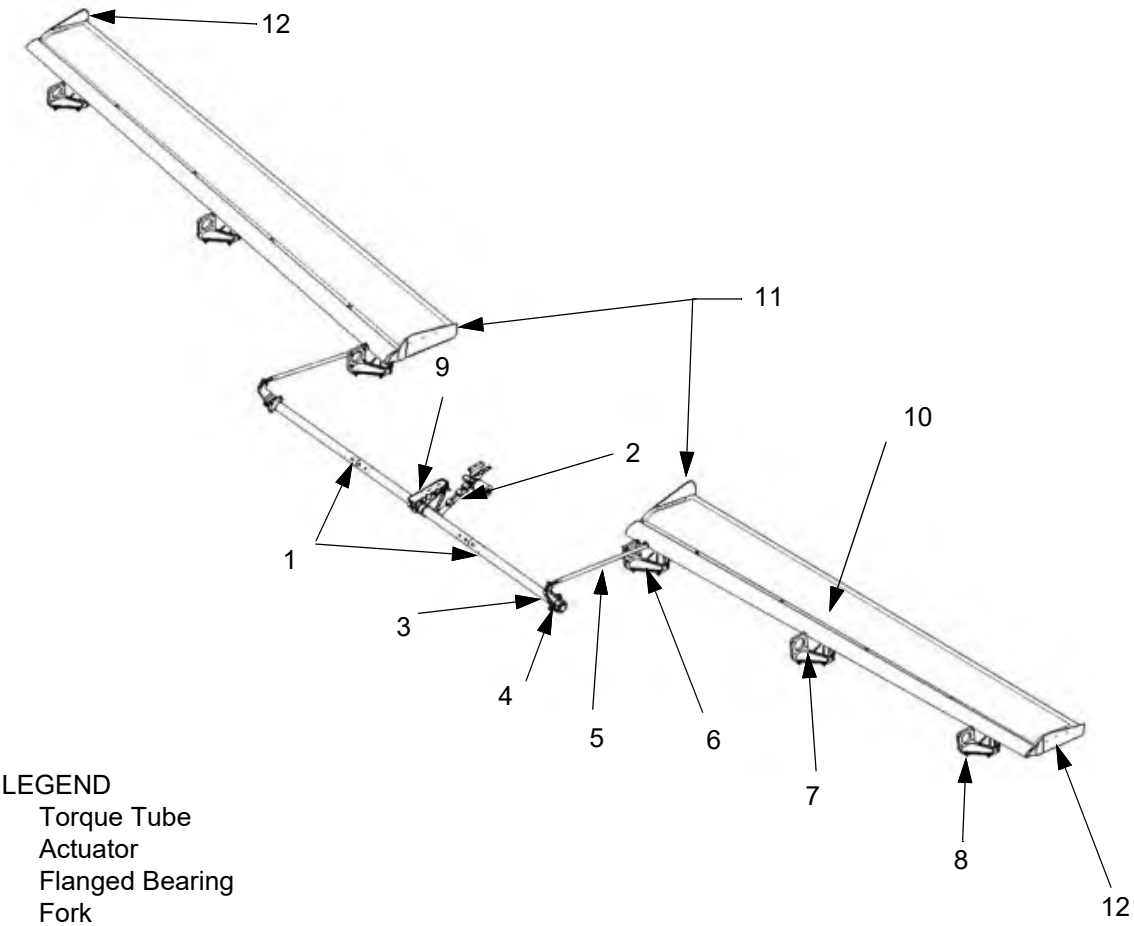

LEGEND

1. Torque Tube
2. Actuator
3. Flanged Bearing
4. Fork
5. Push Pull Rod
6. Inboard Hinge
7. Middle Hinge
8. Outboard Hinge
9. Attachment Bracket
10. Flap
11. Fence, Inboard
12. Fence, Outboard

2. Maintenance Practices

A. Flap Assembly

Removal and installation procedures for the left and right flaps are similar.

(1) Removal

(a) Work on the airplane in a controlled environment. Clear the flaps of obstacles, tools, and personnel.

(b) Connect a ground power unit to the airplane (refer to Chapter 24-40).

(c) Set the BATT 1 and BATT 2 switches to ON.

(d) Set the flaps controller to the landing position to fully extend the flaps.

(e) Set the BATT 1 and BATT 2 switches to off.

(f) Pull the FLAPS circuit breaker.

(g) Remove the cotter pin, nut, bolt, and washers to disconnect the aft end of the push pull rod. Tag or index the rod for re-installation.

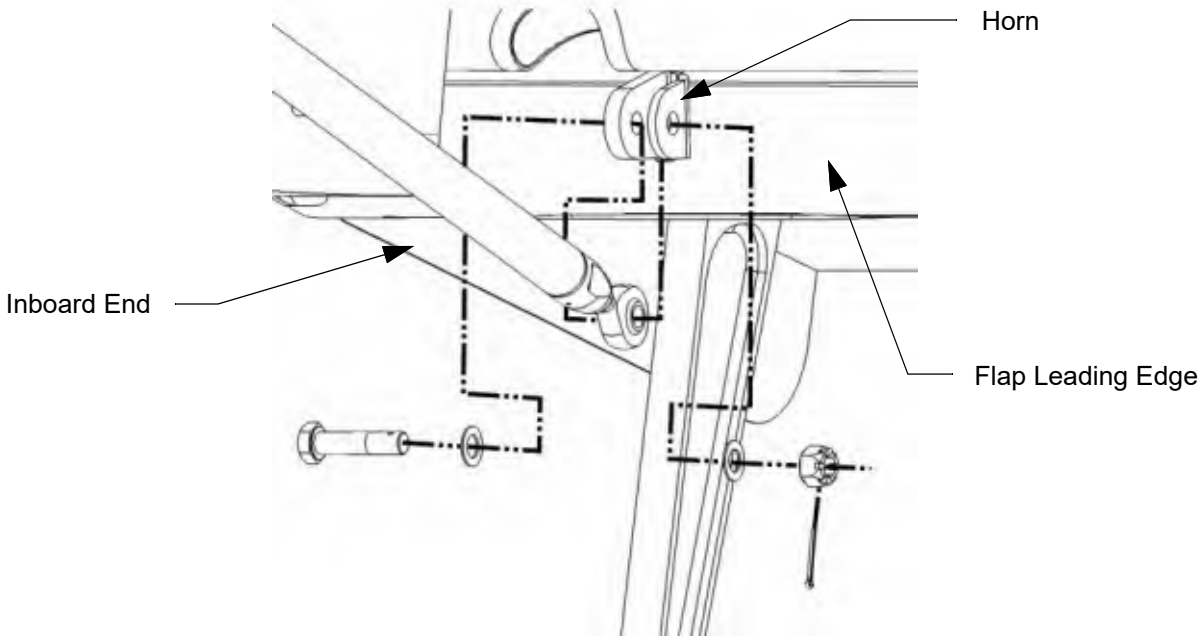

(h) Remove the cotter pins, nuts, bolts, and washers at the outboard, center, and inboard hinges that attach the flap to the wing.

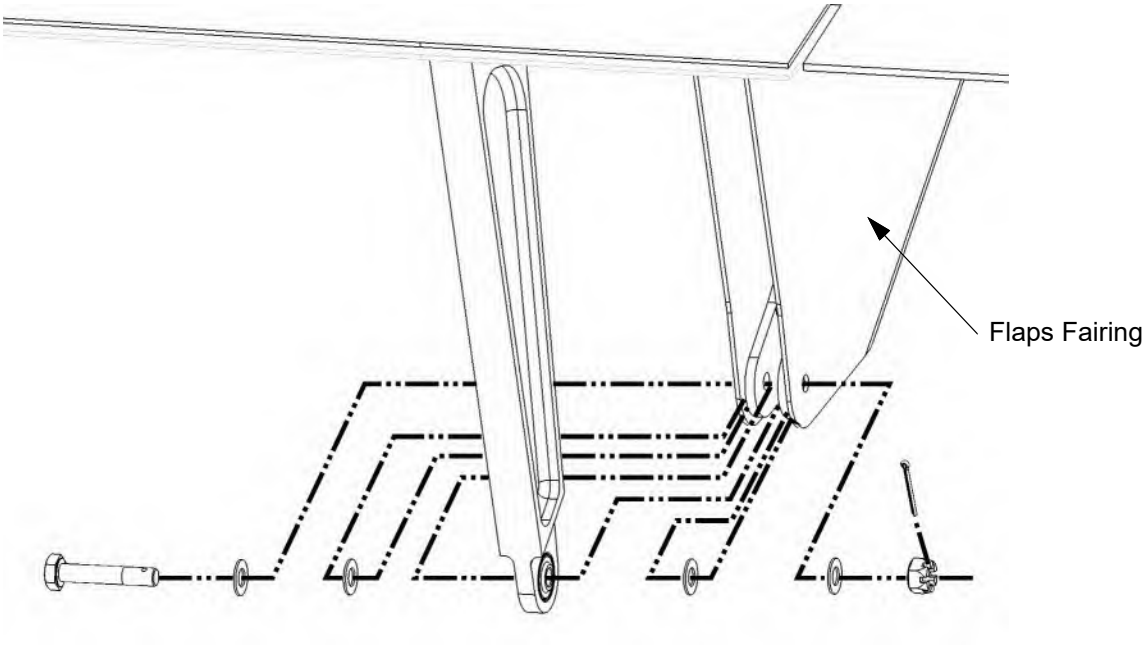

(i) Remove the flap from the airplane.

(j) Disconnect external electrical power from the airplane (refer to Chapter 24-40).

(2) Installation

(a) Work on the airplane in a controlled environment. Clear the flaps of obstacles, tools, and personnel.

(b) Verify all linkages are clear before deploying the flaps mechanism.

(c) Reset the AIL TRIM circuit breaker.

(d) Set the BATT 1 and BATT 2 switches to OFF.

(e) Connect a ground power unit to the airplane (refer to Chapter 24-40).

(f) Set the flaps controller to the landing position to fully extend the flaps.

Note: Verify the flap is in the fully extended position.

(g) Connect the flap to the outboard, center, and inboard hinges on the wing using bolts, washers, and castellated nuts.

(h) Connect the push pull rod in the same orientation as it was removed using a bolt, washers, and a castellated nut.

(i) Verify the flap extends and retracts to the specified angles. Adjust as necessary.

(j) Disconnect external electrical power from the airplane (refer to Chapter 24-40).

(k) Install the main landing gear wheel well aft panel.

B. Flaps Hinge Fairing

(1) Removal

(a) Remove the screws attaching the flaps hinge fairing to the flaps hinge.

(b) Remove the RTV 100 sealant attaching the hinge fairing to the wing using a non-metallic scraper.

WARNING: Do not use metallic scrapers that could damage the wing during sealant removal. Plastic scrapers are recommended.

(c) Remove the fairing.

(2) Installation

(a) Remove old sealant from the hinge fairing and the wing.

(b) Thoroughly clean the mounting surfaces on the fairing and the wing using isopropyl alcohol.

(c) Install the screws attaching the flaps hinge fairing to the flaps hinge.

(d) Apply RTV 100 sealant to the gap between the flaps hinge fairing and the wing.

(e) Allow the sealant to fully cure in accordance with the sealant manufacturer's instructions.

(3) Inspection

WARNING: All flaps hinge fairings must be present and undamaged for flight.

(a) Inspect the hinge fairing for condition and security.

(b) Inspect the fairing and hinge hardware for condition and security.

(c) Ensure the fairing does not interfere with flaps operation.

Figure 57-50.1: Flaps Hinge Fairings

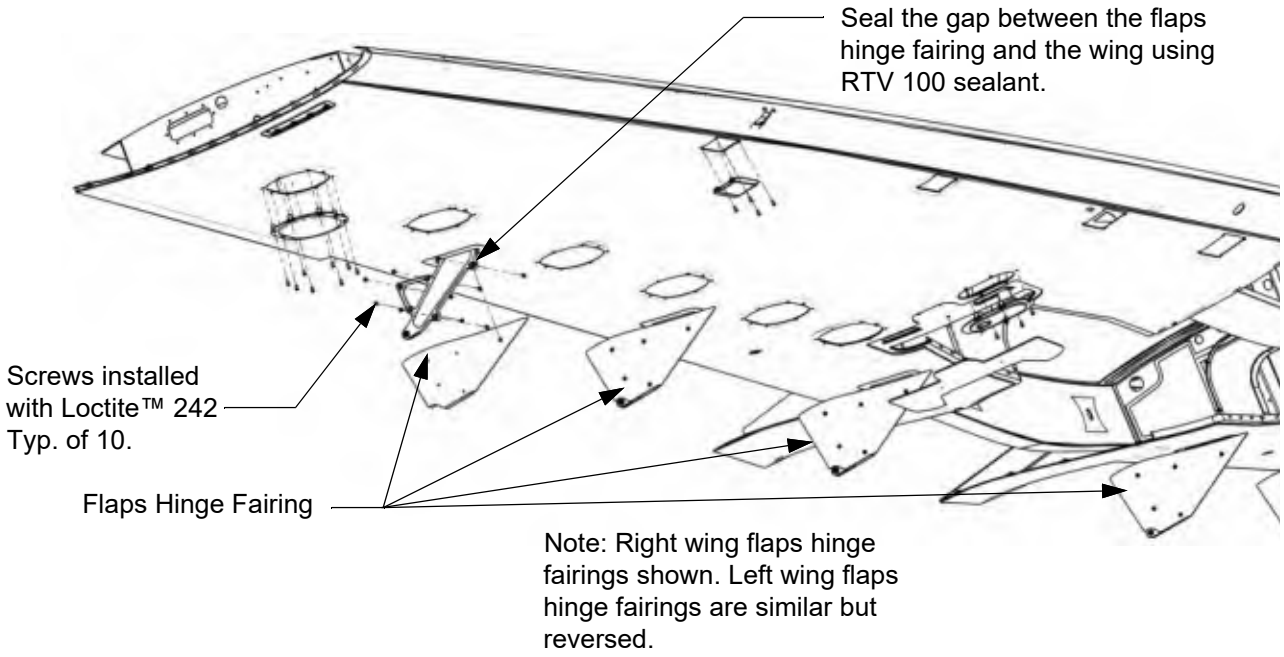

C. Middle and Outboard Flaps Hinges

Removal and installation procedures for the middle and outboard flaps hinges are similar.

(1) Removal

(a) Pull the FLAPS circuit breaker.

(b) Remove the flap.

(c) Remove the bolt, washers, and castellated nut attaching the flaps side hinge to the wing side hinge.

(d) Remove the flaps side hinge access panel and the wing side hinge fairing. The panel is attached with tank sealant and the fairing is attached using screws and RTV sealant.

(e) Remove the four bolts and washers attaching the wing side of the flaps hinge to the wing.

(f) Remove the three bolts and washers attaching the flaps side of the flaps hinge to the flap.

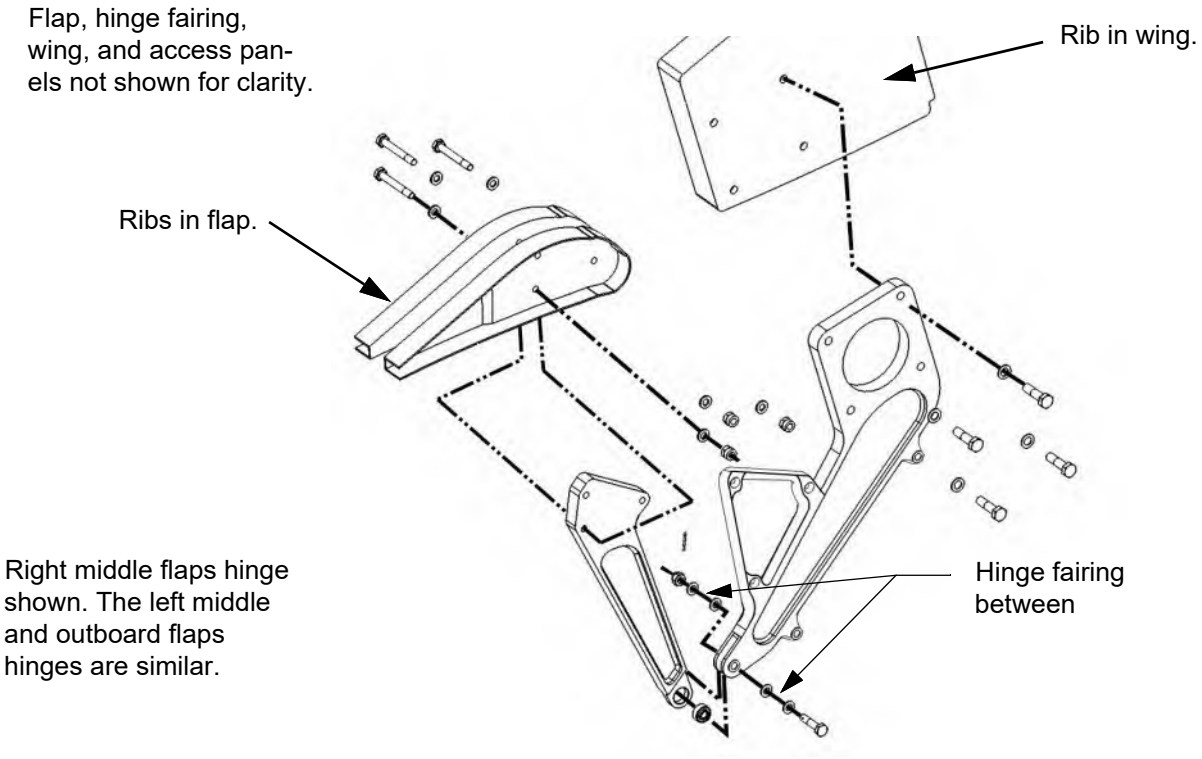

(g) Remove the hinge.

(2) Installation

(a) Slide the applicable flaps hinge side through the flaps side and the wing side access panels.

(b) Hold the flaps hinge in position against the wing and the flap.

(c) Loosely install the four bolts and washers attaching the flaps hinge to the wing.

(d) Loosely install the three bolts and washers attaching the flaps hinge to the flaps.

(e) Ensure the flap and hinges are properly co-axially aligned through the hinge axis then tighten the attachment hardware.

(f) Thoroughly clean the flaps hinge access panel and the flaps hinge fairing.

(g) Attach the access panel to the wing using 3M AC 240 B-1/2 tank sealant.

(h) Allow the tank sealant to fully cure (refer to the sealant manufacturer's instructions).

(i) Attach the flaps hinge fairing using screws and RTV sealant.

(j) Attach the flaps side hinge to the wing side hinge using a bolt, washers, and castellated nut.

(k) Reset the FLAPS circuit breaker.

D. Inboard Flaps Hinges

(1) Removal

(a) Work on the airplane in a controlled environment. Clear the flaps of obstacles, tools, and personnel.

(b) Set the BATT 1 and BATT 2 switches to OFF.

(c) Connect a ground power unit to the airplane (refer to Chapter 24-40).

(d) Set the flaps controller to the landing position to fully extend the flaps.

(e) Pull the FLAPS circuit breaker.

(f) Remove the main landing gear wheel well wheel wells and gear tunnels to access the flap push pull control rods.

(g) Remove the castellated nut, bolt, and washers attaching the push pull rod to the flaps horn.

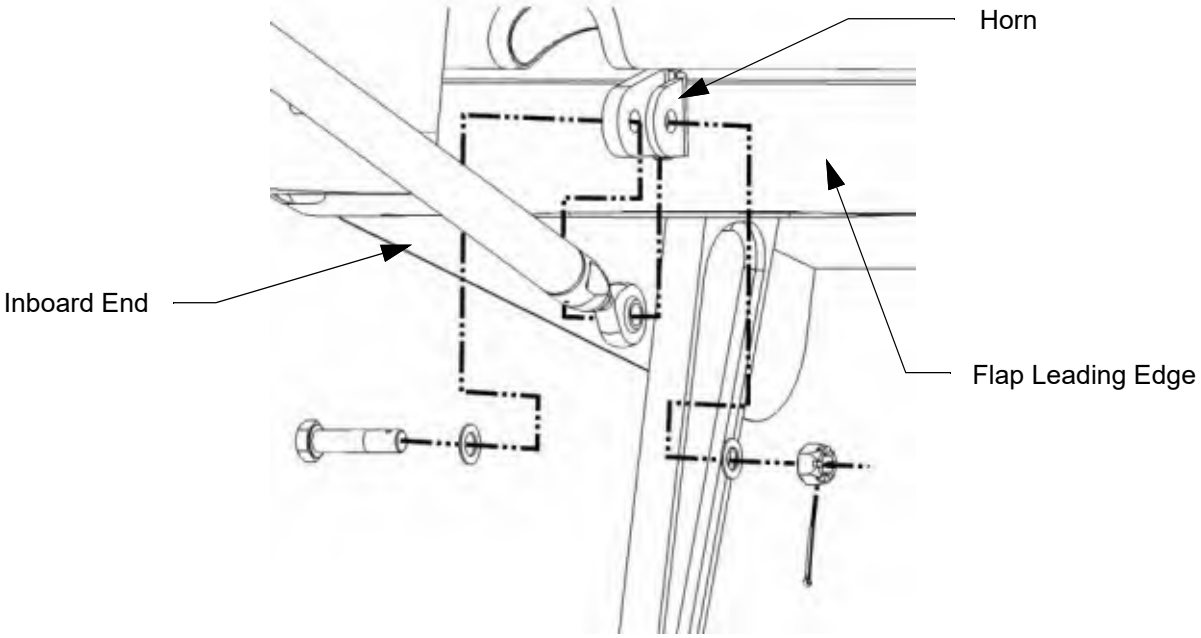

(h) Remove the bolt, washers, and castellated nut attaching the flaps side hinge to the wing side hinge.

(i) Remove the flaps side hinge access panel and the wing side hinge fairing. The panel and fairing are attached using tank sealant.

(j) Remove the four bolts, four nuts, and eight washers attaching the wing side of the flaps hinge to the wing.

(k) Remove the three bolts, three nuts, and six washers attaching the flaps side of the flaps hinge and the 2-piece flaps horn to the flap.

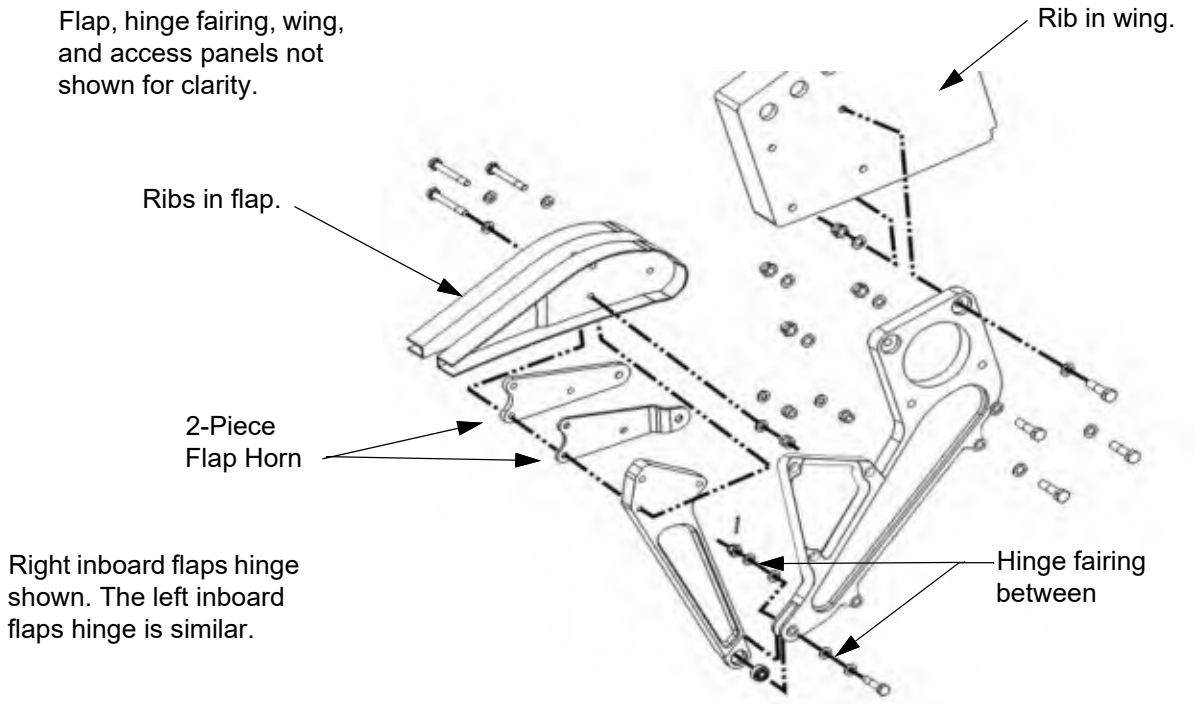

(l) Remove the hinge.

(m) Remove the 2-piece flaps horn.

(n) Disconnect external electrical power from the airplane (refer to Chapter 24-40).

(2) Installation

(a) Work on the airplane in a controlled environment. Clear the flaps of obstacles, tools, and personnel.

(b) Pull the FLAPS circuit breaker.

(c) Slide the appropriate flaps hinge side through the flaps side and the wing side access panels.

(d) Insert the 2-piece flaps horn into the flaps.

(e) Install the three bolts, three nuts, and six washers attaching the flaps side of the flaps hinge and the 2-piece flaps horn to the flap.

(f) Install the four bolts, four nuts, and eight washers attaching the wing side of the flaps hinge to the flap.

(g) Connect the push pull rod to the flaps horn in the same orientation as it was removed using a bolt, washers, and castellated nut.

(h) Thoroughly clean the flaps hinge access panel and the flaps hinge fairing then attach them to the flap and the wing using 3M AC 240 B-1/2 tank sealant.

(i) Allow the tank sealant to fully cure (refer to the sealant manufacturer's instructions).

(j) Attach the flaps side hinge to the wing side hinge using a bolt, washers, and castellated nut.

(k) Set the BATT 1 and BATT 2 switches to OFF.

(l) Connect a ground power unit to the airplane (refer to Chapter 24-40).

(m) Reset the FLAPS circuit breaker.

(n) Verify the flap extends and retracts to the specified angles. Adjust as necessary.

(o) Disconnect external electrical power from the airplane (refer to Chapter 24-40).

(p) Install the main landing gear wheel well aft panel.

This Page Intentionally Left Blank

AILERONS

1. Description

The ailerons are made of carbon fiber composite material spars, ribs, and skins and are controlled using a system of pulleys, cables, bellcranks, and push pull rods. The left aileron has a servo actuated trim tab.

2. Maintenance Practices

A. Ailerons

Removal and installation procedures are identical for the left and right ailerons.

(1) Removal

(a) Remove the bolt attaching the push pull rod to the aileron horn.

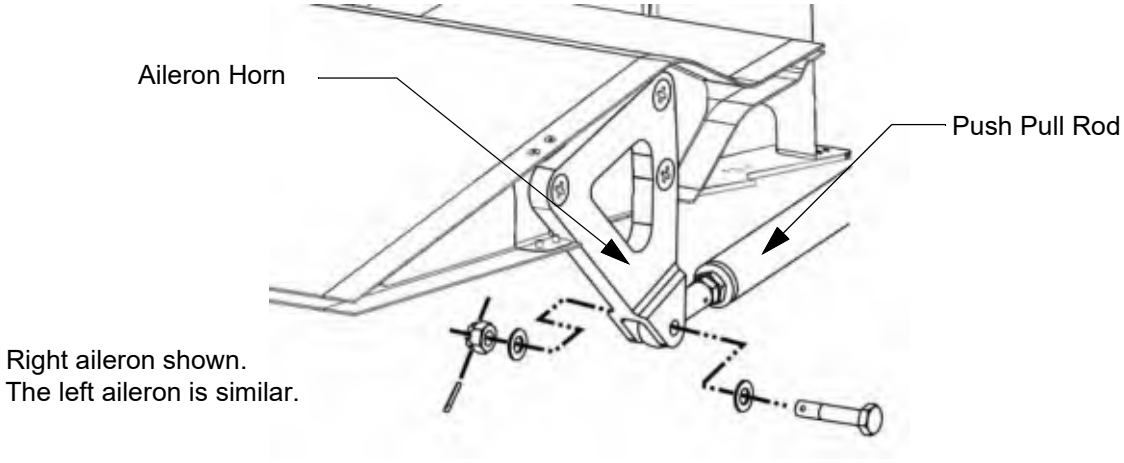

(b) Push the trailing edge of the aileron up to access to the bolts attaching the aileron to the wing.

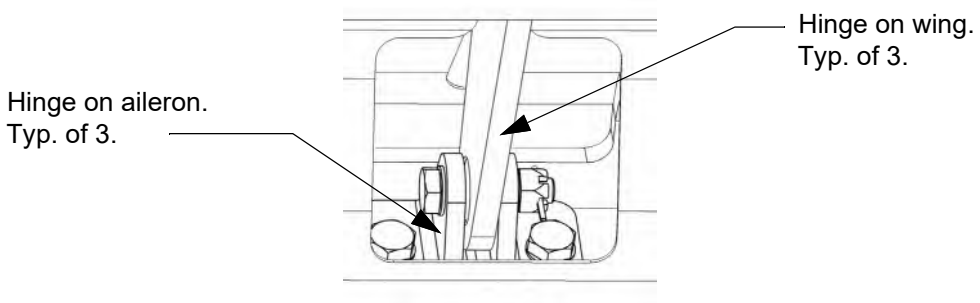

(c) While holding the aileron, remove all of the cotter pins, castellated nuts, washers, and bolts attaching the aileron to the wing.

(d) Carefully move the aileron aft to access the trim tab electrical connector (left aileron only). Disconnect the trim tab electrical connector.

(e) Remove the aileron.

(2) Installation

(a) Installation of the ailerons is the reverse of removal.

Figure 57-60.1: Aileron Horn and Hinges

Aileron top skin not shown for clarity.

The right aileron is shown. The left aileron is similar except that it has a trim tab.

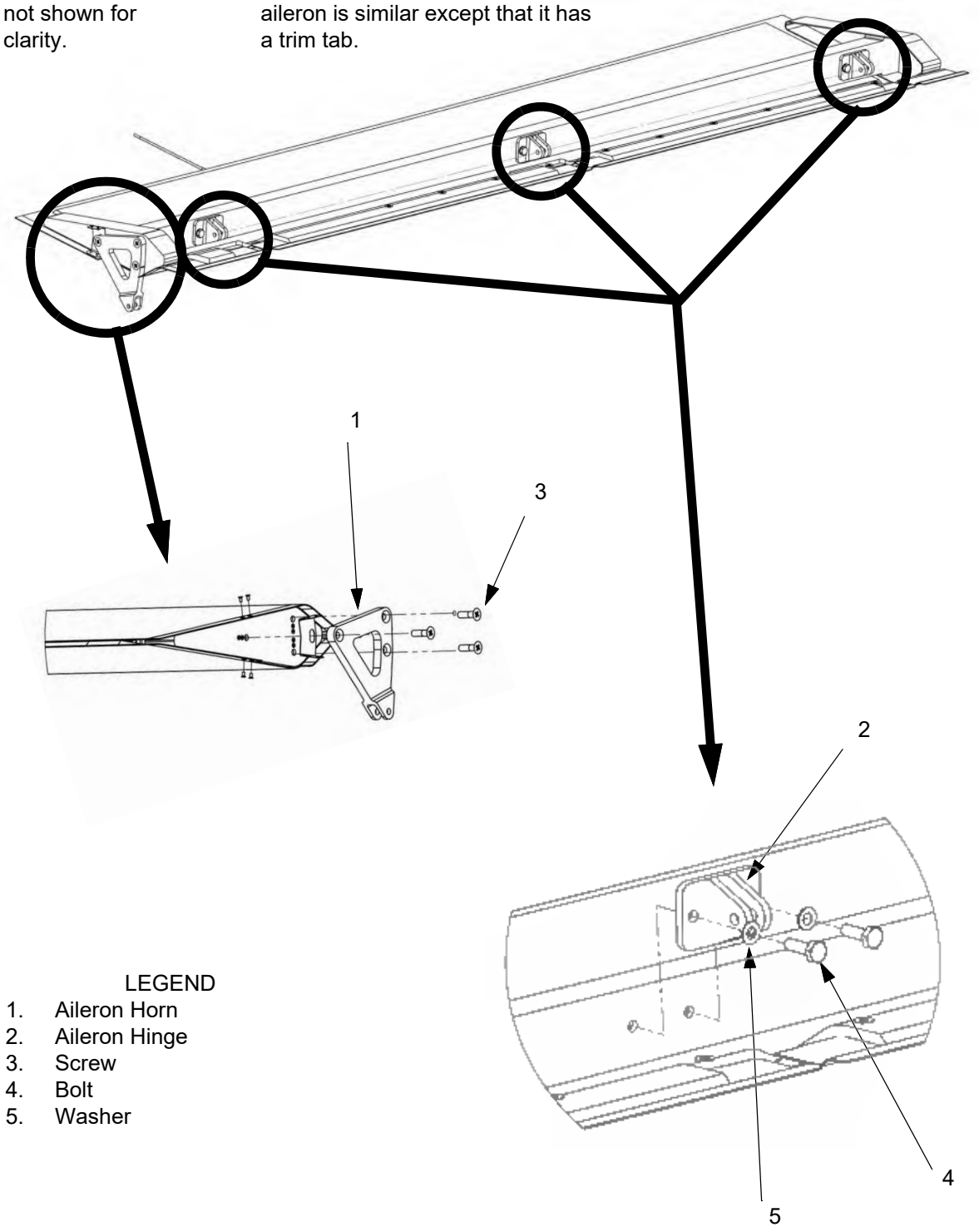

LEGEND

1. Aileron Horn
2. Aileron Hinge
3. Screw
4. Bolt
5. Washer

B. Balancing

Aileron balance must be checked whenever the aileron is repaired, altered, or repainted. If weight must be added or removed from the aileron(s) contact Epic Aircraft, LLC for instructions.

Note: When balancing the aileron, the aileron assembly must be complete including, but not limited to, mounting brackets, all attachment hardware, trim tab, access panels, and paint.

Note: Ensure there is no air movement in the room where balancing will be done that can deflect the aileron from its balanced condition.

(1) Remove the aileron from the airplane.
(2) Weigh the aileron assembly. The weight for the aileron must be between 21.82 to 30.1 lbs (9.90 to 13.65 kg).
(3) Use either knife edges or hinges attached to the side of a bench to support the aileron during balancing.
(4) Ensure the knife edges or hinges are level and parallel along the length of the aileron.
(5) Attach the aileron to the hinges using bolts or insert bolts through the aileron hinges then balance them on the knife edges, as applicable.
(6) Measure the force required at the Weigh Point to hold the aileron level. The measured force must be between -5.9 to 2.08 ounces (-167.26 to 58.97 grams), inclusive.

Note: The negative value represents an over balanced control surface, forward edge heavy.

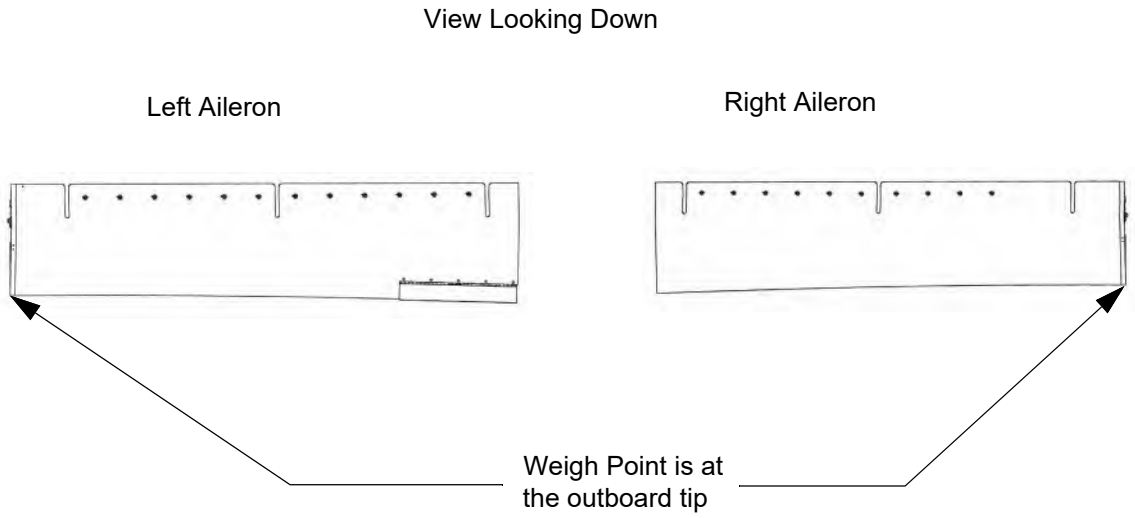

(7) Add or remove weight to balance the aileron. Mass balance weights type 1 and type 2 may be used in combination as required to balance the aileron. It is permissible to omit weights to achieve balance. Stacking weights is permissible when aileron cove clearances permit.

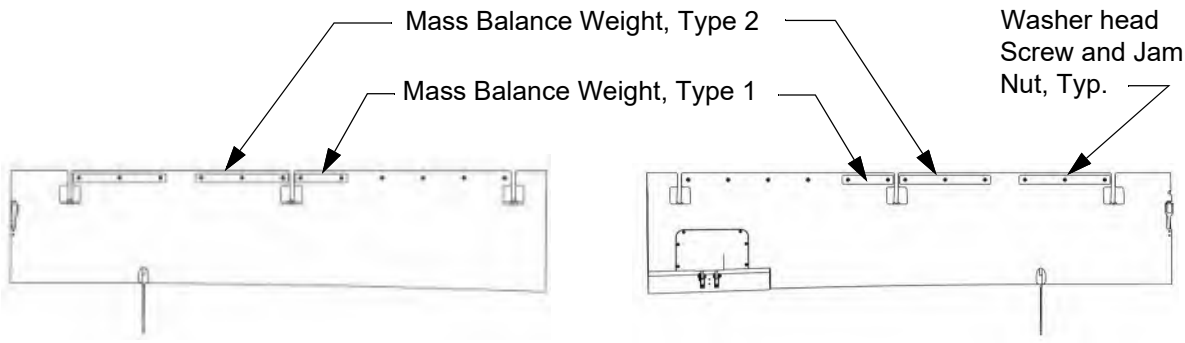

(8) When balance has been achieved bond the required weights to the aileron using clear RTV 100. Also attach the weights using washer head screws, jam nuts, and Loctite™ 242.

This Page Intentionally Left Blank

ELECTRICAL HARNESS

1. Description

This chapter gives information and procedures related to the wings electrical harnesses.

Two electrical wiring harnesses are used to connect the landing lights, navigation lights, stall prevention sensor, fuel pumps, and aileron trim to the airplane electrical system.

2. Maintenance Practices

A. Electrical Harness

(1) Removal

(a) Set the BATT 1 and BATT 2 switches to OFF.

(b) Disconnect external electrical power from the airplane (refer to Chapter 24-40).

(c) Remove the cowling (refer to Chapter 71-10).

(d) Disconnect the aircraft batteries by disconnecting the negative battery cables first then the positive battery cables.

WARNING: To reduce the possibility of personal injury and equipment damage, disconnect the negative battery cable before disconnecting the positive battery cable.

(e) Insulate the battery terminals.

(f) Disconnect the equipment and components connected to the wiring harness.

(g) Tag the connectors.

(h) Cut and remove cable ties.

(i) Disconnect the wiring harness fuselage connector.

(j) Attach a pull line to one end of the harness then remove the harness from the airplane.

(k) Leave the pull line in place for installation of the new or repaired harness.

(2) Installation

(a) Attach the pull line to the wiring harness then carefully pull the harness into position.

(b) Make connections to the tagged connectors.

(c) Attach the harness using cable ties.

(d) Connect the harness to the fuselage connector.

(e) Connect the aircraft batteries starting with the positive battery cables then the negative cables.

WARNING: To reduce the possibility of personal injury and equipment damage, connect the positive battery cable before connecting the negative battery cable.

(f) Do an operational check of the wings and the cockpit instrumentation.

(g) Install the cowling (refer to Chapter 71-10).

Figure 57-80.1: Wing Electrical Wiring Harnesses (Sheet 1 of 5)

Top wing skin not
shown for clarity.

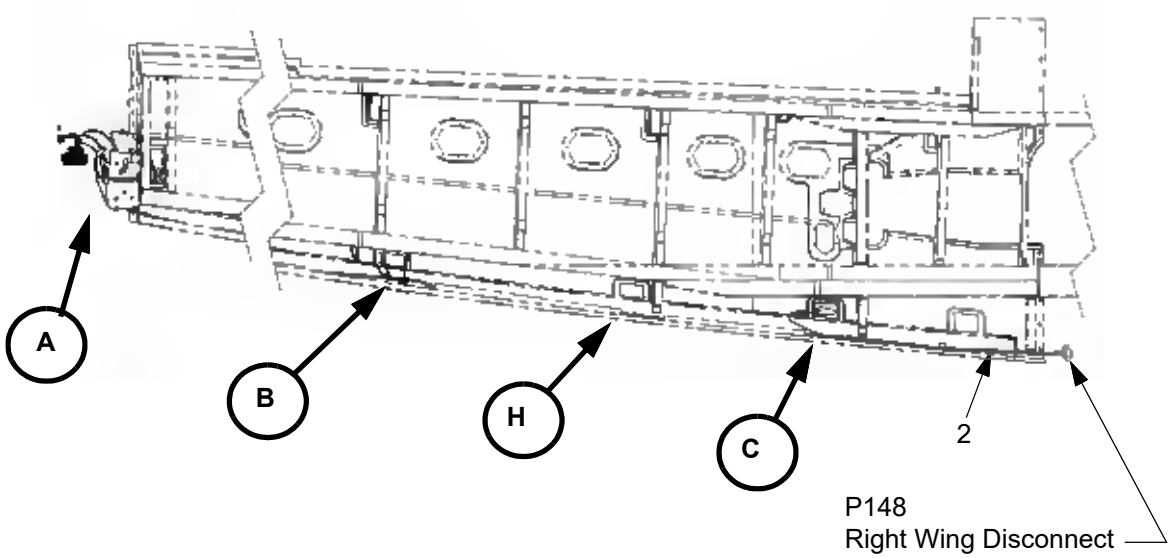

Right Wing Top View

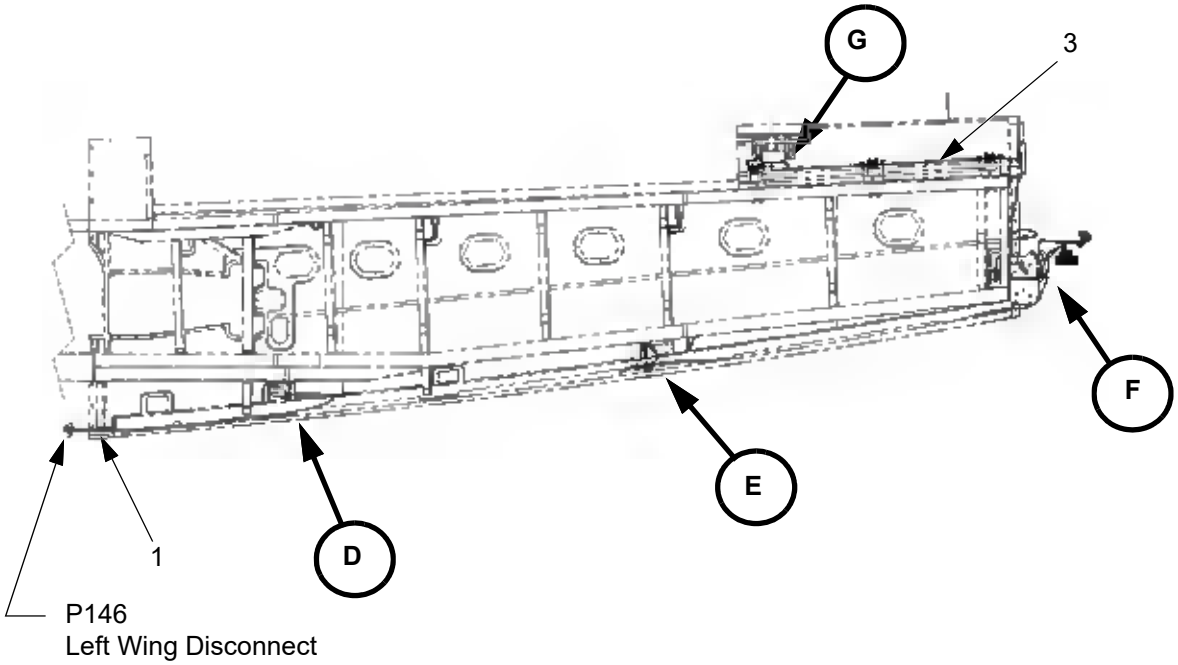

Left Wing Top View

LEGEND

1. Wiring Harness, Left Wing
2. Wiring Harness, Right Wing
3. Wiring Harness, Trim Actuator Pigtail

Figure 57-80.1: Wing Electrical Wiring Harnesses (Sheet 2 of 5)

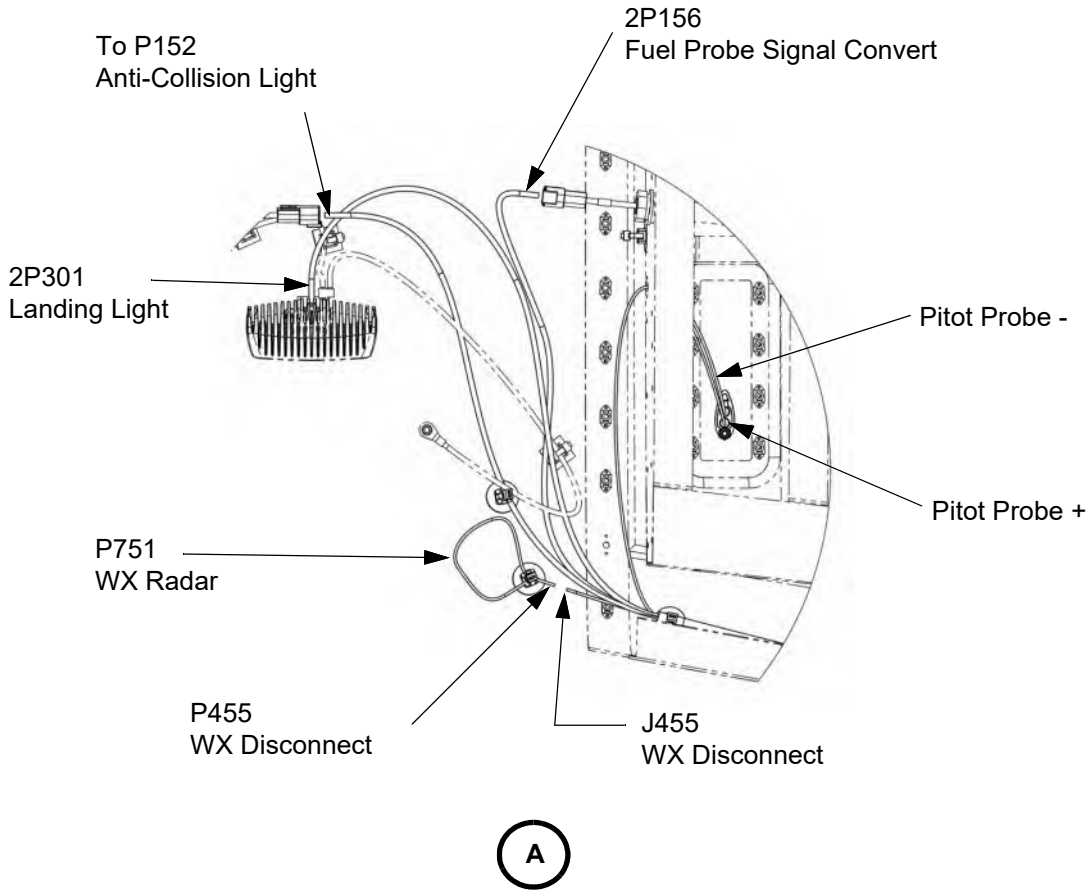

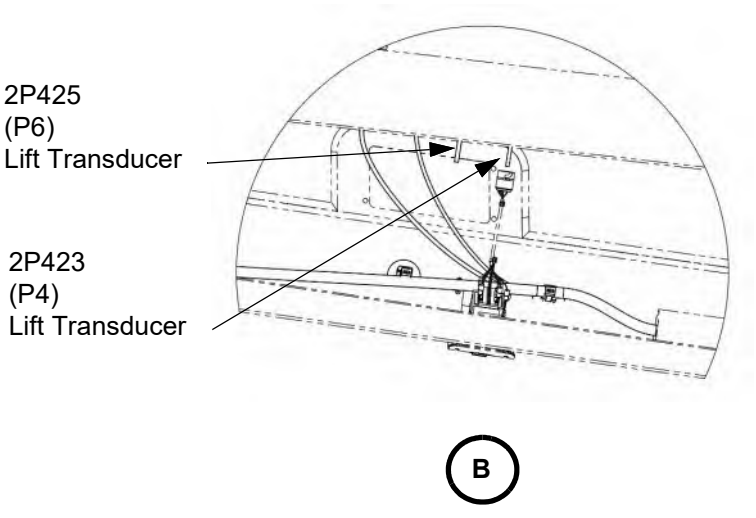

Figure 57-80.1: Wing Electrical Wiring Harnesses (Sheet 3 of 5)

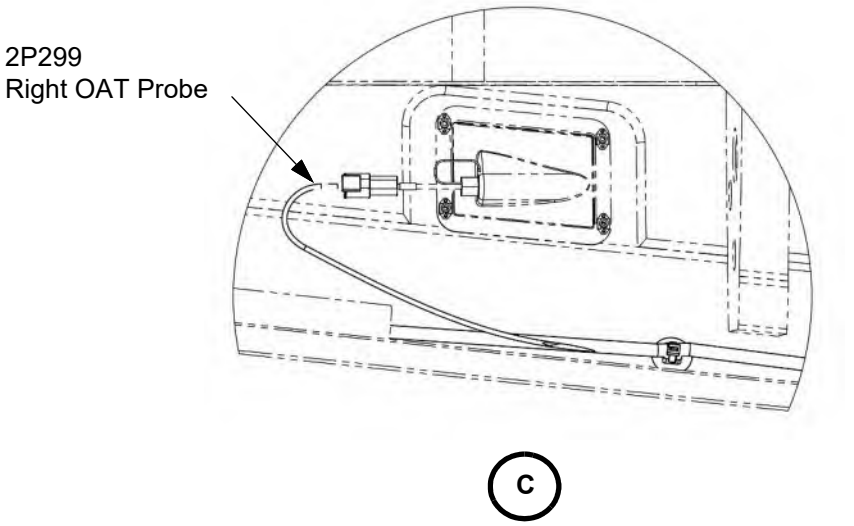

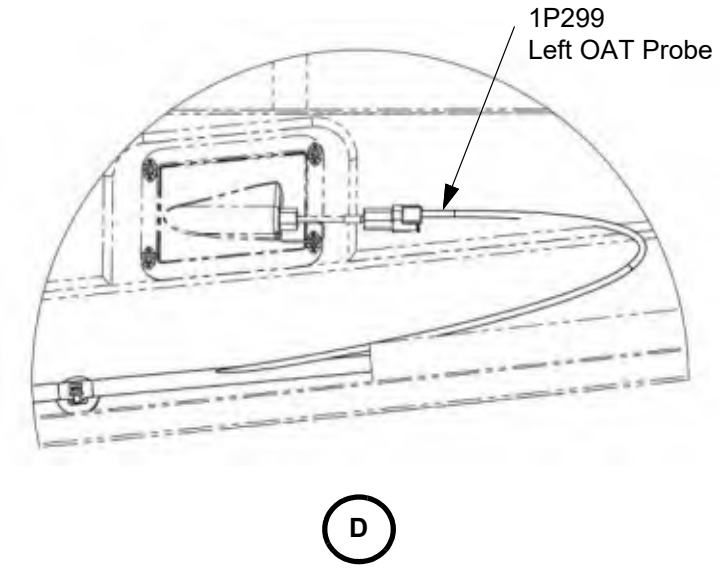

Figure 57-80.1: Wing Electrical Wiring Harnesses (Sheet 4 of 5)

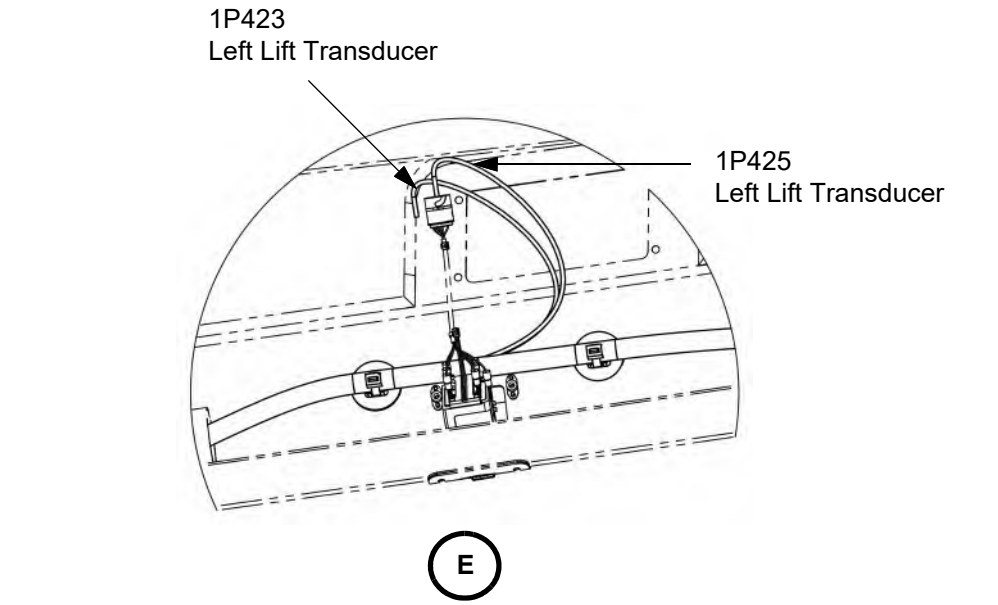

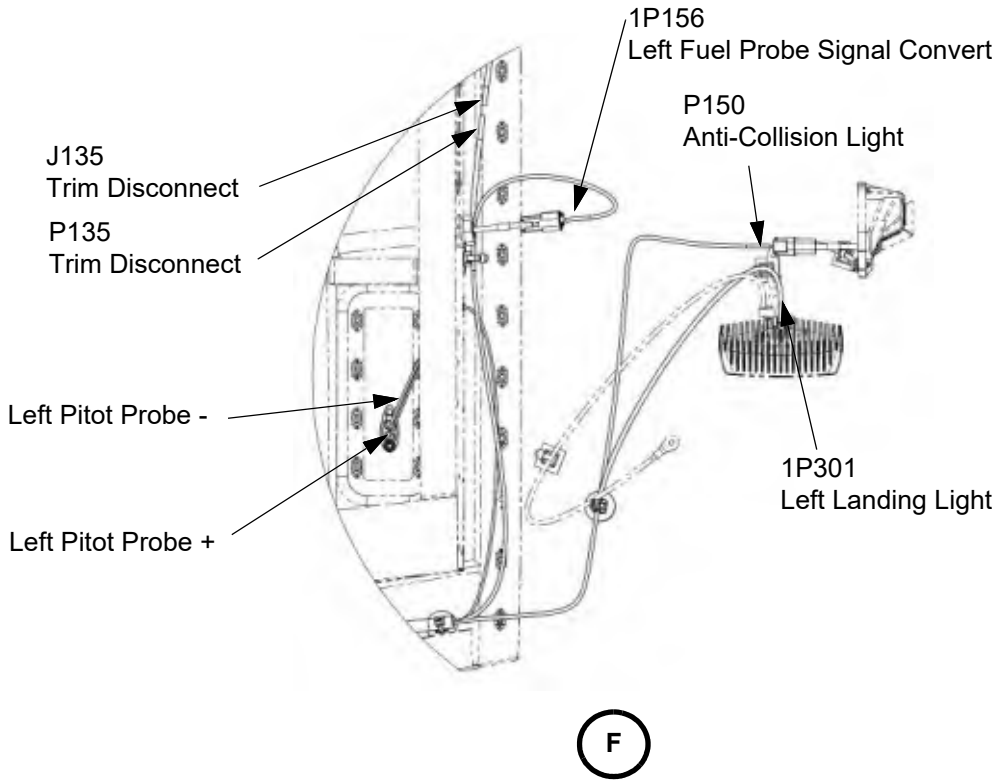

Figure 57-80.1: Wing Electrical Wiring Harnesses (Sheet 5 of 5)

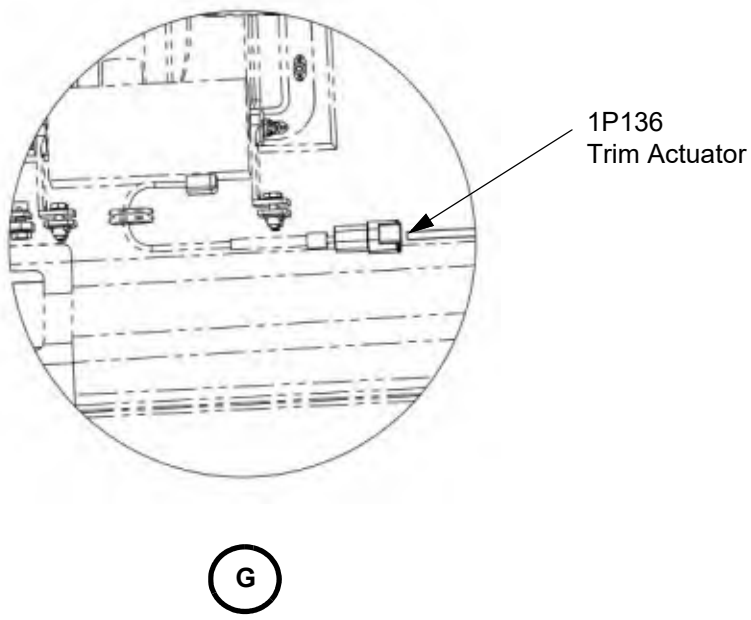

This Page Intentionally Left Blank

CHAPTER 61

Propeller

This Page Intentionally Left Blank

List of Effective Pages

Chapter/Section	Page Number	Effective Date
61-Title	Page 1	02 Jan 2020
61-Title	Page 2	02 Jan 2020
61-LOEP	Page 1	10 Jul 2025
61-LOEP	Page 2	02 Jan 2020
61-TOC	Page 1	14 Jul 2021
61-TOC	Page 2	02 Jan 2020
61-00	Page 1	14 Jul 2021
61-00	Page 2	14 Jul 2021
61-00	Page 3	02 Jan 2020
61-00	Page 4	02 Jan 2020
61-00	Page 5	02 Jan 2020
61-00	Page 6	02 Jan 2020
61-00	Page 7	02 Jan 2020
61-00	Page 8	02 Jan 2020
61-00	Page 9	02 Jan 2020
61-00	Page 10	02 Jan 2020
61-10	Page 1	14 Jul 2021
61-10	Page 2	02 Jan 2020
61-10	Page 3	02 Jan 2020
61-10	Page 4	02 Jan 2020
61-10	Page 5	20 Oct 2023
61-10	Page 6	20 Oct 2023
61-10	Page 7	20 Oct 2023
61-10	Page 8	20 Oct 2023
61-11	Page 1	14 Jul 2021
61-11	Page 2	14 Jul 2021
61-11	Page 3	14 Jul 2021
61-11	Page 4	20 Oct 2023
61-11	Page 5	20 Oct 2023
61-11	Page 6	20 Oct 2023
61-20	Page 1	02 Jan 2020
61-20	Page 2	10 Jul 2025
61-20	Page 3	02 Jan 2020
61-20	Page 4	02 Jan 2020

This Page Intentionally Left Blank

CHAPTER 61

Table of Contents

List of Effective Pages ..... 61-LOEP / Page 1
Table of Contents ..... 61-TOC / Page1

Paragraph **Page Number**

Propeller

1. General ..... 61-00 / Page 1
2. Overhaul and Maintenance ..... 61-00 / Page 1
3. Troubleshooting ..... 61-00 / Page 2

4 Bladed Propeller Assembly *(SN: K003 - K010)*

1. Description ..... 61-10 / Page 1
2. Maintenance Practices ..... 61-10 / Page 1
   A. Spinner ..... 61-10 / Page 1
   B. Propeller ..... 61-10 / Page 4

5 Bladed Propeller Assembly *(SN: K011 and On, or K003 - K004 with SB-0017)*

1. Description ..... 61-11 / Page 1
2. Maintenance Practices 61-11 / Page 1
   A. Spinner ..... 61-11 / Page 1
   B. Propeller ..... 61-11 / Page 3

Controlling

1. Description ..... 61-20 / Page 1
2. Maintenance Practices ..... 61-20 / Page 1
   A. Propeller Governor ..... 61-20 / Page 1
   B. Propeller Overspeed Governor ..... 61-20 / Page 1

This Page Intentionally Left Blank

PROPELLER

1. General

(SN: K003 - K010) The E1000 has a Hartzell Propeller, Inc. HC-E4A-3D/E10477SK/D-5500-1P counterweighted, four bladed, constant speed, variable pitch, full feathering, reversible propeller.

(SN: K011 and On, or K003 - K004 with SB-0017) The E1000 GX has a Hartzell Propeller, Inc. HC-E5A-3A/NC10245B*6 counterweighted, five bladed, constant speed, variable pitch, full feathering, reversible, carbon fiber composite propeller.

The pitch of the blades is changed using engine driven hydraulic pressure, the twisting moment of the rotating blades, and spring force in a configuration that provides the correct pitch for the engine load. A single acting engine driven governor controls the engine oil supplied to a piston in the center of the hub. The piston is linked to each blade and controls blade angle as hydraulic pressure operates the piston to overcome spring force and centrifugal counterweights mounted at the base of each blade. An increase in oil pressure from the governor decreases the blade pitch increasing propeller RPM. A decrease in oil pressure from the governor increases blade angle and decrease the propeller RPM. The feathering spring ensures the propeller blades will feather with the loss of engine oil pressure.

Stabilized operation on the ground between 350 -950 RPM for the 4 bladed propeller and 400 - 900 RPM for the 5 bladed propeller is not permitted.

WARNING: Stabilized ground operation within the propeller restricted RPM range can generate high propeller stresses and result in fatigue damage to the propeller. this damage can lead to a reduced propeller fatigue life, propeller failure, and loss of control of the airplane. The propeller restricted RPM range is defined in the Airplane Flight Manual. Contact the airplane or propeller manufacturer for corrective actions if a propeller restriction or limitation is violated.

2. Overhaul and Maintenance

Refer to the current revision of the Hartzell Propeller, Inc. Propeller Owner's Manual (No. 149) for the four bladed propeller, Propeller Owner's Manual (No. 147) for the five bladed propeller, Service Letter HC-SL-61-61Y, and Spinner Assembly Maintenance Manual (Manual No. 127).

3. Troubleshooting

Propeller Critical Parts - Instructions and procedures in this section may involve propeller critical parts.

CAUTION: Refer to the introduction chapter of Hartzell Propeller Owner's Manual 149 (4 bladed propeller) or Hartzell Propeller Owner's Manual 147 (5 bladed propeller) for information about propeller critical parts. Refer to the illustrated parts list chapter of the applicable overhaul Manual(s) for the identification of specific propeller critical parts.

Oil or Grease Leakage- A new propeller may leak slightly during the first 10 hours of operation.

CAUTION: Grease leakage that can be described as excessive and appearing suddenly, especially when accompanied by vibration, should be investigate immediately before the next flight.

Vibration -

CAUTION: Any vibration which can be described as appearing suddenly or is accompanied by unexplained grease leakage should be investigated immediately by an authorized repair station before the next flight.

CAUTION: Vibration problems due to propeller system imbalance are normally felt throughout the RPM range with the intensity of vibration increasing with RPM. Vibration problems tat occur in a narrow RPM range are a symptom of resonance and are potentially harmful to the propeller. Avoid operation in that RPM range until the propeller can be checked by an authorized repair station.

Problem	Probable Cause	Solution
Surging propeller.	Trapped air in the propeller hydraulic cylinder. Cycle the propeller through its entire operating blade angle range at least three times. If surging recurs it is likely due to a faulty governor.	Inspect the governor then adjust, repair, or replace it as applicable.
	Friction or binding within the governor control or the propeller.	Test the propeller on a test bench at an approved repair facility.
Increase in engine speed while descending or increasing airspeed	Governor is not reducing oil volume	Inspect the governor then adjust, repair, or replace it as applicable.
	Friction in the propeller.	Refer to an approved repair facility.
Decrease in engine speed while increasing airspeed.	Governor is excessively decreasing oil volume	Inspect the governor then adjust, repair, or replace it as applicable.
	Feathering command engaged on propeller pitch control.	Adjust propeller pitch control.
Increase in engine speed while decreasing airspeed.	Governor is excessively increasing oil volume.	Inspect the governor then adjust, repair, or replace it as applicable.
Decrease in engine speed while decreasing airspeed.	Governor is not increasing oil volume in the propeller.	Inspect the governor then adjust, repair, or replace it as applicable.
	Engine oil transfer system is leaking excessively.	Do a transfer bearing leakage test per engine manufacturer's instructions.
	Friction in the propeller.	Refer to an approved repair facility.

Problem	Probable Cause	Solution
Propeller goes to uncommanded high pitch.	Loss of propeller oil pressure.	Inspect the governor pressure relief valve, the governor drive, and the engine oil supply
	Start locks not engaging.	Refer to an approved repair facility.
Propeller goes to uncommanded low pitch	Governor pilot valve sticking.	Inspect the governor then adjust, repair, or replace it as applicable.
RPM increases with power and airspeed, Propeller RPM control has little or no effect.	Excessive friction in the blade bearings or pitch changing mechanism.	Refer to an approved repair facility.
	Broken feathering spring.	Refer to an approved repair facility.
RPM control is sluggish (especially on reducing RPM).	Broken feathering spring.	Refer to an approved repair facility.
Failure to feather (or feathers slowly).	Broken feathering spring.	Refer to an approved repair facility.
	Governor control linkage incorrectly rigged.	Re-rig the control linkage.
	Governor drain not functioning.	Inspect the governor then adjust, repair, or replace it as applicable.
	Friction in the propeller or maladjustment.	Refer to an approved repair facility.
Failure to unfeather.	Governor control linkage incorrectly rigged.	Re-rig the control linkage.
	Governor malfunction.	Inspect the governor then adjust, repair, or replace it as applicable.
	Friction in the propeller or maladjustment.	Refer to an approved repair facility.

Problem	Probable Cause	Solution
Start locks (anti-feather latches) fail to latch on shutdown.	Propeller was feathered before shutdown.	
	Shutdown occurred at high RPM with the propeller control off the low pitch stop.	The problem may be solved by restarting the engine, placing the propeller control in the correct shutdown position, then shutting down the engine
	Excessive governor pump leakage.	Refer to an approved repair facility.
	Broken start lock.	Refer to an approved repair facility.

Problem	Probable Cause	Solution
Vibration	Excessive play in airplane control surfaces, exhaust system, landing gear, doors, etc.	Repair or adjust components causing the vibration, as applicable.
	Uneven lubrication of the propeller	Refer to an approved repair facility.
	Engine to propeller flange mate.	Inspect and re-install the propeller if necessary.
	Blade track.	Remove foreign matter from the propeller mounting flange. If no foreign matter is present refer to approved repair facility.
	Blade angles.	Refer to the Hartzell Propeller Overhaul Manuals 141, 142, 143A, or 158A for inspection and repair procedures.
	Spinner is cracked or incorrectly installed	Re-install or replace if damaged.
	Static imbalance.	Refer to an approved repair facility.
	Airfoil profile between blades is not identical.	Refer to an approved repair facility.
	Hub or blade damaged or cracking.	Refer to an approved repair facility.
	Grease or oil leakage from a seemingly solid surface of the hub or blade.	Refer to an approved repair facility.
	Blade deformation.	Ensure the propeller is dynamically balance. Refer to an approved repair facility.

Problem	Probable Cause	Solution
Propeller overspeed.	Low pitch stop maladjusted.	Inspect the governor then adjust, repair, or replace it as applicable.
	Governor maximum set too high.	Inspect the governor then adjust, repair, or replace it as applicable.
	Broken feathering spring.	Feathering spring replacement by approved repair facility.
	Governor pilot valve jammed, supplying high pressure only.	Inspect the governor then adjust, repair, or replace it as applicable.
	Tachometer error.	Inspect and repair or replace the tachometer.
Propeller underspeed.	Governor oil pressure low.	Inspect the governor then adjust, repair, or replace it as applicable.
	Governor oil passage clogged.	Inspect the governor then adjust, repair, or replace it as applicable.
	Tachometer error.	Inspect and repair or replace the tachometer.
Grease leakage.	Incorrectly torqued or loose lubrication fitting.	Tighten the fitting.
	Defective lubrication fitting.	Replace the fitting.
	Faulty seal at the blade socket between the blade hub.	Have the seal(s) replaced by an approved repair facility.
	Leakage from the hub and beta rod interface.	Refer to an approved repair facility.
	Cracked hub.	Refer to an approved repair facility.

Problem	Probable Cause	Solution
Oil leakage.	Leaks between the hub and engine due to a faulty or missing seal between the propeller hub and the engine flange.	Install a new seal.
	Leaks between the hub and cylinder due to a faulty or missing seal between the hub and the cylinder.	Have the seal(s) replaced by an approved repair facility.
	Leaks between the hub halves, beta rod and hub, and lubrication fittings due to faulty seals between the hub and pitch change rod.	Have the seal(s) replaced by an approved repair facility.
	Leaks from the front of the cylinder or through the start locks due to faulty seals between the piston and the cylinder or the piston and the pitch change rod.	Have the seal(s) replaced by an approved repair facility.

Figure 61-00.1: Propeller

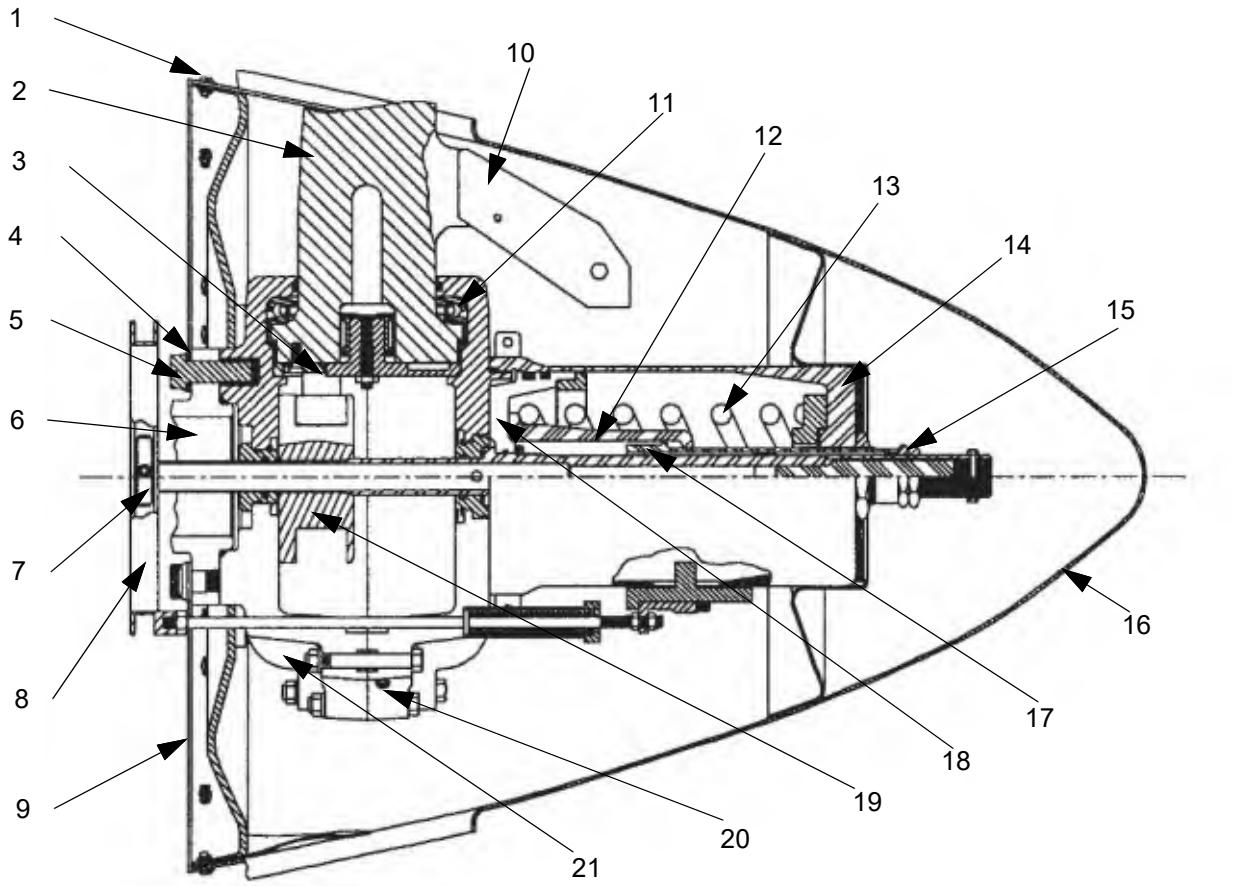

LEGEND

1. Spinner Mounting Screw
2. Blade
3. Preload Plate
4. Mounting Washer
5. Mounting Bolt
6. Engine Flange
7. Carbon Block Assembly
8. Beta Ring
9. Spinner Bulkhead
10. Counterweight
11. Blade Retention Bearing
12. Pitch Change Rod
13. Spring
14. Cylinder
15. Feather Stop
16. Spinner Dome
17. Reverse Adjust Sleeve
18. Piston
19. Fork
20. Grease Fitting
21. Hub

This Page Intentionally Left Blank

4 BLADED PROPELLER ASSEMBLY

1. Description

(SN: K003 - K010) This propeller assembly includes blades, hub, spinner, spinner bulkhead, and de-ice boots with energizing brush block. A propeller governor gives blade pitch control. A dump valve gives immediate release of propeller hub oil for full feathering activation. Blade pitch reverse is done with beta rods, a beta ring, carbon block, and lever.

2. Maintenance Practices

A. Spinner

(1) Removal

(a) Set the BATT 1 and BATT 2 switches to OFF.

(b) Disconnect external electrical power from the airplane (refer to Chapter 24-40).

(c) Install wheel chocks on the main wheels.

(d) Remove the screws and washers mounting the spinner dome to the spinner bulkhead.

Note: The spinner has been indexed at the factory to the correct position for best fit and minimum vibration. Always reinstall the spinner in the same orientation it had on removal by matching index markings. Look for index marks on the spinner and the bulkhead before removing the spinner. If none are found make index marks using a permanent marker.

(e) Carefully pull the spinner dome forward. Do not damage the blade shanks during spinner dome removal.

(f) Remove the forward bulkhead and spinner mounting spacers from the propeller hub.

(2) Installation

(a) Make the airplane level.

(b) Install the forward bulkhead mounting spacers onto the propeller hub. Ensure the forward bulkhead fits snugly on the hub.

(c) Remove or add spacers under the forward bulkhead so the spinner dome mounting holes are short of full alignment by 0.063 (+ 0.0005/- 0.010) inch. This will provide tension in the installation which improves spinner longevity by reducing wear causing vibration.

(d) Match index marks on the spinner dome and the spinner bulkhead then push the dome onto the spinner bulkhead. Do not damage the blade shanks.

(e) Install washers and screws. Tighten the screws finger tight.

(f) Put a fixed visible marker within 1/4 inch of the spinner dome tip. A ladder, tail stand, or similar will work. This will assist in aligning the tip of the spinner dome with the centerline of the propeller hub.

(g) Rotate the propeller by hand while watching the spinner dome tip and the fixed marker. Any misalignment will be easily seen.

(h) Gently bump the spinner dome tip in the direction required to align the tip with the propeller hub then rotate the propeller by hand. Continue this process until the spinner tip is aligned.

(i) Attach the spinner dome using washers and screws.

Figure 61-10.1: Spinner (Sheet 1 of 2)

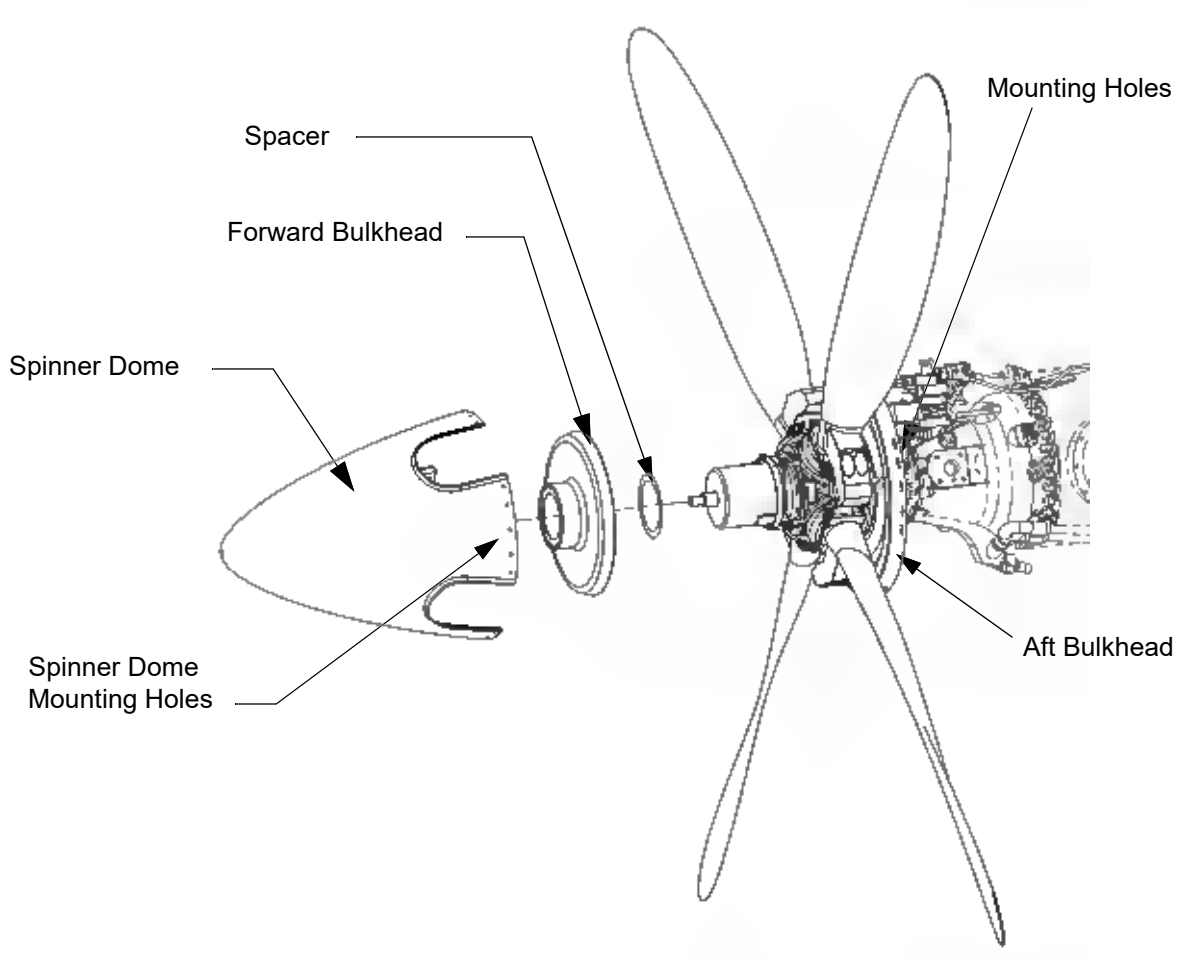

Figure 61-10.1: Spinner (Sheet 2 of 2)

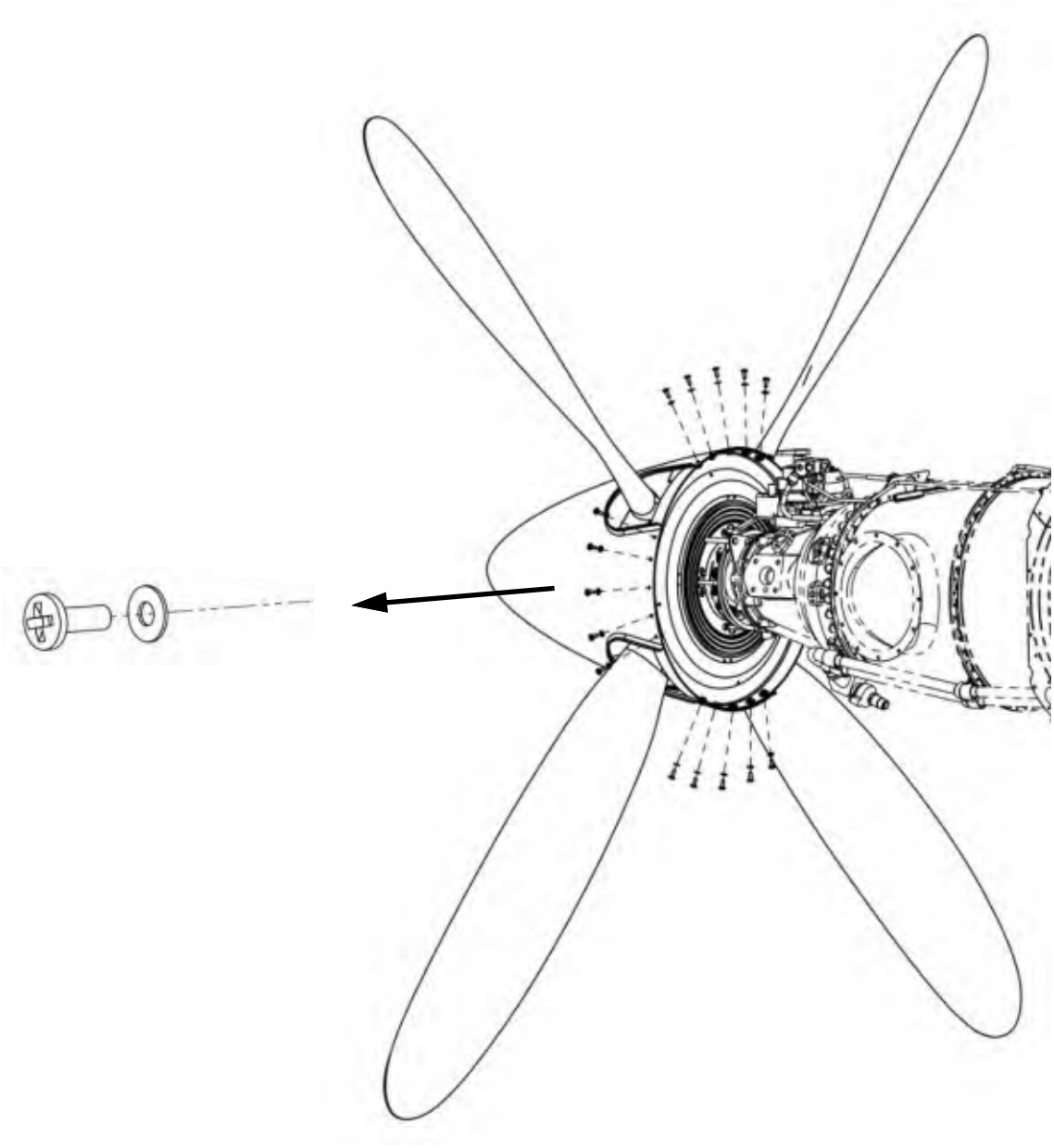

B. Propeller

(1) Removal

(a) Set the BATT 1 and BATT 2 switches to OFF.

(b) Set the fuel selector to OFF.

(c) Disconnect external electrical power from the airplane (refer to Chapter 24-40).

(d) Install wheel chocks on the main wheels.

(e) Remove the cowling (refer to Chapter 71-10).

(f) Remove the spinner.

(g) Remove the propeller (refer to the latest revision of the Hartzell Propeller, Inc. Propeller Owner's Manual No. 149).

(2) Installation

(a) Ensure the BATT 1 and BATT 2 switches are OFF.

(b) Ensure the fuel selector is OFF.

(c) Disconnect external electrical power from the airplane (refer to Chapter 24-40).

(d) Install the propeller (refer to the latest revision of the Hartzell Propeller, Inc. Propeller Owner's Manual No. 149, except as otherwise indicated). The inner diameter chamfer of the washer under the mounting bolts must be facing toward the bolt head. Washers without chamfer must be installed with the rolled edges toward the bolt head. Torque the propeller mounting bolts as follows:

Apply anti-seize thread compound (refer to MIL-PRF-83483) to the mounting bolts, then:

Torque the bolts to 40 ± 5 ft-lbs following sequence A, then
Torque the bolts to 80 ± 5 ft-lbs following sequence A, then
Torque the bolts to 100 to 105 ft-lbs following sequence B.

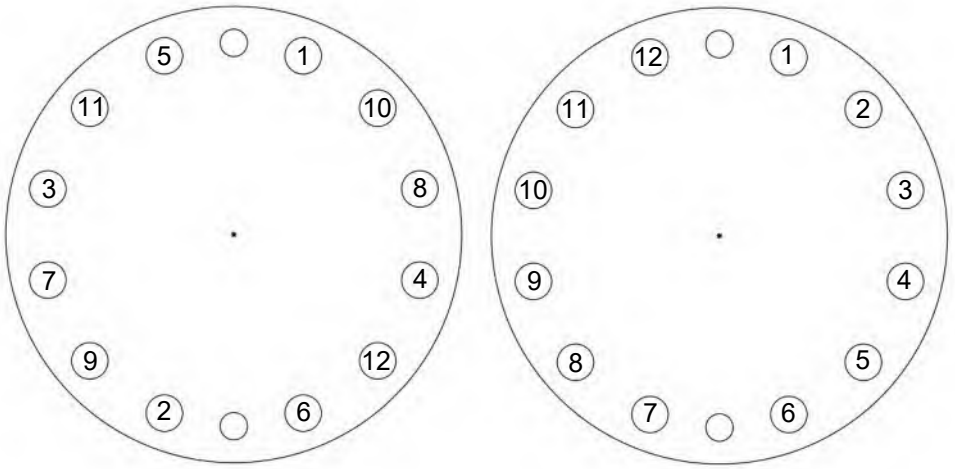

Sequence A Sequence B

(e) Safety wire the propeller mounting bolts together in pairs using 0.032 diameter or larger safety wire.

(f) Install the spinner.

(g) Install the cowling (refer to Chapter 71-10).

(3) Inspection - Blade Track

(a) Put the airplane on level ground. Do the blade track check procedures in a location with no wind.

(b) Set the BATT 1 and BATT 2 switches to OFF.

(c) Disconnect external electrical power from the airplane (refer to Chapter 24-40).

(d) Remove all personnel from the airplane then close the cabin door.

(e) Remove the propeller tie down or covers then check each blade for looseness in the hub.

(f) Put a chair, ladder, or other item to provide a fixed point of reference adjacent to the propeller arc/plane of rotation at the aft, outer edge.

(g) Rotate blades and check the distance between each blade and the fixed point of reference. The difference between each blade and point of reference should not exceed ± 0.125 inch (3.18 mm) or 0.25 inch (6.4 mm) total in the plane of rotation.

(h) Contact Epic Aircraft, LLC or Hartzell Propeller Inc. for instructions should propeller track be out of tolerance.

(4) Dynamic Balancing

(a) Refer to the latest version of the Hartzell Propeller, Inc. Propeller Owner's Manual No. 149 for balancing requirements and procedures.

Note: If the location of static balance weights has not been altered, subsequent removal of the dynamic balance weights will return the propeller to its original static balance condition.

(i) Install AN970 style washers to balance the spinner. Use only stainless or plated steel washers as dynamic balance weights on the spinner bulkhead.

(ii) Do not exceed maximum weight per location of 0.90 oz. (25.5 g). Split weights between hole locations if necessary.

Note: This is approximately equal to six AN970 style washers (0.188-inch ID, 0.875-inch OD, 0.063-inch thickness) (4.78 mm ID, 22.23 mm OD, 1.60 mm thickness).

(iii) Install weights using #10-32 or AN-3 type screws or bolts. Balance weight screws attached to the spinner bulkhead must protrude through the self-locking nuts or nut plates a minimum of one thread and a maximum of four threads. Installation torque is 30-36 in-lbs.

(iv) If reflective tape is used for dynamic balancing, remove the tape immediately upon completion. Tape that remains on the bulkhead will cause moisture to collect under the tape and cause corrosion that can permanently damage the blade.

(v) Make a record in the logbook of the number and location of dynamic balance weights and static balance weights, if they have been reconfigured.

Figure 61-10.2: Propeller

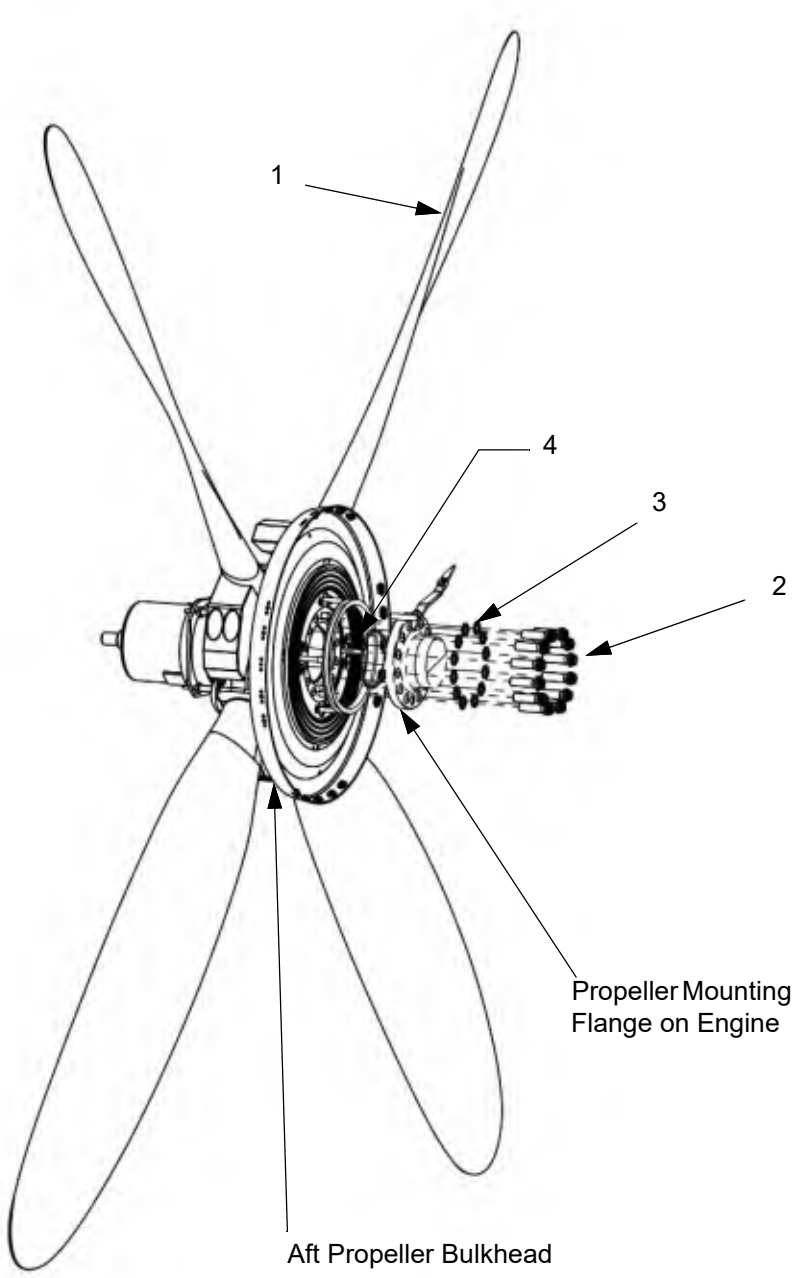

LEGEND

1. Propeller
2. Bolt
3. Washer
4. O-Ring

This Page Intentionally Left Blank

5 BLADED PROPELLER ASSEMBLY

1. Description

(SN: K011 and On, or K003 - K004 with SB-0017) This propeller assembly includes blades, hub, spinner, spinner bulkhead, and de-ice boots with energizing brush block. A propeller governor gives blade pitch control. A dump valve gives immediate release of propeller hub oil for full feathering activation. Blade pitch reverse is done with beta rods, a beta ring, carbon block, and lever.

2. Maintenance Practices

A. Spinner

(1) Removal

(a) Set the BATT 1 and BATT 2 switches to OFF.

(b) Disconnect external electrical power from the airplane (refer to Chapter 24-40).

(c) Install wheel chocks on the main wheels.

(d) Remove the screws and washers mounting the spinner dome to the spinner bulkhead.

Note: The spinner has been indexed at the factory to the correct position for best fit and minimum vibration. Always reinstall the spinner in the same orientation it had on removal by matching index markings. Look for index marks on the spinner and the bulkhead before removing the spinner. If none are found make index marks using a permanent marker.

(e) Carefully pull the spinner dome forward. Do not damage the blade shanks during spinner dome removal.

(f) Remove the forward bulkhead and spinner mounting spacers from the propeller hub.

(2) Installation

(a) Install the forward bulkhead mounting spacers onto the propeller hub. Ensure the forward bulkhead fits snugly on the hub.

(b) Remove or add spacers under the forward bulkhead so the spinner dome mounting holes are short of full alignment by 0.063 (+ 0.0005/- 0.010) inch. This will provide tension in the installation which improves spinner longevity by reducing wear causing vibration.

(c) Match index marks on the spinner dome and the spinner bulkhead then push the dome onto the spinner bulkhead. Do not damage the blade shanks.

(d) Install washers and screws. Tighten the screws finger tight.

(e) Put a fixed visible marker within 1/4 inch of the spinner dome tip. A ladder, tail stand, or similar will work. This will assist in aligning the tip of the spinner dome with the centerline of the propeller hub.

(f) Rotate the propeller by hand while watching the spinner dome tip and the fixed marker. Any misalignment will be easily seen.

(g) Gently bump the spinner dome tip in the direction required to align the tip with the propeller hub then rotate the propeller by hand. Continue this process until the spinner tip is aligned.

(h) Torque the screws.

Figure 61-11.1: Spinner

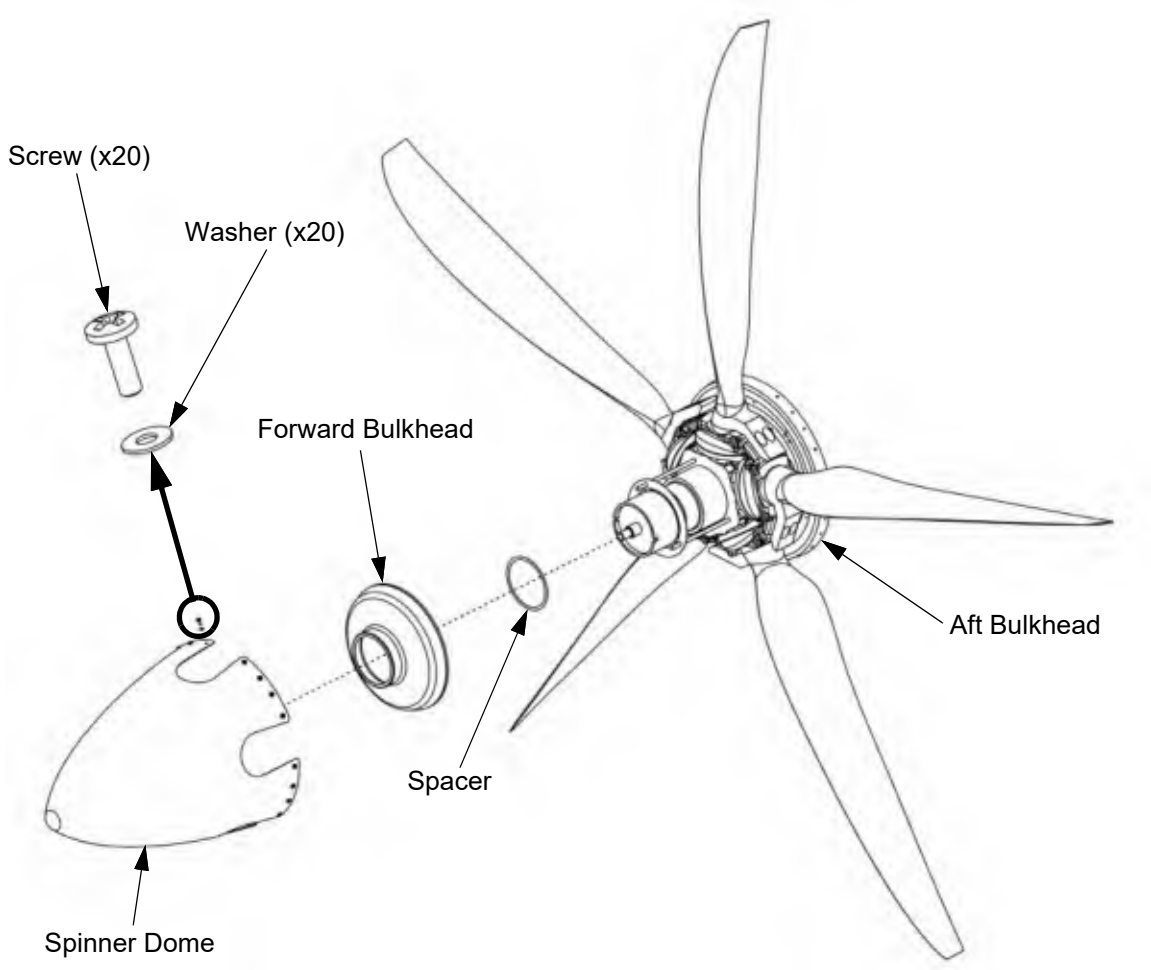

B. Propeller

(1) Removal

(a) Set the BATT 1 and BATT 2 switches to OFF.

(b) Set the fuel selector to OFF.

(c) Disconnect external electrical power from the airplane (refer to Chapter 24-40).

(d) Install wheel chocks on the main wheels.

(e) Remove the cowling (refer to Chapter 71-10).

(f) Remove the spinner.

(g) Remove the propeller (refer to the latest revision of the Hartzell Propeller, Inc. Propeller Owner's Manual No. 147).

(2) Installation

(a) Ensure the BATT 1 and BATT 2 switches are OFF.

(b) Ensure the fuel selector is OFF.

(c) Disconnect external electrical power from the airplane (refer to Chapter 24-40).

(d) Install the propeller (refer to the latest revision of the Hartzell Propeller, Inc. Propeller Owner's Manual No. 147, except as otherwise indicated). The inner diameter chamfer of the washer under the mounting bolts must be facing toward the bolt head. Washers without chamfer must be installed with the rolled edges toward the bolt head. Torque the propeller mounting bolts as follows:

Apply anti-seize thread compound (refer to MIL-PRF-83483) to the mounting bolts, then:

Torque the bolts to 40 ± 5 ft-lbs following sequence A, then
Torque the bolts to 80 ± 5 ft-lbs following sequence A, then
Torque the bolts to 100 to 105 ft-lbs following sequence B.

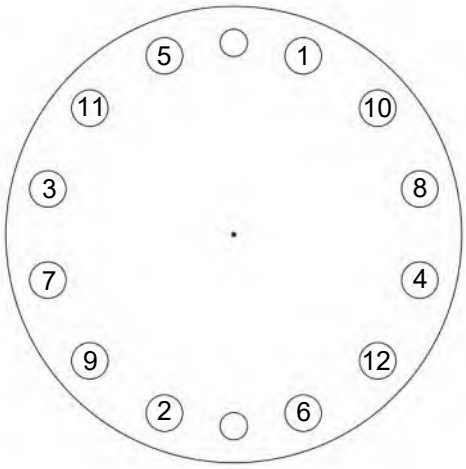

Sequence A

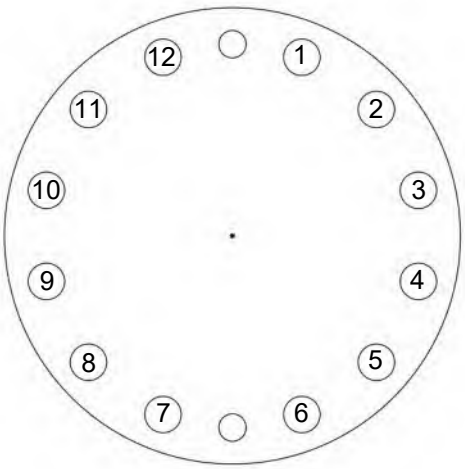

Sequence B

(e) Safety wire the propeller mounting bolts together in pairs using 0.032 diameter or larger safety wire.

(f) Install the spinner.

(g) Install the cowling (refer to Chapter 71-10).

Note: New and overhauled propellers must be re-lubricated within 2 hours of installation, refer to the latest version of Hartzell Propeller, Inc. Propeller Owner's Manual No. 147.

(3) Inspection - Blade Track

(a) Put the airplane on level ground. Do the blade track check procedures in a location with no wind.

(b) Set the BATT 1 and BATT 2 switches to OFF.

(c) Disconnect external electrical power from the airplane (refer to Chapter 24-40).

(d) Remove all personnel from the airplane then close the cabin door.

(e) Remove the propeller tie down or covers then check each blade for looseness in the hub.

(f) Put a chair, ladder, or other item to provide a fixed point of reference adjacent to the propeller arc/plane of rotation at the aft, outer edge.

(g) Rotate blades and check the distance between each blade and the fixed point of reference. The difference between each blade and point of reference should not exceed ± 0.125 inch (3.18 mm) or 0.25 inch (6.4 mm) total in the plane of rotation.

(h) Contact Epic Aircraft, LLC or Hartzell Propeller Inc. for instructions should propeller track be out of tolerance.

(4) Dynamic Balancing

(a) Refer to the latest version of the Hartzell Propeller, Inc. Propeller Owner's Manual No. 149 for balancing requirements and procedures.

Note: If the location of static balance weights has not been altered, subsequent removal of the dynamic balance weights will return the propeller to its original static balance condition.

(i) Install AN970 style washers to balance the spinner. Use only stainless or plated steel washers as dynamic balance weights on the spinner bulkhead.

(ii) Do not exceed maximum weight per location of 1.6 oz (45.0 g). Split weights between hole locations if necessary.

Note: This is approximately equal to six AN970 style washers (0.188-inch ID, 0.875-inch OD, 0.063-inch thickness) (4.78 mm ID, 22.23 mm OD, 1.60 mm thickness).

(iii) Install weights using #10-32 or AN-3 type screws or bolts. Balance weight screws attached to the spinner bulkhead must protrude through the self-locking nuts or nut plates a minimum of one thread and a maximum of four threads. Installation torque is 30-36 in-lbs.

(iv) If reflective tape is used for dynamic balancing, remove the tape immediately upon completion. Tape that remains on the bulkhead will cause moisture to collect under the tape and cause corrosion that can permanently damage the blade.

(v) Make a record in the logbook of the number and location of dynamic balance weights and static balance weights, if they have been reconfigured.

Figure 61-11.2: Propeller

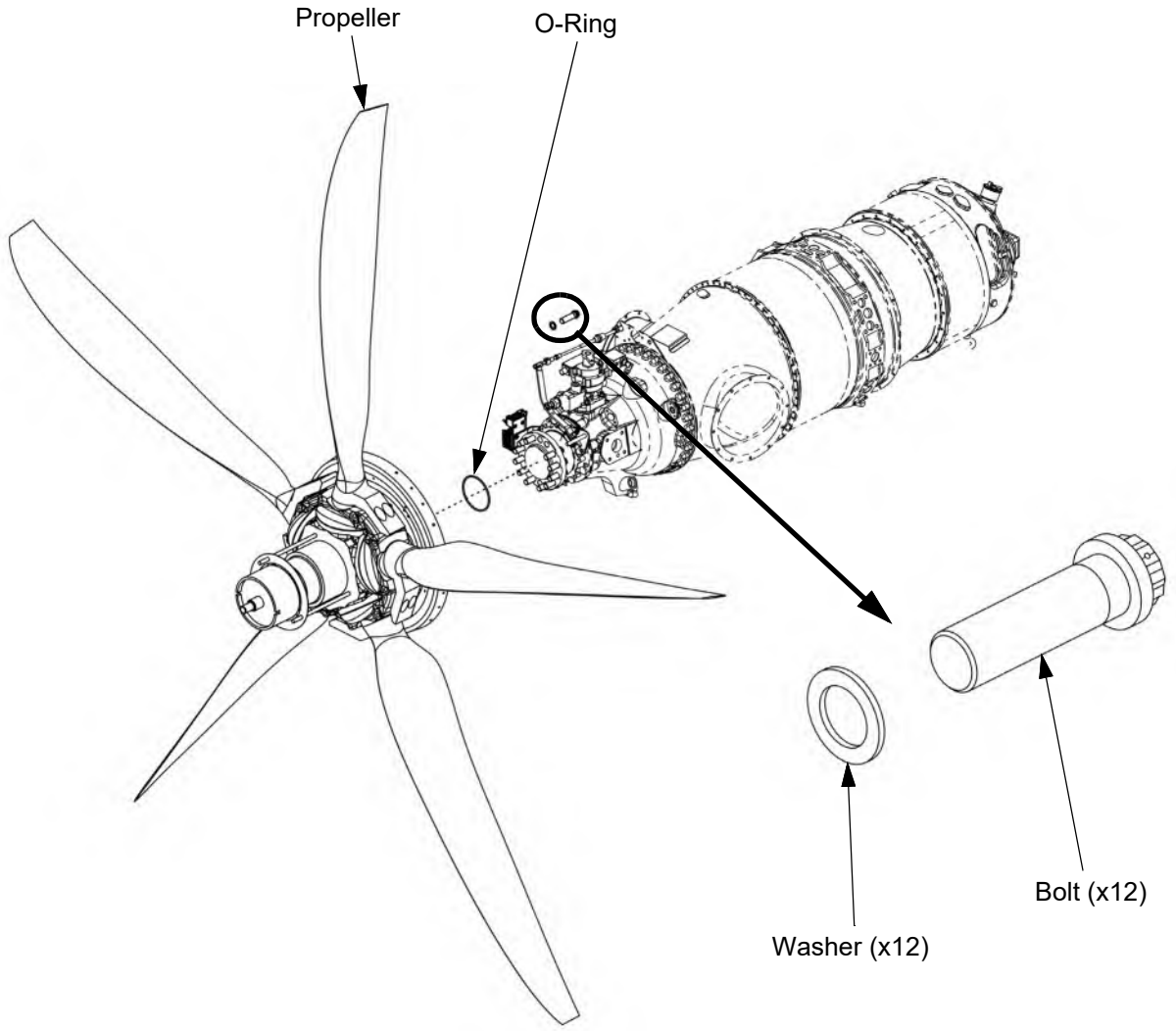

CONTROLLING

1. Description

This propeller assembly includes blades, hub, spinner, spinner bulkhead, de-ice boots with energizing brush block, and lightning protection. A propeller governor provides blade pitch control. A dump valve permits immediate release of propeller hub oil for full feathering activation. Blade pitch reverse is done with beta rods, a beta ring, carbon block, and lever.

2. Maintenance Practices

A. Propeller Governor

(1) Removal

(a) Set the BATT 1 and BATT 2 switches to OFF.

(b) Disconnect external electrical power from the airplane (refer to Chapter 24-40).

(c) Install wheel chocks on the main wheels.

(d) Remove the cowling (refer to Chapter 71-10).

(e) Disconnect the governor control cable from the governor control arm.

(f) For governor removal refer to the Pratt &Whitney Maintenance Manual for Turboprop Gas Turbine Engine, Manual No. 3036132.

(2) Installation

(a) For governor installation, refer to the Pratt &Whitney Maintenance Manual for Turboprop Gas Turbine Engine, Manual No. 3036132.

(b) Connect the governor control cable to the governor control arm.

(c) Install the cowling (refer to Chapter 71-10).

(3) Inspection

Refer to the latest revision of Pratt &Whitney Maintenance Manual for Turboprop Gas Turbine Engine, Manual No. 3036132.

(4) Adjustment

Refer to the latest revision of Pratt &Whitney Maintenance Manual for Turboprop Gas Turbine Engine, Manual No. 3036132.

B. Propeller Overspeed Governor

(1) Removal

(a) Set the BATT 1 and BATT 2 switches to OFF.

(b) Disconnect external electrical power from the airplane (refer to Chapter 24-40).

(c) Install wheel chocks on the main wheels.

(d) Remove the cowling (refer to Chapter 71-10).

(e) Disconnect the wiring harness from the overspeed governor.

(f) Remove the nuts and washers attaching the overspeed governor to the accessory pad on the engine.

(g) Note the orientation of the overspeed governor then remove it from the engine.

(h) Remove the gasket between the overspeed governor and the pad.

(i) Plug or cap the hole in the pad to keep out dirt or contamination.

(2) Installation

(a) Uncap or unplug the hole in the accessory pad.

(b) Install a new gasket onto the accessory pad.

(c) Lubricate the splines on the overspeed governor drive using Plastilube #3 grease.

(d) Orient the overspeed governor then slide it onto the studs of the accessory pad.

(e) Aline the splines on the overspeed governor drive with the splines in the accessory pad.

(f) Attach the overspeed governor to the accessory pad using washers and nuts. Torque the nuts 125 to 135 in-lbs.

(g) Install the cowling (refer to Chapter 71-10).

(3) Inspection/Check

(a) With the engine running and the propeller lever full forward, advance the power levers until the propeller speed is 1700 RPM.

CAUTION: DO NOT exceed the engine torque limits during the test.

(b) Depress and hold the PROP GOV TEST switch. The propeller speed should reduce to 1600 ± 50 RPM RPM.

Note: If the overspeed governor fails to govern in the range specified above, replace the governor or have it repaired at a qualified repair station.

(c) Release the PROP GOV TEST switch. Propeller speed should return to 1700 RPM.

(d) Set the power lever to idle then release the PROP GOV TEST switch.

(4) Adjustment

The overspeed governor is preset at the factory to govern at 104% N_2 speed (approximately 1768 propeller RPM) and should not require adjustment.

Figure 61-20.1: Overspeed Governor

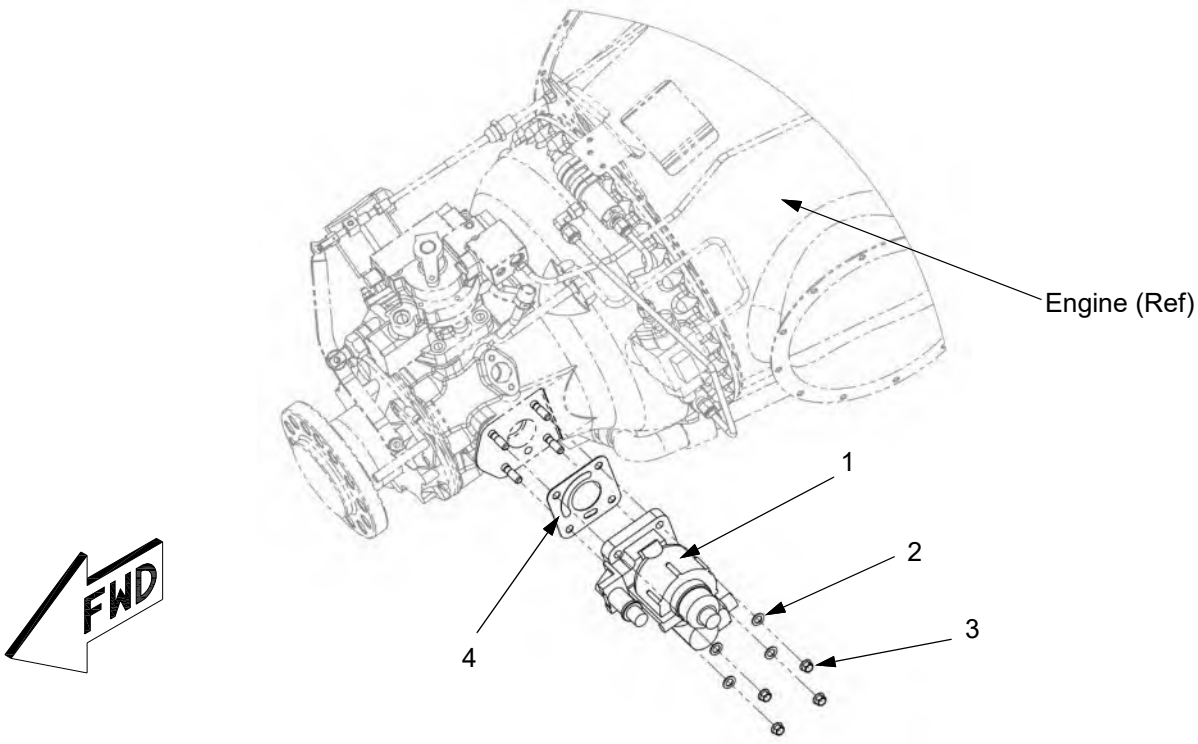

LEGEND
1. Overspeed Governor
2. Washer
3. Nut
4. Gasket

This Page Intentionally Left Blank

CHAPTER
71

Power Plant

This Page Intentionally Left Blank

List of Effective Pages

Chapter/Section	Page Number	Effective Date
71-Title	Page 1	02 Jan 2020
71-Title	Page 2	02 Jan 2020
71-LOEP	Page 1	08 Sep 2026
71-LOEP	Page 2	08 Apr 2024
71-LOEP	Page 3	08 Sep 2026
71-LOEP	Page 4	13 Apr 2020
71-TOC	Page 1	02 Jan 2020
71-TOC	Page 2	02 Jan 2020
71-00	Page 1	13 Apr 2020
71-00	Page 2	13 Apr 2020
71-00	Page 3	13 Apr 2020
71-00	Page 4	13 Apr 2020
71-00	Page 5	16 May 2022
71-00	Page 6	16 May 2022
71-00	Page 7	16 May 2022
71-00	Page 8	16 May 2022
71-00	Page 9	16 May 2022
71-00	Page 10	16 May 2022
71-00	Page 11	16 May 2022
71-00	Page 12	16 May 2022
71-00	Page 13	16 May 2022
71-00	Page 14	16 May 2022
71-00	Page 15	10 Jul 2025
71-00	Page 16	10 Jul 2025
71-00	Page 17	10 Jul 2025
71-00	Page 18	10 Jul 2025
71-00	Page 19	16 May 2022
71-00	Page 20	16 May 2022
71-00	Page 21	16 May 2022
71-00	Page 22	10 Jul 2025
71-00	Page 23	16 May 2022
71-00	Page 24	16 May 2022
71-00	Page 25	16 May 2022
71-00	Page 26	16 May 2022
71-10	Page 1	20 Oct 2023
71-10	Page 2	20 Oct 2023
71-10	Page 3	20 Oct 2023
71-10	Page 4	20 Oct 2023
71-10	Page 5	20 Oct 2023
71-10	Page 6	20 Oct 2023

71-10 ..... Page 7 ..... 20 Oct 2023
71-10 ..... Page 8 ..... 20 Oct 2023

71-20 ..... Page 1 ..... 02 Jan 2020
71-20 ..... Page 2 ..... 02 Jan 2020
71-20 ..... Page 3 ..... 08 Apr 2024
71-20 ..... Page 4 ..... 08 Apr 2024
71-20 ..... Page 5 ..... 08 Apr 2024
71-20 ..... Page 6 ..... 08 Apr 2024

71-30 ..... Page 1 ..... 02 Jan 2020
71-30 ..... Page 2 ..... 02 Jan 2020
71-30 ..... Page 3 ..... 02 Jan 2020
71-30 ..... Page 4 ..... 02 Jan 2020
71-30 ..... Page 5 ..... 02 Jan 2020
71-30 ..... Page 6 ..... 02 Jan 2020
71-30 ..... Page 7 ..... 02 Jan 2020
71-30 ..... Page 8 ..... 02 Jan 2020
71-30 ..... Page 9 ..... 02 Jan 2020
71-30 ..... Page 10 ..... 02 Jan 2020
71-30 ..... Page 11 ..... 02 Jan 2020
71-30 ..... Page 12 ..... 02 Jan 2020
71-30 ..... Page 13 ..... 02 Jan 2020
71-30 ..... Page 14 ..... 02 Jan 2020
71-30 ..... Page 15 ..... 02 Jan 2020
71-30 ..... Page 16 ..... 02 Jan 2020
71-30 ..... Page 17 ..... 02 Jan 2020
71-30 ..... Page 18 ..... 02 Jan 2020
71-30 ..... Page 19 ..... 02 Jan 2020
71-30 ..... Page 20 ..... 02 Jan 2020

71-50 ..... Page 1 ..... 10 Jul 2025
71-50 ..... Page 2 ..... 20 Oct 2023
71-50 ..... Page 3 ..... 20 Oct 2023
71-50 ..... Page 4 ..... 20 Oct 2023
71-50 ..... Page 5 ..... 20 Oct 2023
71-50 ..... Page 6 ..... 20 Oct 2023
71-50 ..... Page 7 ..... 20 Oct 2023
71-50 ..... Page 8 ..... 20 Oct 2023
71-50 ..... Page 9 ..... 20 Oct 2023
71-50 ..... Page 10 ..... 20 Oct 2023
71-50 ..... Page 11 ..... 20 Oct 2023
71-50 ..... Page 12 ..... 20 Oct 2023
71-50 ..... Page 13 ..... 20 Oct 2023
71-50 ..... Page 14 ..... 20 Oct 2023
71-50 ..... Page 15 ..... 20 Oct 2023

71-50 ..... Page 16 ..... 20 Oct 2023
71-50 ..... Page 17 ..... 20 Oct 2023
71-50 ..... Page 18 ..... 20 Oct 2023
71-50 ..... Page 19 ..... 20 Oct 2023
71-50 ..... Page 20 ..... 20 Oct 2023
71-50 ..... Page 21 ..... 20 Oct 2023
71-50 ..... Page 22 ..... 20 Oct 2023

71-60 ..... Page 1 ..... 16 May 2022
71-60 ..... Page 2 ..... 16 May 2022
71-60 ..... Page 3 ..... 16 May 2022
71-60 ..... Page 4 ..... 08 Sep 2026
71-60 ..... Page 5 ..... 08 Sep 2026
71-60 ..... Page 6 ..... 08 Sep 2026
71-60 ..... Page 7 ..... 08 Sep 2026
71-60 ..... Page 8 ..... 08 Sep 2026
71-60 ..... Page 9 ..... 08 Sep 2026
71-60 ..... Page 10 ..... 08 Sep 2026
71-60 ..... Page 11 ..... 08 Sep 2026
71-60 ..... Page 12 ..... 08 Sep 2026

71-70 ..... Page 1 ..... 02 Jan 2020
71-70 ..... Page 2 ..... 02 Jan 2020
71-70 ..... Page 3 ..... 02 Jan 2020
71-70 ..... Page 4 ..... 02 Jan 2020
71-70 ..... Page 5 ..... 02 Jan 2020
71-70 ..... Page 6 ..... 02 Jan 2020
71-70 ..... Page 7 ..... 02 Jan 2020
71-70 ..... Page 8 ..... 02 Jan 2020

This Page Intentionally Left Blank

Table of Contents

List of Effective Pages ..... 71-LOEP / Page 1
Table of Contents ..... 71-TOC / Page1

Paragraph **Page Number**

Power Plant

1. General ..... 71-00 / Page 1
2. Troubleshooting ..... 71-00 / Page 1
3. Maintenance Practices ..... 71-00 / Page 1
   - A. New Engine Build-Up ..... 71-00 / Page 1
   - B. Engine ..... 71-00 / Page 2
   - C. Engine Return ..... 71-00 / Page 4
4. Checkout Procedures ..... 71-00 / Page 5
   - A. Manual Override System Static Check ..... 71-00 / Page 5
   - B. Fuel Condition Linkage Static Check ..... 71-00 / Page 6
   - C. Propeller Linkage Static Check ..... 71-00 / Page 7
   - D. Power Linkage Static Check ..... 71-00 / Page 9
   - E. Beta Valve and Sliding Ng Reset Link Static Check ..... 71-00 / Page 12
   - F. Pre-Operational Check ..... 71-00 / Page 13
   - G. Pre-Start Checks ..... 71-00 / Page 13
   - H. Engine Starting ..... 71-00 / Page 14
   - I. High Idle Ng Limits Check ..... 71-00 / Page 15
   - J. Propeller RPM Maximum Check ..... 71-00 / Page 15
   - K. Propeller RPM maximum Reverse Check ..... 71-00 / Page 15
   - L. Manual Override System Operation Check ..... 71-00 / Page 16
   - M. Low “Ground” Idle Ng Limits Check ..... 71-00 / Page 16
   - N. Feathering Operation Check ..... 71-00 / Page 17
   - O. Oil Pressure Check ..... 71-00 / Page 17
   - P. Engine Performance Check ..... 71-00 / Page 17
   - Q. Hot Section Inspection (HSI) ..... 71-00 / Page 23
   - R. Dry Motoring Run ..... 71-00 / Page 23
   - S. Engine Shutdown ..... 71-00 / Page 24
   - T. Post-Shutdown Checks ..... 71-00 / Page 24

Cowling

1. Description ..... 71-10 / Page 1
2. Maintenance Practices ..... 71-10 / Page 1
   - A. Cowling ..... 71-10 / Page 1
   - B. Engine Inlet Lip ..... 71-10 / Page 3

Mounts

1. Description ..... 71-20 / Page 1
2. Maintenance Practices ..... 71-20 / Page 1
   A. Engine Vibration Isolators ..... 71-20 / Page 1
   B. Upper Engine Mount ..... 71-20 / Page 3
   C. Lower Engine Mount ..... 71-20 / Page 3

Fireseals and Shrouds

1. Description ..... 71-30 / Page 1
2. Maintenance Practices ..... 71-30 / Page 1
   A. Forward Plenum Firewall ..... 71-30 / Page 1
   B. Aft Plenum Firewall ..... 71-30 / Page 9
   C. Firewall Plate ..... 71-30 / Page 12
   D. Firewall Blanket Penetration Panels ..... 71-30 / Page 15
   E. Engine Mount Wraps ..... 71-30 / Page 15
   F. Inspection ..... 71-30 / Page 20

Electrical Harness

1. Description ..... 71-50 / Page 1
2. Maintenance Practices ..... 71-50 / Page 1
   A. Electrical Harness ..... 71-50 / Page 1
   B. Lightning Protection Grounding ..... 71-50 / Page 20

Engine Air Intakes

1. Description ..... 71-60 / Page 1
2. Maintenance Practices ..... 71-60 / Page 1
   A. Inertial Separator ..... 71-60 / Page 1
   B. Plenum ..... 71-60 / Page 4

Engine Drains

1. Description ..... 71-70 / Page 1
2. Maintenance Practices ..... 71-70 / Page 1
   A. Engine Drains ..... 71-70 / Page 1
   B. Overboard Drain ..... 71-70 / Page 7

POWER PLANT

1. General

This chapter gives information and procedures for the engine, engine mount, air intakes, drains, and cowling.

The airplane has a Pratt & Whitney PT6A-67A turbine engine that has two shafts and a 4-stage axial compressor driven by a single-stage centrifugal compressor turbine with an independent shaft coupling the power turbine to the propeller through an epicyclic concentric reduction gear-box. The engine generates 1200 SHP at 1700 RPM.

2. Troubleshooting

Refer to the latest revision of the Pratt &Whitney Maintenance Manual for Turboprop Gas Turbine Engine, Manual No. 3036132.

3. Maintenance Practices

A. New Engine Build-Up

Engine build up is installing accessories and equipment on a new engine which were removed from the old engine. When a new engine is received, it should be removed from the shipping container then installed on an engine stand. Refer to Pratt and Whitney PT6A-67A Engine Maintenance Manual for additional information and procedures.

(1) After the engine has been removed from the shipping container, attach a suitable engine sling to the forward and aft engine hoist lugs.
(2) Connect an engine hoist to the eye of the engine sling.
(3) Raise the engine hoist until the engine is at a level that will let it to fit onto the engine stand.
(4) Attach engine stand adapter brackets to the engine at the engine mount isolator holes.
(5) Lower the engine into the engine stand then attach the engine stand adapter brackets to the engine stand.
(6) Lower the engine hoist then remove the engine sling from the engine hoist lugs.
(7) Install the turbine tachometer generator, N_1 (refer to Chapter 77-40).
(8) Connect the propeller reversing interconnect linkage to the engine (refer to Chapter 61-10).
(9) Connect the fitting that runs between the fuel boost pump and the oil-to-fuel heater.
(10) Install the exhaust stacks.
(11) Install the propeller tachometer generator, N_2 (refer to Chapter 77-40).
(12) Install the oil cooler (refer to Chapter 79-20).
(13) Install the propeller overspeed governor (refer to Chapter 61-20).

(14) Install the torque pressure transducer. (refer to Chapter 77-40 and 61-21).

(15) Install the starter/generator (refer to Chapter 24-30).

(16) Install the alternator.

(17) Install the fuel flow transmitter, oil temperature bulb, and oil pressure transducer (refer to Chapter 77-40).

(18) Install the hydraulic pump (refer to Chapter 29-10).

B. Engine

(1) Removal

Note: Plumbing and electrical connections should be tagged and identified to ensure correct installation. Caps and covers should be used on all openings, hoses, and ports to prevent contamination. Note position of all clamps and standoffs before removing for re-installation.

(a) Secure the tail of the airplane using a tail stand.

(b) Set all electrical switches in the cockpit to OFF.

(c) Pull all the engine circuit breakers.

(d) Disconnect external electrical power from the airplane (refer to Chapter 24-40).

(e) Set the fuel selector to OFF.

(f) Remove the cowling.

(g) Disconnect the aircraft batteries by disconnecting the negative battery cables first then the positive battery cables.

Note: To reduce the possibility of personal injury and equipment damage, disconnect the negative battery cable before disconnecting the positive battery cable.

(h) Insulate the battery terminals.

(i) Drain the fuel filter and the fuel lines. Install caps or plugs to keep contamination out of the system.

(j) Remove the propeller.

(k) Disconnect the electrical harness at the starter/generator.

(l) Disconnect the electrical connectors to the fuel flow, oil, and temperature sensors.

(m) Remove the exhaust stacks.

(n) Remove the inertial separators.

(o) Attach a suitable engine sling to the forward and aft engine hoist lugs.The forward engine hoisting lug is on the upper forward side of the compressor inlet case. The aft engine hoisting lug is on the upper side of the reduction gearbox to exhaust duct flange.

(p) Connect an engine hoist to the eye of the engine sling then support the weight of the engine.

(q) Remove the engine air plenum.

Note: The plenum forward and aft firewalls should only have to be removed if the engine is to be returned to Pratt & Whitney

(r) Remove all engine drain tubes and hoses.

(s) Remove the engine oil cooler.

(t) Disconnect the bleed air hose.

(u) Disconnect the engine control cabling and linkages.

(v) With the weight of the engine supported by the hoist, remove the upper isolator mount bolts then remove the upper half of the engine mount.

(w) Remove the engine from the airplane.

(2) Installation

(a) Attach a suitable engine sling to the engine hoist lugs. The forward engine hoisting lug is on the upper forward side of the compressor inlet case. The aft engine hoisting lug is on the upper side of the reduction gearbox to exhaust duct flange.

(b) Put a suitable engine hoist directly above the eye of the engine sling.

(c) Attach the engine hoist to the engine sling then raise the engine hoist until the weight of the engine is supported by the engine sling.

(d) Remove the engine stand adapter brackets from the engine.

(e) Install the five engine mount vibration isolators on the engine using the five engine mount bolts. Use new gaskets and torque the engine mount bolts 225 to 300 in-lbs. Safety wire the engine mount bolts.

(f) Remove the upper engine truss mount bracket by removing the fore and aft upper bolts that hold upper mount truss assembly in place.

(g) Adjust the engine hoist and engine truss mount so that the holes in the vibration isolators line up with the holes in the engine truss mount.

(h) Assemble the vibration isolators then install the isolator mount bolts (refer to Chapter 71-20). Torque the nut on the isolator mount bolts 450-500 in-lbs.

(i) Install the upper engine truss assembly then attach it using fore and aft bolts. Safety as required.

(j) Install all engine drain hoses and drain tubing (refer to Chapter 71-70).

(k) Connect the engine wiring harness to the firewall (refer to Chapter 71-50). Safety as required.

(l) Install the bleed air lines and tubing.

(m) Remove the inlet air screen cover assembly.

(n) Install the engine air plenum (refer to Chapter 71-60).

(o) Install the inertial separators.

(p) Install the engine oil cooler and support brackets (refer to Chapter 79-00).

(q) Install the propeller.

(r) Install the clamps and brackets for attaching the engine control cables.

(s) Connect the propeller control cable to the propeller governor. Attach the cable and safety components as necessary.

(t) Install the power control cable mounting bracket.

(u) Attach the ignition exciter to the battery tray (refer to Chapter 74-10).

(v) Attach the engine electrical harness to the engine components (refer to Chapter 71-50).

C. Engine Return

When an engine is returned to Pratt & Whitney, the following steps must be done to prepare the engine for shipment. Refer to the latest revision of the Pratt &Whitney Maintenance Manual for Turboprop Gas Turbine Engine, Manual No. 3036132 for specific instructions on preparing the engine for shipping.

(1) All openings, ports, bosses, and lines must be capped, covered, or plugged.

(2) All electrical connections must be taped or covered.

(3) The propeller hub must be capped or plugged.

(4) The exhaust ports and engine inlet screen must be capped, covered or plugged.

(5) All loose components and linkages must be secured to prevent movement.

(6) The ignition exciter must be returned with the engine.

(7) The engine log book must be returned with the engine. Put all paperwork in a plastic bag attached to the engine using tie wraps.

(8) Use the new engine shipping container to return the old engine.

(9) Follow Pratt and Whitney procedures to attach the engine to the shipping container.

D. Engine Overhaul

Refer to the latest revision of the Pratt &Whitney Maintenance Manual for Turboprop Gas Turbine Engine, Manual No. 3036132 for additional information and procedures.

4. Checkout Procedures

A. Manual Override System Static Check

Do the following steps with the engine shutdown.

(1) Make sure the power lever is against the aft idle gate.
(2) Make sure the MAN OVRD control lever is in the normal position (stowed and locked).
(3) Ensure the manual override lever on the FCU contacts the stop at the normal position.
(4) Set MAN OVRD control lever in the control quadrant to the maximum override position.
(5) Make sure the MAN OVRD control lever does not bind and the manual override lever on the FCU contacts the stop at the maximum override position.

Note: There should be some resistance to movement of the MAN OVRD control lever in the control quadrant.

(6) If either stop on the FCU is not reached check and adjust the airframe rigging.

Figure 71-0.1: Manual Override Static Check

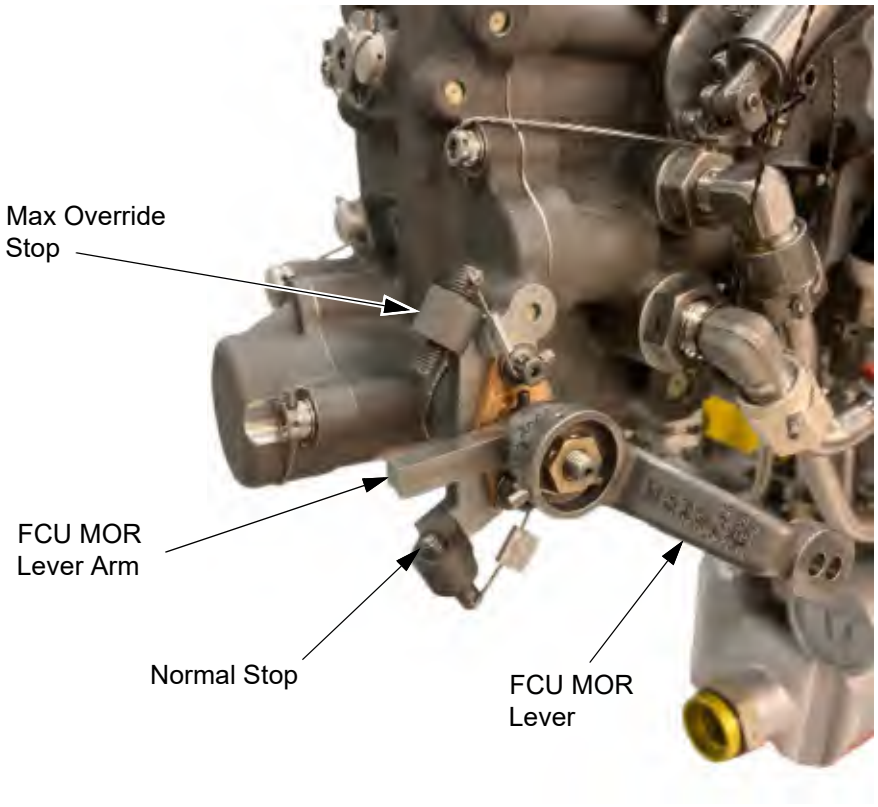

B. Fuel Condition Linkage Static Check

Do the following steps with the engine shutdown.

(1) Set the fuel condition lever to the FUEL CUTOFF position.
(2) Make sure the FCU fuel condition lever contacts the fuel cutoff stop.
(3) Set the fuel condition lever to the HIGH idle position.
(4) Make sure the FCU fuel condition lever contacts the HIGH idle stop.
(5) Set the fuel condition lever to the LOW idle position.
(6) Make sure the FCU condition lever rigging slot lines up with the FCU body rigging hole using a 3/16” (0.1875” - 0.1450”) rig pin.
(7) If either stop on the FCU is not reached check and adjust the airframe rigging.

Figure 71-0.2: Fuel Condition Linkage Static Check

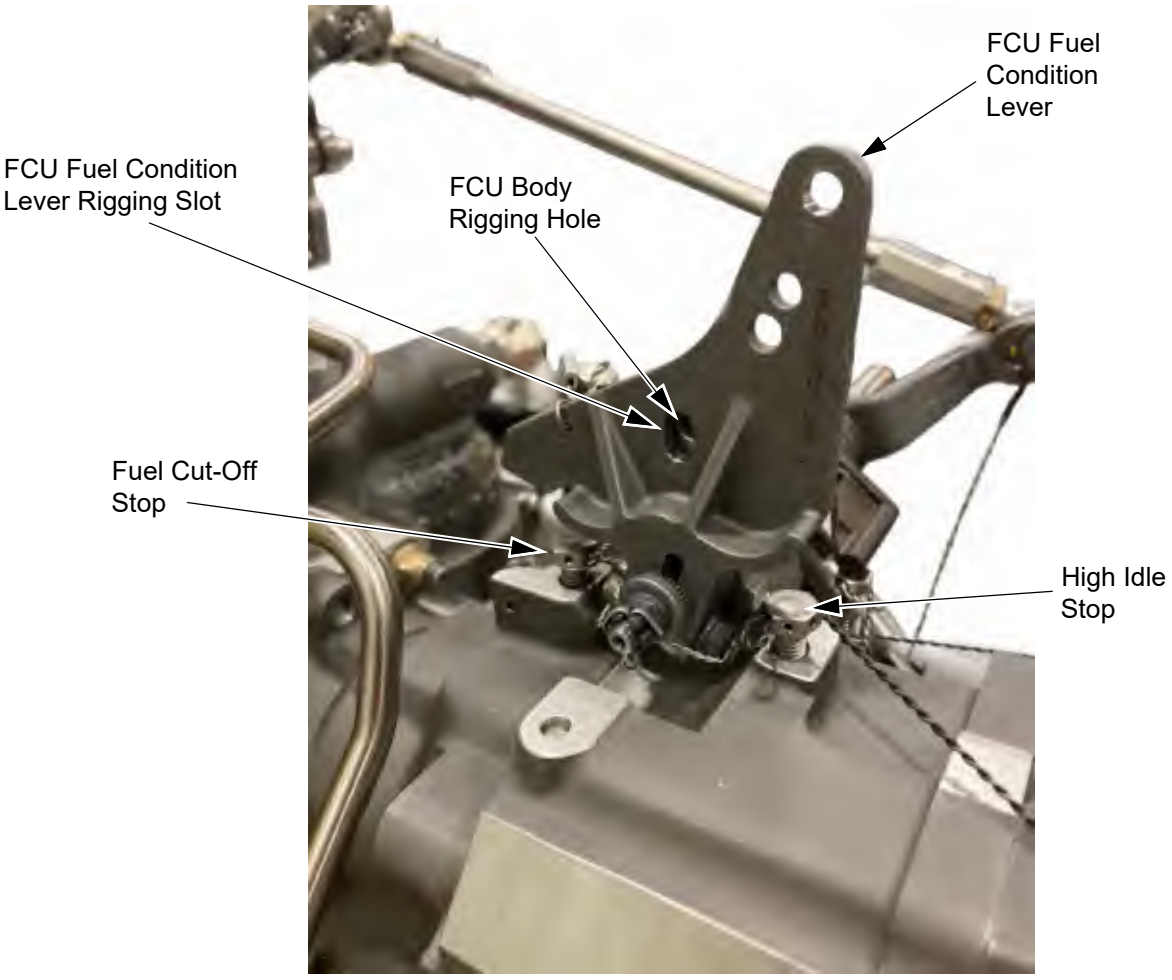

C. Propeller Linkage Static Check

Do the following steps with the engine shutdown.

(1) Make sure the PROP lever is in FEATHER.

(2) Verify the propeller governor unit (PGU) lever on the propeller governor fully depresses and bottoms out with pressure on the feathering valve plunger.

Note: The PGU lever on the propeller governor must fully depress the PGU feathering valve plunger before the PROP lever contacts the quadrant trim panel.

(3) Set the PROP lever to the MAX RPM position.

(4) Verify the PGU lever on the propeller governor contacts the maximum speed stop.

Note: The PGU lever on the propeller governor must fully depress the max RPM stop on the PGU before the PROP lever contacts the quadrant trim panel.

(5) If either stop is not reached check and adjust the airframe rigging.

(6) With the cowling installed on the aircraft, move the cockpit prop lever from feather to maximum RPM and verify that there is no interference between the top cowl and PGU lever with attached push-pull cable throughout the entire travel.

Figure 71-0.3: Propeller Linkage Static Check

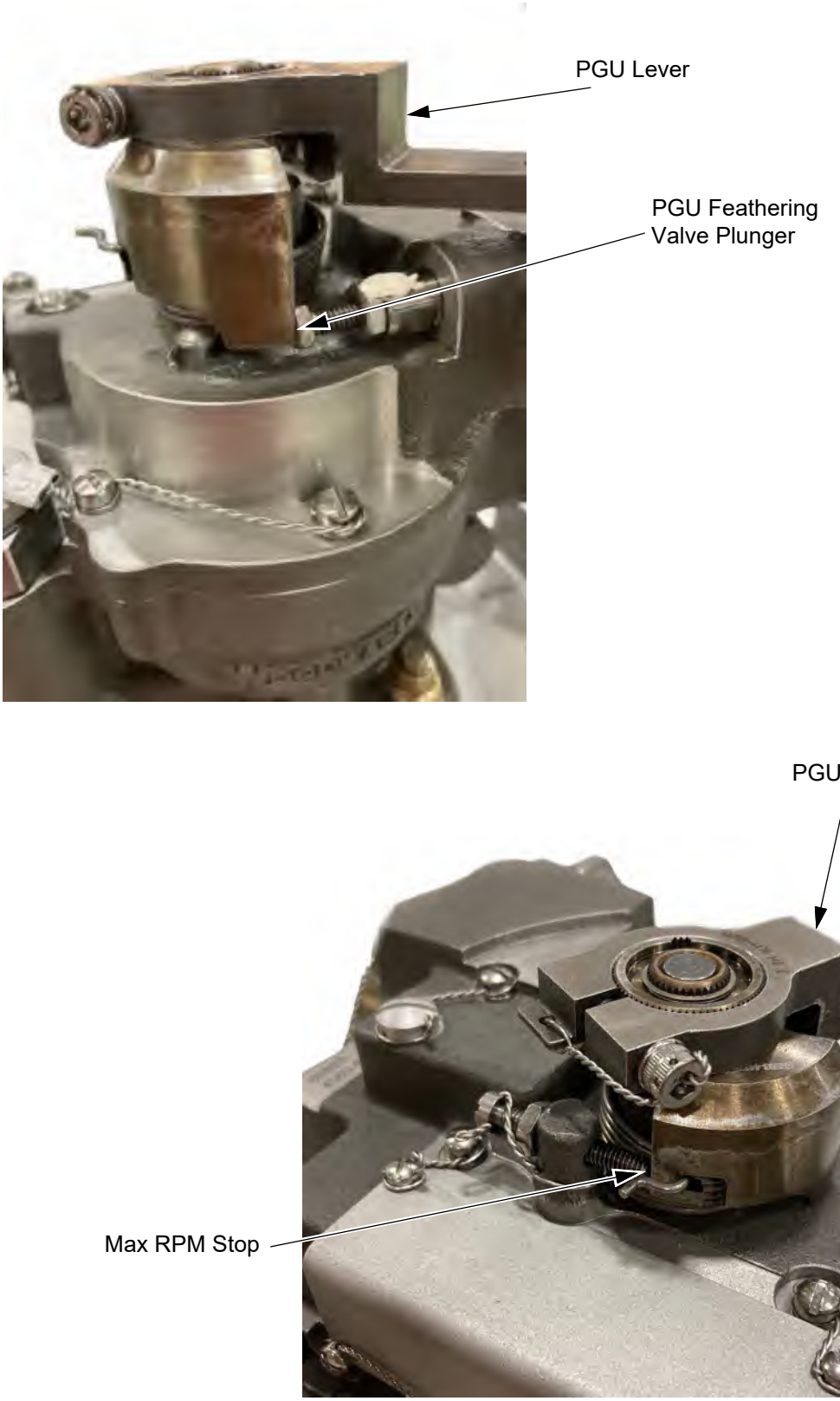

D. Power Linkage Static Check

CAUTION: Do not move the cockpit power lever into max reverse (beta) position without first disconnecting the push pull cable from the prop reversing cam. Failure to do so can result in damage to the linkage.

(1) Detach the rear push pull cable clevis (remove MS9245-23 cotter pin) from the propeller reversing cam as to enable reverse (beta) operation of the cambox. Note the bolt hole position for re-installation.

Note: Alternately, detach the forward push pull cable clevis from the propeller reversing lever as to enable reverse (beta) operation of the cambox.

(2) Put the cockpit power lever in the low idle position (against quadrant gate).

(3) Verify the rigging hole in the rigging plate lines up with the rigging holes in the cambox input lever and the propeller reversing cam bracket using an #41 drill bit.

(4) Put the cockpit power lever in the high idle position (max forward).

(5) Verify the FCU lever arm is contacting the max forward NG stop on the FCU.

(6) Put the cockpit power lever in the max reverse (beta) position.

(7) Verify the FCU lever arm is contacting the max reverse NG stop on the FCU.

(8) If either stop is not reached check and adjust the airframe rigging.

(9) Reattach the push pull cable clevis and install a new MS9245-23 cotter pin.

(10) Make sure to use the same bolt hole position in the propeller reversing cam it was removed from.

Figure 71-0.4: Power Linkage Static Check (Sheet 1 of 2)

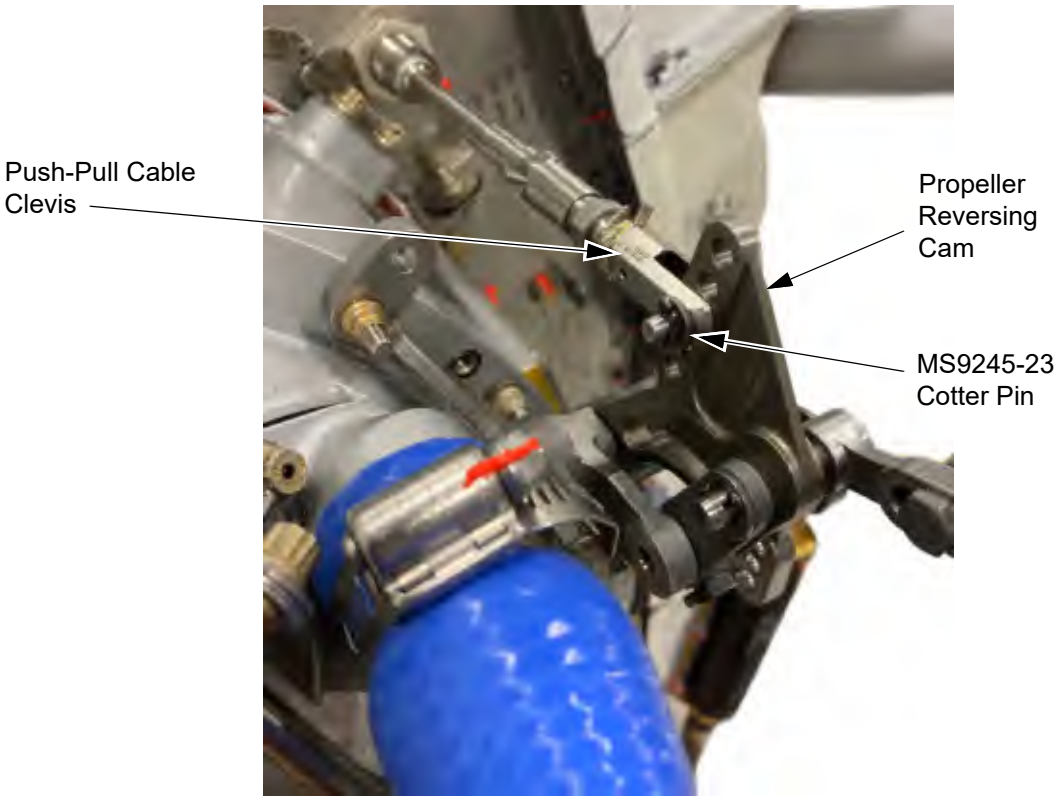



Figure 71-00.4: Power Linkage Static Check (Sheet 2 of 2)

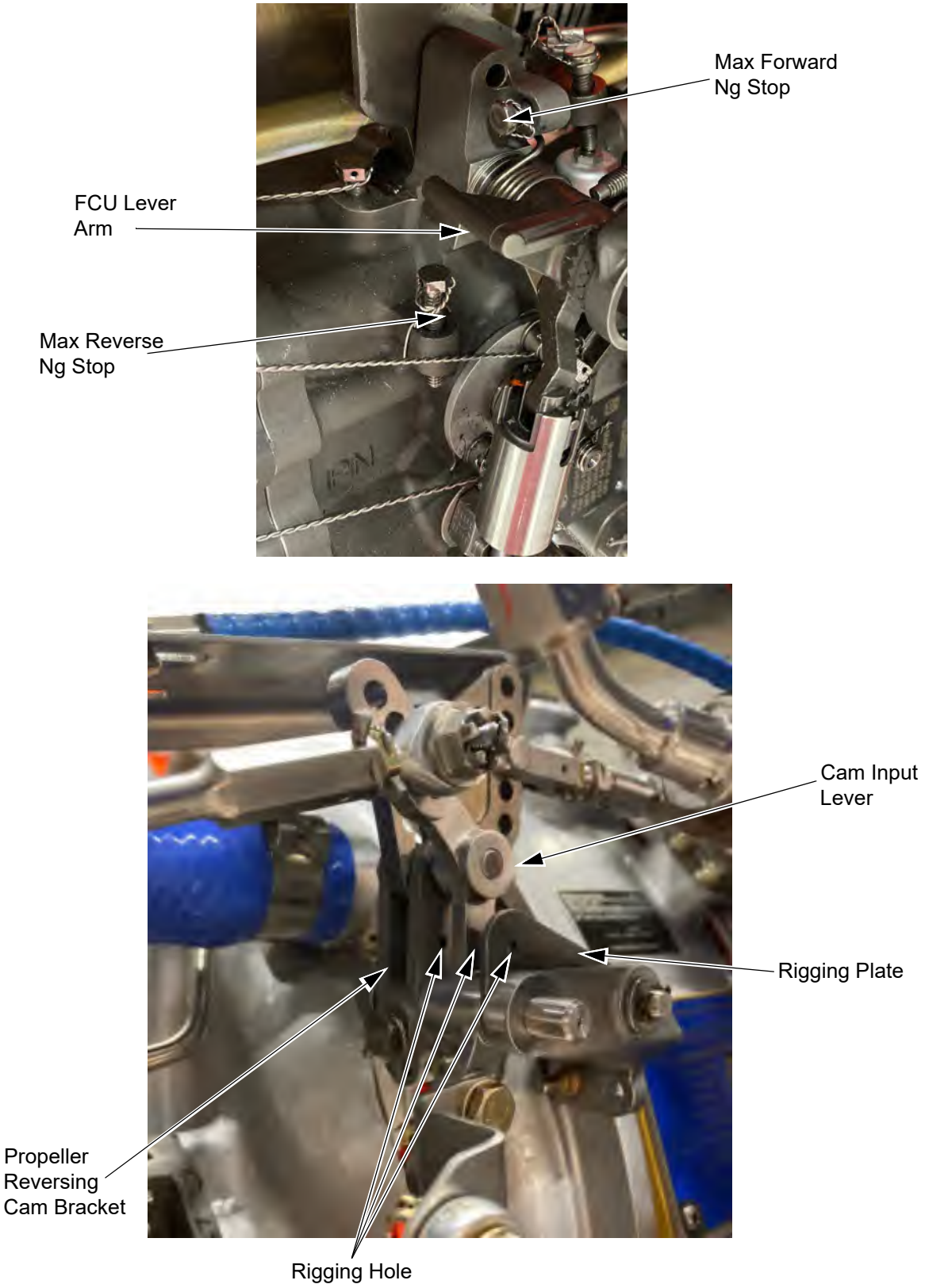

E. Beta Valve and Sliding Ng Reset Link Static Check

Note: The beta block must be in the beta ring prior to the static check of the beta valve.

(1) Put the cockpit power lever in the low idle position (against quadrant gate).

(2) Verify the bottom of the beta valve clevis slot is even with the end of the beveled front edge of the cap nut.

(3) Verify the Ng reset link gap on the PGU is set to .090 - .110.

Figure 71-0.5: Beta Valve and Sliding Ng Reset Link Static Check

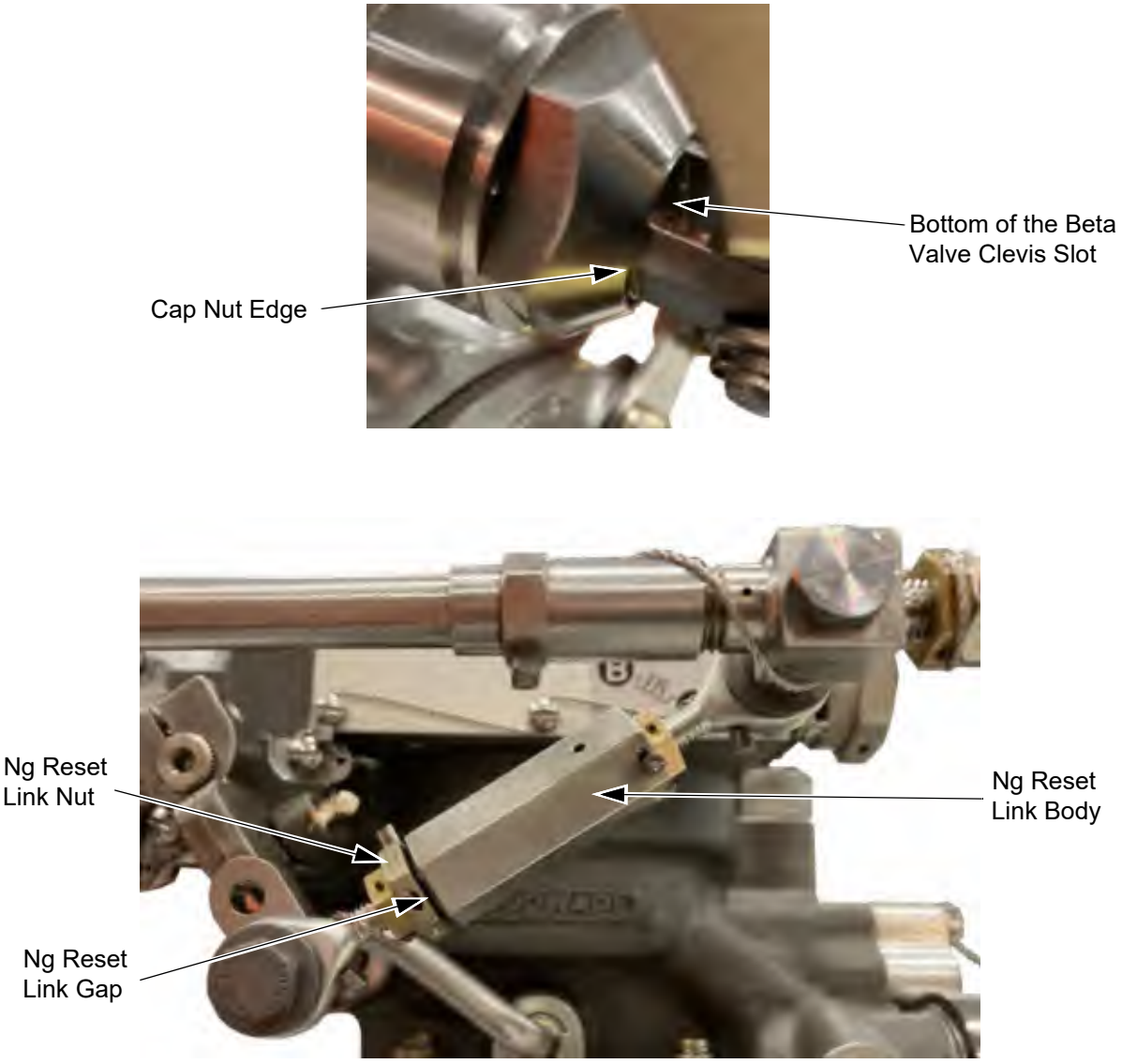

F. Pre-Operational Check

(1) Remove the cowling.

(2) Examine the engine mounts, air inlet system / inertial separator for security/attachment (fasteners, linkage, etc.).

(3) Examine all linkages to the engine and to accessories mounted on the engine, for attachment.

(4) Examine all fuel and oil tubes, lines, and connections for attachment and leaks. No leaks are permitted, except at normal seepage drains.

(5) Examine all pneumatic line connections and filters for attachment.

(6) Examine all electrical connectors for correct attachment. Check installation of the remote mounted ignition exciter.

WARNING: Set the BATT 1 and BATT 2 switches to OFF and disconnect external electrical power from the airplane (refer to Chapter 24-40).

(7) Check cockpit controls for freedom of movement and verify full travel of control linkages on engine.

CAUTION: Do not move the cockpit power control lever into the reverse (Beta) position or damage to the linkage will result. Reverse may only be selected with the engine running and the propeller turning or with the push-pull cable is disconnected from the propeller reversing cam.

(8) Check the engine oil level and service as necessary. Ensure the filler cap is locked after servicing.

(9) Install the cowling.

(10) Check that the fuel system has been serviced with correct fuel (refer to Service Bulletin SB14004, Turboprop Engine, Engine Fuel and Additives – Requirements and Approved Listing).

CAUTION: Operation of the engine must only be done by qualified personnel.

G. Pre-Start Checks

(1) Set the POWER lever to IDLE.

(2) Set the PROP lever to FEATHER.

(3) Set the COND lever to FUEL CUT-OFF.

(4) Ensure the BATT 1 and BATT 2 switches are ON.

(5) Set the fuel selector valve to RIGHT TANK or LEFT TANK

(6) Ensure the L FUEL PUMP and R FUEL PUMP switches are ON.

(7) Ensure the fuel inlet pressure is 5 psig minimum.
(8) Set the BLEED AIR switch to OFF.

H. Engine Starting

WARNING: Ensure that personnel, other aircraft, and equipment are clear of the engine and propeller.

(1) Do pre-start checks.
(2) Set the IGNITER switch to ON.
(3) Set the STARTER GEN switch to ON.
(4) Set the START switch to ON momentarily (push once)
(5) Check the engine oil pressure for indication.

Note: Minimum Ng to get satisfactory ignition is 12% (4495 RPM).

CAUTION: Whenever the gas generator fails to ignite within 10 seconds after moving the fuel condition lever to the ground idle position, shut off the fuel, starter, and ignition. Wait 30 seconds for fuel to drain, followed by 15 seconds of dry motoring run before trying another start. If starter limits permit, it is not necessary to allow rundown after the dry motoring run. if, for any reason, a start attempt is discontinued, let the engine come to a complete stop to permit gas generator drain valves operation, then do a dry motoring run. Repeat the complete start sequence. observe starter limits. Refer to the starter manufacturer's manual.

(6) As the gas generator speed passes through or has stabilized above the minimum light-off speed, move the COND lever to LOW IDLE.
(7) Check that Ng accelerates to low-idle and that ITT starting limit is not exceeded.
(8) When the engine attains low-idle set the IGNITER switch to OFF.
(9) Before proceeding to ground run, do at least two feathering cycles to purge the propeller governor and the propeller hub. Keep the POWER lever in IDLE.

I. High Idle Ng Limits Check

Note: Do the following check while the engine is running and under conditions representative of normal operation with an oil temperature at or above 113ºF (45ºC).

Note: Prior to the high idle Ng check, cycle the Power Control Lever from low idle to high idle and allow the low idle Ng to stabilize for two minutes.

(1) Set the POWER lever to IDLE.
(2) Set the PROP lever to MAX RPM.
(3) Set the COND lever to HIGH IDLE.
(4) High idle speed:
    (a) (SN: K003-K010) will be 68% to 71% Ng if rigged properly.
    (b) (SN: K011 and On) will be 70% to 72% Ng if rigged properly.

CAUTION: MAKE SURE THE HIGH IDLE NG DOES NOT BRING THE PROPELLER RPM INTO THE PROPELLER TRANSIENT RANGE:

4-BLADED PROPELLER (SN: K003-K010) TRANSIENT RANGE: 350 – 950 RPM

5-BLADED PROPELLER (SN: K011 and On) TRANSIENT RANGE: 400 – 900 RPM

J. Propeller RPM Maximum Check

(1) With the engine running put the power quadrant levers in the following positions:
    (a) Set the POWER lever to FORWARD OF LOW
    (b) Set the PROP lever to MAX RPM.
    (c) Set the COND lever to HIGH IDLE.
(2) Propeller maximum RPM will be 1700 +25/-15 if properly rigged.

K. Propeller RPM maximum Reverse Check

(1) With the engine running put the power quadrant levers in the following positions:
    (a) Set the POWER lever to reverse (Beta).
    (b) Set the PROP lever to MAX RPM.
    (c) Set the COND lever to HIGH IDLE.
(2) Propeller RPM maximum reverse should be between 1328 and 1650 RPM if properly rigged.

L. Manual Override System Operation Check

CAUTION: Other than the following check, use of the manual override system is restricted to emergencies only.

CAUTION: When using the manual override system the engine response may be more rapid than when using the POWER lever. A rapid increase in the manual override lever position towards maximum is to be avoided as this can cause engine surge, engine over-temperature, Ng overspeed, or over-torque.

(1) Do the manual override system static check as follows:

(a) Set the MAN OVRD lever to OFF.

(b) Start the engine.

(c) Make sure the power lever is against the aft idle gate.

(d) Slowly advance the MAN OVRD lever, observing ITT, torque, and Ng at all times. Keep Ng maximum increase to under 4% per second.

Note: Some movement of the MAN OVRD lever resulting in no increase in engine power is normal.

(e) Slowly increase Ng until a 15% increase above low idle speed is obtained. This indicates proper functioning of the manual override system.

(f) Slowly move the MAN OVRD lever to OFF, keeping Ng decrease to less than 4% Ng per second.

M. Low “Ground” Idle Ng Limits Check

Note: Do the following check while the engine is running and under conditions representative of normal operation.

(1) Set the POWER lever to IDLE.

(2) Set the PROP lever to FEATHER.

(3) Set the COND lever to LOW IDLE.

(4) Low idle speed (SN: K003 and On) will be 52% to 57% Ng if properly rigged.

CAUTION: MAKE SURE THE HIGH IDLE NG DOES NOT BRING THE PROPELLER RPM INTO THE PROPELLER TRANSIENT RANGE:

4-BLADED PROPELLER (SN: K003-K010) TRANSIENT RANGE: 350 – 950 RPM

5-BLADED PROPELLER (SN: K011 and On) TRANSIENT RANGE: 400 – 900 RPM

N. Feathering Operation Check

Note: Do the following check while the engine is running and under conditions representative of normal operation.

(1) Set the POWER lever to IDLE.
(2) Set the PROP lever to FEATHER.
(3) Verify no surging occurs with respect to Ng or Np.

O. Oil Pressure Check

(1) Start the engine.
(2) Run the engine at a speed above 72% Ng to stabilize the oil temperature within the operating range.
(3) After instrument readings have stabilized, make sure oil pressure is within the following limits.

Table 71-0.1: Oil Pressure Limits

Engine Setting	Starting	Low Idle	Norm Cruise/ Climb	Max Cruise/ Climb	Max Cont.	Takeoff	Max Reverse	Transient*
PSI	200 Max	60 Min	90-135	90-135	90-135	90-135	90-135	40-200

* Limited to 20 seconds

Note: Normal oil pressure is 90 to 135 psig at Ng above 72%. With engine torque below 3000 lb. ft., minimum oil pressure is 85 psig at normal oil temperature 60° to 70°C (140° to 160°F). Oil pressures under 90 psig are undesirable. Under emergency conditions, to complete a flight, a lower oil pressure limit of 60 psig is permissible at reduced power level not exceeding 2000 lb. ft. torque. Oil pressures below 60 psig are unsafe and require engine be shut down, or landing be made as soon as possible using minimum power required to sustain flight.

(4) To adjust the oil pressure, refer to the latest revision of the Pratt &Whitney Maintenance Manual for Turboprop Gas Turbine Engine, Manual No. 3036132.

(5) Shut down the engine.

P. Engine Performance Check

(1) Double chock the main tires.

(2) Apply full brakes.

(3) Refer to the latest revision of the Pratt &Whitney Maintenance Manual for Turboprop Gas Turbine Engine, Manual No. 3036132 for additional information and procedures.

(4) Run the engine at the torque value shown in the "Ground Performance Chart – Torque" per the ambient temperature and Pressure Altitude (field barometric pressure (PA) in feet), (Figure 71-0.1).

Figure 71-0.1: Ground Performance Chart - Torque

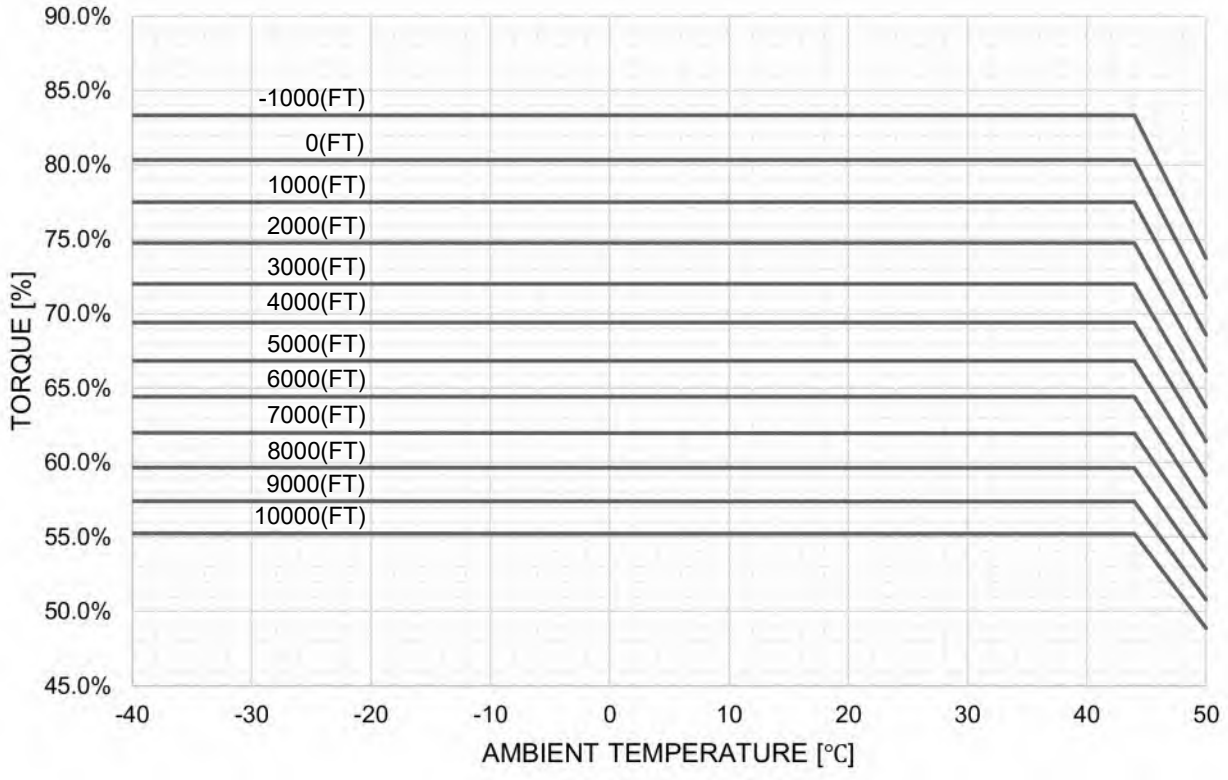

Conditions:

- •Engine Static
- •Engine Installed
- •NP=1700 rpm (100%)

Note: This graph is not to be used to accept or reject an

Figure 71-0.2: Ground Performance Chart - Fuel Flow

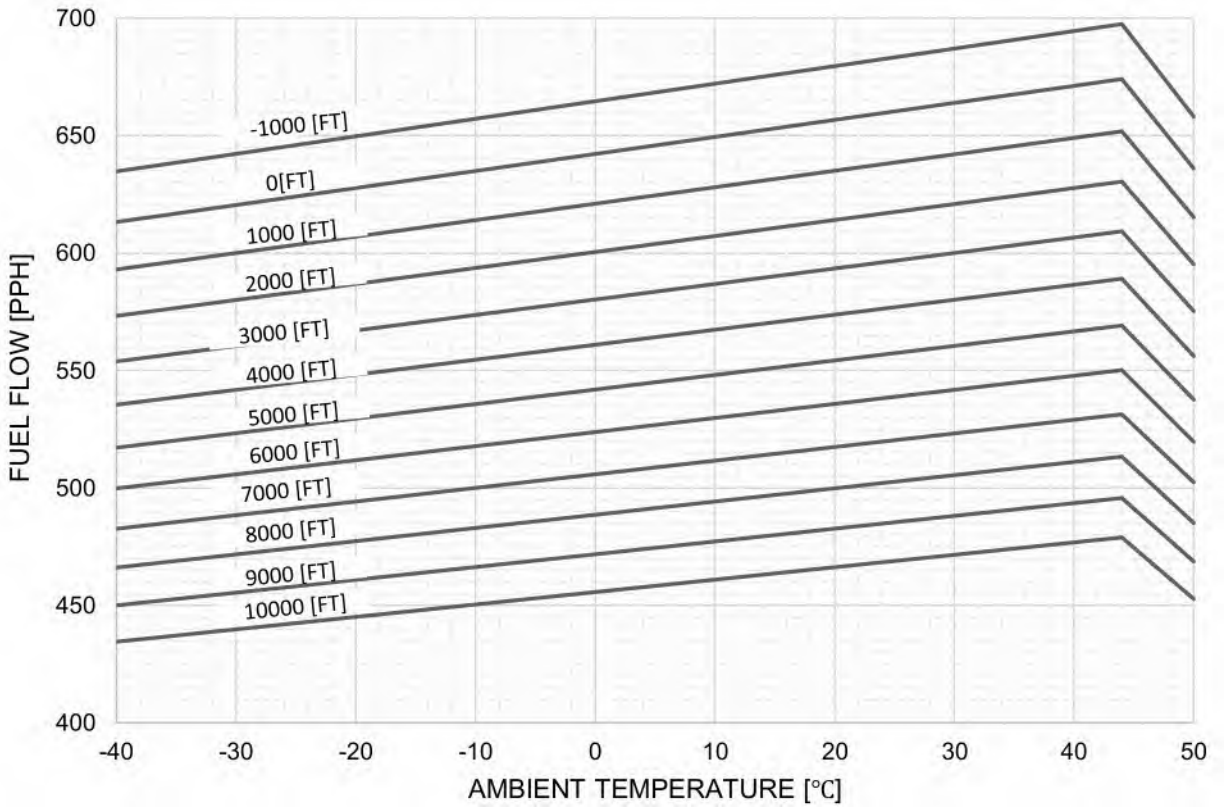

Conditions:

- •Engine Static
- •Engine Installed
- •NP=1700 rpm (100%)

Note: This graph is not to be used to accept or reject an engine.

Figure 71-0.3: Ground Performance Chart - NG

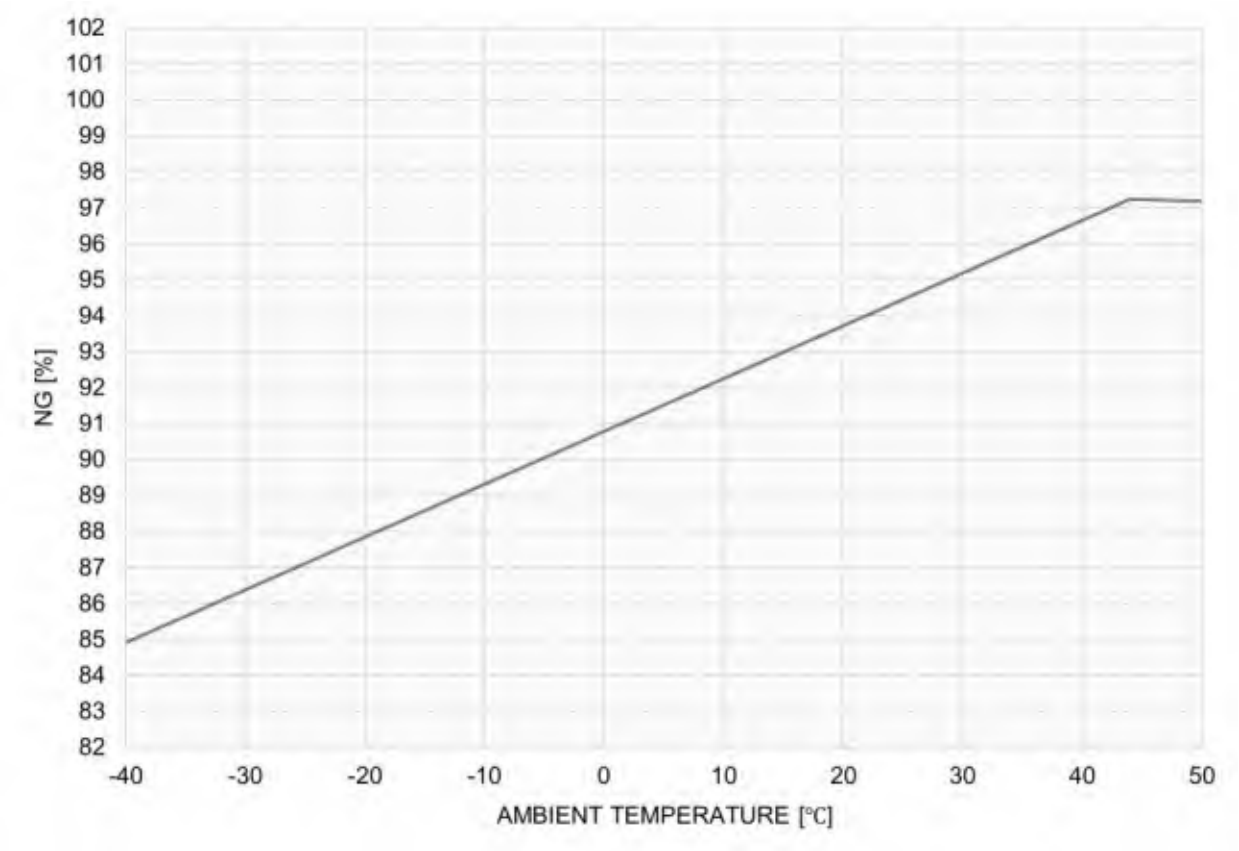

Conditions:

- •Engine Static
- •Engine Installed
- •NP=1700 rpm (100%)

Note: This graph is not to be used to accept or reject an engine.

Figure 71-0.4: Ground Performance Chart - ITT

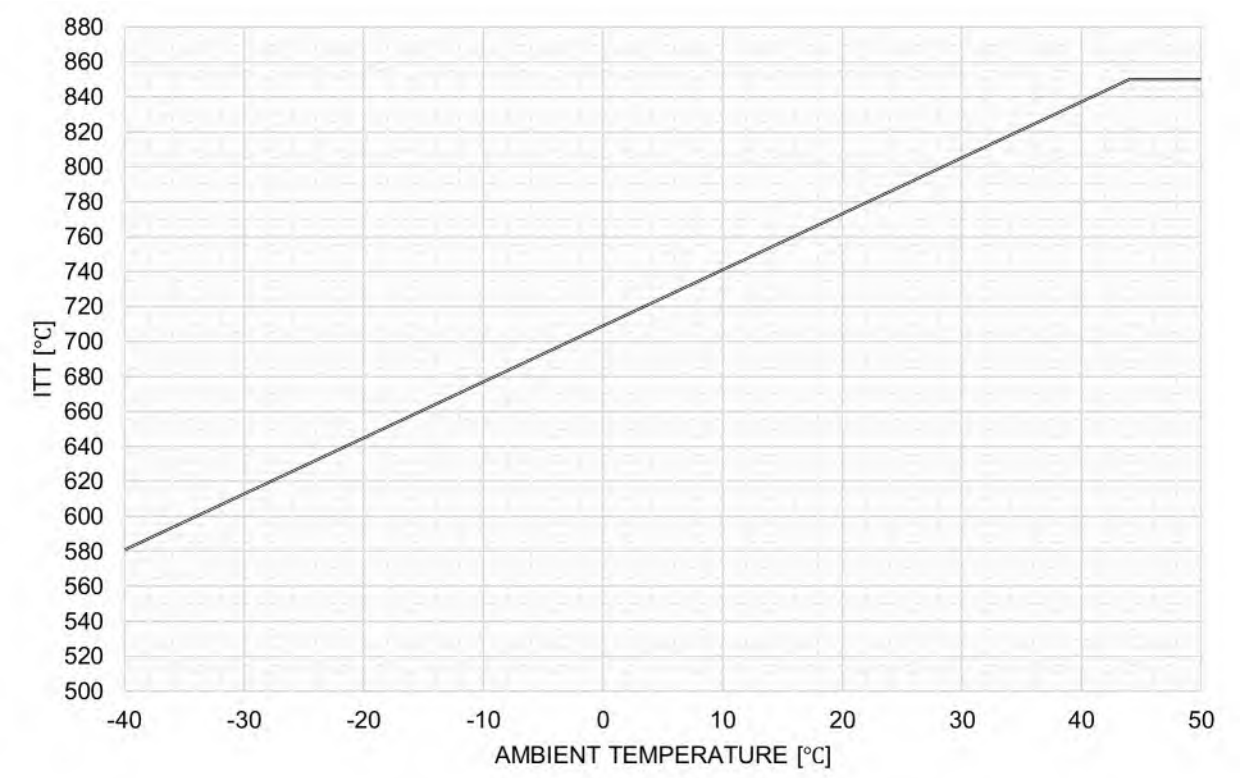

Conditions:

- •Engine Static
- •Engine Installed
- •NP=1700 rpm (100%)

Note: This graph is not to be used to accept or reject an engine.

Table 71-0.2: Ground Performance Chart Data

Altitude (ft)	TAMB (ºC)	TQ (lb-ft)	TQ (%)	WF (PPH)	NG (rpm)	ITT (ºC)
-1000	-40	3089	83.3%	635	33112	581
	44	3089	83.3%	698	37922	850
	50	2734	73.8%	658	37922	850
0	-40	2978	80.3%	613	Same at all pressure altitudes	Same at all pressure altitudes
	44	2978	80.3%	674		
	50	2635	71.1%	636		
1000	-40	2873	77.5%	593	Same at all pressure altitudes	Same at all pressure altitudes
	44	2873	77.5%	652		
	50	2542	68.6%	615		
2000	-40	2771	74.8%	573	Same at all pressure altitudes	Same at all pressure altitudes
	44	2771	74.8%	630		
	50	2453	66.2%	595		
3000	-40	2669	72.0%	554	Same at all pressure altitudes	Same at all pressure altitudes
	44	2669	72.0%	609		
	50	2363	63.8%	575		
4000	-40	2573	69.4%	535	Same at all pressure altitudes	Same at all pressure altitudes
	44	2573	69.4%	589		
	50	2277	61.4%	556		
5000	-40	2478	66.8%	517	Same at all pressure altitudes	Same at all pressure altitudes
	44	2478	66.8%	569		
	50	2193	59.2%	538		
6000	-40	2388	64.4%	500	Same at all pressure altitudes	Same at all pressure altitudes
	44	2388	64.4%	550		
	50	2113	57.0%	520		
7000	-40	2298	62.0%	483	Same at all pressure altitudes	Same at all pressure altitudes
	44	2297	62.0%	531		
	50	2036	54.9%	502		

Table 71-0.2: Ground Performance Chart Data

80000	-40	2212	59.7%	466	Same at all pressure altitudes	Same at all pressure altitudes
	44	2211	59.6%	513		
	50	1957	52.8%	485		
90000	-40	2129	57.4%	450	Same at all pressure altitudes	Same at all pressure altitudes
	44	2127	57.4%	496		
	50	1883	50.8%	469		
10000	-40	2048	55.3%	435	Same at all pressure altitudes	Same at all pressure altitudes
	44	2047	55.2%	479		
	50	1812	48.9%	453		

Q. Hot Section Inspection (HSI)

Refer to the latest revision of the Pratt &Whitney Maintenance Manual for Turboprop Gas Turbine Engine, Manual No. 3036132 for additional information and procedures.

R. Dry Motoring Run

WARNING: Ensure personnel, other aircraft, and equipment are clear of the engine and propeller.

Note: This procedure is used any time it is necessary to remove internally trapped fuel and vapor or if there is evidence of a fire within the engine gas path. Air passing through the engine will purge fuel, vapor, or fire from the combustion section, compressor turbine, power turbines, and exhaust system.

(1) Set the PROP lever to FEATHER.
(2) Set the COND lever to FUEL CUT-OFF.
(3) Set the POWER lever to IDLE.
(4) Ensure the BATT 1 and BATT 2 switches are ON.
(5) Set the fuel selector valve to RIGHT TANK or LEFT TANK
(6) Ensure the L FUEL PUMP and R FUEL PUMP switches are ON (to give lubrication for the engine driven fuel pumping elements).
(7) Pull the IGNITER circuit breaker.
(8) Set the STARTER GEN switch to ON.
(9) Set the START switch to ON momentarily (push once).

WARNING: Should a fire persist, as shown by sustained ITT, close the fuel system shutoff valve and continue motoring.

(10) Maintain starter operation for the desired duration. Observe starter limits (refer to the starter manufacturer's manual).

(11) Set the STARTER GEN switch to OFF.

(12) Set the L FUEL PUMP and R FUEL PUMP switches to OFF.

Note: Wait the required cooling period for the starter before any further operation is attempted.

(13) Check all oil and fuel lines and connections for leaks. No leaks are permitted except at normal seepage drains.

(14) Check the engine oil level and service as necessary.

S. Engine Shutdown

WARNING: If there is fire within the engine after shutdown immediately do a dry motoring run.

(1) Set the POWER lever to IDLE.

Note: Let the engine stabilize for a minimum of two minutes at minimum obtainable ITT.

(2) Set the PROP lever to FEATHER.

(3) Set the COND lever to FUEL CUT-OFF.

(4) Set the L FUEL PUMP and R FUEL PUMP switches to OFF.

(5) Set the fuel selector valve to RIGHT TANK or LEFT TANK.

(6) Check that the compressor decelerates freely and note the rundown time.

T. Post-Shutdown Checks

(1) Check all engine oil lines and connections for leaks. No leaks are permitted, except at normal seepage drains.

Note: Adjustments must be done under conditions representative of normal operation.

Note: Permitted oil seepage is 3 cc/hour at each accessory drive pad, and 5 cc/hour at the propeller shaft. All seal leakages must be included in total oil consumption.

(2) Check all engine fuel lines and connections for leaks. No leaks are permitted except at normal seepage drains.

(3) Check the engine oil level and service as necessary.

WARNING: Shut down the engine before doing any adjustments on engine associated equipment. This is essential due to the close proximity of the propeller and exhaust nozzles.

(4) Check all engine mounted and off-mounted accessories and linkages for correct mounting.

Table 71-0.3: Engine Operating Limits

Operating Conditions (2)	SHP	Torque (1)		Maximum Observed ITT °C	Ng (9)		Np		Oil Press. Psig (3)	Oil Temp °C (7) (8)
		lb-ft	psig		RPM	%	RPM	%		
Takeoff	1200	3708	47.34	850	39000	104	1700	100	90 to 135	10 to 110
Max. Cont.	1200	3708	44.34	840	39000	104	1700	100	90 to 135	10 to 110
Max. Cruise/ Max. Climb	1000	3625	44.84	840	39000	104	1700	100	90 to 135	10 to 105
Norm. Climb/ Norm. Cruise	1000	3625	43.35	820	39000	104	1700	100	90 to 135	10 to 105
Min. Idle	-	-	-	750 (6)	19000	51	-	-	60 Min.	-40 to 110
Starting	-	-	-	1000 (4)	-	-	-	-	200 Max.	-40 Min.
Transient	-	5100 (5)	60.98	870 (5)	39000	104	1870	110 (5)	40 to 200 (5)	0 to 110
Max. Reverse	900	-	-	760	-	-	1650	97	90 to 135	10 to 105

Note 1: Torque limit applies within range of 1000 to 1700 rpm propeller shaft; below 1000 rpm torque is limited to 2000 lb. ft.

Note 2: Engine inlet condition limits for engine operation are sea level to 41,000 ft.

Note 3: Normal oil pressure is 90 to 135 psig at Ng above 72%. With engine torque below 3000 lb. ft., minimum oil pressure is 85 psig at normal oil temperature 60° to 70°C (140° to 160°F). Oil pressures under 90 psig are undesirable. Under emergency conditions, to complete a flight, a lower oil pressure limit of 60 psig is permissible at reduced power level not exceeding 2000 lb. ft. torque. Oil pressures below 60 psig are unsafe and require engine be shut down, or landing be made as soon as possible using minimum power required to sustain flight.

Note 4: Limited to 5 seconds.

Note 5: Limited to 20 seconds.

Note 6: Applies over speed range Ng 21000 to 23000 rpm.

Note 7: For increased service life of engine oil, an oil temperature below 80°C (176°F) is recommended.

Note 8: Oil temperature limits are -40° to 105°C (-40° to 221°F) with limited periods of 10 minutes at 105° to 110°C (221° to 230°F).

Note 9: 100% Ng is 37,500 rpm.

COWLING

1. Description

The cowling is four parts made of carbon fiber composite material. The cowling are attached to the fuselage and each other using quick release fasteners. The engine oil door is in the upper cowling. The engine air inlet which has two halves is part of the lower cowling. The lower cowling includes the nose gear doors, engine drains, engine inlets, and the oil cooler inlet.

Most maintenance done forward of the firewall only requires the upper, left, and right side cowling be removed.

2. Maintenance Practices

A. Cowling

(1) Removal

(a) Loosen the cowling fasteners that attach the upper cowling to the fuselage and the side cowlings.

(b) With a person on each side, gently lift and remove the upper cowling.

(c) Loosen the fasteners that attach the left cowling to the lower cowling and the fuselage. Disconnect the left wing ice light electrical harness then remove the cowling.

(d) Loosen the fasteners that attach the right cowling to the lower cowling and the fuselage and remove the right cowling.

(e) Disconnect the left and right nose gear door actuation arms from the nose gear doors.

(f) In the nose wheel well, loosen the clamp that attaches the flexible hose connecting the engine drain manifold to the overboard drain.

(g) Loosen the cowling fasteners that attach the lower cowling to the fuselage.

Note: Make reference marks on the mounting brackets to help with re-installation.

(h) Disconnect the engine inlet de-ice boot pneumatic line at the lower cowl connection (SN: K056 and On, and K003-K055 with SB-0035), refer to figure 71-10.1 sheet 2.

(i) While supporting the lower cowl, remove the bolts, washers, and locknuts that attach the lower cowling to the engine mount.

(j) With a person on each side, carefully tilt the cowling down and pull forward to free the oil cooler inlet air flange from the front of the cowling and the left and right air inlet ducts from the inertial separator buckets.

Note: Carefully rock the cowl side to side to help break the seal if needed.

(k) Remove the lower cowling.

(2) Installation

(a) With two people holding the lower cowling, align the cowling with the oil cooler inlet air flange, and the left and right air inlet ducts with the inertial separator buckets, then push aft and up.

Note: The air inlet ducts must extend inside of the inertial separator buckets 1/2" ± 1/4" with a 1/4" ± 1/8" gap all around.

(b) Attach the lower cowling to the fuselage using the quick release fasteners.

CAUTION: Upward pressure is required when tightening the hardware to the engine mount to prevent cowling sag and also to provide the proper clearance between the top cowling and propeller governor. If the clearance is not achieved, the top cowling will interfere with the operation of the propeller governor.

(c) Install the bolts, washers, and locknuts that attach the lower cowl mounting brackets to the engine mount mounting brackets.

Note: Adjust the cowling up or down using the slotted brackets on the engine mount. The forward end of the cowling must be parallel to the aft end of the spinner.

Note: The propeller at full feather must be 1/2" minimum from the edge of the intake lip when the propeller is at full feather and through full rotation with the lower cowling is installed.

(d) Put the right cowling in position and attach it to the lower cowling and the fuselage with the quick release fasteners.

(e) Put the left cowling in position and connect the electrical harness to the ice light then attach the left cowling to the lower cowling and the fuselage with the quick release fasteners.

CAUTION: Make sure the top cowl does not interfere with the operation of the propeller governor.

(f) With two people, put the upper cowling in position, then attach it to the left and right side cowling and fuselage with the quick release fasteners.

(g) In the nose wheel well, attach the flexible hose that connects the engine drain manifold to the overboard drain then tighten the clamp.

(h) Connect the engine inlet de-ice boot pneumatic line at the lower cowl connection, refer to figure 71-10.1 sheet 2 (SN:K056 and On, and K003-K055 with SB-0035).

(i) Connect the nose gear door actuation arms to the nose gear doors.

(3) Inspection

(a) Remove the cowling.

(b) Inspect the fastening hardware for presence, wear, security, and condition.

(c) Inspect for cracking and delamination.

(d) Inspect the exterior paint for condition.

(e) Inspect the interior epoxy coating for condition and chafing. Repair any chafing using Flame Control Coatings Inc. #46081 two-part epoxy in accordance with the manufacturer's instructions.

(f) Inspect the presence and condition of the oil filler door placard.

(g) Install the cowling.

B. Engine Inlet Lip

(1) Removal

(a) Removal the lower engine cowl (refer to A.1 this chapter).

(b) Loosen the band clamp that attaches the bleed air line to the de-ice boot fitting. Remove the bleed air line from the de-ice boot fitting.

(c) Remove the (8) screws and washers that attach the inlet lip to the lower cowling.

(d) Carefully pull the inlet lip away from the lower cowling.

(2) Installation

(a) Carefully put the inlet lip in position on the lower cowl.

Note: Make sure the spring clips correctly engage the lower cowl.

(b) Install the (8) screws and washers that attach the inlet lip to the lower cowl. Torque the screws to 20 - 25 in-lbs.

(c) Put the bleed air line in position on the de-ice boot fitting. Tighten the band clamp to 30 - 45 in-lbs.

(d) Install the lower cowl (refer to A.2 this chapter).

(3) Inspection

(a) Refer to chapter 30-10 for inspection requirements.

Figure 71-10.1: Cowling Installation (Sheet 1 of 4)

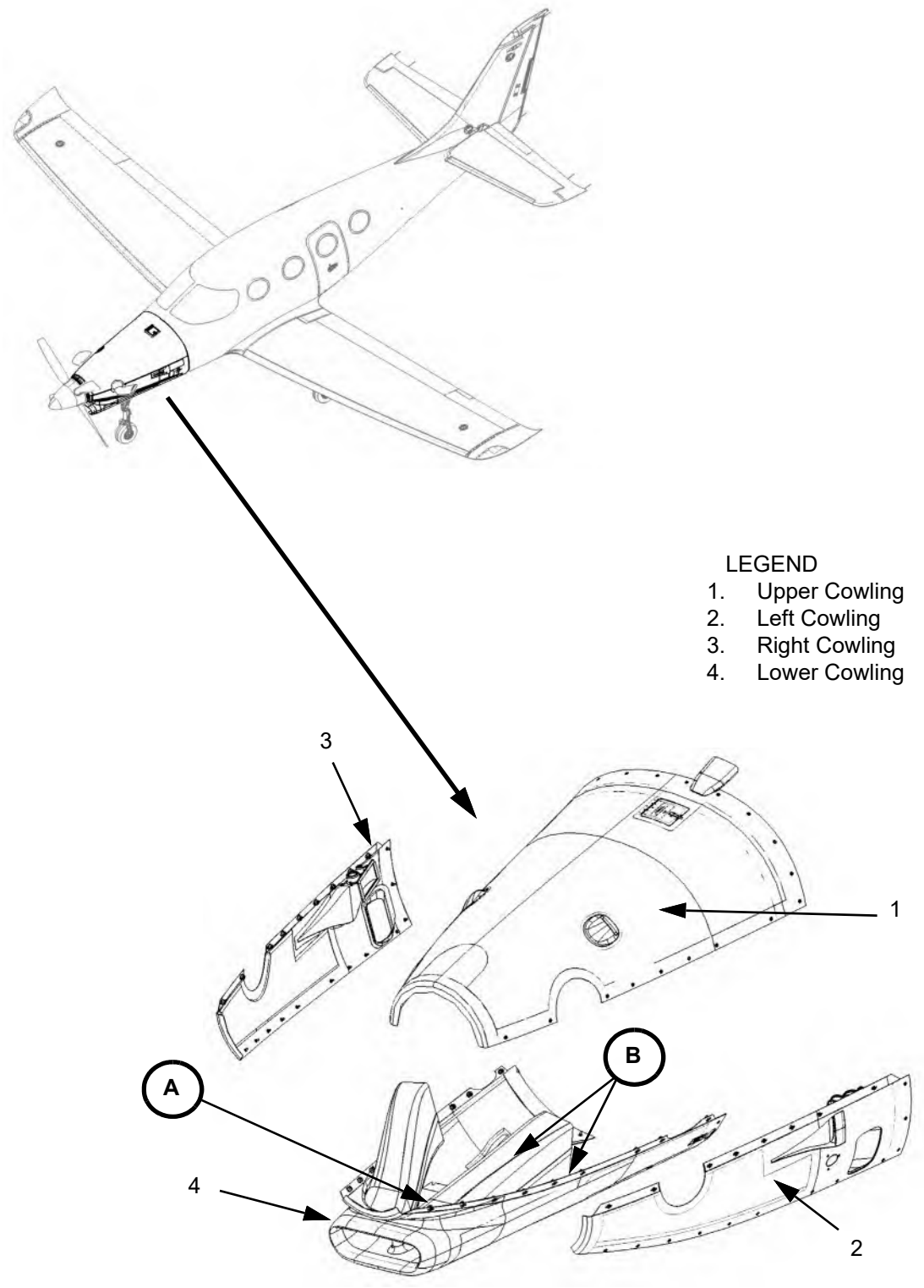

Figure 71-10.1: Cowling Installation (Sheet 2 of 4)

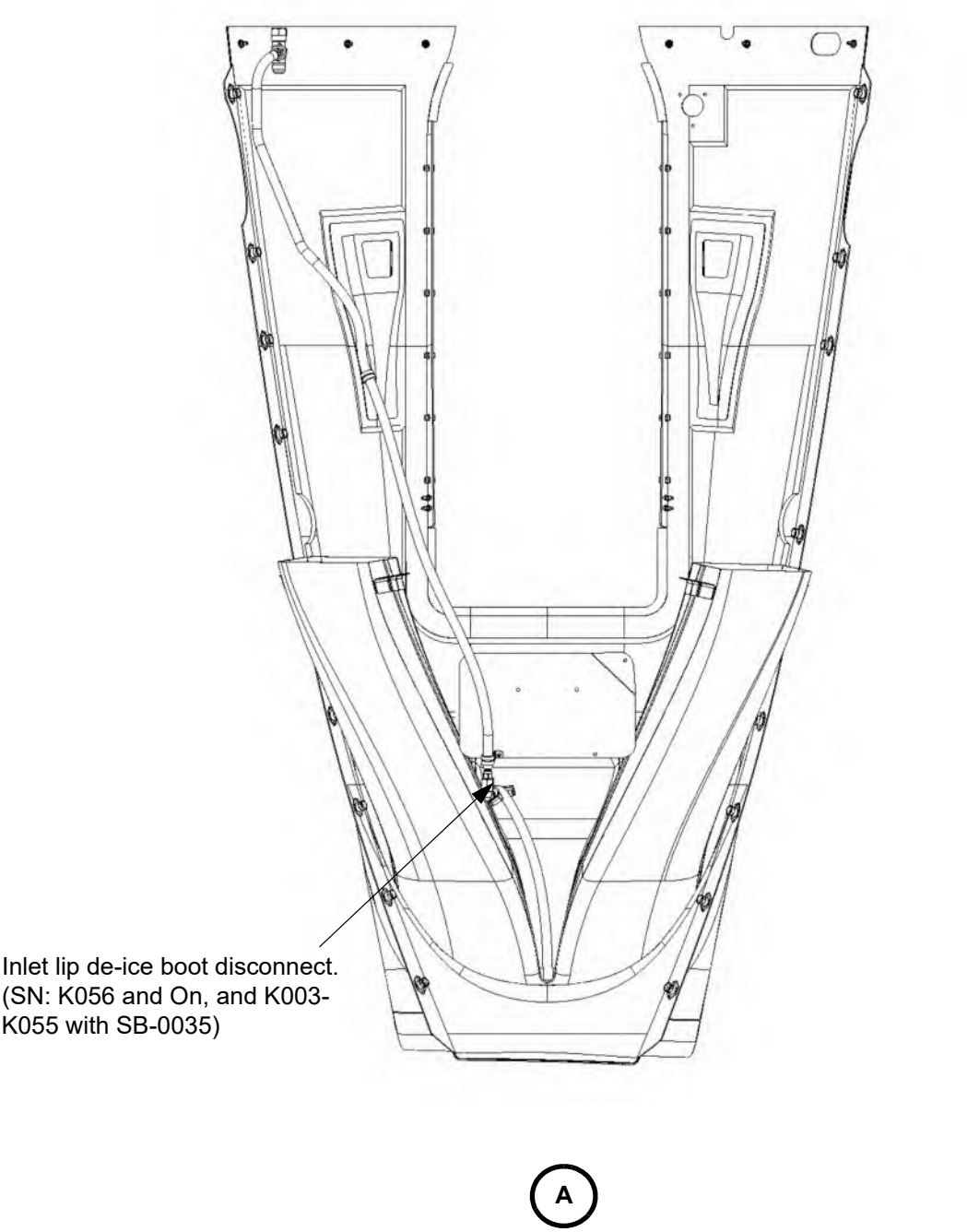

Figure 71-10.1: Cowling Installation (Sheet 3 of 4)

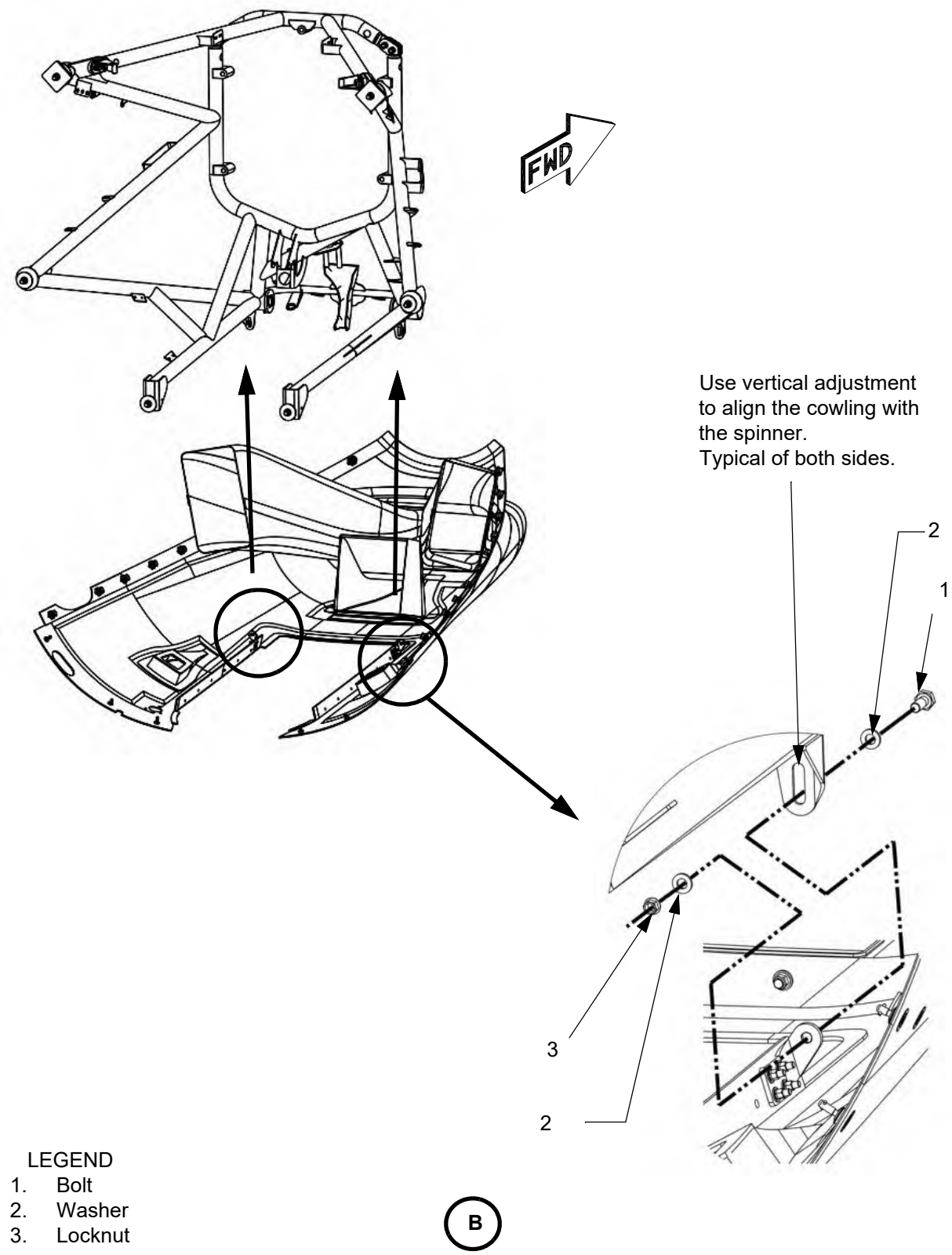

LEGEND
1. Bolt
2. Washer
3. Locknut

Figure 71-10.1: Cowling Installation (Sheet 4 of 4)

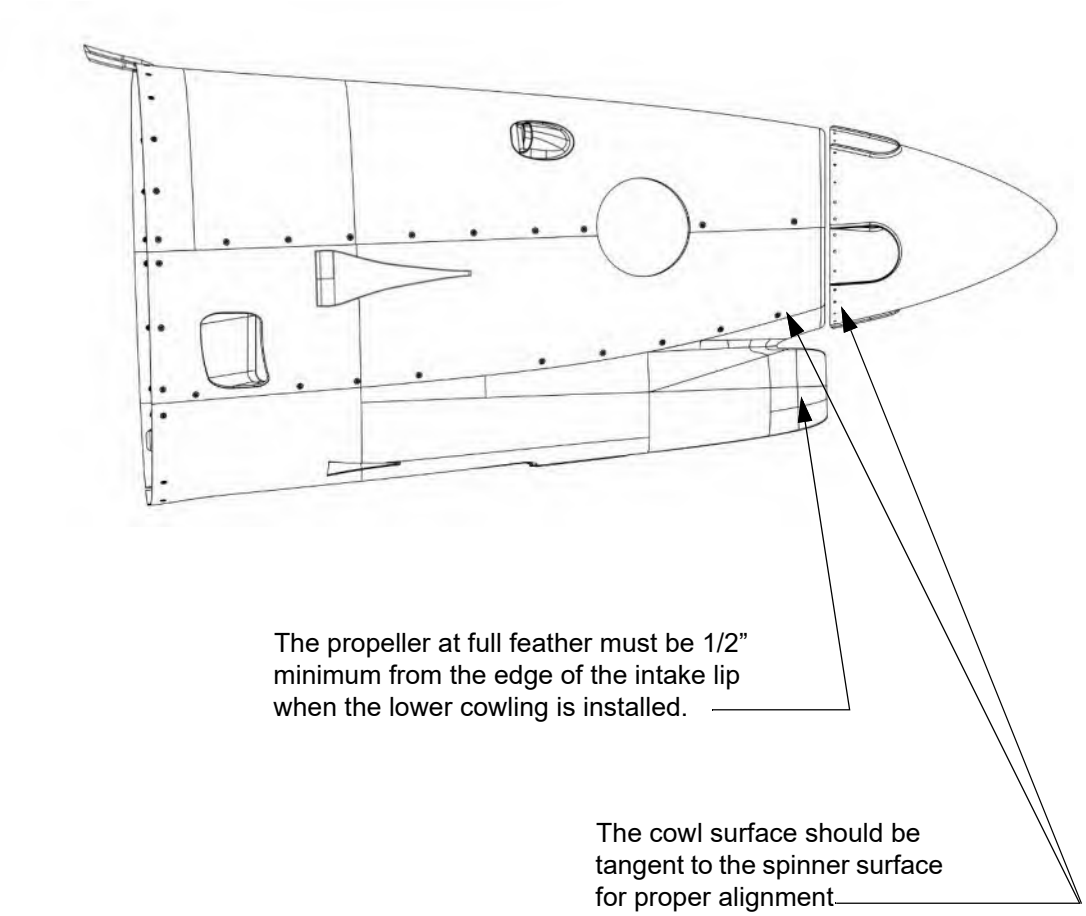

Figure 71-10.2: Engine Inlet Lip

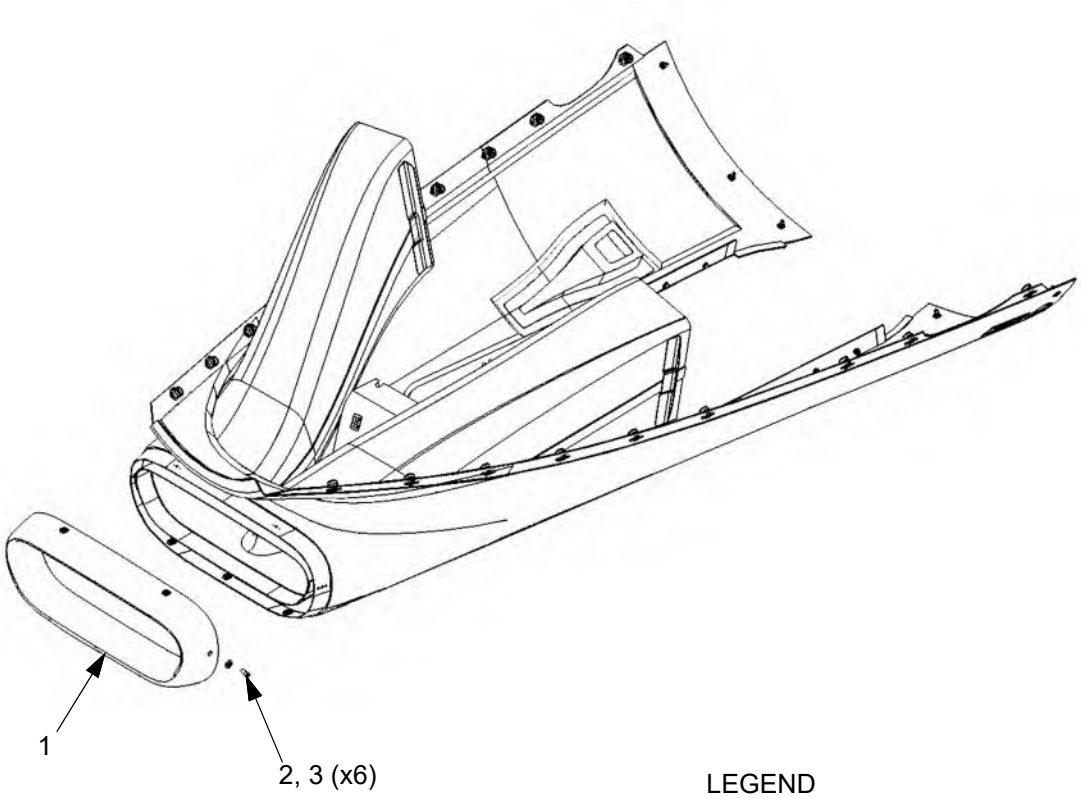

LEGEND
1. Engine Inlet Lip
2. Screw
3. Washer

MOUNTS

1. Description

The engine mount on this airplane is an assembly of an upper and lower framework. The upper half of the engine mount is removable for easier installation and removal of the engine.

The engine is attached to the engine mount at five locations, each of which has isolator assemblies.

2. Maintenance Practices

A. Engine Vibration Isolators

(1) Removal

(a) Remove the cowling (refer to Chapter 71-10).

(b) Attach a suitable engine sling to the forward and aft engine hoist lugs.

(c) Connect an engine hoist to the eye of the engine sling.

(d) With the weight of the engine supported by the hoist remove the nut, washers, and bolt attaching the engine isolator to the engine mount.

(e) Remove the four bolts attaching the engine isolator bracket to the engine then remove the isolator bracket and gasket from the pad on the engine.

(2) Installation

(a) Install the isolator bracket and gasket onto the mounting pad on the engine using four bolts. Torque the bolts 225 to 300 in-lbs then install safety wire.

(b) Assemble the components of the engine isolator onto the isolator bracket then attach the assembly to the engine mount using a bolt, washers, and a locknut. Torque the nut 450 to 600 in-lbs.

(c) Remove the engine sling.

(d) Install the cowling (refer to Chapter 71-10).

Figure 71-20.1: Engine Vibration Isolators

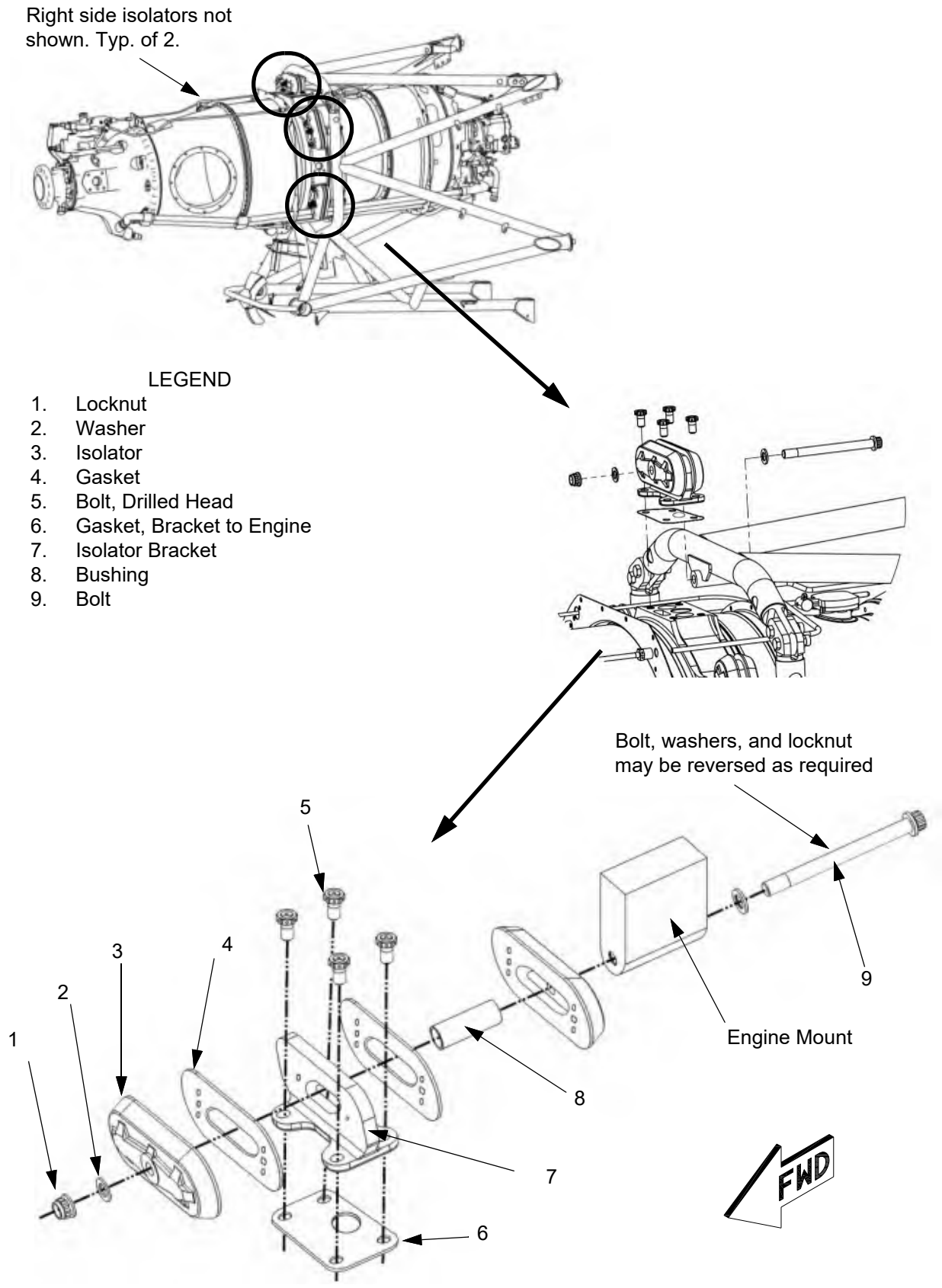

B. Upper Engine Mount

(1) Removal

(a) Remove the cowling (refer to Chapter 71-10).

(b) Attach a suitable engine sling to the forward and aft engine hoist lugs.

(c) Connect an engine hoist to the eye of the engine sling.

(d) Support the weight of the engine using the hoist.

(e) Remove the engine isolator attached to the upper engine mount.

(f) Remove the eight bolts, washers, and nuts attaching the upper half of the engine mount to the lower half.

(g) Remove the upper engine mount.

(2) Installation

(a) Attach the upper engine mount to the lower engine mount using bolts, washers, and locknuts.

(b) Assemble the components of the engine isolator onto the isolator bracket then attach the assembly to the engine mount using a bolt, washers, and a locknut. Torque the nut 38 to 50 ft-lbs.

(c) Remove the engine sling.

(d) Install the cowling (refer to Chapter 71-10).

(3) Damage Repair

(a) Report all damage to Epic Aircraft engineering for repair instructions.

(b) Once damage is repaired per Epic Aircraft engineering instructions, restore corrosion protection with Axalta 13580S, Axalta 1220S or MIL-PRF-23377 Type I (C1, C2, or N) primer and Axalta AF3500 or MIL-PRF-85285 Type I top coat. Top coat should best match existing RAL 9006 powdercoat.

C. Lower Engine Mount

(1) Removal

(a) Remove the cowling (refer to Chapter 71-10).

(b) Remove the engine (refer to Chapter 71-00).

(c) Remove the firewall blanket plate on the RH engine mount leg (refer to Chapter 71-3).

(d) Disconnect the nose gear support strut from the lower engine mount.

(e) Remove the lower engine mount from the firewall.

(2) Installation

(a) Attach the lower engine mount to the firewall using bolts, washers, and locknuts. Wet install the fasteners using PPG Aerospace fire sealant paste (PR-1995) to cover unpainted surfaces of the stud and flange portions of the engine mount. Verify squeeze out of the sealant around the forward face of the joint. Torque the bolts 46 ± 5 ft-lbs.

(b) Install the firewall blanket plate onto the RH engine mount leg (refer to Chapter 71-30).

(c) Connect the nose gear support strut to the lower engine mount.

(d) Install the engine (refer to Chapter 71-00).

(e) Install the upper engine mount.

(f) Install the cowling (refer to Chapter 71-10).

(3) Damage Repair

(a) Report all damage to Epic Aircraft engineering for repair instructions.

(b) Once damage is repaired per Epic Aircraft engineering instructions, restore corrosion protection with Axalta 13580S, Axalta 1220S or MIL-PRF-23377 Type I (C1, C2, or N) primer and Axalta AF3500 or MIL-PRF-85285 Type I top coat. Top coat should best match existing RAL 9006 powdercoat.

Figure 71-20.2: Engine Mount (Sheet 1 of 2)

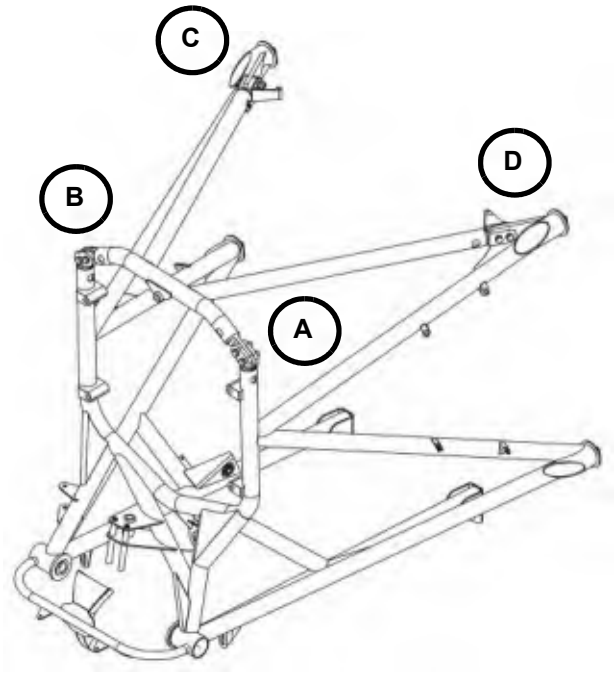

LEGEND

1. Bolt
2. Washer
3. Locknut
4. Castellated Nut
5. Cotter Pin
6. Reinforcement Plate
7. Support Strut

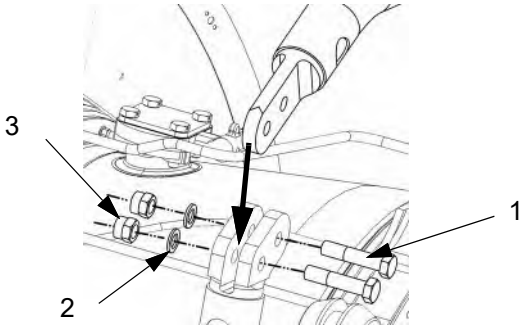

B

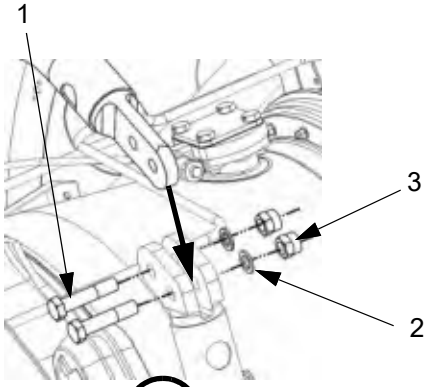

A

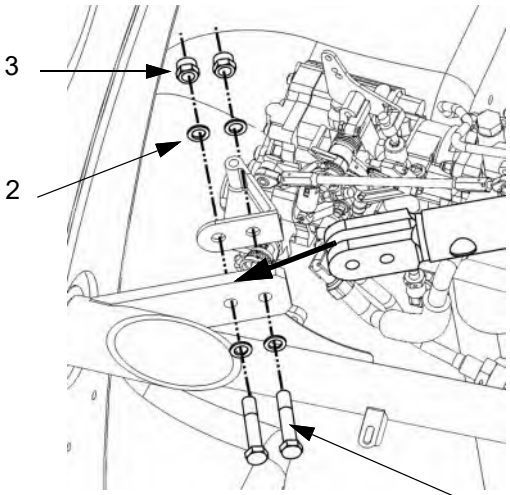

D

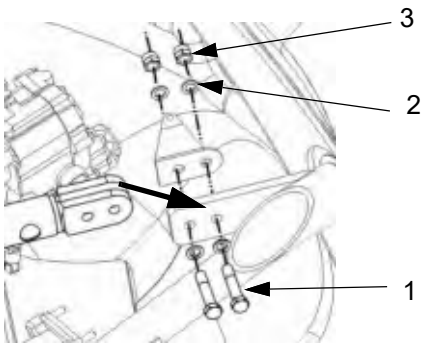

C

Figure 71-20.2: Engine Mount (Sheet 2 of 2)

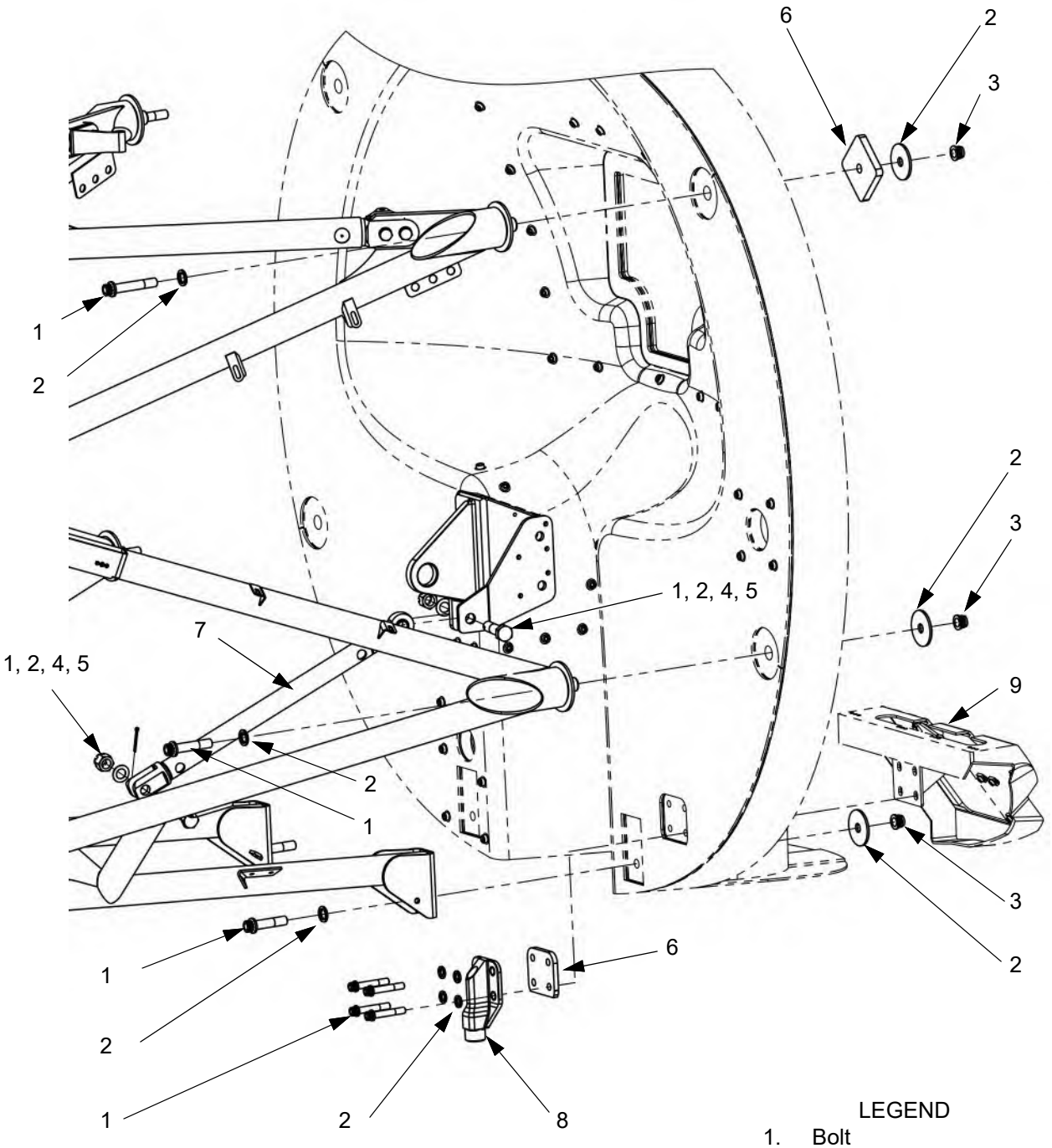

The left side of the engine mount is shown. The right side is similar.

LEGEND

1. Bolt
2. Washer
3. Locknut
4. Castellated Nut
5. Cotter Pin
6. Reinforcement Plate
7. Support Strut
8. Jack Point
9. Firewall Gusset

FIRESEALS AND SHROUDS

1. Description

This chapter gives removal and installation procedures for the forward and aft firewalls that seal the plenum around the engine and the passthrough plate in the airplane firewall.

Plenum forward and aft firewall removal and installation procedures have been given, but the firewalls should only have to be removed if the engine is to be returned to Pratt & Whitney.

2. Maintenance Practices

A. Forward Plenum Firewall

(1) Removal

(a) Remove the inertial separators (refer to Chapter 71-60).

(b) Remove the plenum (refer to Chapter 71-60).

(c) Remove the screws, washers, and locknuts attaching the seal strap and flexible seal to the outer perimeter of the forward firewall plenum then remove the strap and seal.

Note: Option to use PPG Aerospace fire sealant paste PR-1995 or high temp RTV to bond the flexible seal to the firewall flange.

(d) Remove the screws, washers, and locknuts attaching the gasket capture plates and gaskets to the forward plenum firewall then remove the plates and gaskets.

(e) Remove the nuts, washers, bolts, and standoffs attaching the forward plenum firewall to the flange on the engine.

(f) Remove the corner passthrough.

(g) Remove the upper middle passthrough.

(h) Remove the screws, washers, and locknuts attaching the lower section of the forward plenum firewall then remove it.

(i) Remove the screws, washers, and locknuts attaching the middle section of the forward plenum firewall then remove it.

(j) Remove the upper section of the forward plenum firewall.

(2) Installation

Note: Age 1995 sealant for 2-2.5 hours when applying to the plenum silicone seals for proper cure.

(a) Installation is the reverse of removal. Wet set screws and fill gaps using PR-1995.

(b) Install a new flexible seal using PR-1995 fire sealant paste or high temperature RTV to bond the seal to the firewall flange.

Figure 71-30.1: Forward Plenum Firewall (Sheet 1 of 7)

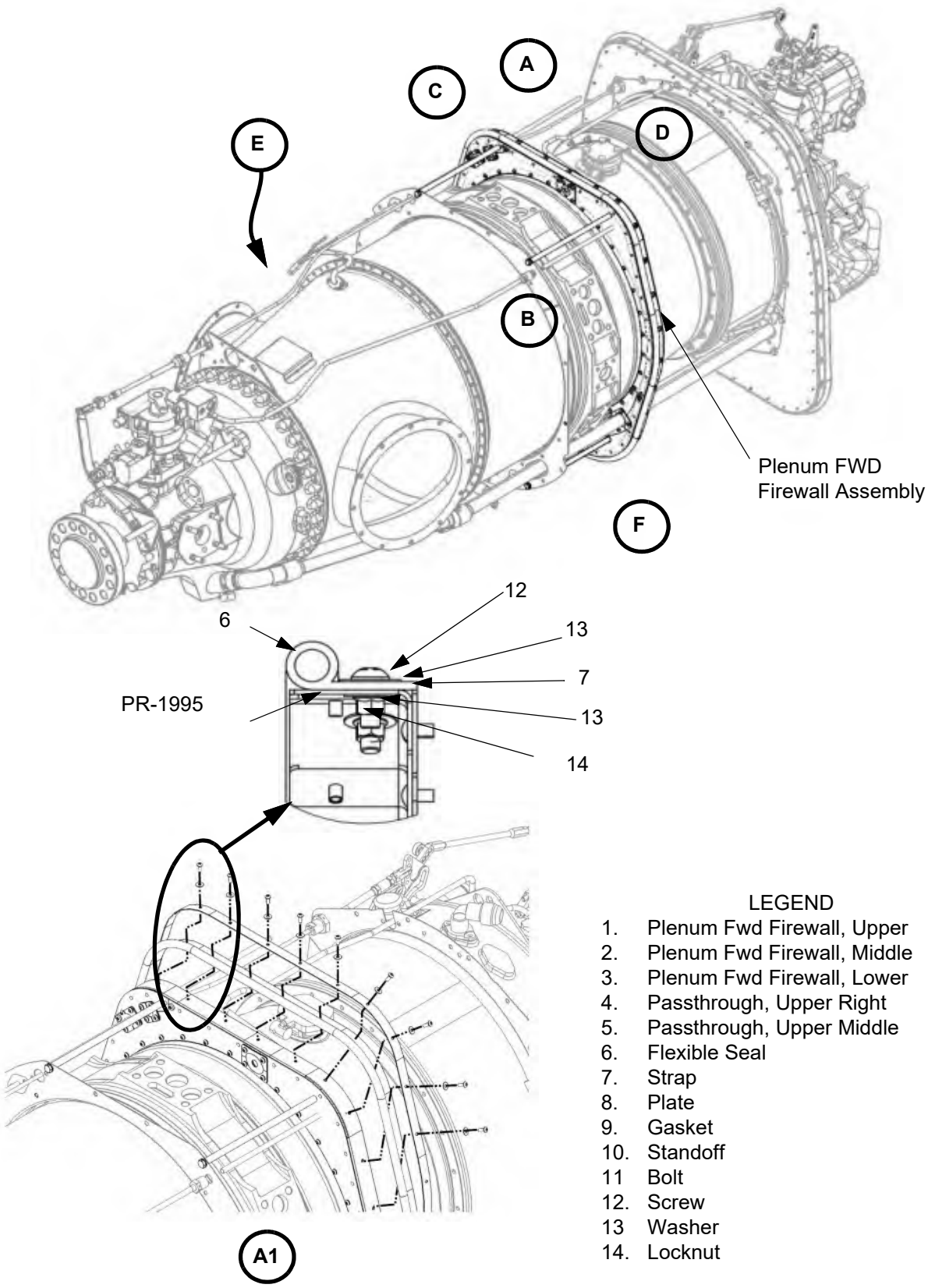

LEGEND

1. Plenum Fwd Firewall, Upper
2. Plenum Fwd Firewall, Middle
3. Plenum Fwd Firewall, Lower
4. Passthrough, Upper Right
5. Passthrough, Upper Middle
6. Flexible Seal
7. Strap
8. Plate
9. Gasket
10. Standoff
11 Bolt
12. Screw
13 Washer
14. Locknut

Figure 71-30.1: Forward Plenum Firewall (Sheet 2 of 7)

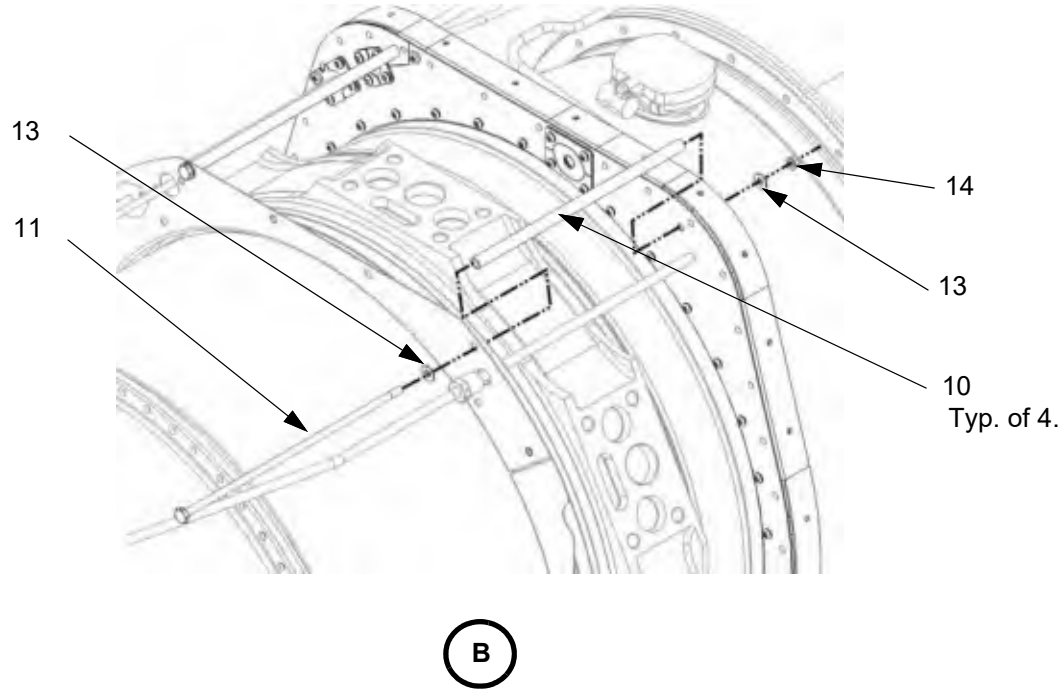

LEGEND

1. Plenum Fwd Firewall, Upper
2. Plenum Fwd Firewall, Middle
3. Plenum Fwd Firewall, Lower
4. Passthrough, Upper Right
5. Passthrough, Upper Middle
6. Flexible Seal
7. Strap
8. Plate
9. Gasket
10. Standoff
11 Bolt
12. Screw
13 Washer
14. Locknut

Figure 71-30.1: Forward Plenum Firewall (Sheet 3 of 7)

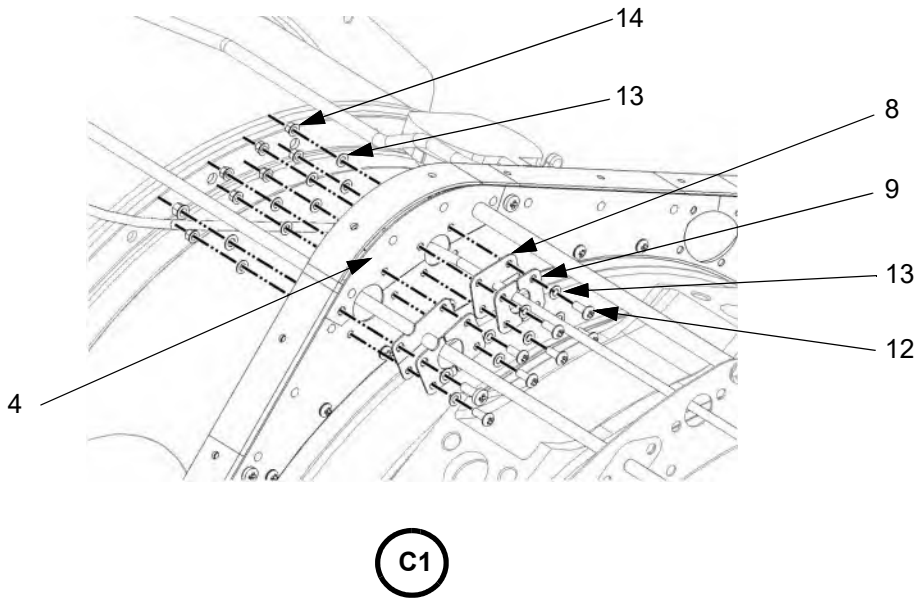

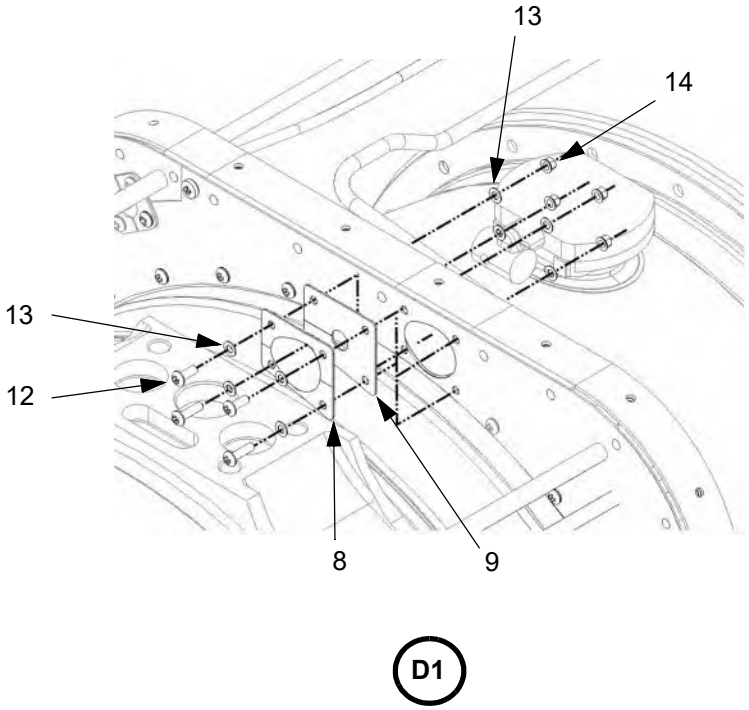

LEGEND

1. Plenum Fwd Firewall, Upper
2. Plenum Fwd Firewall, Middle
3. Plenum Fwd Firewall, Lower
4. Passthrough, Upper Right
5. Passthrough, Upper Middle
6. Flexible Seal
7. Strap
8. Plate
9. Gasket
10. Standoff
11 Bolt
12. Screw
13 Washer
14. Locknut

Figure 71-30.1: Forward Plenum Firewall (Sheet 4 of 7)

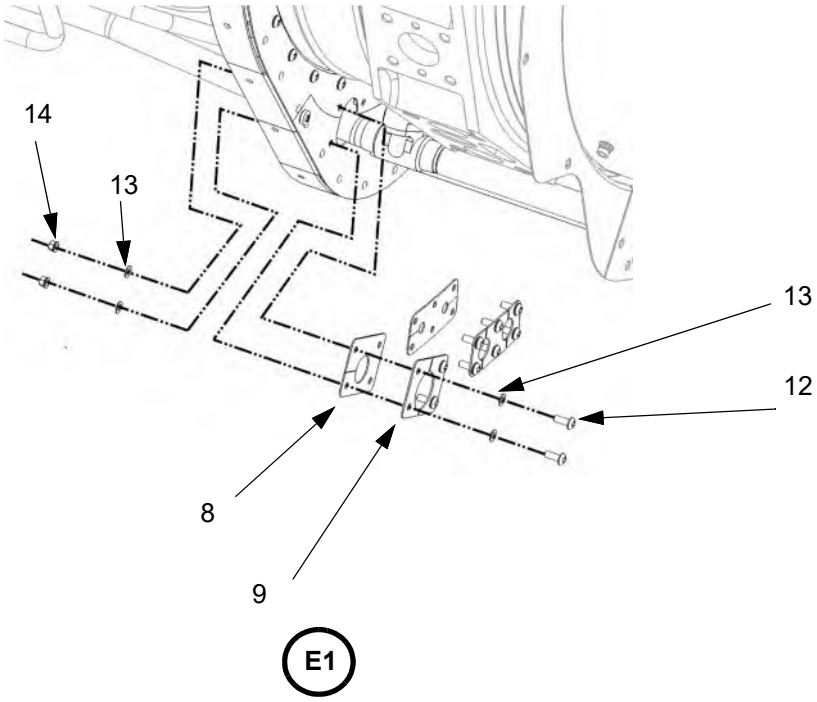

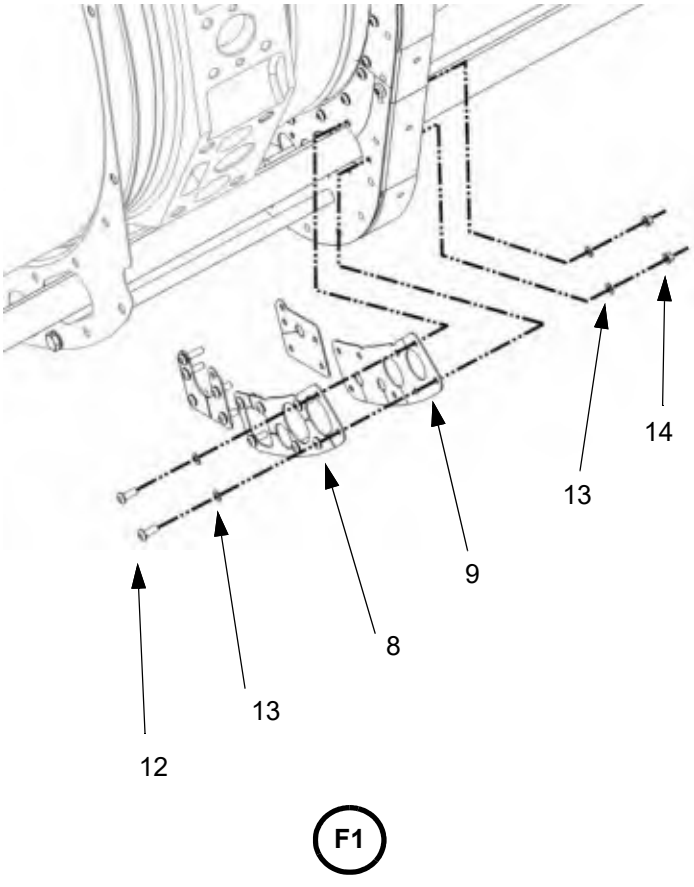

LEGEND

1. Plenum Fwd Firewall, Upper
2. Plenum Fwd Firewall, Middle
3. Plenum Fwd Firewall, Lower
4. Passthrough, Upper Right
5. Passthrough, Upper Middle
6. Flexible Seal
7. Strap
8. Plate
9. Gasket
10. Standoff
11 Bolt
12. Screw
13 Washer
14. Locknut

Figure 71-30.1: Forward Plenum Firewall (Sheet 5 of 7)

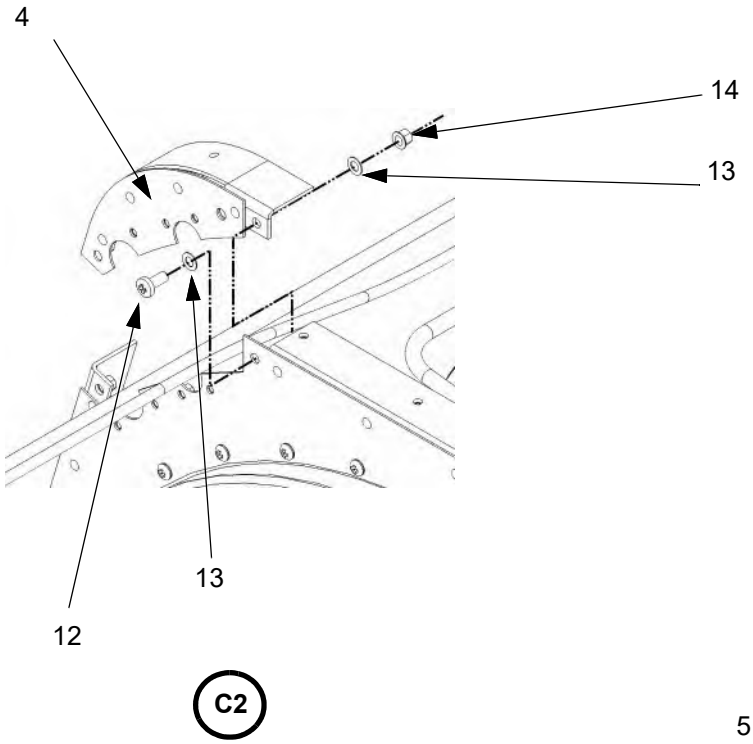

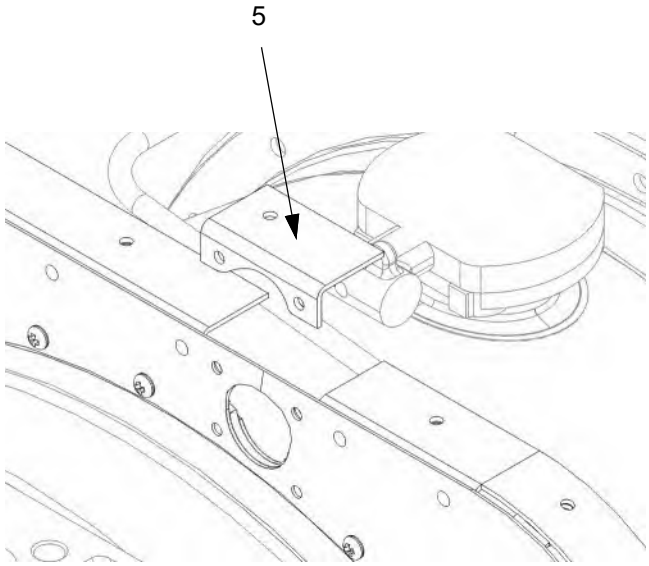

LEGEND

1. Plenum Fwd Firewall, Upper
2. Plenum Fwd Firewall, Middle
3. Plenum Fwd Firewall, Lower
4. Passthrough, Upper Right
5. Passthrough, Upper Middle
6. Flexible Seal
7. Strap
8. Plate
9. Gasket
10. Standoff
11 Bolt
12. Screw
13 Washer
14. Locknut

Figure 71-30.1: Forward Plenum Firewall (Sheet 6 of 7)

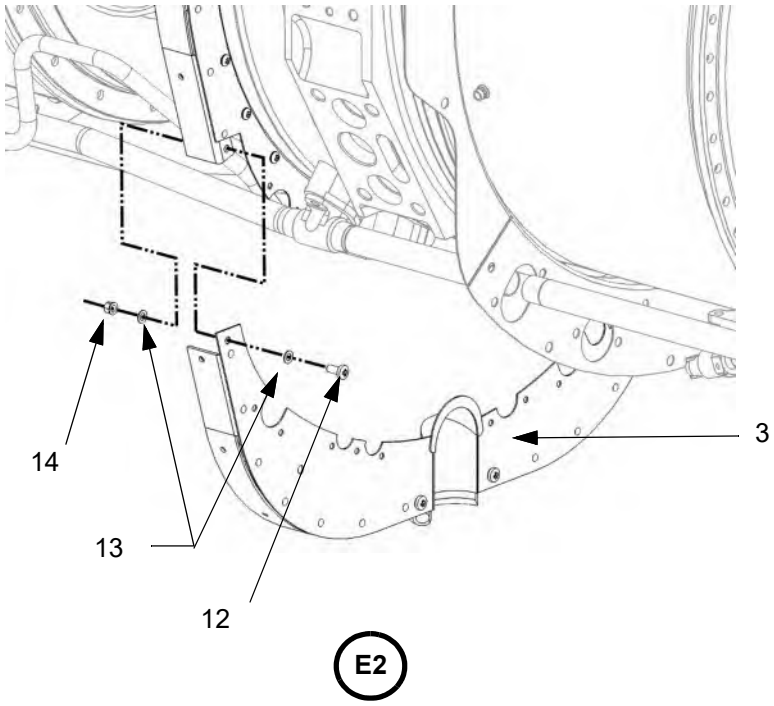

LEGEND

1. Plenum Fwd Firewall, Upper
2. Plenum Fwd Firewall, Middle
3. Plenum Fwd Firewall, Lower
4. Passthrough, Upper Right
5. Passthrough, Upper Middle
6. Flexible Seal
7. Strap
8. Plate
9. Gasket
10. Standoff
11 Bolt
12. Screw
13 Washer
14. Locknut

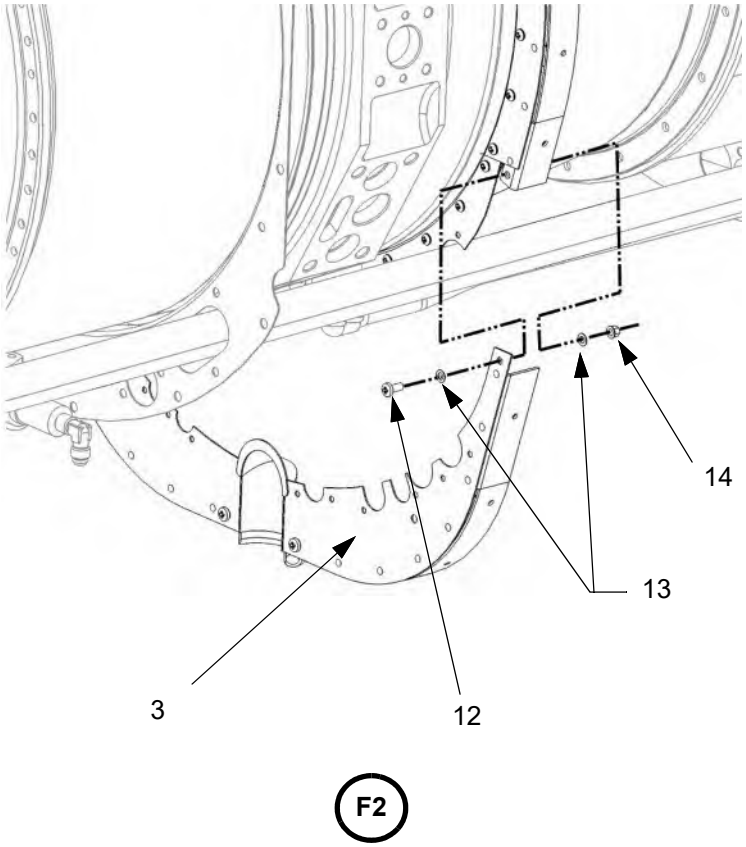

Figure 71-30.1: Forward Plenum Firewall (Sheet 7 of 7)

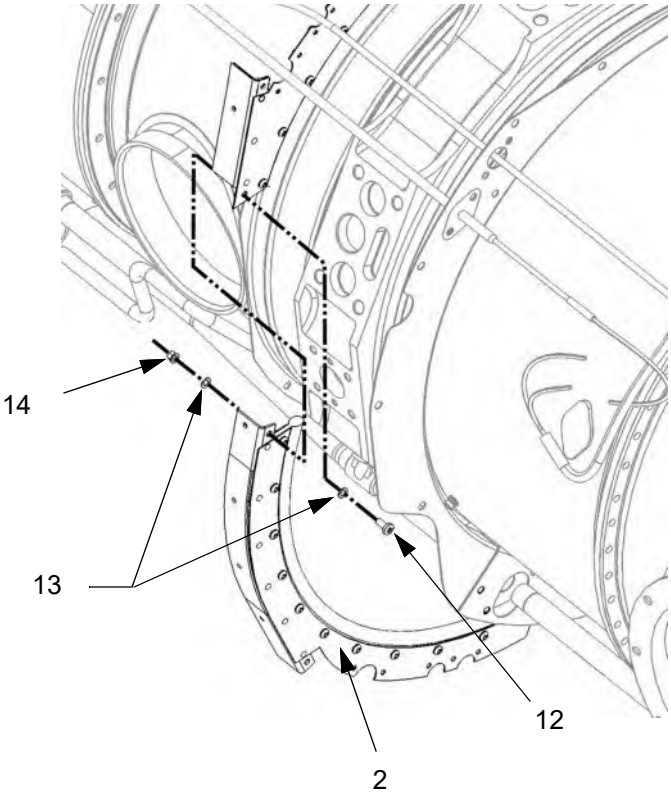

E3

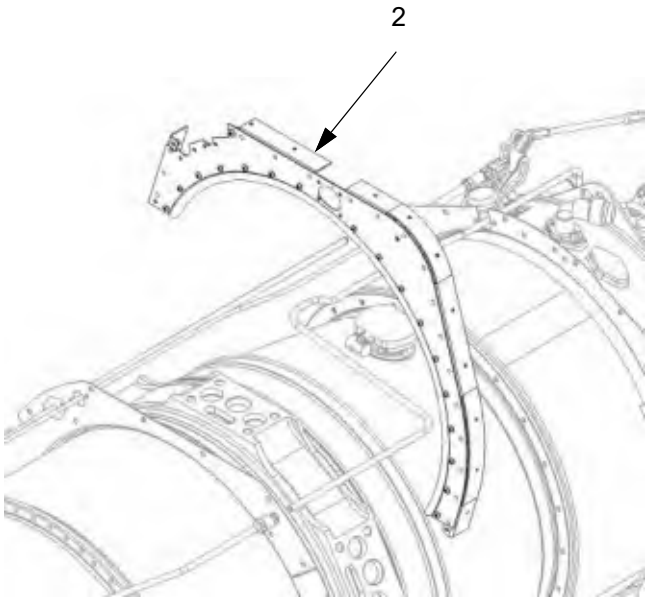

A2

LEGEND

1. Plenum Fwd Firewall, Upper
2. Plenum Fwd Firewall, Middle
3. Plenum Fwd Firewall, Lower
4. Passthrough, Upper Right
5. Passthrough, Upper Middle
6. Flexible Seal
7. Strap
8. Plate
9. Gasket
10. Standoff
11 Bolt
12. Screw
13 Washer
14. Locknut

B. Aft Plenum Firewall

(1) Removal

(a) Remove the inertial separators (refer to Chapter 71-60).

(b) Remove the plenum (refer to Chapter 71-60).

(c) Remove the nuts, washers, and bolts attaching the aft plenum firewall to the flange on the engine.

(d) Remove the left and right halves of the aft plenum firewall from the engine.

(2) Installation

Note: Age 1995 sealant for 2-2.5 hours when applying to the plenum silicone seals for proper cure.

(a) Installation is the reverse of removal. Wet set screws and fill gaps using PR-1995 or high temperature RTV.

Figure 71-30.2: Aft Plenum Firewall (Sheet 1 of 2)

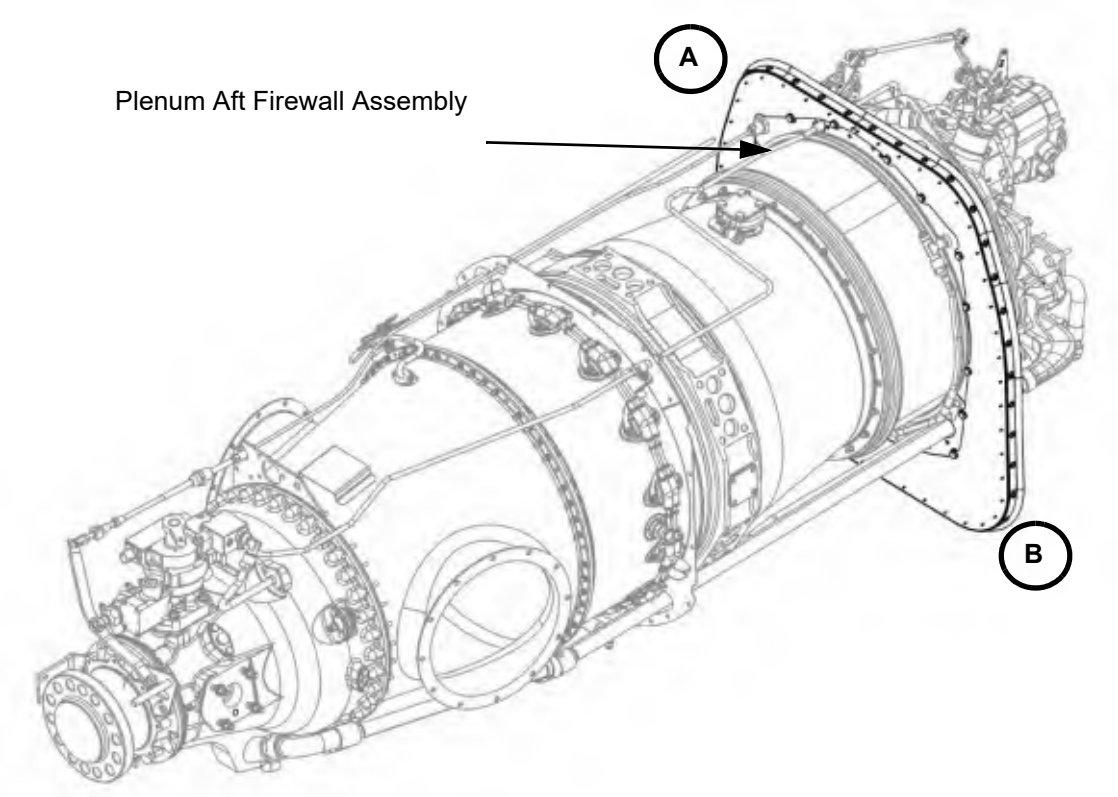

LEGEND

1. Plenum Aft Firewall, Right
2. Plenum Aft Firewall, Left
3. Bolt
4. Washer
5. Locknut

Figure 71-30.3: Aft Plenum Firewall (Sheet 2 of 2)

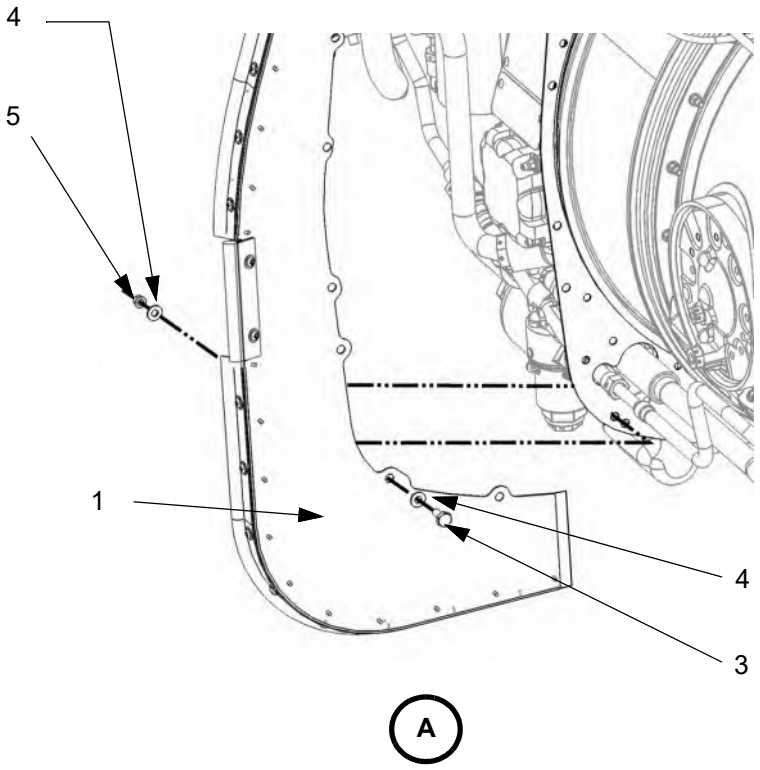

Bolt, washer, and locknut installation is typical of 8.

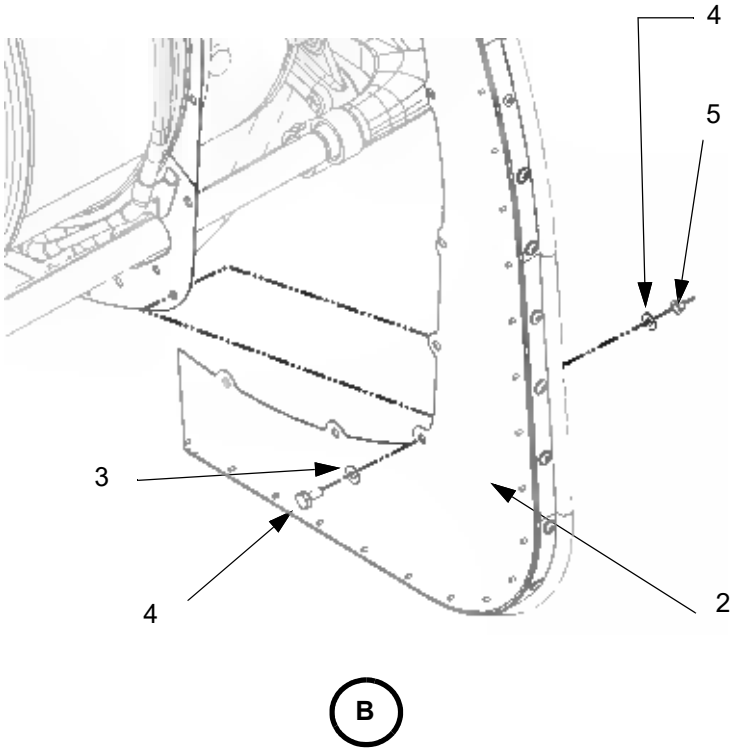

Bolt, washer, and locknut installation is typical of 9.

LEGEND

1. Plenum Aft Firewall, Right
2. Plenum Aft Firewall, Left
3. Flexible Seal
4. Strap
5. Screw
6. Washer
7. Locknut
8. Rivet

Figure 71-30.3: Aft Plenum Firewall Components (Sheet 1of 2)

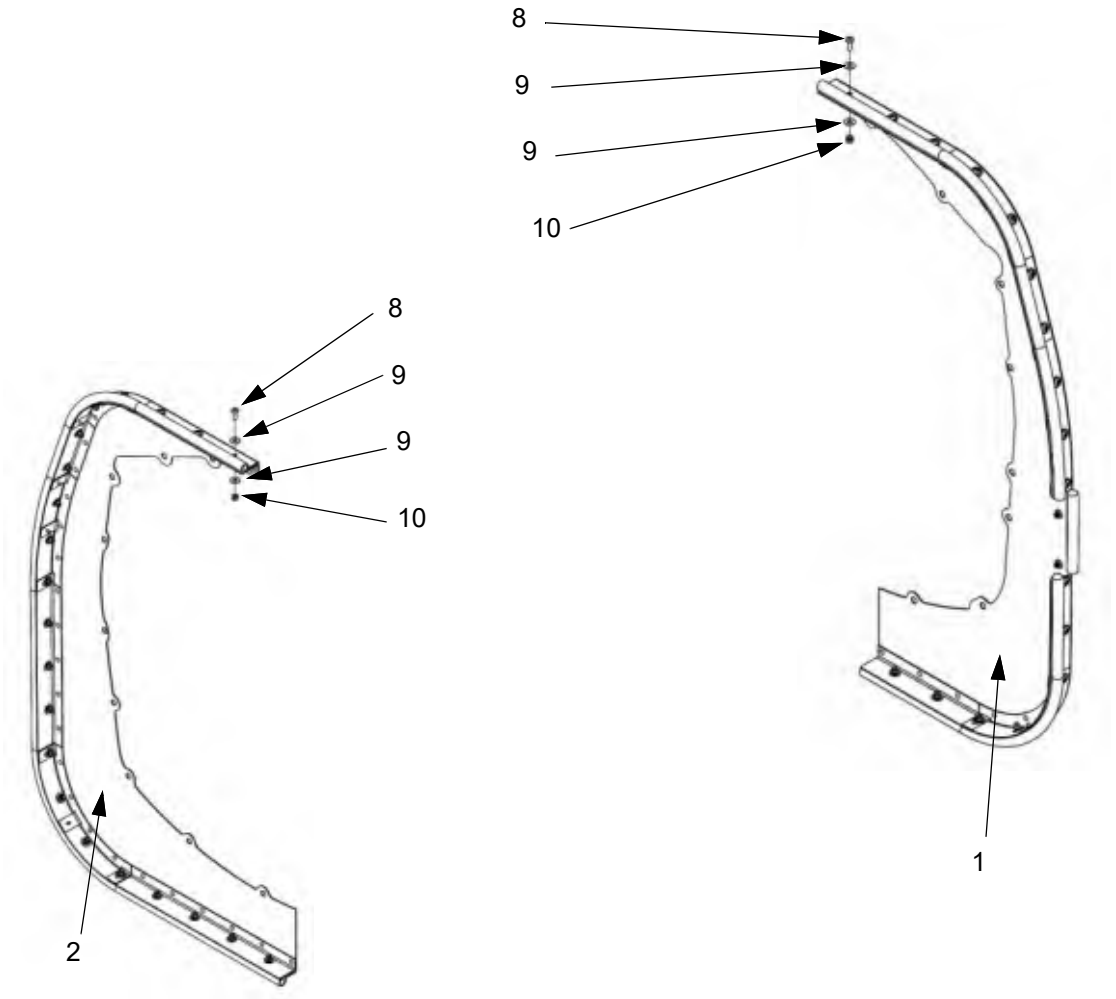

LEGEND

1. Plenum Aft Firewall, Right
2. Plenum Aft Firewall, Left
3. Face
4. Flange
5. Bracket
6. Flexible Seal
7. Strap
8. Screw
9. Washer
10. Locknut
11. Rivet

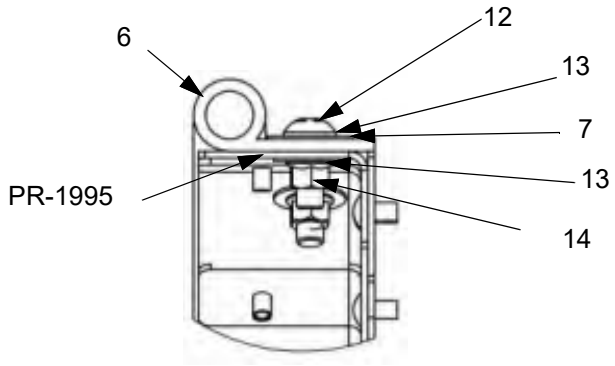

FLEXIBLE SEAL INSTALLATION
(TYPICAL)

C. Firewall Plate

(1) Removal

(a) Set the BATT 1 and BATT 2 switches to OFF.

(b) Disconnect external electrical power from the airplane (refer to Chapter 24-40).

(c) Remove the cowling (refer to Chapter 71-10).

(d) Disconnect the propeller and engine control cables from the power quadrant.

(e) Unfasten the firewall blanket penetration panels then slide them along the electrical wiring harness and the engine control cables.

(f) Disconnect the electrical wiring harnesses and ground cables from the firewall plate.

(g) Remove the bolts and washers attaching the ring plate and the firewall plate to the firewall.

(h) Using caution remove any fuel tank sealant between the firewall plate, ring plate, and the firewall.

WARNING: Do not use metallic scrapers that could damage the wing during sealant removal. Plastic scrapers are recommended.

(i) Remove the ring plate and the firewall plate from the airplane.

(2) Installation

(a) Remove all of the sealant from the ring plate, firewall plate, and fuselage using a plastic razor blade. Hold the razor blade as flat as possible. Do not sand the fuselage.

(b) Clean the bonding surfaces using isopropyl alcohol.

(c) Apply PPG Aerospace fire sealant paste PR-1995 to the ring plate and the firewall plate where they touch the fuselage.

(d) Ensure the engine control cables and electrical wiring harness are correctly inserted into the firewall blanket penetration panels.

(e) Insert the propeller and engine control cables through the applicable bulkhead fitting in the firewall plate.

(f) Apply PPG Aerospace fire sealant paste PR-1995 to the bulkhead fittings to form a seal with the firewall plate.

(g) Apply Loctite™ 242 to the bulkhead fitting nut then torque the nut 15 to 20 ft-lbs.

(h) Attach the ring plate and the firewall plate to the firewall using bolts and washers.

(i) Let the fire sealant paste fully cure (refer to the sealant manufacturer's instructions).

(j) Attach the propeller and engine control cables to the power quadrant.

(k) Attach the electrical wiring harnesses and ground cables to the connectors in the firewall plate.

(l) Install the firewall blanket penetration panels.

(m) Install the cowling (refer to Chapter 71-10).

Figure 71-30.4: Firewall Plate

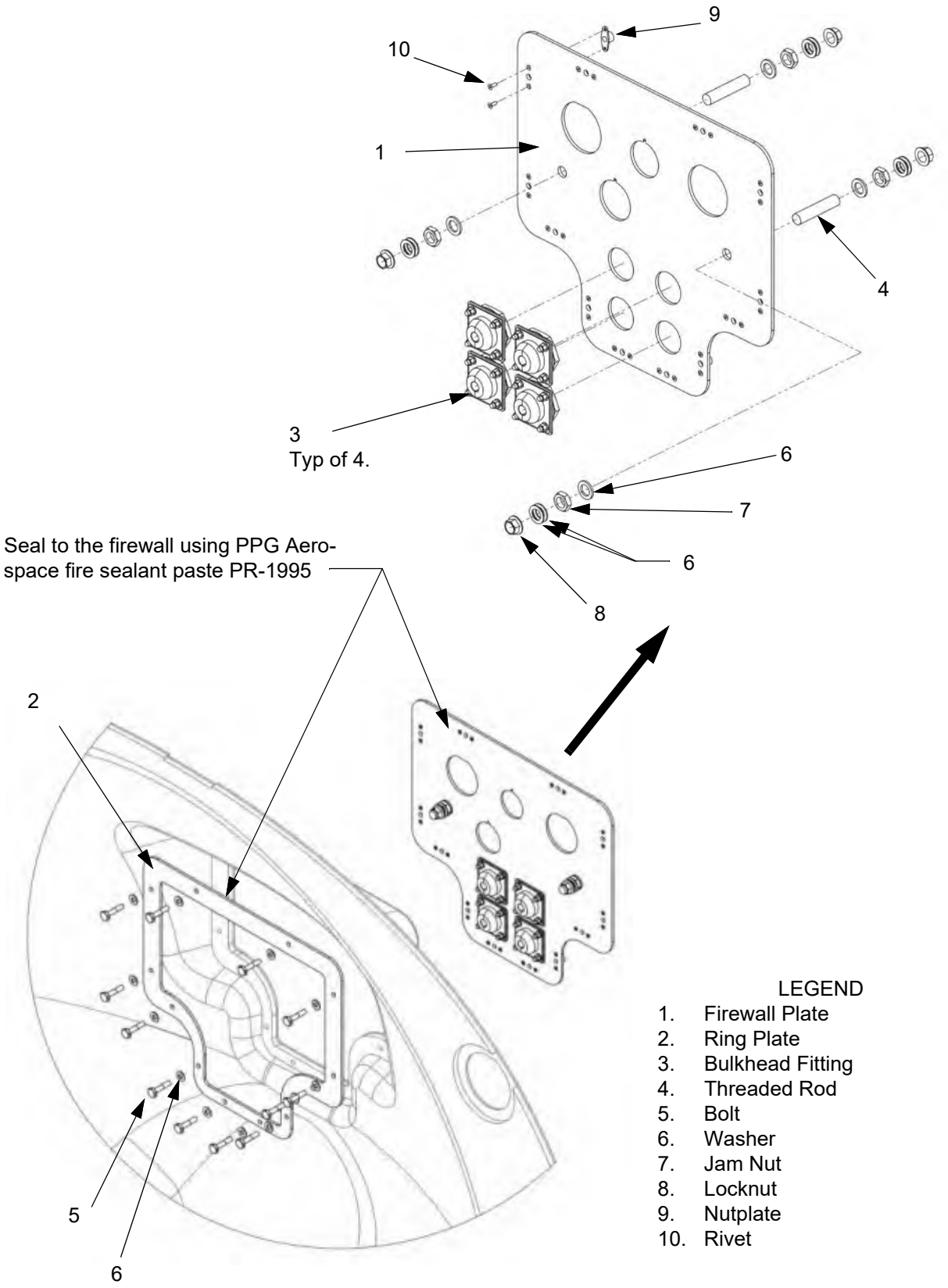

LEGEND

1. Firewall Plate
2. Ring Plate
3. Bulkhead Fitting
4. Threaded Rod
5. Bolt
6. Washer
7. Jam Nut
8. Locknut
9. Nutplate
10. Rivet

D. Firewall Blanket Penetration Panels

Penetrations in the firewall blanket are reinforced and sealed using flexible and flameproof snap-on firewall blanket penetration panels.

WARNING: Flight without all of the firewall blanket penetration panels installed and undamaged is prohibited.

(1) Removal
   (a) Remove the cowling (refer to Chapter 71-10).
   (b) Hold the corner or edge of the firewall blanket penetration panel to be removed then pull outward to separate the snap fasteners.
   (c) Remove the penetration panel.

(2) Installation
   (a) Hold the firewall blanket penetration panel in its location on the firewall.
   (b) Press and engage the snap fasteners on the firewall blanket and on the penetration panels.
   (c) Install the cowling (refer to Chapter 71-10).

E. Engine Mount Wraps

Penetrations in the firewall blanket where the engine mount is attached are sealed using flexible and flameproof snap-on wraps.

WARNING: Flight without all of the engine mount wraps installed and undamaged is prohibited.

(1) Removal
   (a) Remove the cowling (refer to Chapter 71-10).
   (b) Hold the corner or edge of the wrap to be removed then pull outward to separate the snap fasteners.
   (c) Remove the wrap.

(2) Installation
   (a) Hold the wrap in its location on engine mount.
   (b) Press and engage the snap fasteners on the wrap.
   (c) Install the cowling (refer to Chapter 71-10).

Figure 71-30.5: Firewall Blanket Penetration Panels and Wraps (Sheet 1 of 4)

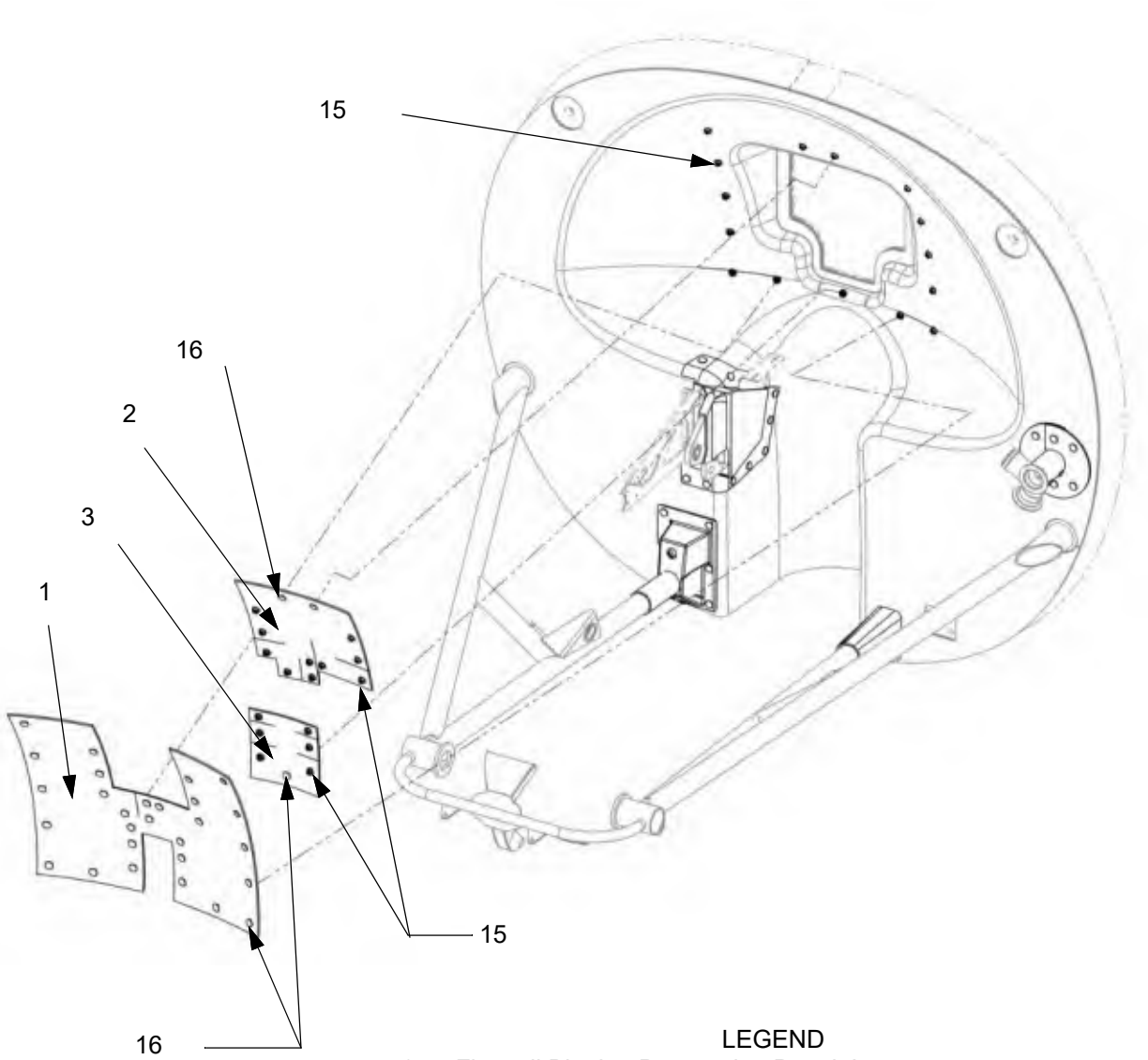

LEGEND

1. Firewall Blanket Penetration Panel, Large
2. Firewall Blanket Penetration Panel, Medium
3. Firewall Blanket Penetration Panel, Small
4. Firewall Blanket Penetration Panel, Actuator Bracket
5. Firewall Blanket Penetration Panel, Distribution Duct, RH
6. Firewall Blanket Penetration Panel, Distribution Duct, LH
7. Firewall Blanket Penetration Panel, Engine Mount
8. Engine Mount Wrap, Upper Left
9. Engine Mount Wrap, Upper Right
10. Engine Mount Wrap, Middle Left
11. Engine Mount Wrap, Middle Right
12. Engine Mount Wrap, Lower Left
13. Engine Mount Wrap, Lower Right
14. Manifold Blanket Tube
15. Snap Fastener Half, Male
16. Snap Fastener Half, Female

Figure 71-30.6: Firewall Blanket Penetration Panels and Wraps (Sheet 2 of 4)

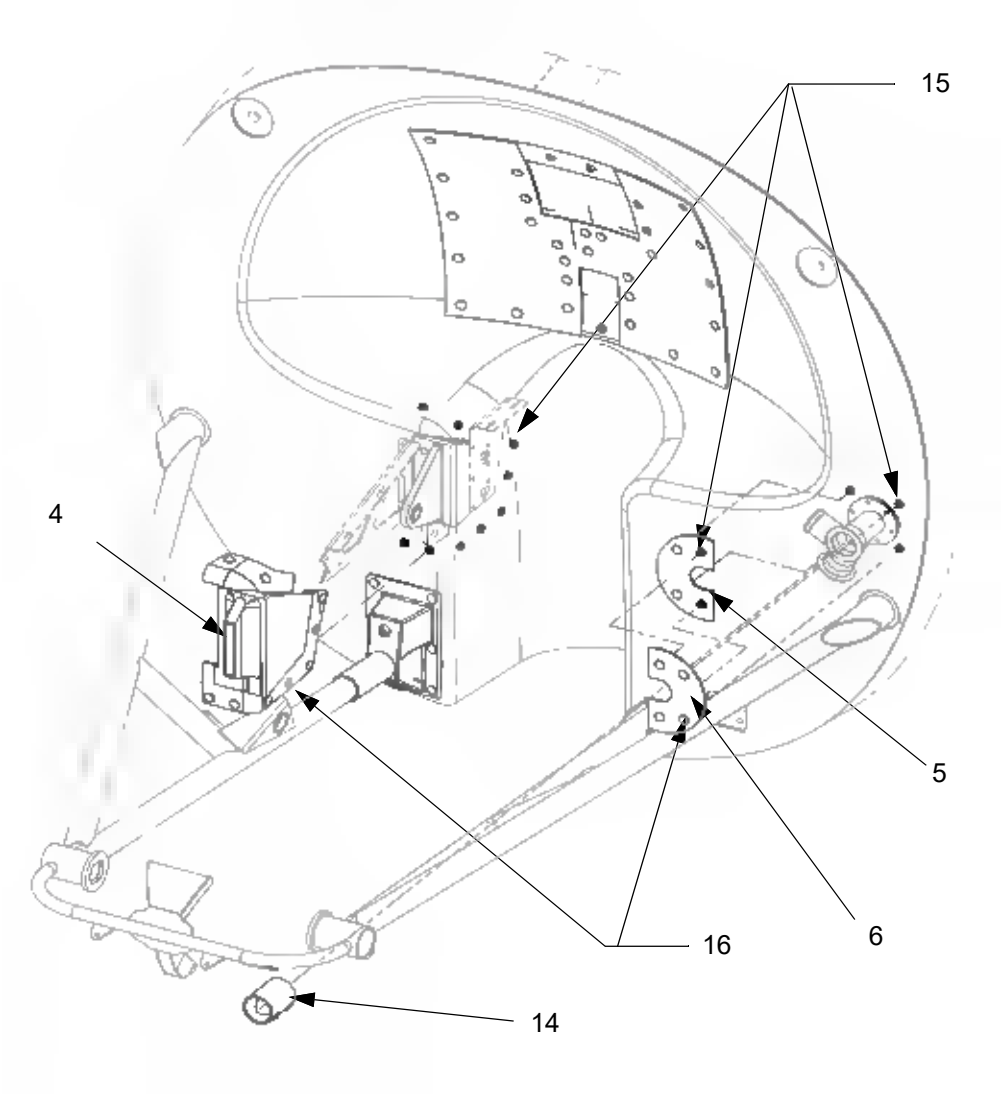

LEGEND

1. Firewall Blanket Penetration Panel, Large
2. Firewall Blanket Penetration Panel, Medium
3. Firewall Blanket Penetration Panel, Small
4. Firewall Blanket Penetration Panel, Actuator Bracket
5. Firewall Blanket Penetration Panel, Distribution Duct, RH
6. Firewall Blanket Penetration Panel, Distribution Duct, LH
7. Firewall Blanket Penetration Panel, Engine Mount
8. Engine Mount Wrap, Upper Left
9. Engine Mount Wrap, Upper Right
10. Engine Mount Wrap, Middle Left
11. Engine Mount Wrap, Middle Right
12. Engine Mount Wrap, Lower Left
13. Engine Mount Wrap, Lower Right
14. Manifold Wrap
15. Snap Fastener Half, Male
16. Snap Fastener Half, Female

Figure 71-30.6: Firewall Blanket Penetration Panels and Wraps (Sheet 3 of 4)

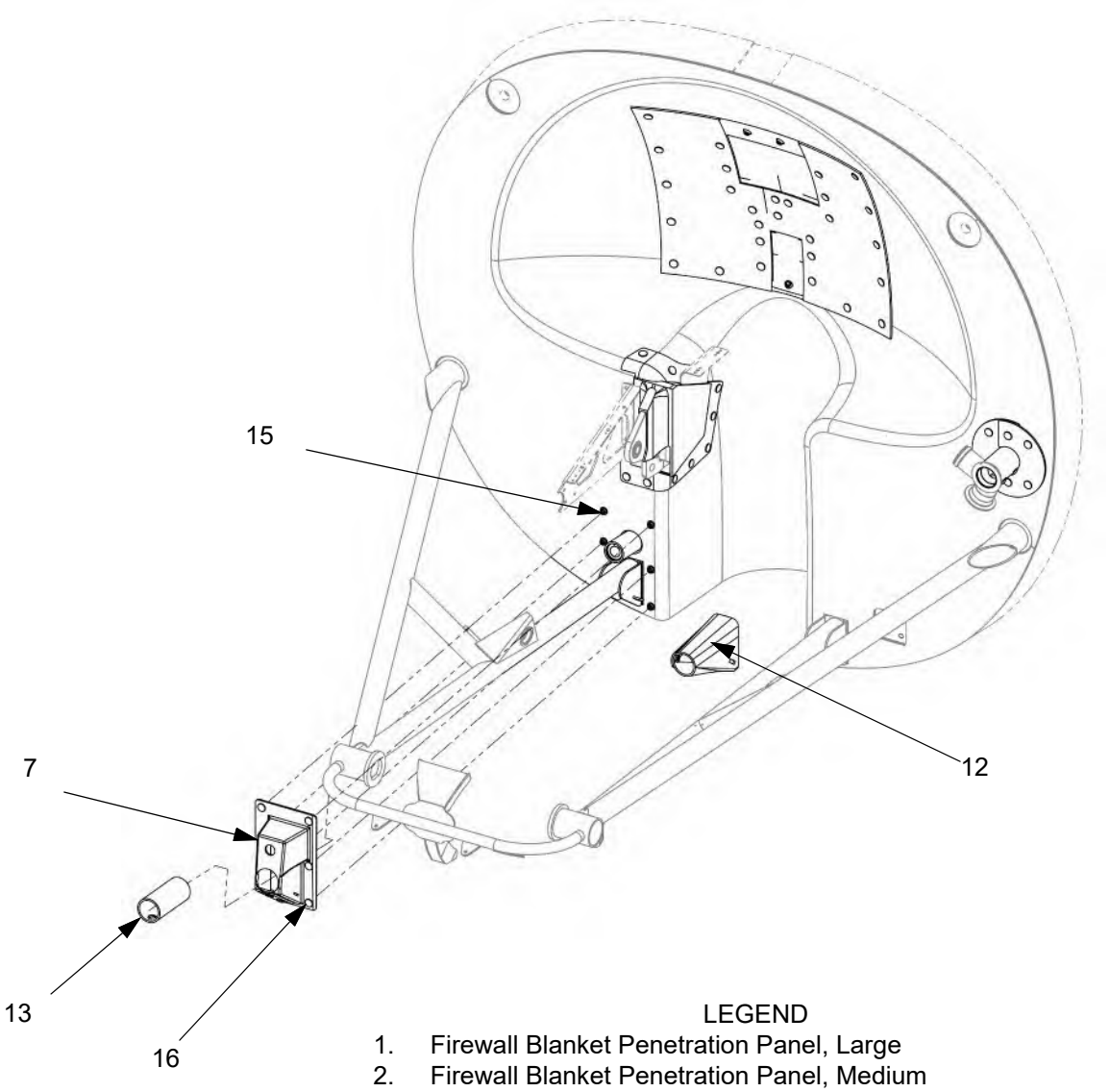

LEGEND

1. Firewall Blanket Penetration Panel, Large
2. Firewall Blanket Penetration Panel, Medium
3. Firewall Blanket Penetration Panel, Small
4. Firewall Blanket Penetration Panel, Actuator Bracket
5. Firewall Blanket Penetration Panel, Distribution Duct, RH
6. Firewall Blanket Penetration Panel, Distribution Duct, LH
7. Firewall Blanket Penetration Panel, Engine Mount
8. Engine Mount Wrap, Upper Left
9. Engine Mount Wrap, Upper Right
10. Engine Mount Wrap, Middle Left
11. Engine Mount Wrap, Middle Right
12. Engine Mount Wrap, Lower Left
13. Engine Mount Wrap, Lower Right
14. Manifold Wrap
15. Snap Fastener Half, Male
16. Snap Fastener Half, Female

Figure 71-30.6: Firewall Blanket Penetration Panels and Wraps (Sheet 4 of 4)

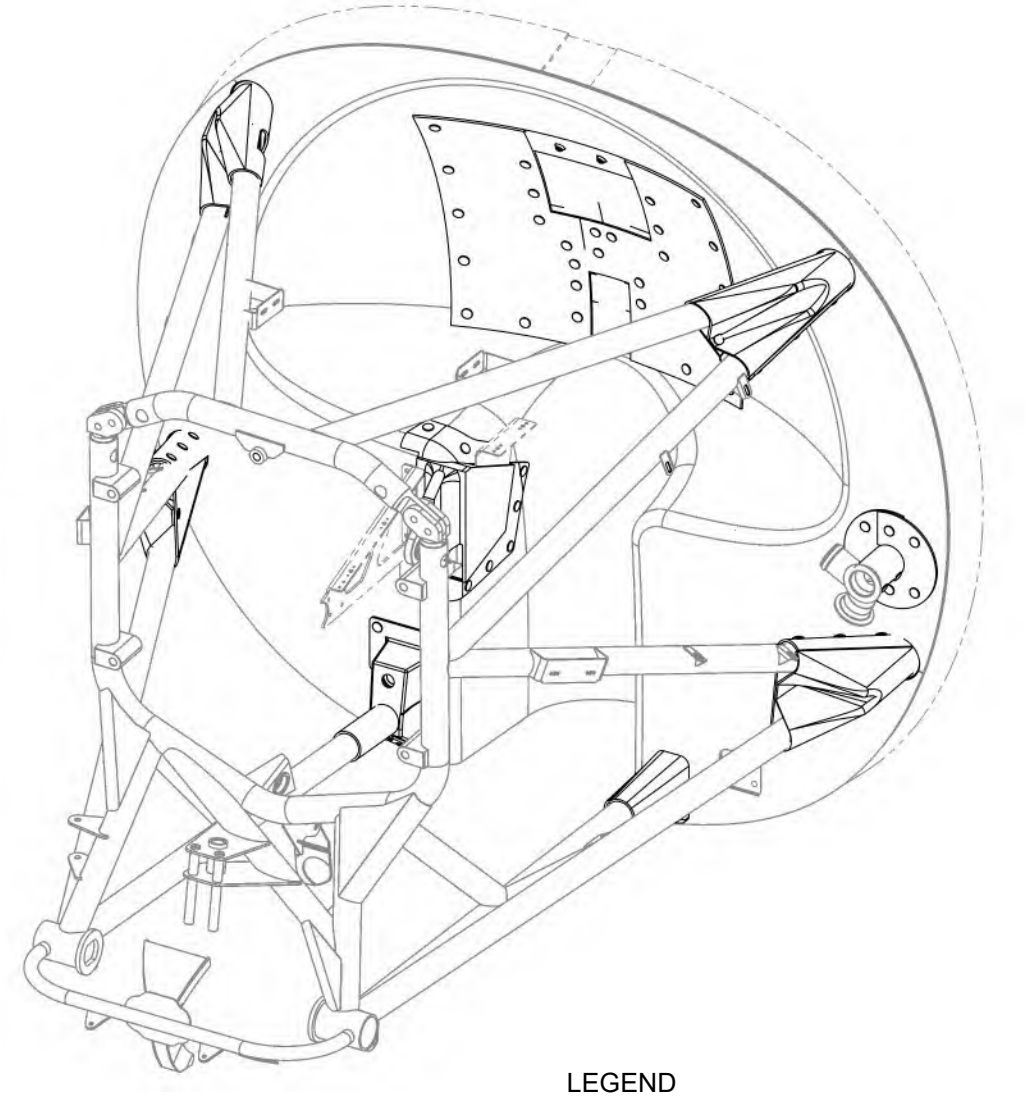

LEGEND

1. Firewall Blanket Penetration Panel, Large
2. Firewall Blanket Penetration Panel, Medium
3. Firewall Blanket Penetration Panel, Small
4. Firewall Blanket Penetration Panel, Actuator Bracket
5. Firewall Blanket Penetration Panel, Distribution Duct, RH
6. Firewall Blanket Penetration Panel, Distribution Duct, LH
7. Firewall Blanket Penetration Panel, Engine Mount
8. Engine Mount Wrap, Upper Left
9. Engine Mount Wrap, Upper Right
10. Engine Mount Wrap, Middle Left
11. Engine Mount Wrap, Middle Right
12. Engine Mount Wrap, Lower Left
13. Engine Mount Wrap, Lower Right
14. Manifold Wrap
15. Snap Fastener Half, Male
16. Snap Fastener Half, Female

F. Inspection

(1) Remove the cowling (refer to Chapter 71-10).

(2) Remove the inertial separators (refer to Chapter 71-60).

(3) Inspect the attachment hardware for condition and security.

(4) Inspect the flexible seal around the interior and exterior perimeters for condition and security.

(5) Inspect the frame and face panel of the forward and aft plenum firewalls for condition and security.

(6) Inspect the firewall blanket penetration panels for condition and security.

(7) Inspect the engine mount blankets for condition and security.

(8) Inspect the firewall plate and attachment hardware for condition and security.

ELECTRICAL HARNESS

1. Description

This chapter gives information and procedures for the engine electrical harnesses.

Three electrical wiring harnesses are used to connect the starter/generator, backup alternator, master control unit (MCU), fuel flow meter, oil pressure transducer, oil temperature sensor, ground power receptacle, and aircraft batteries to the airplane electrical system.

K003-K085 (except K014), refer to the current revision of the E1000 Wiring Manual, P/N SK05000002.

K014, K086 and on, refer to the current revision of the E1000 Wiring Manual, P/N SK05003002.

2. Maintenance Practices

A. Electrical Harness

(1) Removal

(a) Set the BATT 1 and BATT 2 switches to OFF.

(b) Disconnect external electrical power from the airplane (refer to Chapter 24-40).

(c) Remove the cowling (refer to Chapter 71-10).

(d) Disconnect the aircraft batteries by disconnecting the negative battery cables first then the positive battery cables.

WARNING: To reduce the possibility of personal injury and equipment damage, disconnect the negative battery cable before disconnecting the positive battery cable.

(e) Insulate the battery terminals.

(f) Disconnect the equipment and components connected to the wiring harnesses.

(g) Tag the connectors.

(h) Cut cable ties.

(i) Loosen clamps.

(j) Disconnect the wiring harnesses from the firewall connectors.

(k) Remove the harnesses from the airplane.

(2) Installation

(a) Route the wiring harnesses then make connections to the tagged connectors.

Note: Apply fire sleeve to wiring and propeller control cable in the areas shown (refer to SAE AS1072). Fire sleeve may be ranged in size as necessary, split length wise and attached after installation using safety wire or nomex yarn (refer to the latest revision of Military Standard MS20995). Ensure sleeving completely covers wiring and cable in the shown area.

Note: Verify the ground fault transformer arrows pointed are towards the starter/generator.

(b) Attach the harnesses using cable ties and clamps.

Note: Do not attach the harnesses to bleed air, fuel, hydraulic, or oil lines.

Note: Three of the clamps attaching the MCU Engine Instruments electrical harness are attached to the engine using a 90° bracket and engine nuts. On re-installation of the harness, torque the nuts 36 to 40 in.-lbs.

(c) Connect the harnesses to the firewall connectors.

(d) Connect the aircraft batteries starting with the positive battery cables then the negative cables.

WARNING: To reduce the possibility of personal injury and equipment damage, connect the positive battery cable before connecting the negative battery cable.

(e) Do an operational check of the engine and the cockpit instrumentation.

(f) Install the cowling (refer to Chapter 71-10).

(3) Inspection

(a) Set the BATT 1 and BATT 2 switches to OFF.

(b) Disconnect external electrical power from the airplane (refer to Chapter 24-40).

(c) Remove the cowling (refer to Chapter 71-10).

(d) Do a visual inspection of the wiring harness.

(e) Install the cowling (refer to Chapter 71-10).

Figure 71-50.1: Engine Electrical Wiring Harnesses (Sheet 1 of 17)

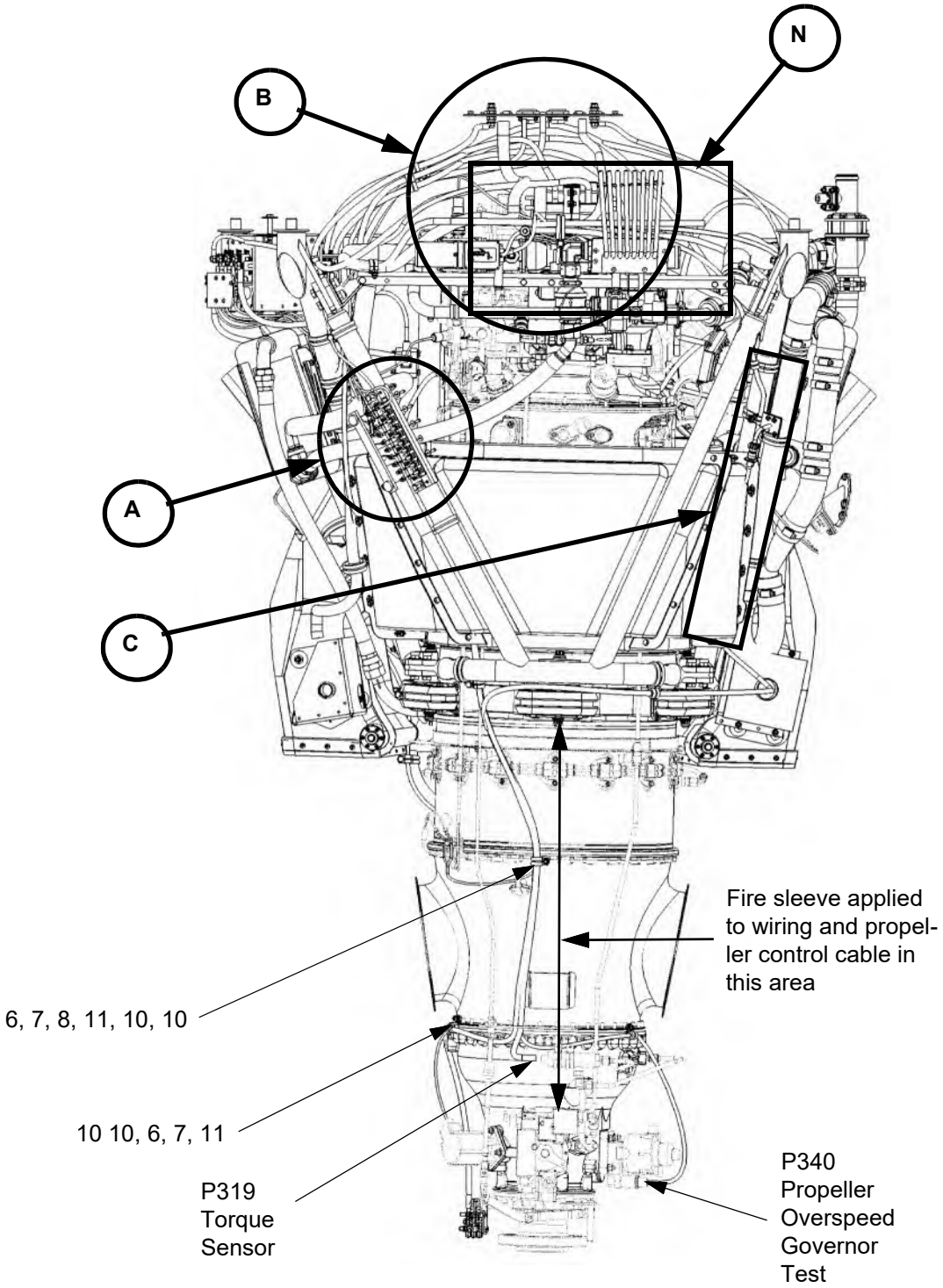

Top View

Figure 71-50.1: Engine Electrical Wiring Harnesses (Sheet 2 of 17)

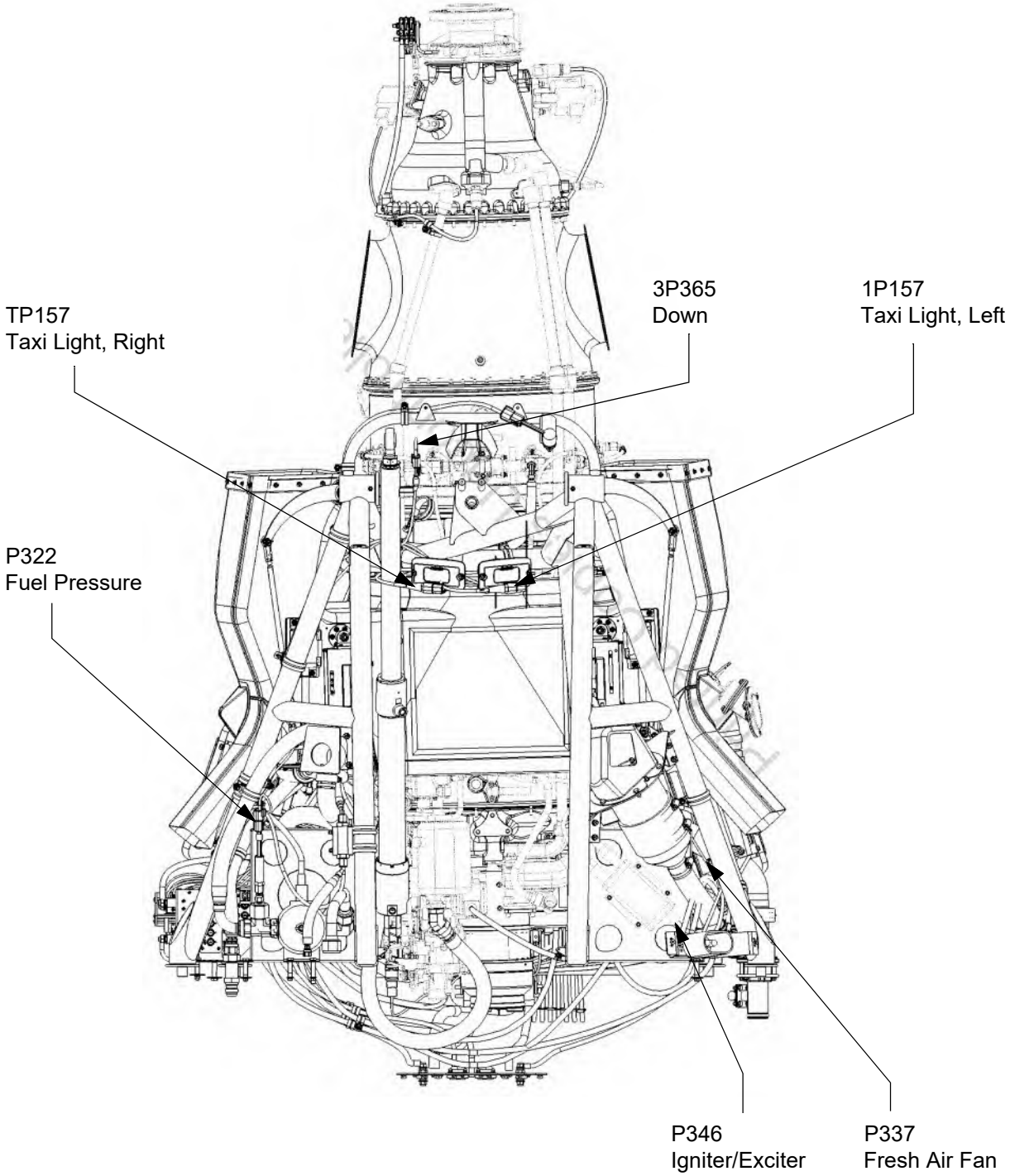

Bottom View

Figure 71-50.1: Engine Electrical Wiring Harnesses (Sheet 3 of 17)

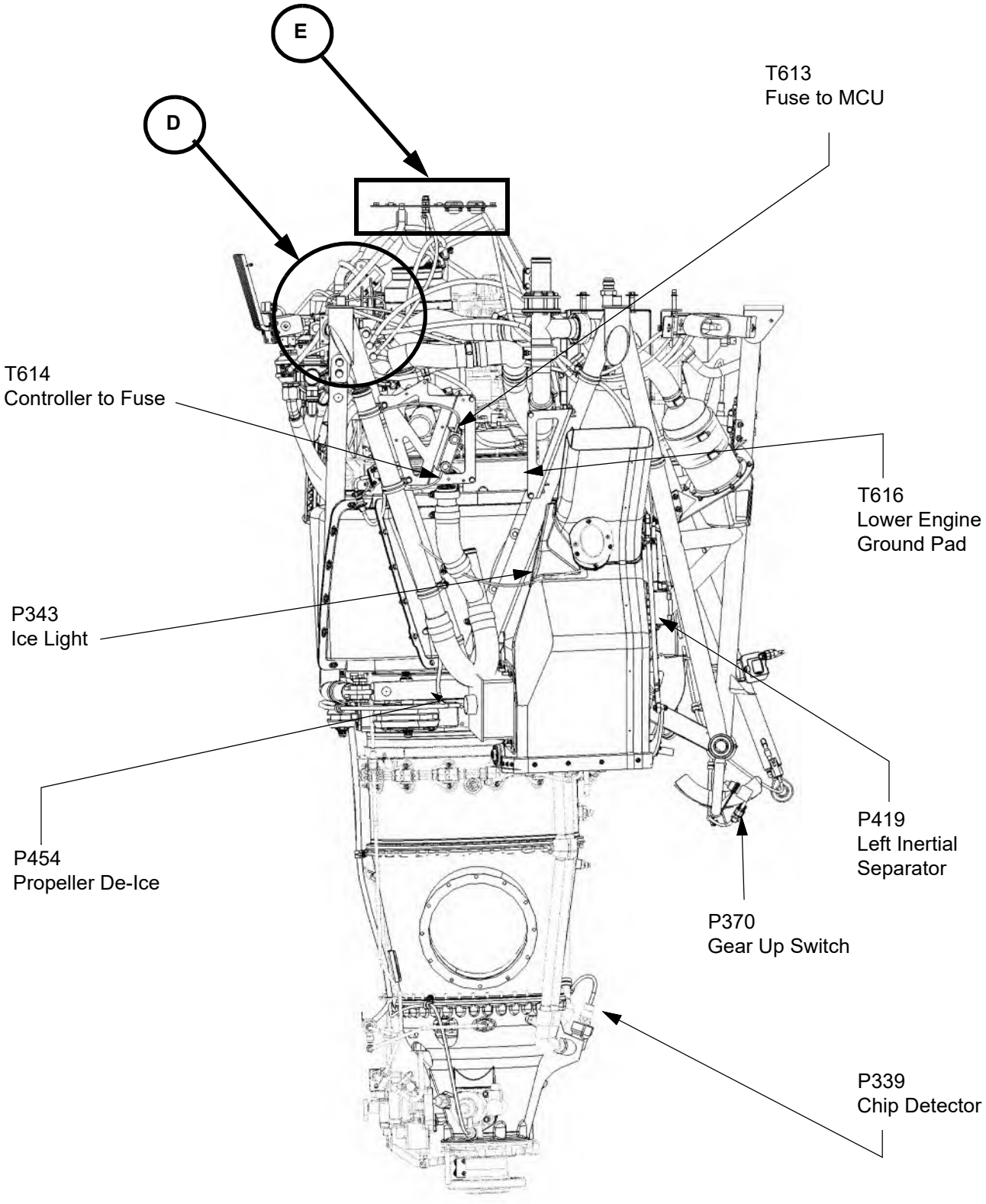

Pilot Side View

Figure 71-50.1: Engine Electrical Wiring Harnesses (Sheet 4 of 17)

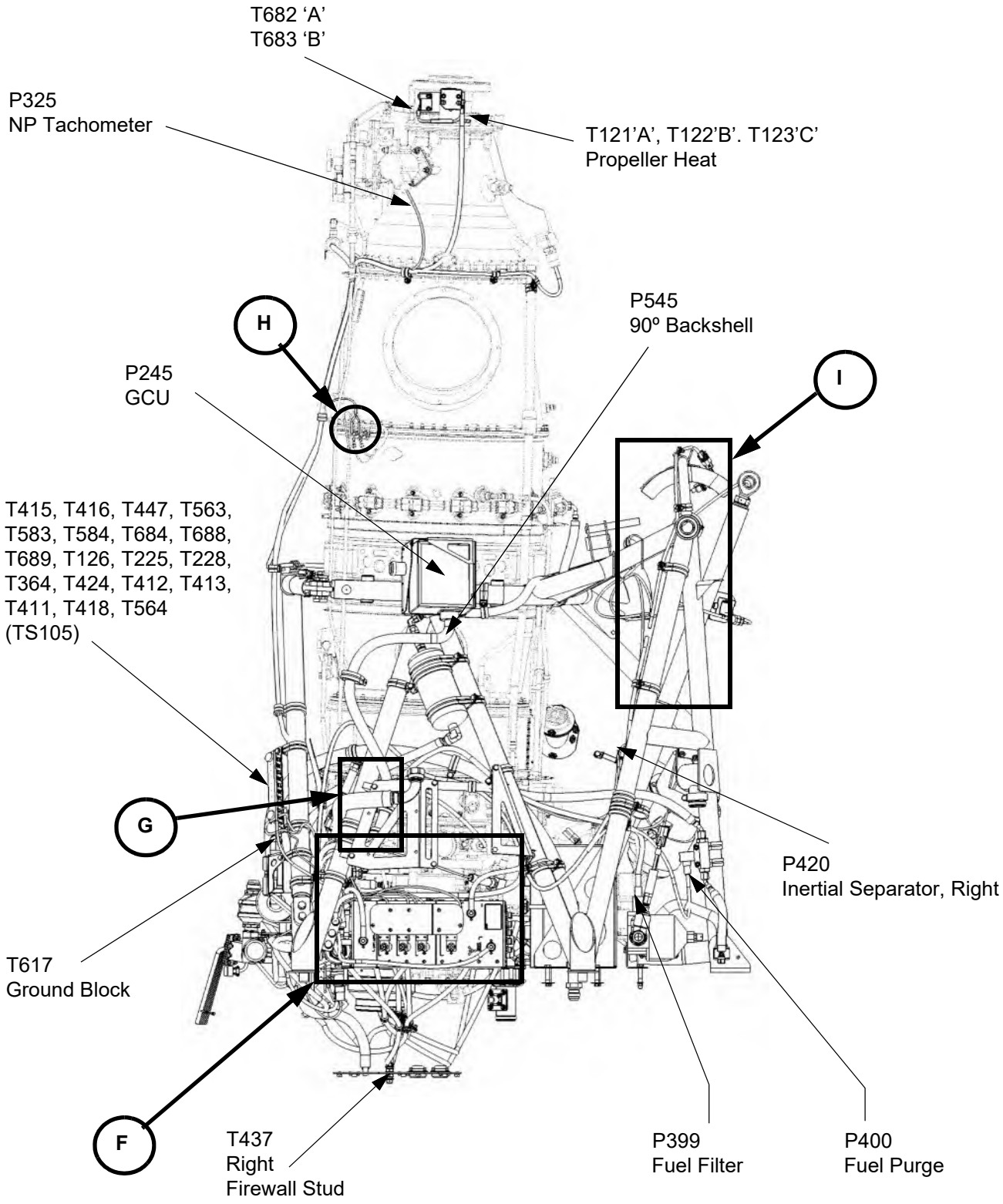

Copilot Side View

Figure 71-50.1: Engine Electrical Wiring Harnesses (Sheet 5 of 17)

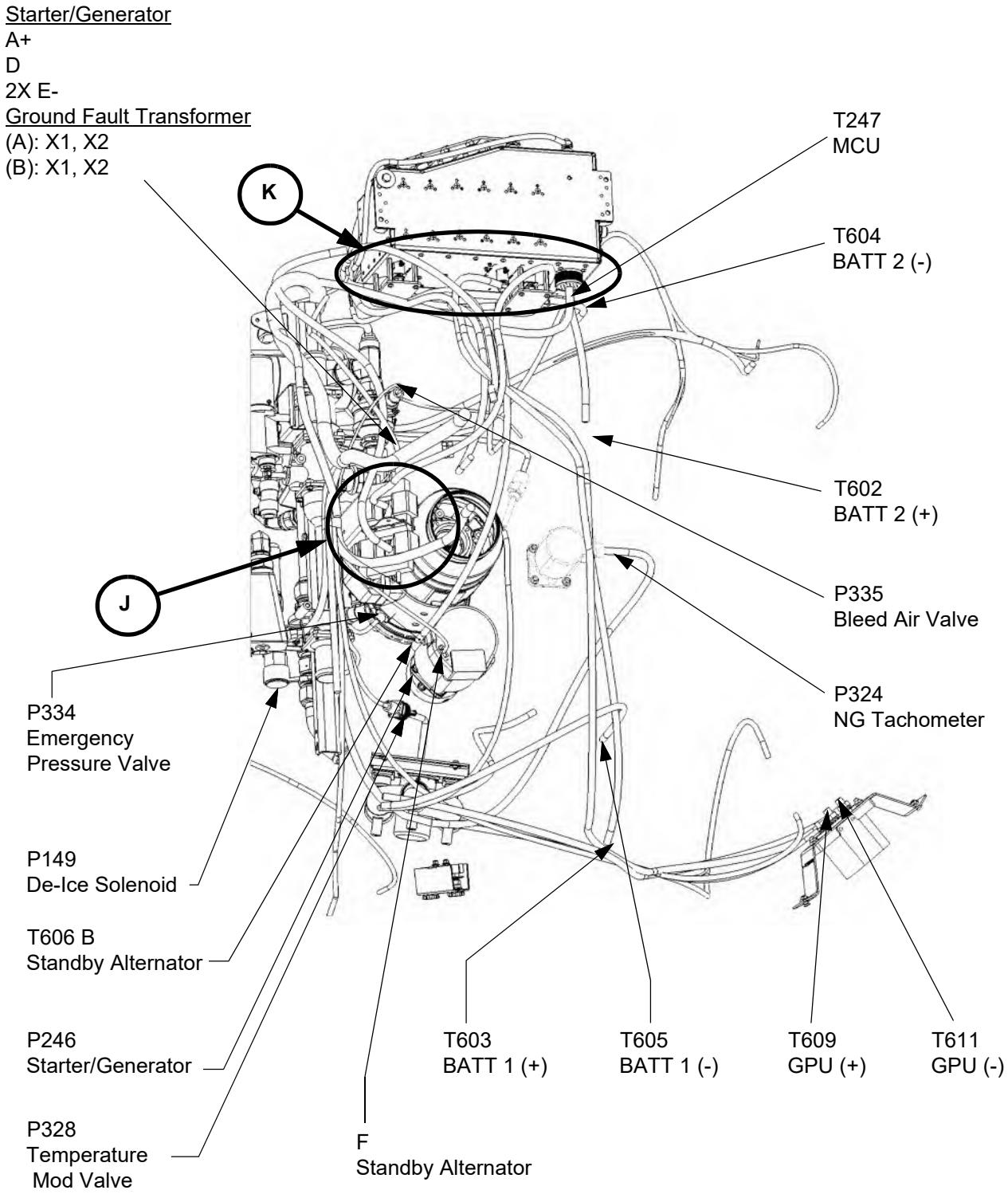

Pilot Side Aft View

Figure 71-50.1: Engine Electrical Wiring Harnesses (Sheet 6 of 17)

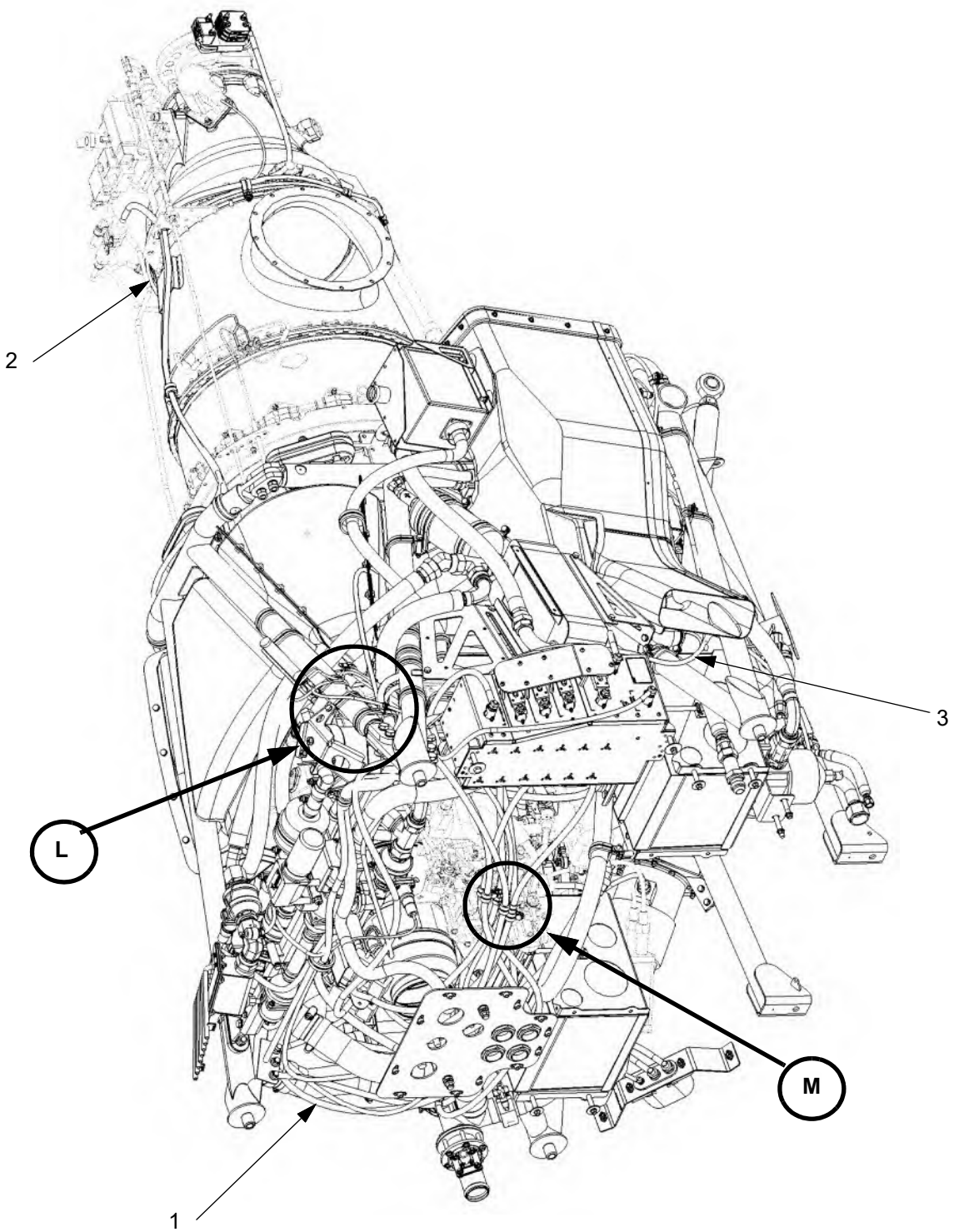

Copilot Side Aft View

Figure 71-50.1: Engine Electrical Wiring Harnesses (Sheet 7 of 17)

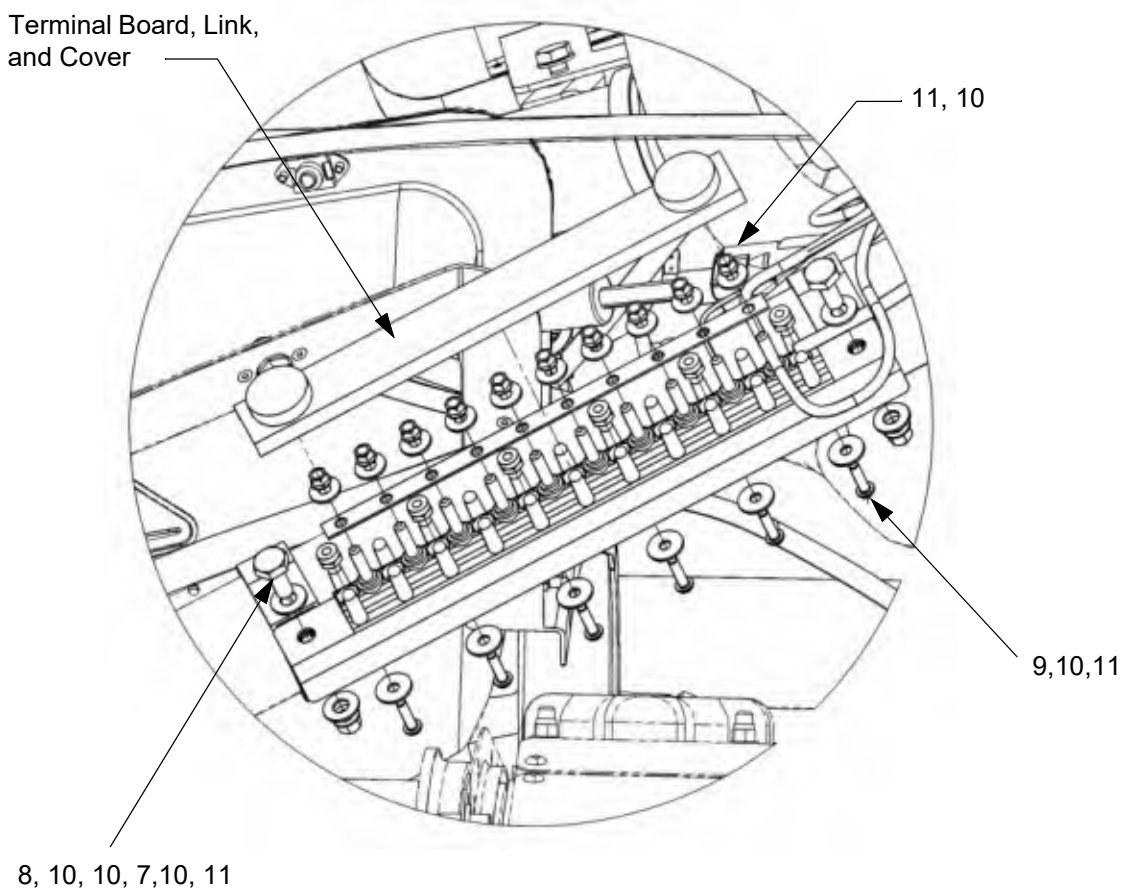

LEGEND

1. Wiring Harness, Engine Main Power and Ground
2. Wiring Harness, MCU Engine Instruments
3. Wiring Harness, Engine Controls and Accessories
4. Ground Fault Transformer
5. Terminal Block
6. Bracket
7. Clamp
8. Bolt
9. Screw
10. Washer
11. Locknut
12. Spacer

Figure 71-50.1: Engine Electrical Wiring Harnesses (Sheet 8 of 17)

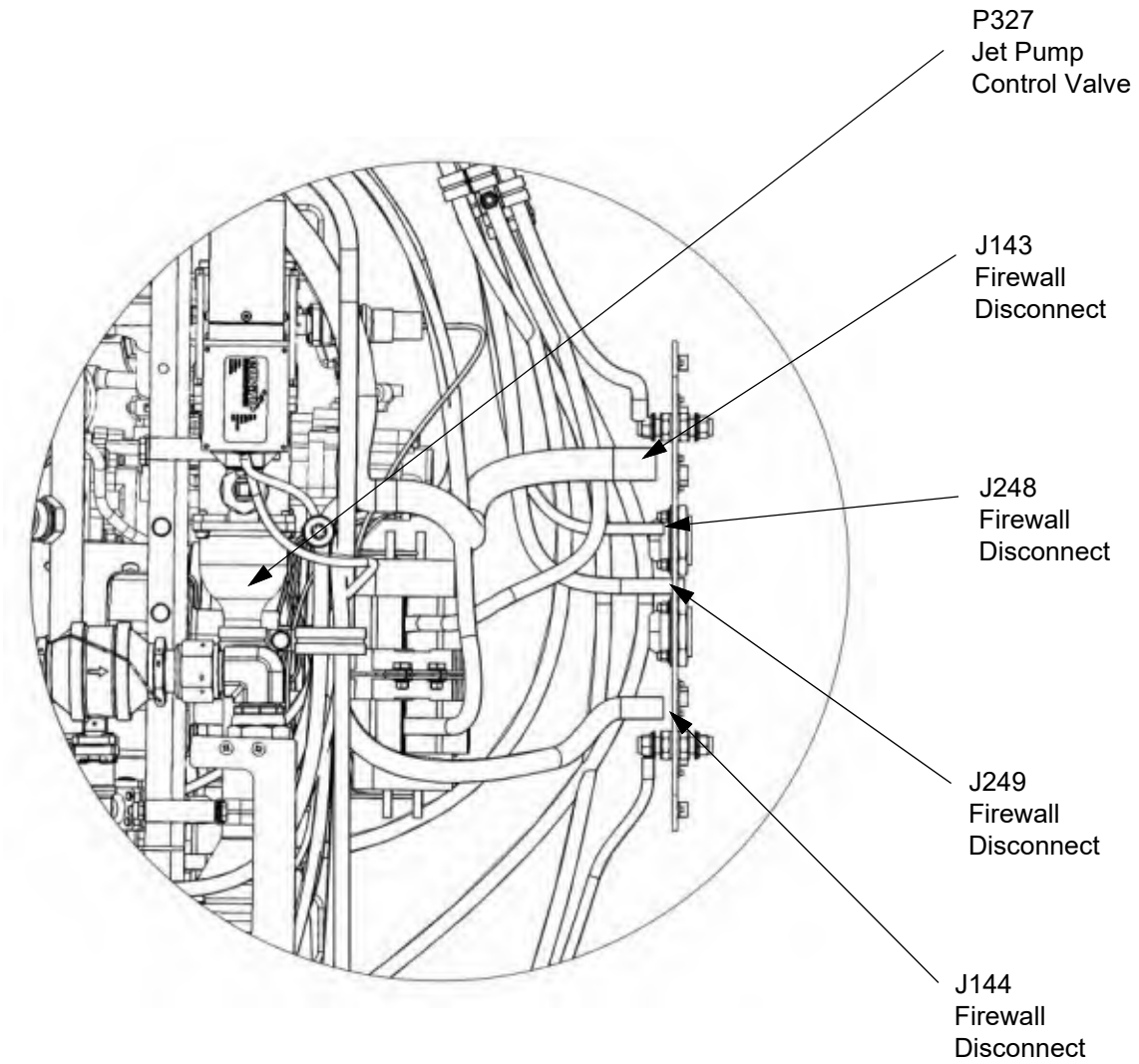

Figure 71-50.1: Engine Electrical Wiring Harnesses (Sheet 9 of 17)

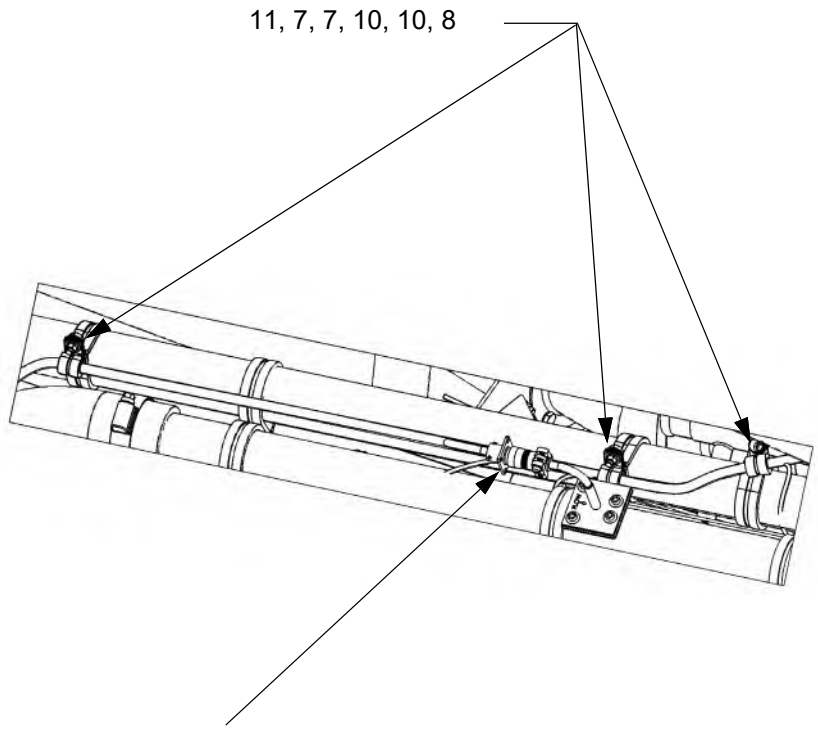

LEGEND

1. Wiring Harness, Engine Main Power
2. Wiring Harness, MCU Engine Instruments
3. Wiring Harness, Engine Power/Ground
4. Ground Fault Transformer
5. Terminal Block
6. Bracket
7. Clamp
8. Bolt
9. Screw
10. Washer
11. Locknut
12. Spacer

Figure 71-50.1: Engine Electrical Wiring Harnesses (Sheet 10 of 17)

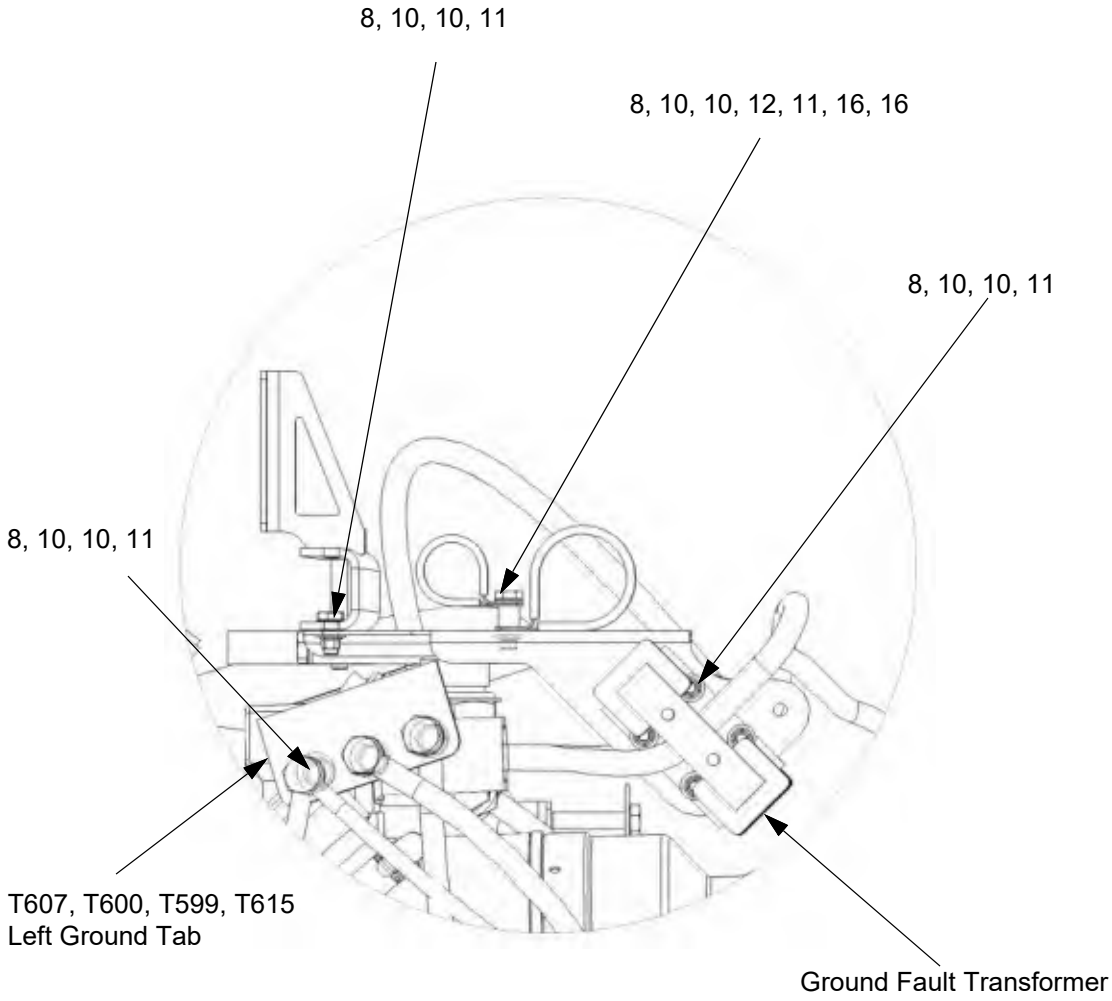



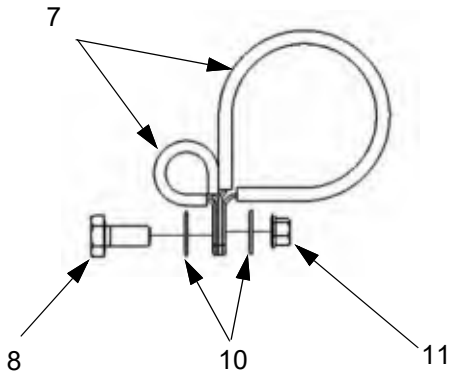

Clamp Detail, Typ.

LEGEND

1. Wiring Harness, Engine Main Power
2. Wiring Harness, MCU Engine Instruments
3. Wiring Harness, Engine Power/Ground
4. Ground Fault Transformer
5. Terminal Block
6. Bracket
7. Clamp
8. Bolt
9. Screw
10. Washer
11. Locknut
12. Spacer

Figure 71-50.1: Engine Electrical Wiring Harnesses (Sheet 11 of 17)

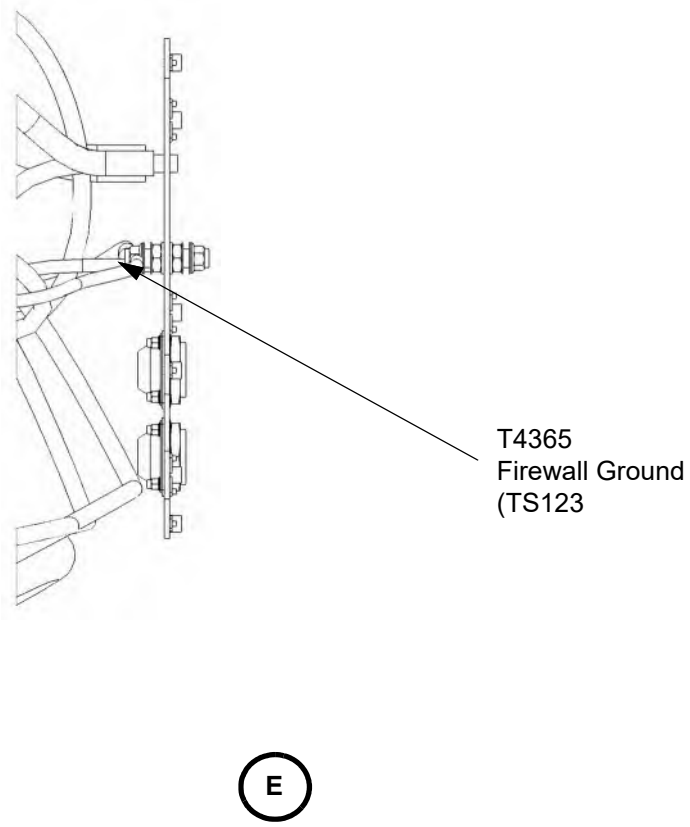

Figure 71-50.1: Engine Electrical Wiring Harnesses (Sheet 12 of 17)

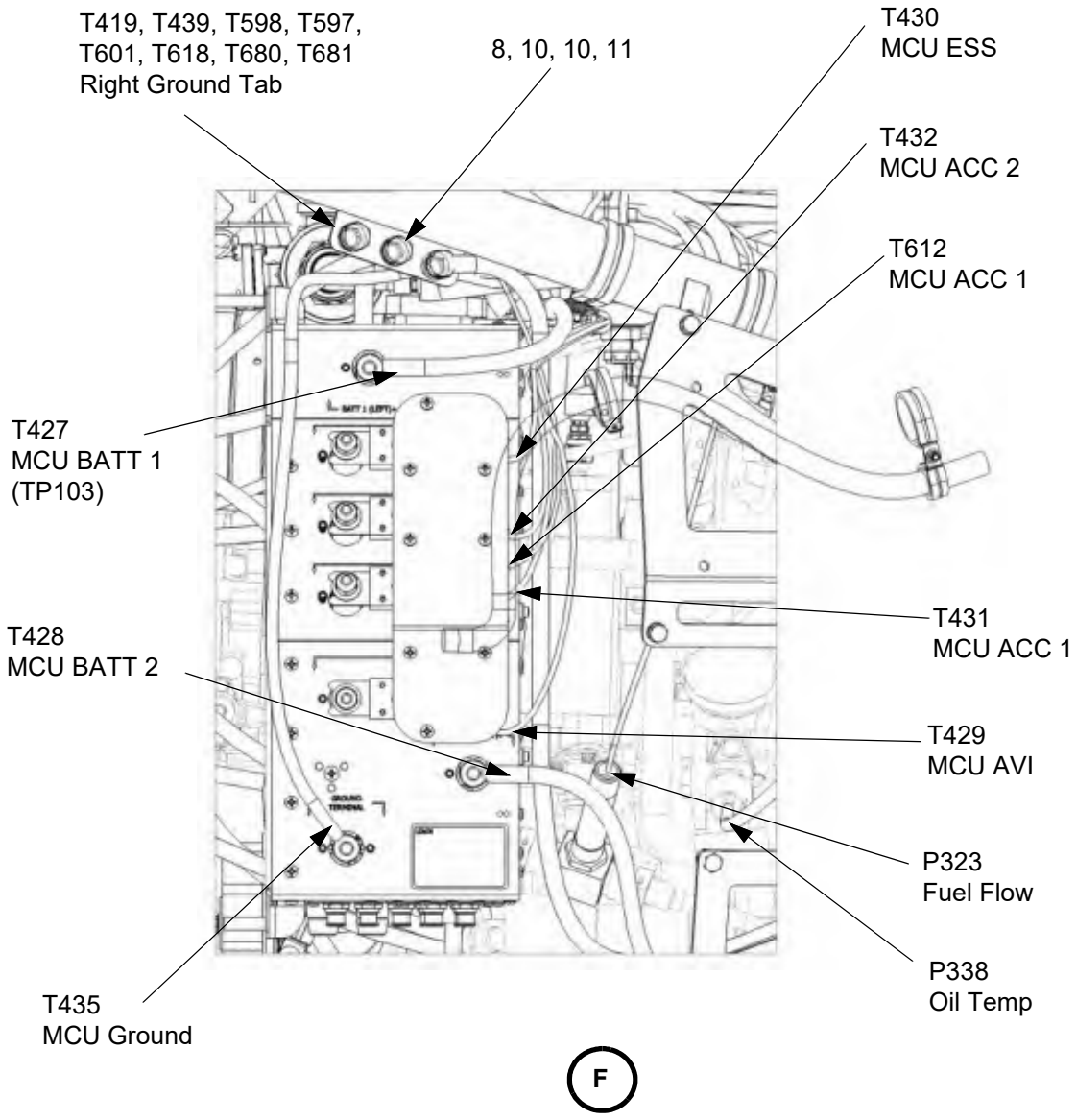

LEGEND

1. Wiring Harness, Engine Main Power
2. Wiring Harness, MCU Engine Instruments
3. Wiring Harness, Engine Power/Ground
4. Ground Fault Transformer
5. Terminal Block
6. Bracket
7. Clamp
8. Bolt
9. Screw
10. Washer
11. Locknut
12. Spacer

Figure 71-50.1: Engine Electrical Wiring Harnesses (Sheet 13 of 17)

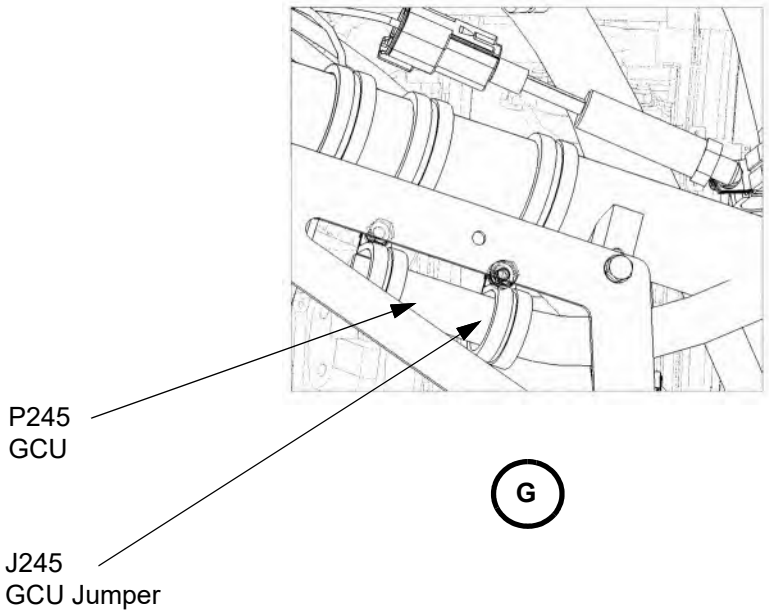

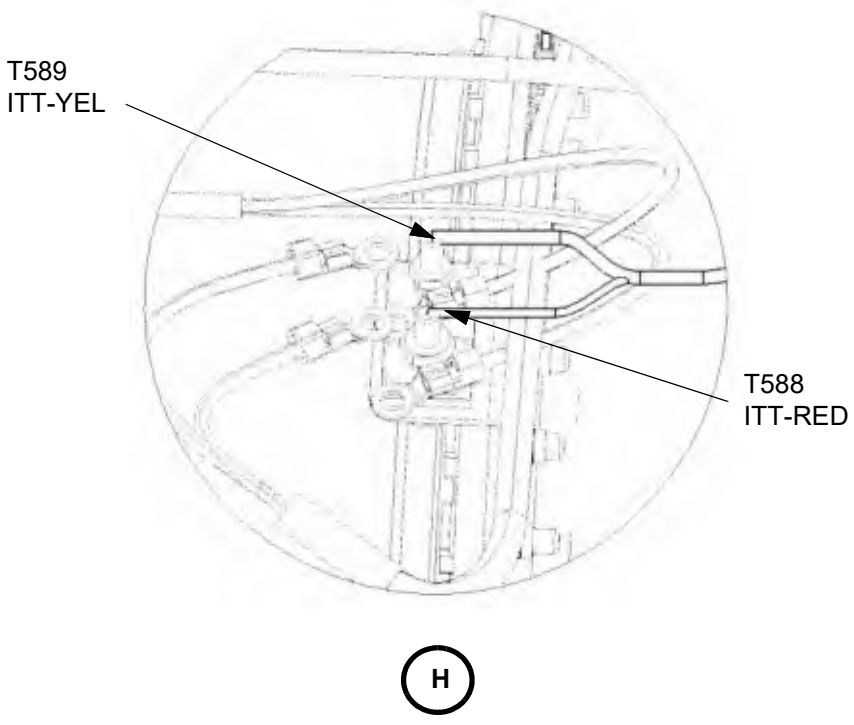

Figure 71-50.1: Engine Electrical Wiring Harnesses (Sheet 14 of 17)

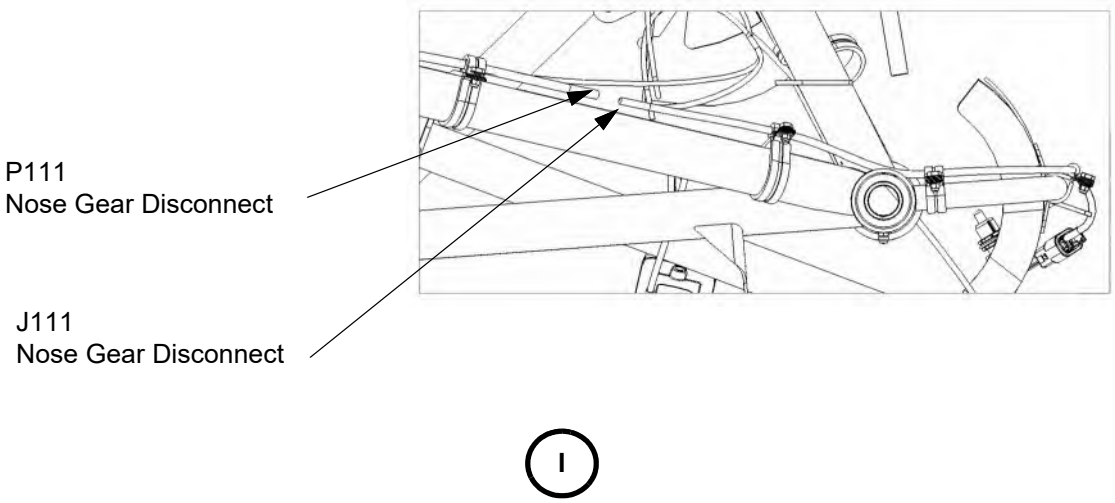

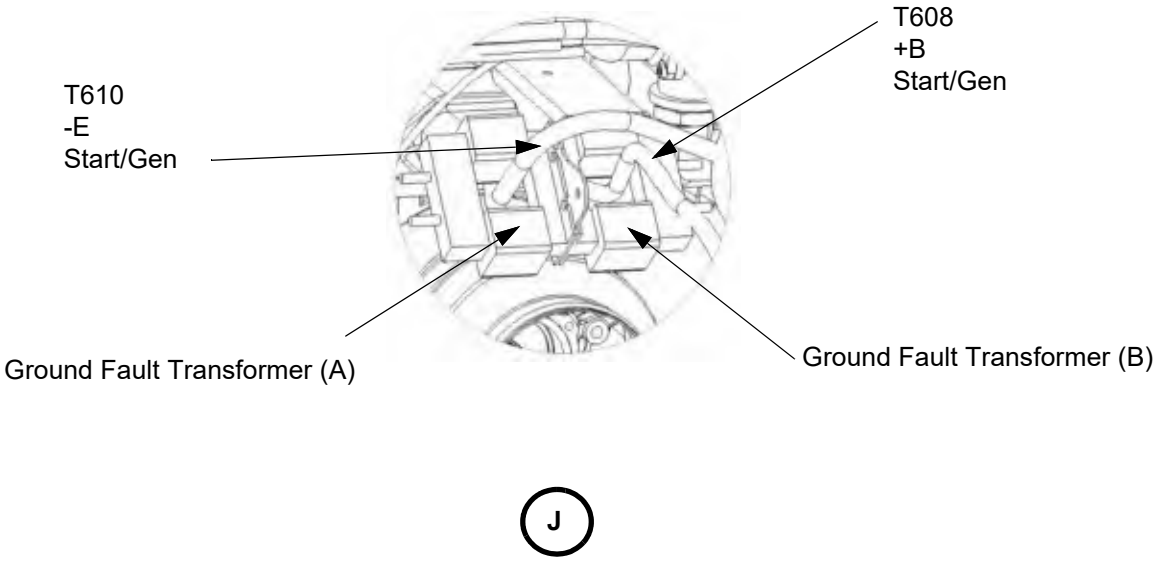

Figure 71-50.1: Engine Electrical Wiring Harnesses (Sheet 15 of 17)

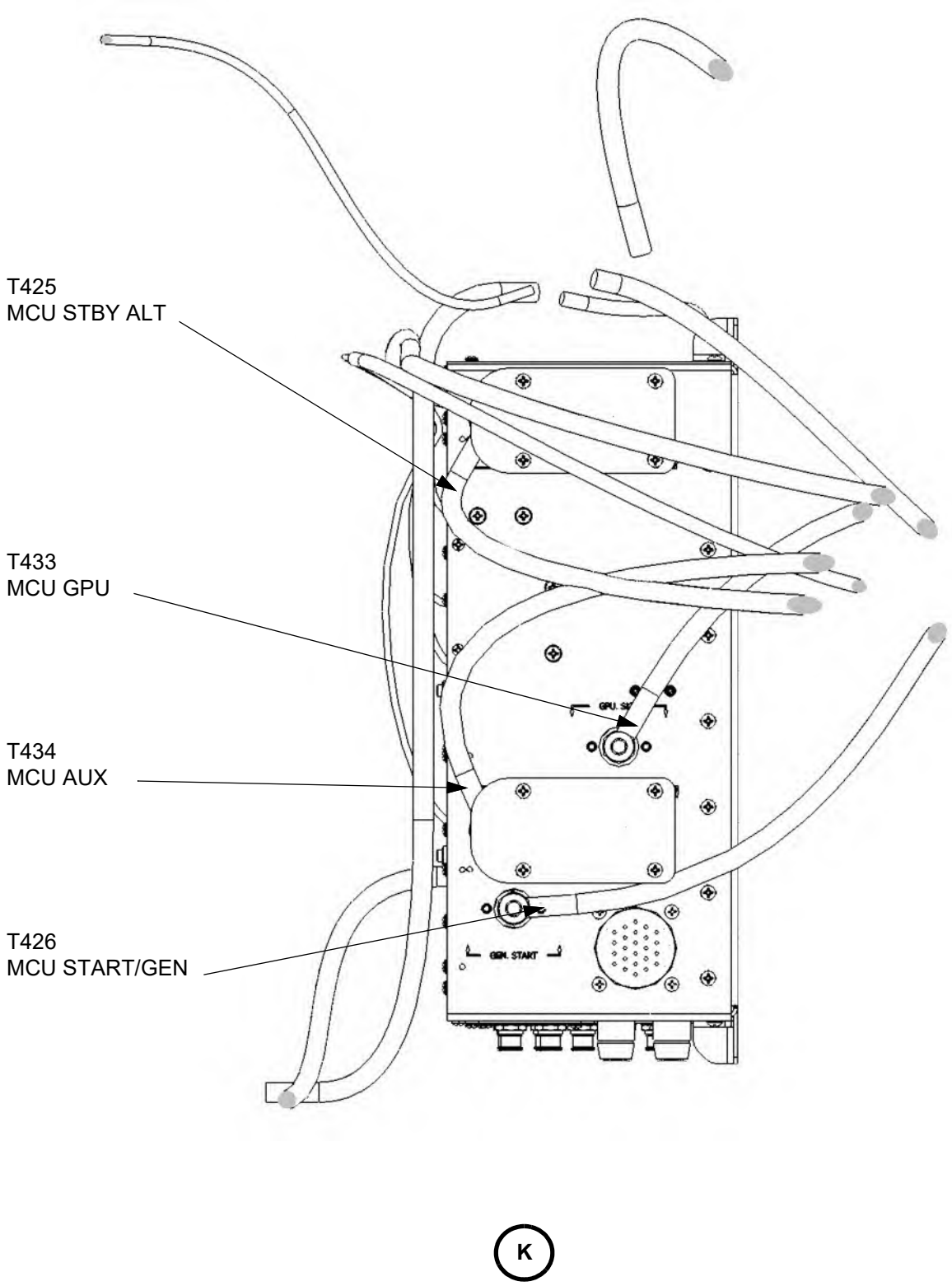

Figure 71-50.1: Engine Electrical Wiring Harnesses (Sheet 16 of 17)

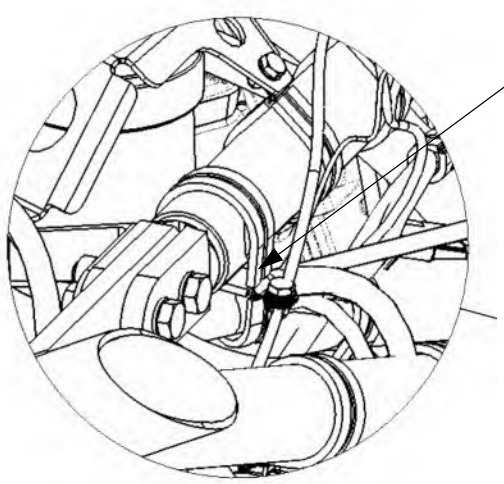

L

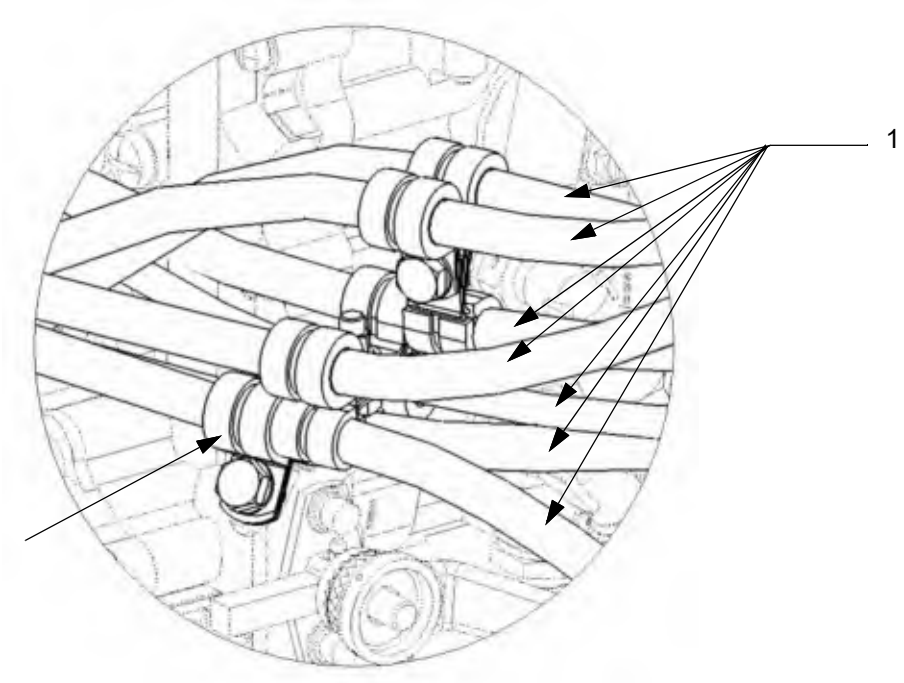

M

Figure 71-50.1: Engine Electrical Wiring Harnesses (Sheet 17 of 17)

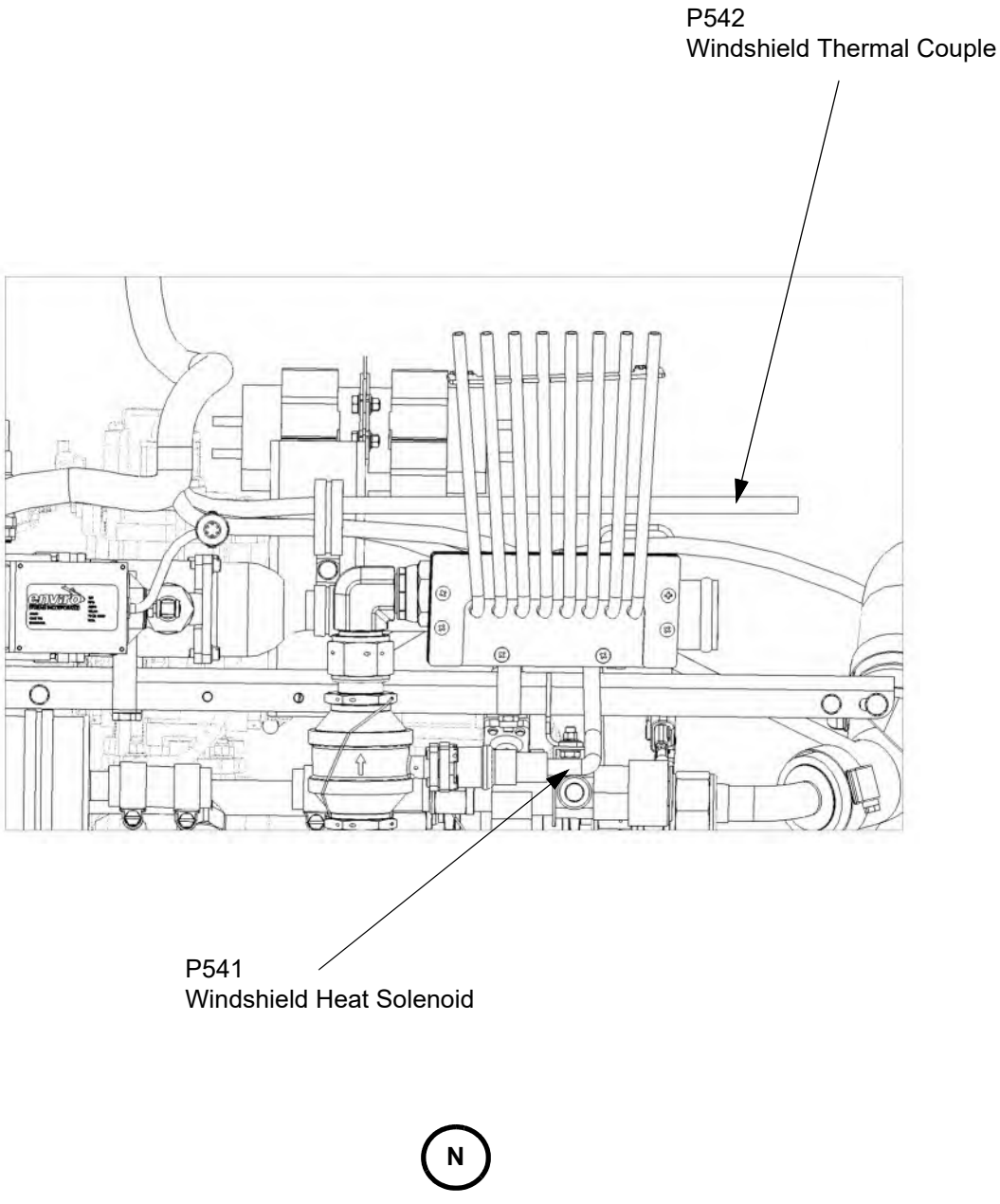

B. Lightning Protection Grounding

(1) Removal

(a) Set the BATT 1 and BATT 2 switches to OFF.

(b) Disconnect external electrical power from the airplane (refer to Chapter 24-40).

(c) Remove the cowling (refer to Chapter 71-10).

(d) Remove the screws or bolts, washers, and locknuts attaching the grounding strap to the engine mount.

(e) Remove the grounding strap.

(2) Installation

(a) Attach the grounding strap to the engine mount using screws, bolts, washers, and locknuts, as applicable

(b) Install the cowling (refer to Chapter 71-10).

Grounding Straps

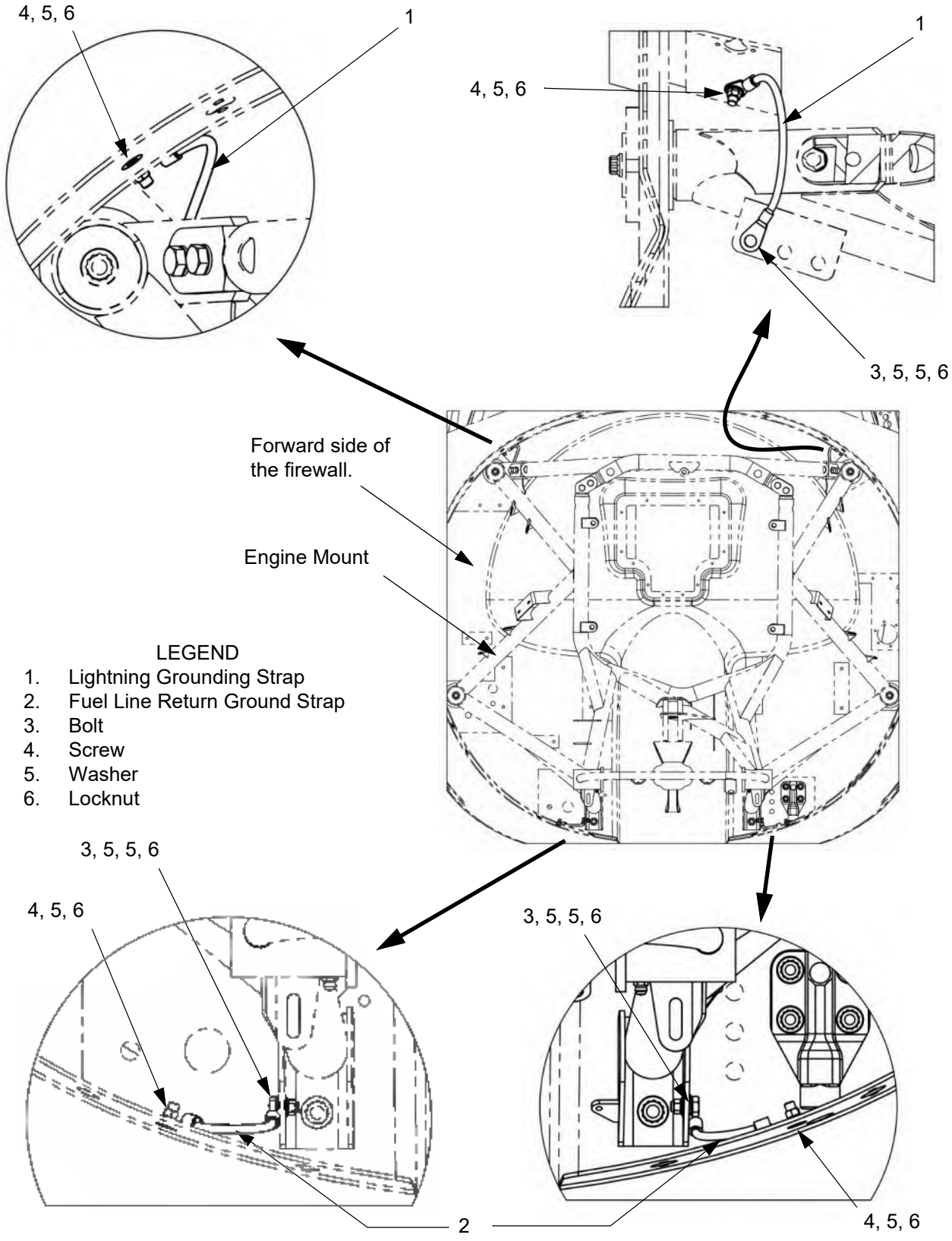

This Page Intentionally Left Blank

ENGINE AIR INTAKES

1. Description

This chapter gives information and procedures for the engine air intakes.

A single opening on the forward underside of the cowling directs intake air into a symmetrical duct to each side of the engine. Each of these ducts is connected to an inertial separator for removal of ice and particulates from the air before it enters a plenum around the engine.

2. Maintenance Practices

A. Inertial Separator

Removal and installation procedures for the left and right inertial separators are similar.

CAUTION: Caution: Damage to the intake will occur if a non-braked actuator (PN: AK71694000) is installed on an aircraft without the stop spring assembly installed. Verify the configuration before ordering or installing a new actuator.

(1) Removal

(a) Set the BATT 1 and BATT 2 switches to OFF.

(b) Disconnect external electrical power from the airplane (refer to Chapter 24-40).

(c) Remove the cowling (refer to Chapter 71-10).

(d) Disconnect the wiring harness from the inertial separator.

(e) Remove the tie rods, bellcrank, stop spring assembly, and any other hardware as required for removal of the inertial separator from the airplane.

(f) Remove the ten bolts attaching the inertial separator to the plenum.

(g) Carefully cut the sealant bonding the inertial separator to the plenum.

WARNING: Take care not to damage the inertial separator or plenum. Use of a plastic razor, plastic scraper, or wooden knife is recommended.

(h) Carefully pull the inertial separator away and down far enough for the shedder vane to clear the plenum.

(i) Remove the inertial separator from the airplane.

(2) Installation

(a) Remove all of the sealant from the contact surfaces between the inertial separator and the plenum.

WARNING: Do not use metallic scrapers that could damage the inertial separator or the plenum. Plastic scrapers are recommended.

(b) Clean the bonding surfaces using isopropyl alcohol.

(c) Adjust vane no. 2.

CAUTION: All adjustments must be done using 14 vDC when the actuator has no opposing load applied. Do not adjust the rod end of the actuator. Running a non-loaded actuator using higher than 14 vDC will cause internal damage to the actuator.

(i) The tooled face of the vane no. 2 door must be against the mating face of the shedder vane when the actuator is in the fully extended position.

(ii) The vane no. 2 door must compress the gasket seal all around the mating molded bead of the vane no. 2 housing when the actuator is in the fully retracted position.

(iii) If the vane no. 2 door does not compress the gasket seal all around mating molded bead of the vane no. 2 housing, loosen the jam nut on the actuator and adjust the rod end until the vane no. 2 door compresses the gasket seal. Make sure threads are visible in the sight hole. Torque jam nut 50-70 inch pounds.

Note: After final adjustment is made, if full gasket compression cannot be achieved, fill any gaps between vane no. 2 door and mating molded bead in the inertial separator with CS 3204 B-1/2 or AC350 B-1/2 sealant. Apply the sealant to the molded bead of the vane no. 2 housing, not the vane no. 2 seal.

(d) Adjust vane no. 1

CAUTION: All adjustments must be done using 14 vDC when the actuator has no opposing load applied. Running a non-loaded actuator using higher than 14 vDC will cause internal damage to the actuator.

(i) The tooled face of the vane no. 1 door must be 4.4” ± 0.05” from the tooled surface of the outboard side of the inertial separator when the actuator is in the fully extended position.

(e) (Pre-SN K011, and pre-SB0006 Rev A aircraft only.) Adjust the actuator stop spring preload after the vane door in the inertial separator has been fully adjusted to meet the following requirements:

CAUTION: All adjustments must be done using 14 vDC when the actuator has no opposing load applied. Running a non-loaded actuator using higher than 14 vDC will cause internal damage to the actuator.

(i) The welded washer on the pressure rod assembly must compress the stop spring 0.063" when the actuator is in the fully extended position. The 0.063" measurement is taken between the inside face of the stop spring housing and the mating face of the pressure bushing.

(ii) The self-locking nut on the threaded end of the pressure rod assembly must compress the stop spring 0.063" when the actuator is in the fully retracted position. The 0.063" measurement is taken between the inside face of the stop spring housing and the mating face of the pressure bushing.

(f) Apply PPG Aerospace PR-1995, high temperature RTV, or Permatex 81409 high temperature silicone to the bonding surface on the inertial separator.

(g) Carefully put the bonding surface of the inertial separator against the bonding surface of the plenum.

(h) Attach the inertial separator to the plenum using ten bolts.

(i) Let the PPG Aerospace PR-1995 cure for two hours before final fastener torque.

(i) If using high temperature RTV, allow to cure for one hour before final fastener torque.

(j) Install the stop spring assembly, bellcrank, tie rods, and any other hardware removed during removal of the inertial separator.

(k) Connect the wiring harness and case ground to the inertial separator.

(l) Do the Operational Check.

(m) Install the cowling (refer to Chapter 71-10).

(3) Inspection and Adjustment

(a) Remove the cowling (refer to Chapter 71-10).

(b) Inspect the linear actuator for condition and operation.

(c) Inspect the attachment hardware, hinges, bearings, bellcranks, and tie rods for condition and security of attachment.

(d) Inspect the composite material body and vanes of the inertial separator for signs of damage or delamination.

(e) Verify operation of the inertial separator. If adjustment is required remove the inertial separator from the airplane. Adjust the vanes and stop spring as required following the requirements listed above in steps 2.A (2) (i), 2.A (2) (j), and 2.A (2) (k). If adjustment is not required proceed to step (g) below.

(f) Install the inertial separator.

(g) Do the operational check of the inertial separator (refer to Chapter 24-00).

(h) Install the cowling (refer to Chapter 71-10).

(4) Operational Check

(a) Connect external electrical power to the airplane (refer to Chapter 24-40).

(b) Set the BATT 1 and BATT 2 switches to ON.

(c) Make sure the INERT SEP circuit breaker is in.

(d) Set the INERT SEP switch to ON.

(e) Verify that the inertial separator vanes open fully.

(f) Set the INERT SEP switch to off to retract the inertial separator vanes, pull the INERT SEP circuit breaker to stop the vanes mid-travel.

(g) Verify that the INERT SEP FAIL CAS message is displayed approximately 30 seconds after pushing the INERT SEP switch.

(h) Reset the INERT SEP circuit breaker and complete the retraction of the inertial separator vanes. Verify that the CAS message extinguishes.

(i) Set the INERT SEP switch to ON again, pull the INERT SEP circuit breaker to stop the vanes mid-travel.

(j) Verify that the INERT SEP FAIL CAS message is displayed approximately 30 seconds after pushing the INERT SEP switch.

(k) Reset the INERT SEP circuit breaker and complete the extension of the inertial separator vanes. Verify that the CAS message extinguishes.

(l) Set the INERT SEP switch to off to retract the inertial separator vanes.

B. Plenum

(1) Removal

(a) Set the BATT 1 and BATT 2 switches to OFF.

(b) Disconnect external electrical power from the airplane (refer to Chapter 24-40).

(c) Remove the cowling (refer to Chapter 71-10).

(d) Remove the inertial separators.

(e) Remove the upper engine mount (refer to Chapter 71-20).

(f) Remove the bolts and washers attaching the plenum pieces to their adjacent plenum pieces.

(g) Carefully cut the PPG Aerospace PR-1995 fire sealant or high temperature RTV bonding the plenum pieces to their adjacent plenum pieces.

WARNING: Take care not to damage the inertial separator or plenum. Use of a plastic razor, plastic scraper, or wooden knife is recommended.

(h) Remove the plenum pieces from the airplane.

(2) Installation

(a) Remove all of the sealant from the contact surfaces of the plenum pieces.

WARNING: Do not use metallic scrapers that could damage the inertial separator or the plenum. Plastic scrapers are recommended.

(b) Clean the bonding surfaces using isopropyl alcohol.

(c) Apply PPG Aerospace PR-1995, high temperature RTV, or Permatex 81409 high temperature silicone to the bonding surfaces of the plenum pieces.

(d) Attach the pieces together around the engine using bolts and washers. Let the PPG Aerospace PR-1995 or high temperature RTV fully cure (refer to the sealant manufacturer's instructions).

(e) Install the upper engine mount (refer to Chapter 71-20).

(f) Install the inertial separators.

(g) Connect the wiring harness to the inertial separators.

(h) Do an operational check of the inertial separators.

(i) Install the cowling (refer to Chapter 71-10).

Figure 71-60.1: Inertial Separators and Plenum (Sheet 1 of 6)

LEGEND

1. Plenum, Upper Left
2. Plenum, Upper Right
3. Plenum, Middle Right
4. Plenum, Middle Left
5. Inertial Separator, Left
6. Inertial Separator, Right
7. Plenum, Bottom
8. Plenum, Upper

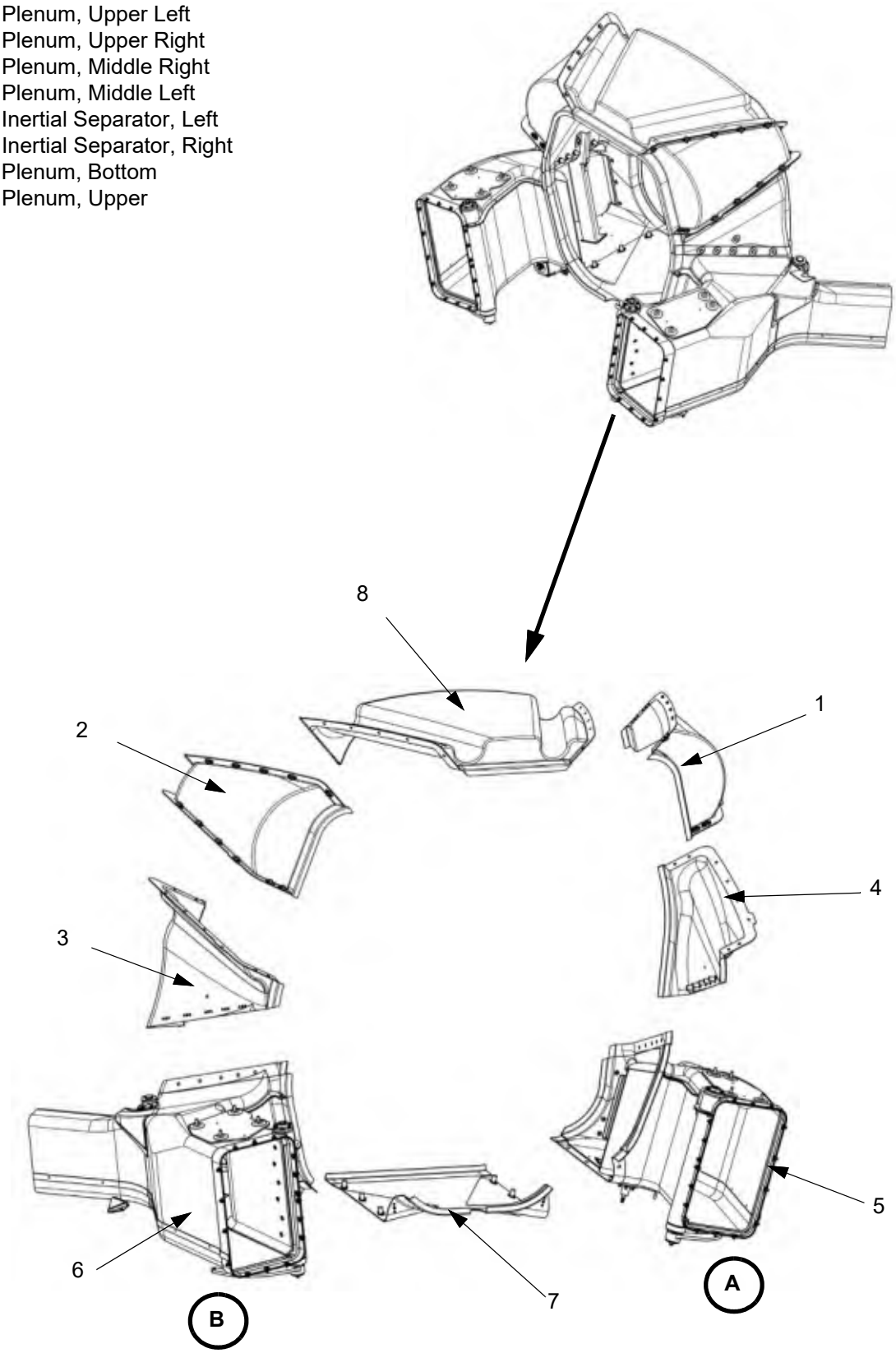

Figure 71-60.1: Inertial Separators and Plenum (Sheet 2 of 6)

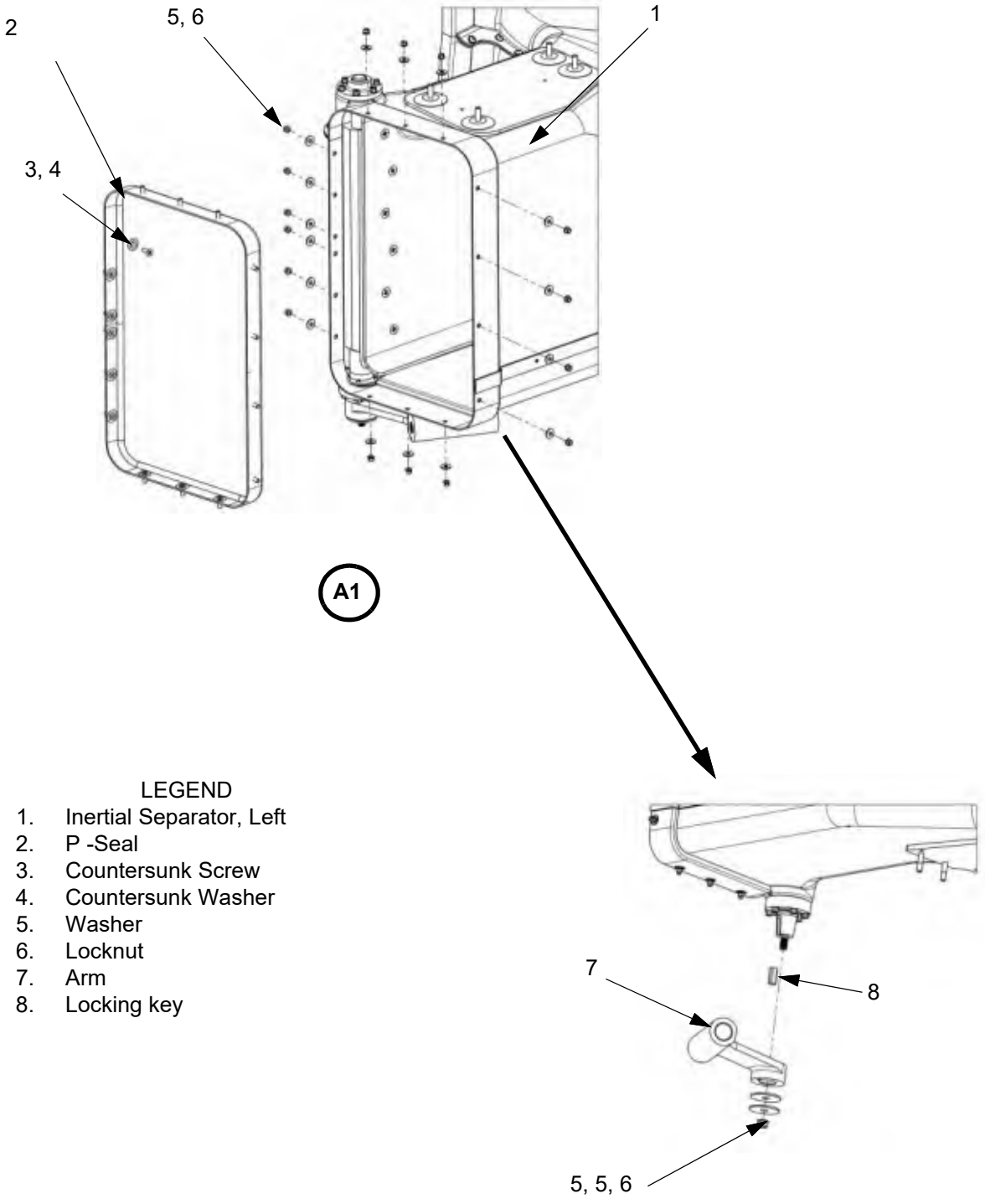

LEGEND

1. Inertial Separator, Left
2. P -Seal
3. Countersunk Screw
4. Countersunk Washer
5. Washer
6. Locknut
7. Arm
8. Locking key

Figure 71-60.1: Inertial Separators and Plenum (Sheet 3 of 6)

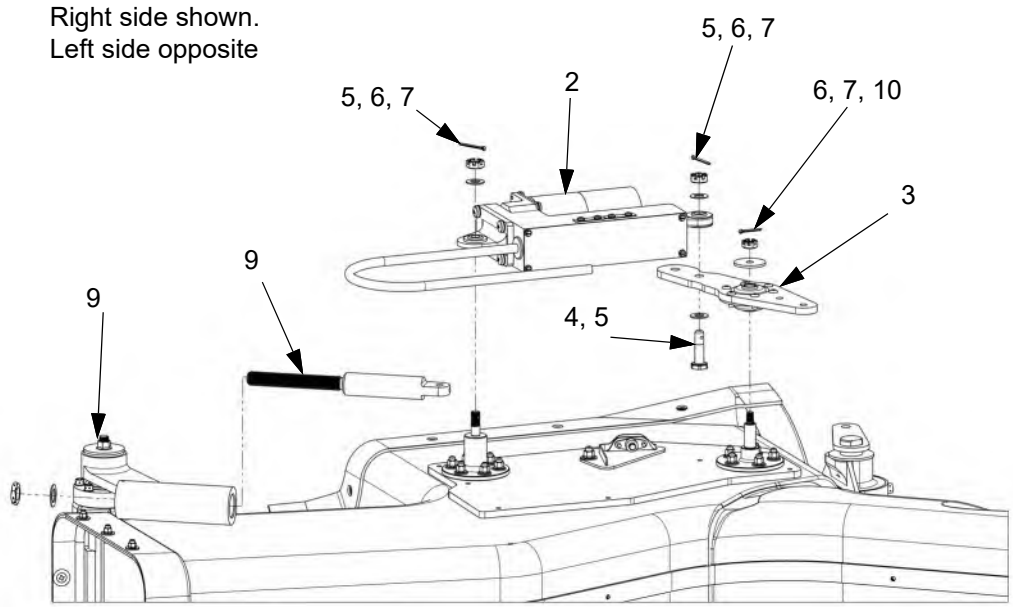

LEGEND

1. Pressure Rod*
2. Linear Actuator
3. Bellcrank
4. Bolt
5. Washer
6. Castellated Nut
7. Cotter Pin
8. Adjustment Rod
9. Arm
10. Large Area Washer
11. Adjustment Rod
12. Stop Spring Assembly*
13. Pressure Bushing*

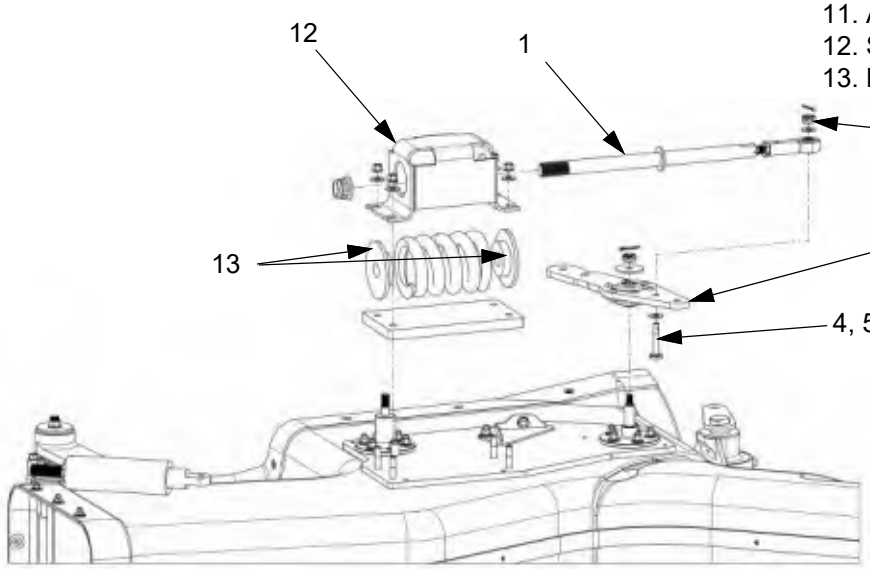

*Pre-SN K011 and pre-SB-0006 Rev. A aircraft only.

Figure 71-60.1: Inertial Separators and Plenum (Sheet 4 of 6)

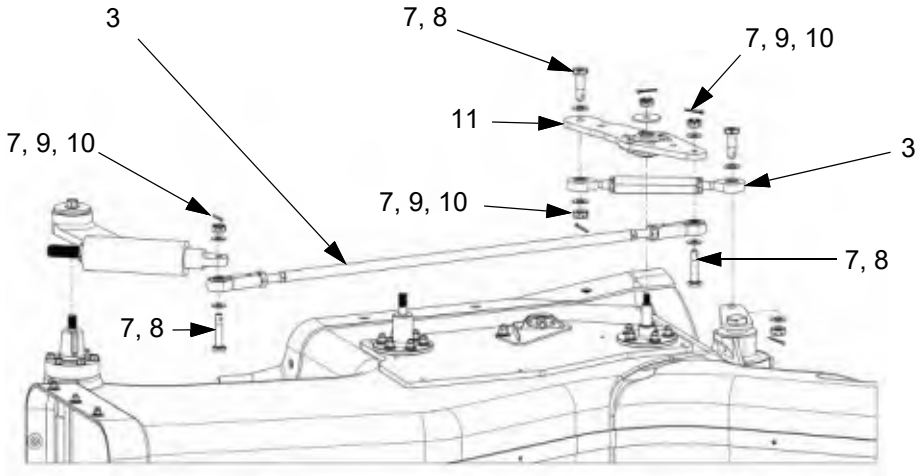

Right side shown.
Left side opposite

A5

LEGEND
1. Inertial Separator, Right
2. Vane 1 Assembly
3. Tie Rod
4. Bushing
5. Bushing, Flanged
6. Screw, Socket Head, Drilled
7. Washer
8. Bolt
9. Castellated Nut
10. Cotter Pin
11. Bellcrank
12. Bolt
13. Washer

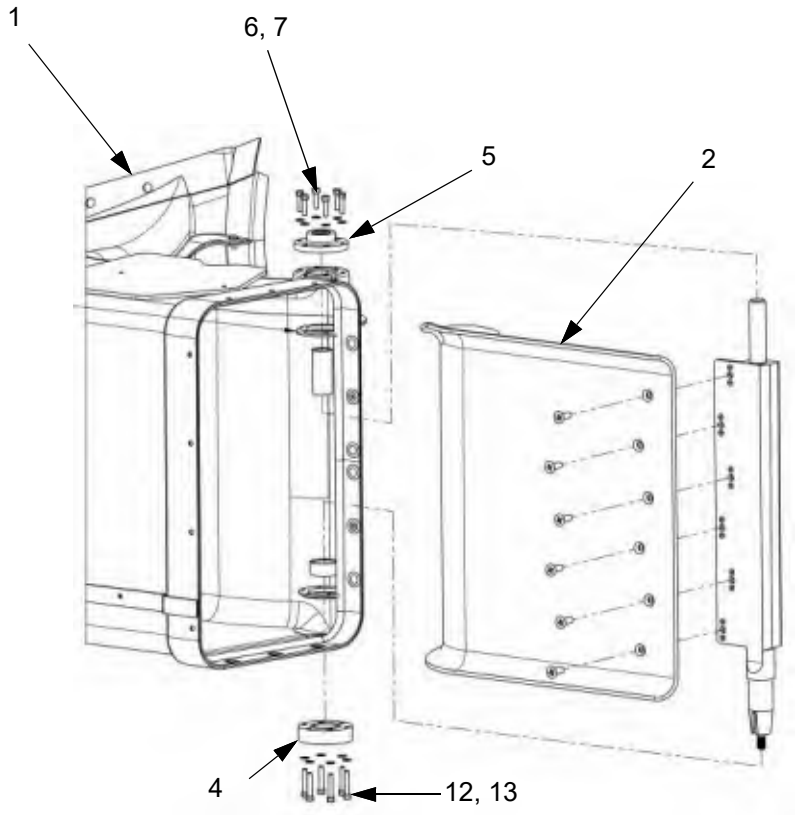

B1

Figure 71-60.1: Inertial Separators and Plenum (Sheet 5 of 6)

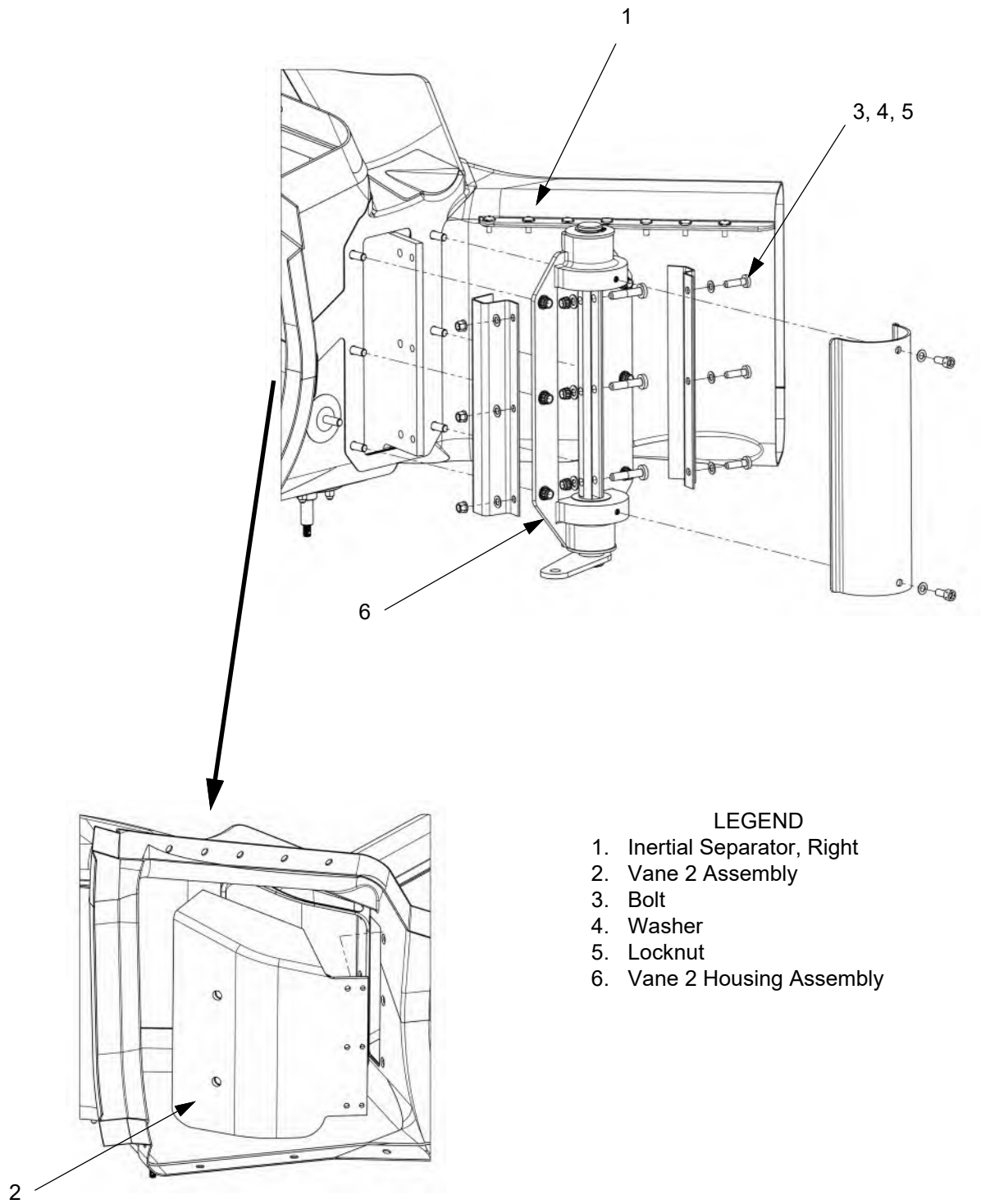

LEGEND

1. Inertial Separator, Right
2. Vane 2 Assembly
3. Bolt
4. Washer
5. Locknut
6. Vane 2 Housing Assembly

Figure 71-60.1: Inertial Separators and Plenum (Sheet 6 of 6)

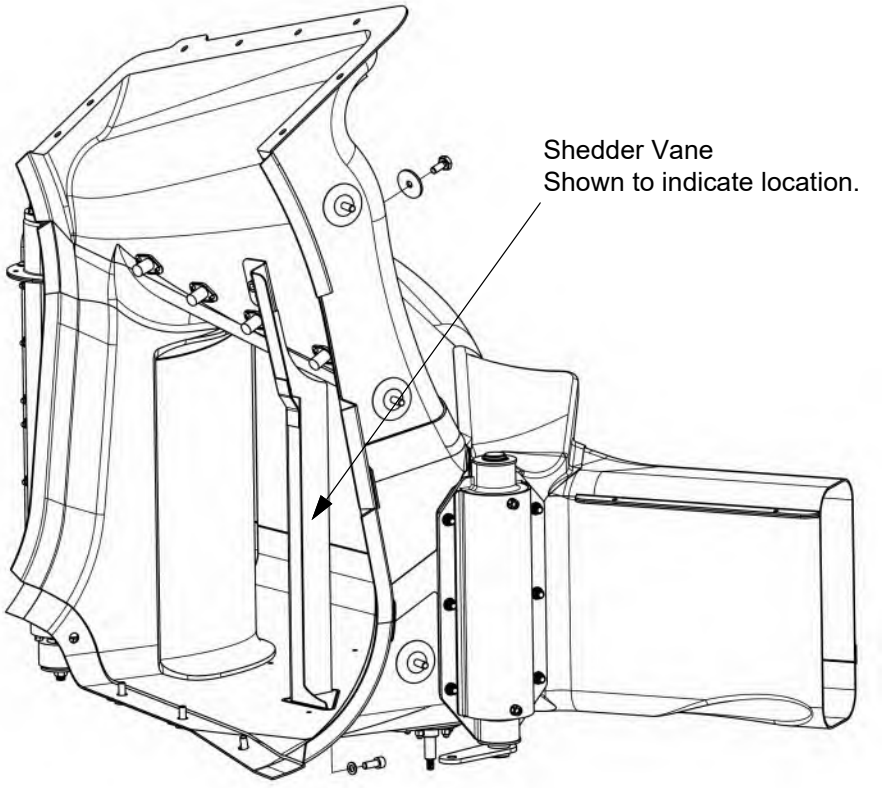

Right side shown.
Left side opposite

This Page Intentionally Left Blank

ENGINE DRAINS

1. Description

This chapter gives information and procedures for the engine drains.

2. Maintenance Practices

A. Engine Drains

(1) Removal

(a) Remove the cowling (refer to Chapter 71-10).

(b) Disconnect the hose or tubing from the applicable engine drain and the engine drains manifold.

(c) Remove any clamps attaching the hose or tubing to the engine or the engine mount, as necessary.

(d) Remove the hose or tubing.

(2) Installation

Note: Seal all pipe threads using Loctite™ 567 or anti-seize PTFE tape conforming to A-A-58092-2-2.

Note: Ensure that inner lining of Sceet tubing is fully seated (not rolled back) on all fittings prior to installation of hose clamps. Acceptable to use A-A-59163 (silicone tape) to secure inner lining to outer layer of tubing. Optional installation process: trim the outer layer as required, fold the inner layer back over the outer layer, and wrap silicone tape over the folded seam. Ensure the tape covers the trimmed fiberglass strand and bent metal wire.

(a) Connect the hose or tubing to the engine drains manifold and the applicable engine drain.

(b) Attach the hose to the engine and the engine mount using clamps.

(c) Install the cowling (refer to Chapter 71-10).

(3) Inspection

(a) Inspect for security of attachment of the engine drains manifold.

(b) Inspect for security and leaks at the fittings, hoses, and tubing.

(c) Inspect for security and condition of the hoses and tubing.

Figure 71-70.1: Engine Drains (Sheet 1 of 5)

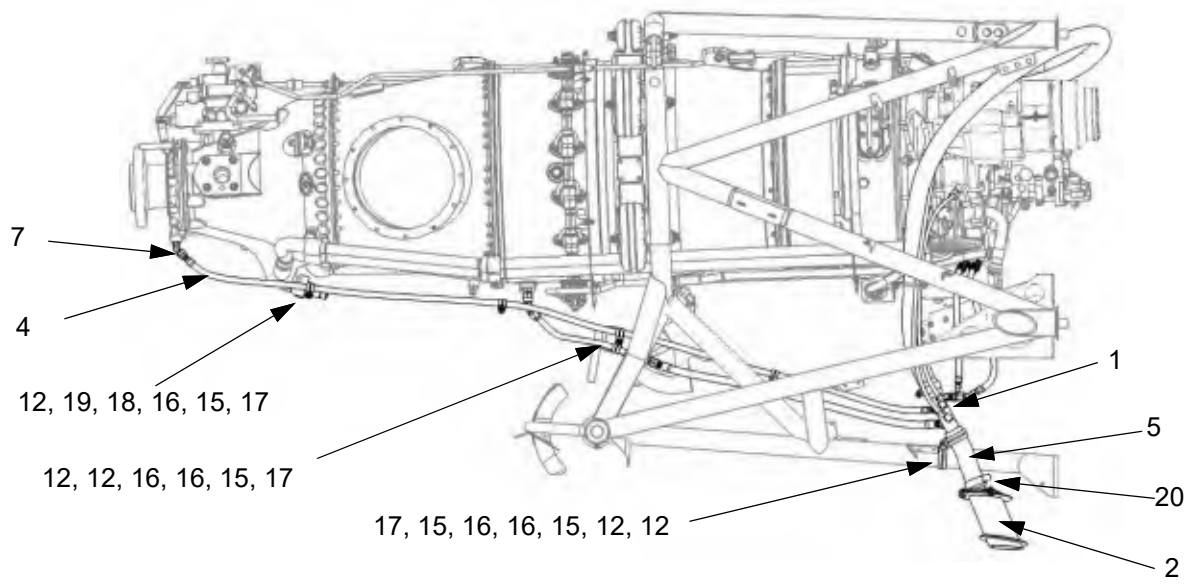

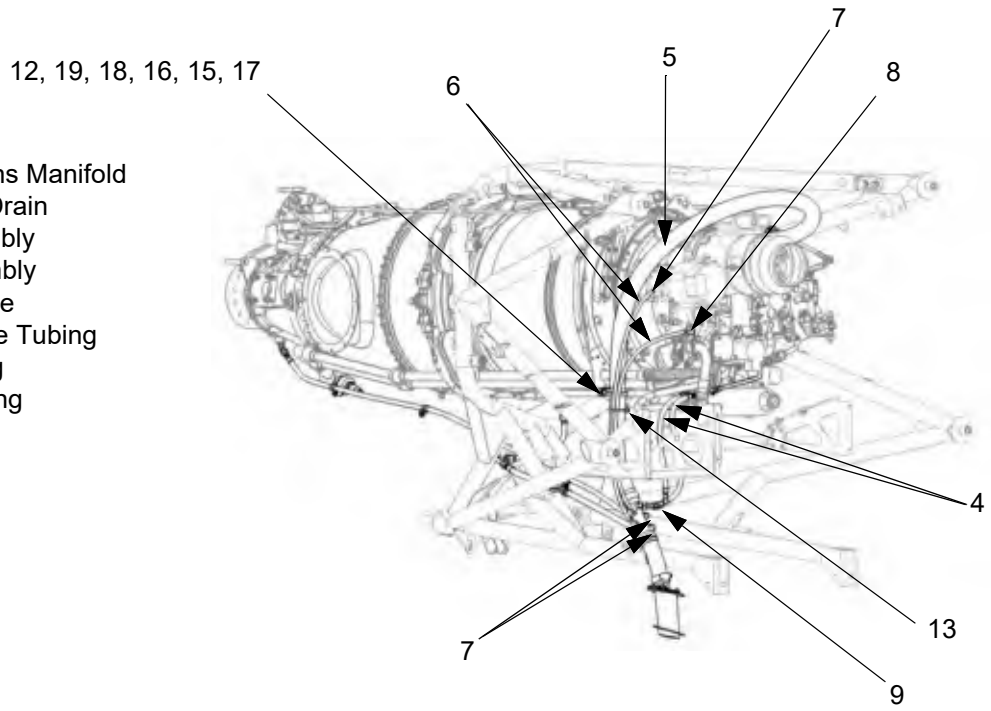

LEGEND

1. Engine Drains Manifold
2. Overboard Drain
3. Tube Assembly
4. Hose Assembly
5. Silicone Hose
6. Polyurethane Tubing
7. Elbow Fitting
8. Straight Fitting
9. Tee Fitting
10. Union
11. Reducer
12. Clamp
13. Strap
14. Screw
15. Bolt
16. Washer
17. Locknut
18. Spacer
19. Bracket
20. Hose Clamp

Figure 71-70.1: Engine Drains (Sheet 2 of 5)

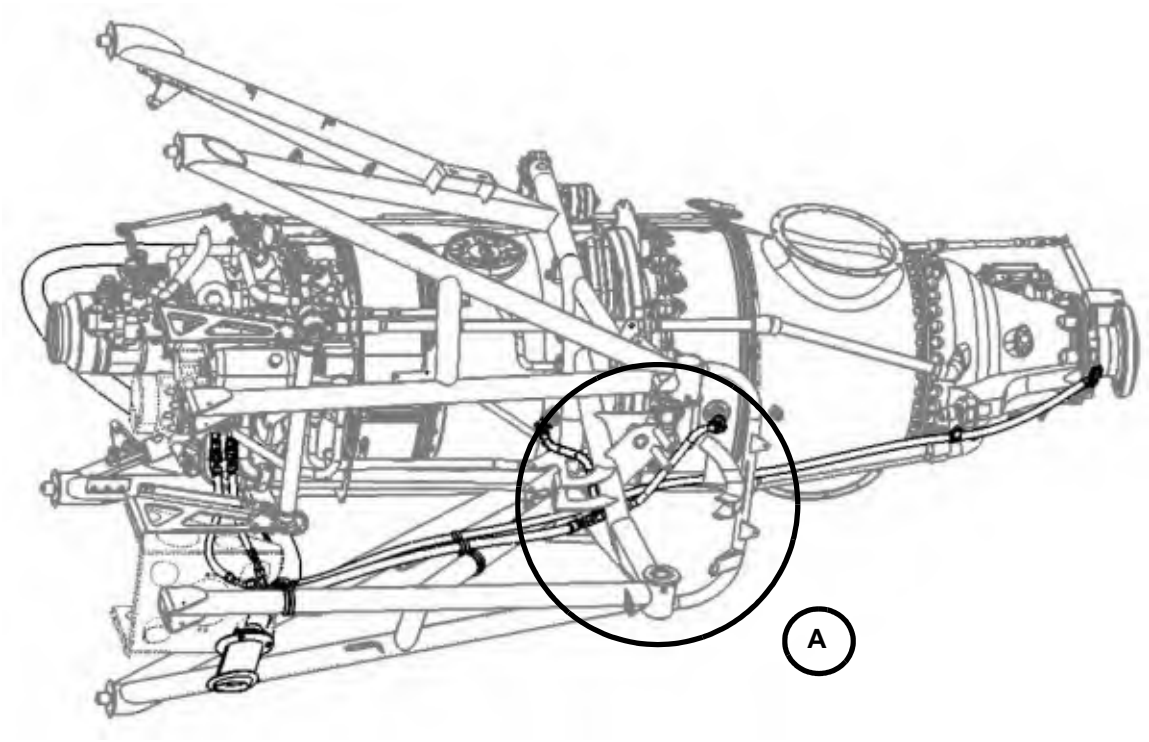

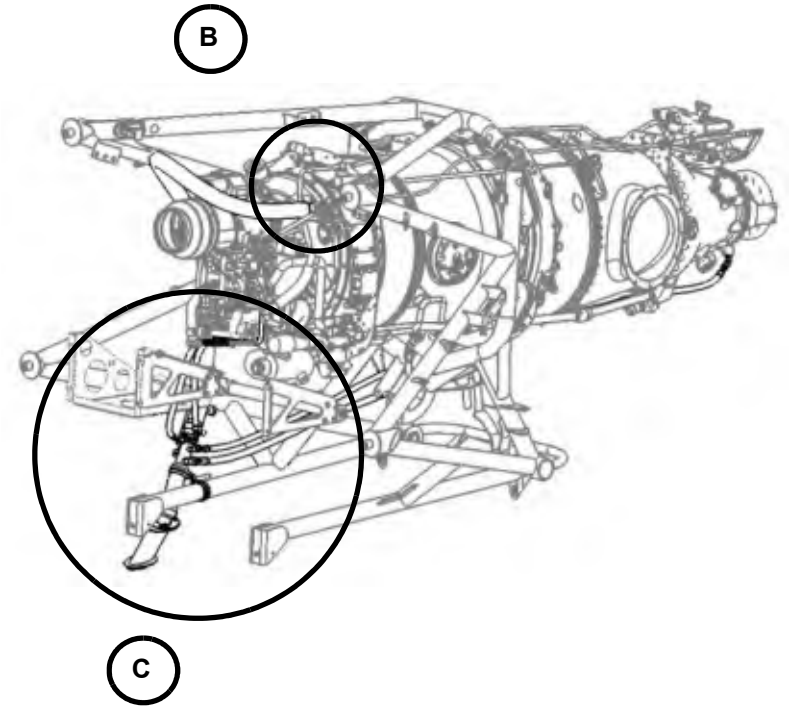

LEGEND

1. Engine Drains Manifold
2. Overboard Drain
3. Tube Assembly
4. Hose Assembly
5. Silicone Hose
6. Polyurethane Tubing
7. Elbow Fitting
8. Straight Fitting
9. Tee Fitting
10. Union
11. Reducer
12. Clamp
13. Strap
14. Screw
15. Bolt
16. Washer
17. Locknut
18. Spacer
19. Bracket
20. Hose Clamp

Figure 71-70.1: Engine Drains (Sheet 3 of 5)

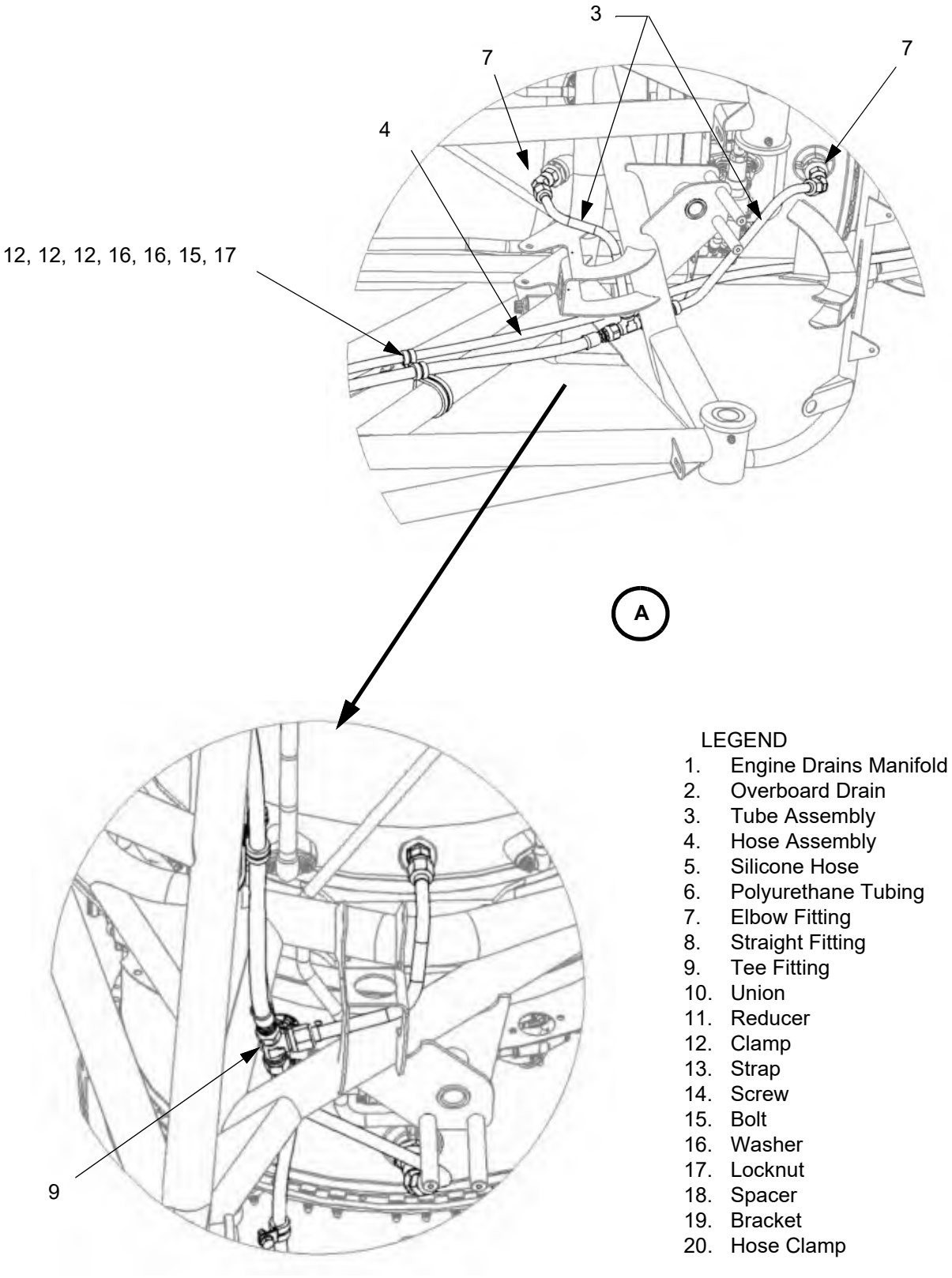

LEGEND

1. Engine Drains Manifold
2. Overboard Drain
3. Tube Assembly
4. Hose Assembly
5. Silicone Hose
6. Polyurethane Tubing
7. Elbow Fitting
8. Straight Fitting
9. Tee Fitting
10. Union
11. Reducer
12. Clamp
13. Strap
14. Screw
15. Bolt
16. Washer
17. Locknut
18. Spacer
19. Bracket
20. Hose Clamp

Figure 71-70.1: Engine Drains (Sheet 4 of 5)

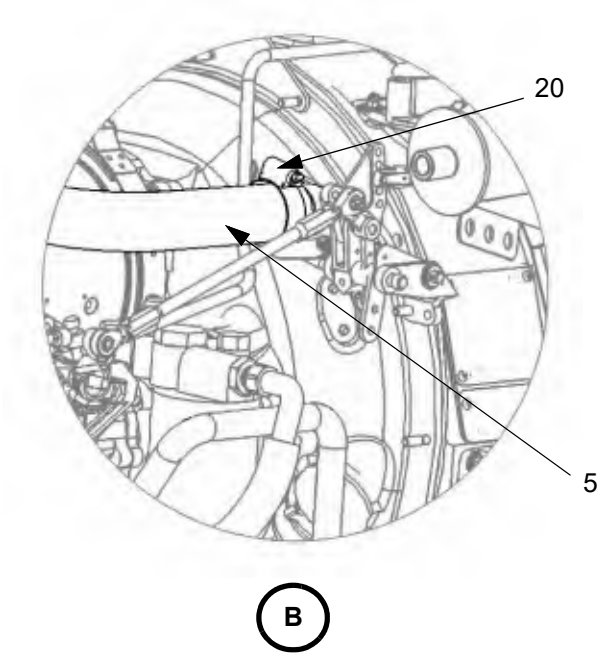

Ensure there is a minimum clearance of 3/4” between the silicone hose and moving engine control components

Use silicone sheet and straps as necessary to prevent kinking and chafing of the silicone hose.

LEGEND
1. Engine Drains Manifold
2. Overboard Drain
3. Tube Assembly
4. Hose Assembly
5. Silicone Hose
6. Polyurethane Tubing
7. Elbow Fitting
8. Straight Fitting
9. Tee Fitting
10. Union
11. Reducer
12. Clamp
13. Strap
14. Screw
15. Bolt
16. Washer
17. Locknut
18. Spacer
19. Bracket
20. Hose Clamp

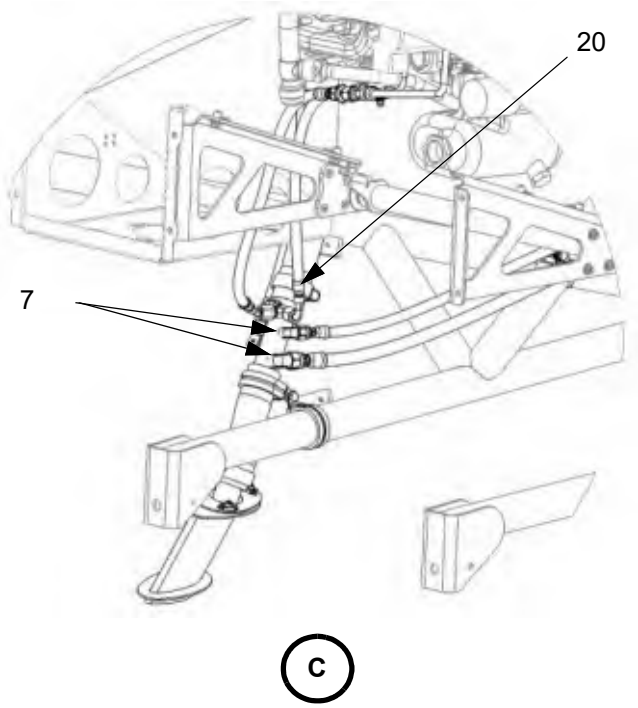

Figure 71-70.1: Engine Drains (Sheet 5 of 5)

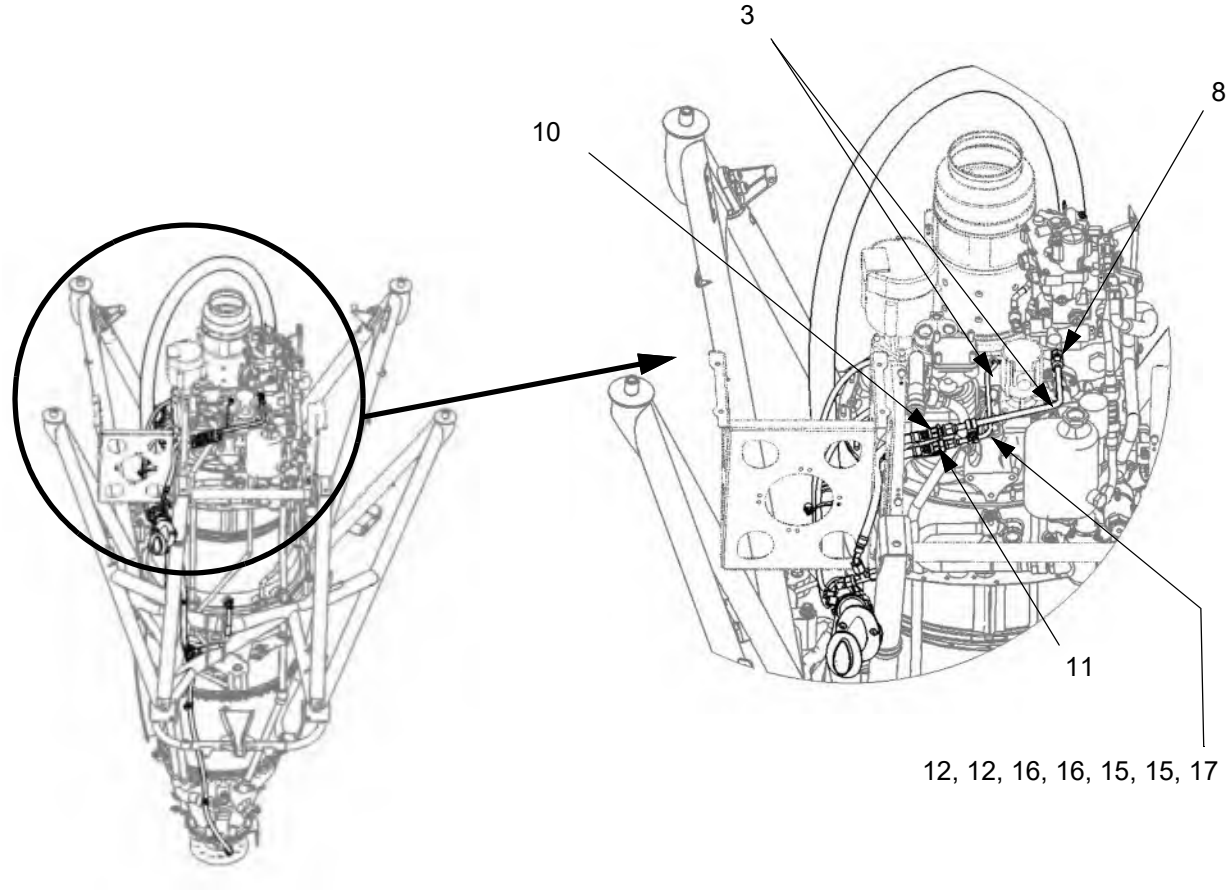

LEGEND

1. Engine Drains Manifold
2. Overboard Drain
3. Tube Assembly
4. Hose Assembly
5. Silicone Hose
6. Polyurethane Tubing
7. Elbow Fitting
8. Straight Fitting
9. Tee Fitting
10. Union
11. Reducer
12. Clamp
13. Strap
14. Screw
15. Bolt
16. Washer
17. Locknut
18. Spacer
19. Bracket
20. Hose Clamp

B. Overboard Drain

(1) Removal

(a) Remove the cowling (refer to Chapter 71-10).

(b) Remove the three screws attaching the overboard drain to the cowling.

(c) Remove the overboard drain nutplate assembly.

(d) Using a phenolic or hardwood razor carefully cut the adhesive (RTV 100) to remove the drain from the cowling.

(e) Remove all RTV 100 from the drain and the cowling.

(2) Installation

(a) Seal the perimeter of the joint between the overboard drain and the cowling using RTV 100.

(b) Put the cowling between the overboard drain and the overboard drain nutplate assembly then install three screws.

(c) Let the RTV 100 cure (refer to the adhesive manufacturer's instructions).

(d) Install the cowling (refer to Chapter 71-10).

(3) Inspection

(a) Inspect for security of attachment of the overboard drain.

(b) Inspect for security and leaks at the hose and clamps.

Figure 71-70.2: Overboard Drain

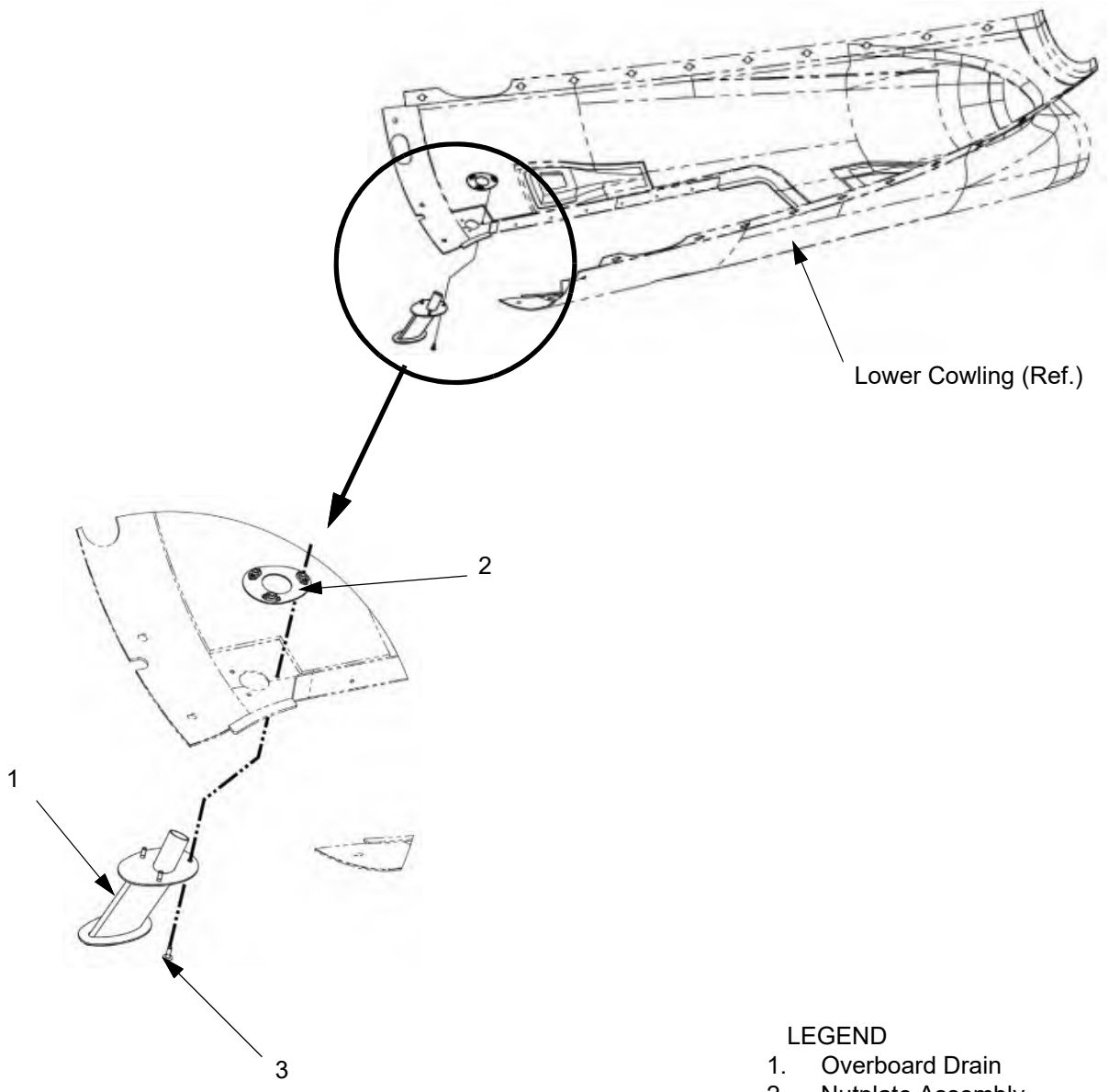

LEGEND
1. Overboard Drain
2. Nutplate Assembly
3. Screw

CHAPTER
74

Ignition System

This Page Intentionally Left Blank

List of Effective Pages

Chapter/Section	Page Number	Effective Date
74-Title	Page 1	02 Jan 2020
74-Title	Page 2	02 Jan 2020
74-LOEP	Page 1	08 Sep 2026
74-LOEP	Page 2	02 Jan 2020
74-TOC	Page 1	10 Jul 2025
74-TOC	Page 2	02 Jan 2020
74-00	Page 1	13 Apr 2020
74-00	Page 2	02 Jan 2020
74-10	Page 1	08 Sep 2026
74-10	Page 2	08 Sep 2026
74-10	Page 3	08 Sep 2026
74-10	Page 4	08 Sep 2026
74-10	Page 5	08 Sep 2026
74-10	Page 6	08 Sep 2026
74-10	Page 7	08 Sep 2026
74-10	Page 8	08 Sep 2026
74-10	Page 9	08 Sep 2026
74-10	Page 10	08 Sep 2026

This Page Intentionally Left Blank

Table of Contents

List of Effective Pages ..... 74-LOEP / Page 1
Table of Contents ..... 74-TOC / Page1

Paragraph **Page Number**

Ignition System

1. General ..... 74-00 / Page 1
2. Troubleshooting ..... 74-00 / Page 1

Ignition Exciter

1. Description ..... 74-10 / Page 1
2. Maintenance Practices ..... 74-10 / Page 1
   - A. Ignition Exciter (SN: K003 - K085 Except K014) ..... 74-10 / Page 1
   - B. Ignition Exciter (SN: K014, K086 and On) ..... 74-10 / Page 2
   - C. Spark Igniter ..... 74-10 / Page 7
   - D. Ignition System Functional Test ..... 74-10 / Page 8

This Page Intentionally Left Blank

IGNITION SYSTEM

1. General

This chapter gives information and procedures related to the engine ignition system. The airplane has a Pratt & Whitney PT6A-67A turbine engine that is started using spark igniters. The ignition system consists or an ignition exciter, two shielded ignition cables, and two igniters.

2. Troubleshooting

Refer to the Pratt &Whitney Maintenance Manual for Turboprop Gas Turbine Engine, Manual No. 3036132.

This Page Intentionally Left Blank

IGNITION CONTROL

1. Description

The ignition system is powered by 28v DC from the Essential Bus through the IGNITER circuit breaker located on the left-hand circuit breaker panel. The ignition exciter transforms the incoming electrical power into a high energy pulsed output. The exciter internal storage capacitor is progressively charged until the stored energy equals approximately four joules. At this power level, an internal spark gap arcs and lets the energy be discharged to the igniters.

2. Maintenance Practices

A. Ignition Exciter (SN: K003 - K085 Except K014)

(1) Removal

(a) Set the BATT 1 and BATT 2 switches to off.

(b) Pull and collar the IGNITER circuit breaker.

(c) Disconnect external electrical power from the airplane (refer to Chapter 24-40).

WARNING: Wait at least six minutes after power has been removed from the ignition system before doing any maintenance. Residual energy in the ignition system is unpredictable, even after a six minute waiting period, further precautions must be taken. Use insulated tools, never touch the outputs with bare hands, and disconnect the coupling nuts at the ignition exciter first.

(d) Remove the engine cowling (refer to Chapter 71-10).

(e) Remove the left battery (K003 - K058, except K014) (refer to Chapter 24-30).

Note: Hi-Loks are used for exciter installation in K059-K085, battery removal is not required.

(f) Disconnect the electrical connector and ignition cables from the ignition exciter.

(g) Remove the ignition exciter:

(i) (K003 - K058, except K014) Remove the screws, washers, and nuts that attach the ignition exciter to the battery tray and remove the ignition exciter.

(ii) (K059 - K085) Remove the nuts from the Hi-Loks that attach the ignition exciter to the battery tray and remove the ignition exciter.

(2) Installation

(a) Put the ignition exciter in position.

(b) Attach the ignition exciter to the battery tray as follows:

(i) (K003 - K058, except K014) Install the screws, washers, and nuts that attach the ignition exciter to the battery tray.
(ii) (K059 - K085) install the nuts on the Hi-Loks.

(c) Lightly coat the threads of the ignition cables with Miller-Stephenson PTFE dry lubricant release agent, P/N MS-122XD.

CAUTION: When loosening/tightening coupling nuts on the exciter or igniter, do not let the ignition cable braiding or ferrule turn with the coupling.

(d) Install the ignition cables into the ignition exciter, then tighten the couplings finger tight plus 45°. Install safety wire.

(e) Connect the electrical connector to the exciter.

(f) Install the left battery (K003 - K058, except K014) (refer to Chapter 24-30).

(g) Install the engine cowling (refer to Chapter 71-10).

(h) Reset the IGNITER circuit breaker.

(i) Do the Ignition System Functional Test, refer to Chapter 74-10.2.D

B. Ignition Exciter (SN: K014, K086 and On)

(1) Removal

(a) Set the BATT 1 and BATT 2 switches to off.

(b) Pull and collar the IGNITER circuit breaker.

(c) Disconnect external electrical power from the airplane (refer to Chapter 24-40).

WARNING: Wait at least six minutes after power has been removed from the ignition system before doing any maintenance. Residual energy in the ignition system is unpredictable, even after a six minute waiting period, further precautions must be taken. Use insulated tools, never touch the outputs with bare hands, and disconnect the coupling nuts at the ignition exciter first.

CAUTION: Ensure that all power is removed from the airplane before starting maintenance.

(d) Remove the engine cowling (refer to Chapter 71-10).

(e) Disconnect the electrical connector and ignition cables from the ignition exciter.

(f) Remove the (4) bolts and washers that attach the ignition exciter to the battery case.

(g) Remove the ignition exciter.

(2) Installation

(a) Put the ignition exciter in position.

(b) Install the (4) bolts and washers that attach the ignition exciter to the battery case.

(c) Lightly coat the threads of the ignition cables with Miller-Stephenson PTFE dry lubricant release agent, P/N MS-122XD.

CAUTION: When loosening/tightening coupling nuts on the exciter or igniter, do not let the ignition cable braiding or ferrule turn with the coupling.

(d) Install the ignition cables into the ignition exciter, then tighten the couplings finger tight plus 45°. Install safety wire.

(e) Connect the electrical connector to the exciter.

(f) Install the engine cowling (refer to Chapter 71-10).

(g) Reset the IGNITER circuit breaker.

(h) Do the Ignition System Functional Test, refer to Chapter 74-10.2.D

Figure 74-10.1: Ignition Exciter (Sheet 1 of 3)

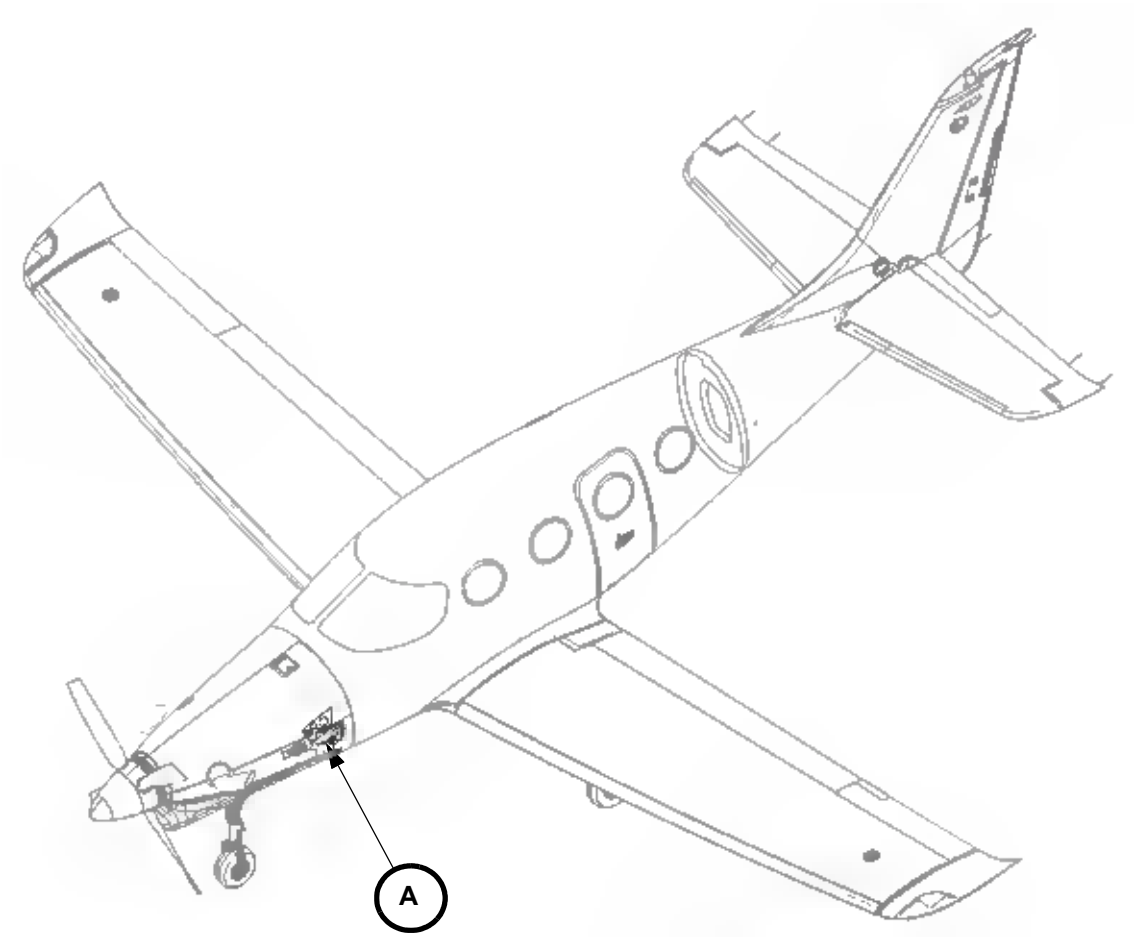

Figure 74-10.1: Ignition Exciter (K003-K085 Except K014)(Sheet 2 of 3)

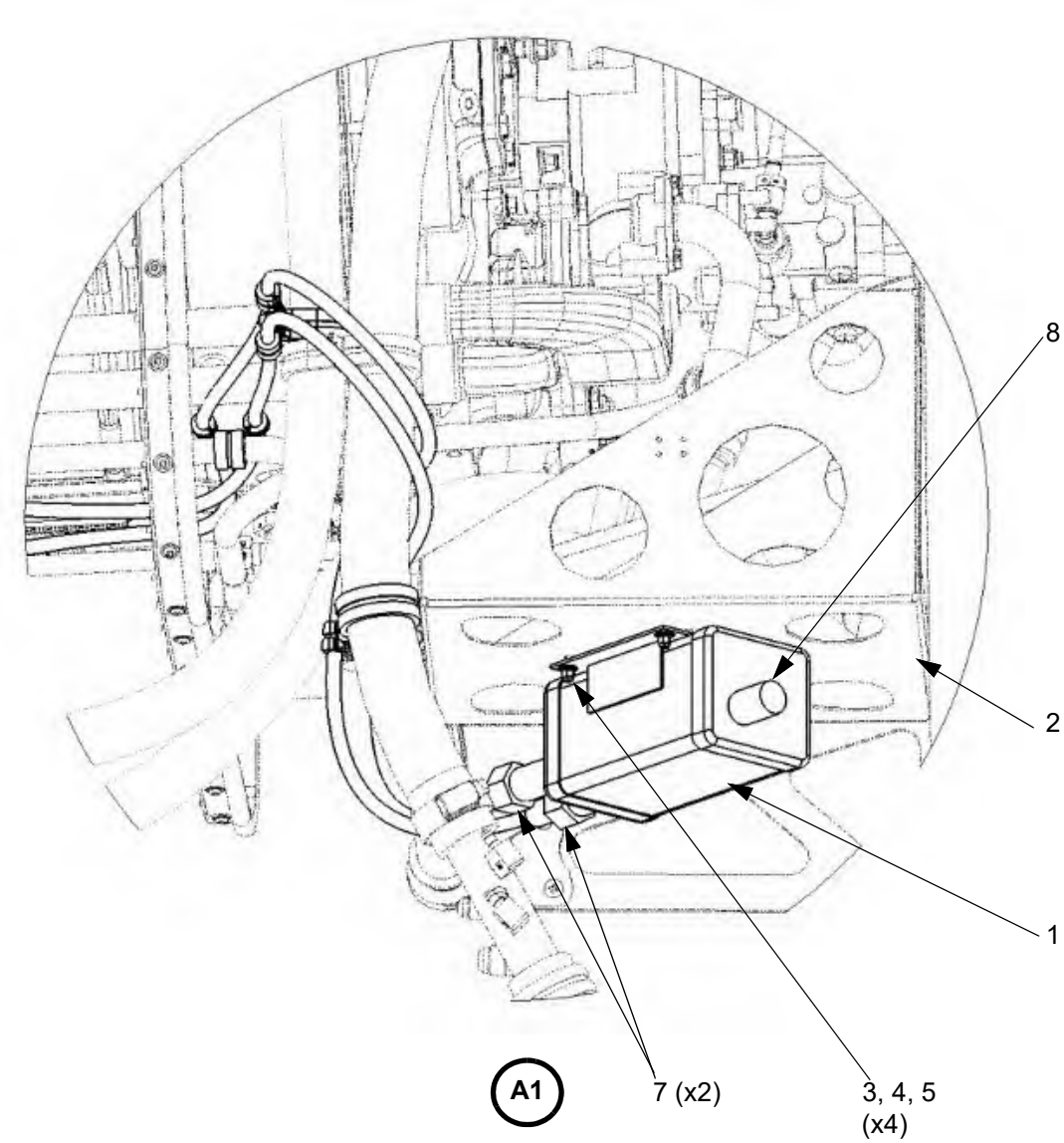

LEGEND

1. Ignition Exciter
2. Battery Tray (Ref.)
3. Bolt
4. Washer
5. Nut
6. Hi-Lok
7. Ignition Cables
8. Electrical Connector

Figure 74-10.1: Ignition Exciter (K014, K086 and On) (Sheet 3 of 3)

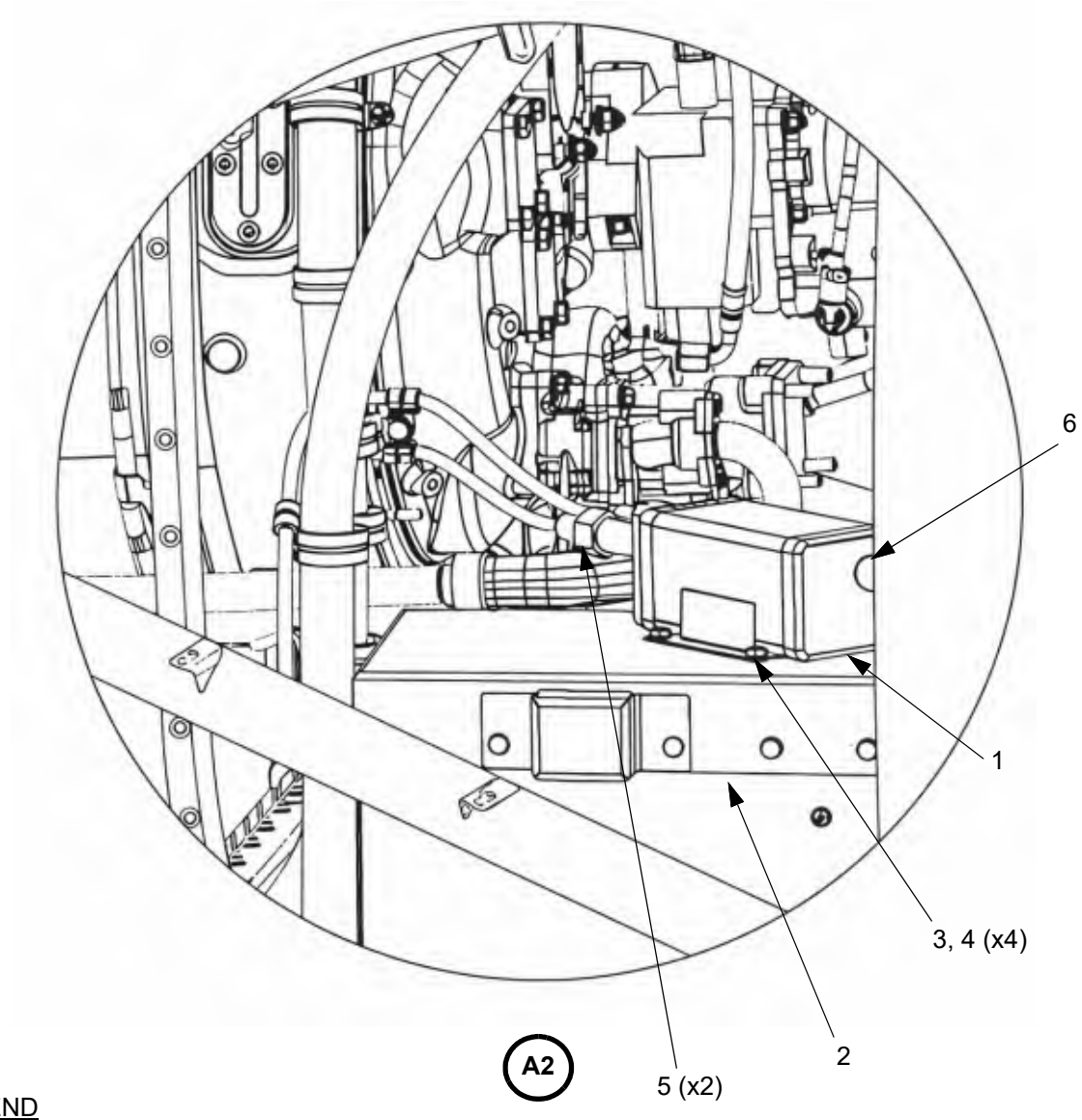

LEGEND

1. Ignition Exciter
2. Battery Box (ref.)
3. Bolt
4. Washer
5. Ignition Cables
6. Electrical Connector

C. Spark Igniter

(1) Removal

(a) Set the BATT 1 and BATT 2 switches to off.

(b) Pull and collar the IGNITER circuit breaker.

(c) Disconnect external electrical power from the airplane (refer to Chapter 24-40).

CAUTION: Ensure that all power is removed from the airplane before starting maintenance.

WARNING: Wait at least six minutes after power has been removed from the ignition system before doing any maintenance. Residual energy in the ignition system is unpredictable, even after a six minute waiting period, further precautions must be taken. Use insulated tools, never touch the outputs with bare hands, and disconnect the coupling nuts at the ignition exciter first.

(d) Remove the cowling (refer to Chapter 71-10).

(e) Remove the spark igniter in accordance with Chapter 74-20-00 of the current revision of Pratt & Whitney Engine Maintenance Manual, P/N: 3036132.

(2) Installation

(a) Install the spark igniter in accordance with Chapter 74-20-00 of the current revision of Pratt & Whitney Engine Maintenance Manual, P/N: 3036132.Install the cowling (refer to Chapter 71-10).

(b) Install the cowling (refer to Chapter 71-10).

(c) Reset the IGNITER circuit breaker.

(d) Do the Ignition System Functional Test, refer to Chapter 74-10.2.D

Figure 74-10.2: Spark Igniter

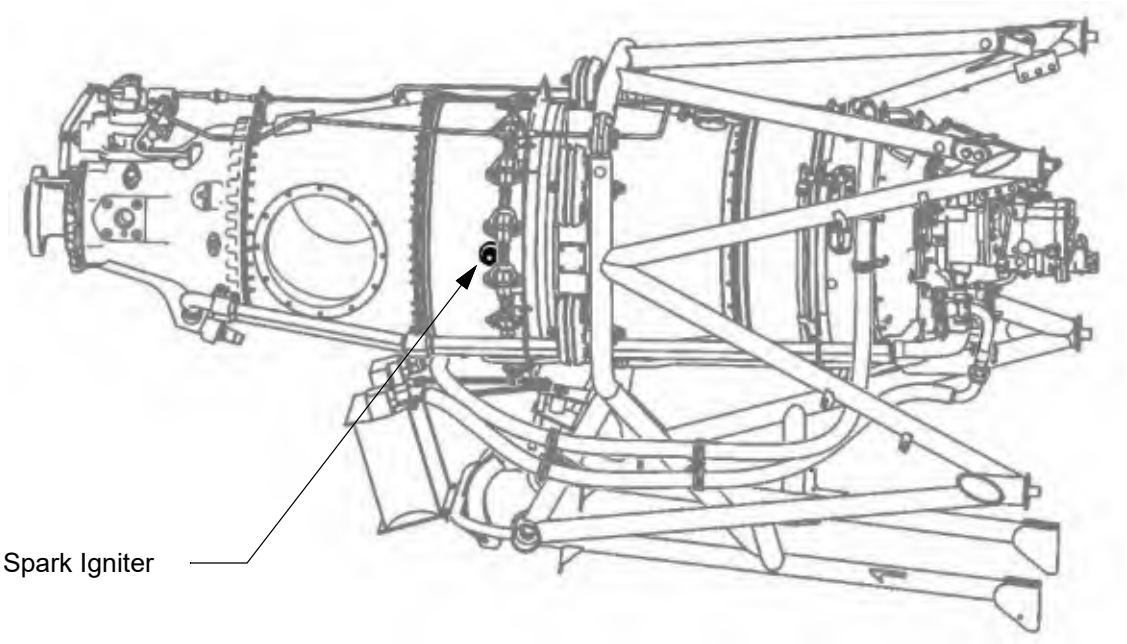

The left side spark igniter is shown, right side spark igniter is opposite.

D. Ignition System Functional Test

Do a functional test of the ignition system after any maintenance has been done on the ignition system or to verify correct system operation.

(1) Remove the cowling, refer to Chapter 71-10.

(2) Set the BATT 1, BATT 2, and IGNITION switches to off.

(3) Pull and collar the IGNITER circuit breaker.

WARNING: Wait at least six minutes after power has been removed from the ignition system before doing any maintenance. Residual energy in the ignition system is unpredictable, even after a six minute waiting period, further precautions must be taken. Use insulated tools, never touch the outputs with bare hands, and disconnect the coupling nuts at the ignition exciter first.

(4) Remove the left and right igniters, refer to Chapter 74-10.2.C.

(5) Temporarily install the igniters on the igniter cables.

CAUTION: Make sure the igniter ends are not close to any components or structure.

(6) Reset the IGNITER circuit breaker.

(7) Set the BATT 1 and BATT 2 switches to ON.

(8) Set the IGNITION switch to ON.

WARNING: Stay a safe distance from the igniters while they are operating.

(9) The igniters should fire approximately once every second.

Note: The spark igniters should spark at 0.8 to 1.0 spark per second with 9 vdc applied and at 1.4 to 4.0 sparks per second with 30 vdc applied. Voltage to the ignition exciter varies depending on the load drawn from the electrical system by the starter/generator.

(10) If either igniter doesn't fire, test as follows:

(a) Make sure the exciter is receiving power. If it is not, isolate the electrical fault.

(b) Test the igniter cables in accordance with the Pratt &Whitney Maintenance Manual for Turboprop Gas Turbine Engine, Manual No. 3036132. Replace the cables as needed.

(c) Inspect the igniters in accordance with the Pratt &Whitney Maintenance Manual for Turboprop Gas Turbine Engine, Manual No. 3036132. Replace the igniters as needed.

(d) If the ignition exciter is receiving power, and the cables and igniters test correctly, the exciter is faulty.

(11) Set the IGNITION switch to off.

(12) Set the BATT 1 and BATT 2 switches to off.

WARNING: Wait at least six minutes after power has been removed from the ignition system before doing any maintenance. Residual energy in the ignition system is unpredictable, even after a six minute waiting period, further precautions must be taken. Use insulated tools, never touch the outputs with bare hands, and disconnect the coupling nuts at the ignition exciter first.

(13) Remove the left and right igniters from the igniter cables.

(14) Install the left and right igniters, refer to Chapter 74-10.2.C.

(15) Lightly coat the threads of the ignition exciter connectors with Miller-Stephenson PTFE dry lubricant release agent, P/N MS-122XD.

(16) Thread the cable assembly onto the spark igniter, then tighten coupling nuts finger tight plus 45 degrees. Install safety wire.

Note: Steps 17-33 are only required when performing this functional test for the Annual/Progressive Inspection requirements.

(17) Set the BATT 1 and BATT 2 switches to ON.
(18) Pull the IGNITER circuit breaker.
(19) Pull the RIGHT WOW circuit breaker.
(20) Set the IGNITER switch to ON.
  (a) Make sure the igniters do not fire.
(21) Set the IGNITER switch to AUTO.
(22) Reset the RIGHT WOW circuit breaker.
(23) Reset the IGNITER circuit breaker.
(24) Make sure the aircraft is in a weight-on-wheels configuration.
(25) Set the IGNITER switch to ON.
  (a) Make sure the igniters fire.
(26) Set the IGNITER switch to AUTO.
  (a) Make sure the igniters stop firing.
(27) Pull the RIGHT WOW circuit breaker.
  (a) Make sure the igniters fire.
(28) Reset the RIGHT WOW circuit breaker.
  (a) Make sure the igniters stop firing.
(29) With the IGNITER switch still in AUTO mode, put the aircraft in a weight-off-wheels configuration by actuating the left and right WOW switches.
(30) Make sure the igniters fire.
(31) Return the aircraft in a weight-on-wheels configuration.
(32) Set the IGNITER switch to off.
(33) Set the BATT 1 and BATT 2 switches to off.
(34) Disconnect external electrical power from the airplane (refer to Chapter 24-40).
(35) Install the cowling (refer to Chapter 71-10).

CHAPTER
76

Engine Controls

This Page Intentionally Left Blank

List of Effective Pages

Chapter/Section	Page Number	Effective Date
76-Title	Page 1	02 Jan 2020
76-Title	Page 2	02 Jan 2020
76-LOEP	Page 1	19 Jan 2023
76-LOEP	Page 2	02 Jan 2020
76-TOC	Page 1	02 Jan 2020
76-TOC	Page 2	02 Jan 2020
76-00	Page 1	10 Jul 2025
76-00	Page 2	02 Jan 2020
76-10	Page 1	02 Jan 2020
76-10	Page 2	02 Jan 2020
76-10	Page 3	02 Jan 2020
76-10	Page 4	10 Jul 2025
76-10	Page 5	10 Jul 2025
76-10	Page 6	10 Jul 2025
76-10	Page 7	10 Jul 2025
76-10	Page 8	10 Jul 2025
76-10	Page 9	10 Jul 2025
76-10	Page 10	10 Jul 2025
76-10	Page 11	10 Jul 2025
76-10	Page 12	10 Jul 2025
76-10	Page 13	10 Jul 2025
76-10	Page 14	10 Jul 2025
76-10	Page 15	10 Jul 2025
76-10	Page 16	10 Jul 2025
76-10	Page 17	10 Jul 2025
76-10	Page 18	10 Jul 2025
76-10	Page 19	10 Jul 2025
76-10	Page 20	10 Jul 2025
76-10	Page 21	10 Jul 2025
76-10	Page 22	10 Jul 2025
76-10	Page 23	10 Jul 2025
76-10	Page 24	10 Jul 2025
76-10	Page 25	10 Jul 2025
76-10	Page 26	10 Jul 2025
76-10	Page 27	10 Jul 2025
76-10	Page 28	10 Jul 2025
76-10	Page 29	10 Jul 2025
76-10	Page 30	10 Jul 2025
76-10	Page 31	10 Jul 2025
76-10	Page 32	10 Jul 2025

76-10 ..... Page 33 ..... 10 Jul 2025
76-10 ..... Page 34 ..... 10 Jul 2025
76-10 ..... Page 35 ..... 10 Jul 2025
76-10 ..... Page 36 ..... 10 Jul 2025

Table of Contents

List of Effective Pages ..... 76-LOEP / Page 1
Table of Contents ..... 76-TOC / Page1

Paragraph **Page Number**

Engine Controls

1. General ..... 75-10 / Page 1

Power Control

1. Description ..... 76-10 / Page 1
2. Maintenance Practices ..... 76-10 / Page 1
   - A. Control Quadrant (SN: K003 - K085 except K014) ..... 76-10 / Page 1
   - B. Control Quadrant (SN: K014, K086 and On) ..... 76-10 / Page 4
   - C. Power Control Cable ..... 76-10 / Page 7
   - D. Propeller Control Cable ..... 76-10 / Page 13
   - E. Fuel Condition Cable ..... 76-10 / Page 17
   - F. Fuel Condition Unit (FCU) Manual Override (MOR) Cable ..... 76-10 / Page 22
   - G. Control Cable Inspection ..... 76-10 / Page 33
   - H. Beta Block ..... 76-10 / Page 34

This Page Intentionally Left Blank

ENGINE CONTROLS

1. General

Engine controls for the E1000 are the power lever, propeller lever, condition lever, and Manual Override Lever (MOR).

The power lever (POWER) provides input to the Fuel Control Unit (FCU) to control the fuel scheduling of the engine. The power lever also provides fuel scheduling and propeller pitch control when in “Beta” mode. The engine and propeller enter “Beta” mode when the power lever is lifted and moved aft past the IDLE gate. “Beta” mode provides varying degrees of reverse thrust to the pilot.

The propeller (PROP) lever provides input to the propeller governor to control propeller speed. Moving the lever aft into the “FEATHER” position feathers the propeller.

The condition (COND) lever provides control of fuel to the FCU for starting and shut-down. Additionally, “LOW” and “HIGH” idle positions allow for varied idle speeds based on engine load requirements.

The MOR provides a mechanical connection to the FCU through a separate lever beside the power lever. In the event of a loss of response from the power lever, the MOR can be unstowed and used to control fuel input to the engine manually. The MOR is for emergency use only.

Aircraft SN K014 and K086 and on incorporate an Autothrottle system that is integrated with the existing Garmin GFC 700 Auto Flight Control System (AFCS). The Autothrottle system provides thrust/power and speed control by controlling the power lever with a servo mounted in the pedestal. This also allows for the addition of engine and speed protection by monitoring flight and engine data and making adjustments to power/thrust accordingly. The system is designed to fly the aircraft accounting for phase of flight and flight director mode and is intended to provide power/thrust or speed automation through the entire flight. The autothrottle servo position is monitored by a Throttle Lever Angle (TLA) sensor. Function is monitored to annunciate potential failures and disconnect the servo accordingly. Additionally, the system will disconnect whenever a force exceeding the overpower limit is applied by the pilot to overpower the servo.

This Page Intentionally Left Blank

POWER CONTROL

1. Description

A. Overview

Engine controls for this airplane are a power lever that controls the amount of fuel supplied to the engine, a propeller lever that controls the speed and pitch of the propeller, a condition lever for fuel flow control, and a manual fuel override lever that overrides the engine's Fuel Control Unit (FCU) to provide fuel to the engine.

2. Maintenance Practices

A. Control Quadrant (SN: K003 - K085 except K014)

(1) Removal

(a) Remove the (4) screws that attach the propeller control and fuel condition handles to their respective levers. Remove the handles.

(b) Remove the (3) screws that attach the quadrant closeout panel and face panel to the power quadrant. Remove the closeout and face panel.

(c) Remove the instrument panel pedestal finish panels (refer to Chapter 25-10).

(d) Disconnect the electrical connection to the power lever.

(e) Disconnect the rod ends from the FCU MOR, power, propeller, and condition control levers.

(f) If removing the backing plate:

(i) Remove the clamps that attach the FCU MOR and propeller control cables to the backing plate arms.

(ii) Remove the clamp bracket that attached the power and condition cables to the backing plate.

(g) Remove the six bolts and washers attaching the control quadrant to the instrument panel pedestal and control quadrant backing plate then remove the control quadrant.

(2) Installation

(a) If removed, put the backing plate in position in the pedestal.

(b) Put the control quadrant in position on the pedestal and align the bolt holes with the pedestal and backing plate.

(c) Install the bolts and washers that attach the control quadrant to the pedestal and backing plate. Torque the bolts to 20 - 25 in-lbs.

(d) Attach the rod ends to the FCU MOR and condition control levers with the bolts, washers, and self-locking nuts.

(e) Attach the rod ends to the power and propeller control levers with the washers and cotter pins.

CAUTION: Make sure the raised rib in the clamp or clamp bracket aligns with the groove in the cable housing end cap. The cable may be damaged and not properly secured if the clamp/clamp bracket does not engage the end cap correctly.

(f) If the backing plate was removed, install the (2) clamps and clamp bracket that attach the cables to the backing plate. Tighten the nuts to 20 - 25 in-lbs.

(g) Connect the power lever electrical connector.

(h) Install the instrument panel pedestal finish panels (refer to Chapter 25-10).

(i) Put the quadrant face panel and closeout panel in position and install the (3) screws that attach the panels to the power quadrant.

(j) Install the handles of each control lever. Use a small amount of Loctite 222 on the female threads of the levers. Torque the screws to 12 - 15 in-lbs.

(k) Do Engine Checkout Procedures Chapter 71-00.C.4(A - N, P, S).

Figure 76-10.1: Engine Control Quadrant (SN: K003 -K085 excluding K014)

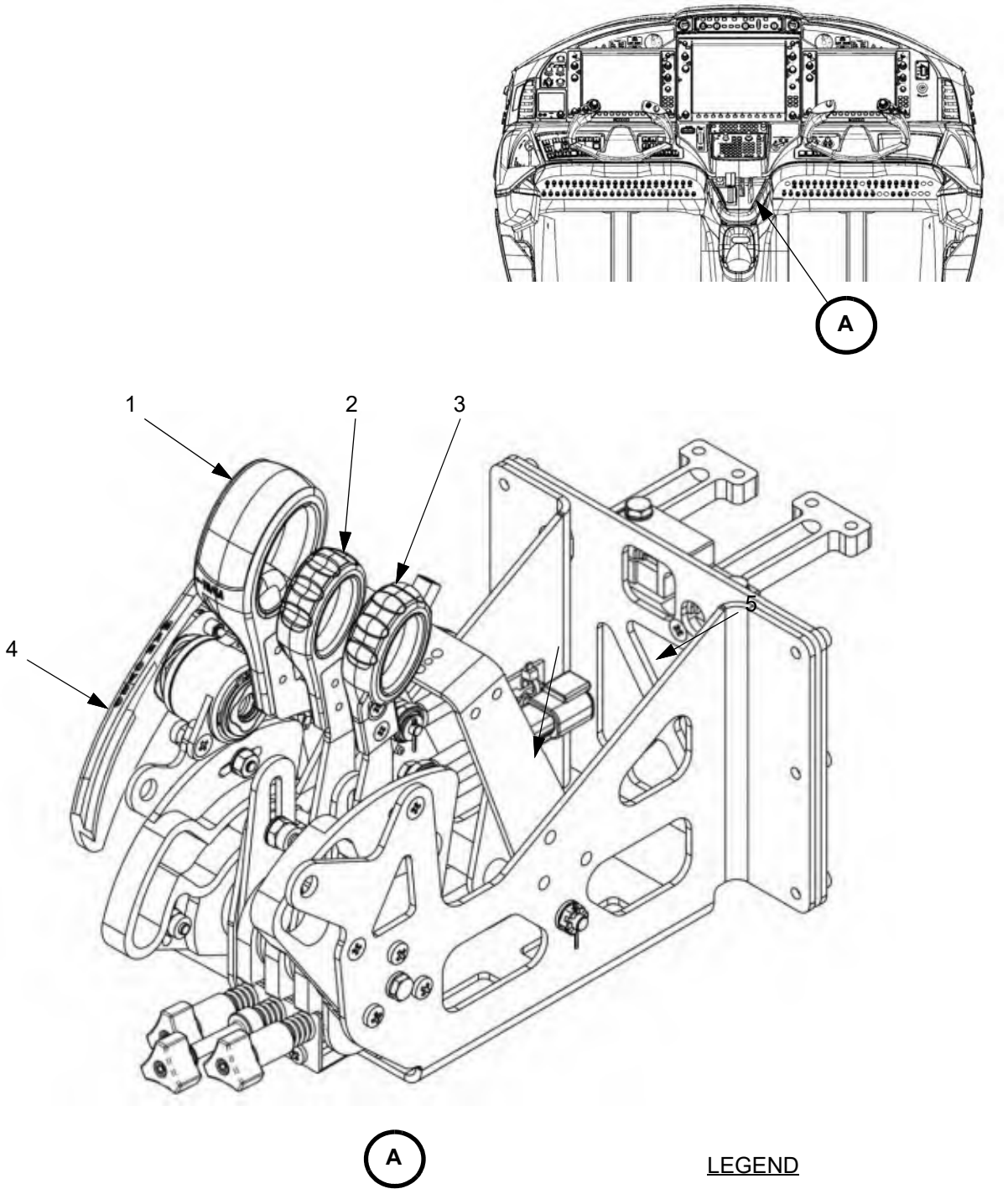

LEGEND

1. Power Control Lever
2. Propeller Control Lever
3. Fuel Condition Lever
4. FCU Override Lever
5. Backing Plate

B. Control Quadrant (SN: K014, K086 and On)

(1) Removal

Note: Refer to Chapter 22-30 for AutoThrottle Servo maintenance procedures.

(a) Remove the (4) screws that attach the propeller control and fuel condition handles to their respective levers. Remove the handles.

(b) Remove the (3) screws that attach the quadrant closeout panel and face panel to the power quadrant. Remove the closeout and face panel.

(c) Remove the instrument panel pedestal finish panels (refer to Chapter 25-10).

(d) Disconnect the electrical connection to the power lever, TLA Sensor, and Auto-Throttle Servo.

(e) Disconnect the rod ends from the FCU MOR, power, propeller, and condition control levers.

(f) If removing the backing plate:

(i) Remove the clamps that attach the FCU MOR and propeller control cables to the backing plate arms.

(ii) Remove the clamp bracket that attached the power and condition cables to the backing plate.

(g) Remove the bolts and washers that attach the servo bracket to the fuel selector support bracket.

(h) Remove the (6) bolts and washers attaching the control quadrant to the instrument panel pedestal and control quadrant backing plate then remove the control quadrant.

(2) Installation

(a) If removed, put the backing plate in position in the pedestal.

(b) Put the control quadrant in position on the pedestal and align the bolt holes with the pedestal and backing plate.

(c) Install the bolts and washers that attach the control quadrant to the pedestal and backing plate. Torque the bolts to 20 - 25 in-lbs.

(d) Install the bolts and washers that attach the servo bracket to the fuel selector bracket. Torque the bolts to 20 - 25 in-lbs.

(e) Attach the rod ends to the FCU MOR and condition control levers with the bolts, washers, and self-locking nuts.

(f) Attach the rod ends to the power and propeller control levers with the washers and cotter pins.

CAUTION: Make sure the raised rib in the clamp or clamp bracket aligns with the groove in the cable housing end cap. The cable may be damaged and not properly secured if the clamp/clamp bracket does not engage the end cap correctly.

(g) If the backing plate was removed, install the (2) clamps and clamp bracket that attach the cables to the backing plate. Tighten the nuts to 20 - 25 in-lbs.

(h) Connect the electrical connection to the power lever, TLA Sensor, and AutoThrottle Servo.

(i) Install the instrument panel pedestal finish panels (refer to Chapter 25-10).

(j) Put the quadrant face panel and closeout panel in position and install the (3) screws that attach the panels to the power quadrant.

(k) Install the handles of each control lever. Use a small amount of Loctite 222 on the female threads of the levers. Torque the screws to 12 - 15 in-lbs.

(l) Do Engine Checkout Procedures Chapter 71-00.C.4(A - N, P, S).

(m) Do the AutoThrottle Operational Check, refer to Chapter 22-30.C

Figure 76-10.2: Engine Control Quadrant (SN: K014, K086 and On) (Sheet 1 of 2)

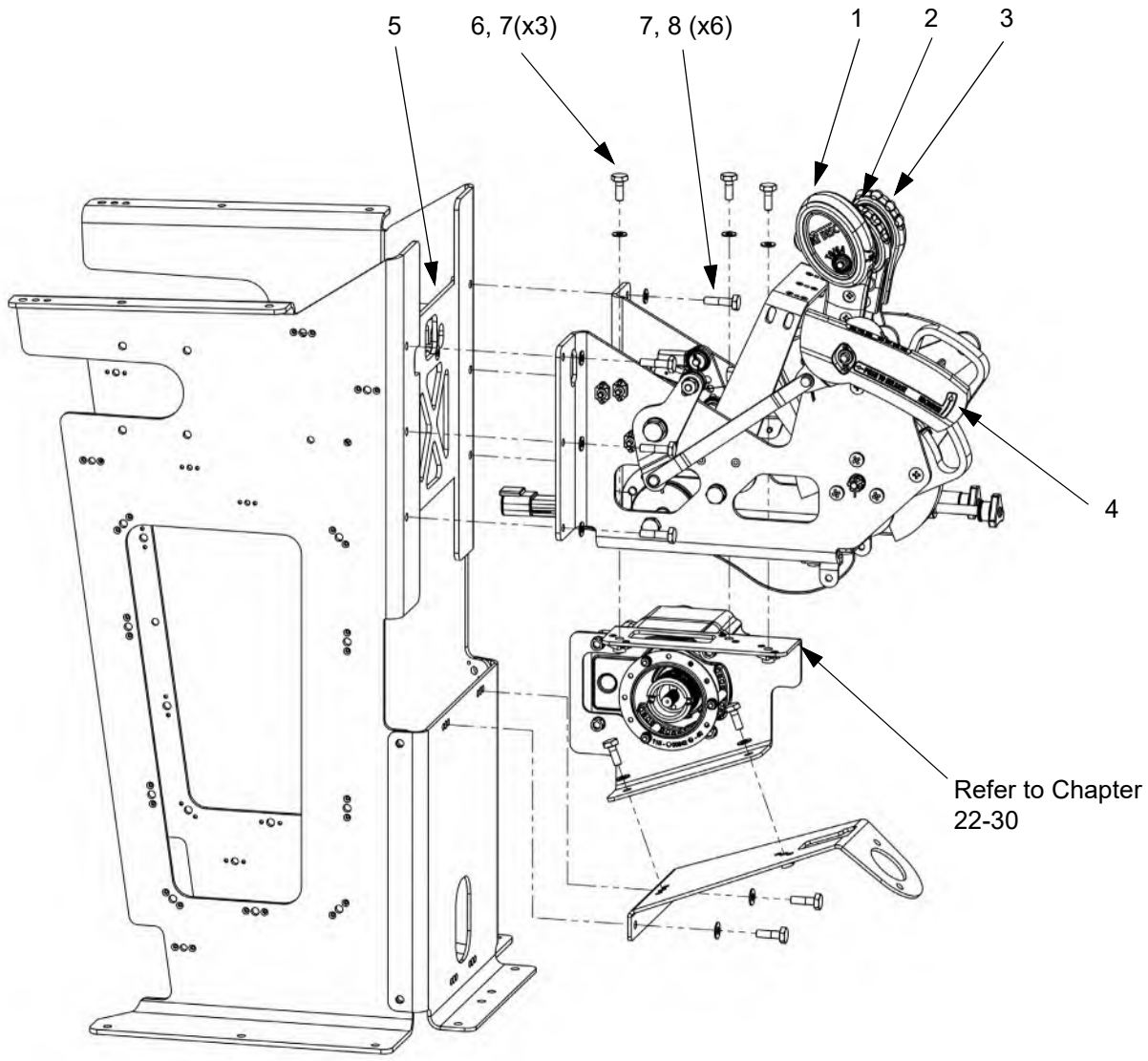

LEGEND

1. Power Control Lever
2. Propeller Control Lever
3. Fuel Condition Lever
4. FCU Override Lever
5. Backing Plate
6. Bolt
7. Washer

C. Power Control Cable

(1) Removal

(a) Remove the cowling (refer to Chapter 71-10).

(b) Remove the right intercooler (refer to Chapter 21-20).

(c) Remove the firewall blanket penetration panels (refer to Chapter 71-30).

(d) Remove the (4) screws that attach the propeller control and fuel condition handles to their respective levers. Remove the handles.

(e) Remove the (3) screws that attach the quadrant closeout panel and face panel to the power quadrant. Remove the closeout and face panel.

(f) Remove the cotter pin and washers that connect the power control cable rod end to the power control lever in the quadrant.

(g) Remove the bolt, washers, nut, and cotter pin that attach the power control cable rod end to the bracket on the cam follower at the cambox.

(h) Remove the rod ends from the cable.

Note: Make note of the rod end thread engagement on both cable ends for installation of the new cable.

Note: Replacement of the jam nut is recommended, the old jam nut may be discarded with the cable.

(i) Remove the cable clamp that attaches the power cable to the engine bracket.

(j) Remove the cable clamp bracket that attaches the power and condition cables to the quadrant.

(k) Remove the cushioned clamps that attach the power control cable to the other cables.

(l) Remove the (4) nuts that attach the capture plate to the spherical bulkhead fitting. Remove the capture plate and spherical halves.

(m) Remove the cable.

(2) Installation

CAUTION: Do not move the cockpit power lever into reverse (Beta) position without disconnecting the reversing cable clevis from the beta arm. Failure to do so will damage the linkage.

(a) Route the cable aft through the firewall bulkhead fitting. Do not install the bulkhead fitting at this time.

(b) Route the cable from the firewall to the engine cambox. Make sure cable routing criteria in 76-10.2.F(1)(g) are met.

(c) Install the rod ends with new AN315-3R jam nuts using the thread engagement noted on the old cable as a starting point. Do not torque or safety at this time.

(d) Temporarily connect the rod ends to the power control lever in the quadrant and the bracket on the cambox.

CAUTION: Make sure the raised rib on the cable clamp and cable clamp bracket align with the groove in the cable housing end cap. The cable may be damaged and not properly secured if the clamp/clamp bracket does not engage the end cap correctly. Refer to Figure 76-10.7, Sheet 6.

(e) Install the cable clamp that attaches the power cable to the engine bracket. Torque the nuts to 20 -25 in-lbs.

(f) Install the cable clamp bracket that attaches the power cable and condition cable to the quadrant. Torque the nuts to 20 -25 in-lbs.

(g) Install the cushioned clamps that attach the power control cable to the other cables. Torque the nuts to 20 -25 in-lbs.

(h) Install the spherical halves and capture plate in the bulkhead fitting. Install the (4) nuts that attach the capture plate to the spherical bulkhead fitting. Torque the nuts to 12 - 15 in-lbs.

(i) Install the firewall blanket penetration panels (refer to Chapter 71-30).

(j) Put the cockpit power lever in the IDLE position (against quadrant gate).

Note: Make sure the power lever stays in the IDLE position during adjustment.

(k) Verify the rigging hole in the rigging plate lines up with the rigging holes in the cambox input lever and the propeller reversing cam bracket using an #41 drill bit.

(l) Adjust the power cable rod ends for a slip fit with the cambox bracket.

(m) Remove backlash and set the quadrant gate position as follows:

(i) Remove the rig pin from the reversing cam.

(ii) Loosen the adjusting screws on the power lever quadrant gate.

(iii) While holding the power lever against the idle stop on the quadrant gate, move the power lever and quadrant gate forward until the max power stop on the FCU is contacted.

(iv) Slowly move the power lever and quadrant gate aft until the rigging hole in the rigging plate lines up with the rigging holes in the cambox input lever and the propeller reversing cam bracket. Install a #41 drill bit in the rigging holes.

(v) Make sure the power gate in the quadrant does not move and torque the gate adjusting screws to 20 -25 in-lbs.

(vi) Remove the #41 drill bit from the rig pin hole.

CAUTION: Do not move the cockpit power lever into reverse (Beta) position without disconnecting the reversing cable clevis from the beta arm. Failure to do so will damage the linkage.

(n) Disconnect the reversing cable from the beta arm.

(o) Temporarily install the quadrant face panel and closeout panel on the power quadrant. Remove the panel as needed to make adjustments.

(p) Make sure the power lever does not contact the trim panel on the quadrant at either the Max power or Max reverse position.

(q) Move the power lever through its full range of travel and make sure the Max Power and Max Reverse stops are contacted on the FCU.

(r) Install the bolt, washers, and nut that attach the power cable rod end to the cambox bracket. Torque the nut to 20 - 25 in-lbs and install the cotter pin.

(s) Install the washers and cotter pin that attach the power cable rod end to the power lever in the quadrant.

(t) Connect the reversing cable to the beta arm. Torque the nut to 12 - 18 in-lbs. and install the cotter pin.

(u) Move the power lever to MAX and back to idle, make sure the reversing cam and beta valve do not move.

(v) Apply Loctite 242 to both rod end jam nuts on the power control cable and torque the jam nuts to 20 - 25 in-lbs.

(w) Put the quadrant face panel and closeout panel in position and install the (3) screws that attach the panels to the power quadrant.

(x) Install the handles of each control lever. Use a small amount of Loctite 222 on the female threads of the levers. Torque the screws to 12 - 15 in-lbs.

(y) Install the right intercooler (refer to Chapter 21-20).

(z) Install the cowling (refer to Chapter 71-10).

(aa) Do the Power Linkage Static Check, Beta Valve and Sliding Ng Reset Link Static Check, Pre-Operational Check, Pre-Start Check, Engine Starting, Prop RPM Max Reverse Static Check, Low “Ground” Idle Ng Limits Check, Engine Performance Check, and Engine Shutdown (refer to Chapter 71-00).

Figure 76-10.3: Power Control Cable (Sheet 1 of 3)

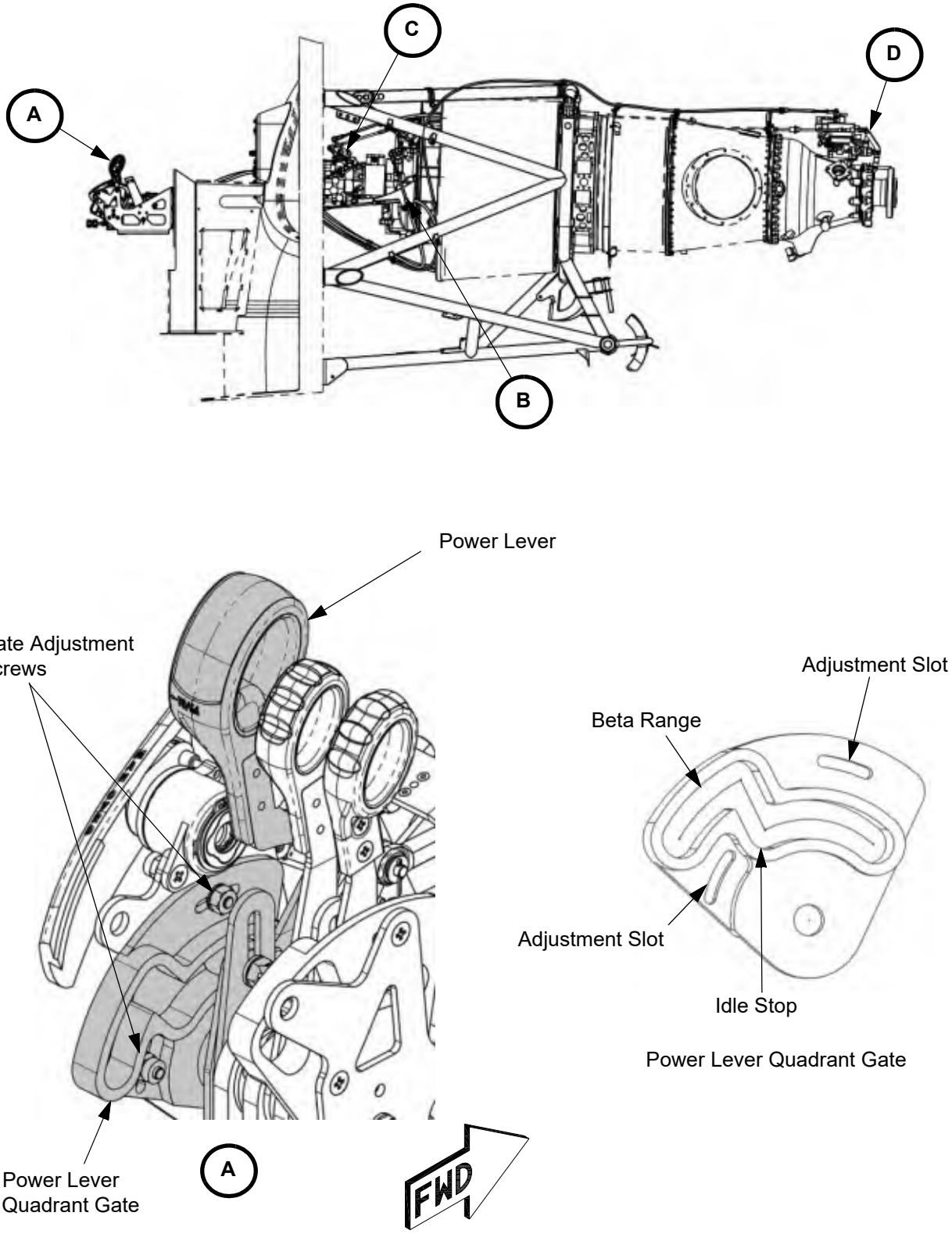

Figure 76-10.2: Power Control Cable (Sheet 2 of 3)

LEGEND

1. Bolt
2. Washer
3. Castellated Nut
4. Cotter Pin
5. Power Control Cable
6. Bracket
7. Cable Clamp
8. Reversing Cam
9. Cam Follower (Shown at idle.)
10. Reversing Cable
11. FCU Interconnect Rod
12. Deadband Screw
13. High Idle Roller
14. High Idle Cam
15. Low Idle Adjustment
16. FCU Lever Clamping Screw (For low idle adjustments.)
17. Over-Center Link
18. Rig Pin Hole (#41 Drill Bit)

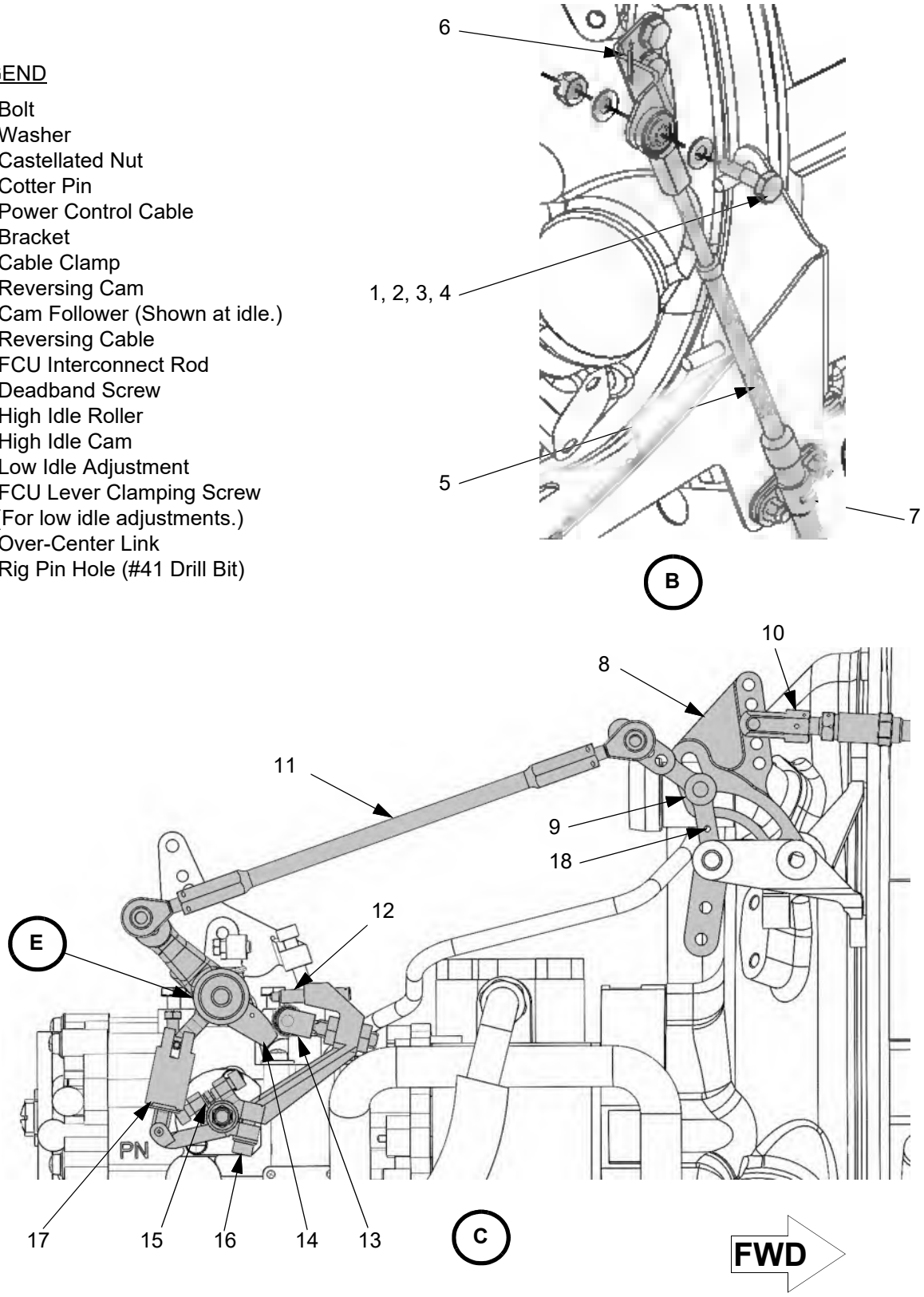

Figure 76-10.2: Power Control Cable (Sheet 3 of 3)

LEGEND

1. FCU Power Lever
2. Max Forward Ng Stop
3. Max Reverse Ng Stop
4. Deadband Screw
5. Deadband Stop
6. Serrated washer
7. High idle Adjustment
8. Low Idle Adjustment
9. Reversing Cable Clevis
10. Beta Arm
11. Guide pin
12. Beta Valve
13. Beta Valve Clevis

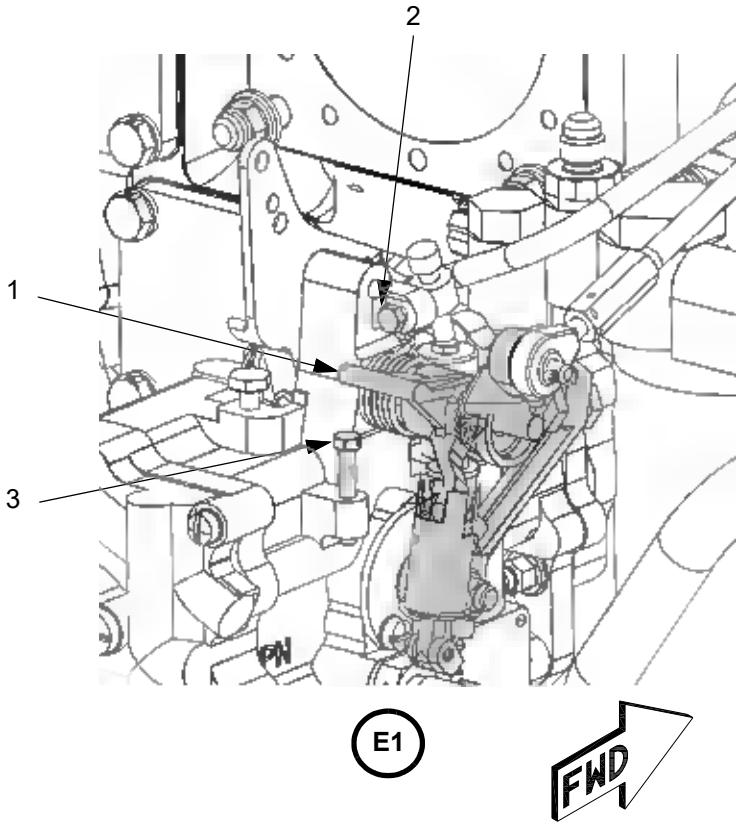

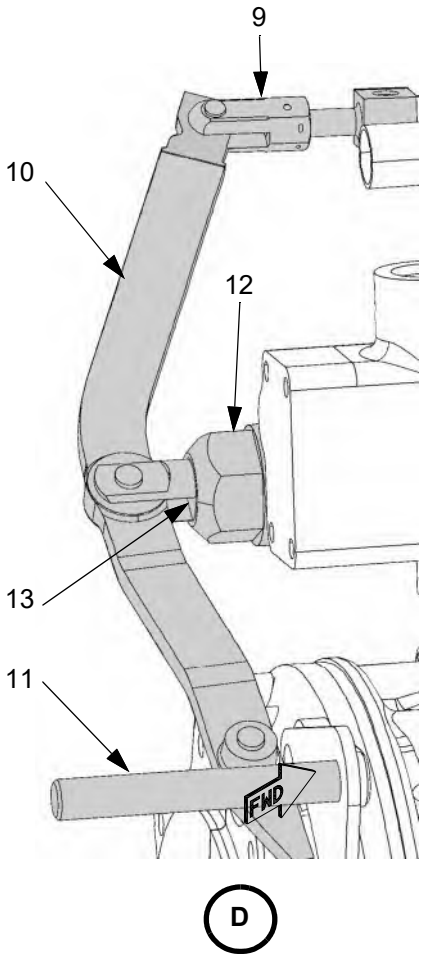

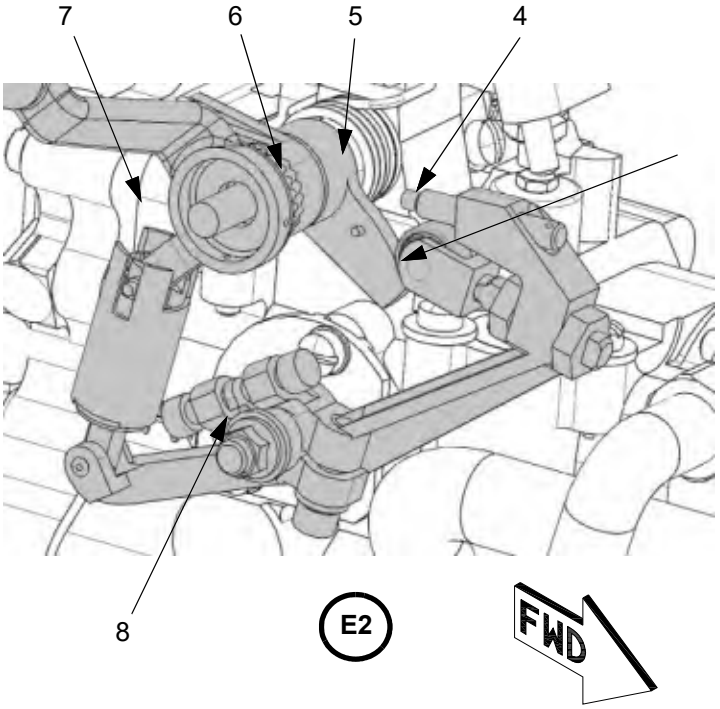

D. Propeller Control Cable

(1) Removal

(a) Remove the cowling (refer to Chapter 71-10).

(b) Remove the right intercooler (refer to Chapter 21-20).

(c) Remove the firewall blanket penetration panels (refer to Chapter 71-30).

(d) Remove the (4) screws that attach the propeller control and fuel condition handles to their respective levers. Remove the handles.

(e) Remove the (3) screws that attach the quadrant closeout panel and face panel to the power quadrant. Remove the closeout and face panel.

(f) Remove the cotter pin and washers that attach the propeller control cable to the propeller control lever in the quadrant.

(g) Remove the bolt and washer that attach the propeller control cable to the Propeller Governing Unit (PGU).

(h) Remove the rod ends from the cable.

Note: Make note of the rod end thread engagement on both cable ends for installation of the new cable.

Note: Replacement of the jam nut is recommended, the old jam nut may be discarded with the cable.

(i) Remove the cushioned clamps that attach the propeller control cable to the other cables, engine mount, and engine bracket.

(j) Remove the fire resistant sleeve from the propeller control cable.

(k) Remove the (4) nuts that attach the capture plate to the spherical bulkhead fitting. Remove the capture plate and spherical halves.

(l) Remove the cable.

(2) Installation

(a) Route the cable aft through the firewall bulkhead fitting. Do not install the bulkhead fitting at this time.

(b) Route the cable from the firewall to the propeller governor. Make sure cable routing criteria in 76-10.2.F(1)(g) are met.

(c) Install the rod ends with new AN315-3R jam nuts using the thread engagement noted on the old cable as a starting point. Do not torque or safety at this time.

(d) Temporarily attach the cable rod ends to the PGU and propeller control lever in the control quadrant.Do not torque or safety at this time.

CAUTION: Make sure the raised rib on the cable clamp aligns with the groove in the cable housing end cap. The cable may be damaged and not properly secured if the clamp/clamp bracket does not engage the end cap correctly. Refer to Figure 76-10.7, Sheet 6.

(e) Install the cable clamp that attaches the propeller cable to the engine bracket. Torque the nuts to 20 -25 in-lbs.

(f) Install the cable clamp that attaches the propeller cable to the quadrant arm. Torque the nuts to 20 -25 in-lbs.

(g) Install the cushioned clamps that attach the propeller cable to the other cables. Torque the nuts to 20 -25 in-lbs.

(h) Install the spherical halves and capture plate in the bulkhead fitting. Install the (4) nuts that attach the capture plate to the spherical bulkhead fitting. Torque the nuts to 12 - 15 in-lbs.

(i) Install the fire resistant sleeve on the propeller control cable between the upper forward engine cross bar and the forward cable clamp. Secure with high temp cable ties or 0.032” safety wire.

(j) Temporarily install the quadrant face panel and closeout panel on the power quadrant. Remove the panel as needed to make adjustments.

Note: This is to verify the propeller lever does not contact the trim panel in the FEATHER or MAX RPM positions preventing the stops on the PGU from being reached.

(k) Make sure the friction control is fully counter-clockwise.

(l) Put the cockpit propeller control lever in FEATHER and adjust the rod ends on the propeller control cable as needed so the feathering valve plunger is fully depressed and bottomed out in the PGU. Make sure the lever does not contact the trim panel.

(m) Put the cockpit propeller control lever in MAX RPM and adjust the rod ends on the propeller control cable as needed so light positive pressure is applied to the maximum RPM stop on the PGU. Make sure the lever does not contact the trim panel.

(n) If the propeller lever contacts the trim panel in either position, the stagger between the power lever and propeller lever is unacceptable, or the stops on the PGU are not being reached, the following adjustments are allowed:

- Adjust the length of the turnbuckle between the propeller lever and the propeller slave lever or the vertical position of the turnbuckle on the slave lever.
- Max rpm stop on the PGU. Tighten jam nut and install safety wire after final adjustment.
- Clocking position of the PGU lever on the PGU. Torque the screw to 26 -29 in-lbs and install safety wire after final adjustment.
- PGU feathering plunger length. Adjust the position of the bolt in the feathering plunger. A minimum of 0.285” of the bolt must be engaged in the feathering plunger. Torque the jam nut to 12 - 15 in-lbs after final adjustment.

Note: After making any adjustments, verify all other rigging criteria are still met.

(o) Make sure threads are visible in the rod end witness holes and the jam nuts are not bottoming on the cable housing at the PGU or in the quadrant.

(p) Apply Loctite 242 to both rod end jam nuts of the propeller control cable and torque the jam nuts to 20 - 25 in-lbs.

(q) Install the washers and cotter pin that attach the cable rod end to the propeller lever in the quadrant.

(r) Install the bolt and washer that attach the cable rod end to the PGU and torque the bolt to 20 - 25 in-lbs. Install 0.032” safety wire.

(s) Put the quadrant face panel and closeout panel in position and install the (3) screws that attach the panels to the power quadrant.

(t) Install the handles of each control lever. Use a small amount of Loctite 222 on the female threads of the levers. Torque the screws to 12 - 15 in-lbs.

(u) Install the firewall blanket penetration panels (refer to Chapter 71-30).

(v) Install the right intercooler (refer to Chapter 21-20).

(w) Install the cowling (refer to Chapter 71-10).

(x) With the cowling installed, move the cockpit prop lever from FEATHER to MAX RPM and verify that there is no interference between the top cowl and PGU lever with attached reversing cable throughout the entire travel.

(y) Do the Prop Linkage Static Check, Pre-Operational Check, Pre-Start Check, Engine Starting, Propeller RPM Max Check, Feathering Operation Check, and Engine Shutdown (refer to Chapter 71-00.4).

Figure 76-10.4: Propeller Cable

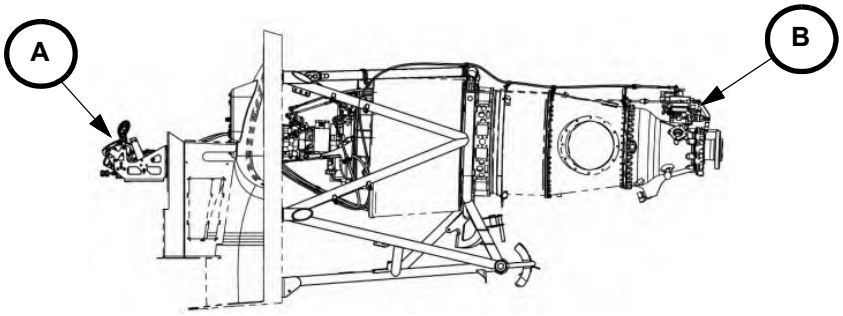

LEGEND

1. Propeller Control Cable
2. PGU
3. PGU Lever
4. Engine Bracket
5. Bolt
6. Washer
7. Locknut
8. Propeller Control Lever
9. Turnbuckle
10. Slave Lever

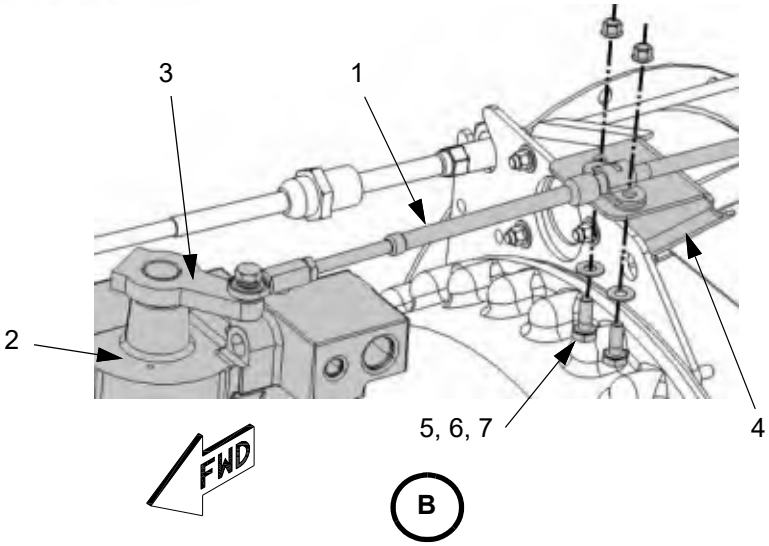

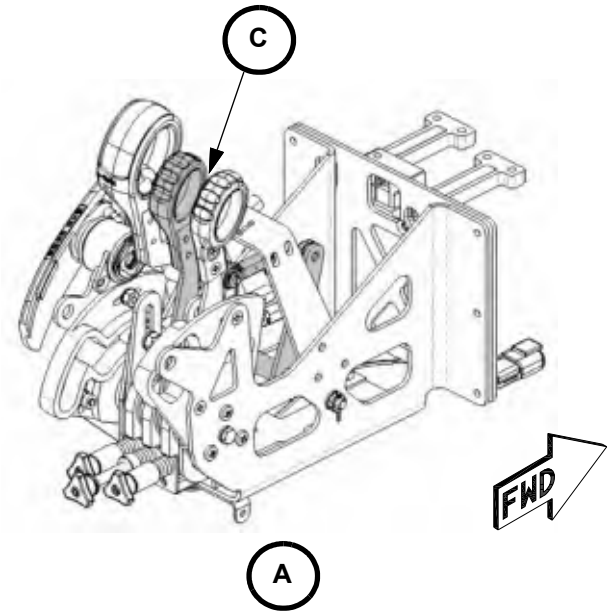

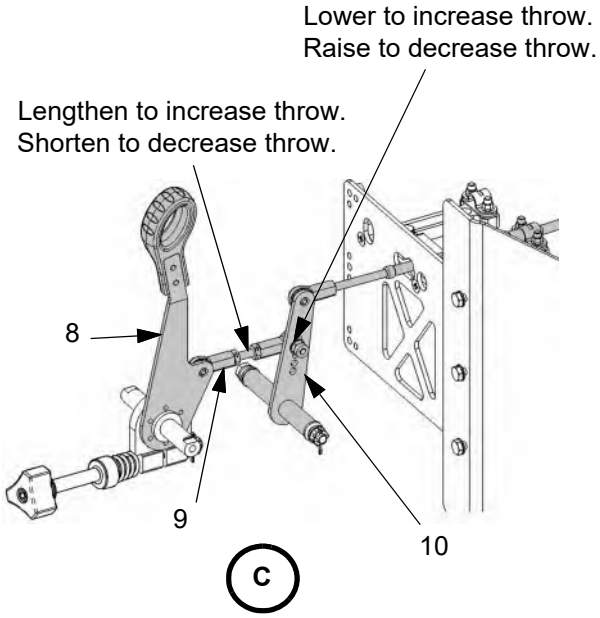

E. Fuel Condition Cable

(1) Removal

(a) Remove the cowling (refer to Chapter 71-10).

(b) Remove the right intercooler (refer to Chapter 21-20).

(c) Remove the firewall blanket penetration panels (refer to Chapter 71-30).

(d) Remove the (4) screws that attach the propeller control and fuel condition handles to their respective levers. Remove the handles.

(e) Remove the (3) screws that attach the quadrant closeout panel and face panel to the power quadrant. Remove the closeout and face panel.

(f) Remove the bolt, washers, and nut that attach the rod end of the fuel condition cable to the fuel condition lever. Make note the hole the cable is mounted in on the lever.

(g) Remove the bolt, washers, spacer, nut, and cotter pin that attach the rod end of the fuel condition cable to the fuel condition lever on the FCU. Make note the hole the cable is mounted in on the FCU fuel condition lever.

(h) Remove the rod ends from the cable.

Note: Make note of the rod end thread engagement on both cable ends for installation of the new cable.

Note: Replacement of the jam nut is recommended, the old jam nut may be discarded with the cable.

(i) Remove the cable clamp that attaches the power cable to the engine bracket. Note the position of the clamp on the engine bracket.

(j) Remove the cable clamp bracket that attaches the power and condition cables to the quadrant.

(k) Remove the cushioned clamps that attach the power control cable to the other cables.

(l) Remove the (4) nuts that attach the capture plate to the spherical bulkhead fitting. Remove the capture plate and spherical halves.

(m) Remove the cable.

(2) Installation

(a) Route the cable through the bulkhead fitting. Do not install the bulkhead fitting at this time.

(b) Route the cable from the firewall to the FCU. Make sure cable routing criteria in 76-10.2.F(1)(g) are met.

(c) Install the rod ends with new AN315-3R jam nuts using the thread engagement noted on the old cable as a starting point. Do not torque or safety at this time.

(d) Temporarily attach the cable rod ends to the fuel condition lever on the FCU and to the fuel condition lever in the quadrant. Do not torque or safety at this time.

CAUTION: Make sure the raised rib on the cable clamp and cable clamp bracket align with the groove in the cable housing end cap. The cable may be damaged and not properly secured if the clamp/clamp bracket does not engage the end cap correctly. Refer to Figure 76-10.7, Sheet 6.

(e) Install the cable clamp that attaches the condition cable to the engine bracket in the position noted at removal. Torque the nuts to 20 -25 in-lbs.

(f) Install the cable clamp bracket that attaches the power cable and condition cable to the quadrant. Torque the nuts to 20 -25 in-lbs.

(g) Install the cushioned clamps that attach the condition cable to the other cables. Torque the nuts to 20 -25 in-lbs.

(h) Install the spherical halves and capture plate in the bulkhead fitting. Install the (4) nuts that attach the capture plate to the spherical bulkhead fitting. Torque the nuts to 12 - 15 in-lbs.

(i) Make sure the friction control is fully counter-clockwise.

(j) Put the cockpit fuel condition lever in the LOW idle position.

Note: After making adjustments for each lever position, verify all other rigging criteria are still met.

(k) Remove backlash and set the quadrant gate position as follows:

(i) Loosen the adjusting screws on the power lever quadrant gate.

(ii) While holding the condition lever against the idle stop on the quadrant gate, move the condition lever and quadrant gate forward until the high idle stop on the FCU is contacted.

(iii) Slowly move the condition lever and quadrant gate aft until the rig pin in the FCU condition lever rigging slot and the FCU body rigging hole align. Install a 3/16” drill bit in the rigging holes.

(iv) Make sure the condition lever gate in the quadrant does not move and torque the gate adjusting screws to 20 -25 in-lbs.

(v) Remove the 3/16” drill bit from the rigging holes.

(l) Temporarily install the quadrant face panel and closeout panel on the power quadrant. Remove the panel as needed to make adjustments.

Note: This is to verify the condition lever does not contact the trim panel in the FUEL CUT-OFF or HIGH idle positions preventing the stops on the FCU from being reached.

(m) Put the cockpit fuel condition lever in the FUEL CUT-OFF position. Adjust the rod ends on the fuel condition cable as needed so light positive pressure is applied to the cut-off stop on the FCU. Make sure the fuel cut-off valve is fully depressed and quadrant lever does not contact the trim panel.

Note: Do not adjust the cut-off screw on the FCU condition lever or the cut-off stop on the FCU.

(n) Put the cockpit fuel condition lever in the HIGH idle position. Adjust the rod ends on the fuel condition cable as needed so light positive pressure is applied to the high idle stop on the FCU. Make sure the lever does not contact the trim panel.

(o) If the condition lever contacts the trim panel HIGH idle or FUEL CUT-OFF or is not contacting the stops on the FCU adjust the cable length and repeat steps (i)-(n).

(p) Make sure threads are visible in the rod end witness holes and the jam nuts are not bottoming on the cable housing at the FCU or in the quadrant.

(q) Install the bolt, washers, and nut that attach the rod end to the condition lever in the quadrant. Torque the nut to 20 - 25 in-lbs.

(r) Install the bolt, spacer, washers, and nut that attach the rod end to the condition lever on the FCU. Torque the nut to 20 - 25 in-lbs and install the cotter pin.

(s) Apply Loctite 242 to both rod end jam nuts of the fuel condition cable and torque the jam nuts to 20 - 25 in-lbs.

(t) Put the quadrant face panel and closeout panel in position and install the (3) screws that attach the panels to the power quadrant.

(u) Install the handles of each control lever. Use a small amount of Loctite 222 on the female threads of the levers. Torque the screws to 12 - 15 in-lbs.

(v) Install the firewall blanket penetration panels (refer to Chapter 71-30).

(w) Install the right intercooler (refer to Chapter 21-20).

(x) Install the cowling (refer to Chapter 71-10).

(y) Do the Fuel Condition Linkage Static Check, Engine Starting, Low “Ground” Idle Ng Limits Check, High Idle Ng Limits Check, and Engine Shutdown (refer to Chapter 71-00).

(i) Allowed adjustments:

- •High idle stop. Adjusting this may require adjustment of the high idle cam follower.
- •High idle cam follower. Adjust in accordance with 71-00-00 of the latest revision of Pratt & Whitney Maintenance Manual Turboprop Gas Turbine Engine 3036132.
- •Low (ground) idle adjusting screws. Adjust in accordance with 71-00-00 of the latest revision of Pratt & Whitney Maintenance Manual Turboprop Gas Turbine Engine 3036132. Check and adjust high idle as needed after adjusting low idle.

Figure 76-10.5: Fuel Condition Cable (Sheet 1 of 2)

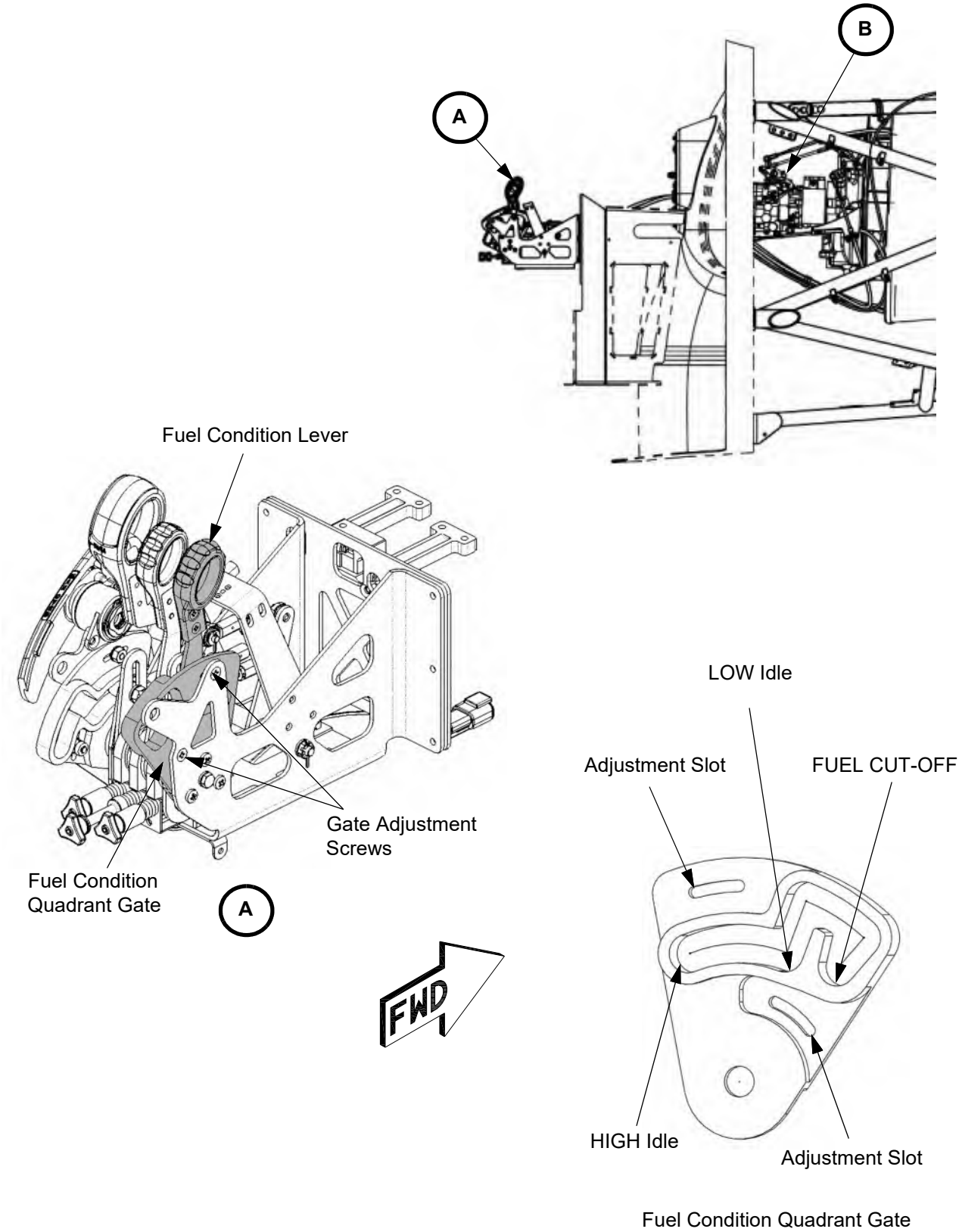

Figure 76-10.4: Fuel Condition Cable (Sheet 2 of 2)

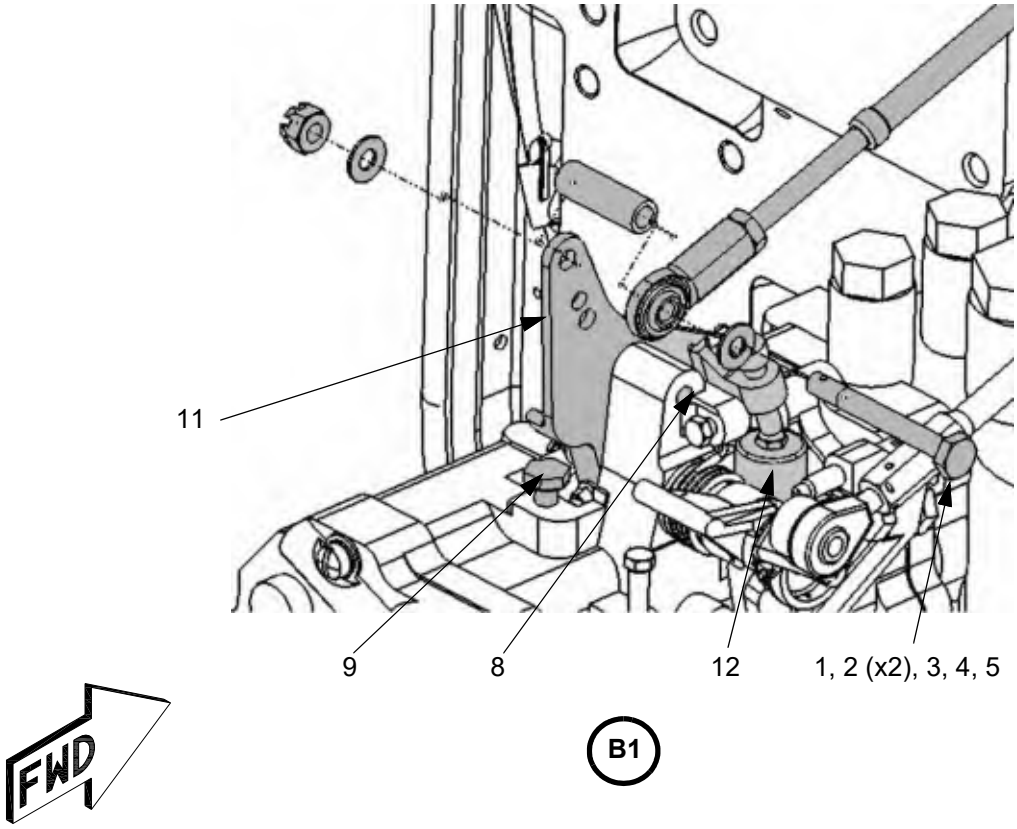

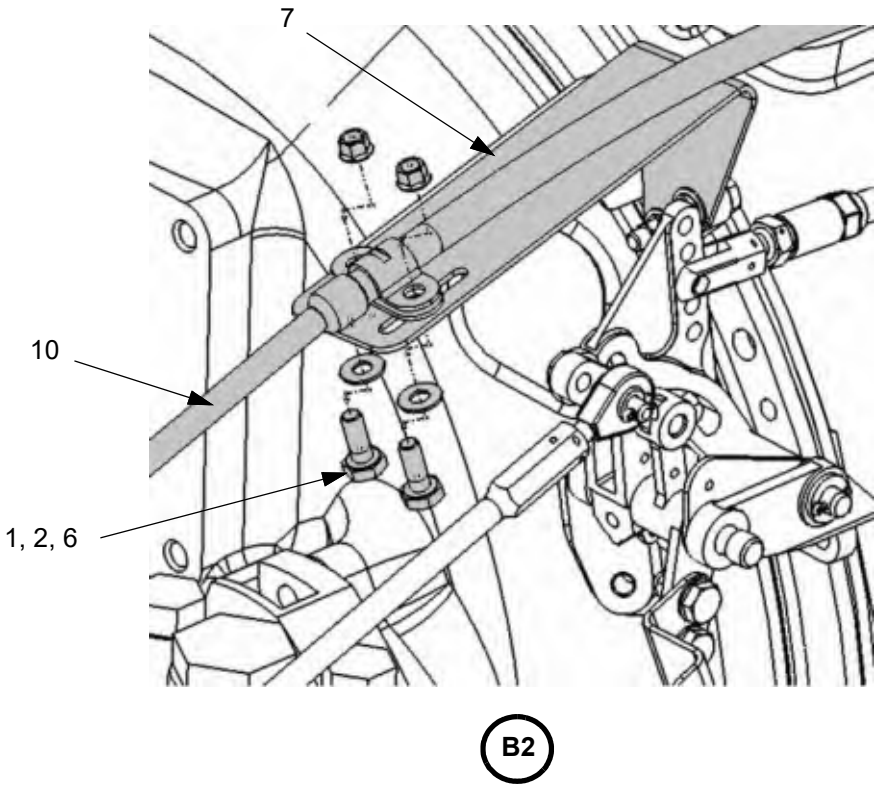

LEGEND

1. Bolt
2. Washer
3. Castellated Nut
4. Cotter Pin
5. Spacer
6. Locknut
7. Engine Bracket
8. Rig Pin Hole (3/16”)
9. High Idle Stop
10. Fuel Condition Cable
11. FCU Condition Lever
12. Fuel Cut-Off Valve

F. Fuel Condition Unit (FCU) Manual Override (MOR) Cable

(1) Removal

(a) Remove the cowling (refer to Chapter 71-10).

(b) Remove the right intercooler (refer to Chapter 21-20).

(c) Remove the firewall blanket penetration panels (refer to Chapter 71-30).

(d) Remove the (4) screws that attach the propeller control and fuel condition handles to their respective levers. Remove the handles.

(e) Remove the (3) screws that attach the quadrant closeout panel and face panel to the power quadrant. Remove the closeout and face panel.

(f) Remove the bolt, washers, and nut that attach the rod end of the MOR cable to the manual override bellcrank in the quadrant.

(g) Remove the bolt, washers, nut, and cotter pin that attach the rod end of the MOR cable to the manual override lever on the FCU.

(h) Remove the cable clamps that attaches the MOR cable to the quadrant arm and engine bracket. Note the position of the clamp on the engine bracket.

(i) Remove the cushioned clamps that attach the MOR cable to the other cables.

(j) Remove the (4) nuts that attach the capture plate to the spherical bulkhead fitting. Remove the capture plate and spherical halves.

(k) Remove the cable.

(2) Installation

(a) Route the cable through the bulkhead fitting. Do not install the bulkhead fitting at this time.

(b) Route the cable from the firewall to the FCU. Make sure cable routing criteria in 76-10.2.F(1)(g) are met.

(c) Temporarily attach the cable rod ends to the manual override lever on the engine and to the manual override bellcrank in the control quadrant. Do not torque or safety at this time.

CAUTION: Make sure the raised rib on the cable clamps align with the groove in the cable housing end caps. The cable may be damaged and not properly secured if the clamp does not engage the end cap correctly. Refer to Figure 76-10.7, Sheet 6.

(d) Install the cable clamp that attaches the MOR cable to the engine bracket in the position noted during removal. Torque the nuts to 20 -25 in-lbs.

(e) Install the cable clamp that attaches the MOR cable to the quadrant arm. Torque the nuts to 20 -25 in-lbs.

(f) Install the cushioned clamps that attach the MOR cable to the other cables. Torque the nuts to 20 -25 in-lbs.

(g) Install the spherical halves and capture plate in the bulkhead fitting. Install the (4) nuts that attach the capture plate to the spherical bulkhead fitting. Torque the nuts to 12 - 15 in-lbs.

CAUTION: Make sure the MOR lever on the FCU is against the normal stop (off) when the manual override lever is in its stowed and locked position. An incorrectly adjusted manual override lever could result in a potential engine fire on start or a hot start, requiring a complete engine overhaul.

Note: After making an adjustment, make sure all other rigging criteria are still met.

(h) Put the cockpit MOR lever in the mid-travel position and verify the following:

(i) The MOR lever on the FCU should be approximately perpendicular to the cable axis.

(ii) The MOR lever arm should be approximately 90° to the MOR lever.

(iii) The MOR lever arm on the FCU should be at the approximate mid point between the normal and maximum override stops.

(i) Put the cockpit MOR lever in the stowed position. Adjust the rod ends on the MOR cable as needed so the MOR arm has light positive pressure on the normal stop on the FCU.

(j) Deploy and advance the cockpit MOR lever fully forward. Adjust the rod ends on the MOR cable as needed so the MOR arm has light positive pressure on the maximum override stop on the FCU.

(k) Make sure threads are visible in the rod end witness holes and the jam nuts are not bottoming on the cable housing at the FCU or in the quadrant.

Note: There should be slight resistance to movement of the MOR control lever in the control quadrant.

(l) If positive pressure on both stops can not be achieved by adjusting the cable rod ends, the following adjustments are allowed:

CAUTION: Adjustment of the normal and maximum override stops on the FCU is NOT allowed.

(i) The upper or lower hole in the MOR lever on the FCU can be used.
(ii) The upper or lower hole in the manual override bellcrank in the pedestal an be used.
(iii) The relative angle between the MOR lever and the MOR lever arm can be adjusted by changing the position of the serrated washer. Once the final adjustment has been done, torque the nut to 30 - 40 in-lbs and install 0.032" safety wire.

Note: Make a mark across the lever, serrated washer, and FCU with a marker. This line will aid in tracking adjustments.

Note: Rotating the serrated washer with the lever gives a coarse adjustment. Rotating the washer between the lever and FCU gives a fine adjustment.

(m) Install the bolt, washers, and nut that attach the MOR cable rod end to the overrride arm on the FCU. Torque the nut to 20 - 25 in-lbs and install the cotter pin.
(n) Install the bolt, washers, and nut that attach the MOR cable rod end to the manual override bellcrank in the quadrant. Torque the nut to 20 - 25 in-lbs.
(o) Apply Loctite 242 to both rod end jam nuts on the FCU MOR cable and torque the jam nuts to 20 - 25 in-lbs.
(p) Put the quadrant face panel and closeout panel in position and install the (3) screws that attach the panels to the power quadrant.
(q) Install the handles of each control lever. Use a small amount of Loctite 222 on the female threads of the levers. Torque the screws to 12 - 15 in-lbs.
(r) Install the firewall blanket penetration panels (refer to Chapter 71-30).
(s) Install the right intercooler (refer to Chapter 21-20).
(t) Install the cowling (refer to Chapter 71-10).
(u) Do the Manual Override System Static Check, Pre-Operational Check, Pre-Start Check, Engine Starting, Manual Override System Operational Check, and Engine Shutdown (refer to Chapter 71-00).

Figure 76-10.6: FCU MOR Cable (Sheet 1 of 2)

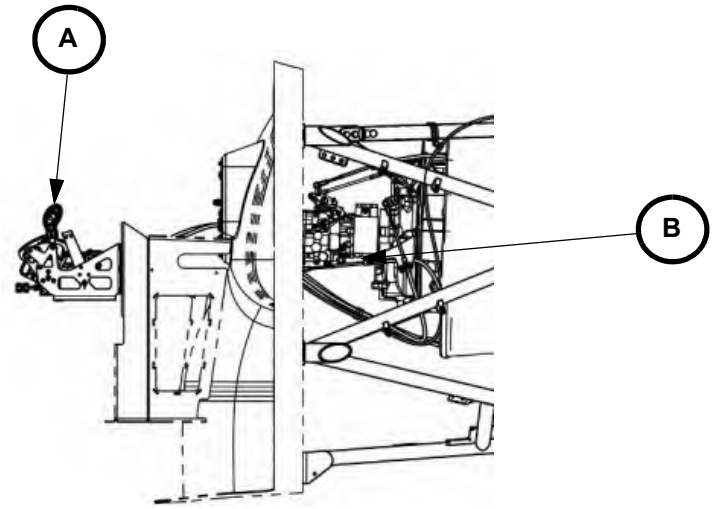

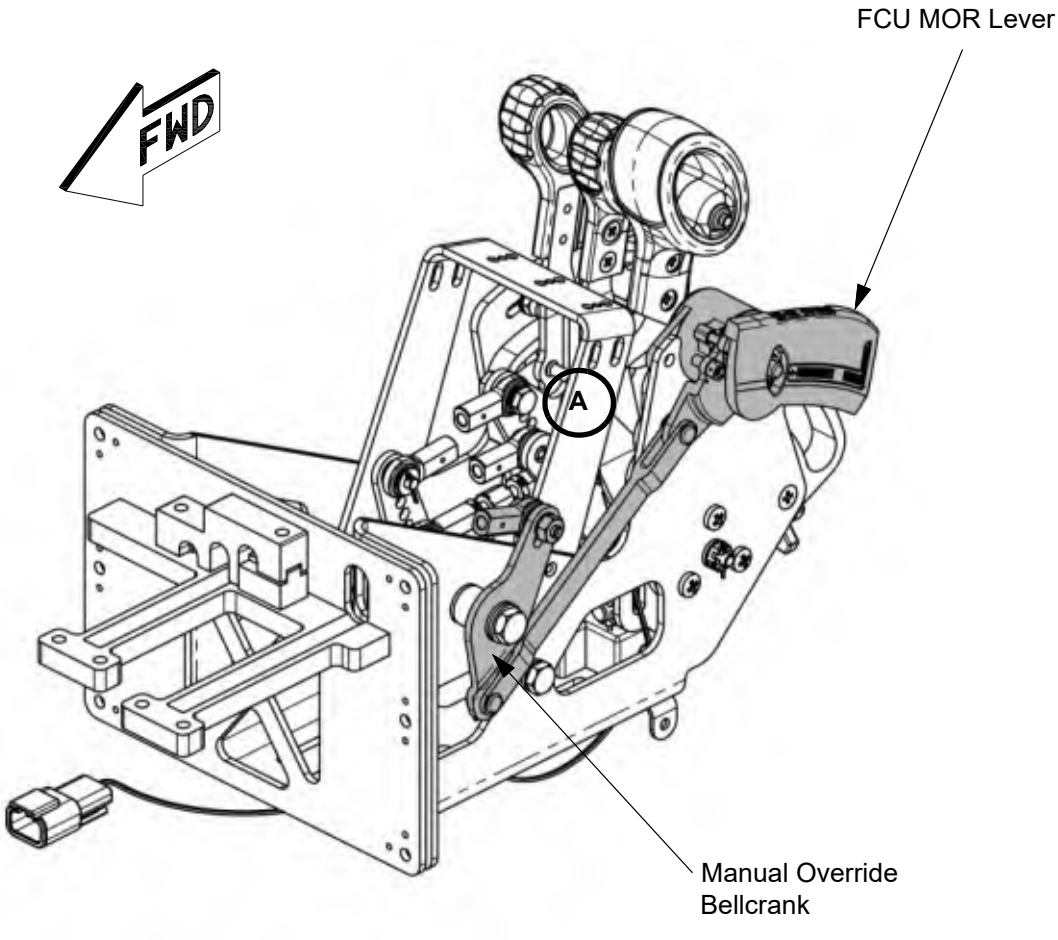

Figure 76-10.6: FCU MOR Cable (Sheet 2 of 2)

LEGEND

1. Bolt
2. Washer
3. Castellated Nut
4. Cotter Pin
5. Locknut
6. Engine Bracket

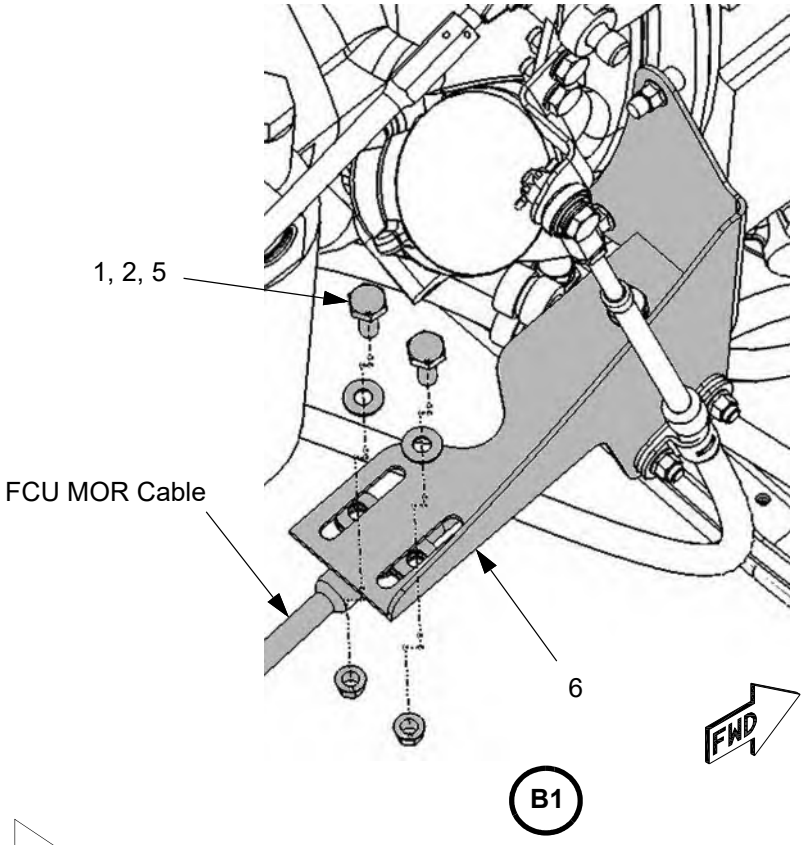

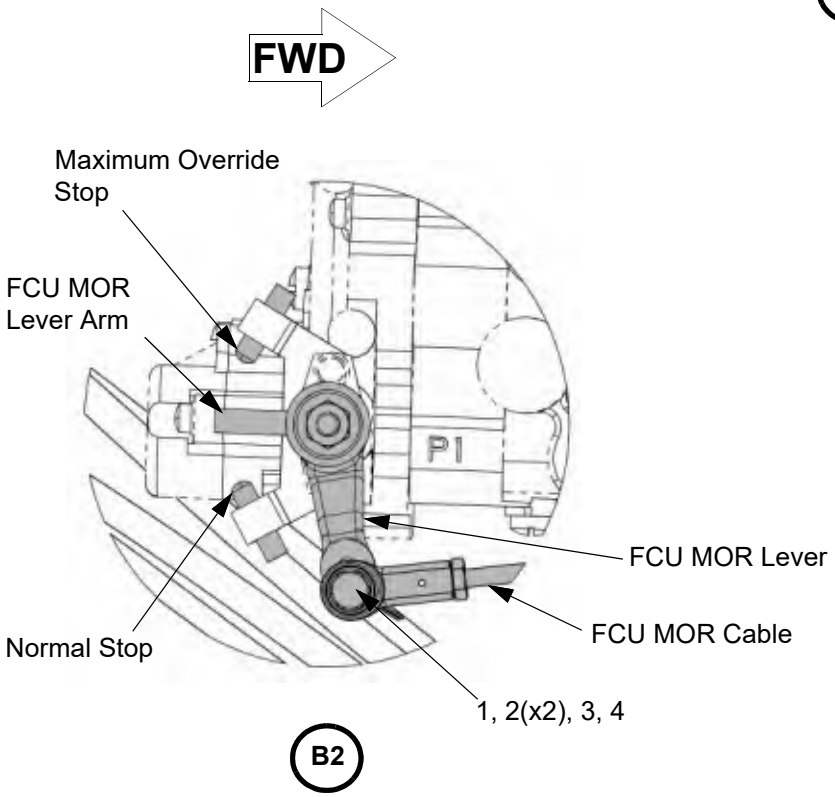

Figure 76-10.7: Engine Control Cables (Sheet 1 of 6)

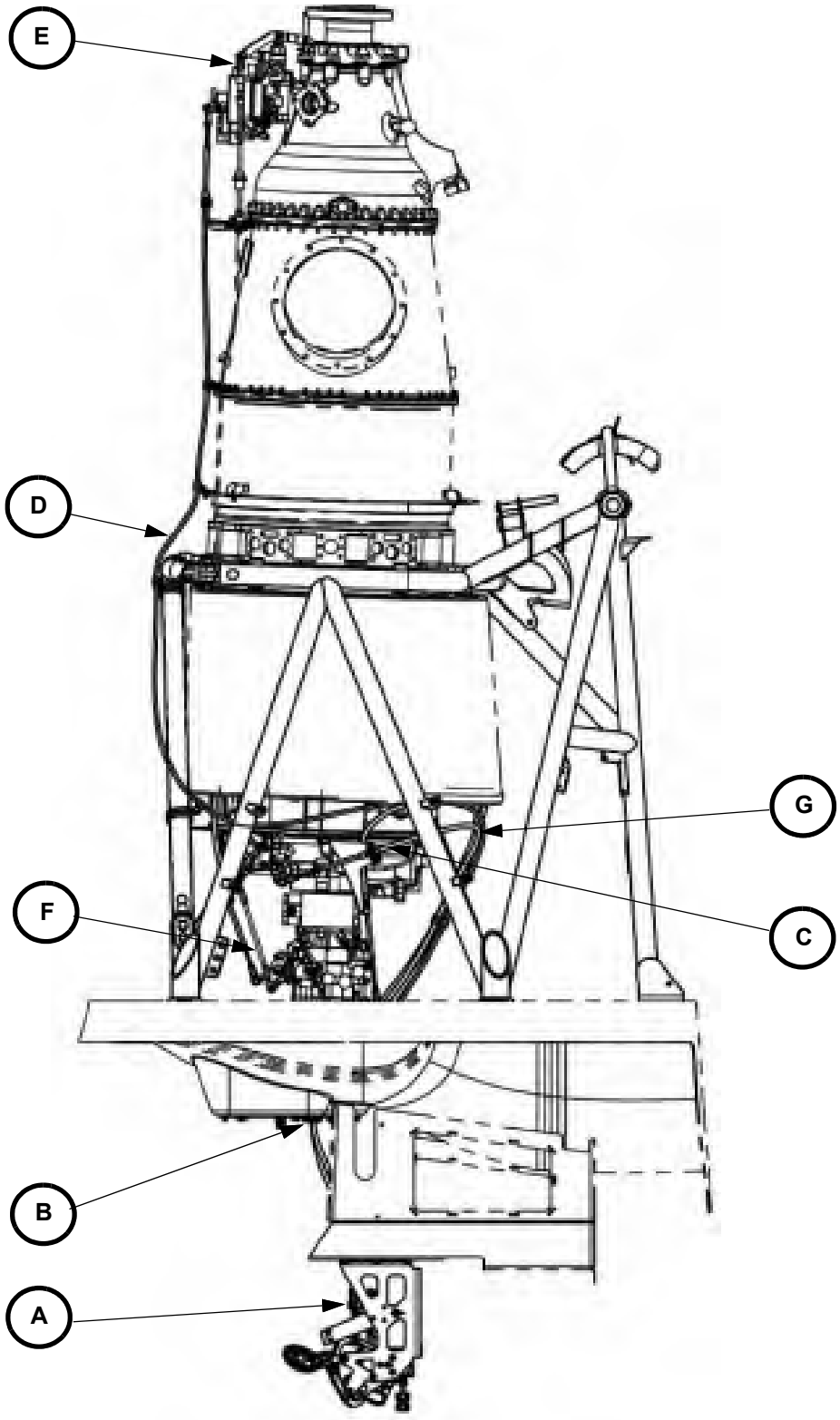

Figure 76-10.7: Engine Control Cables (Sheet 2 of 6)

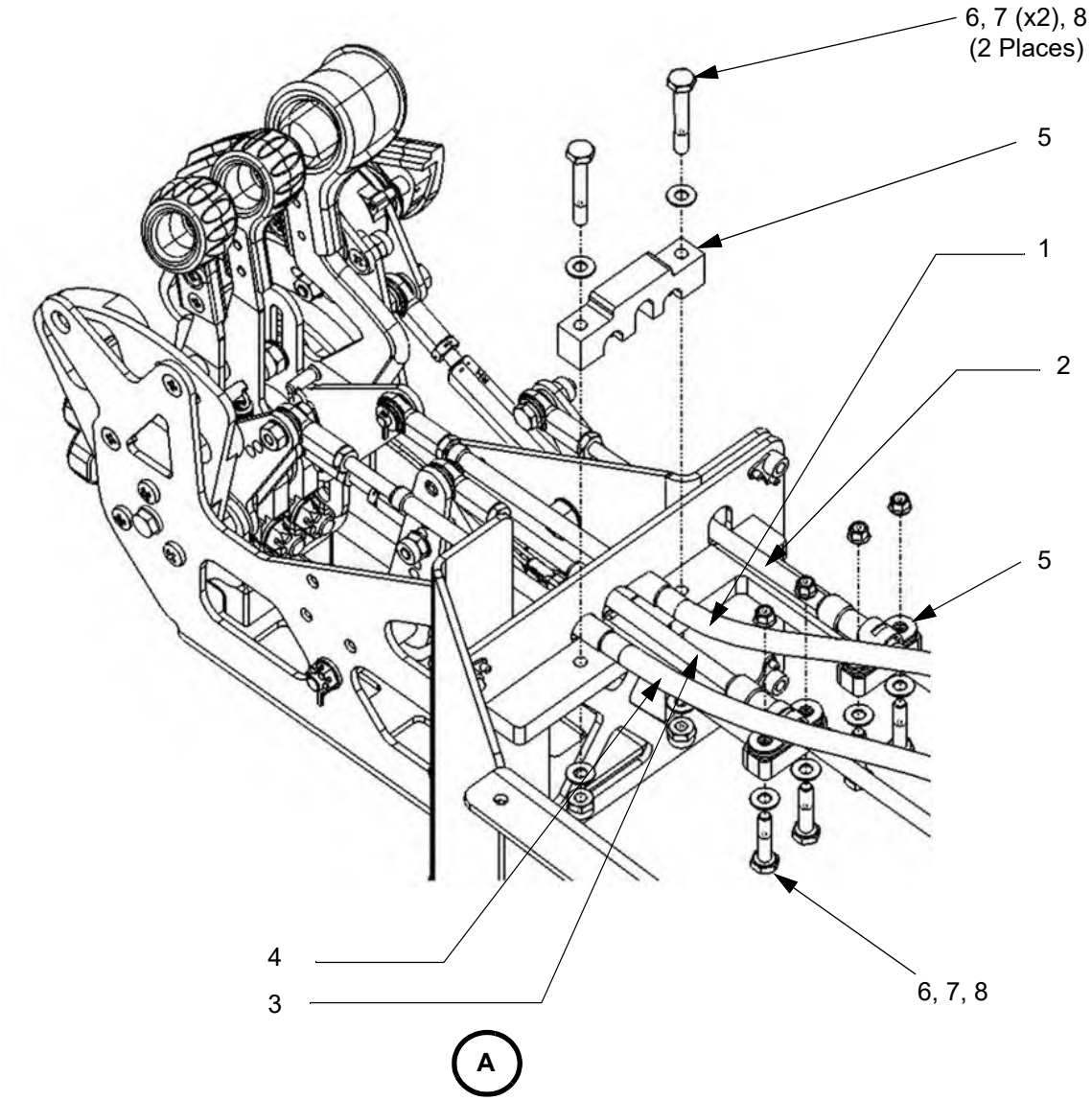

LEGEND

1. Power Control Cable
2. Manual Fuel Override Cable
3. Fuel Condition Control Cable
4. Propeller Control Cable
5. Cable Clamp
6. Bolt
7. Washer
8. Locknut

Figure 76-10.7: Engine Control Cables (Sheet 3 of 6)

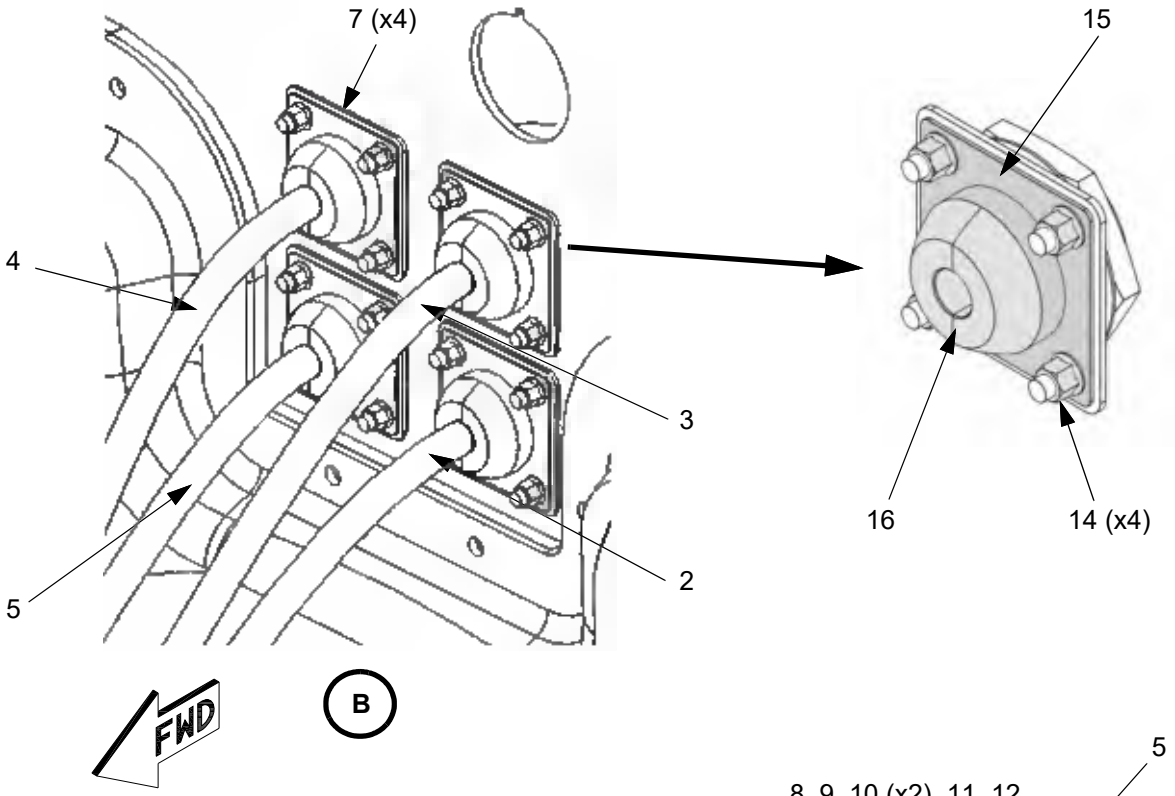

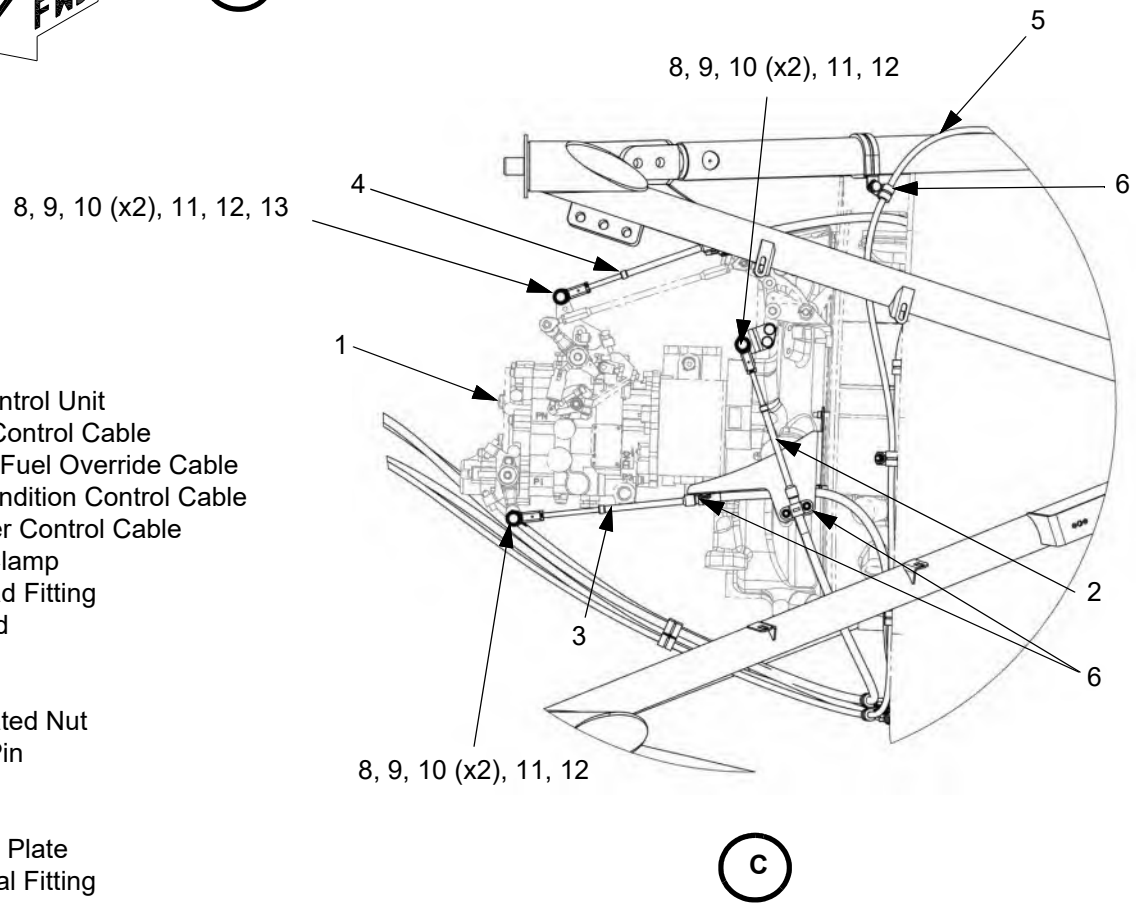

LEGEND

1. Fuel Control Unit
2. Power Control Cable
3. Manual Fuel Override Cable
4. Fuel Condition Control Cable
5. Propeller Control Cable
6. Cable Clamp
7. Bulkhead Fitting
8. Rod End
9. Bolt
10. Washer
11. Castellated Nut
12. Cotter Pin
13. Spacer
14. Locknut
15. Capture Plate
16. Spherical Fitting

Figure 76-10.7: Engine Control Cables (Sheet 4 of 6)

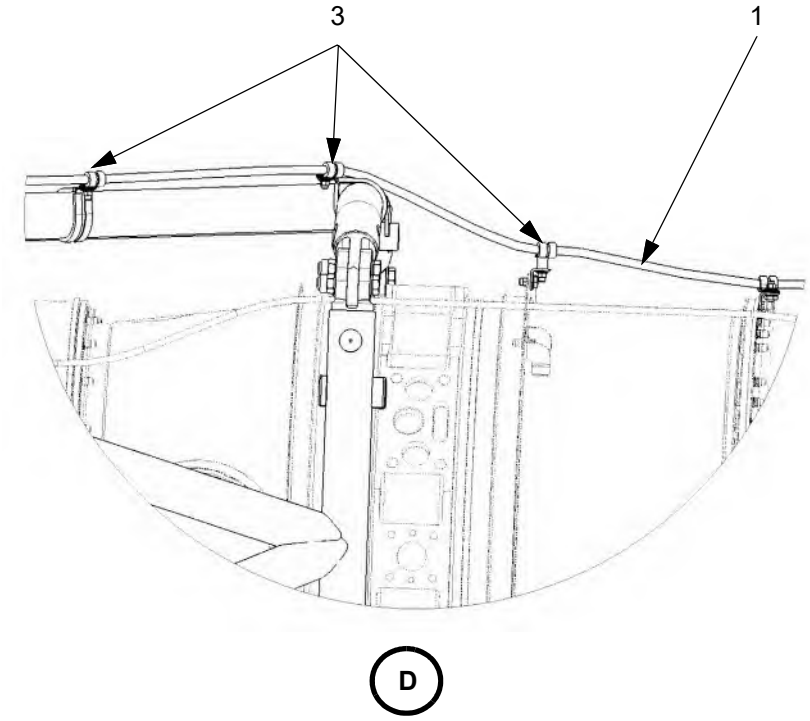

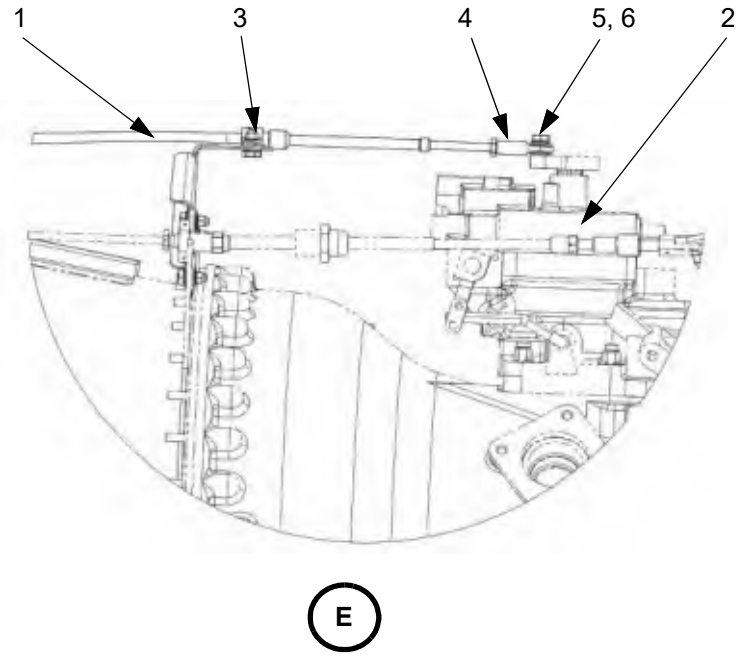

LEGEND

1. Propeller Control Cable
2. Propeller Governor
3. Clamp
4. Rod End
5. Bolt
6. Washer

Figure 76-10.7: Engine Control Cables (Figure 5 of 6)

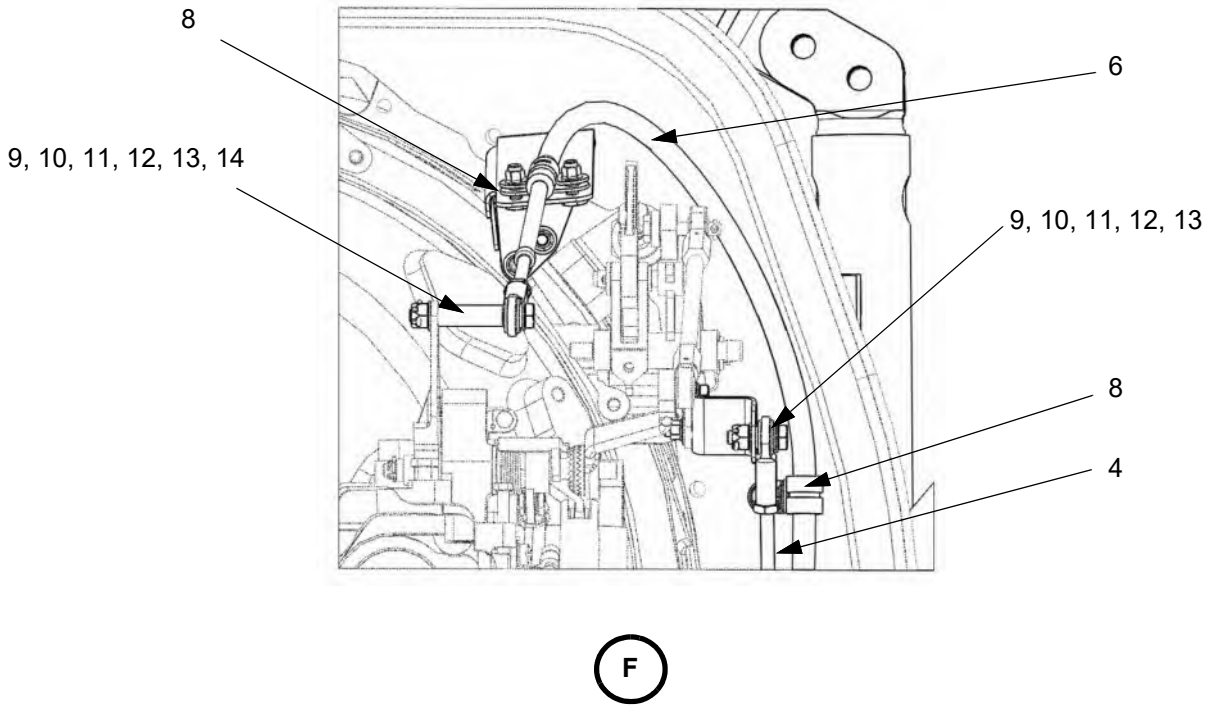

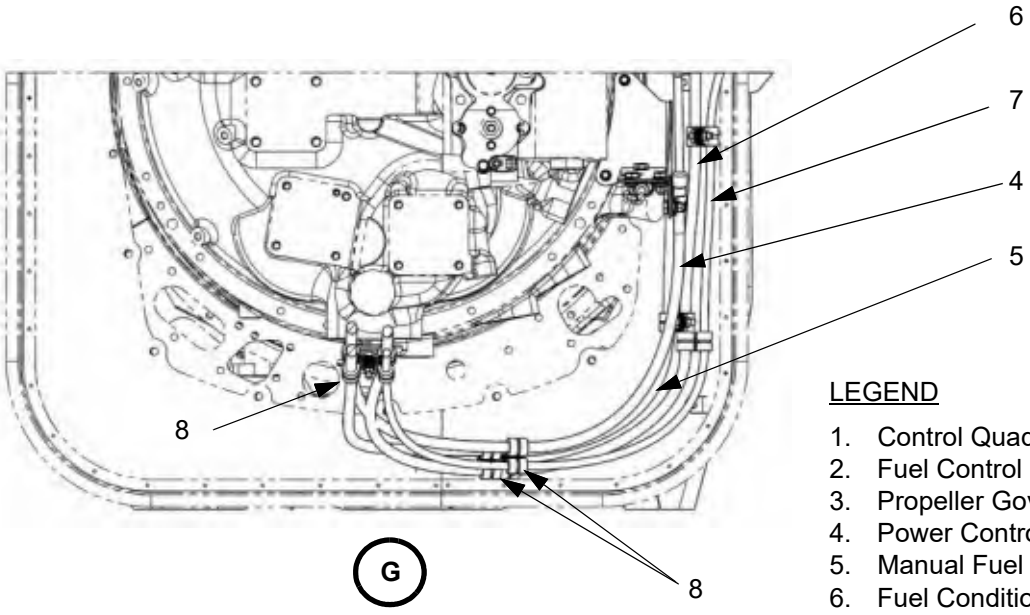

LEGEND

1. Control Quadrant
2. Fuel Control Unit
3. Propeller Governor
4. Power Control Cable
5. Manual Fuel Override Cable
6. Fuel Condition Control Cable
7. Propeller Control Cable
8. Cable Clamp
9. Bolt
10. Washer
11. Castellated Nut
12. Cotter Pin
13. Rod End
14. Spacer

Figure 76-10.7: Engine Control Cables (Figure 6 of 6)

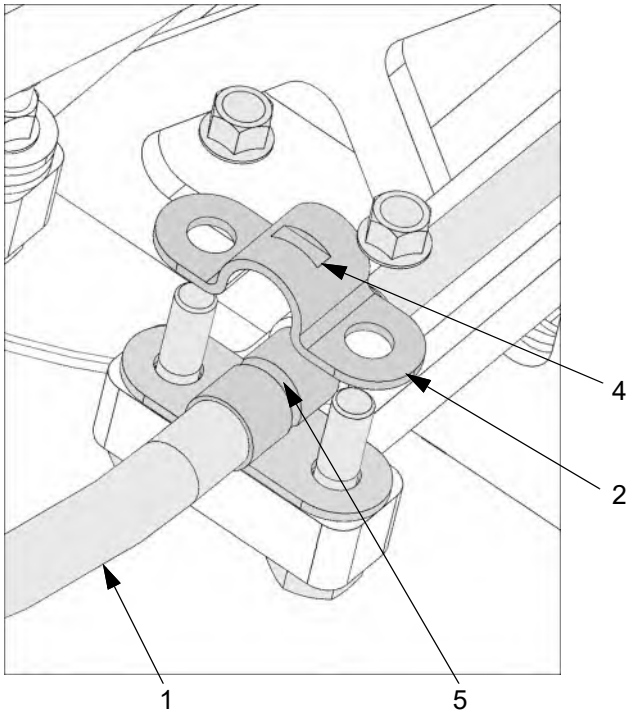

FCU MOR and
Propeller Lever (Typ.)

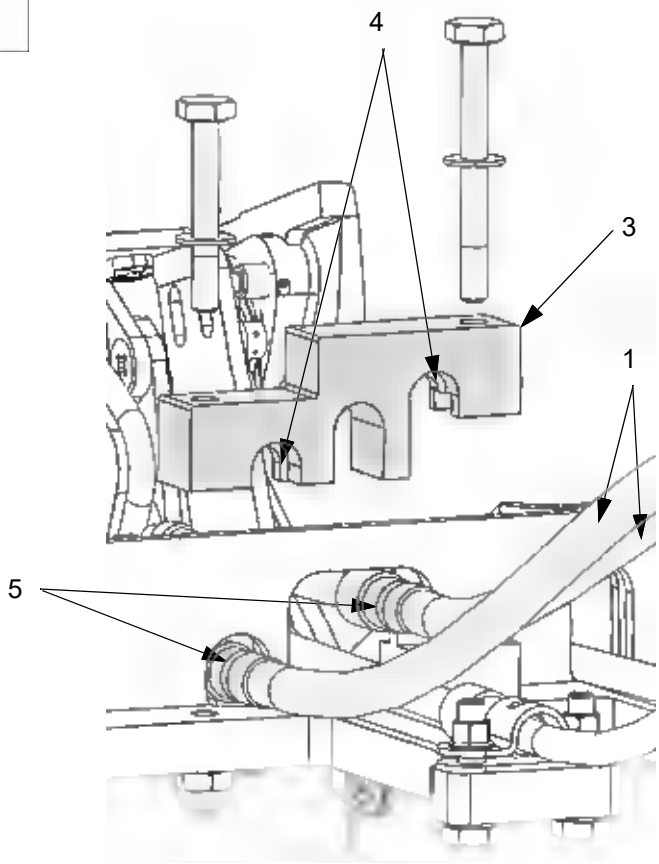

Power and Condition Levers

LEGEND

15. Cable
16. Clamp
17. Clamp Bracket
18. Raised Rib
19. Cable End Cap Groove

G. Control Cable Inspection

(1) Inspection

(a) Remove the cowling (refer to Chapter 71-10).

(b) Verify rigging of the control levers is correct.

(c) Verify there is no corrosion, checking, flat spots or other damage on the cables.

(d) Verify the cable housings are free of chafing and other damage.

(e) Verify there is no corrosion or damage on the rod ends and the bearings move freely.

(f) Install the cowling (refer to Chapter 71-10).

(g) Control Cable Requirements:

Minimum Bend Radius:
Minimum bend radius for all control cables from the control quadrant to the engine is 3".

Maximum Slack:
The distance between anchor points of the cables to the airplane is 18" (+6", -17").

Clearance:
Ensure all cables are installed a minimum of 3/4" from objects in motion.

Chafing:
Route all control cables to prevent chafing or rubbing of the cable housing. If contact with the cable housing can not be prevented, wrap the contact area of the cable housing with AS33671-2 silicone sheeting and use AMS3320 tie-wraps to secure the silicone sheeting.

Control Cable Rod End Swivel Angle:
The maximum range of the rod end swivel angle is 16°.

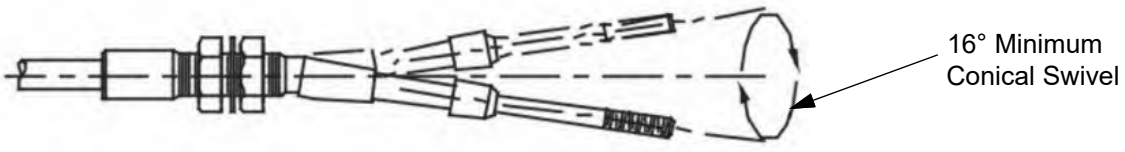

H. Beta Block

(1) Removal

(a) Set the BATT 1 and BATT 2 switches to OFF.

(b) Set the fuel selector to the “OFF” position.

(c) Disconnect external electrical power from the airplane (refer to Chapter 24-40).

(d) Remove the upper cowling (refer to Chapter 71-10).

(e) Disconnect the beta arm from the beta valve.

(f) Disconnect the beta arm from the reversing cable

(g) Remove the cotter pin, castellated nut, washer and spacer attaching the beta block to the beta arm and holding the beta block into the beta ring.

(h) Remove the cotter pin and clevis pin securing the beta block to its yoke then remove the beta block.

(2) Installation

(a) Insert the beta block into its yoke then secure it using a clevis pin and a new cotter pin.

(b) Attach the beta block to the beta arm using a spacer, washer, and castellated nut.

(c) Insert the beta block into the beta ring then attach the beta arm to the beta valve.

CAUTION: Fit the beta block into the beta ring with a minimum side clearance of 0.001 inch (0.03 mm) on both sides.

CAUTION: Ensure the beta arm is installed between the guide pin and the beta ring.

(d) Attach the beta arm to the cambox reversing cable.

(e) Install the cowling (refer to Chapter 71-10).

(3) Inspection

(a) Set the BATT 1 and BATT 2 switches to OFF.

(b) Set the fuel selector to the “OFF” position.

(c) Disconnect external electrical power from the airplane (refer to Chapter 24-40).

(d) Remove the upper cowling (refer to Chapter 71-10).

(e) Inspect the beta block and beta arm for condition and security.

(f) Inspect the beta ring for condition.

(g) Install the upper cowling (refer to Chapter 71-10).

Figure 76-10.8: Beta Block

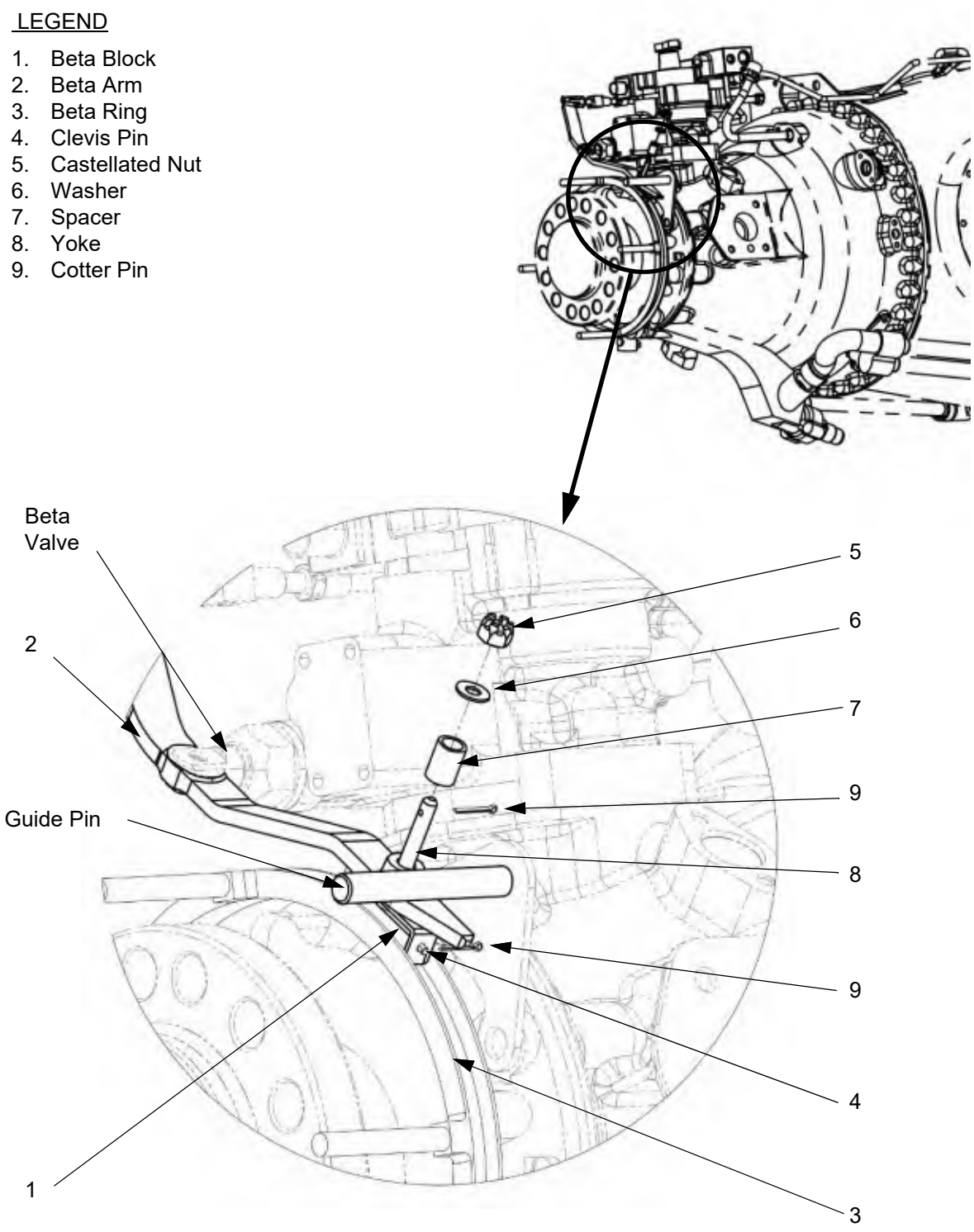

This Page Intentionally Left Blank

CHAPTER
77

Engine Indicating

This Page Intentionally Left Blank

List of Effective Pages

Chapter/Section	Page Number	Effective Date
77-Title	Page 1	02 Jan 2020
77-Title	Page 2	02 Jan 2020
77-LOEP	Page 1	10 Jul 2025
77-LOEP	Page 2	02 Jan 2020
77-TOC	Page 1	14 Jul 2021
77-TOC	Page 2	02 Jan 2020
77-00	Page 1	10 Jul 2025
77-00	Page 2	02 Jan 2020
77-40	Page 1	02 Jan 2020
77-40	Page 2	14 Jul 2021
77-40	Page 3	02 Jan 2020
77-40	Page 4	02 Jan 2020
77-40	Page 5	02 Jan 2020
77-40	Page 6	02 Jan 2020
77-40	Page 7	02 Jan 2020
77-40	Page 8	02 Jan 2020
77-40	Page 9	10 Jul 2025
77-40	Page 10	14 Jul 2021

This Page Intentionally Left Blank

Table of Contents

List of Effective Pages ..... 77-LOEP / Page 1
Table of Contents ..... 77-TOC / Page1

Paragraph **Page Number**

Engine Indication

1. General ..... 77-00 / Page 1

Integrated Engine Instrument System

1. Description ..... 77-40 / Page 1
2. Maintenance Practices ..... 77-40 / Page 1
   - A. GEA 71B Engine and Airframe Interface ..... 77-40 / Page 1
   - B. Tachometer Generator ..... 77-40 / Page 3
   - C. Tachometer Generator Adapter ..... 77-40 / Page 5
   - D. Differential Pressure Transducer ..... 77-40 / Page 7
   - E. Engine Chip Detector Operational Check ..... 77-40 / Page 9

This Page Intentionally Left Blank

ENGINE INDICATING

1. General

This section gives information on the components of the Garmin Integrated Cockpit System which receive the engine operating parameters for display to the pilot and copilot.

Two tachometer generators on the engine and a tachometer generator adapter behind the instrument panel give engine speed data to the Garmin Integrated Cockpit System through the Garmin GEA 71B.

The Garmin GEA 71B Engine and Airframe Interface is a micro-processor based input/output component used to monitor sensor inputs and drive annunciator outputs for aircraft airframe and engine systems that interfaces with the GIA 64Ws of the Garmin Integrated Cockpit system.

Refer to the current revision of the Garmin G1000 NXi Integrated Avionics System Line Maintenance Manual for the Epic E1000, P/N 190-02330-01 for component descriptions, signal types, and other pertinent information.

2. Troubleshooting

Refer to the current revision of the Garmin G1000 NXi Integrated Avionics System Line Maintenance Manual for the Epic E1000, P/N 190-02330-01.

K003-K085 (except K014), refer to the current revision of the E1000 Wiring Manual, P/N SK05000002.

K014, K086 and on, refer to the current revision of the E1000 AX Wiring Manual, P/N SK05003002.

This Page Intentionally Left Blank

INTEGRATED ENGINE INSTRUMENT SYSTEM

1. Description

This section gives information on the components of the Garmin Integrated Cockpit System which receive the engine operating parameters for display to the pilot and copilot.

The Garmin GEA 71B Engine and Airframe Interface is a micro-processor based input/output component used to monitor sensor inputs and drive annunciator outputs for aircraft airframe and engine systems that interfaces with the GIA 64Ws of the Garmin Integrated Cockpit system

2. Maintenance Practices

A. GEA 71B Engine and Airframe Interface

(1) Removal

(a) Remove the MFD (refer to Chapter 34-40).

(b) Unlock the GEA 71B handle by unscrewing the Phillips screw.

(c) Pull the handle outward to unlock the GEA 71B.

(d) Gently remove the GEA 71B from its rack.

(2) Installation

(a) Inspect the connector and pins for signs of damage. Repair any damage.

(b) Gently insert the GEA 71B into the rack. The unit can only be installed in one direction. The handle should engage the dogleg track.

CAUTION: Do not use excessive force when inserting the GEA 71B into the rack. This may cause damage to occur to the connectors, unit, and/or unit rack. If heavy resistance is felt during installation, stop! Remove the GEA 71B and identify the source of resistance. The rear plate is designed to float in the unit rack. Check to ensure the rear plate is not bound by the connector harness.

(c) Press inward on the handle to lock the unit into place.

(d) Lock the handle to the GEA 71B body using the Phillips screw.

CAUTION: Start the handle screw into the hole carefully to avoid cross-threading. Do not apply torque in excess of 14 in.-lbs. to the handle screw. The application of torque exceeding 14 in.-lbs. to this screw will damage the LRU case and/or retaining hardware.

(e) Install the MFD (refer to Chapter 34-40).

(f) Load software and configuration files and test the GEA 71B (refer to Section 6 and 7.9.1 of the current revision of the Garmin G1000 NXi Integrated Avionics System Line Maintenance Manual for the Epic E1000, P/N 190-02330-01).

Figure 77-40.1: , GEA 71B Engine and Airframe Interface

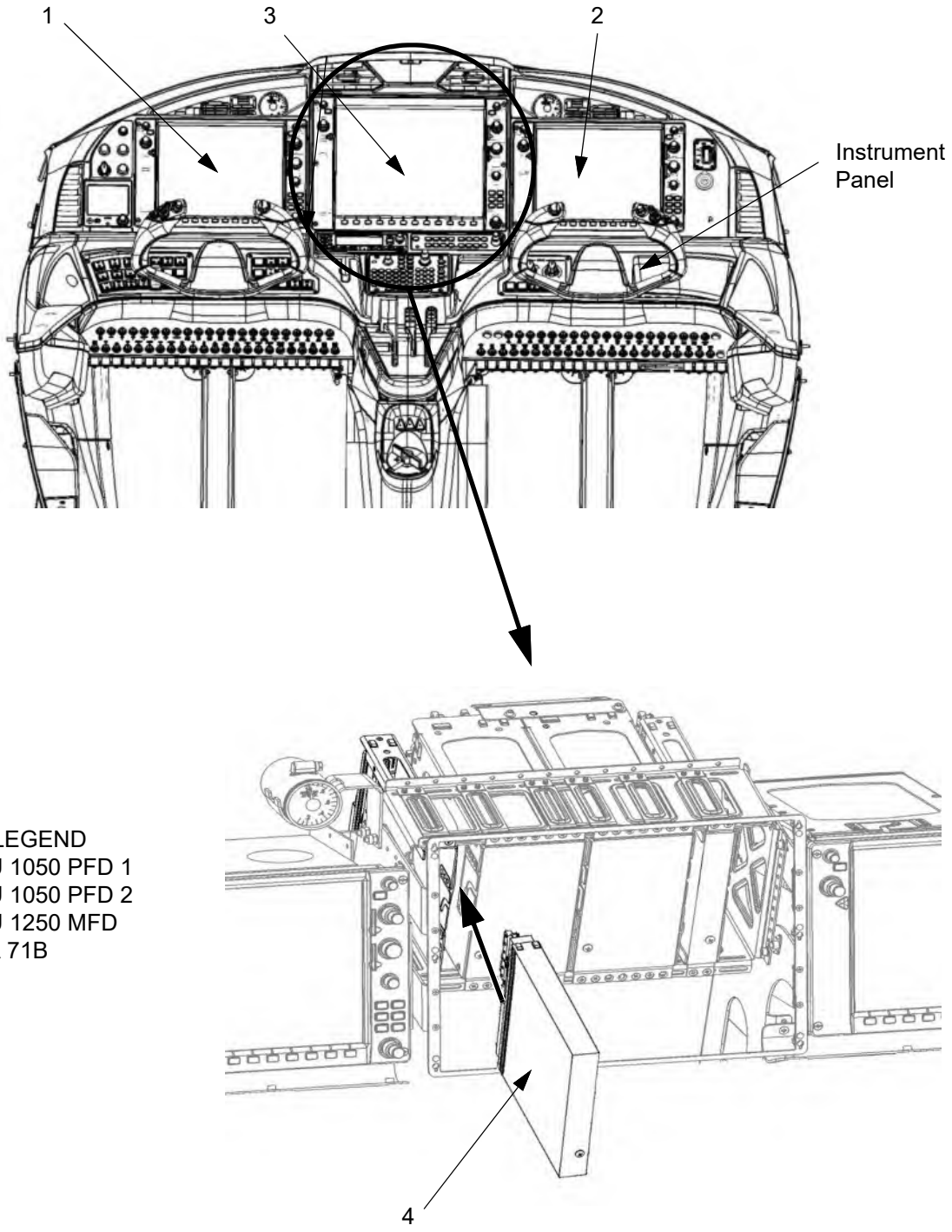

LEGEND

1. GDU 1050 PFD 1
2. GDU 1050 PFD 2
3. GDU 1250 MFD
4. GEA 71B

B. Tachometer Generator

There are two tachometer generators on the engine. One indicates the reduction gearbox RPM and the other indicates the accessory gearbox RPM. Removal and installation of the two tachometer generators is similar.

(1) Removal
- (a) Set the BATT 1 and BATT 2 switches to OFF.
- (b) Disconnect external electrical power from the airplane (refer to Chapter 24-40).
- (c) Remove the cowling (refer to Chapter 71-10).
- (d) Disconnect the wiring harness from the tachometer generator.
- (e) Remove the nuts and washers attaching the tachometer generator to the pad on the engine.
- (f) Note the orientation of the tachometer generator then remove it from the engine.
- (g) Remove the gasket between the tachometer generator and the pad.
- (h) Plug or cap the hole in the pad to keep out dirt or contamination.

(2) Installation
- (a) Uncap or unplug the hole in the accessory pad.
- (b) Install a new gasket onto the accessory pad.
- (c) Lubricate the splines on the tachometer generator using Plastilube #3 grease.
- (d) Orient the tachometer generator then slide it onto the studs of the pad.
- (e) Aline the splines on the tachometer generator shaft with the splines in the pad.
- (f) Secure the tachometer generator to the pad using washers and nuts.
- (g) Attach the wiring harness to the tachometer generator.
- (h) Install the cowling (refer to Chapter 71-10).

Figure 77-40.2: Tachometer Generators

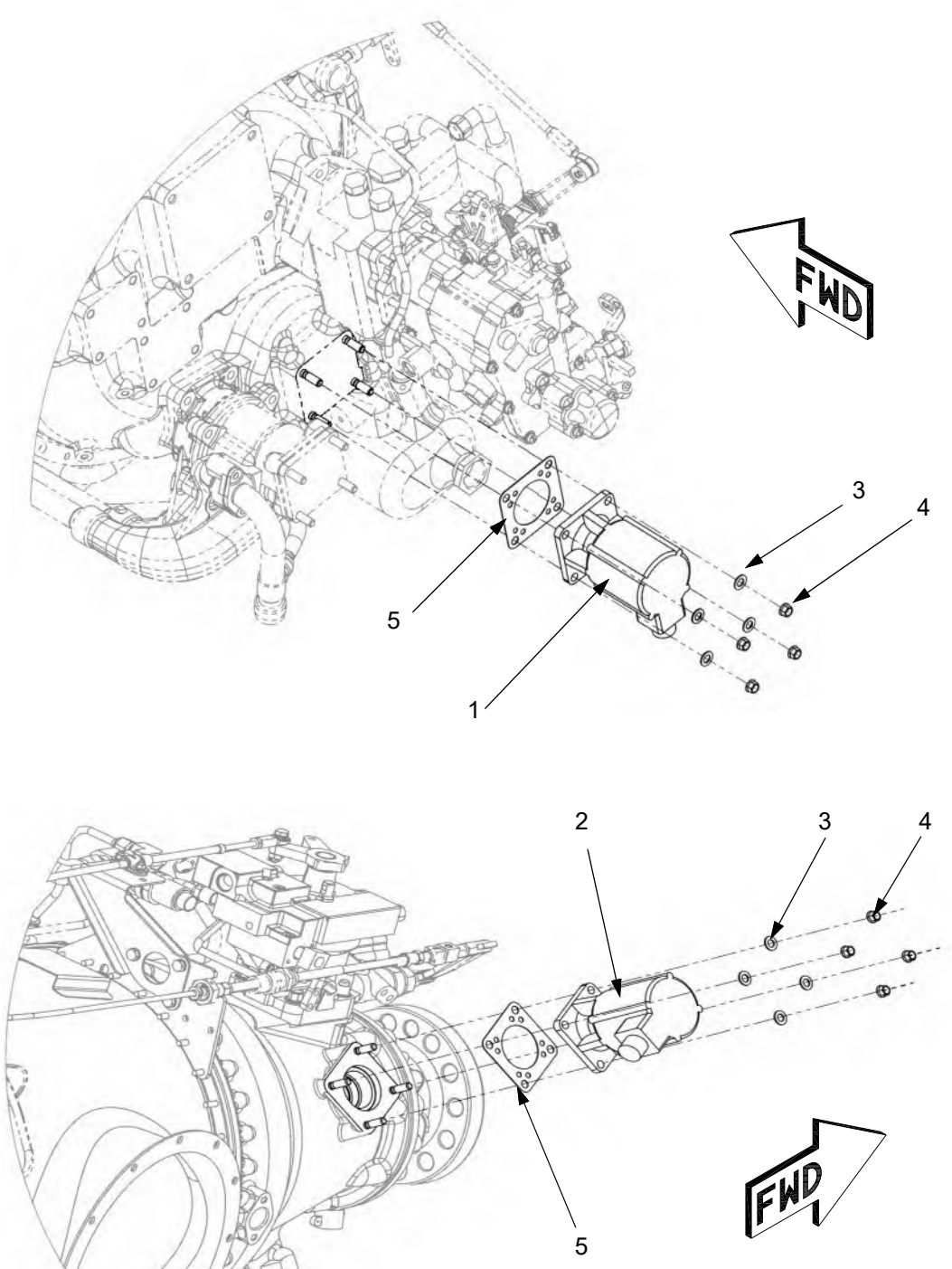

LEGEND

1. N_1 Tachometer Generator
2. N_2 Tachometer Generator
3. Washer
4. Nut
5. Gasket

C. Tachometer Generator Adapter

The tachometer generator adapter converts the output of the engine tachometer generators to a digital format that can be used by the airplane display and control systems.

(1) Removal

(a) Remove PFD 2 (refer to Chapter 34-40).

(b) Remove the socket head screws and washers that attach the tachometer generator adapter to the instrument panel.

(c) Carefully pull the adapter forward then disconnect the wiring harness.

(d) Remove the adapter.

(2) Installation

(a) Inspect the wiring connectors to ensure there are no bent or damaged pins. Repair any damage.

(b) Connect the wiring harness to the tachometer generator adapter.

(c) Attach the adapter to the instrument panel using washers and socket head screws.

(d) Install PFD 2 (refer to Chapter 34-40).

Figure 77-40.3: Tachometer Generator Adapter

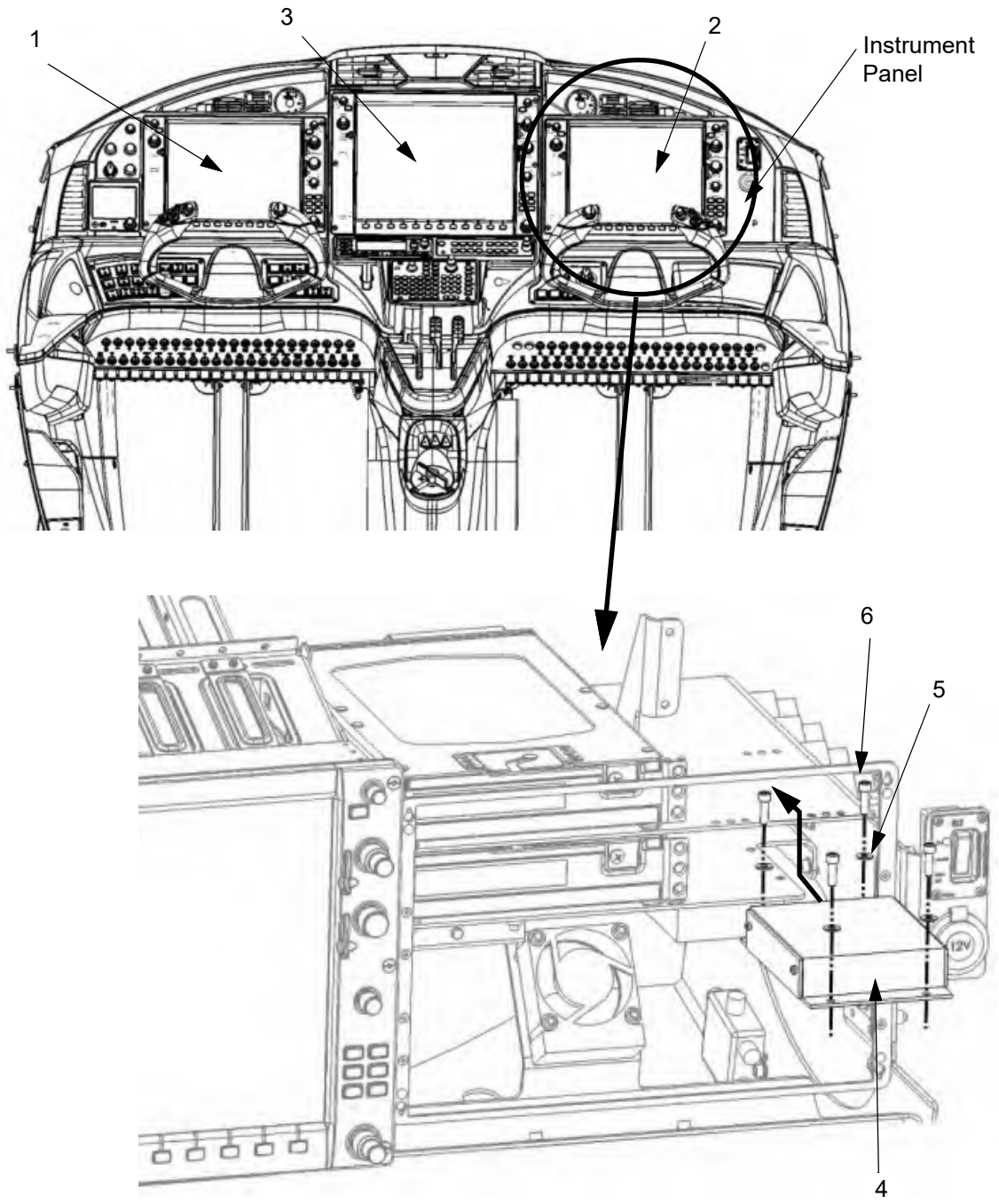

LEGEND

1. GDU 1050 PFD 1
2. GDU 1050 PFD 2
3. GDU 1250 MFD
4. Tachometer Generator Adapter
5. Washer
6. Socket Head Screw

D. Differential Pressure Transducer

The differential pressure transducer outputs engine torque data.

(1) Removal

(a) Set the BATT 1 and BATT 2 switches to OFF.

(b) Disconnect external electrical power from the airplane (refer to Chapter 24-40).

(c) Remove the cowling (refer to Chapter 71-10).

(d) Disconnect the wiring harness from the transducer.

(e) Remove the two tubing assemblies connecting the transducer to the engine.

(f) Loosen the clamps securing the transducer to the engine.

(g) Remove the transducer.

(h) Plug or cap all open connections to keep out dirt or contamination.

(2) Installation

(a) Uncap or unplug the tubing and connections.

(b) Insert the transducer into the mounting clamps.

(c) Connect the transducer to the engine using the tubing assemblies.

(d) Tighten the clamps to attach the transducer to the engine.

(e) Connect the wiring harness to the transducer.

(f) Install the cowling (refer to Chapter 71-10).

Figure 77-40.4: Differential Pressure Transducer

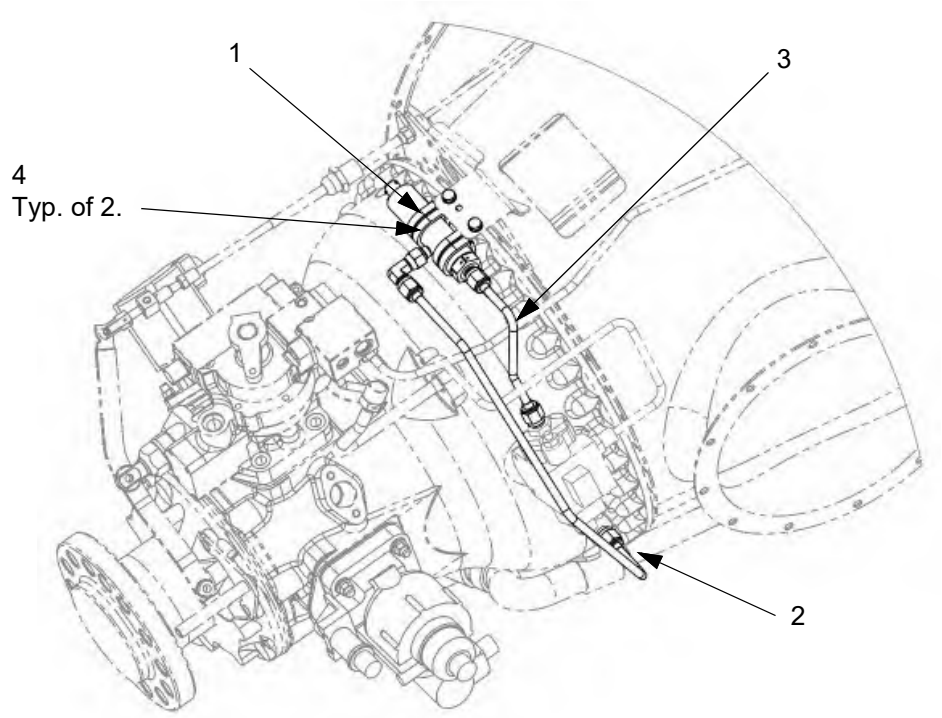

LEGEND

1. Differential Pressure Transducer
2. Tubing, High Engine Torque
3. Tubing, Low Engine Torque
4. Clamp

E. Engine Chip Detector Operational Check

(1) Set the BATT 1 and BATT 2 switches to OFF.
(2) Remove the cowling (refer to Chapter 71-10).
(3) Disconnect the electrical connector from the engine chip detector.
(4) Install a jumper wire between the pins of the engine chip detector electrical connector.
(5) Connect external electrical power to the airplane (refer to Chapter 24-40).
(6) Set the BATT 1 and BATT 2 switches to ON.
(7) Make sure the “ENGINE CHIP” CAS message is illuminated.

Note: If the ENGINE CHIP CAS does not illuminate, inspect the wiring for correct routing and bend relief. Inspect the connector for correctly crimped wires and seated pins. If re-pinning the electrical connector is required, a single fold back of the conductor is needed to increase the effective cross-section area of the conductor to allow for correct crimping. Ensure the fold end of the conductor does not extend past the end of the contact barrel.

(8) Set the BATT 1 and BATT 2 switches to OFF.
(9) Remove the jumper wire from the engine chip detector electrical connector pins.
(10) Set the BATT 1 and BATT 2 switches to ON.
(11) Make sure the “ENGINE CHIP” CAS message is off.
(12) Set the BATT 1 and BATT 2 switches to OFF.
(13) Connect the electrical connector to the engine chip detector.
(14) Install the cowling (refer to Chapter 71-10).
(15) Disconnect external electrical power from the airplane (refer to Chapter 24-40).

Figure 77-40.5: Engine Chip Detector

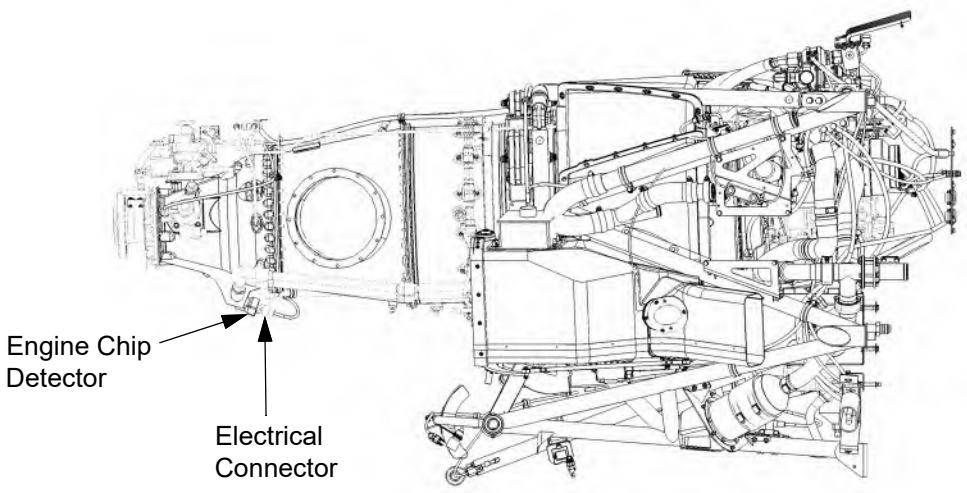

This Page Intentionally Left Blank

CHAPTER
78

Exhaust

This Page Intentionally Left Blank

List of Effective Pages

Chapter/Section	Page Number	Effective Date
78-Title	Page 1	02 Jan 2020
78-Title	Page 2	02 Jan 2020
78-LOEP	Page 1	13 Apr 2020
78-LOEP	Page 2	02 Jan 2020
78-TOC	Page 1	02 Jan 2020
78-TOC	Page 2	02 Jan 2020
78-00	Page 1	13 Apr 2020
78-00	Page 2	02 Jan 2020
78-10	Page 1	02 Jan 2020
78-10	Page 2	02 Jan 2020
78-10	Page 3	02 Jan 2020
78-10	Page 4	02 Jan 2020

This Page Intentionally Left Blank

Table of Contents

List of Effective Pages ..... 78-LOEP / Page 1
Table of Contents ..... 78-TOC / Page1

Paragraph **Page Number**

Exhaust

1. General ..... 78-00 / Page 1

Collector/Nozzle

1. Description ..... 78-10 / Page 1
2. Maintenance Practices ..... 78-10 / Page 1
   A. Exhaust Stack ..... 78-10 / Page 1

This Page Intentionally Left Blank

EXHAUST

1. General

This chapter gives information and procedures relevant to the exhaust stacks which direct engine exhaust gases directly from the exhaust ports of the engine to outside of the cowling.

This Page Intentionally Left Blank

COLLECTOR/NOZZLE

1. Description

This section gives information and procedures relevant to the exhaust stacks which collect the exhaust gases from the turbine and expell them overboard.

2. Maintenance Practices

Removal and installation procedures for the left and right exhaust stacks are identical.

A. Exhaust Stack

(1) Removal

(a) Remove the cowling (refer to Chapter 71-10).

(b) Remove the bolts, washers, and nuts holding the exhaust stack to the engine.

(c) Remove the stack.

(2) Installation

(a) Position and align the exhaust stack to the engine flange.

(b) Attach the stack to the flange using bolts, washers, and nuts.

(c) Torque the nuts 50 to 70 in-lbs in a two stage process using a crossing pattern. (refer to Figure 78-10.1).

(d) Install the cowling (refer to Chapter 71-10)

(3) Inspections

(a) Visually inspect the stacks and mounting flanges for cracks, corrosion, and deformation. The exhaust stacks may be operated with cracks at the exit end of the stack up to four inches in length if no more than four cracks are present in one stack and no two cracks are on an intersecting course.

CAUTION: DO NOT fly the airplane if there are any cracks in the seam welds or in proximity to the mounting flange until further flight is approved by Frakes Aviation, 2101 West Kilpatrick, Cleburne, TX 76033, Tel: 817.556.0700

(b) Inspect the mounting hardware for condition and security. Verify torque.

(c) Inspect the cowling for evidence of contact with the exhaust stacks. Dark gray or black marks are an indication that the cowling is contacting the stacks.

(4) Repair

(a) Contact Frakes Aviation before doing any repairs on the exhaust stacks.

CAUTION: DO NOT stop drill any cracks. This practice will not stop the crack and will complicate any repairs.

Note: If repair is approved by Frakes Aviation use the following procedure, unless otherwise instructed:

(b) Remove the exhaust stack from the engine.

(c) Remove all carbon from the interior and exterior surfaces using hot soapy water and a suitable brush. Let the exhaust stack dry thoroughly. If repair is in the exit stiffener use compressed air to blow the water out from between the stack and the stiffener.

(d) Wire brush both the inside and outside of the cracked area using a brush with fine stainless steel bristles.

(e) Rinse the area to be repaired using solvent (Acetone or suitable alternative) then let the area dry.

(f) Before welding the crack, do one of the following procedures:

(i) Put a copper sheet that is a minimum of 0.063 inch thick against the inside surface of the crack.

(ii) Cap the openings in the exhaust stack and seal the remaining small crevices with tape. Introduce an argon purge at 10 cubic feet per hour for five minutes before welding. Continue until the repair is complete.

(g) Repair crack(s) using the TIG (tungsten arc inert gas) welding process and a 0.035 inch welding rod.

(h) For repair of spot welds, as long as the crack is confined to the original spot weld area we prefer to have the repair made as a rosette from the side that the crack appears on. No backside purging is necessary. After completing the repair simply clean the “sugar” off with a fine stainless steel brush.

(i) Install the exhaust stack.

Figure 78-10.1: Exhaust Stacks (Sheet 1 of 2)

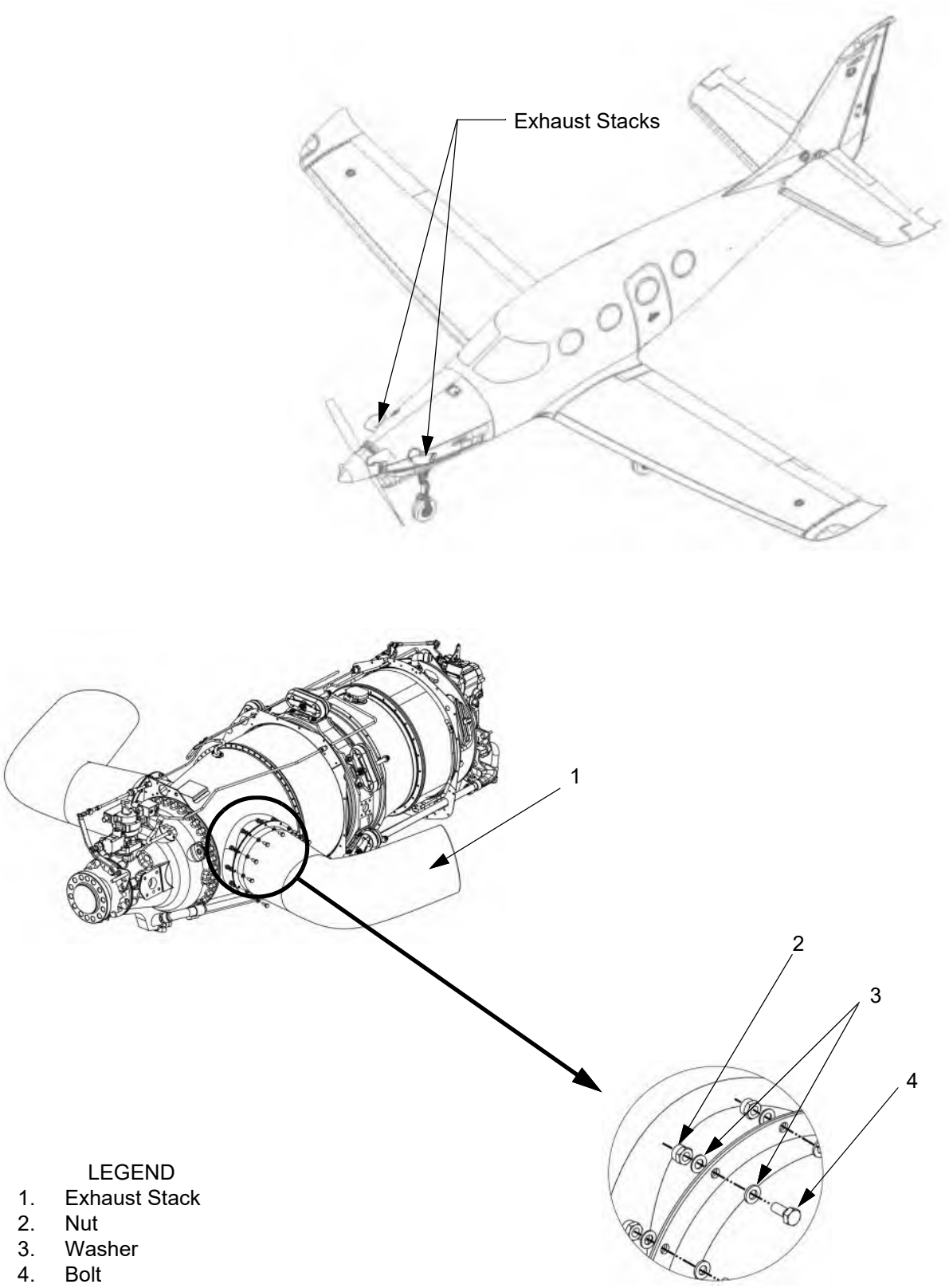

LEGEND
1. Exhaust Stack
2. Nut
3. Washer
4. Bolt

Figure 78-10.1: Exhaust Stacks (Sheet 2 of 2)

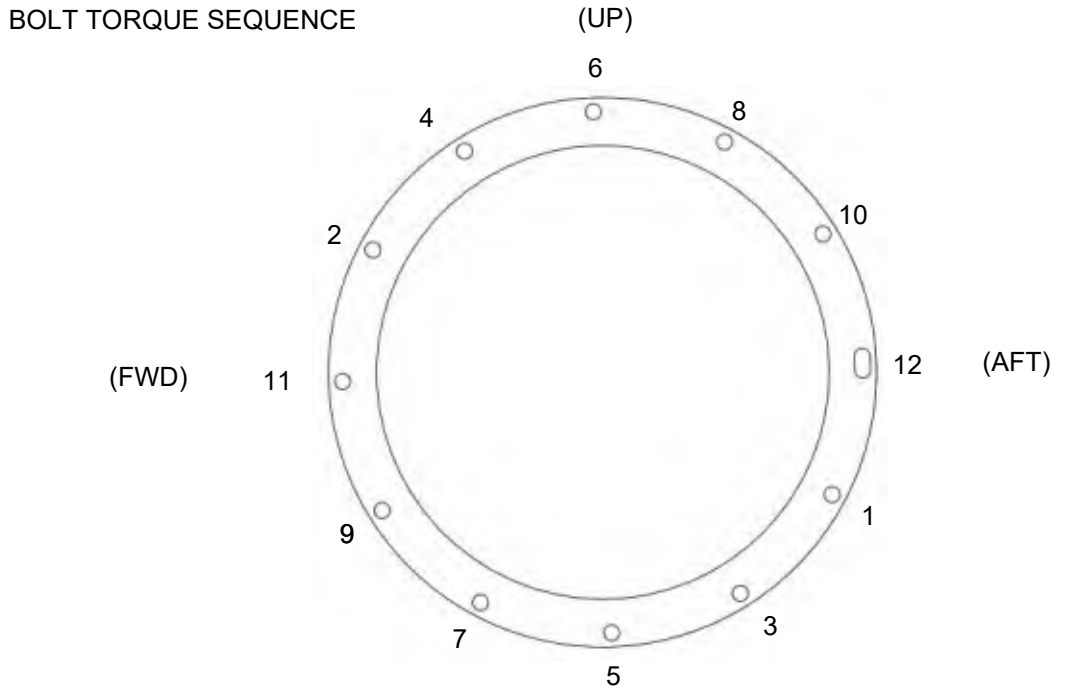

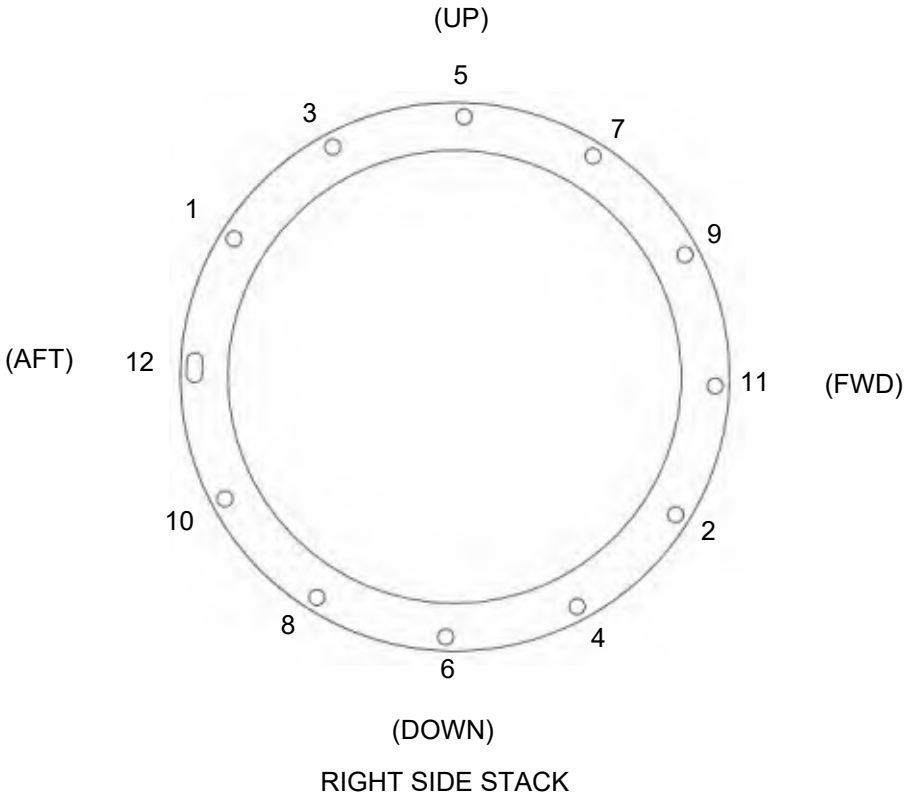

CHAPTER
79

Oil

This Page Intentionally Left Blank

List of Effective Pages

Chapter/Section	Page Number	Effective Date
79-Title	Page 1	02 Jan 2020
79-Title	Page 2	02 Jan 2020
79-LOEP	Page 1	08 Sep 2026
79-LOEP	Page 2	02 Jan 2020
79-TOC	Page 1	02 Jan 2020
79-TOC	Page 2	02 Jan 2020
79-00	Page 1	13 Apr 2020
79-00	Page 2	02 Jan 2020
79-20	Page 1	02 Jan 2020
79-20	Page 2	02 Jan 2020
79-20	Page 3	02 Jan 2020
79-20	Page 4	02 Jan 2020
79-20	Page 5	08 Sep 2026
79-20	Page 6	08 Sep 2026
79-20	Page 7	02 Jan 2020
79-20	Page 8	02 Jan 2020

This Page Intentionally Left Blank

Table of Contents

List of Effective Pages ..... 79-LOEP / Page 1
Table of Contents ..... 79-TOC / Page1

Paragraph **Page Number**

Oil

1. General ..... 79-00 / Page 1
2. Troubleshooting ..... 79-00 / Page 1

Distribution

1. Description ..... 79-20 / Page 1
2. Maintenance Practices ..... 79-20 / Page 1
   A. Oil Cooler ..... 79-20 / Page 1
   B. Oil Pressure Transducer ..... 79-20 / Page 5
   C. Oil Temperature Sensor ..... 79-20 / Page 5

This Page Intentionally Left Blank

OIL

1. General

The oil system for the Pratt & Whitney PT6A-67A turbine engine has a pressure system, scavenge system, breather system, oil cooling system, indicating system, and overboard breather line. All components of the oil system are contained within or on the engine except for the oil cooler which is mounted underneath the engine.

2. Troubleshooting

Refer to the Pratt &Whitney Maintenance Manual for Turboprop Gas Turbine Engine, Manual No. 3036132.

This Page Intentionally Left Blank

DISTRIBUTION

1. Description

This section gives information and procedures for the engine oil distribution system.

2. Maintenance Practices

A. Oil Cooler

(1) Removal

(a) Park the airplane on level ground.

(b) Set the BATT 1 and BATT 2 switches to OFF.

(c) Disconnect external electrical power from the airplane (refer to Chapter 24-40).

(d) Remove the cowling (refer to Chapter 71-10).

(e) Put suitable oil drain pans under all the drains.

(f) Remove the chip detector from the engine.

(g) Remove the oil drain plugs.

(h) Remove the oil-to-fuel heater drain plug.

(i) Let the oil drain out completely. Collect an oil sample, as necessary.

(j) Disconnect the (2) hoses from the oil cooler.

(k) Remove the (4) bolts, (8) washers, (2) spacers (if installed), and (4) nuts attaching the oil cooler to the engine mount and to the left and right oil cooler brackets.

(l) Remove the oil cooler.

(2) Installation

Note: Seal all pipe threads using Loctite™ 567 or anti-seize PTFE tape conforming to A-A-58092-2-2.

(a) Attach the oil cooler to the engine mount and to the left and right oil cooler brackets using the (4) bolts, (8) washers, (2) spacers (if installed), and (4) nuts.

(b) Connect the (2) hoses to the oil cooler. Torque fitting installations and hose connections 84 to 92 ft-lbs.

(c) Install the oil-to-fuel heater drain plug.

(d) Install the oil drain plugs.

(e) Install the chip detector.

(f) Replenish the engine oil (refer to Chapter 12-10).

(3) Inspections

(a) Inspect for security of attachment of the oil cooler to the engine mount.

(b) Inspect for security and leaks at the fittings and hoses.

(c) Inspect the condition of the hoses and hose fireproofing.

(d) Inspect the condition of the oil cooler. Ensure there are no dents, cracks, or leaks.

Figure 79-20.1: Oil Cooler (Sheet 1 of 2)

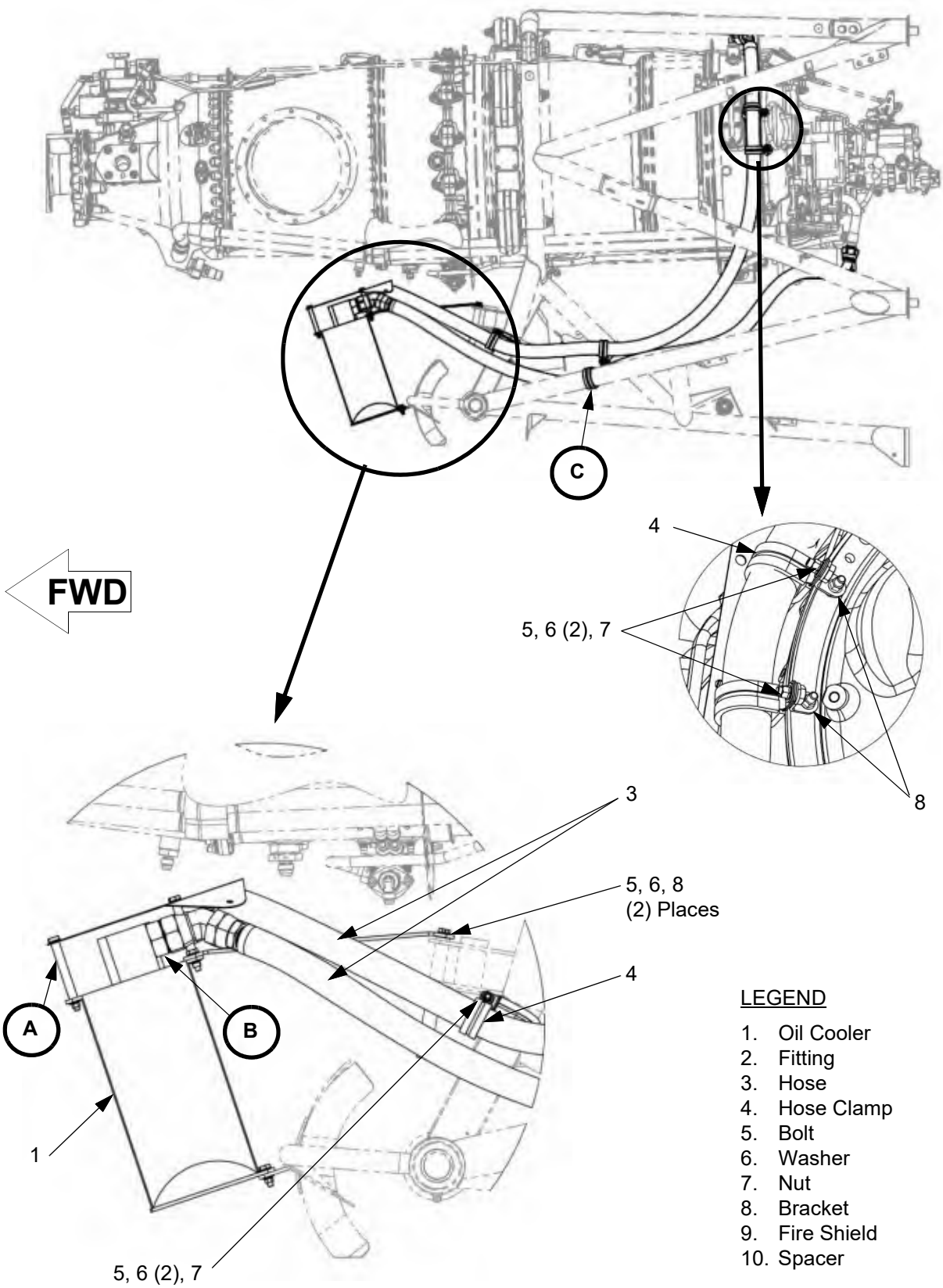

Figure 79-20.1: Oil Cooler (Sheet 2 of 2)

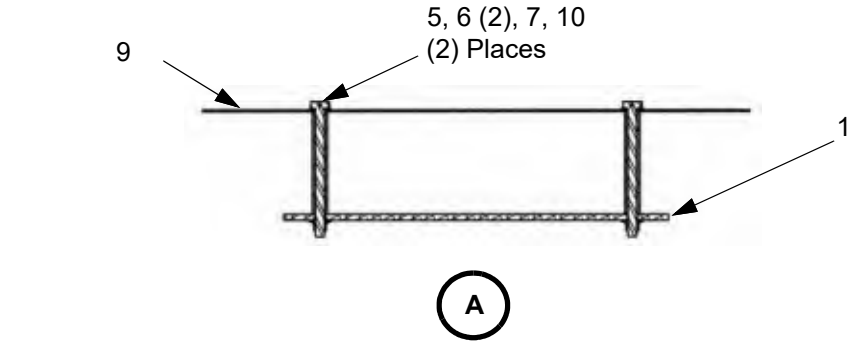

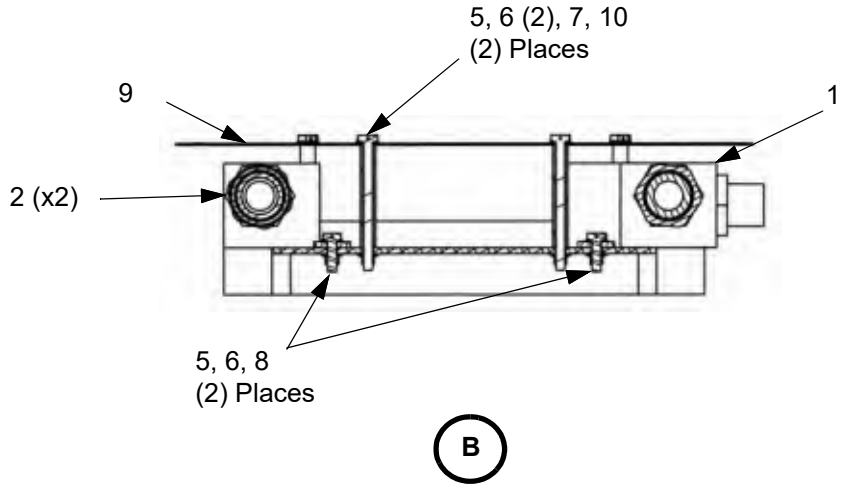

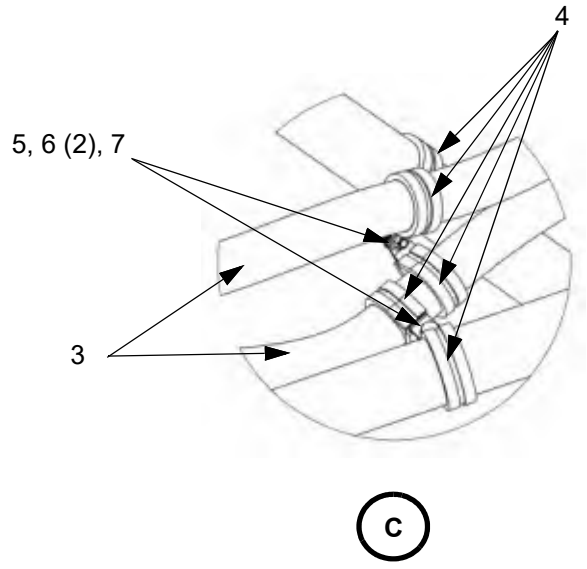

LEGEND

1. Oil Cooler
2. Fitting
3. Hose
4. Hose Clamp
5. Bolt
6. Washer
7. Nut
8. Bracket
9. Fire Shield
10. Spacer

B. Oil Pressure Transducer

(1) Removal

(a) Set the BATT 1 and BATT 2 switches to OFF.

(b) Disconnect external electrical power from the airplane (refer to Chapter 24-40).

(c) Remove the cowling (refer to Chapter 71-10).

(d) Disconnect the electrical harness from the transducer.

(e) Loosen the clamp then remove the transducer from the elbow fitting.

(f) If necessary, remove the connecting hose and fittings.

(2) Installation

Note: Seal all pipe threads using Loctite™ 567 or anti-seize PTFE tape conforming to A-A-58092-2-2.

(a) If necessary, install the connecting hose and fittings.

(b) Install the oil pressure transducer into the elbow fitting.

(c) Attach the wiring harness to the transducer. Secure the connector to the transducer using a zip tie.

(d) Install safety wire.

(e) Run the engine and verify the oil pressure is reading correctly then shut down the engine and check for oil leaks at the oil pressure transducer.

(f) If the OIL PSI reading is not 0 when the engine isn't running, do the Oil Pressure Input DAT Calibration, refer to Chapter 39.10.2.H (SN: K003-K085, except K014) or Chapter 39.11.2.H (SN: K014, K086 and On).

(g) Install the cowling (refer to Chapter 71-10).

C. Oil Temperature Sensor

(1) Removal

(a) Set the BATT 1 and BATT 2 switches to OFF.

(b) Disconnect external electrical power from the airplane (refer to Chapter 24-40).

(c) Remove the cowling (refer to Chapter 71-10).

(d) Disconnect the electrical harness from the sensor.

(e) Remove the sensor and gasket from the tee.

(2) Installation

Note: Seal all pipe threads using Loctite™ 567 or anti-seize PTFE tape conforming to A-A-58092-2-2.

(a) Install a new crush washer onto the oil temperature sensor with the split in the crush washer facing the oil temperature sensor.

(b) Thread the sensor into the tee. Torque 120 in-lbs.

(c) Attach the wiring harness to the sensor.

(d) Install safety wire.

(e) Run the engine and verify the oil temperature is reading correctly then shut down the engine and check for oil leaks at the oil temperature sensor.

(f) Install the cowling (refer to Chapter 71-10).

Figure 79-20.2: Oil Pressure Transducer and Oil Temperature Sensor

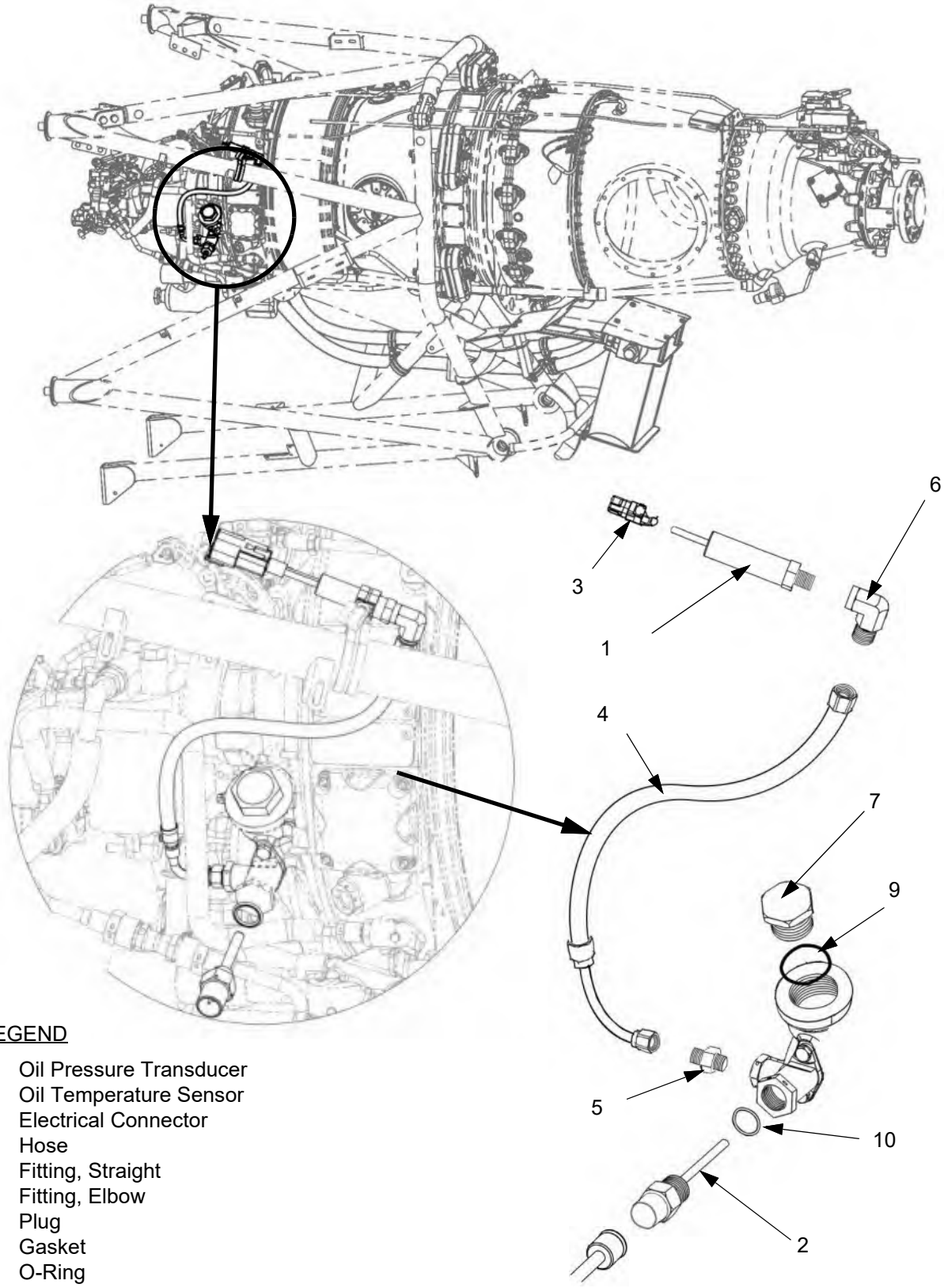

LEGEND

1. Oil Pressure Transducer
2. Oil Temperature Sensor
3. Electrical Connector
4. Hose
5. Fitting, Straight
6. Fitting, Elbow
7. Plug
8. Gasket
9. O-Ring
10. Crush Washer

This Page Intentionally Left Blank