

AIRCRAFT WIRING MANUAL

For the
Epic E1000 and
E1000 *GX*

EPIC AIRCRAFT, LLC
22590 Nelson Road
Bend, OR 97701-9710
Phone: (541) 318-8849
Fax: (541) 382-5125

FAA approval has been obtained on the technical data in this publication that affects airplane type design.
COPYRIGHT 2020
Subject to Non-Disclosure Agreement
EPIC AIRCRAFT, LLC
BEND, OREGON, USA
P/N SK05000002
ISSUED: 02 Jan 2020

Log of Revisions

Revision Number	Issue Date
Original	02 Jan 2020
A	14 Jul 2021
B	17 Aug 2022
C	14 July 2025

Revision Number	Issue Date

Revision Number	Issue Date

This Page Intentionally Left Blank

CHAPTER 1

Introduction

This Page Intentionally Left Blank

List of Effective Pages

Chapter/Section	Page Number	Effective Date
1-Title	Page 1	02 Jan 2020
1-Title	Page 2	02 Jan 2020
1-LOEP	Page 1	02 Jan 2020
1-LOEP	Page 2	02 Jan 2020
1-TOC	Page 1	02 Jan 2020
1-TOC	Page 2	02 Jan 2020
1-00	Page 1	02 Jan 2020
1-00	Page 2	02 Jan 2020
1-00	Page 3	02 Jan 2020
1-00	Page 4	02 Jan 2020
1-00	Page 5	02 Jan 2020
1-00	Page 6	02 Jan 2020

This Page Intentionally Left Blank

CHAPTER 1

Table of Contents

List of Effective Pages ..... 1-LOEP / Page 1
Table of Contents ..... 1-TOC / Page1

Paragraph **Page Number**

1. General ..... 1-00 / Page 1
2. Warning, Caution, and Note ..... 1-00 / Page 1
3. Wiring Manual Chapters ..... 1-00 / Page 2
4. List of Publications ..... 1-00 / Page 3
5. Revisions Service ..... 1-00 / Page 6
   A. Revisions ..... 1-00 / Page 6
   B. Revision Bars ..... 1-00 / Page 6

This Page Intentionally Left Blank

1. General

This manual is intended to assist mechanics and other authorized personnel in maintaining the Epic E1000 aircraft.

The manual is arranged according to guidelines established by the Air Transport Association of America (ATA) Specification 100. All parts of the manual are further divided into chapters. Chapters are divided, when necessary, into subchapters.

2. Page Numbering

Pages are numbered using two numbers separated by a dash followed by a forward slash and a sequential page number. The first number represents the chapter/system and the second indicates the section/subsystem. The section/subsystem number is always a two digit number.

Whenever the section/subsystem number is shown as two zeros (e.g. 27-00), the information on the page is general and applicable to the entire system.

The page numbering sequence starts at “1” at the beginning of each chapter/system.

The Table of Contents and the List of Effective Pages of each chapter/system are treated as if they are individual chapters.

3. Wiring Manual Chapters

Chapter Title	Chapter No.
Introduction	1
Standard Practices	20
Air Conditioning	21
Auto Flight	22
Communications	23
Electrical Power	24
Equipment/Furnishings	25
Flight Controls	27
Fuel	28
Ice and Rain Protection	30
Indicating and Recording Systems	31
Landing Gear and Brakes	32
Lights	33
Navigation	34
Oxygen	35
Electrical Panels and Multipurpose Components	39
Doors	52
Windows	56
Engine Indicating	77

4. Definitions

(1) Aircraft - An airplane, helicopter or lighter-than-air vehicle.

(2) Annealing (metallurgy) - A heat treatment that alters the microstructure of a material causing changes in properties such as strength, hardness, and ductility.

(3) Back Shell - A type of strain relief.

(4) Barrel (Contact Wire Barrel) - The section of contact that accommodates the stripped conductor.

(5) Birdcaging - The radial expansion of individual strands in a stranded conductor (bowing outward) that can occur in the exposed portion of the conductor between the insulation strip and termination point.

(6) Braid - A fibrous or metallic group of filaments interwoven to form a protective covering over one or more wires.

(7) Branch - A section of harness that divides off and extends to a point of termination.

(8) Breakout - The separation of a conductor or group of conductors from the main body of wires in a harness.

(9) Bundle - Any number of harnesses or branches routed and supported together along some distance within the aircraft.

(10) Cable - A shielded single conductor or a combination of conductors insulated from one another (multiple conductor).

(11) Cable, Coaxial - A cable in which an insulated conductor is centered inside another. The outer conductor is usually a metal braid or metal sheath. Braided cables usually have an outer insulating jacket over the braid. Coaxial cables are used primarily for transmission of RF signals.

(12) Chafing - Repeated relative motion between wiring system components, or between a wiring system component and structure or equipment, which results in a rubbing action that causes wear which will likely result in mechanical or electrical failure during the aircraft specified service life.

(13) Circular Mil Area - A unit denoting the cross-sectional size of a wire or cable.

(14) Connector Accessories - Electrical connectors must be provided with strain relief accessories in accordance with AS85049. Accessories must not be used to terminate ground wires or shields unless the accessory was specifically designed to terminate ground wires or shields.

(15) Connector Plug - The connector containing the coupling ring or active retention device of the mating pair.

(16) Connector Receptacle - The connector containing the static retention device of the mating pair.

(17) Contact - The conductive element in a connector or other terminal de-vice that mates with a corresponding element for the purpose of transferring electrical energy.

(18) Contact Retention - The axial load in either direction that a contact can with-stand without being dislodged from its normal position within an insert or body.

(19) Contact, Crimp - A contact whose crimp barrel is a hollow cylinder that accepts the conductor. After a conductor has been inserted, a tool is used to crimp the contact metal firmly onto the conductor.

(20) Contact, Insertable/Removable - A contact that can be mechanically joined to or removed from an insert. Usually, special tools are used to insert (lock) the contact into place or to remove it.

(21) Contact, Pin - Male-type contact designed to slip inside a socket contact.\

(22) Contact, Socket - A female-type contact designed to slip over a pin contact.

(23) Crimp - The physical compression (deformation) of a contact barrel around a conductor to make an electrical and mechanical connection to the conductor.

(24) Crimping - A method of mechanically compressing or securing a terminal, splice, or contact to a conductor.

(25) Drain Wire - A wire that runs linearly along a foil shield wire or cable and is used to make contact with the shield. Grounding of foil shields is done with drain wires.

(26) Dust Protection - Unmated connectors must be suitably covered. Plastic dust caps such as those conforming to AS85049/138, NAS831 and NAS837 may be used.

(27) Electrical Cable - Two or more insulated conductors, solid or stranded, contained in a common covering, or two or more insulated conductors twisted or molded together without common covering, or one insulated conductor with a metallic covering shield or outer conductor.

(28) Ferrule - A short metal tube used to make crimp connections to shielded or coaxial cables.

(29) Fillet - A smooth concave buildup of material between two surfaces; e.g., a fillet of solder between a conductor and a solder terminal.

(30) Fireproof - The capability of a material or component to withstand a 2000 °F flame (±150 °F) for 15 minutes minimum, while still fulfilling its design purpose.

The term “fireproof” when applied to a connector, backshell or accessory hardware mounted and secured to a structure used to confine fires within designated fire zones means that the connector system will perform this function (conduct electrical power and prevent flame/heat penetration) under conditions likely to occur in such zones and will withstand a 2000 °F flame (±150 °F) for 15 minutes minimum. A connector system consists of mated connectors, fully wired, backshells or conduit assemblies, and mounting hardware installed on a structural panel (firewall).

(31) Fire Resistant - The capability of a connector system (as defined in “fireproof”) to perform its intended function in designated fire zone areas under heat and other abnormal conditions, as encountered in powerplants and auxiliary power unit (APU) installations, that are likely to occur at the particular location or area and to withstand a 2000 °F flame (±150 °F) for 5 minutes minimum.

(32) Firewall - A structural panel designed to prevent a hazardous quantity of air, fluid, or flame from exiting a designated fire zone in which a fire may erupt and cause additional hazard to the aircraft. This structural panel permits penetration of fluid carrying lines (fuel and hydraulics), ducts, electrical power and control cables/or rods through the use

of suitable fireproof components or fittings. The firewall and the attached components or fittings shall withstand flame penetration and shall not exhibit backside ignition for the required test time (15 minutes). The backside temperature should not exceed 450 °F maximum and the structural panel should have fireproof insulating material installed to limit the backside temperature.

(33) Fire Zone - A designated area or enclosure generally considered to be within certain selected areas within engine nacelles and APU installations that under abnormal operating conditions can experience temperatures approaching 2000 °F. These conditions are generally the results of fuel or hydraulic line failures, heat duct failures, or engine case burn through allowing high pressure and high temperature gas to escape from the engine, and similar types of failures. Some typical fire zones are the engine nacelles, (APU) compartment, fuel burning heaters, and other combustion equipment installations. Other areas such as wheel wells may also be considered a fire zone area due to the heat generated from the brakes.

(34) Flammable - Capable of bursting into flame when a spark or open flame is passed sufficiently near, as with fumes and vapors from hot oils or volatile combustible liquids, and with finely powdered, combustible solids.

(35) Grommet - An insulator that covers sharp edges of holes through panels and partitions to protect wire insulation from cut-through damage.

(36) Group - A number of wires and/or electrical/optical cables and their terminations secured together within the structure of a bundle or harness. Groups normally contain wire and/or electrical/optical cables pertaining to a single circuit or routed to a single item of equipment.

(37) Harness - An assembly of any number of wires, electrical/optical cables and/or groups and their terminations which is designed and fabricated so as to allow for installation and removal as a unit. A harness may be an open harness or a protected harness.

(38) Harness Critical Clamp Locator Markers. - Markers are used to identify specific clamping or structural reference locations. Markers are permanent or semi-permanent. Markers can be paint, tape or sleeving attached to electrical wires, harnesses, and cable bundles.

(39) Insertion Tool - A device used to install contacts into a contact cavity in a connector insert.

(40) Interfacial Seal - A sealing of mated connectors over the whole area of the interface to provide sealing around each contact.

(41) Jacket - The outermost layer of insulating material of a cable or harness.

(42) Open Harness - An assembly of wires and/or electrical/optical cables that does not include a protective outer covering.

(43) Primary Support - Support provided for wiring that carries the weight of the wiring and secures it in the intended position

(44) Protected Harness - A harness that employs some overall outer covering to provide additional mechanical protection for the wires and/or electrical/optical cables contained therein. The added protection may consist of an overbraid, tape wrap, conduit or some other form of protection.

(45) Secondary Supports - Supports used to secure the cabling between primary supports.

(46) Sealing Plug - A plug that is inserted to fill an unoccupied contact aperture in a connector. Its function is to seal an unoccupied aperture in the assembly, especially in environmental connectors.

(47) Severe Wind And Moisture Problems (Swamp) Areas - Areas such as wheel wells, wing folds and areas near wing flaps, and areas directly exposed to extended weather conditions are considered SWAMP areas on aircraft.

(48) Shielded Cable - Cable surrounded by a metallic covering intended to minimize the effects of electrical crosstalk interference or signal radiation.

(49) Shielding - The metal covering surrounding one or more conductors in a circuit to prevent interference or signal radiation.

(50) Solder - A nonferrous, fusible metallic alloy used to join metallic surfaces.

(51) Solder Cup Terminal - A hollow, cylindrical terminal designed to accommodate one or more conductors.

(52) Solder Sleeve - A heat-shrinkable solder termination device with meltable sealing preforms at ends.

(53) Soldering - The process of joining clean metallic surfaces through the use of solder without direct fusion of the base metals.

(54) Splice - The joining of two or more conductors to each other.

(55) Spot Ties - Ties other than secondary support ties used to separate a number of wires, electrical/ optical cables, groups or harnesses within a bundle.

(56) Strain Relief - A connector device that prevents the disturbance of the con-tact and cable terminations.

(57) Stranded Conductor - A conductor composed of a group of smaller wires.

(58) Stress Relief - The formed portion of a conductor that provides sufficient length to minimize stress between terminations.

(59) Strip - To remove insulation from a conductor.

(60) Tab Terminal - A flat-surface terminal that is broad compared to the metal thickness.

(61) Tang (Connector Backshell) - A backshell tang is a tapering metal projection (straight, 45°, or 90° to the axis of the connector) designed to accommodate cable-tie attachments.

(62) Tines - Tines are the members of a contact retention system that capture or "lock" removable crimp contacts into the contact cavities.

(63) Tying Tapes - Tying tapes shall be in accordance with A-A-52080, A-A-52081, A-A-52082, A-A-52083, or A-A-52084. The physical properties of the tapes must be compatible with the installation environment. The A-A-52084 Aramid Finish C (sizes 2 or 3) tape is preferred for general applications. The A-A-52083 Glass Finish D with the additional Finish C (sizes 2 or 3) tape is preferred for high temperature (engine area) applications.

(64) Wicking - A flow of molten solder, flux, or cleaning solution by capillary action.

(65) Wire - A single metallic conductor of solid, stranded or tinsel construction, designed to carry current in an electric circuit, but not having a metallic covering, sheath or shield. For the purpose of this specification, “wire” refers to “insulated electric wire.”

(66) Wire Dress - The arrangement of wires and laced harnesses in an orderly manner.

(67) Wiring - Wires, electrical/optical cables, groups, harnesses and bundles, and their terminations, associated hardware, and support, installed in the aircraft. When used as a verb it is the act of fabricating and installing these items in the aircraft.

(68) Wiring Devices - Wiring devices are the accessory parts and materials which are used in the installation of electrical and optical wiring, such as terminals, connectors, junction boxes, conduit, clamps, insulation and supports.

(69) Wire Segment - A length of wire that is continuous and unbroken between its two intended points of termination. A wire segment that has been broken and then repaired is still considered to be one wire segment.

5. Revision Service

Revision Service for this manual is available from Epic Aircraft Customer Support.

Epic Aircraft, LLC
22590 Nelson Rd.
Bend, OR 97701
Phone: (541) 318-8849

A. Revisions

Revisions to this manual will be issued periodically. Revised pages are assigned a revision letter or number to distinguish them from past or future revisions.

B. Revision Bars

Changes to text and figures in the manual will be indicated by revision bars in the outer margin of the page adjacent to where the changes occur.

CHAPTER 20

Standard Practices

This Page Intentionally Left Blank

List of Effective Pages

Chapter/Section	Page Number	Effective Date
20-Title	Page 1	02 Jan 2020
20-Title	Page 2	02 Jan 2020
20-LOEP	Page 1	xx xxx 2023
20-LOEP	Page 2	02 Jan 2020
20-TOC	Page 1	02 Jan 2020
20-TOC	Page 2	02 Jan 2020
20-00	Page 1	02 Jan 2020
20-00	Page 2	02 Jan 2020
20-00	Page 3	02 Jan 2020
20-00	Page 4	02 Jan 2020
20-00	Page 5	02 Jan 2020
20-00	Page 6	02 Jan 2020
20-00	Page 7	02 Jan 2020
20-00	Page 8	02 Jan 2020
20-00	Page 9	02 Jan 2020
20-00	Page 10	02 Jan 2020
20-00	Page 11	02 Jan 2020
20-00	Page 12	xx xxx 2023
20-00	Page 13	xx xxx 2023
20-00	Page 14	xx xxx 2023
20-00	Page 15	xx xxx 2023
20-00	Page 16	02 Jan 2020
20-00	Page 17	02 Jan 2020
20-00	Page 18	02 Jan 2020

This Page Intentionally Left Blank

CHAPTER 20

Table of Contents

List of Effective Pages ..... 20-LOEP / Page 1
Table of Contents ..... 20-TOC / Page1

Paragraph **Page Number**

Standard Practices

1. General ..... 20-00 / Page 1
2. Harness and Assembly Identification ..... 20-00 / Page 1
3. Wire Marking ..... 20-00 / Page 2
   - A. Wire Coding ..... 20-00 / Page 2
   - B. Marking Placement ..... 20-00 / Page 2
   - C. Direct Marking ..... 20-00 / Page 2
   - D. Indirect Marking ..... 20-00 / Page 3
   - E. Wire Marking Products ..... 20-00 / Page 3
4. Splicing ..... 20-00 / Page 4
   - A. Heat Shrink Tubing ..... 20-00 / Page 5
   - B. Environmentally Sealed Splices ..... 20-00 / Page 5
5. Wire Crimping ..... 20-00 / Page 13
   - A. Wire Preparation ..... 20-00 / Page 13
   - B. Crimping Configurations ..... 20-00 / Page 15
   - C. Closed Barrel Crimps ..... 20-00 / Page 16
   - D. Stamped and Formed Closed Barrel Insulated Ring, Fork and Spade Tongue Terminals ..... 20-00 / Page 15
6. Coaxial Cable ..... 20-00 / Page 16
   - A. Stripping Coaxial Cable ..... 20-00 / Page 16
   - B. Straight Coaxial Connections ..... 20-00 / Page 17
   - C. Right Angle Coaxial Connections ..... 20-00 / Page 17
   - D. Installation of Coaxial Connectors ..... 20-00 / Page 18

This Page Intentionally Left Blank

STANDARD PRACTICES

1. General

This chapter describes procedures, practices, and materials to identify and process wires for joining and bundling into harness assemblies.

2. Harness and Assembly Identification

The following system is used for harness and assembly identification.

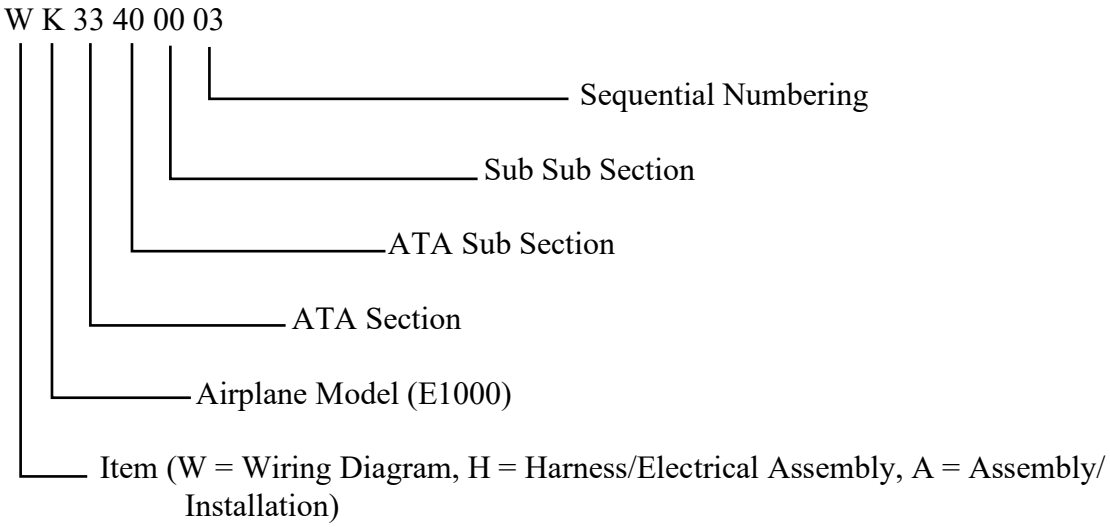

3. Wire Marking

The proper identification of electrical wires and cables with their circuits is necessary to provide safety of operation, safety to maintenance personnel, and ease of maintenance. Each wire and cable must be marked with a part number. The method of identification must not impair the characteristics of the wiring. To facilitate installation and maintenance, original wire-marking identification numbers are to be retained. All markings must be legible in size, type, and color.

A. Wire Coding

Wiring is identified using the following system.

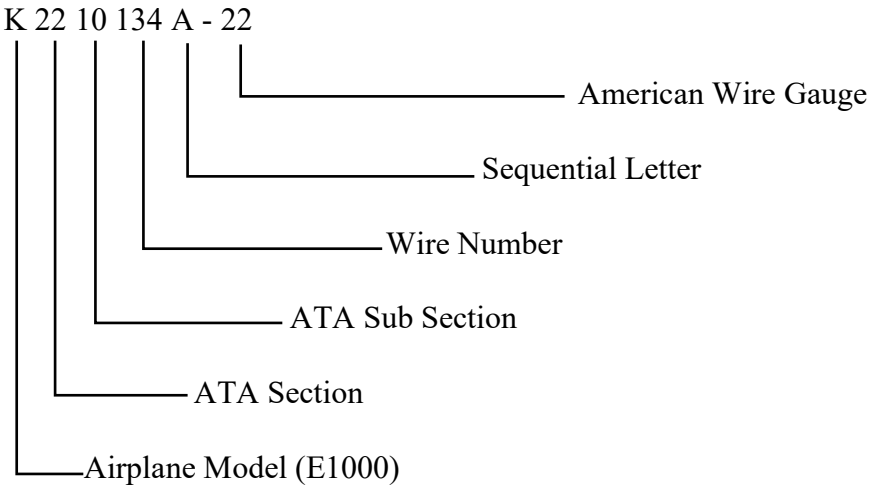

B. Marking Placement

Identification markings must be placed within 3 inches of each end of the wire and at 15-inch maximum intervals along the length of the wire. Wires less than 3 inches long need not be identified. Wires 3 to 7 inches in length must be identified approximately at the center. Added identification marker sleeves shall be so located that ties, clamps, or supporting devices need not be removed in order to read the identification. The wire identification code must be printed to read horizontally from left to right or vertically from top to bottom. The two methods of marking wire or cable are as follows:

C. Direct Marking

Direct marking is done by printing the cable's outer covering. The preferred method is to mark directly on the wire. Shielded wiring, multi-conductor cable, and thermocouple wires usually require heat shrinkable sleeves to carry identification marks. Whatever method of marking is used, the marking must be legible and the color must contrast with the wire insulation or sleeve. Identification methods such as "Laser Printing", "Ink Jet", and "Dot Matrix" are preferred. Hot stamp marking is not an acceptable method of wire marking.

D. Indirect Marking

Indirect marking is done by printing a heat-shrinkable sleeve then installing the printed sleeve on the wire or cable's outer covering. All material must meet Mil-I-23053/5 Class 1 (SAE-AMS-DTL-23053/5) specifications. Indirect-marked wire or cable must be identified with printed sleeves at each end and at intervals not longer than 6 feet. The individual wires inside a bundle, if not color coded and part of a Mil-C-27500 cable, must be identified within 3 inches of their termination. Flexible sleeving, either clear or opaque, is satisfactory for general use. When color coded or striped component wire is used as part of a cable, the identification sleeve must specify which color is associated with each wire identification code.

E. Wire Marking Products

Table 20-0.1: Recommended Indirect Marking Sleeve Size

Wire Size (AWG)	M23053/5 -(Size)-(Color)	Equivalent Sleeving Size
24	-102-*	1/16" (.063")
22	-103-*	3/32" (.095")
20	-104-*	1/8" (.125")
18	-105-*	3/16" (.188)
16	-105-*	3/16" (.188)
14	-106-*	1/4" (.250")
12	-106-*	1/4" (.250")
10	-107-*	3/8" (.375")
8	-108-*	1/2" (.500")
6	-109-*	3/4" (.750")
4	-109-*	3/4" (.750")
2	-110-*	1"
1	-110-*	1"
1/0 (0)	-110-*	1"
2/0 (00)	-111-*	1-1/2" (1.5")
M17/128-RG400	-109-*	3/4" (.750")
*Colors: -0 (Black); -4 (Yellow); -9 (White); -C (Clear)		

Use products which meet or exceed the Mil-I-23053/5 Class 1 (SAE-AMS-DTL-23053/5) specification.

CAUTION: Do not use metallic bands instead of insulating sleeves. Exercise care when marking coaxial or data bus cable, because deforming the cable may change its electrical characteristics.

4. Splicing

Splicing is permitted on wiring as long as it does not affect the reliability and the electromechanical characteristics of the wiring. Splicing of electrical wire must be kept to a minimum and avoided entirely in locations subject to extreme vibrations.

Many types of aircraft splice connectors are available for splicing individual wires. A self-insulated crimp-splice connector is preferred; however, a non-insulated splice connector may be used provided the splice is covered with Mil-I-23053/5 Class 1 heat shrink tubing that is secured at both ends. Environmentally sealed splices that conform to MIL-S-81824 provide a reliable means of splicing and is the preferred method of splicing.

There must not be more than one splice in any one wire segment between any two connectors or other disconnect points, except

1. when attaching to the spare pigtail lead of a potted connector.
2. to splice multiple wires to a single wire.
3. to adjust wire size to fit connector contact crimp barrel size.
4. to make an approved repair.

Splices in bundles must be staggered to minimize any increase in the size of the bundle, to ensure the bundle fits into its designated space, and to prevent congestion that will adversely affect maintenance.

Splices must not be used within 12 inches of a termination device, except when attaching to the pigtail spare lead of a potted termination device, or to splice multiple wires to a single wire, or to adjust the wire sizes so they are compatible with the contact crimp barrel sizes.

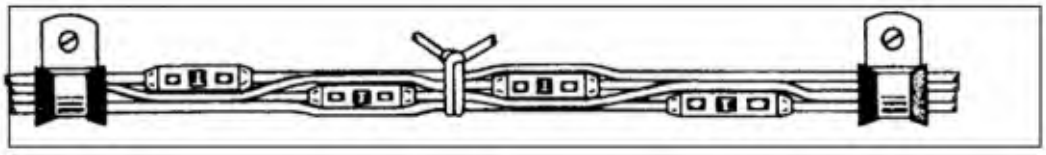

On occasion, a hand-soldered splice may be used, provided it is covered with M23053/5 C1 heat shrink tubing. To perform a soldered splice, execute the following steps:

1. Strip the wires to be joined ¼ inch,
2. tin the stripped leads with solder,

3. slip a 1-inch length of M23053 heat shrink tubing of appropriate diameter over one end of the splice,
4. place the tinned leads next to each other,
5. solder the tinned leads together, making sure a good solder fillet is formed,
6. cover the cooled joint with the heat shrink tubing and shrink it.

A. Heat Shrink Tubing

Heat shrink tubing must be polyolefin heat shrink tubing conforming to Mil-I-23053/5 Class 1. Use shrink ratios of 2:1 and 3:1. A 3:1 adhesive lined polyolefin must be used for environmentally sealing the tubing over a splice or other device when non-environmental splices are used.

B. Environmentally Sealed Splices

The parts covered by this section are designed for making immersion resistant crimped splices in wires rated for at least 125°C. This procedure covers crimp splices for making both stub and in-line splices. Parts are supplied in three basic configurations, according to the number of wires that can be spliced together.

The sealing sleeves covered by this section are designed for immersion resistant splice sealing when no more than one wire is inserted through each hole of the seals.

(1) One-Wire to One-Wire In-Line Splices, or Two-Wire Stub Splices

(a) Strip the wires to be spliced.

(b) The strip length for a particular crimp splice equals the length of the crimp barrel plus 1/32–1/16 inch (0.8–1.6 mm).

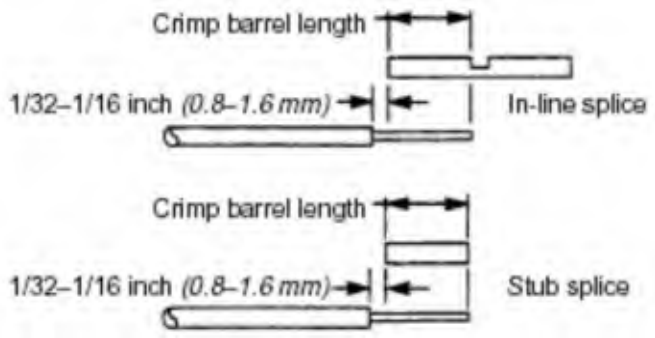

(c) If making an in-line splice, slide the sealing sleeve onto either wire. For stub splices, the sealing sleeve will be installed later.

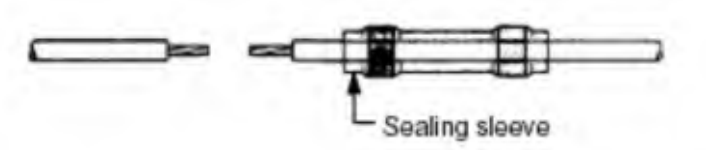

(d) Crimp the wires in the crimp splice. The gap between the end of the wire insulation and the crimp splice must be 1/32–1/16 inch (0.8–1.6 mm).

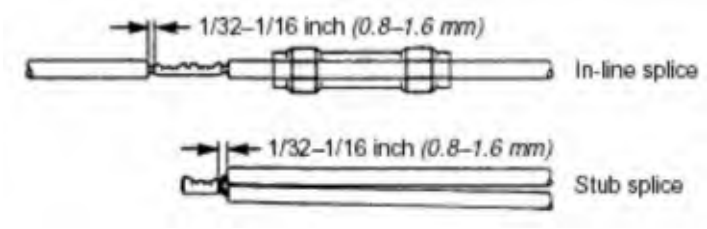

(e) Center the sealing sleeve over the splice area as shown below.

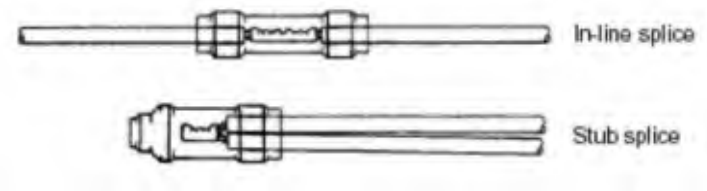

(f) Heat the sealing sleeve to shrink it and melt the seals as follows:

1. Use one of the heating tools listed in this chapter.
2. Heat the sleeve from one end toward the other. For stub splices, start at the end from which the wires exit.
3. Continue heating until the seals melt and flow along the wire insulation. For stub splices, heat until one seal melts and closes the end.
4. Allow the assembly to cool undisturbed.
5. Inspect the completed sealed splice.

(2) Multiple-to-One In-Line Splices and Multiple-Wire Stub Splices

(a) Strip the wires to be spliced. If any conductor is to be folded back to increase the effective cross-sectional area, strip that wire to twice the specified strip length.

(b) The strip length for a particular crimp splice equals the length of the crimp barrel plus 1/32–1/16 inch (0.8–1.6 mm) as shown in Figure 11 below.

(c) For most AWG 12 and smaller crimp splices, the correct strip length is 5/16–11/32 inch (7.9–8.7 mm).

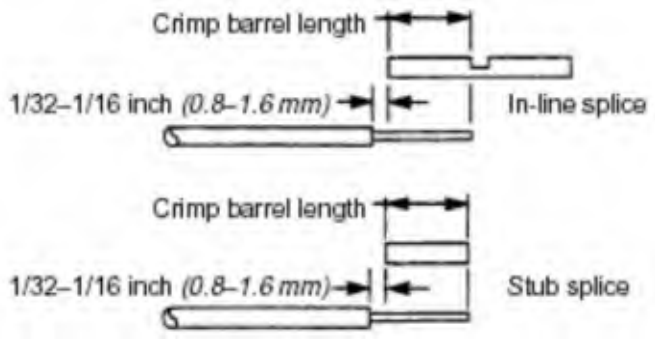

(d) Insert one of the multiple wires through each hole of the multiple-hole seal, and slide the sealing sleeve back over the multiple wires.

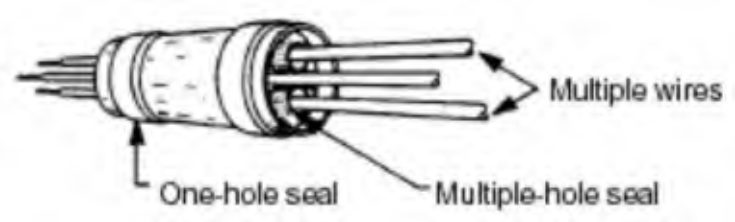

(e) Crimp the wires in the crimp splice

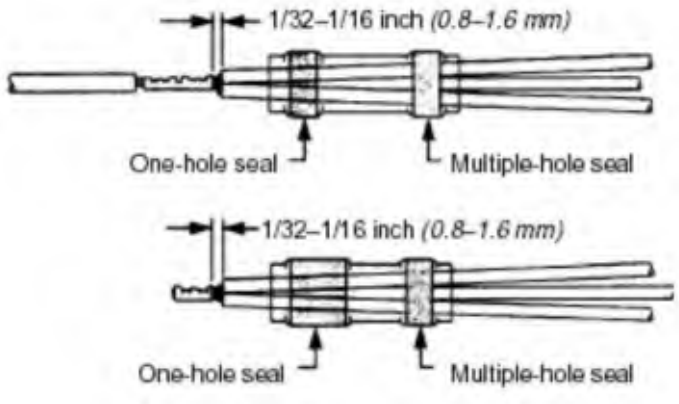

(f) Make sure the multiple wires do not become crossed between the multiple-hole seal and the crimp splice.

(g) Center the sealing sleeve over the splice area.

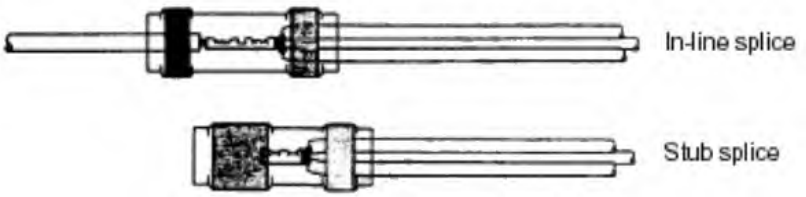

(h) Heat the sealing sleeve to shrink it and melt the seal as follows:

1. Use one of the heating tools listed in this chapter.
2. Heat the multiple-wire end first, until the multiple-wire seal melts and flows around and along the wire insulation.
3. Move the heat toward the single-wire or open end, shrinking the sleeve along the way.
4. Heat the second end until the seal melts and flows along the wire insulation or closes the open end.
5. Allow the assembly to cool undisturbed.
6. Inspect the completed sealed splice.

(3) Multiple-Wire to Multiple-Wire In-Line Splices

(a) Strip the wires to be spliced. If any conductor is to be folded back to increase the effective cross-sectional area, strip that wire to twice the specified strip length.

(b) The strip length for a particular crimp splice equals the length of the crimp barrel plus 1/32–1/16 inch (0.8–1.6 mm) as shown in Figure 16 below. For most AWG 12 and smaller crimp splices, the correct strip length is 5/16–11/32 inch (7.9–8.7 mm).

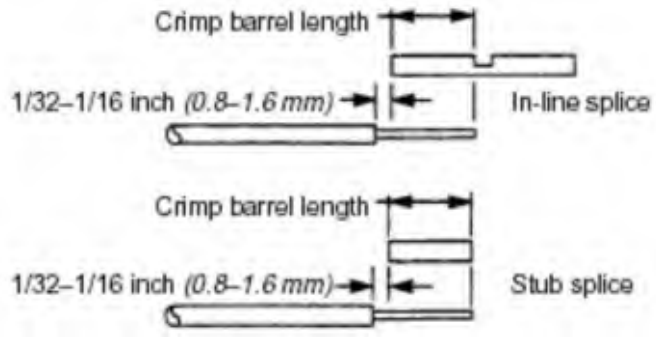

(c) Insert the multiple wires coming from one direction through the integral seal and sleeve, one wire per hole.

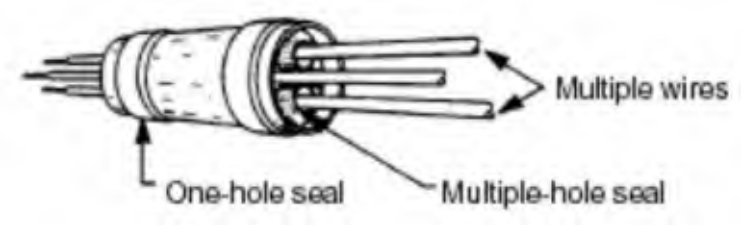

(d) Insert the multiple wires coming from the other direction through the separate seal, one wire per hole.

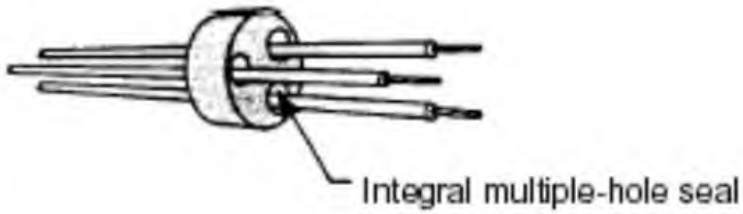

(e) Crimp the wires in the crimp splice as shown below.

(f) Make sure that the multiple wires do not become crossed between either one of the multiple-hole seals and the crimp splice.

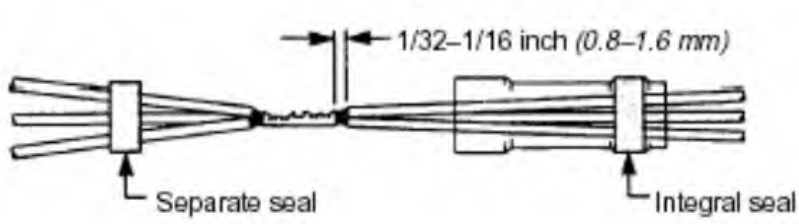

(g) Push the separate multiple-hole seal up against the crimp splice.

(h) Position the sealing sleeve over the splice and over the separate multiple-hole seal so that the separate seal is fully seated within the end of the sealing sleeve as shown.

(i) Squeeze the wires together to hold the separate seal against the splice while moving the sealing sleeve into position.

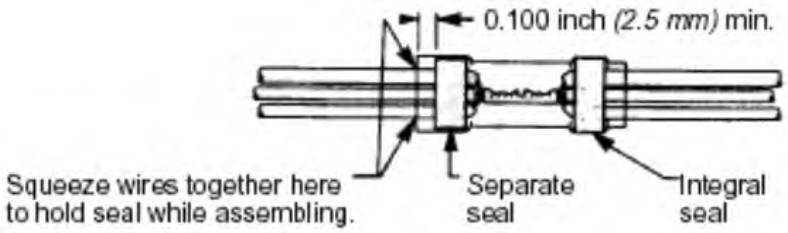

(j) Heat the sealing sleeve to shrink it and melt the seal as follows:

1. Use one of the heating tools listed in this chapter.
2. Heat the end with the separate seal first, until the seal melts and flows around and along the wire insulation.
3. Move the heat toward the end with the integral seal, shrinking the sleeve along the way.
4. Heat the end with the integral seal until the seal melts and flows along the wire insulation.
5. Allow the assembly to cool undisturbed.
6. Inspect the completed sealed splice.

(4) Inspection

(a) The sealing sleeve must be centered over the splice area so that the melted seal overlaps the wire insulation by at least 1 1/2 times the diameter of the wire insulation.

(b) The wire insulation must end at a point 1/32–1/16 inch (0.8–1.6mm) from the crimp splice.

(c) The sealing sleeve must be completely shrunk onto the splice area and wire insulation.

(d) The seals must be melted and must have flowed so as to lose their original shape

(e) If sealing a single wire, seal must have flowed along the wire insulation.

(f) If sealing multiple wires, melted sealing material must be visible between the wires where they exit from the sealing sleeve. Look between the wires to make sure that the center portion of the seal has melted.

(g) The free end of a stub splice must be completely sealed.

(h) The sealing sleeve must not be so discolored it prevents visual inspection of the splice (overheated condition).

Note: Sealant can be re-flowed, if necessary, by applying additional heat with the heating tool

(i) The sealing sleeve must not be cut or split.

(j) The wire insulation must not show signs of mechanical damage or overheating, such as cuts, tears, melting, or charring.

(5) Acceptable Splices

(a) Minimum Solder Flow - The termination is complete when the outer thermal indicator ring disappears at the ground lead/shield braid interface. The thermal indicator ring may remain opposite the interface area, but not in the fillet or ground lead area. The fillet must be clearly visible between the ground lead and shield.

(b) Maximum Solder Flow - The thermal indicator ring has disappeared. No traces of the thermal indicator ring are present. The fillet is clearly visible between the lead and shield. The joint area is visible despite slight browning of the sleeve.

(6) Unacceptable Splices

(a) Insufficient heat

1. Contour of solder band and temperature ring is readily visible.
2. Meltable inserts have not flowed.
3. Contour of braid and/or lead is obscured by solder.
4. Solder band has melted, losing appearance of band shape.
5. Thermal indicator ring is present in the wire/braid interface.
6. Meltable inserts have melted and flowed.
7. Braid contour is visible.

(b) Overheated

1. Joint area is not visible because of severe darkening of the outer sleeve.

2. Solder fillet is not visible along lead and shield interface.
3. Wire damaged outside of sleeve.

Table 20-0.2: Acceptable Heat Guns

	Convection					Infrared	
	Hot Air Blowers			Compressed Air		Heavy Duty	Medium Duty
	Steinel	Thermogun HG Gun	Thermogun HG Gun	Super Heater	HT-900B	IR-550	MiniRay
Model	HL1802E	501A 502A	751A-C 752A	AA-400 MKIII	HT900B HT920B	IR-550	IR-1759
Voltage	120V 230V	120V 230V	120V 230V	120V 240V	115V 230V	120V	120V
Temp. Range	120 to 1100 ºF	500 to 700 ºF	750 to 1000 ºF	700 to 975 ºF	550 to 920 ºF	N/A	N/A
Specification	UL/CSA Listed	UL Listed	UL Listed (752A only)	N/A	MIL-M-83521/5	N/A	N/A
Benefits	Bench mount or hand-held, variable temperature control.	Sturdy, versatile, bench mount or hand-held.	Sturdy, versatile, bench mount or hand-held.	Adjustable air flow & temp., light weight handle, auto power cut off switch.	Can be operated in the presence of potentially explosive atmosphere per MIL-STD-810.	Quiet, fast installation, energy efficient, foot switch, thermostatic switch to prevent overheating.	Quiet, fast installations, hand-held.
Typ. Applications	Solder-Sleeves, Heat shrink tubing.	Solder-Sleeves, Heat shrink tubing.	Solder-Sleeves, Heat shrink tubing.	Solder-Sleeves, Heat shrink tubing.	Solder-Sleeves, Heat shrink tubing.	Solder-Sleeves, Heat shrink tubing.	Solder-Sleeves, Heat shrink tubing.

5. Wire Crimping

Crimping is the process of joining a conductor to a pin or socket contact, ring, fork or spade tongue terminals by controlled compression and displacement of metal. In a good crimp joint, there is a mutual metal flow causing symmetrical distortion of wire strands and contact material. The circular mil area is slightly reduced and all voids are practically eliminated. Such a joint is similar to a cold weld. Mechanical strength and good electrical continuity are established.

Three types of crimping are used on this airplane:

1. Open Barrel Crimp
2. Closed Barrel Crimp
3. Crimped Sealed Splices

A. Wire Preparation

Suitable wire preparation is an important part of making a good crimp joint. There are two methods of acceptable wire stripping; mechanical and thermal. During the mechanical stripping process, extreme care must be taken to avoid nicking or removing wire strands otherwise a loss of tensile strength will result. Conversely, if the insulation is not completely removed, erratic values may be obtained. Heat stripping eliminates the danger of nicking strands. However, depending on the type of insulation being stripped, too much heat can cause actual charring of the insulation or decompose the insulation with the production of corrosive gases which react with the conductor plating. There is also a possibility of local annealing of the conductor. Too little heat can deposit an insulation film which can act as a lubricant. Any of these conditions can affect tensile results. Therefore, wire preparation requires control if proper tensile strength is to be achieved with a wire-contact combination.

A single fold back of the conductor is acceptable to increase the effective cross-section area of the conductor. Make sure the folded end of the conductor does not extend past the end of the contact barrel.

When stripping wire with any of the required tooling, observe the following precautions:

1. When using a hot-blade stripper, make sure the blades are clean. Clean the blades with a brass wire brush as necessary.
2. Make sure all stripping blades are sharp and free from nicks, dents, etc.
3. When using any type of wire stripper, hold the wire perpendicular to the cutting blades.
4. Make sure the insulation is clean-cut with no frayed or ragged edges; trim if necessary.
5. Make sure all insulation is removed from the stripped area.
6. Re-twist strands by hand, if necessary, to restore the natural lay and tightness of the strands.

(1) Allowable Wire Strand Damage

Strands of wire that are scraped, nicked or severed are considered to be damaged. Maximum allowable number of damaged strands in a wire is as follows:

Table 20-0.3: Maximum Number of Allowable Damaged Wire Strands

Number of Strands	Maximum Allowable Number of Strands that are Scraped, Nicked, or Severed
Less than 7	0
7 to 15	1
16 to 25	3
26 to 40	4
41 to 60	5
61 to 120	6
121 or more	6%

(2) Allowable Wire Strand Deformation

During insulation removal, wire strands should not be flattened, untwisted, buckled, kinked, or otherwise deformed. Wire strands disturbed during insulation removal that have been restored to their approximate original orientation and condition are acceptable.

(3) Allowable Wire Strand Separation

Strand separation (birdcaging) is acceptable if it does not exceed the lesser of

1. one strand diameter or
2. extend beyond the wire insulation outside diameter.

Strand separation (birdcaging) exceeding one strand diameter but that does not extend beyond the wire insulation outside diameter is acceptable.

(4) Unacceptable Wire Strand Condition

1. The general spiral lay of the strands has not been maintained.
2. Wire strands extend beyond the insulation outside diameter.
3. Wire strands are kinked.

(5) Allowable Insulation Damage

The insulation on stripped wiring should be neatly trimmed with no signs of pinching, pulling, fraying, discoloration, charring, or burning.

Insulation is acceptable if: from the gripping of mechanical strippers.

1. There is a slight uniform impression in the insulation.
2. Insulation thickness is not reduced by more than 20%.
3. Uneven or ragged pieces of insulation is less than 50% of the insulation outside diameter or 1.0 mm [0.039 in] whichever is less.
4. Insulation is discolored from the thermal stripping operation.

(6) Unacceptable Insulation Damage

1. There are any cuts or breaks.
2. The insulation is charred.
3. The insulation is melted into the wire strands.
4. Insulation is discolored from the thermal stripping operation.

B. Crimping Configurations

Open barrel terminals used on this aircraft are the fold-over tab type terminals. Closed barrel terminals are Mil-Spec terminals of various sizes that use the four indent crimp principal. Crimping configurations range from the open barrel terminal fold-over tab type of crimp to the closed barrel single indent crimp, the dual indent crimp, the three indent crimp, hex crimps, and the MIL standard four indenter crimp. Crimping may be done using hand tools, power tools, or automated power tools. Inspection holes in each contact allow visual verification that the conductor is properly positioned in the crimp barrel.

A terminal has three major sections: Mating, Transition and Crimping. The Mating section is the section of the terminal that mates, or becomes the interface, with the other half of the connection. This section is designed to mate with a terminal of the opposite gender and to perform in a certain manner.

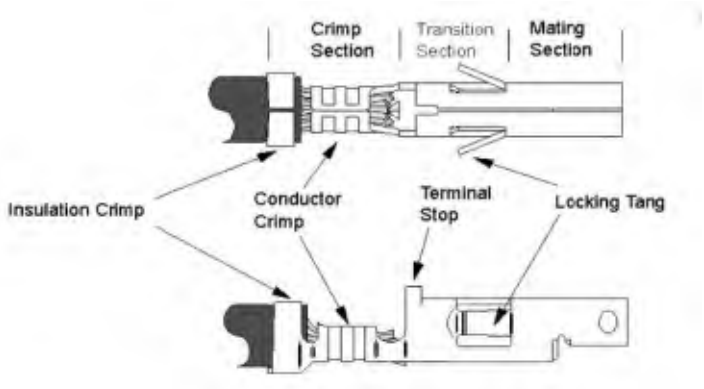

C. Closed Barrel Crimps

Crimp indents must be centered between the wire entry shoulder of the crimp barrel and the inspection hole / wire exit shoulder. Crimp indents must not encroach on the wire entry shoulder or the inspection hole / wire exit shoulder.

Crimped contacts may not encroach upon the wire insulation. Maximum insulation clearance for all gauge wire is one stripped wire diameter.

The wire strands must be visible in the inspection hole, indicating that the conductor is properly inserted. Preferably, the wire end shall be bottomed in the crimp barrel.

D. Stamped and Formed Closed Barrel Insulated Ring, Fork and Spade Tongue Terminals

The wire insulation must extend into the insulation crimp barrel and bellmouth. The crimp must be evenly formed and contact the wire insulation providing support without damage to the insulation. The conductor strands must protrude slightly and evenly past the end of the conductor crimp area. The crimp must be centered on the conductor crimp area with all conductor strands contained therein. The bellmouth must be visible at each end of the terminal.

6. Coaxial Cable

The coax connector manufacturer provides assembly instructions for preparing the coax to be stripped and terminated to the connector. These instructions must be used. In general, all pieces must remain as concentric as possible. Critical to the electrical and mechanical function of the assembly are the concentric relationship of the outside diameter (OD) of the cable center conductor, the thickness of the dielectric and the inside diameter (ID) of the connector body and cable shielding. Insulation integrity is important to preclude the shorting of shields to each other or to the center conductor.

Coaxial cable is manufactured using different shield configurations that give different percentage of coverage values. Some cable is identified as double shield. When the double shield is a foil wrap rather than a second braid, the foil is not used during the mechanical attachment and the cable is assembled as a single braid cable.

A. Stripping Coaxial Cable

Stripped coaxial cable must have:

Smooth clean cut with no jagged edges.
No burn marks or damage to the insulation or dielectric,
The braid/shield must be cut even with no long strands.
The braid must lie smooth and flat after the cut with no damaged or loose pieces.

Table 20-0.4: Maximum Allowable damaged or Missing Braid COAX

Number of Strands	Maximum Allowable Strands[1] Scraped, Nicked, or Severed Classes 1, 2, 3		
	Shield Braid	Center conductor	
		Crimped Terminations	Soldered Terminations
Less than 7	0	0	0
7 to 15	1	0	1
16 to 25	3	0	2
26 to 40	4	3	3
41 to 60	5	4	4
61 to 120	6	5	5
121 or more	6%	5%	5%
Note 1: For plated wires, a visual anomaly that does not expose basis metal is not considered to be strand damage.			

B. Straight Coaxial Connections

Crimping of contacts to coaxial cable must:

have the crimp centered on the crimp area of the terminal.
have no damage to the terminal of the dielectric.
have equal compression on all crimp surfaces.

The following are acceptable:

The crimp is not centered on the crimp area of the terminal but does not cause damage to the terminal.
The dielectric does not enter the barrel of the terminal.
The gap between the dielectric and the terminal meets the manufacturer's specifications. In the absence of manufacturer's specifications, there must be no gap.

C. Right Angle Coaxial Connections

The center conductor length must:

extend beyond the edge of the slotted terminal no greater than 1 diameter of the center conductor.
not contact the connector housing.
have the dielectric extend into the connector cavity with an air gap maintained between the slotted terminal and the dielectric.

D. Installation of Coaxial Connectors

Follow the connector manufacturer's assembly instructions and the following criteria.

1. Fully seat the center pin into the housing.
2. Ensure the center pin is not bent.
3. Ensure the ferrule is butted up to the connector body. If a gap exists, the distance between the connector body and the start of the crimp must be less than 0.030 inch.
4. Ensure the connector and/or the ferrule don not turn or move on the cable after crimping.
5. Install a two inch piece of heat shrink tubing over the connector/cable interface. the heat shrink tubing should overlap the connector body as much as practicable without interfering with the coupling nut.

E. Soldering

Soldering is the process of joining two metals by the use of a tin/lead solder alloy. Reliable soldered connections result from control of tools, materials, processes, work environment, along with proper training, and careful workmanship.

(1) Check tools for proper condition, operation, performance, and cleanliness.

(2) Preparation of conductors:

(a) Insulation Removal - Make sure to use stripping tools that are the correct size and in correct adjustment for the conductor.

Note: After insulation removal, the remaining conductor insulation shall not exhibit any damage such as nicks, cuts, or charring. Conductors with damaged insulation shall not be used. Scuffing from mechanical stripping or slight discoloration from thermal stripping is acceptable. The conductor shall not be nicked, cut, or scraped to the point that base metal is exposed. Part leads and other conductors that have been reduced in the cross-section area shall not be used. Smooth impression marks (base metal not exposed) resulting from tool holding forces is acceptable.

(b) Heat Shrink Tubing - Many of the procedures require the use of heat shrink tubing over solder joints. If a single lead is soldered to a switch terminal, the tubing shall be cut and applied over the wire lead before the soldering process. When soldering is complete, slide the tubing over the soldered joint and heat until shrunk, ensuring that shrinkage does not place stress on the conductor or the soldered joint.

(c) Wire Lay - If disturbed, the lay of wire strands shall be restored as nearly as possible to the original lay. The conductor shall be cleaned following restoration to the original lay.

(d) Tinning of Conductors - The portion of stranded or solid conductors or part leads that will eventually become a part of the finished solder connection shall be tinned with solder and cleaned prior to attachment. Immersion of conductors in a solder bath shall not exceed 5 seconds. Liquid flux may be used. The flux shall be applied so that it does not flow under the insulation except for traces carried by wicking. Precautions shall be taken when re-moving flux with a cleaning solvent to prevent excess solvent from flowing under the conductor insulation.

Hot tinning of solid conductors and part leads shall not extend closer than 0.5mm (0.020 inch) to part bodies, end seals, or insulation unless the part configuration and mounting configuration dictate. If closer tinning is required, the part body, end seals, or insulation shall be inspected for damage after tinning and the results recorded.

Solder pots or hand tinning with a soldering iron shall be used. The solder pot may be dumped on an established schedule, based on usage, in lieu of analysis. When the solder produces a dull, frosty, or granular appearance on the work, the pot shall be immediately removed from use.

Solder pots used for tinning operations shall be maintained at required temperatures and monitored before and after each tinning operation.

Make sure that the tinned surfaces exhibit 100 percent coverage. Wire strands shall be distinguishable.

(3) Preparation of Printed Wiring Boards (PWB), Terminals, and Solder Cups

(a) Termination areas shall have been tinned with hot-coated tin-lead solder or hot re-flowed electro-deposited tin-lead solder prior to mounting the parts. Final solder terminations shall not be made to any PWB or solder cup that has not had the gold re-moved from the termination area.

(b) Terminals and solder cups shall be examined for damage and cleaned prior to the attachment of conductors. Terminals and solder cups shall not be modified to accommodate improper conductor sizes.

(c) The PWB's shall be cleaned and demoisturized within 8 hours prior to their initial exposure to soldering temperatures. The PWB's may be stored for longer periods of time in a controlled moisture-free atmosphere. De-moisturizing may be accomplished by an oven bake at 93°C (200°F) ±5.5°C (±10°F) for a minimum of 4 hours for a printed wiring assembly (PWA) or 2 hours for a bare PWB, or by a vacuum bake at a lower temperature. The time in and out of the oven or chamber shall be recorded.

(4) Solder

(a) All solder used for tinning and solder connections shall conform to ANSI/J-STD-006. Flux-cored solder shall be either composition SN60 or SN63 containing flux types R or RMA, or equivalent. For all soldering applications where adequate

subsequent cleaning is not practical, only solder containing flux type R shall be used. Solid solders (no flux) for use in solder pots shall be of the same composition.

(b) For soldering operations where connections are to be subsequently reheated, the use of high temperature solder alloy is permitted.

(5) Flux

(a) All fluxes used for tinning and soldering operations shall conform to ANSI/J-STD-004. Process documentation shall describe the types of fluxes, where each is used, and the necessary precautions.

(b) Flux types R, RMA, or equivalent shall be used. For all fluxing applications where adequate subsequent cleaning is not practical, only type R, or equivalent, flux shall be used. Liquid flux used with flux-cored solder shall be chemically compatible with the solder core flux and with the materials with which it will come in contact.

(6) Soldering To Terminals

(a) There shall be no motion between conductors and the terminal during soldering or while the solder is solidifying.

(b) Thermal Shunts shall be used where heat during the soldering operations may degrade conductors, insulation, parts, or previously soldered connections.

Note: Do not use pressurized air to cool solder joints. Connections shall be cooled at room temperature only.

(7) Solder Application

(a) The molten solder shall flow around the conductor and over the termination area.

(b) A fillet of solder shall be formed between the terminal and each side of the conductor except for cup terminals.

(c) The solder shall form a fillet between the conductor and the cup entry slot. Solder along the outside surface of the solder cup is permissible to the extent that it approximates tinning and does not interfere with the assembly or function of the connector.

(d) Flow (wicking) of solder along the conductor is permitted. Solder shall not make the presence of the individual wire strands indistinguishable.

(e) For soldering operations where terminals are to be subsequently reheated, the use of high temperature solder is permitted.

(8) Solder Cleaning

(a) Interim Cleaning- Residues shall be removed during interim cleaning within 1/2 hour after soldering by applying an approved solvent as specified in paragraph 6.13. Solvents shall be applied in a manner that will minimize wicking of the solvent under conductor insulation and prevent its entry into the interior of parts.

(b) Final Cleaning - Mechanical means such as agitation or brushing may be used in conjunction with the solvents. The cleaning solvents and methods used shall have no deleterious affect on the parts, connections, or materials being cleaned. Ultrasonic cleaning shall not be used for cleaning assemblies that contain electronic

parts. After cleaning, there shall be no visible evidence of flux residue or other contamination when examined.

(c) Cleaning of Conformal Coated Assemblies - Conformal coated assemblies that require rework shall not be submerged in cleaning solvents. Cleaning shall be limited to the area of rework.

Table 20-0.5: Soldering Solvents

Solvent	Specification
Ethyl Alcohol	O-E-760, Types III, IV, or V
Isopropyl Alcohol	TT-I-735
Butyl Alcohol, Secondary	ASTM-D1007
Methyl Alcohol	O-M-232, Grade A
Water	1 megohm-cm, minimum resistivity

(9) Inspection:

(a) Acceptance Criteria:

(i) The appearance of the solder joint surface shall be smooth, nonporous, undisturbed and shall have a finish that may vary from satin to bright depending on the type of solder used.

(ii) Solder shall wet all elements of the connection. The solder shall fillet between connection elements over the complete periphery of the connection.

(iii) Complete wetting.

(iv) The presence of stress relief in leads or conductors to provide freedom of motion between points of constraint.

(v) Exposed ends of leads on straight-through terminations after soldering shall not be cause for rejection if the Printed Wiring Assembly (PWA) is to be conformally coated.

(b) Rejection Criteria - Conductors and Parts

(i) Nicks, cuts, or charring of insulation (slight discoloration from thermal stripping is acceptable).

(ii) Improper insulation clearance.

(iii) Improper tinning of part leads or conductors.

(iv) Separation of wire strands (birdcaging).

(v) Part improperly supported or positioned (polarity, centering, planarity).

(vi) Cut, nicked, stretched, or scraped leads or wires exposing base metal.

(vii) Flux residue or other contaminants.

(viii) Improper wrap or stress relief.

(ix) Improper positioning of lead on solder pad for lap terminations.

(x) Epoxy on unsleeved glass parts.

(xi) Unsupported hookup wires in excess of 2.54 cm (1 in.) length.

(xii) Improper lead bending or cutting.

(xiii) Splice used to repair broken or damaged conductor.

(xiv) Part leads used as terminals except when designed as a terminal.

(xv) Terminals or wires modified to fit.

(xvi) Improper clinch length.

(xvii) Improper lead protrusion through PWB.

(xviii) Part lead more than 0.25 mm (0.010 in.) above solder pad on lapped termination.

(xix) A part obscuring the solder termination of another part, unless interim inspection was performed.

(xx) No filler wire in functional PTH's on double sided PWB's when coupon is not evaluated.

(c) Rejection Criteria - Solder Connections

(i) Cold solder connection.

(ii) Overheated solder connection.

(iii) Fractured or disturbed solder connection.

(iv) Poor wetting.

(v) Blowholes, pinholes, and voids.

(vi) Excessive solder (solder in the bend radius of axial leaded parts in PTH's is not cause for rejection provided the lead is properly formed, the topside bend radius is discernible, and the solder does not extend to within 1 lead diameter of the part body or end seal).

(vii) Insufficient solder.

(viii) Splattering of flux or solder on adjacent areas.

(ix) Rosin solder joint.

(x) Contamination (e.g., lint, flux, dirt).

(xi) Dewetting.

(xii) Non-wetting.

(xiii) Part body (meniscus) in solder joint.

(d) Rejection Criteria - Printed Wiring Boards (PWB)

(i) Separation of conductor pattern from substrate.

(ii) Burns on substrate.

(iii) Discoloration that bridges uncommon conductors (e.g., measling, halo effect).

(iv) Solder peaks, icicles, and bridging on conductor patterns.

(v) Cut, nicked, gouged, or scraped printed wiring conductor that exposes base metal (except for vertical edges).

(vi) Cut, nicked, gouged, or scraped substrate that exposes glass fibers.

(vii) Delamination of the PWB substrate.

(viii) Solder mask tackiness, flaking, or separation from the substrate or conductors.

(ix) Repaired or damaged printed wiring conductor pattern.

(x) Blisters.

This Page Intentionally Left Blank

CHAPTER 21

Environmental Systems

This Page Intentionally Left Blank

List of Effective Pages

Chapter/Section	Page Number	Effective Date
21-Title	Page 1	17 Aug 2022
21-Title	Page 2	02 Jan 2020
21-LOEP	Page 1	14 July 2025
21-LOEP	Page 2	02 Jan 2020
21-TOC	Page 1	02 Jan 2020
21-TOC	Page 2	02 Jan 2020
21-00	Page 1	02 Jan 2020
21-00	Page 2	02 Jan 2020
21-00	Page 3	02 Jan 2020
21-00	Page 4	02 Jan 2020
21-00	Page 5	02 Jan 2020
21-00	Page 6	02 Jan 2020
21-00	Page 7	02 Jan 2020
21-00	Page 8	02 Jan 2020
21-30	Page 1	14 Jul 2021
21-30	Page 2	14 July 2025
21-30	Page 3	14 July 2025
21-30	Page 4	14 July 2025
21-30	Page 5	14 July 2025
21-30	Page 6	14 July 2025
21-50	Page 1	02 Jan 2020
21-50	Page 2	02 Jan 2020

This Page Intentionally Left Blank

CHAPTER 21

Table of Contents

List of Effective Pages ..... 21-LOEP / Page 1
Table of Contents ..... 21-TOC / Page1

Paragraph **Page Number**

Air Conditioning

1. General ..... 21-00 / Page 1
    A. Bleed Air Inflow System ..... 21-00 / Page 1
    B. Cabin Pressurization Control System (CPCS) ..... 21-00 / Page 2
    C. Fresh Air System ..... 21-00 / Page 3
    D. Door Seal ..... 21-00 / Page 3
    E. Vapor Cycle Air Conditioning (VCS) ..... 21-00 / Page 3
    F. ECS Controls ..... 21-00 / Page 4

Pressurization Control

Figure 21-30.1: WK21000001-1 Cabin Temperature (SN: K003-K010) ..... 21-30 / Page 1
Figure 21-30.2: WK21002001B- Cabin Temperature (SN: K011 and On, and K003-K010 with SB-0017) (Sheet 1 of 2) ..... 21-30 / Page 2
Figure 21-30.3: WK21000002 - 1 Mass Air Flow (Sheet 1 of 2) ..... 21-30 / Page 3
Figure 21-30.4: WK21300001- 1 Pressurization System ..... 21-30 / Page 5

Cooling

Figure 21-50.1: WK21500001- 2 Air Conditioning System (Sheet 1 of 2) ..... 21-50 / Page 1

This Page Intentionally Left Blank

AIR CONDITIONING

1. General

Heating, cooling, fresh air, and pressurization systems in this airplane are for the safety and comfort of the crew and passengers.

Heating of the cabin is done by ducting in cooled bleed air from the engine. Ambient air is mixed with the bleed air in an air-to-air heat exchanger to cool it. The amount of conditioned bleed air let into the aircraft cabin is controlled by the crew of the aircraft. This system also provides the air supply for cabin pressurization and for ventilation when the airplane is on the ground or for unpressurized flight.

The airplane cabin is cooled using a condenser, evaporator, and electrically driven compressor. The blower and evaporator are under the aft passenger seats. The compressor and condenser are aft of the pressure bulkhead and are accessible through the pressure bulkhead access panel.

The cabin pressurization system has two outflow valves, a mass flow valve, an altitude and rate selector, a vacuum solenoid valve, a surge tank, plumbing, and wiring. The two outflow valves are mounted with the controller on the pressure bulkhead access panel behind the aft passenger seats.

Left and right side panel ducts, overhead panel ducts, a windshield defrost outlet, individual seat outlets, and the various system controls are used to distribute conditioned air throughout the cabin.

A. Bleed Air Inflow System

The primary bleed air circuit first passes through a stainless steel ram air cooled “pre-cooler” heat exchanger. The air then passes through a high pressure/temperature bleed air shutoff valve. Downstream of the shutoff valve is a Mass Flow Control Valve/Jet Pump which takes hot high pressure bleed air and induces ambient air flow by a Venturi function. The jet pump gets information from a mass flow controller through a hot wire anemometer mass flow sensor and adjusts bleed airflow accordingly. There are different flow settings for ground, normal flow, and high flow (heating). The ambient air induction helps to reduce the temperature of the bleed discharge air during lower altitude operation. At high altitude (approximately 18000 MSL and above), the ambient air pressure is too low to mix with the bleed air and the cooling is done with the bleed air heat exchangers. The Jet Pump Valve is configured for 3 settings (OFF, LOW and HIGH) flow (0, 5 lb/min, and 8 lb/min respectively).

(1) Bleed Air Temperature Control/Heating
Downstream of the bleed air jet pump, air is either directed through the 2nd stage heat exchanger or bypassed, depending on the position of the Temperature Control Valve (TCV). The system controller sets the position of the TCV based on a combination of the downstream duct temperature sensor input and the cabin temperature sensor inputs. In addition, the duct over-temperature sensor contains a switching function that will tell the

crew of a duct over-temperature situation, automatically forcing the TCV into the “full cold” setting (bleed air routed entirely through the heat exchanger).

(2) Emergency Pressurization Inflow Circuit
A secondary bleed air inflow circuit is available in an emergency. The emergency circuit is isolated from the primary circuit by a bleed air shutoff valve and unidirectional stainless steel check valves. The circuit adds a level of redundancy to the inflow system in a bleed air valve failure in the primary circuit. The system is selectable manually by the crew.

B. Cabin Pressurization Control System (CPCS)

The cabin pressurization system has a controller and two outflow valves. This system does not require a bleed air reference line. The system is integrated with the avionics package via ARINC 429 and requires no pilot interaction such as entering the landing field elevation, as this function is automatic. The system contains mechanical functions to maintain lower than a 15000 ft MSL cabin altitude in the event of any probable system failures and does not depend on software to maintain a safe cabin altitude. The maximum cabin differential pressure is 6.6 PSID, which corresponds to approximately a 9,700 ft. cabin altitude at the maximum operating altitude of 34,000 ft. MSL. The system also contains a mechanical maximum cabin pressure differential relief valve set at 6.8 PSID. The outflow valves incorporates mechanical functions to prevent a negative cabin pressure differential. The software only controls the “Minor” system level functions, including the cabin pressure rate of change.

(1) CPCS Aircraft Interface, Displays, and Warnings
The electronic aircraft interface provides for an interface to the FMS, flight warning system, serial I/O, and aircraft discrete signals. The FMS interface supplies an ARINC 429 interface so that the pressurization system can communicate with the aircraft flight management system. The information exchanged with the FMS lets the pressurization system controller correctly implement the Autoschedule algorithm. The aircraft discrete signals let the controller determine the identity of the present aircraft application and the present state of the aircraft, such as, on the ground, takeoff, etc. This information is used by the control logic to correctly implement the Autoschedule algorithm. The BIT routines of the control logic give several warning signals that the aircraft may display on the flight warning system. The serial I/O gives access to controller operational data that is useful for cabin pressurization system maintenance. The pressurization system gives several ARINC outputs to the E1000 avionics suite:

CPCS ARINC Outputs

Label	Parameter
127	Selected Landing Altitude (at 29.92 inHg baro)
150	Cabin Altitude Rate
151	Cabin Altitude
152	Cabin Differential Pressure

CPCS ARINC Outputs

Label	Parameter
203	Altitude (At 29.92 inHg baro)
204	Corrected Altitude
206	Computed Airspeed
235	Baro Correction (inHg) #1
270	Discrete Switch Information
301	Calculated A/C Altitude (at 29.92 in Hg baro) (Using Internal Transducers)
302	Software Part Number

(2) High Altitude Warning Signal
The High Altitude Warning signal is a warning to the aircraft that the controller is commanding the cabin to a higher altitude than the maximum cabin cruise altitude because of a High Altitude Take Off (HATO) or High Altitude Landing (HAL) condition. The High Altitude Warning signal is intended for use in suppressing the cockpit High Altitude warnings while the aircraft is engaged in high altitude landing and takeoff operations.

C. Fresh Air System

As shown in the system schematic, a fresh air circuit is available during unpressurized operations and ground/taxi phase. In addition, this circuit will help with smoke clearing operations if there is an emergency resulting in smoke in the cabin. The fresh air circuit is isolated with a check valve.

D. Door Seal

Bleed air is used to inflate the door seal. Bleed air is taken off of the same circuit as the de-ice boots and passed through a pressure regulator which is on the aft side of the firewall. The door seal is operated by the pilot using an electrically actuated solenoid valve. The door has a built in vent valve that deflates the door seal when the door latch is operated. This permits opening of the door from either inside or outside the airplane in an emergency.

E. Vapor Cycle Air Conditioning (VCS)

The vapor cycle air-conditioning system uses refrigerant R134a to cool the airplane cabin. The major components of the air conditioning system are a receiver/dryer, expansion valve, evaporators, and compressor condenser module. The compressor and condenser fan on the air-conditioning system is driven by a single electric motor. The fan pulls air from the tail-cone area over the compressor assembly (for motor cooling) and then through the condenser coil where it is sent overboard. If the generator fails, the VCS will be automatically disabled.

The receiver/drier stores liquid refrigerant under pressure. The drier portion of the assembly removes any traces of moisture that may have accumulated in the system. Liquid refrigerant flows from the receiver drier through the expansion valve where the refrigerant pressure is reduced, letting it spray into the evaporator. At the same time, a blower driven by an electric motor passes air over the evaporator. This air is cooled since heat is removed from the air by the evaporation of the refrigerant in the evaporator. The evaporator produces water due to condensation which drains overboard through a line attached to the evaporator condensate drain. The evaporators contain a “freeze switch” that will cut system power to prevent freezing water in the evaporator coil.

The refrigerant leaves the evaporator as a gas. The compressor, raising its pressure and temperature, pumps this gas. This high temperature gas then flows to the condenser. Cooling air, driven by another electric blower motor, passes over the condenser, cooling and therefore condensing the refrigerant to a liquid. The liquid refrigerant then enters the receiver/drier, repeating the process.

The plumbing, which connects the compressor, condenser and the evaporators, is rubber-based hoses with a nylon barrier. Fittings are either "o-ring" type or use flared connections. Sealant is used on the fitting mating surfaces to prevent refrigerant leaks. The two R134a service valves are sized differently to avoid incorrect cross connecting when gaining access to the plumbing for system recharging. The system has a “binary pressure switch” that will cut power to the compressor module if there is a system overpressure.

F. ECS Controls

The ECS is controlled by the climate control panel and by switches in a panel within easy reach of the pilot.

The climate control panel has a three position fan control switch (OFF, LOW, and HIGH), a temperature rheostat, and “AIR COND ON”, “DEFROST ON”, and “GROUND FRESH AIR” switches.

The switch panel has the “PRESS AIR ON” switch which powers the bleed air inflow system and CPCS controller, the “HI PRESS ON” switch which engages the higher 8 lb/min mass flow from the jet pump flow control valve, the “EMERG PRESS ON” switch which opens the emergency pressurization shutoff valve, and the “DUMP VALVE ON” switch which engages the emergency dump function of the outflow valves.

Figure 21-0.1: Environmental Control System

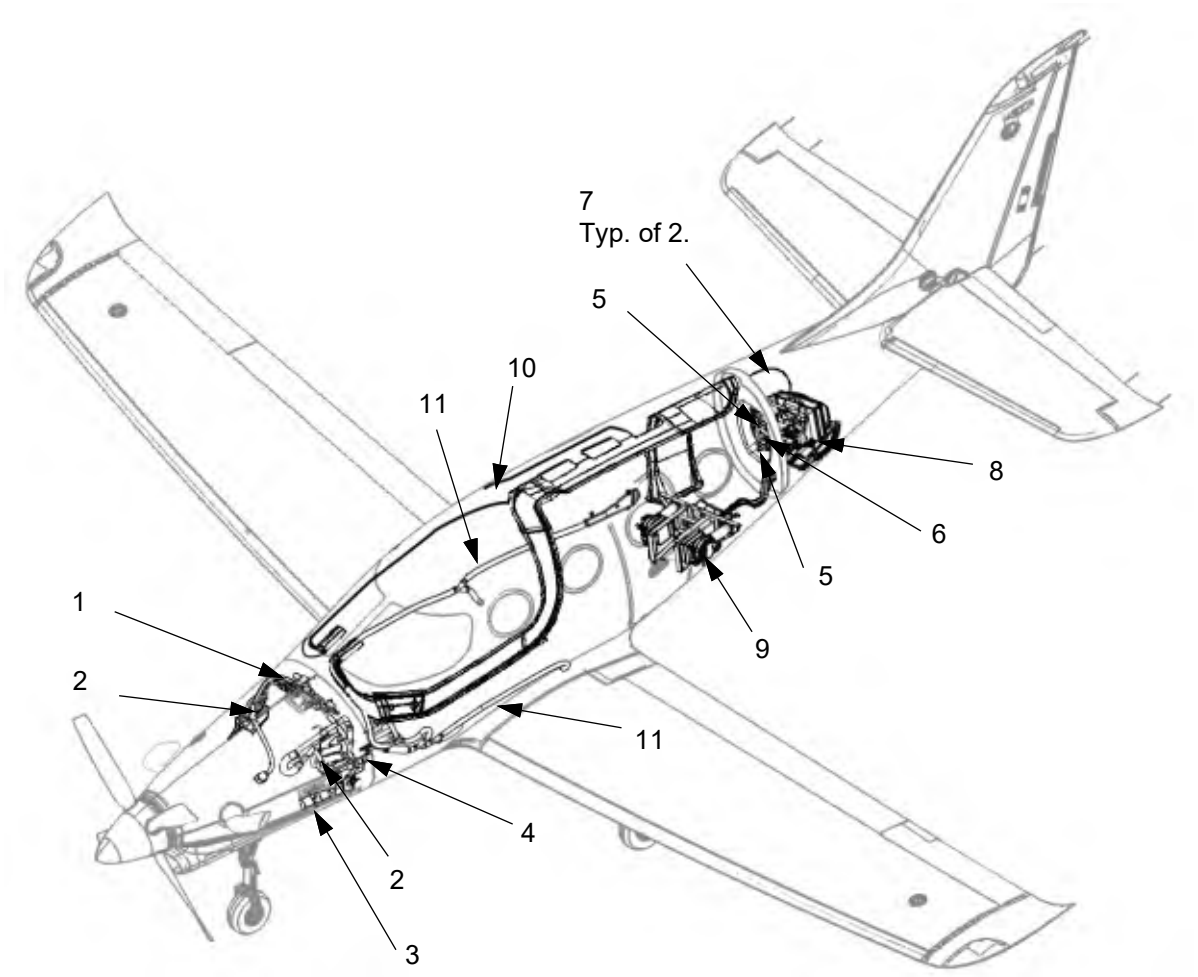

LEGEND

1. Mass Flow Valve
2. Intercooler
3. Fresh Air Fan
4. Pressure Circulation Manifold
5. Outflow Valve
6. Pressurization Controller
7. Pitot Static Port
8. Compressor Module
9. Evaporator Module
10. Cold Air Ducting
11. Hot Air Ducting

Figure 21-0.2: ECS Schematic (Sheet 1 of 2)

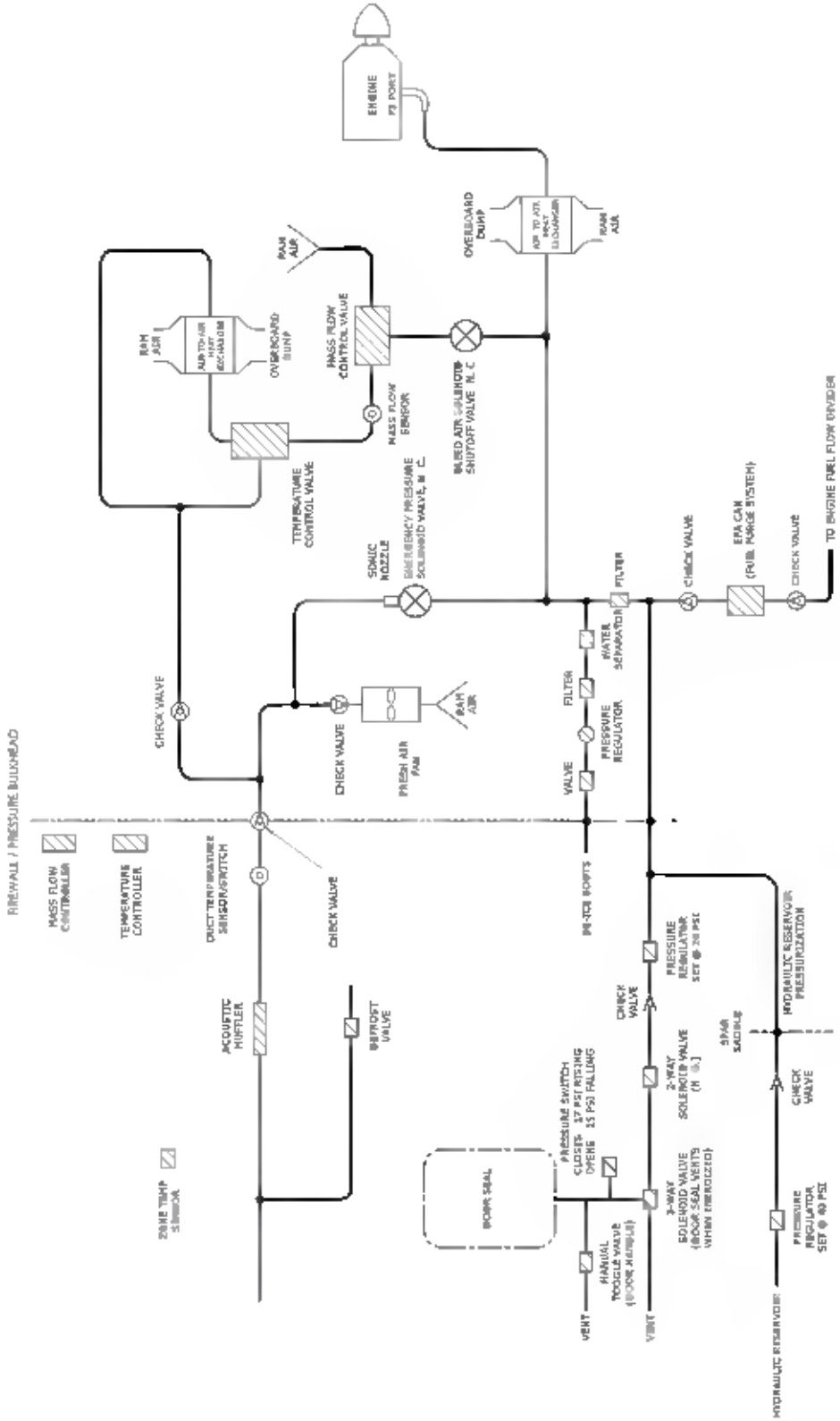

Figure 21-0.2: ECS Schematic (Sheet 2 of 2)

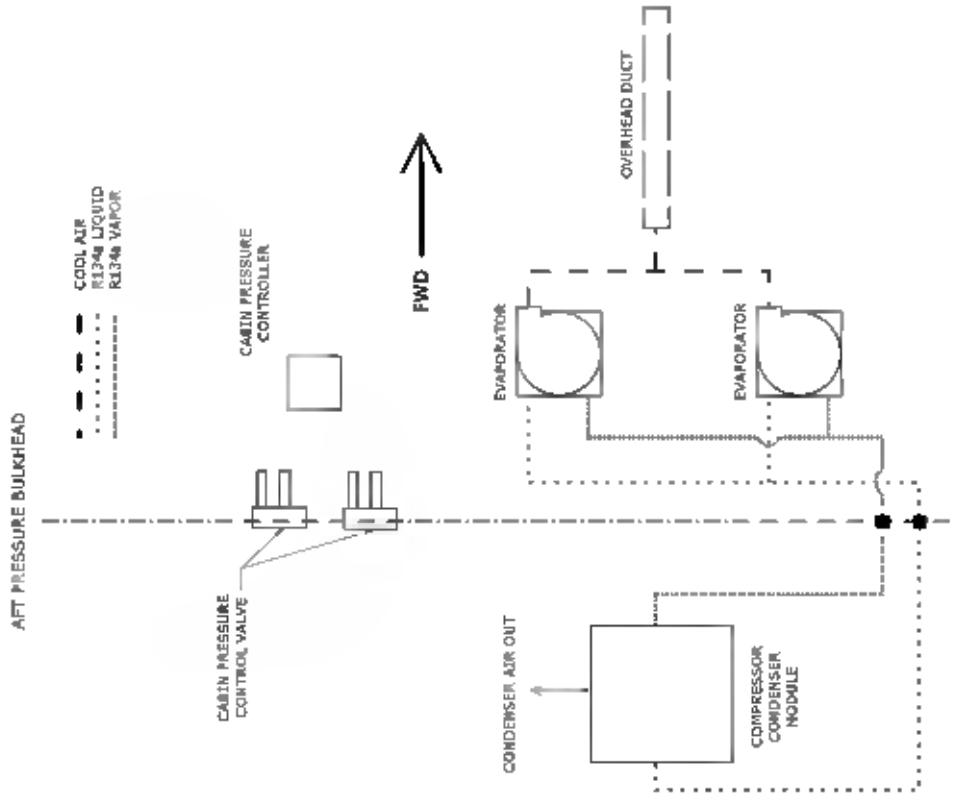

This Page Intentionally Left Blank

Figure 21-30.1: WK21000001-1 Cabin Temperature (SN: K003-K010)

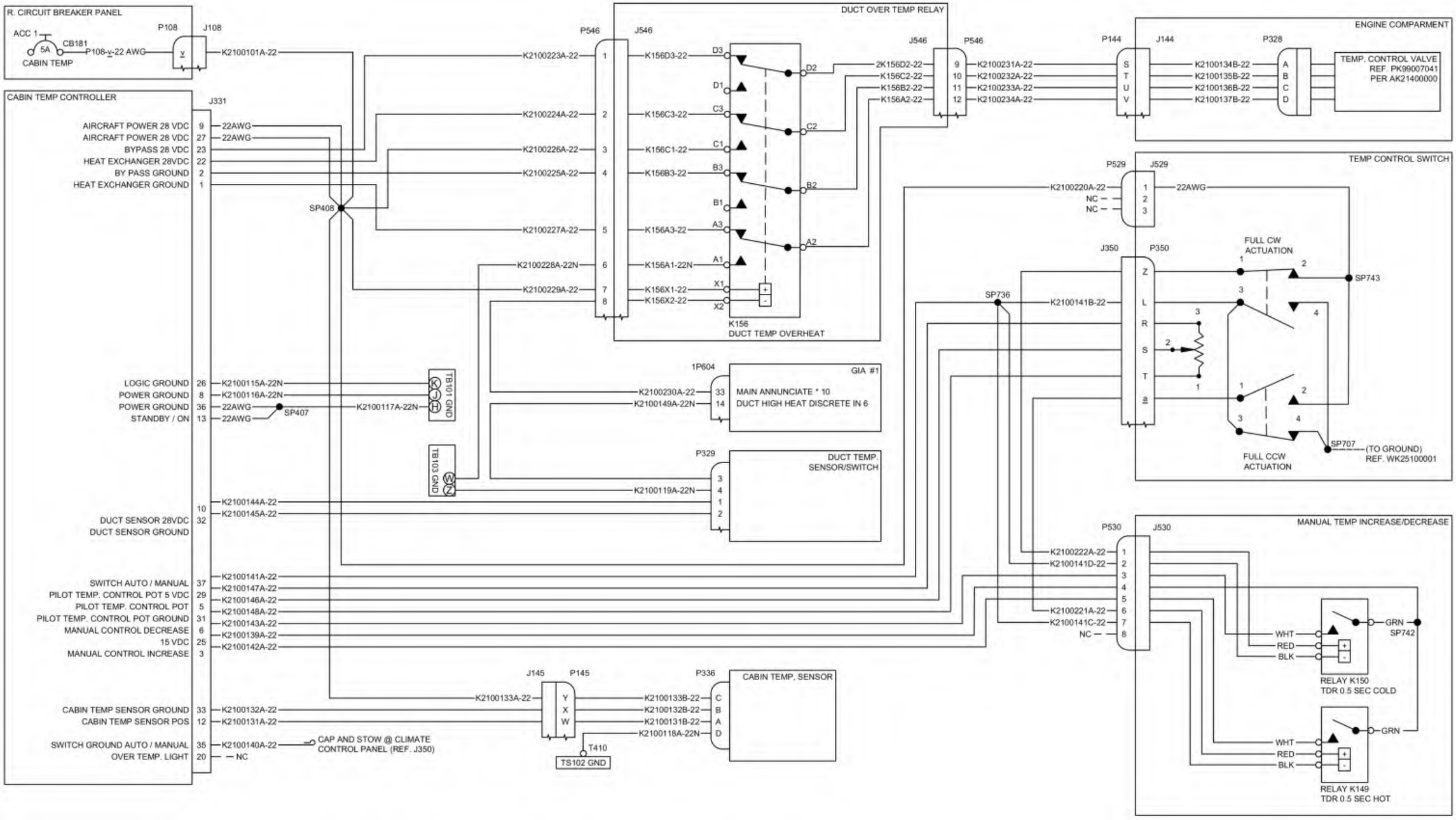

Figure 21-30.2: WK21002001B- Cabin Temperature (SN: K011 and On, and K003-K010 with SB-0017) (Sheet 1 of 2)

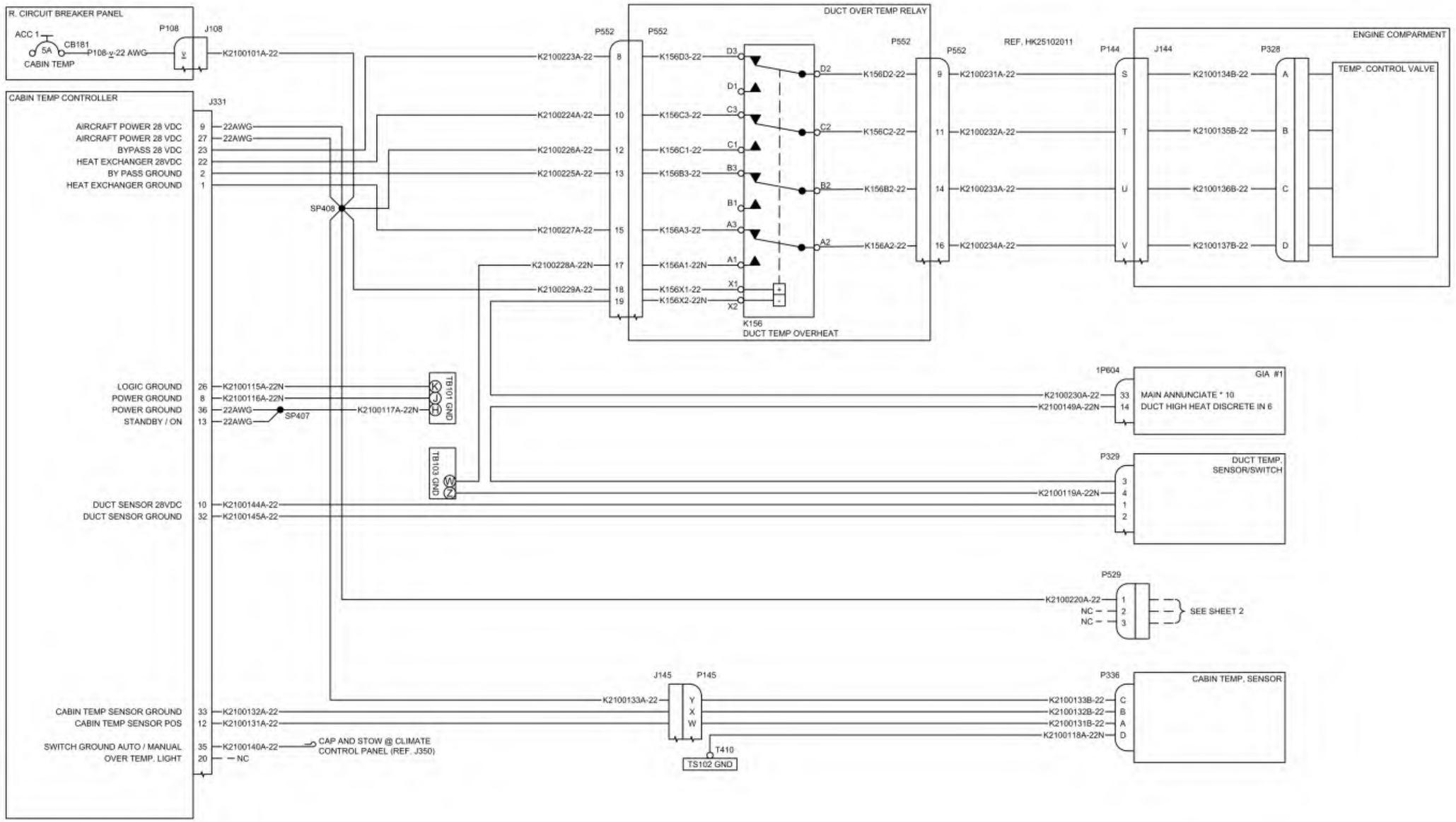

Figure 21-30.2: WK21002001B- Cabin Temperature (SN: K011 and On, and K003-K010 with SB-0017) (Sheet 2 of 2)

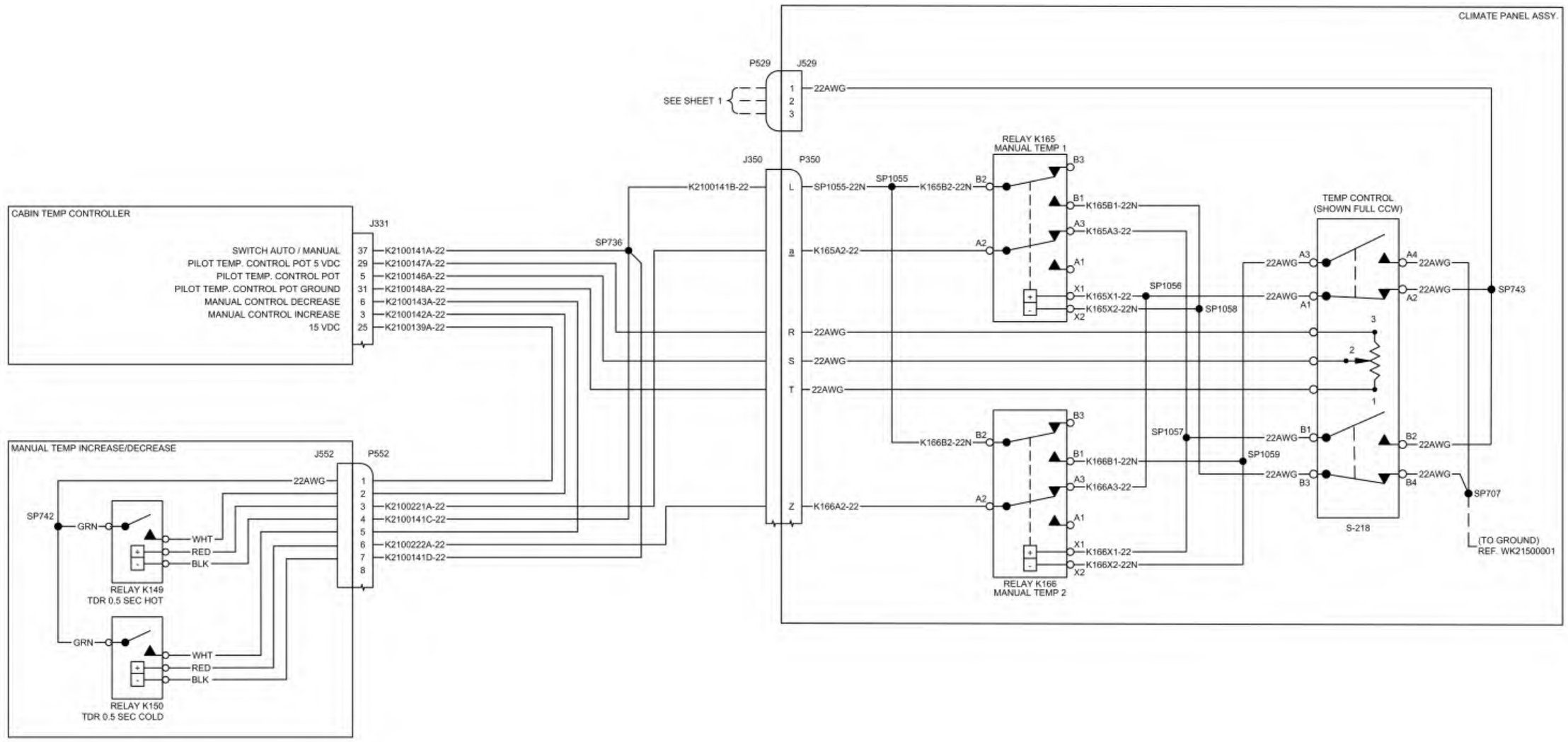

Figure 21-30.3: WK21000002 - 1 Mass Air Flow (Sheet 1 of 2)

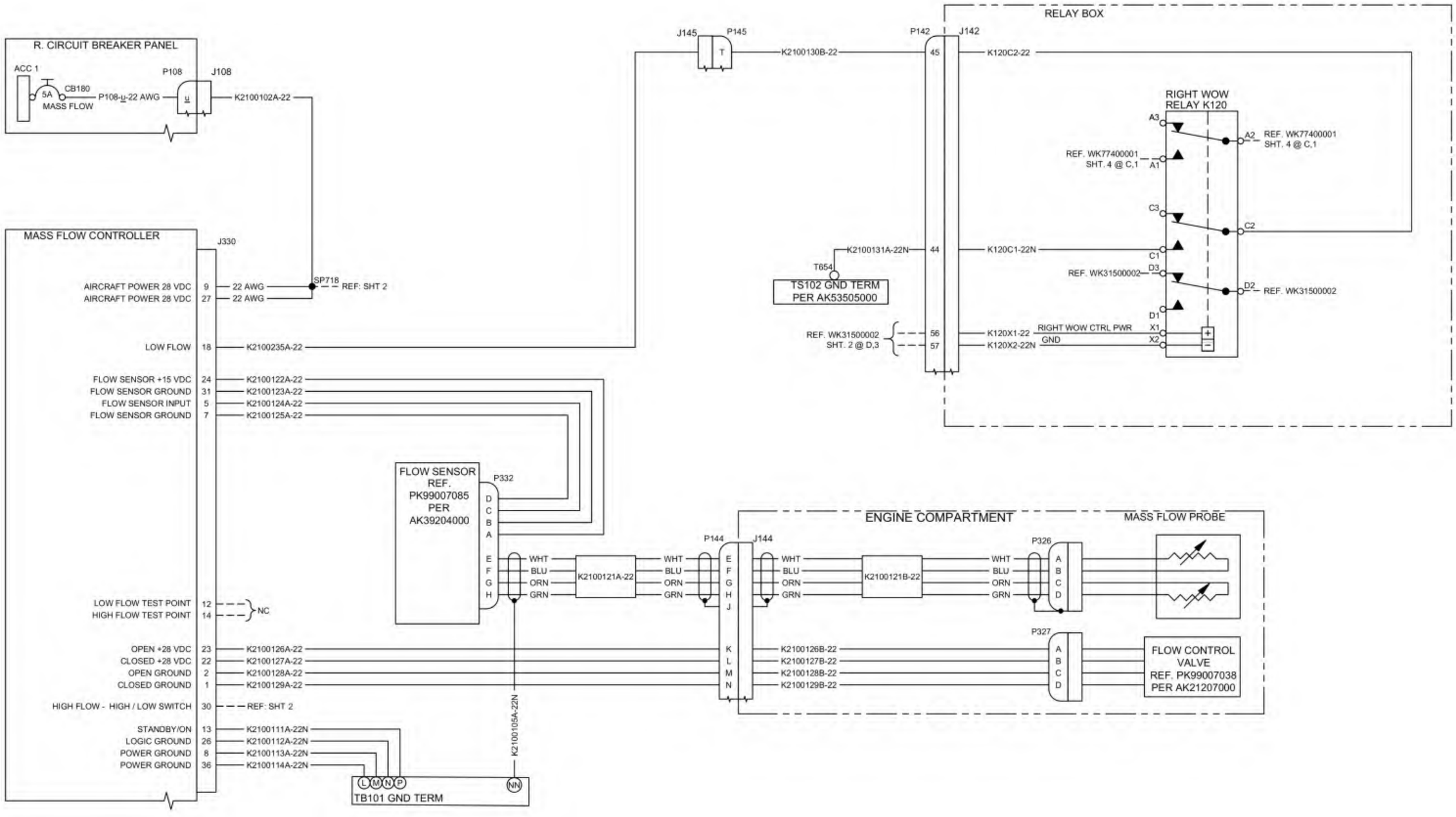

Figure 21-30.3: WK21000002 - 1 Mass Air Flow (Sheet 2 of 2)

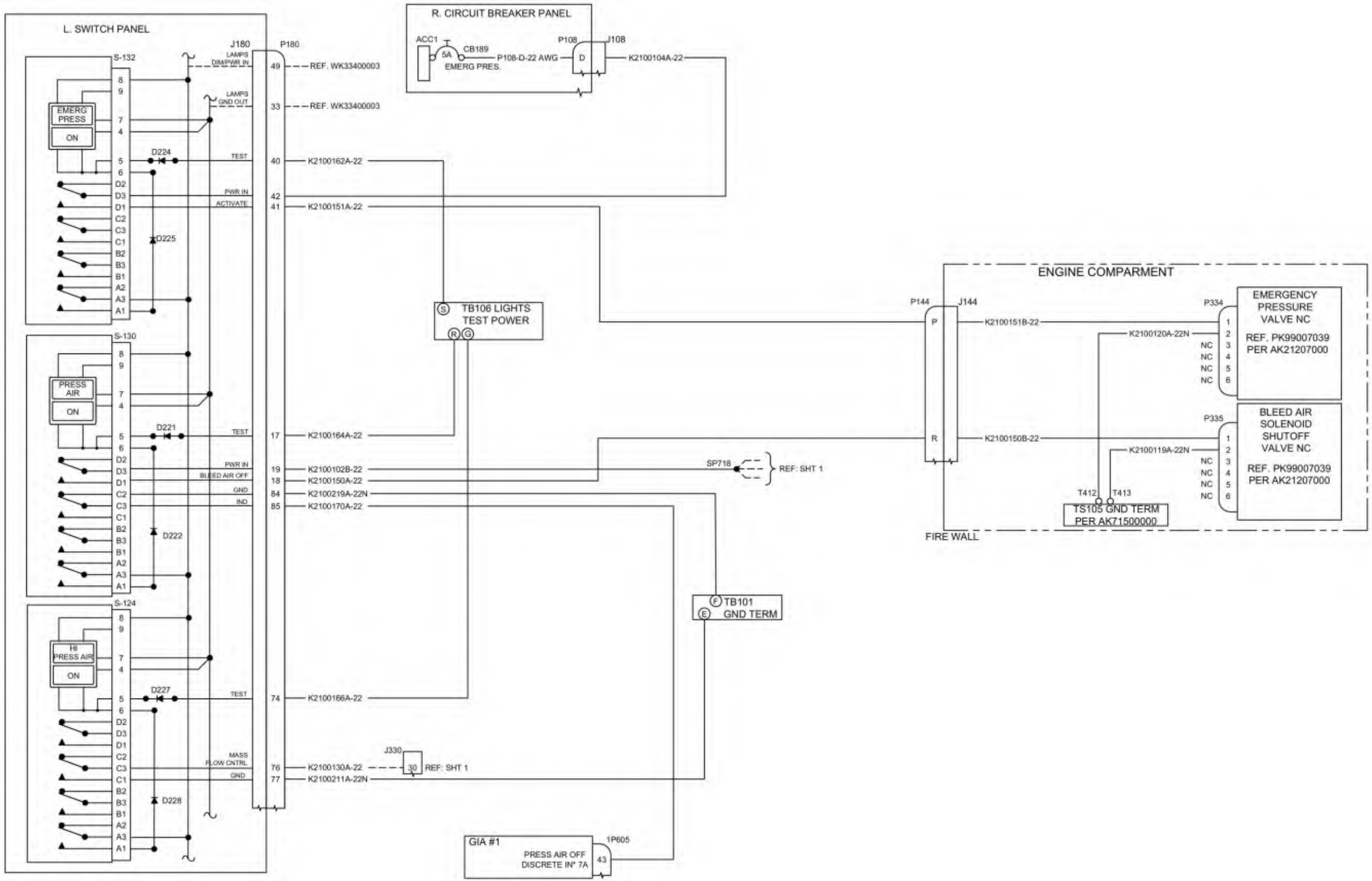

Figure 21-30.4: WK21300001- 1 Pressurization System

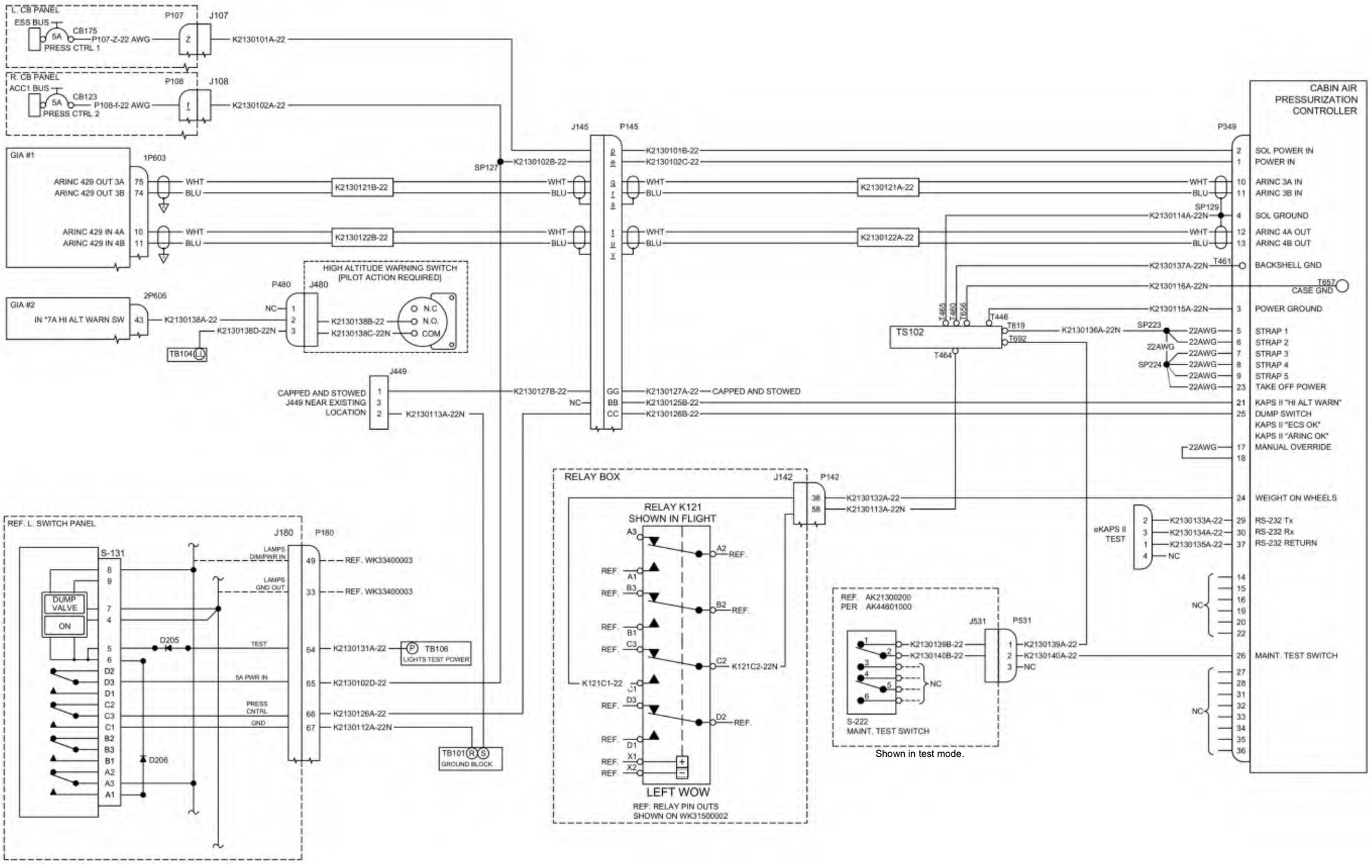

Figure 21-50.1: WK21500001- 2 Air Conditioning System (Sheet 1 of 2)

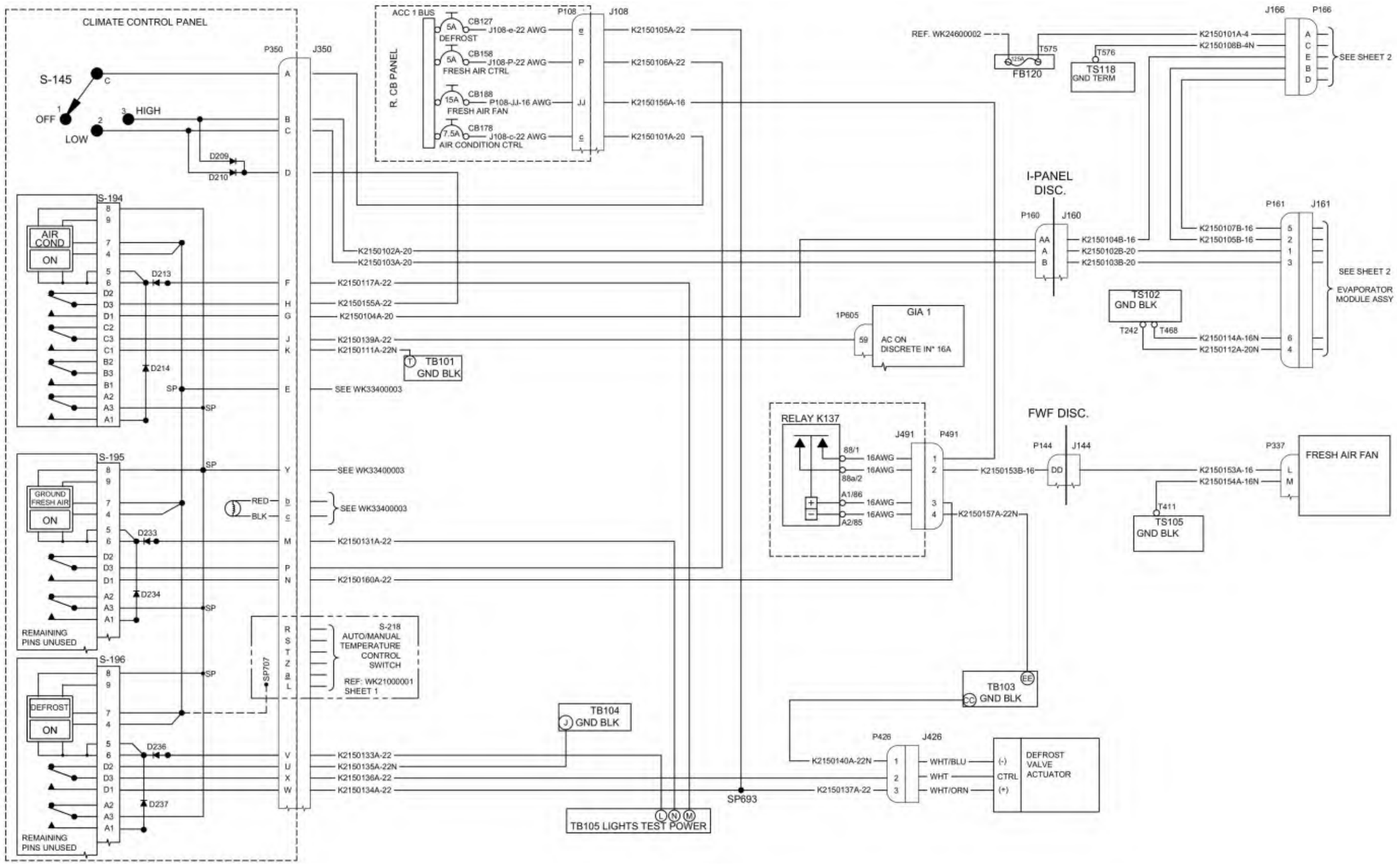

Figure 21-50.1: WK21500001- 2 Air Conditioning System (Sheet 2 of 2)

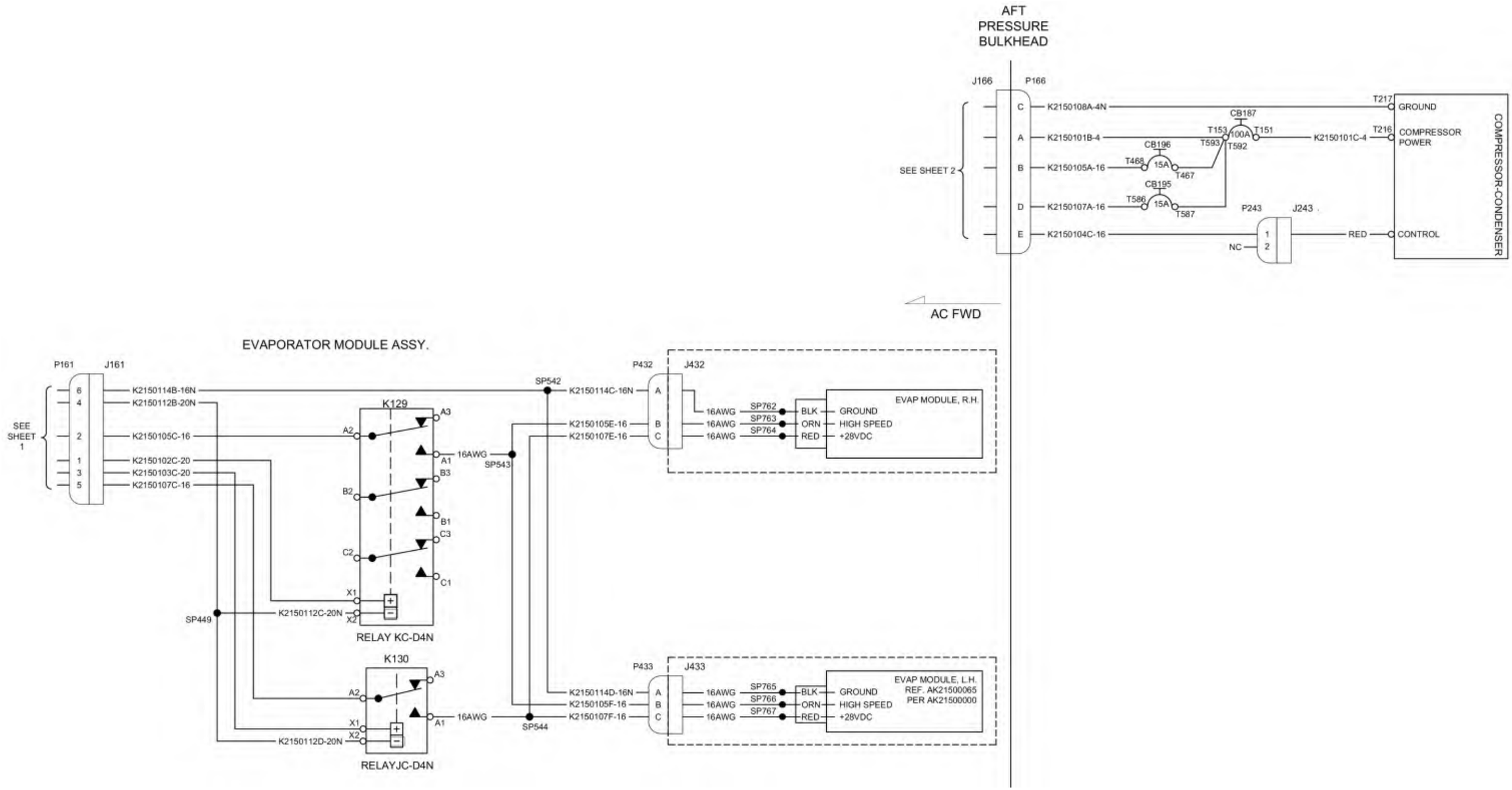

CHAPTER 22

Auto Flight

This Page Intentionally Left Blank

List of Effective Pages

Chapter/Section	Page Number	Effective Date
22-Title	Page 1	02 Jan 2020
22-Title	Page 2	02 Jan 2020
22-LOEP	Page 1	17 Aug 2022
22-LOEP	Page 2	02 Jan 2020
22-TOC	Page 1	17 Aug 2022
22-TOC	Page 2	02 Jan 2020
22-00	Page 1	14 Jul 2021
22-00	Page 2	02 Jan 2020
22-10	Page 1	14 Jul 2021
22-10	Page 2	14 Jul 2021
22-10	Page 3	14 Jul 2021
22-10	Page 4	14 Jul 2021
22-11	Page 1	17 Aug 2022
22-11	Page 2	17 Aug 2022
22-11	Page 3	17 Aug 2022
22-11	Page 4	17 Aug 2022
22-11	Page 5	17 Aug 2022
22-11	Page 6	17 Aug 2022

This Page Intentionally Left Blank

CHAPTER 22

Table of Contents

List of Effective Pages ..... 22-LOEP / Page 1
Table of Contents ..... 22-TOC / Page1

Paragraph **Page Number**

Auto Flight

1. General ..... 22-00 / Page 1

Autopilot S-TEC

Figure 22-10.1: WK221000001-- (Sheet 1 of 3) Autopilot S-Tec (SN: K003-K010)... 22-10 / Page 1

Autopilot GARMIN GFC 700

Figure 22-11.1: WK221002001-- (Sheet 1 of 3) - - Autopilot Garmin GFC 700 (SN: K011-K029, and K003-K010 with SB-0017) ..... 22-11 / Page 1
Figure 22-11.2: WK221002001A- (Sheet 1 of 3) - - Autopilot Garmin GFC 700 (SN: K003-K010 with SB-0017, K011-K029 with SB-0034, and K030 and On) ..... 22-11 / Page 4

This Page Intentionally Left Blank

AUTO FLIGHT

1. General

The E1000 has the S-TEC MAGIC® 2100 Digital Flight Control System (DFCS). This system is a three-Axis attitude based autopilot that lets the pilot manually or automatically control the roll, pitch, and yaw of the aircraft through selected modes of operation.

Refer to the latest revision of the S-TEC MAGIC® 2100 Pilot's Operating Handbook for additional information.

The E1000 GX has the Garmin GFC 700 AHRS-based automatic flight control system (AFCS). This system is a three-Axis attitude based autopilot that lets the pilot manually or automatically control the roll, pitch, and yaw of the airplane through selected modes of operation.

Refer to the latest revision of the Garmin GFC 700 Pilot's Operating handbook for additional information.

This Page Intentionally Left Blank

Figure 22-10.1: WK221000001-- (Sheet 1 of 3) Autopilot S-Tec (SN: K003-K010)

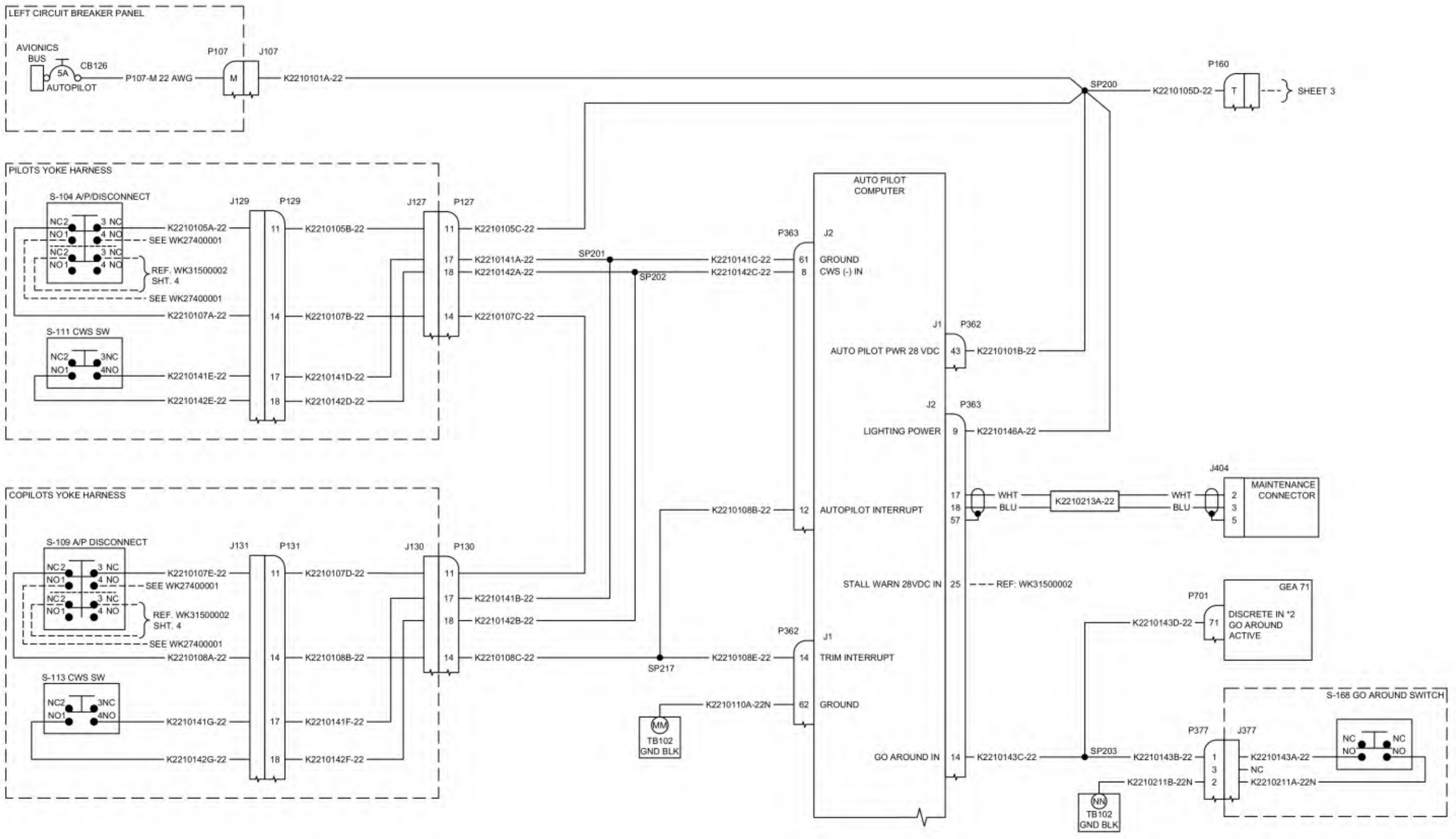

Figure 22-10.1: WK221000001-- (Sheet 2 of 3) Autopilot S-Tec (SN: K003-K010)

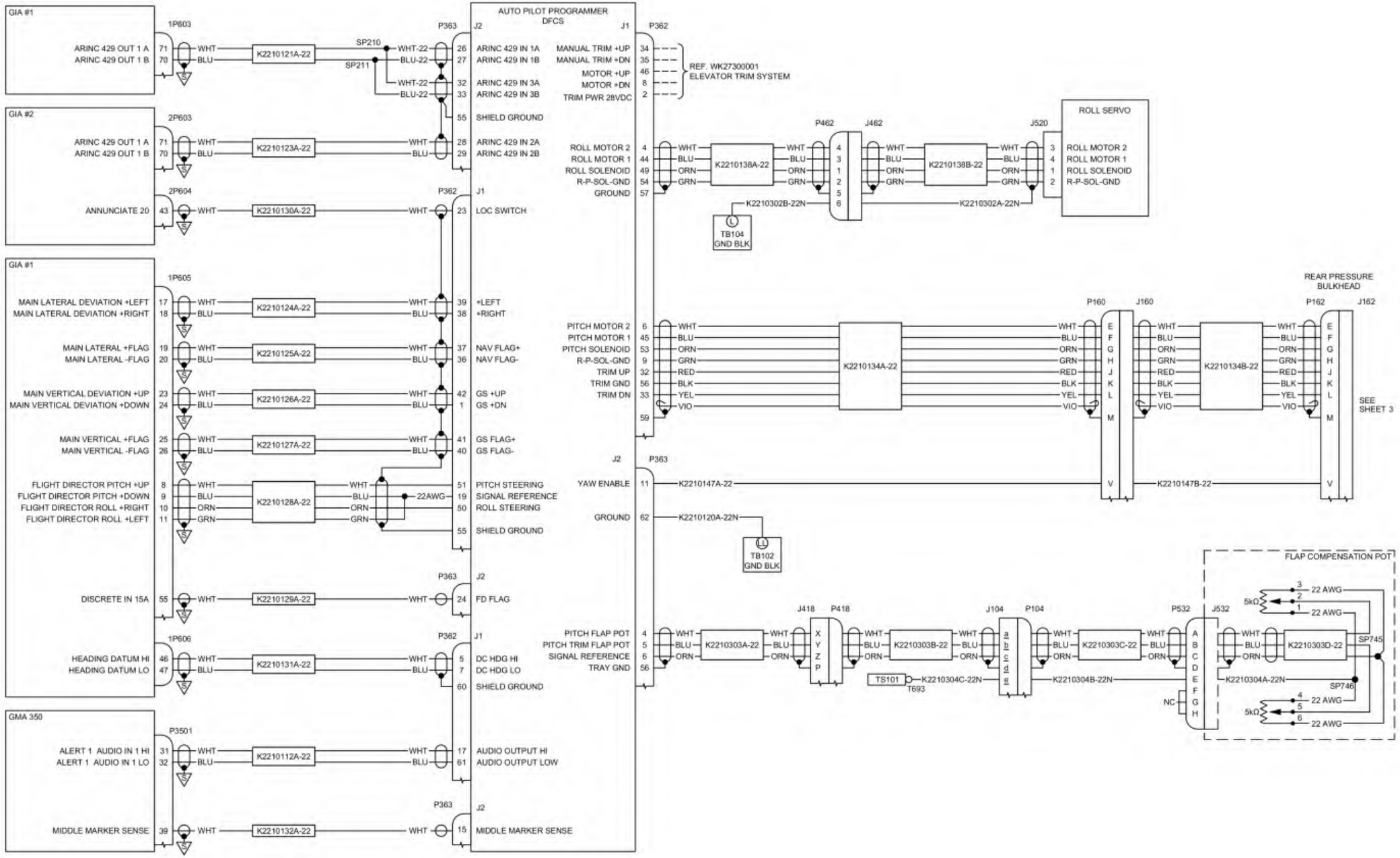

Figure 22-10.1: WK221000001-- (Sheet 3 of 3) Autopilot S-Tec (SN: K003-K010)

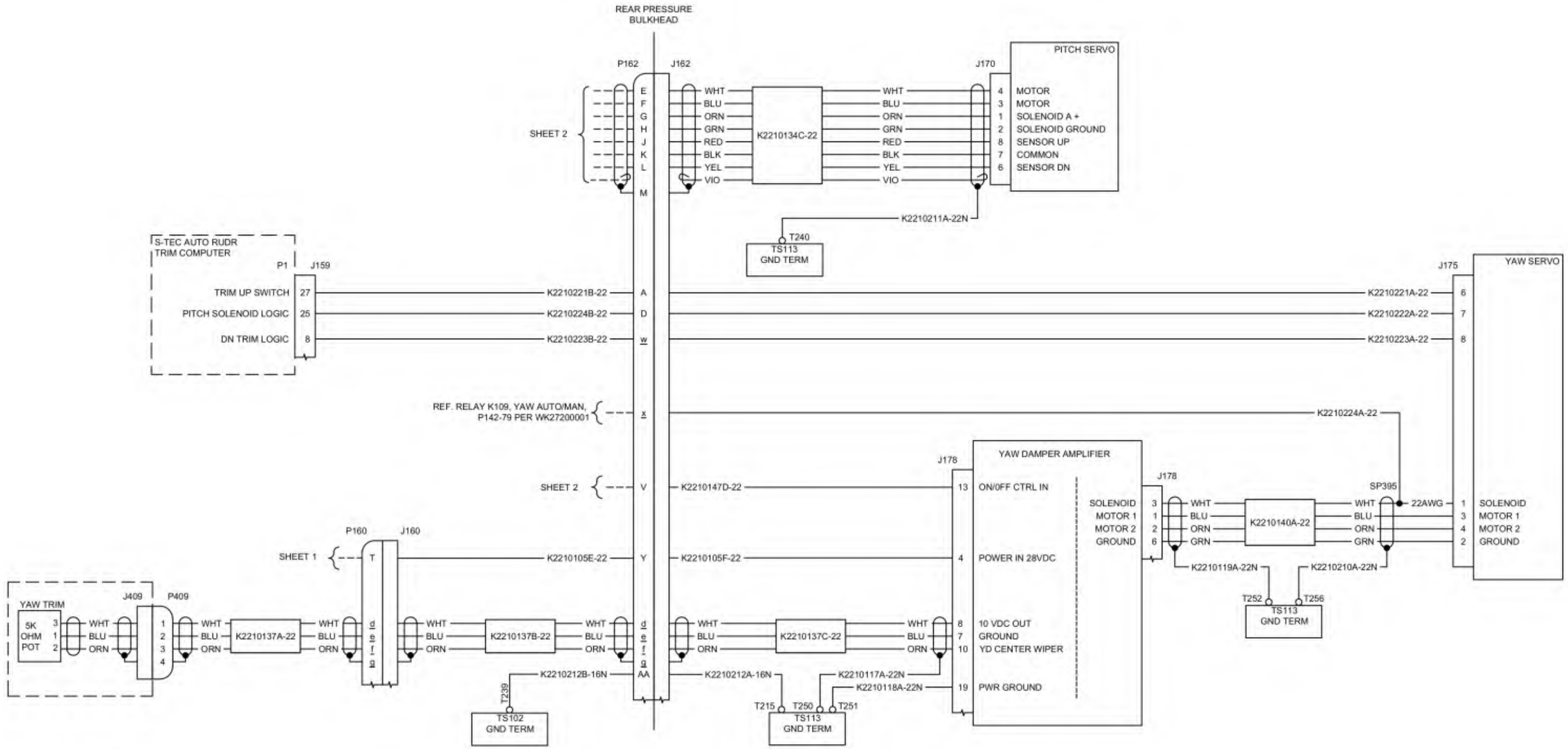

This Page Intentionally Left Blank

Figure 22-11.1: WK221002001-- (Sheet 1 of 3) - - Autopilot Garmin GFC 700 (SN: K011-K029, and K003-K010 with SB-0017)

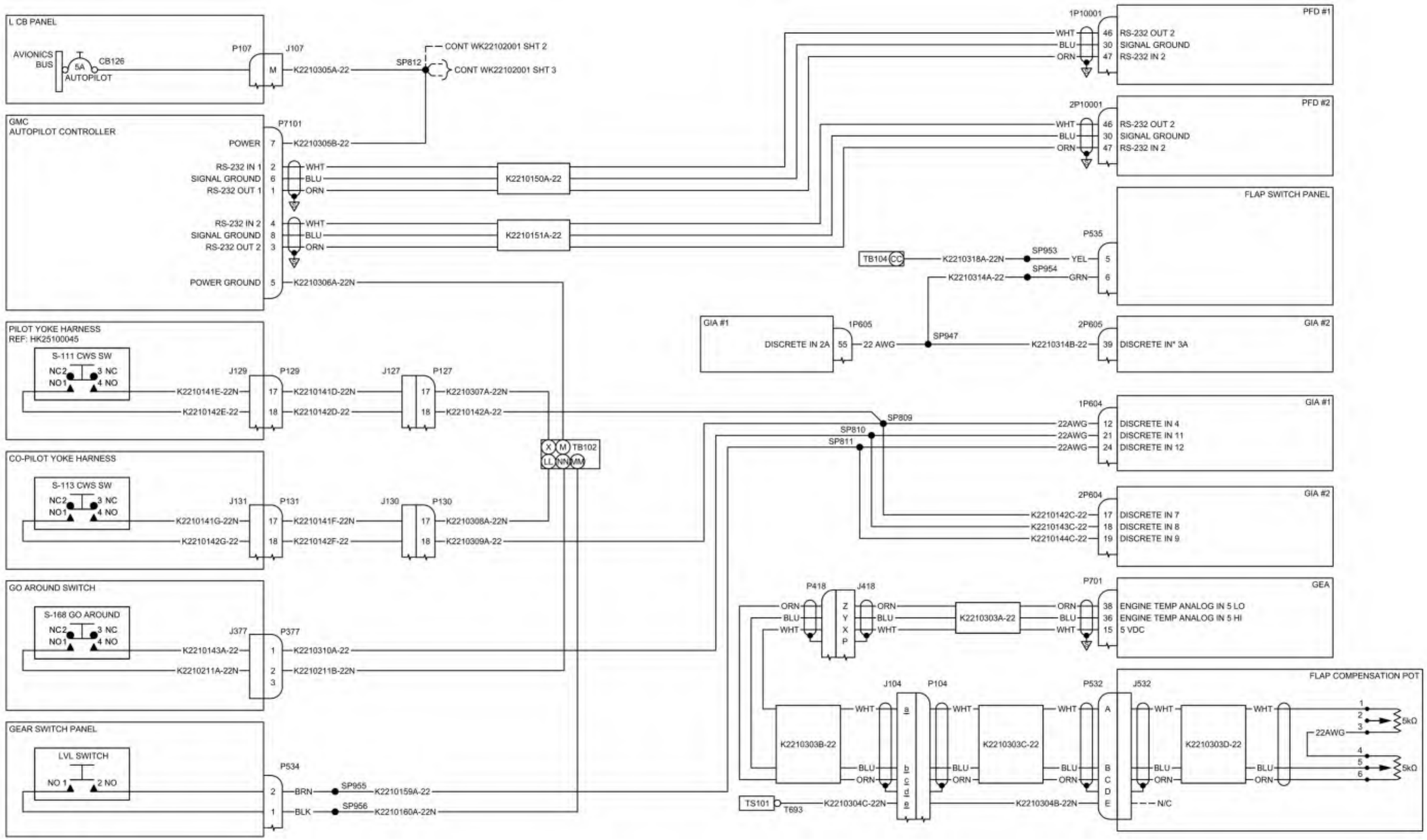

Figure 22-11.1: WK221002001-- (Sheet 2 of 3) - - Autopilot Garmin GFC 700 (SN: K011 - K029, and K003-K010 with SB-0017)

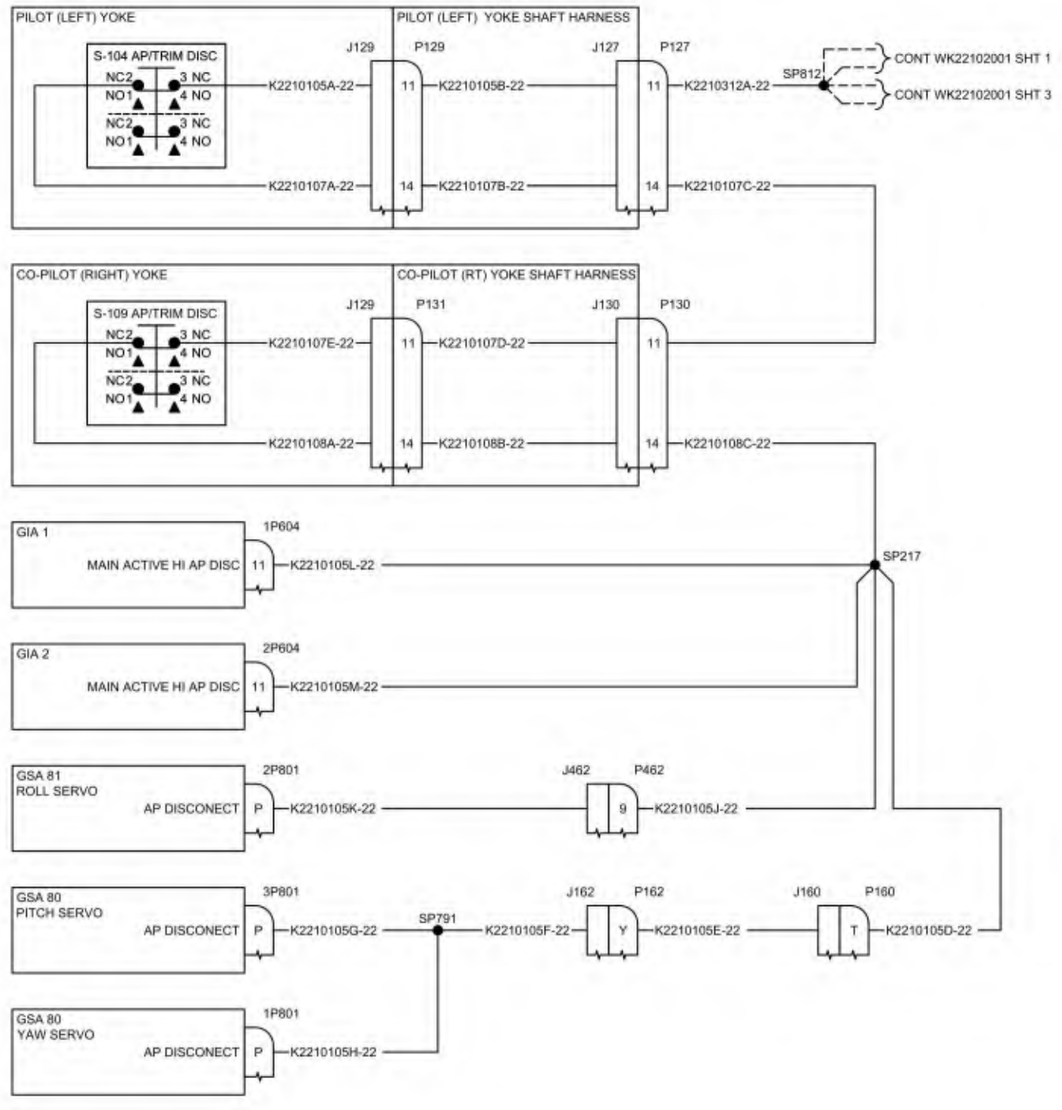

Figure 22-11.1: WK221002001-- (Sheet 3 of 3) - - Autopilot Garmin GFC 700 (SN: K011-K029, and K003-K010 with SB-0017)

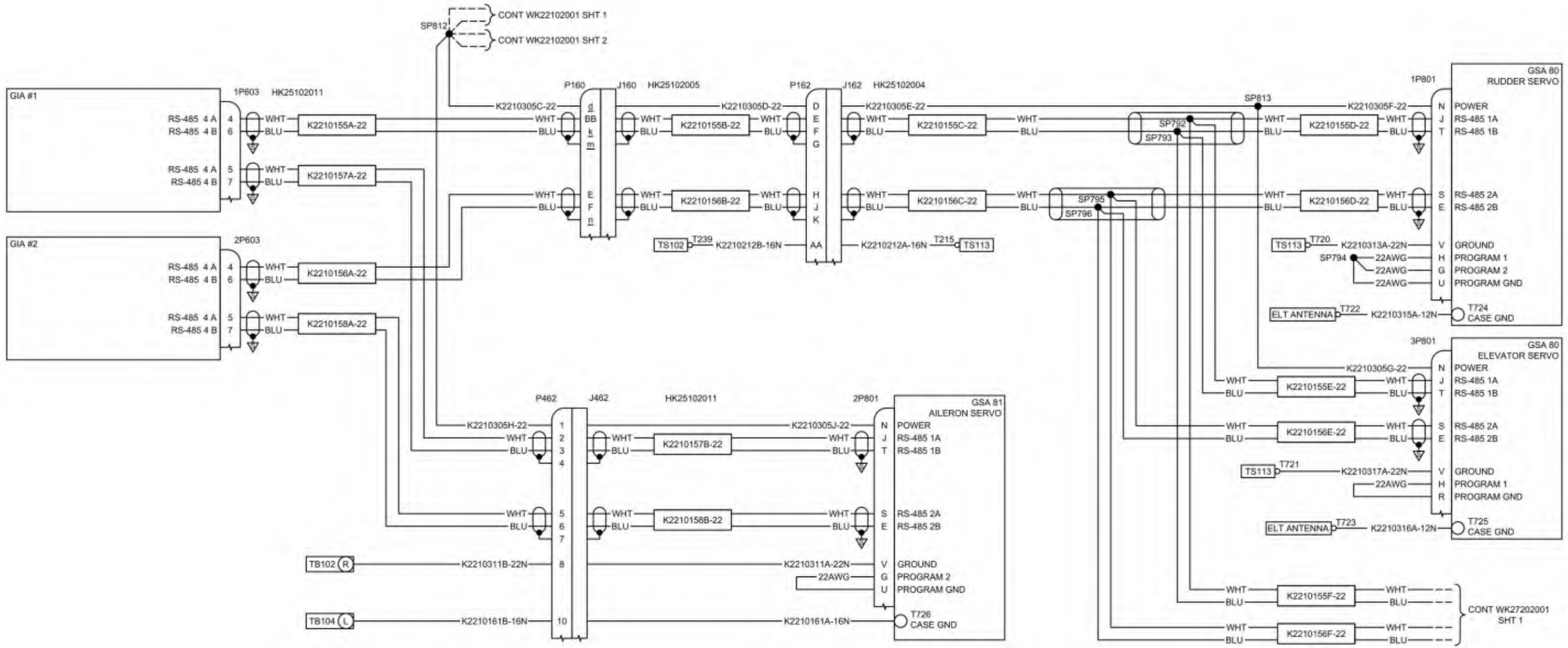

Figure 22-11.2: WK221002001A- (Sheet 1 of 3) - - Autopilot Garmin GFC 700 (SN: K003-K010 with SB-0017, K011-K029 with SB-0034, and K030 and On)

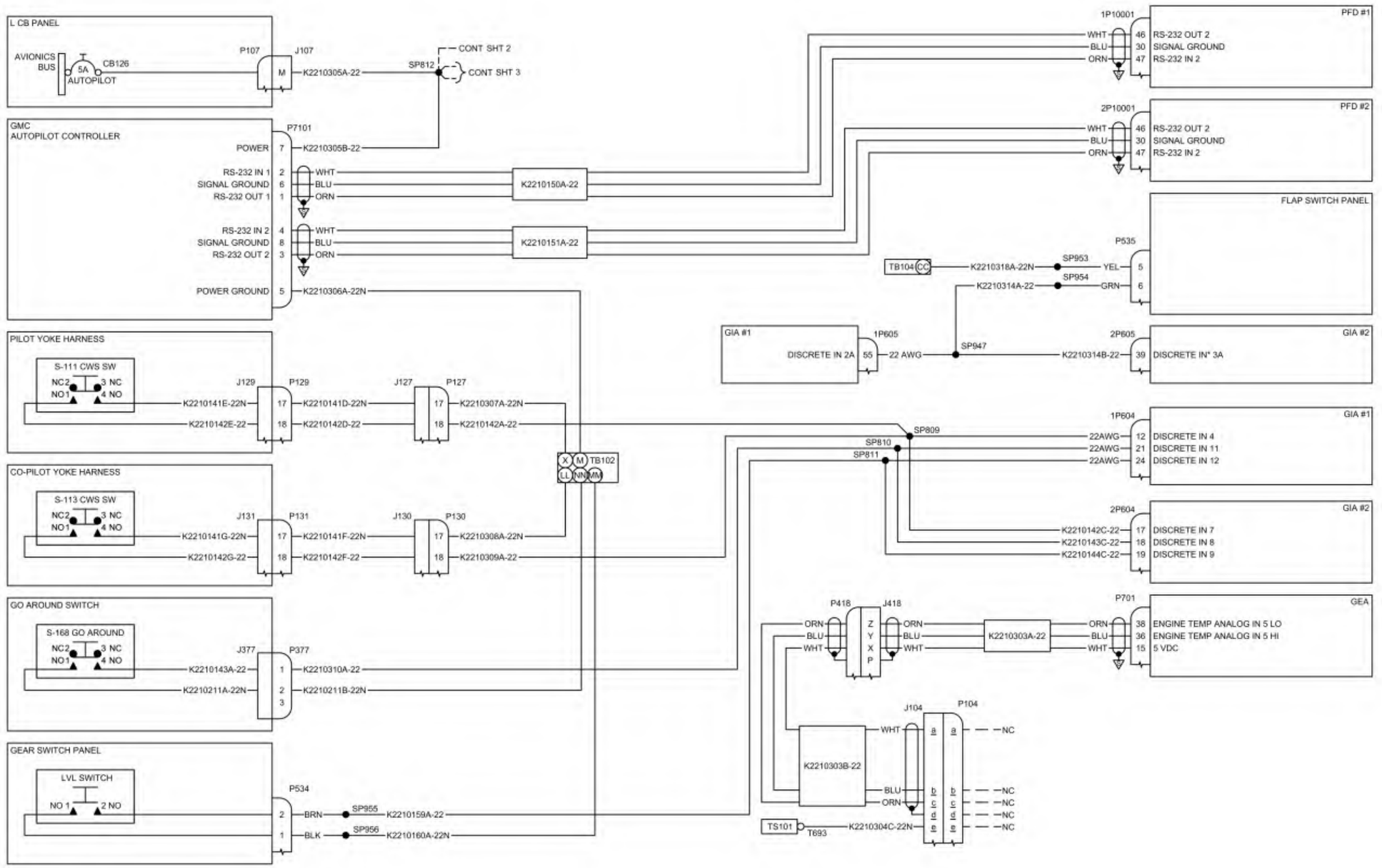

Figure 22-11.2: WK221002001A-(Sheet 2 of 3) - - Autopilot Garmin GFC 700 (SN: K003-K010 with SB-0017, K011-K029 with SB-0034, and K030 and On)

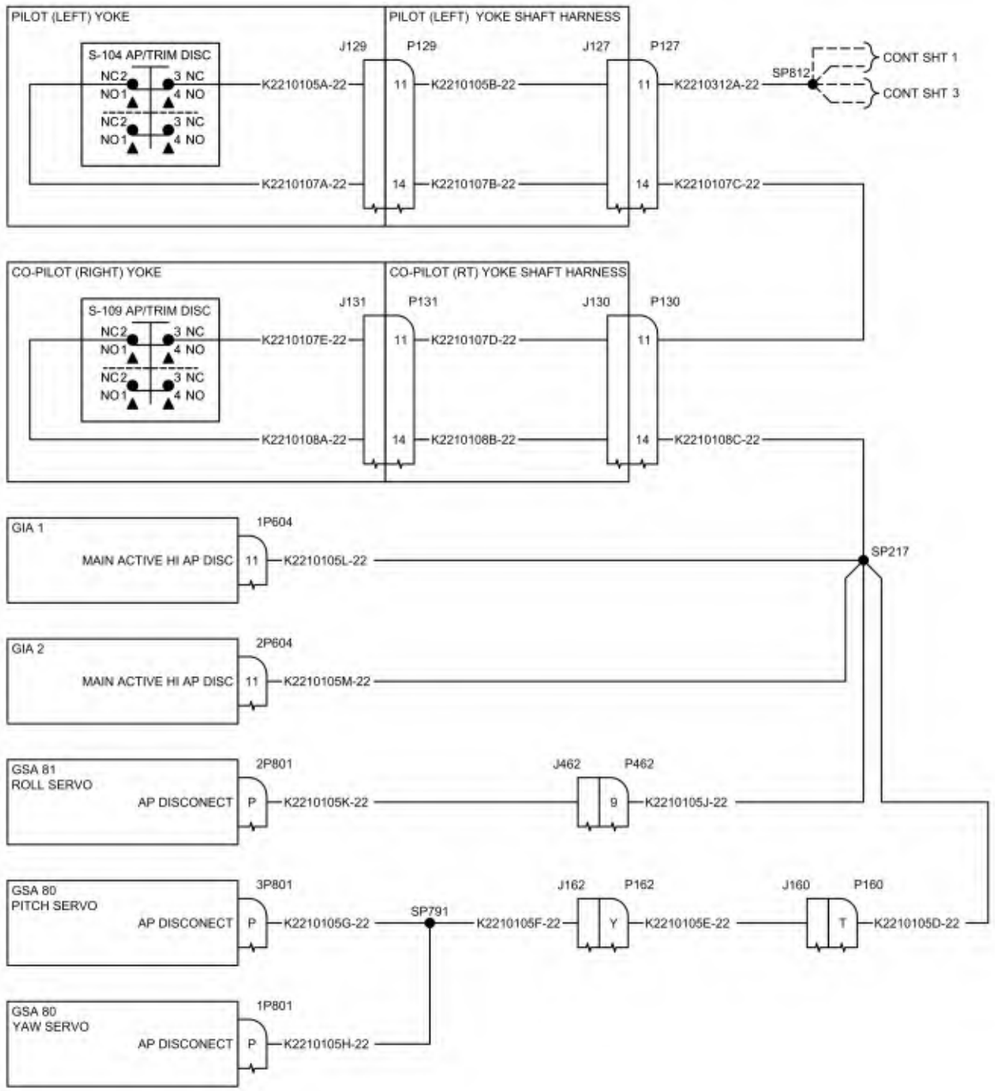

Figure 22-11.2: WK221002001A-(Sheet 3 of 3) - - Autopilot Garmin GFC 700 (SN: K003-K010 with SB-0017, K011-K029 with SB-0034, and K030 and On)

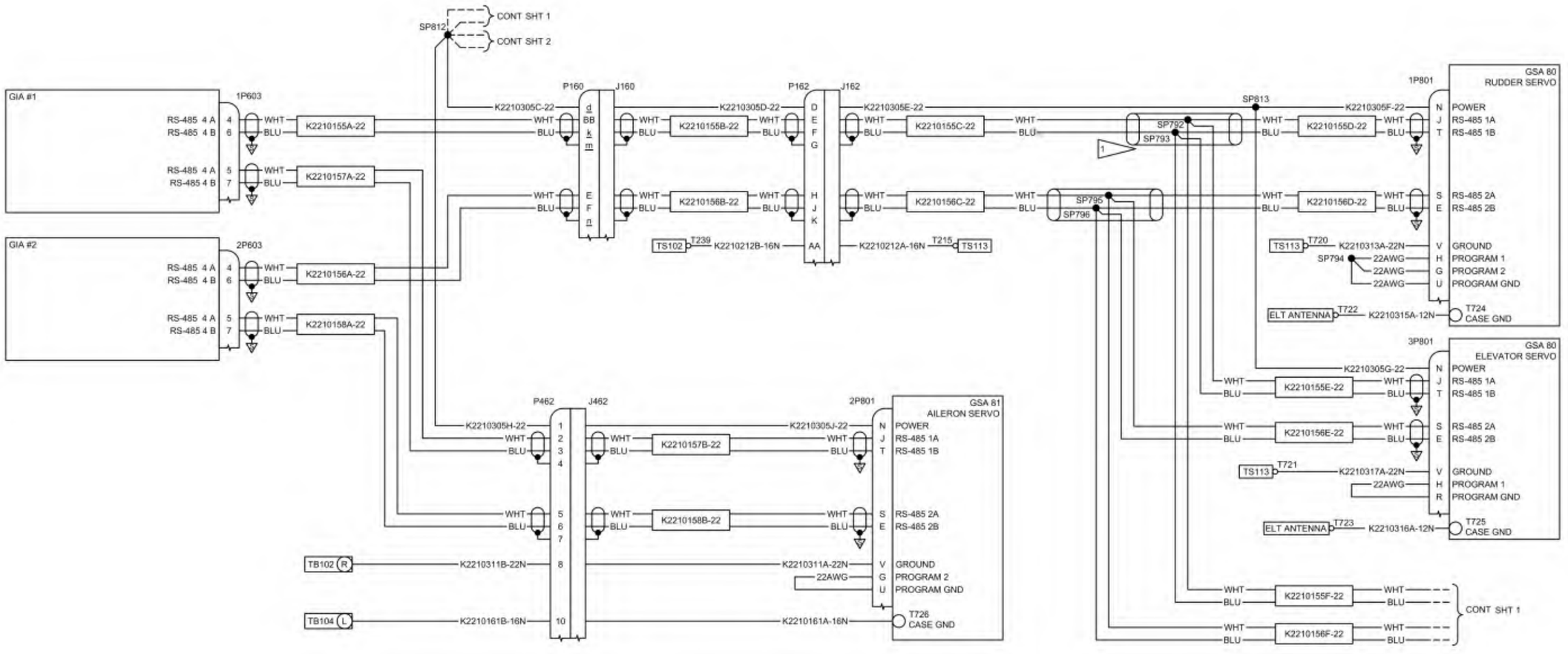

CHAPTER 23

Communications

This Page Intentionally Left Blank

List of Effective Pages

Chapter/Section	Page Number	Effective Date
23-Title	Page 1	02 Jan 2020
23-Title	Page 2	02 Jan 2020
23-LOEP	Page 1	14 July 2025
23-LOEP	Page 2	02 Jan 2020
23-TOC	Page 1	17 Aug 2022
23-TOC	Page 2	02 Jan 2020
23-00	Page 1	02 Jan 2020
23-00	Page 2	02 Jan 2020
23-10	Page 1	14 July 2025
23-10	Page 2	02 Jan 2020
23-10	Page 3	02 Jan 2020
23-10	Page 4	02 Jan 2020
23-10	Page 5	17 Aug 2022
23-10	Page 6	17 Aug 2022
23-10	Page 7	17 Aug 2022
23-10	Page 8	17 Aug 2022
23-30	Page 1	14 Jul 2021
23-30	Page 2	14 Jul 2021
23-30	Page 3	17 Aug 2022
23-30	Page 3	17 Aug 2022
23-30	Page 4	14 July 2025

This Page Intentionally Left Blank

CHAPTER 23

Table of Contents

List of Effective Pages ..... 23-LOEP / Page 1
Table of Contents ..... 23-TOC / Page1

Paragraph **Page Number**

Communications

1. General ..... 23-00 / Page 1

Speech Communication

Figure 23-10.1: WK23100001A- Audio and Communications System (Sheet 1 of 4) .. 23-10 / Page 1
Figure 23-10.2: WK23100001A- Audio and Communications System (Sheet 1 of 4) .. 23-10 / Page 5

Passenger Entertainment

Figure 23-30.1: WK233000001-- Passenger Entertainment (SN: K003-K010) ..... 23-30 / Page 1
Figure 23-30.2: WK233002001-- Passenger Entertainment (SN: K011 and On, and K003-K010 with SB-0017) ..... 23-30 / Page 2
Figure 23-30.3: WK23303001-- Passenger Entertainment - GSR 56 (Optional Equipment) .... 23-30 / Page 3
Figure 23-30.4: WK23306002-- Starlink Wiring (Optional) ..... 23-30 / Page 4

This Page Intentionally Left Blank

COMMUNICATIONS

1. General

This chapter gives descriptions and maintenance procedures for communication systems used between crew and passengers, between the crew and other aircraft, and between the crew and ground stations. This chapter also includes description and maintenance of the systems that provide lightning protection and discharge of static electricity accumulation.

This Page Intentionally Left Blank

Figure 23-10.1: WK23100001A- Audio and Communications System (Sheet 1 of 4)

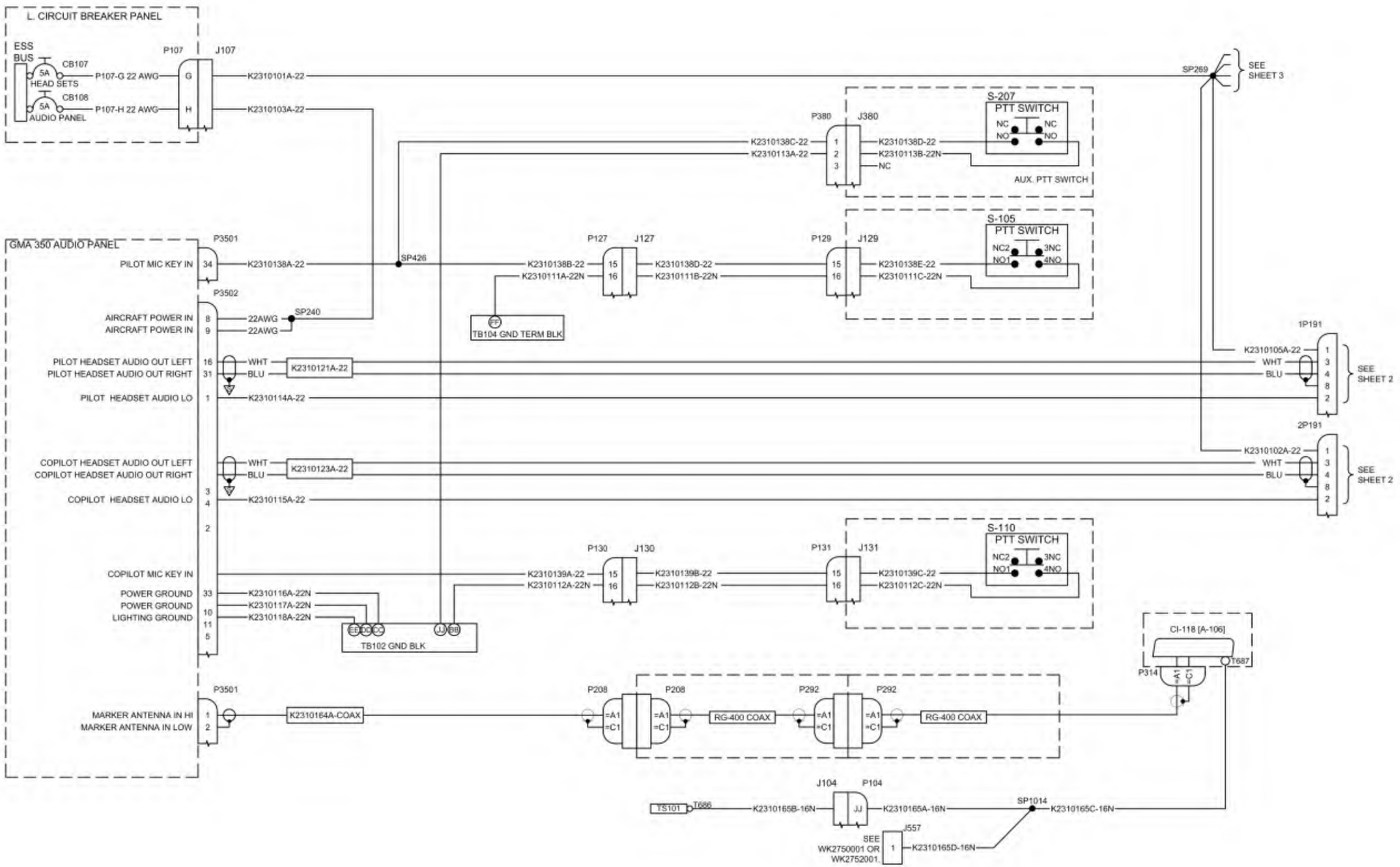

Figure 23-10.1: WK23100001A- Audio and Communications System (Sheet 2 of 4)

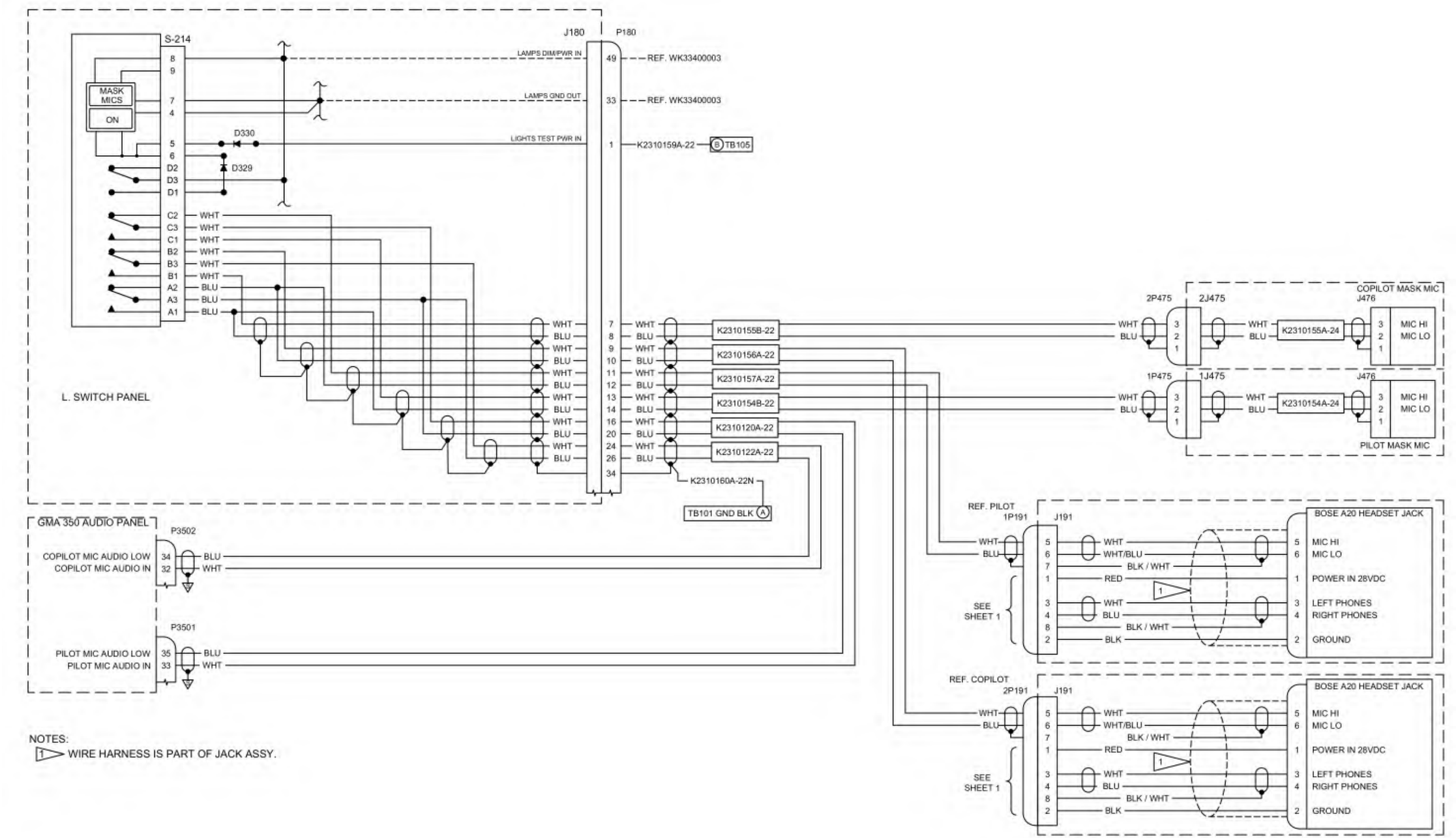

NOTES:
1. WIRE HARNESS IS PART OF JACK ASSY.

Figure 23-10.1: WK23100001A- Audio and Communications System (Sheet 3 of 4)

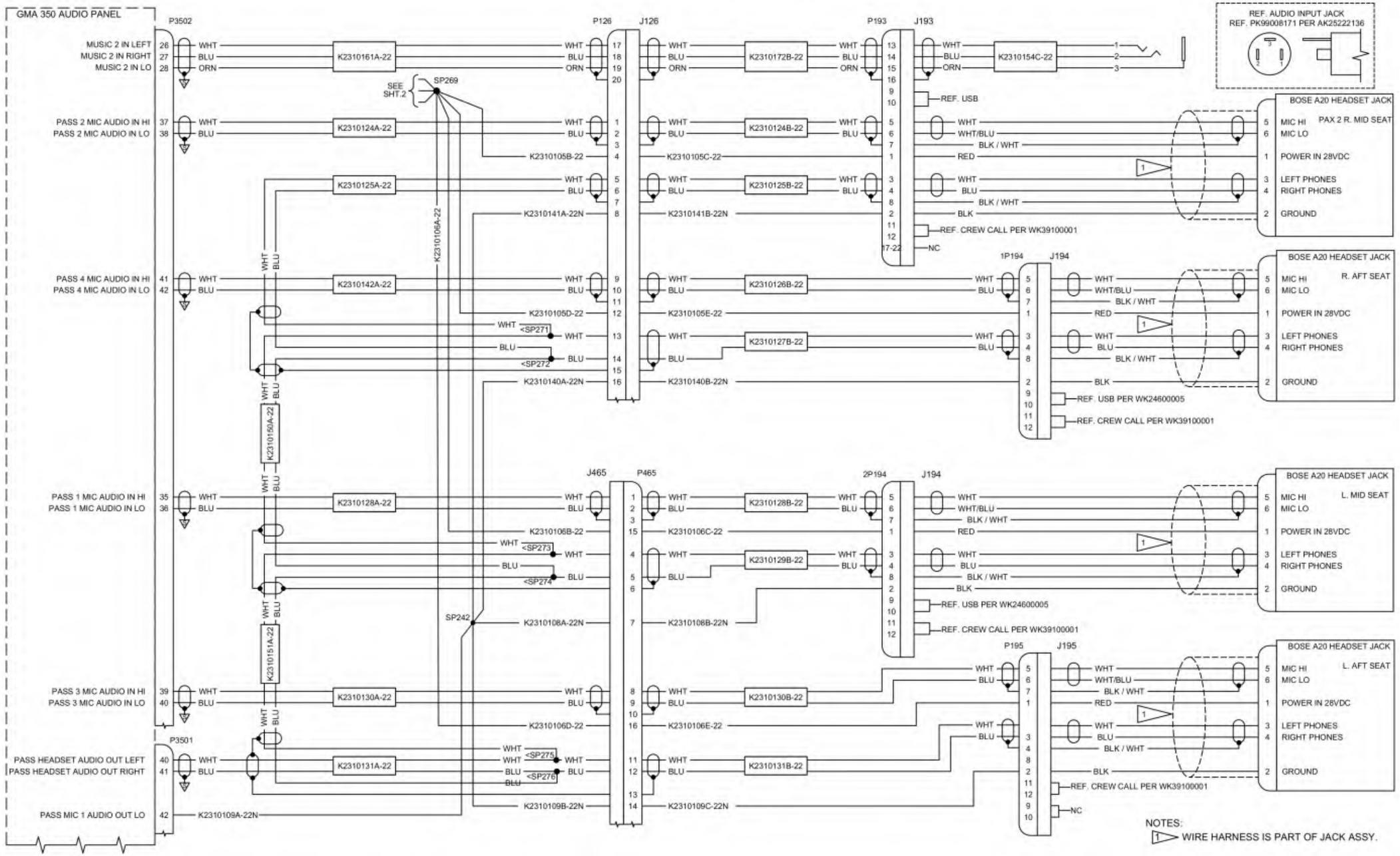

Figure 23-10.1: WK23100001A- Audio and Communications System (Sheet 4 of 4)

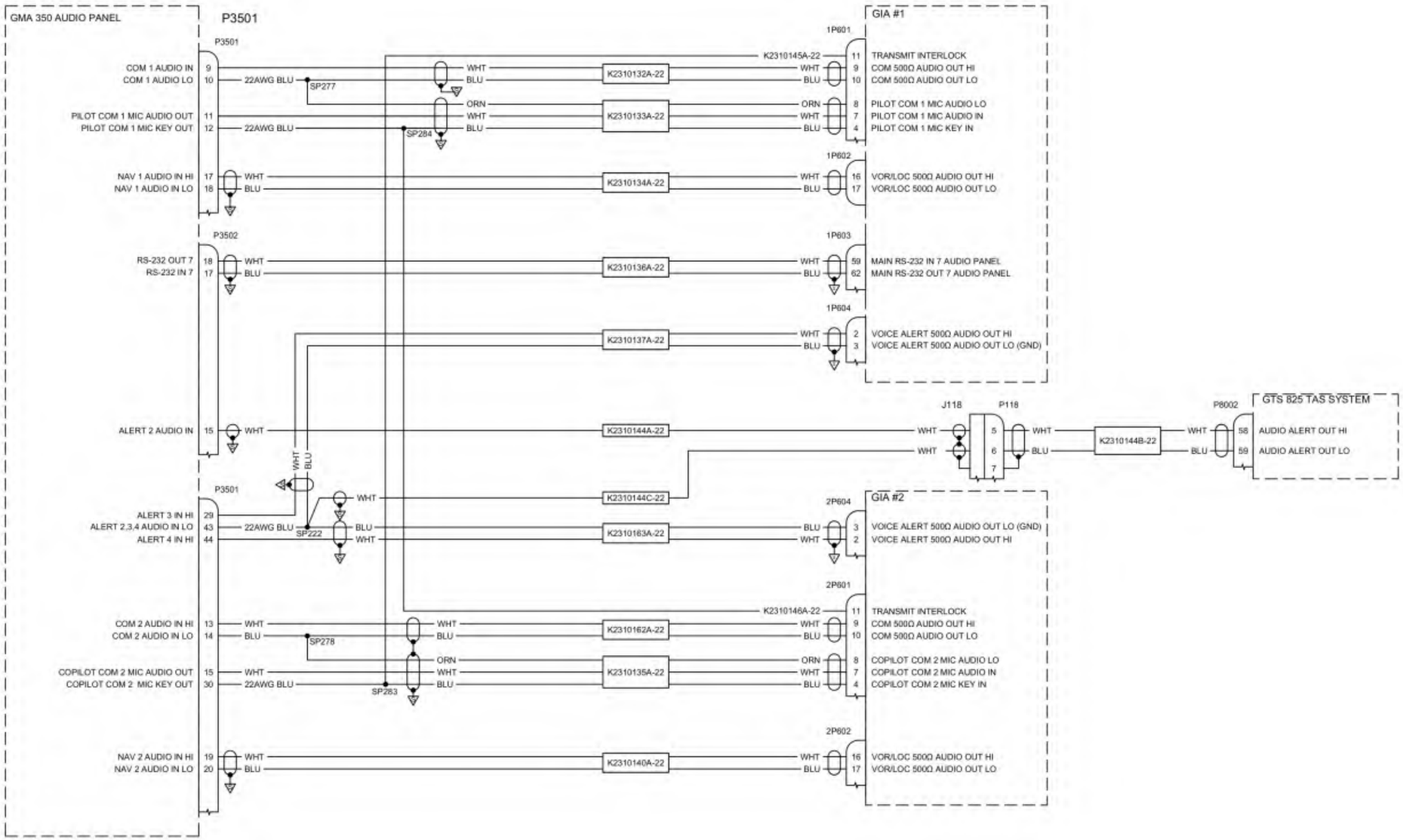

Figure 23-10.2: WK23100001A- Audio and Communications System (Sheet 1 of 4)

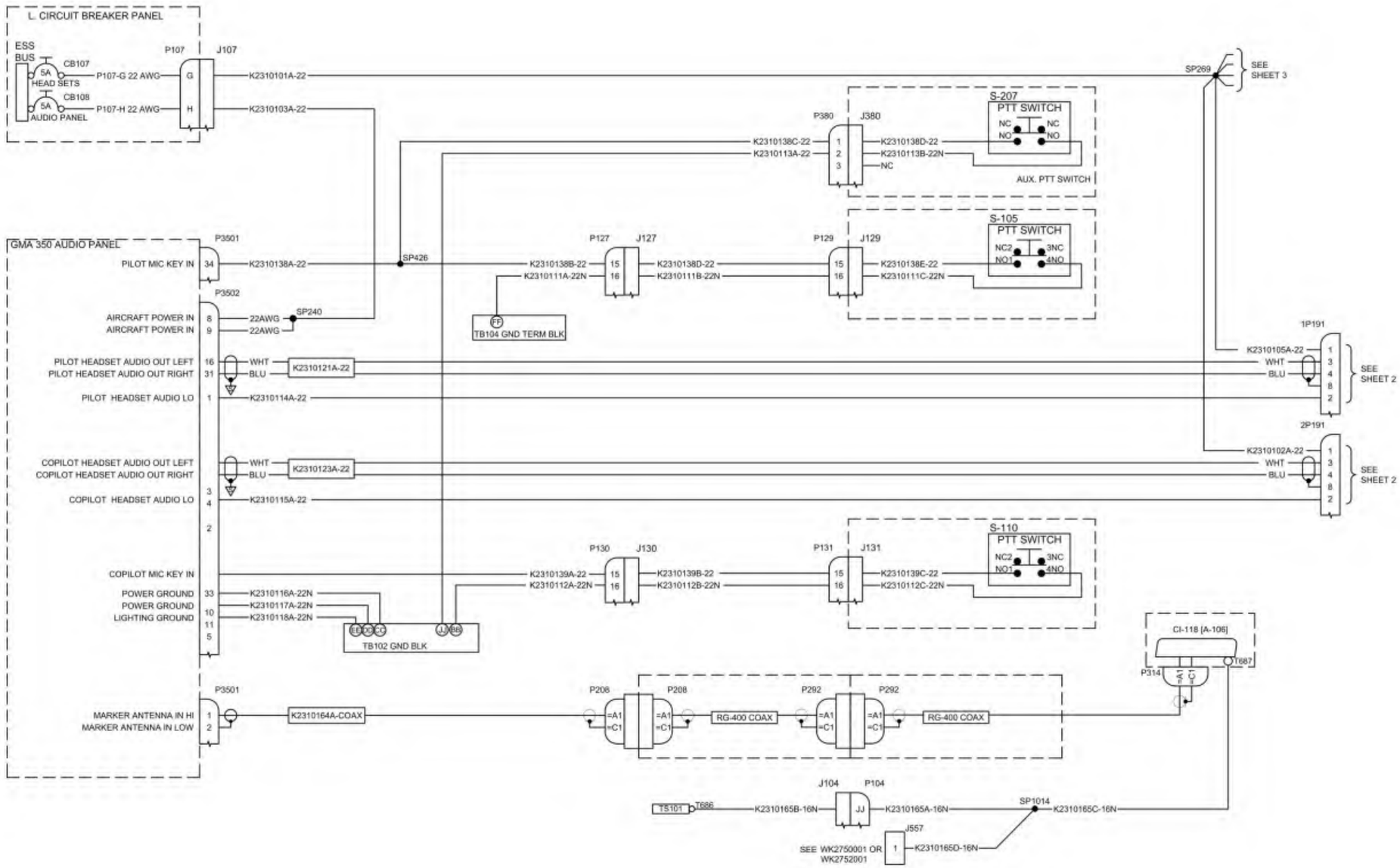

Figure 23-10.2: WK23100001A- Audio and Communications System (Sheet 2 of 4)

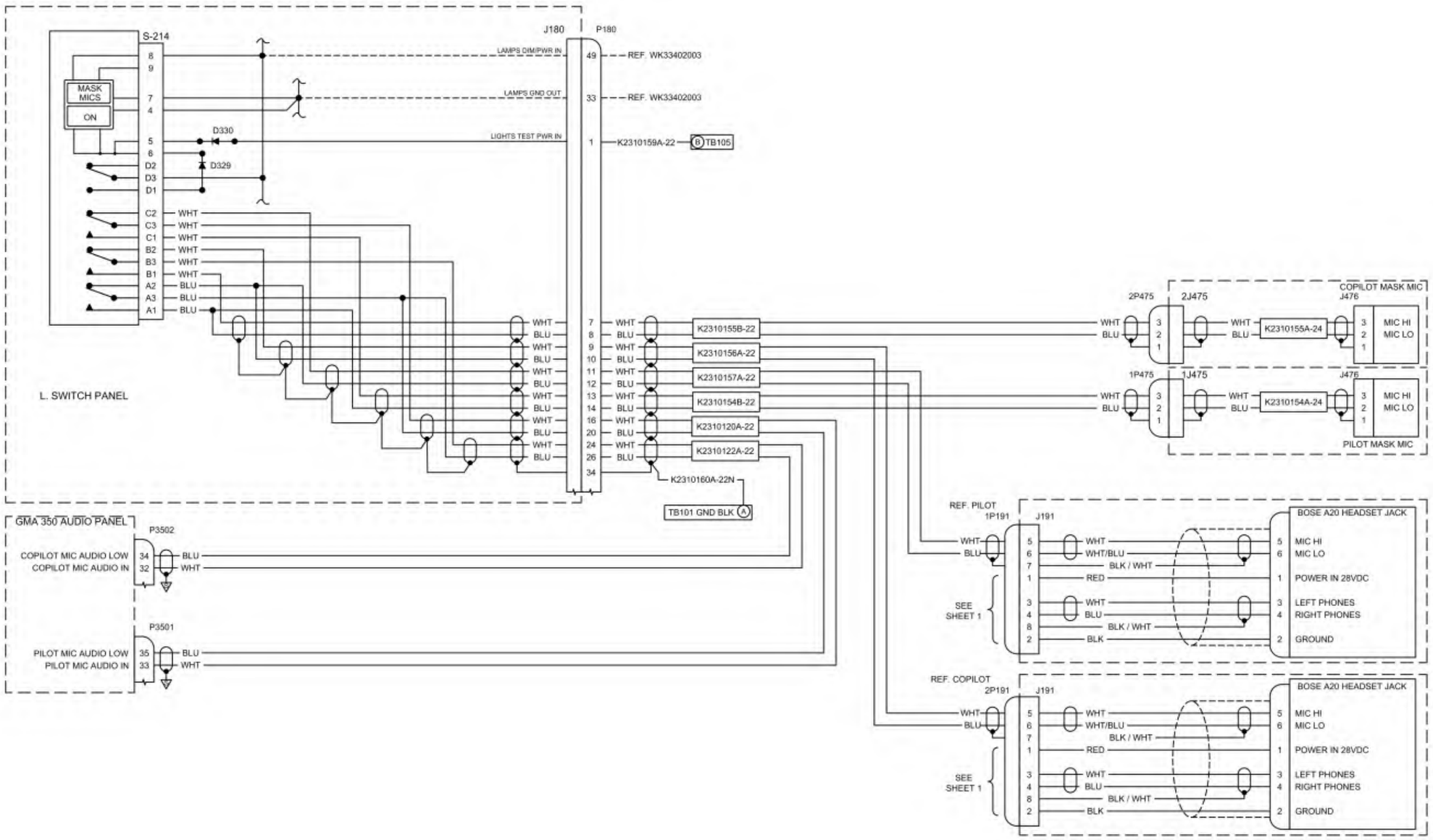

Figure 23-10.2: WK23100001A- Audio and Communications System (Sheet 3 of 4)

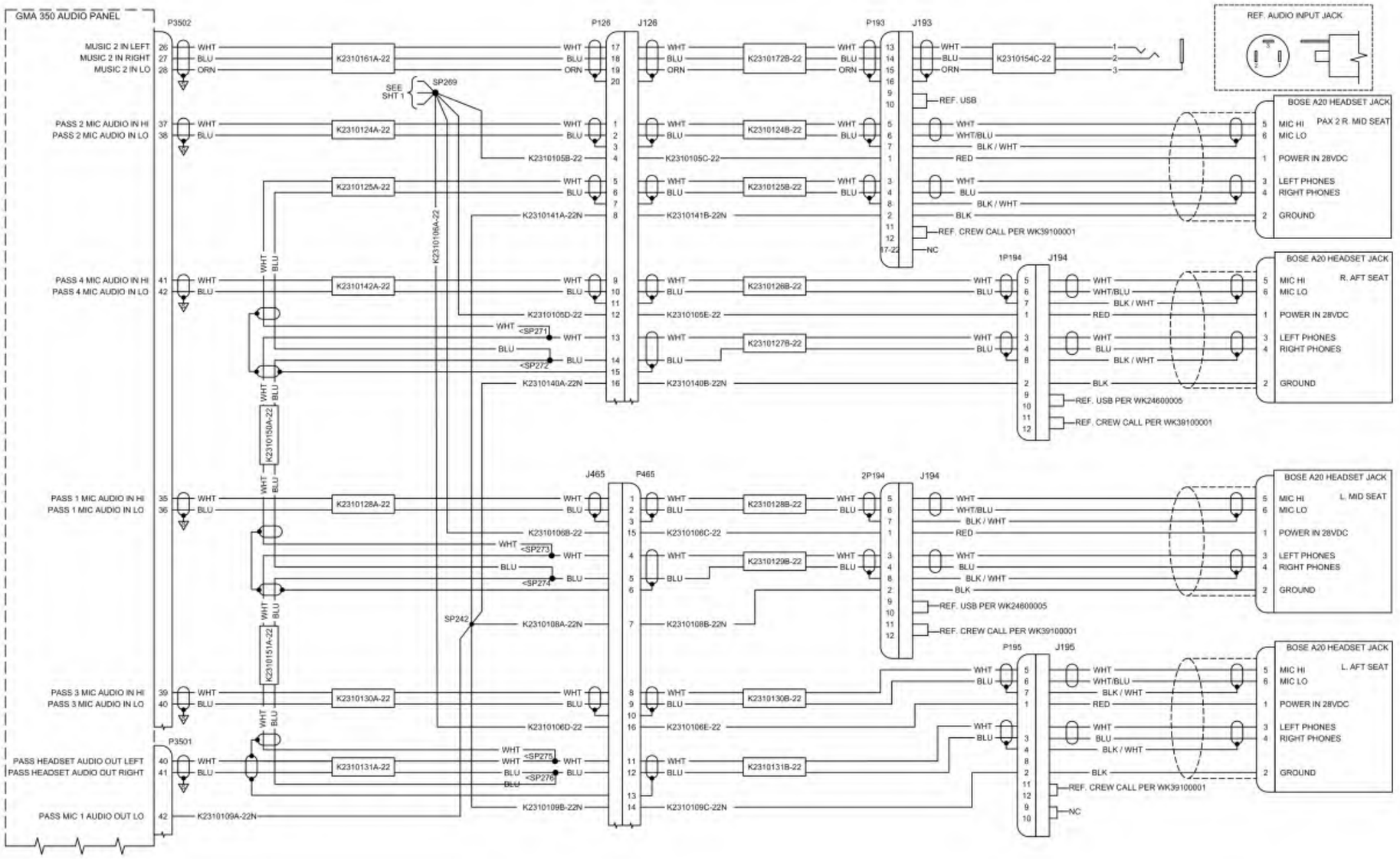

Figure 23-10.2: WK23100001A- Audio and Communications System (Sheet 4 of 4)

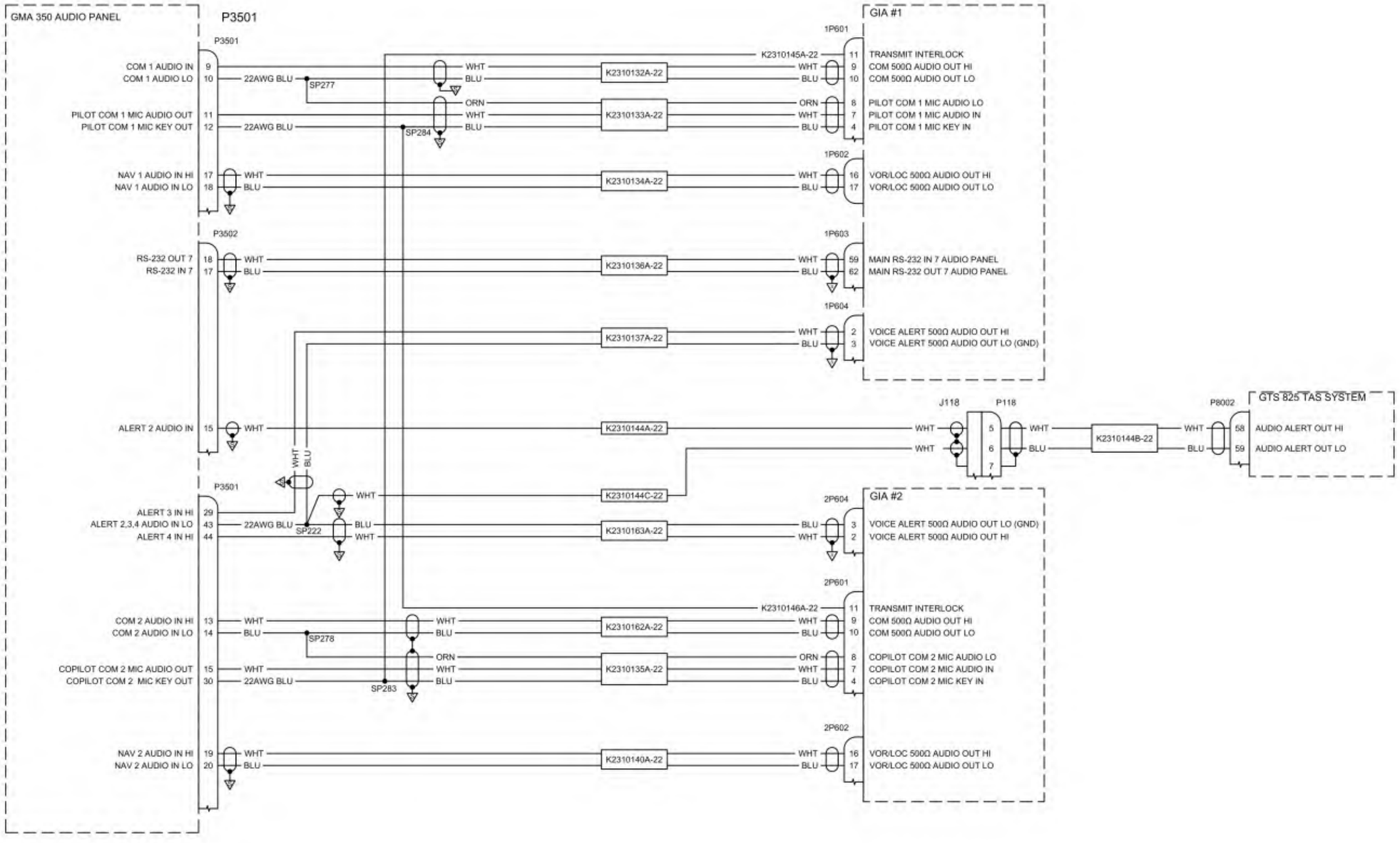

Figure 23-30.1: WK233000001-- Passenger Entertainment (SN: K003-K010)

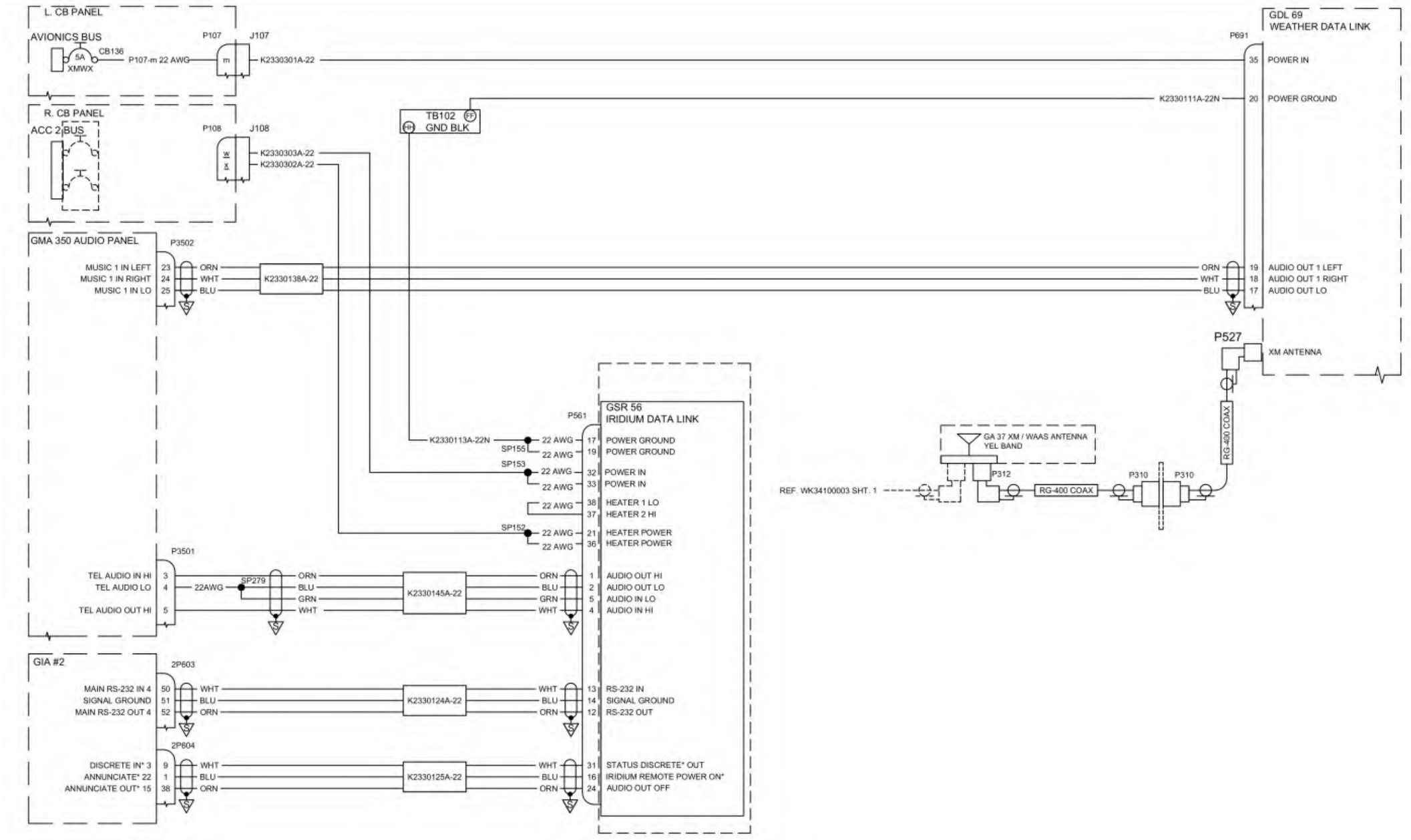

Figure 23-30.2: WK233002001-- Passenger Entertainment (SN: K011 and On, and K003-K010 with SB-0017)

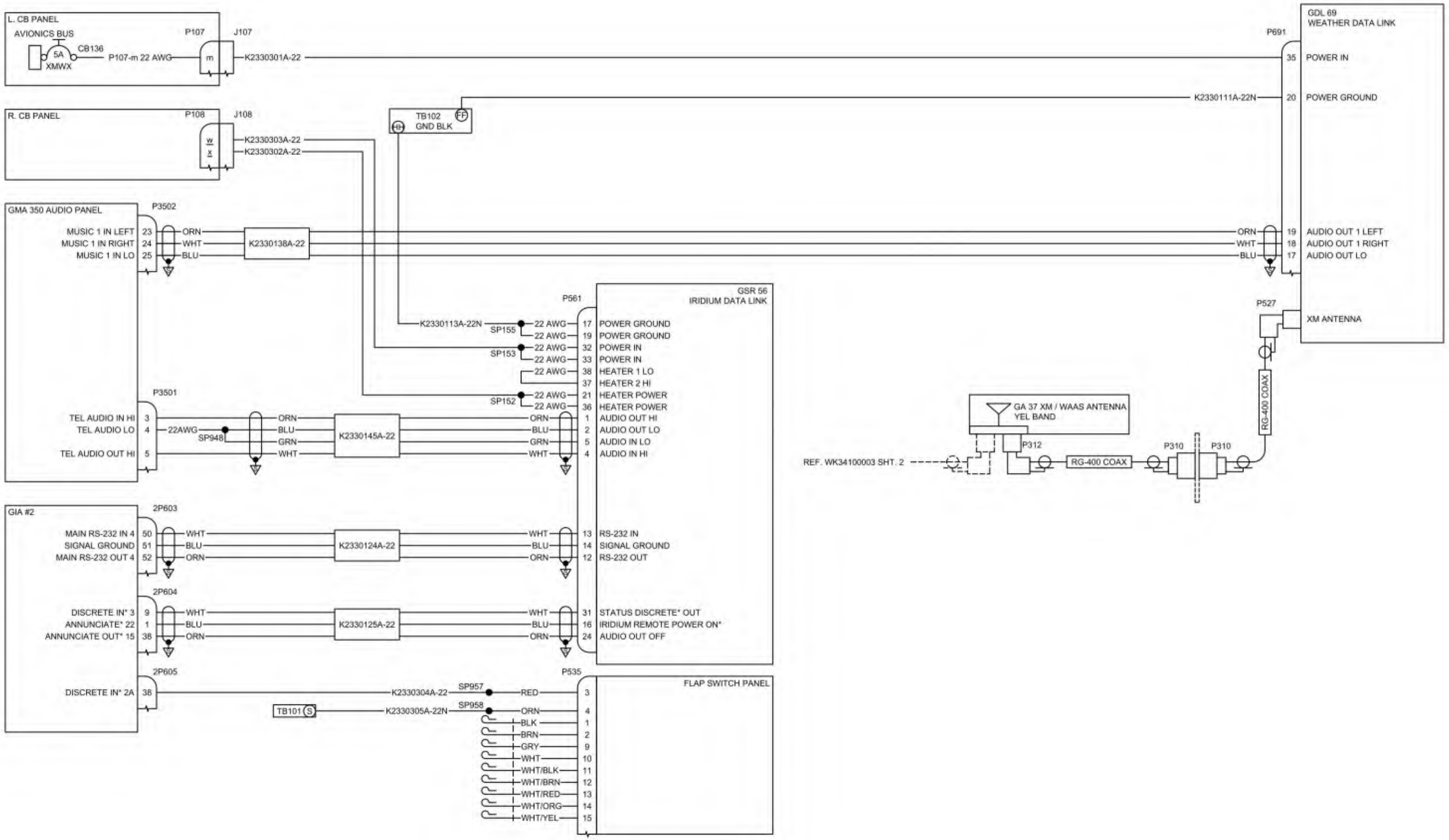

Figure 23-30.3: WK23303001-- Passenger Entertainment - GSR 56 (Optional Equipment)

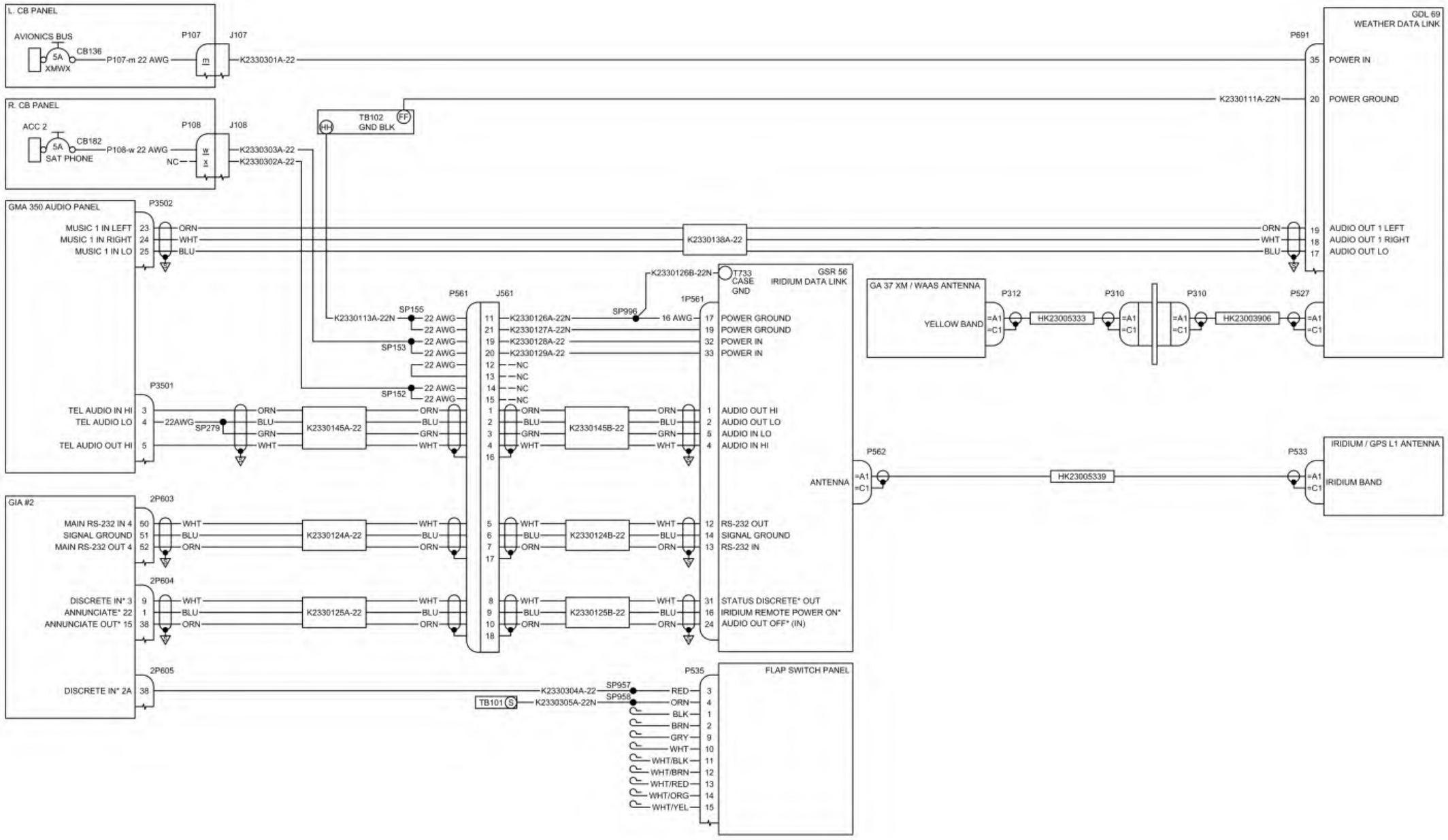

Figure 23-30.4: WK23306002-- Starlink Wiring (Optional)

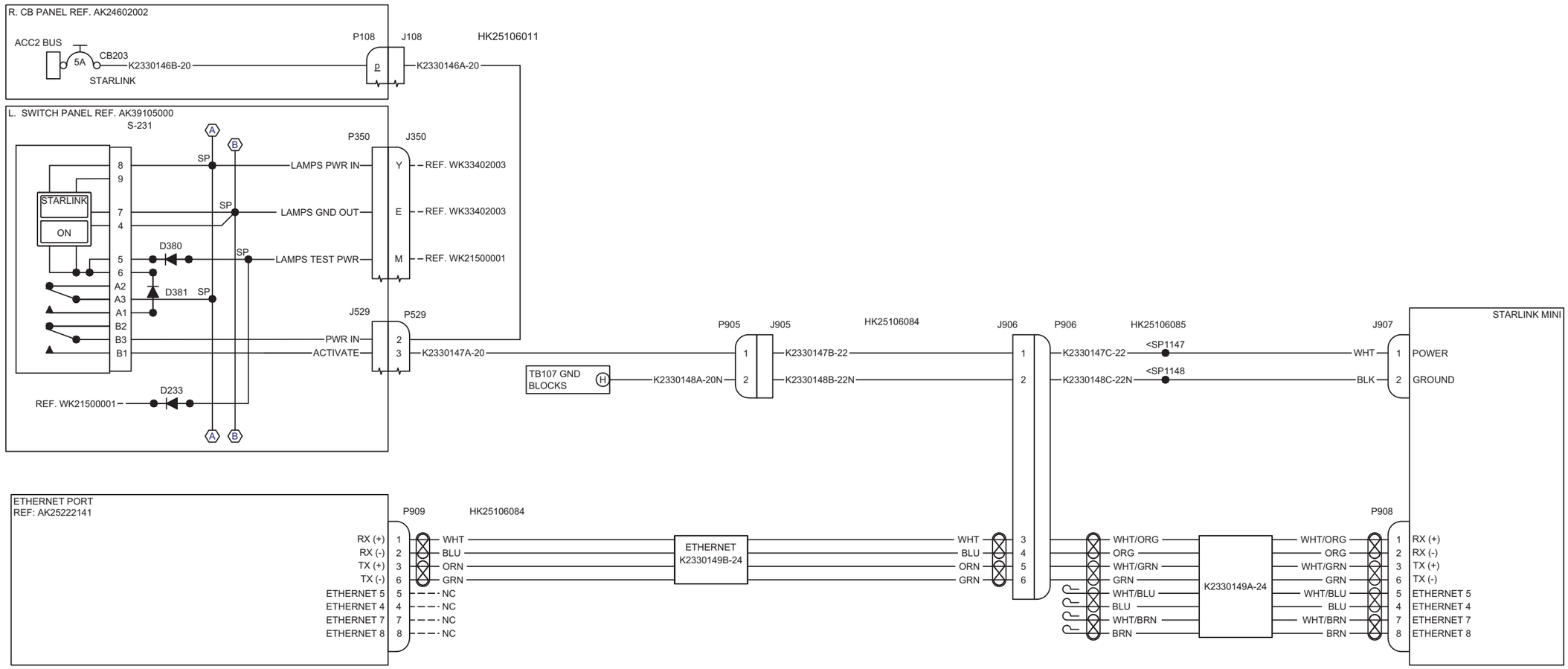

CHAPTER
24

Electrical Power

This Page Intentionally Left Blank

List of Effective Pages

Chapter/Section	Page Number	Effective Date
24-Title	Page 1	02 Jan 2020
24-Title	Page 2	02 Jan 2020
24-LOEP	Page 1	14 July 2025
24-LOEP	Page 2	02 Jan 2020
24-TOC	Page 1	17 Aug 2022
24-TOC	Page 2	02 Jan 2020
24-00	Page 1	02 Jan 2020
24-00	Page 2	02 Jan 2020
24-60	Page 1	14 July 2025
24-60	Page 2	14 July 2025
24-60	Page 3	14 July 2025
24-60	Page 4	14 July 2025
24-60	Page 5	14 July 2025
24-60	Page 6	14 July 2025
24-60	Page 7	14 July 2025
24-60	Page 8	14 July 2025
24-60	Page 9	14 July 2025
24-60	Page 10	14 July 2025

This Page Intentionally Left Blank

CHAPTER 24

Table of Contents

List of Effective Pages ..... 24-LOEP / Page 1
Table of Contents ..... 24-TOC / Page1

Paragraph **Page Number**

Electrical Power

1. General ..... 24-0 / Page 1

DC Electrical Load Generation

Figure 24-60.1: WK24600002 - - Power Generation (Sheet 1 of 5) ..... 24-60 / Page 1
Figure 24-60.2: WK24600005 - - USB Charging Circuit ..... 24-60 / Page 6
Figure 24-60.3: WK24600006 - - 12V Converter and Power Plugs ..... 24-60 / Page 7
Figure 24-60.4: CB Panel, Left (SN:K003 and On) ..... 24-60 / Page 8
Figure 24-60.5: CB Panel, Right (SN:K003 - K010 without SB-0017) ..... 24-60 / Page 9
Figure 24-60.6: CB Panel, Right (SN:K011 and On and K003-K010 with SB-0017). 24-60 / Page 10

This Page Intentionally Left Blank

ELECTRICAL POWER

1. General

The electrical system on the airplane is a 28VDC system with split bus architecture and provisions for joining the buses together through an energized contactor. Primary electrical power generation is from an engine driven 28V, 300A starter-generator. Secondary electrical power generation is from an engine driven 41A alternator. Two sealed 24V (25Ah each) lead acid batteries power the starter generator for starting the engine and act as emergency power if there is starter-generator and alternator failure. An external socket permits DC power to be given from a Ground Power Unit.

This Page Intentionally Left Blank

Figure 24-60.1: WK24600002A- Power Generation (Sheet 1 of 4)

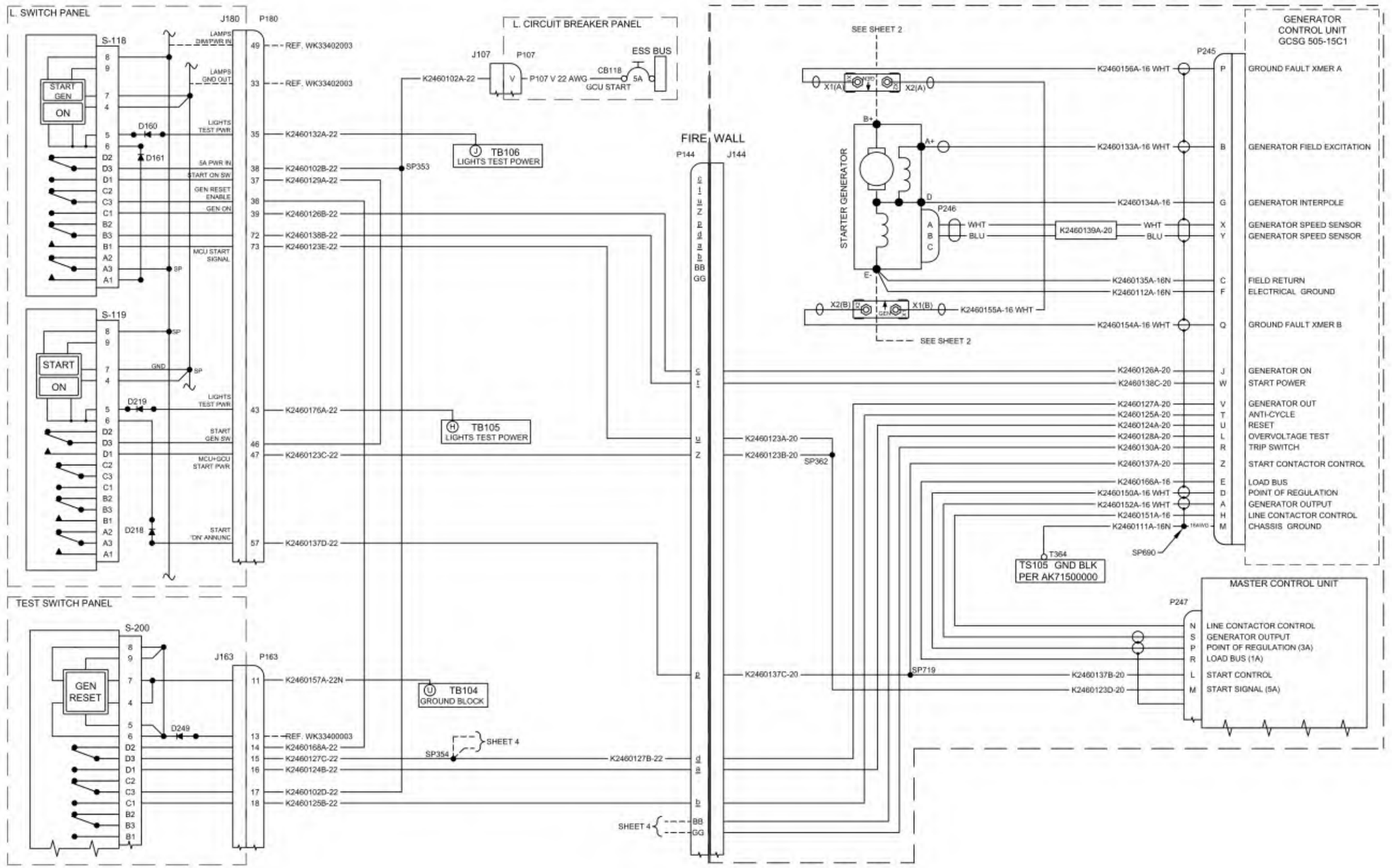

Figure 24-60.1: WK24600002A- Power Generation (Sheet 2 of 4)

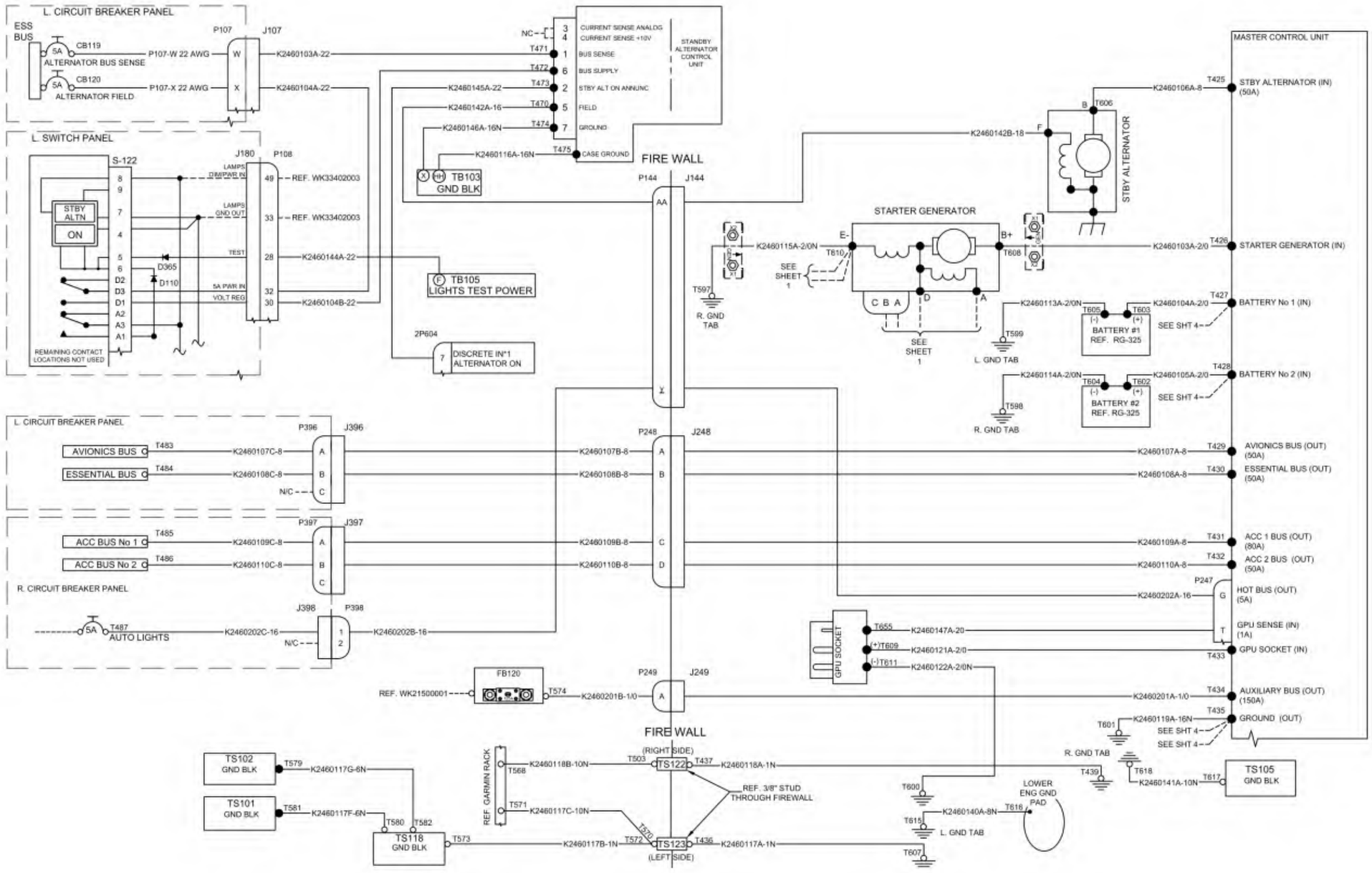

Figure 24-60.1: WK24600002A- Power Generation (Sheet 3 of 4)

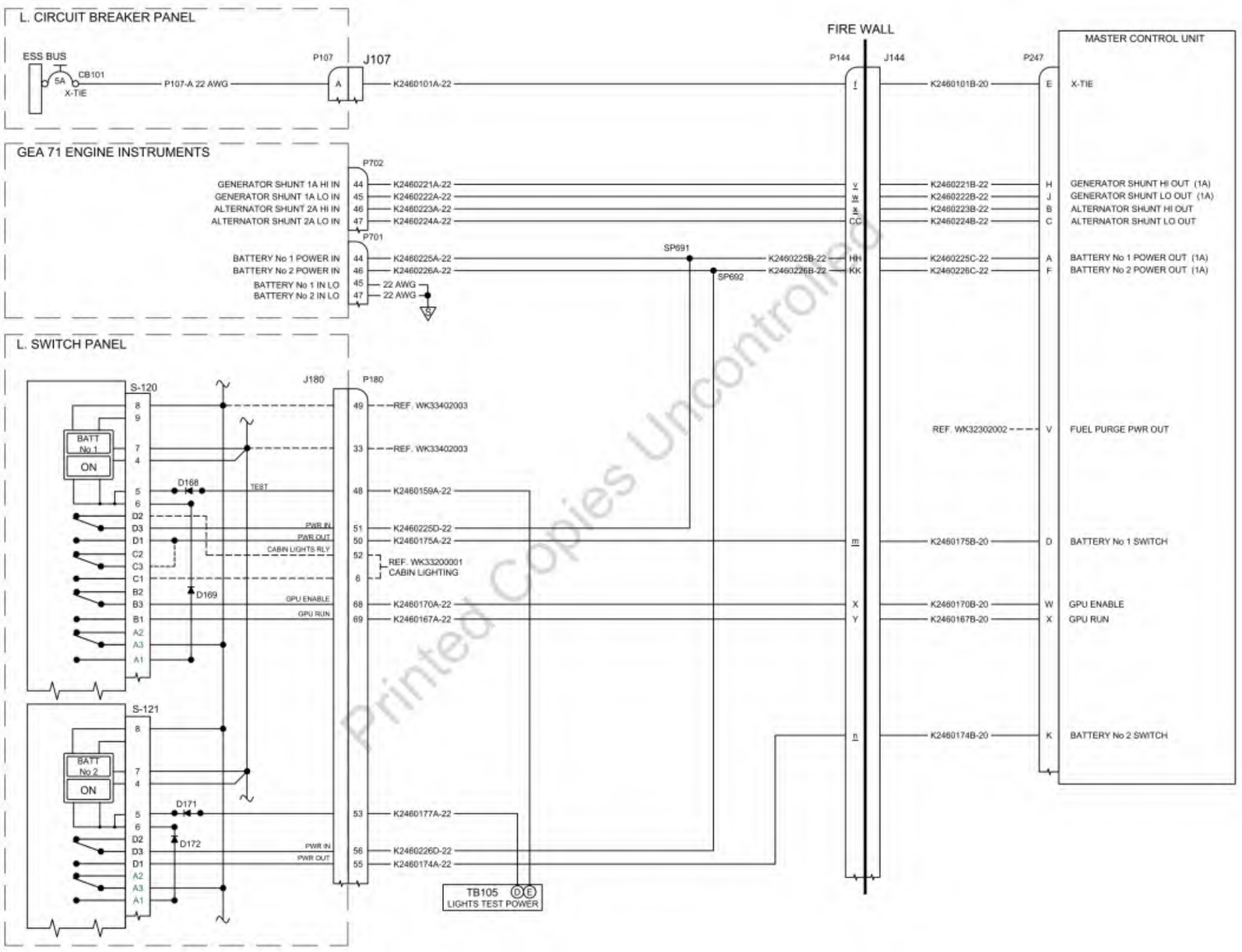

Printed Copies Uncontrolled

Figure 24-60.1: WK24600002A- Power Generation (sheet 4 of 4)

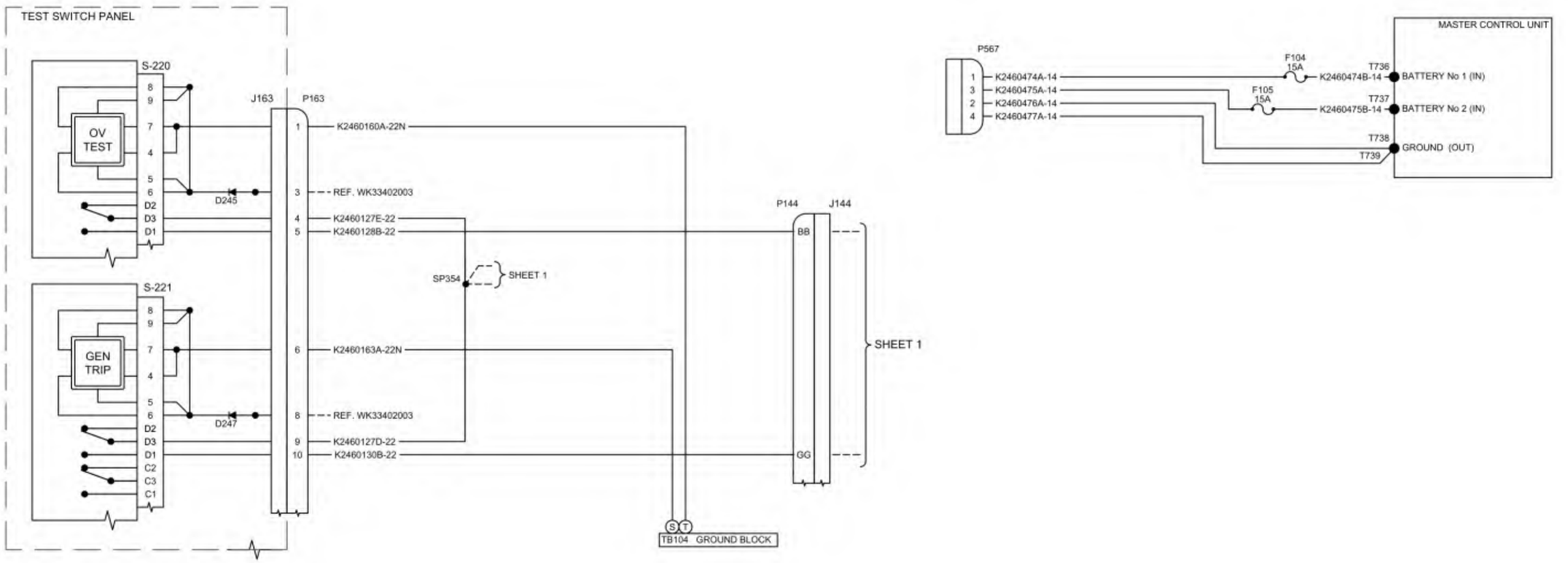

Figure 24-60.2:)WK24600005 - - USB Charging Circuit

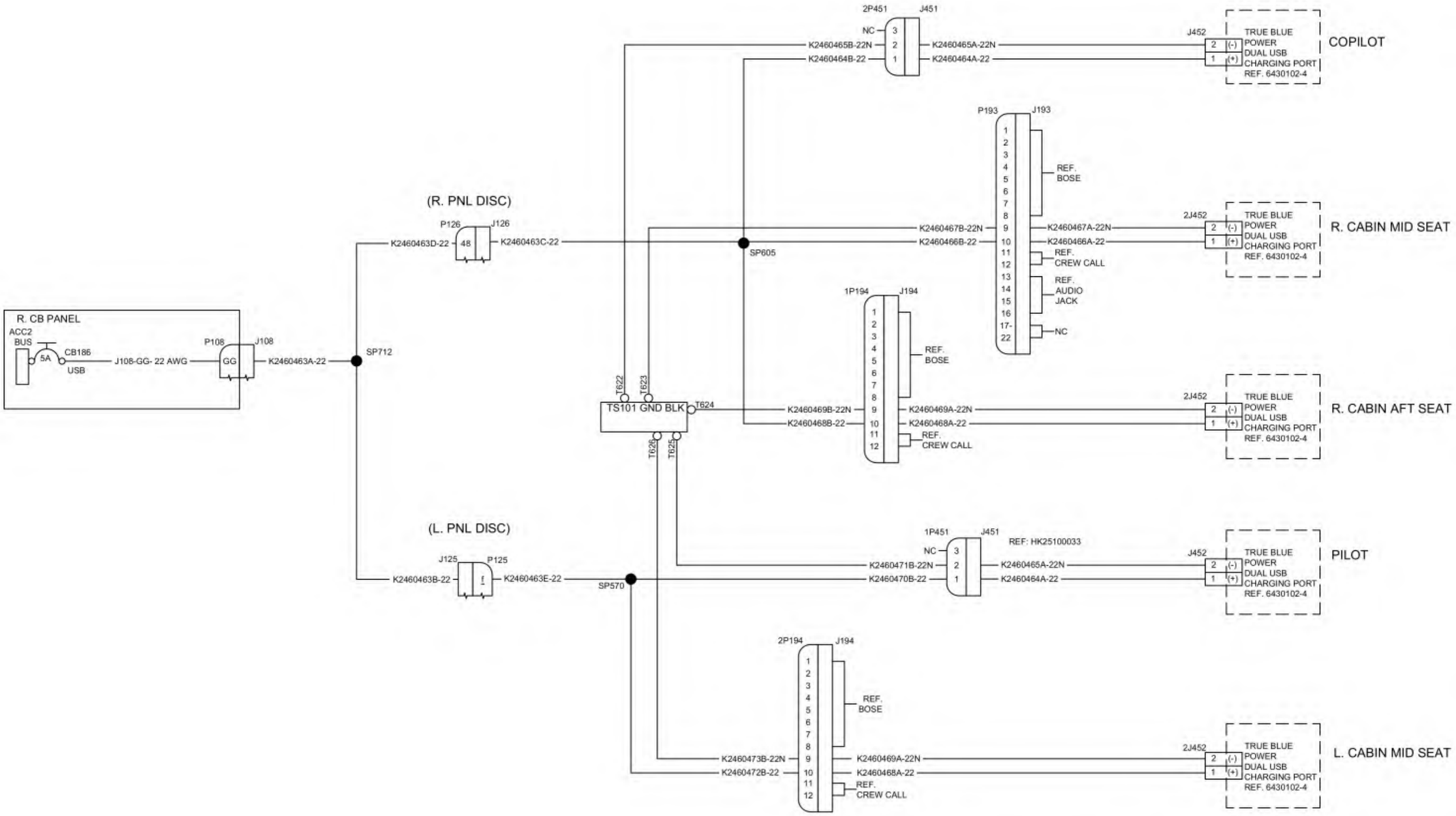

Figure 24-60.2: WK24600006 - - 12V Converter and Power Plugs

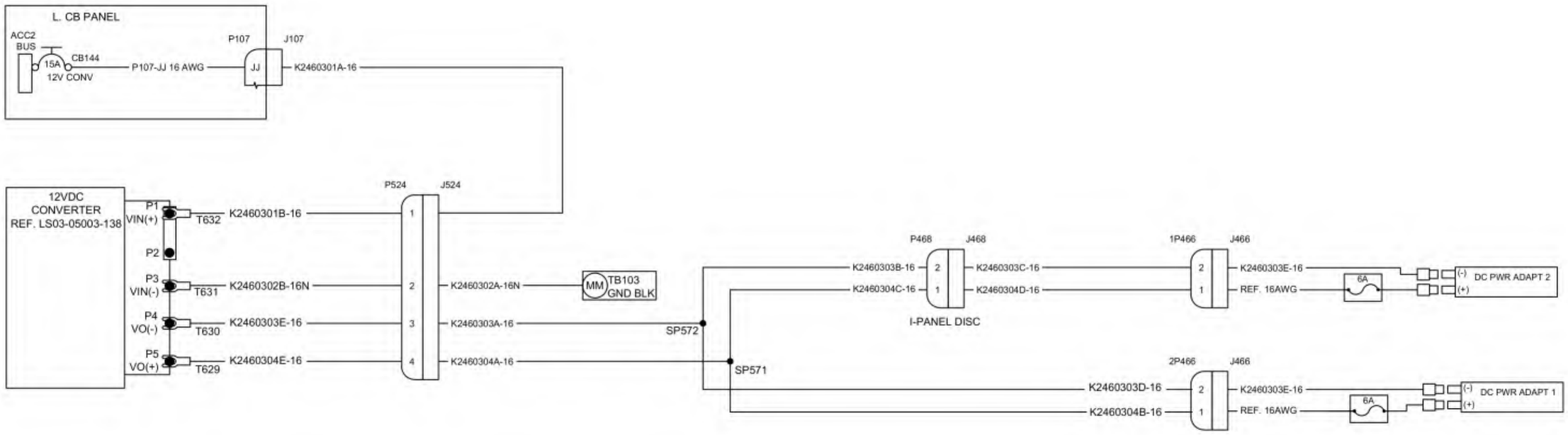

Figure 24-60.3: WK24600006 - - CB Panel, Left (SN:K003 and On)

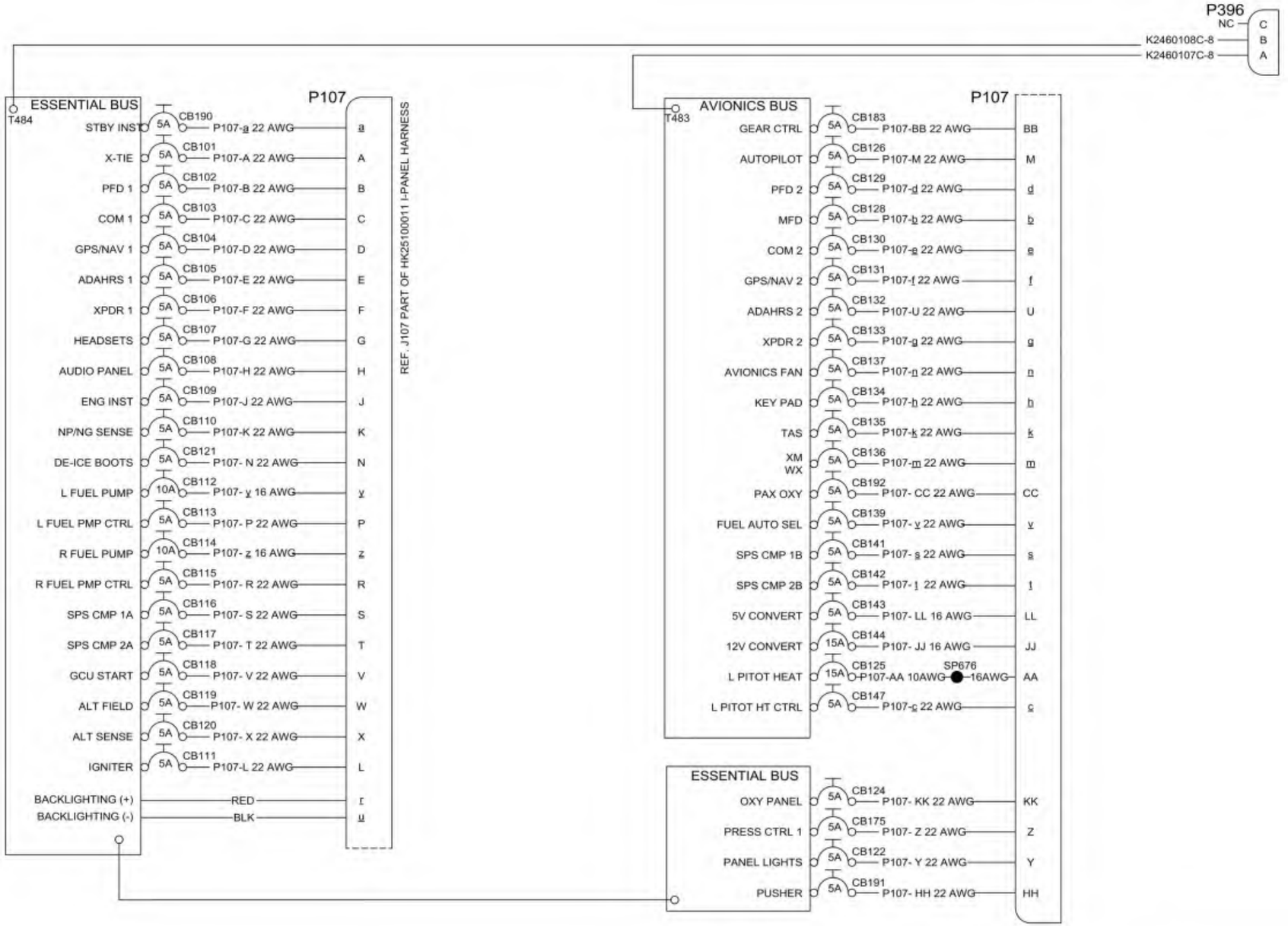

Figure 24-60.4: CB Panel, Right (SN:K003 - K010 without SB-0017)

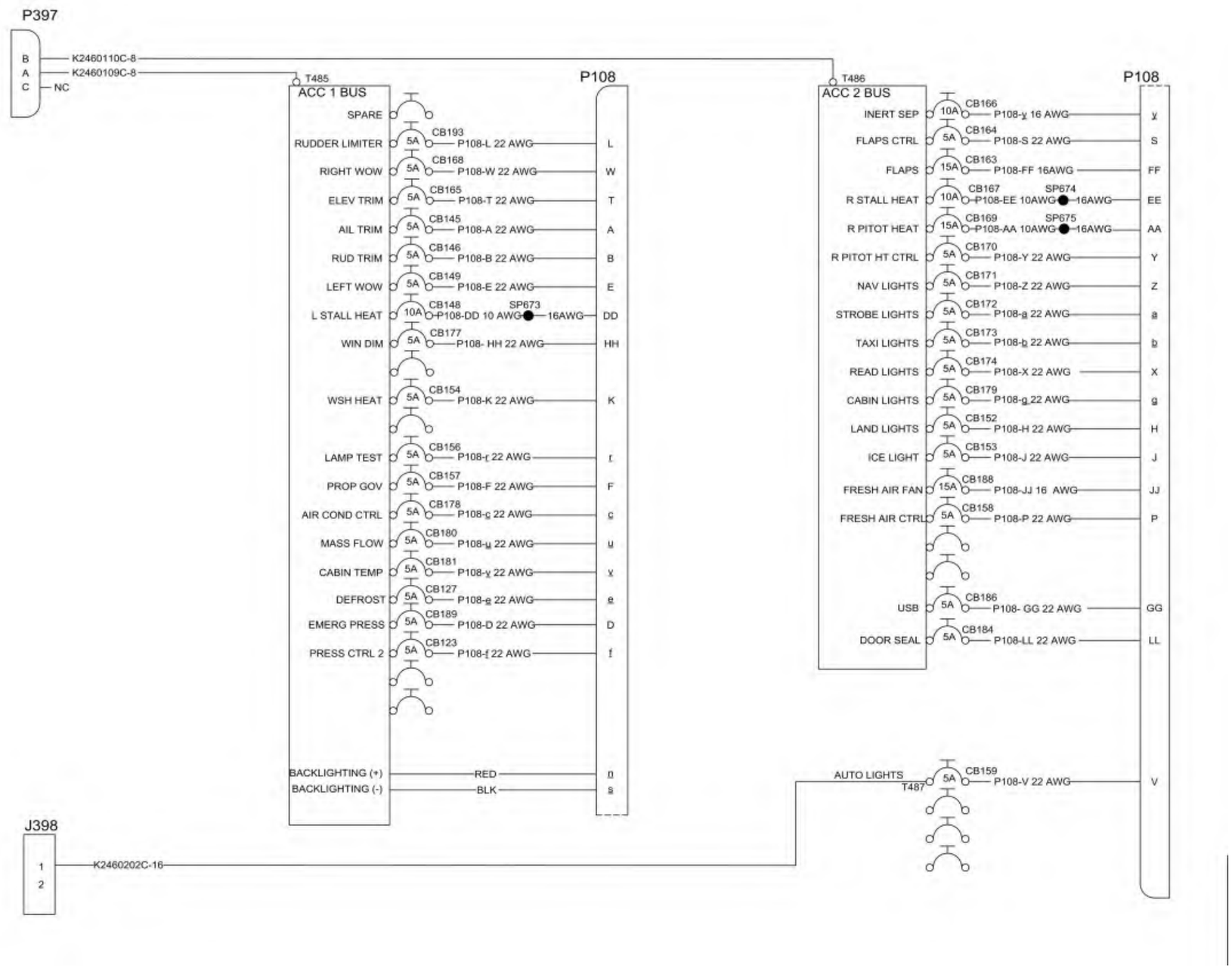

Figure 24-60.5: CB Panel, Right (SN:K011 and On and K003-K010 with SB-0017)

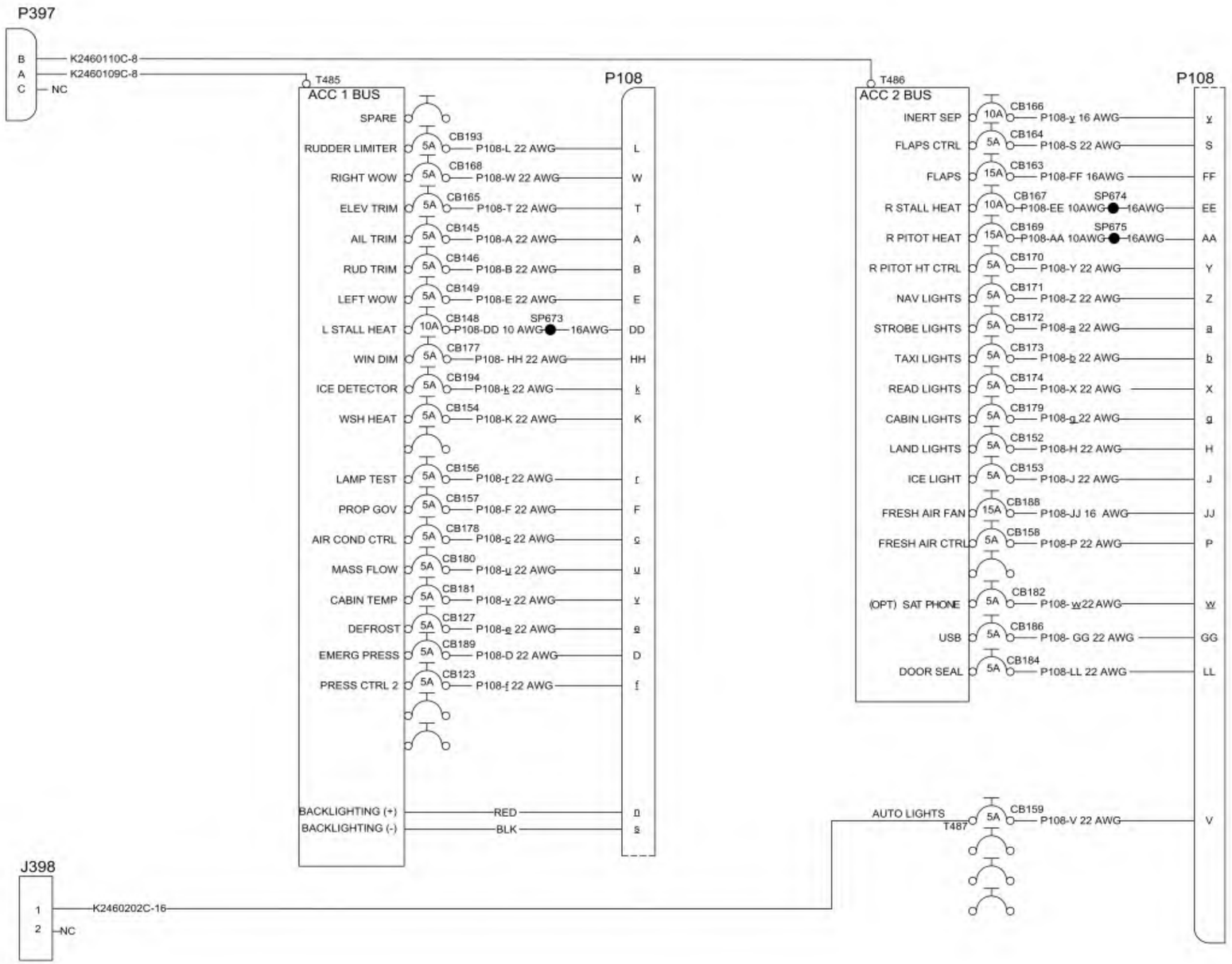

This Page Intentionally Left Blank

CHAPTER
25

Equipment/Furnishings

This Page Intentionally Left Blank

List of Effective Pages

Chapter/Section	Page Number	Effective Date
25-Title	Page 1	02 Jan 2020
25-Title	Page 2	02 Jan 2020
25-LOEP	Page 1	02 Jan 2020
25-LOEP	Page 2	02 Jan 2020
25-LOEP	Page 3	02 Jan 2020
25-LOEP	Page 4	02 Jan 2020
25-TOC	Page 1	02 Jan 2020
25-TOC	Page 2	02 Jan 2020
25-00	Page 1	02 Jan 2020
25-00	Page 2	02 Jan 2020
25-10	Page 1	02 Jan 2020
25-10	Page 2	02 Jan 2020
25-20	Page 1	02 Jan 2020
25-20	Page 2	02 Jan 2020

This Page Intentionally Left Blank

CHAPTER 25

Table of Contents

List of Effective Pages ..... 25-LOEP / Page 1
Table of Contents ..... 25-TOC / Page1

Paragraph **Page Number**

Equipment/Furnishings

1. General ..... 25-00 / Page 1

Flight Compartment

Figure 25-10.1: WK25100001-1 5 Port Cooling Fan ..... 25-10 / Page 1

Passenger Compartment

Figure 25-20.1: WK23200001-1 Emergency Locator Transmitter ..... 25-20 / Page 1

This Page Intentionally Left Blank

EQUIPMENT AND FURNISHINGS

1. General

The airplane interior equipment and furnishings are cabin and cockpit seating, seat belts, carpet, interior panels, trim, center and side console panels, emergency equipment, and the baggage compartment.

This Page Intentionally Left Blank

Figure 25-10.1: WK25100001-1 5 Port Cooling Fan

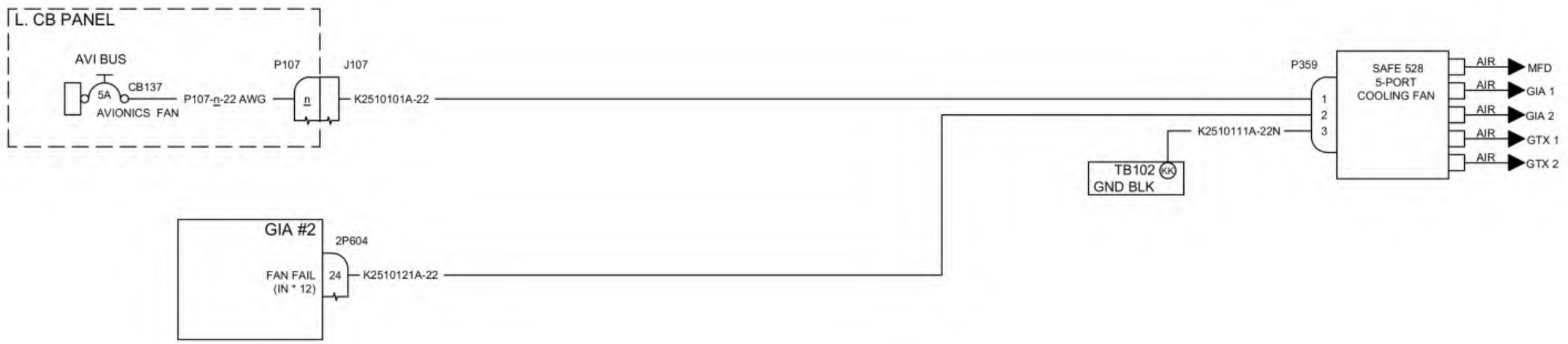

This Page Intentionally Left Blank

Figure 25-20.1: WK23200001-1 Emergency Locator Transmitter

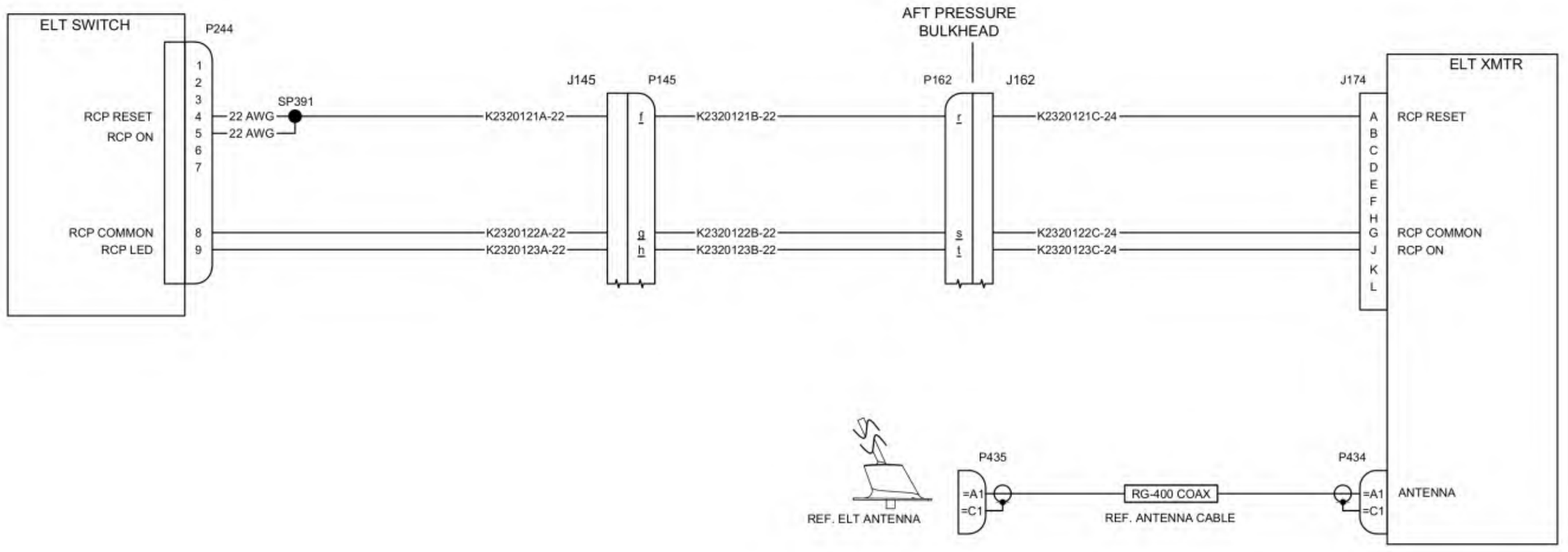

This Page Intentionally Left Blank

CHAPTER
27

Flight Controls

This Page Intentionally Left Blank

List of Effective Pages

Chapter/Section	Page Number	Effective Date
27-Title	Page 1	02 Jan 2020
27-Title	Page 2	02 Jan 2020
27-LOEP	Page 1	14 July 2025
27-LOEP	Page 2	02 Jan 2020
27-TOC	Page 1	17 Aug 2022
27-TOC	Page 2	17 Aug 2022
27-00	Page 1	02 Jan 2020
27-00	Page 2	02 Jan 2020
27-10	Page 1	02 Jan 2020
27-10	Page 2	02 Jan 2020
27-20	Page 1	14 Jul 2021
27-20	Page 2	02 Jan 2020
27-20	Page 3	14 Jul 2021
27-20	Page 4	14 Jul 2021
27-20	Page 5	14 Jul 2021
27-20	Page 6	14 Jul 2021
27-30	Page 1	14 Jul 2021
27-30	Page 2	14 Jul 2021
27-30	Page 3	14 Jul 2021
27-30	Page 4	14 Jul 2021
27-40	Page 1	02 Jan 2020
27-40	Page 2	14 July 2025
27-40	Page 3	14 July 2025
27-40	Page 4	02 Jan 2020
27-40	Page 5	02 Jan 2020
27-40	Page 6	02 Jan 2020
27-50	Page 1	17 Aug 2022
27-50	Page 2	17 Aug 2022
27-50	Page 3	17 Aug 2022
27-50	Page 4	17 Aug 2022
27-50	Page 5	17 Aug 2022
27-50	Page 6	17 Aug 2022

This Page Intentionally Left Blank

CHAPTER 27

Table of Contents

List of Effective Pages ..... 27-LOEP / Page 1
Table of Contents ..... 27-TOC / Page1

Paragraph **Page Number**

Equipment/Furnishings

1. General ..... 27-00 / Page 1

Aileron and Tab

Figure 27-10.1: WK27100001 - - Aileron Trim System ..... 27-10 / Page 1

Rudder and Tab

Figure 27-20.1: WK27200001-- Rudder Trim System (SN: K003-K010) ..... 27-20 / Page 1
Figure 27-20.2: WK27200002-- Rudder Limiter ..... 27-20 / Page 2
Figure 27-20.3: WK27202001-- (Sheet 1 of 3) Rudder Trim System (SN: K011 and On, and K003-K010 with SB-0017) ..... 27-20 / Page 3

Elevator and Tab

Figure 27-30.1: WK27300001-- Elevator Trim System (SN: K003-K010) ..... 27-30 / Page 1
Figure 27-30.2: WK27202001-- (Sheet 1 of 3) Elevator Trim System (SN: K011 and On, and K003-K010 with SB-0017) ..... 27-30 / Page 2

Horizontal Stabilizer

Figure 27-40.1: WK27400001-- Trim Disconnect (SN: K003-K010) ..... 27-40 / Page 1
Figure 27-40.2: WK27401001-- (Sheet 1 of 2) Trim Disconnect (SN: K011-K012, and K003-K010 with SB-0017) ..... 27-40 / Page 2
Figure 27-40.3: WK27402001-- (Sheet 1 of 2) Trim Disconnect (SN: K014 and On) .. 27-40 / Page 4

Flaps

Figure 27-50.1: WK27500001-- Flap System (SN: K003-K010 without SB-0017, SB-0029, or SB-0034) ..... 27-50 / Page 1
Figure 27-50.2: WK27500001A- Flap System (SN: K003-K010 without SB-0017 or SB-0029, and with SB-0034) (Sheet 1 of 2) ..... 27-50 / Page 2
Figure 27-50.3: WK27502001-- Flap System (SN: K011and On, and K003-K010 with SB-0017 or SB-0029, and without SB-0034) ..... 27-50 / Page 4
Figure 27-50.4: WK27502001A- Flap System (SN: K011 and On with SB-0034, and K003-K010 with SB-0017 or SB-0029, and SB-0034) (Sheet 1 of 2) ..... 27-50 / Page 5

FLIGHT CONTROLS

1. General

Flight attitude control of the aircraft is done by elevators, ailerons, and a rudder - all with electrically controlled trim tabs. Both the pilot and the copilot have fully functional control yokes and rudder pedals. The rudder pedals also have brake master cylinders which are part of a braking system for the aircraft.

This Page Intentionally Left Blank

Figure 27-10.1: WK27100001-1 Aileron Trim System

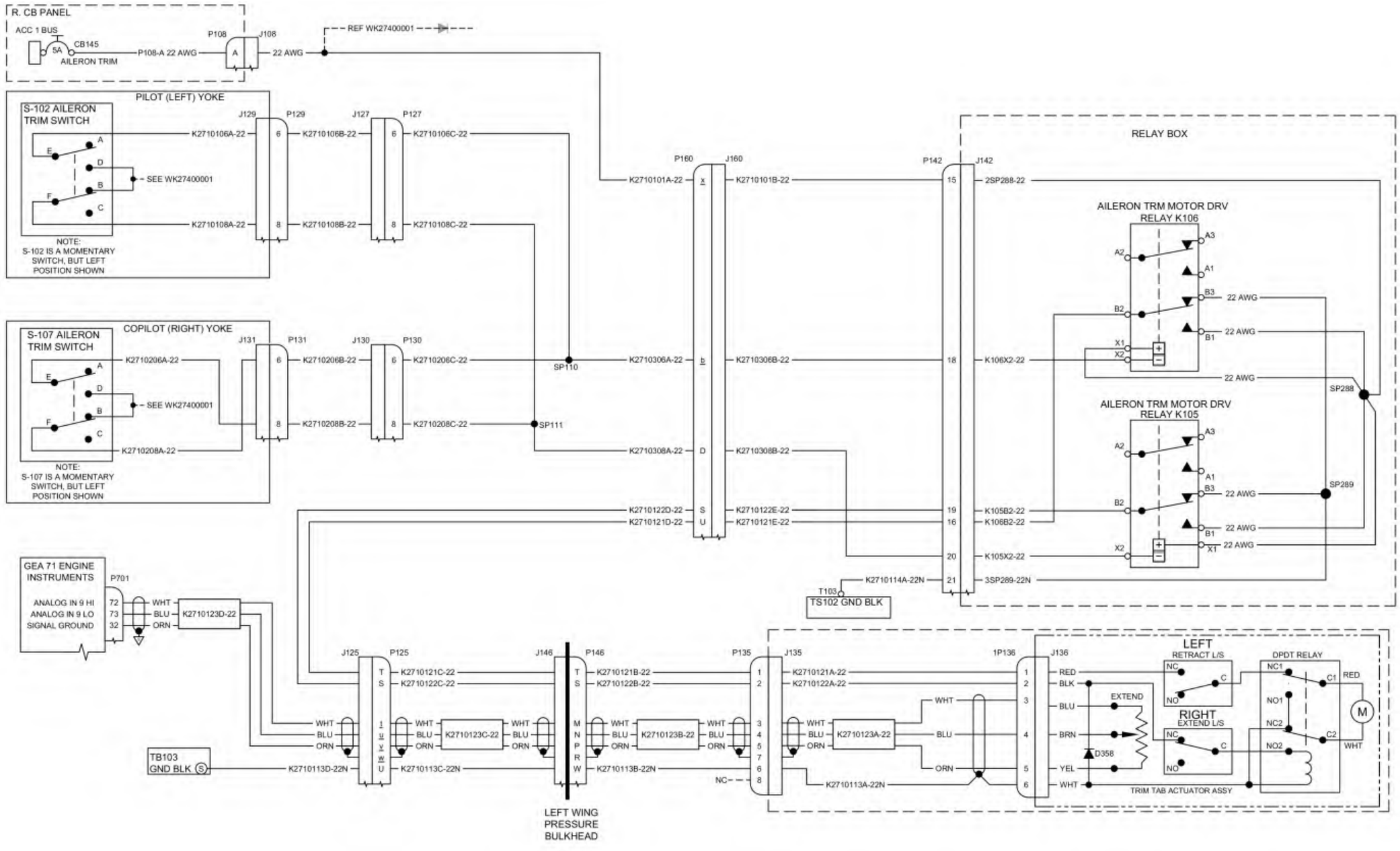

This Page Intentionally Left Blank

Figure 27-20.1: WK27200001-- Rudder Trim System (SN: K003-K010)

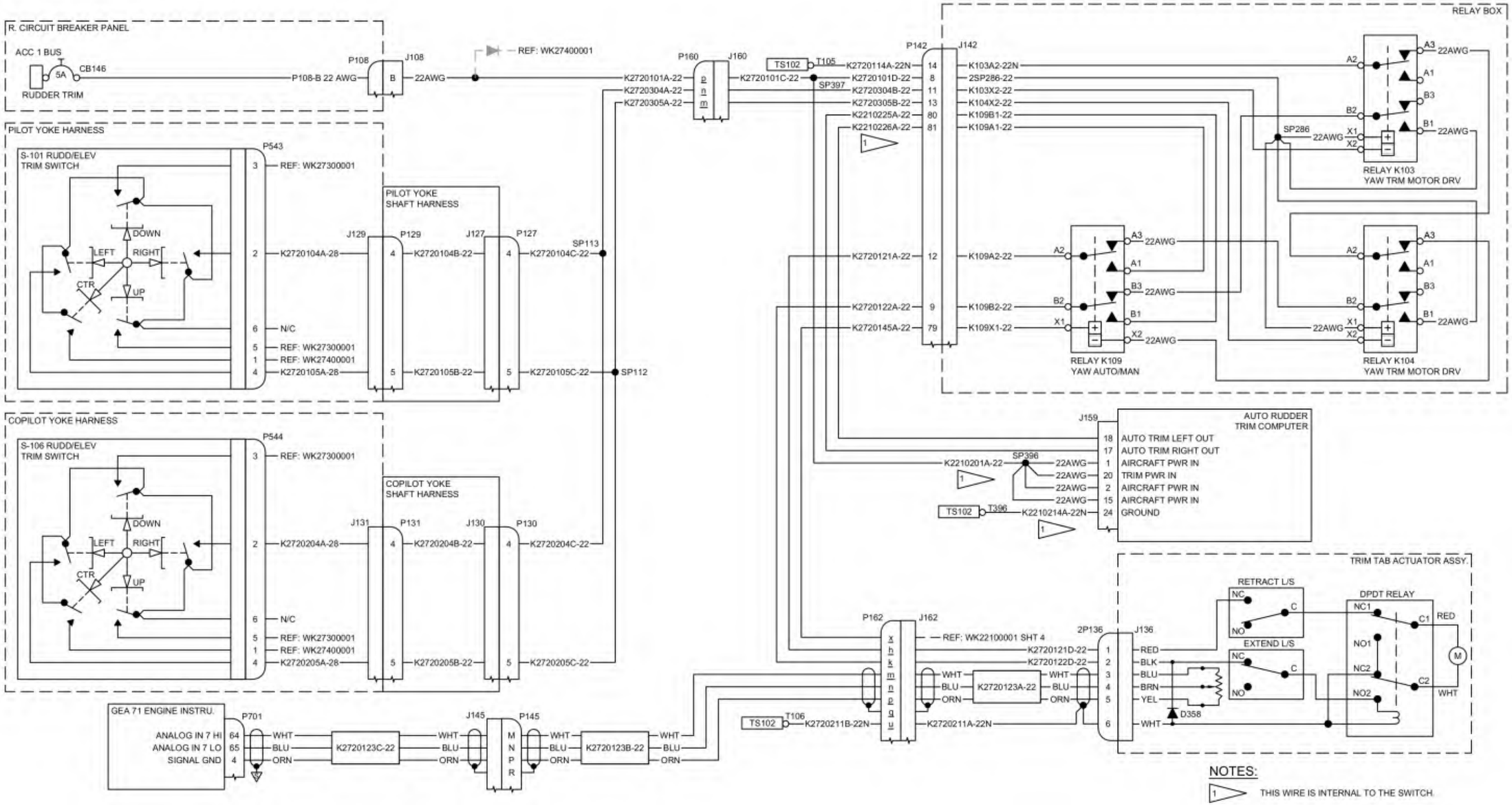

Figure 27-20.2: WK27200002-1 Rudder Limiter

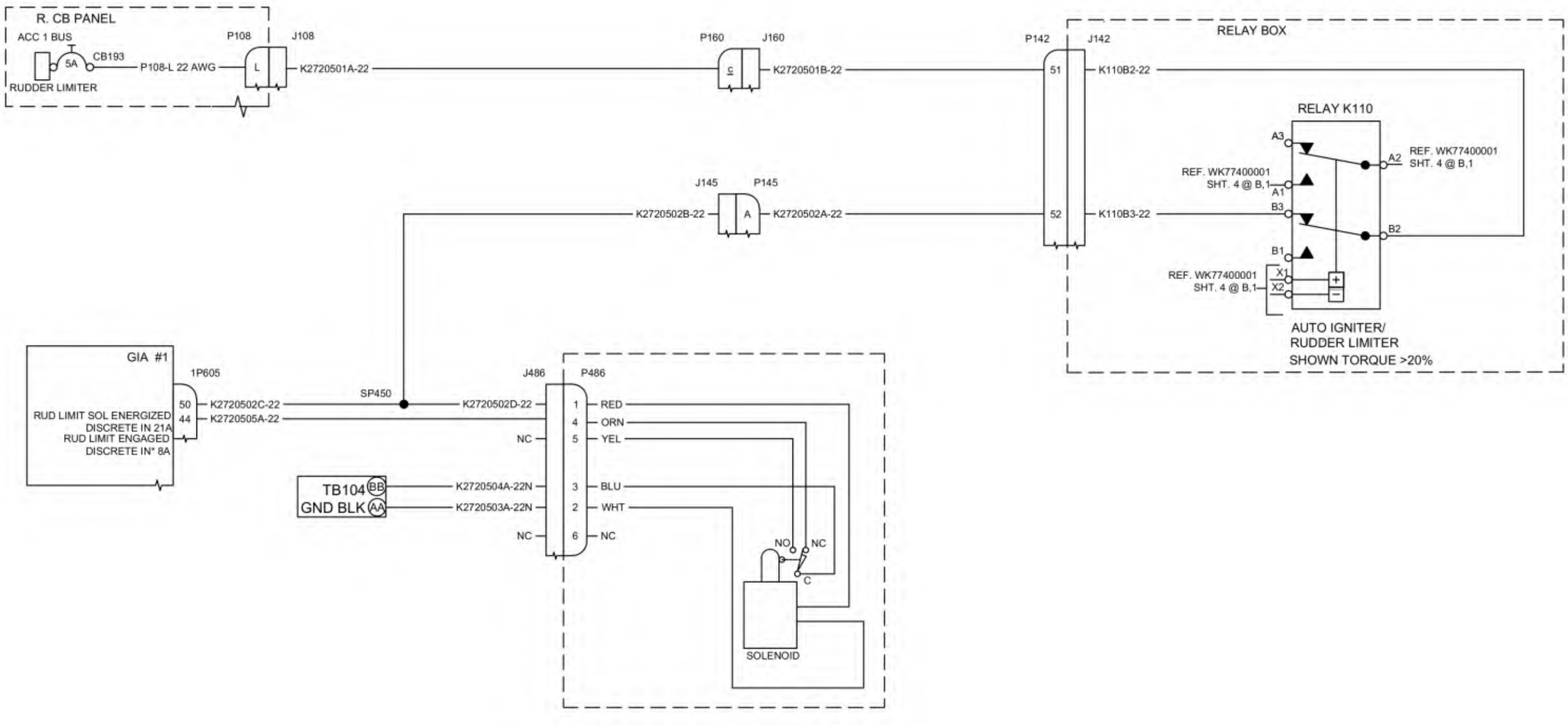

Figure 27-20.3: WK27202001-- (Sheet 1 of 3) Rudder Trim System (SN: K011 and On, and K003-K010 with SB-0017)

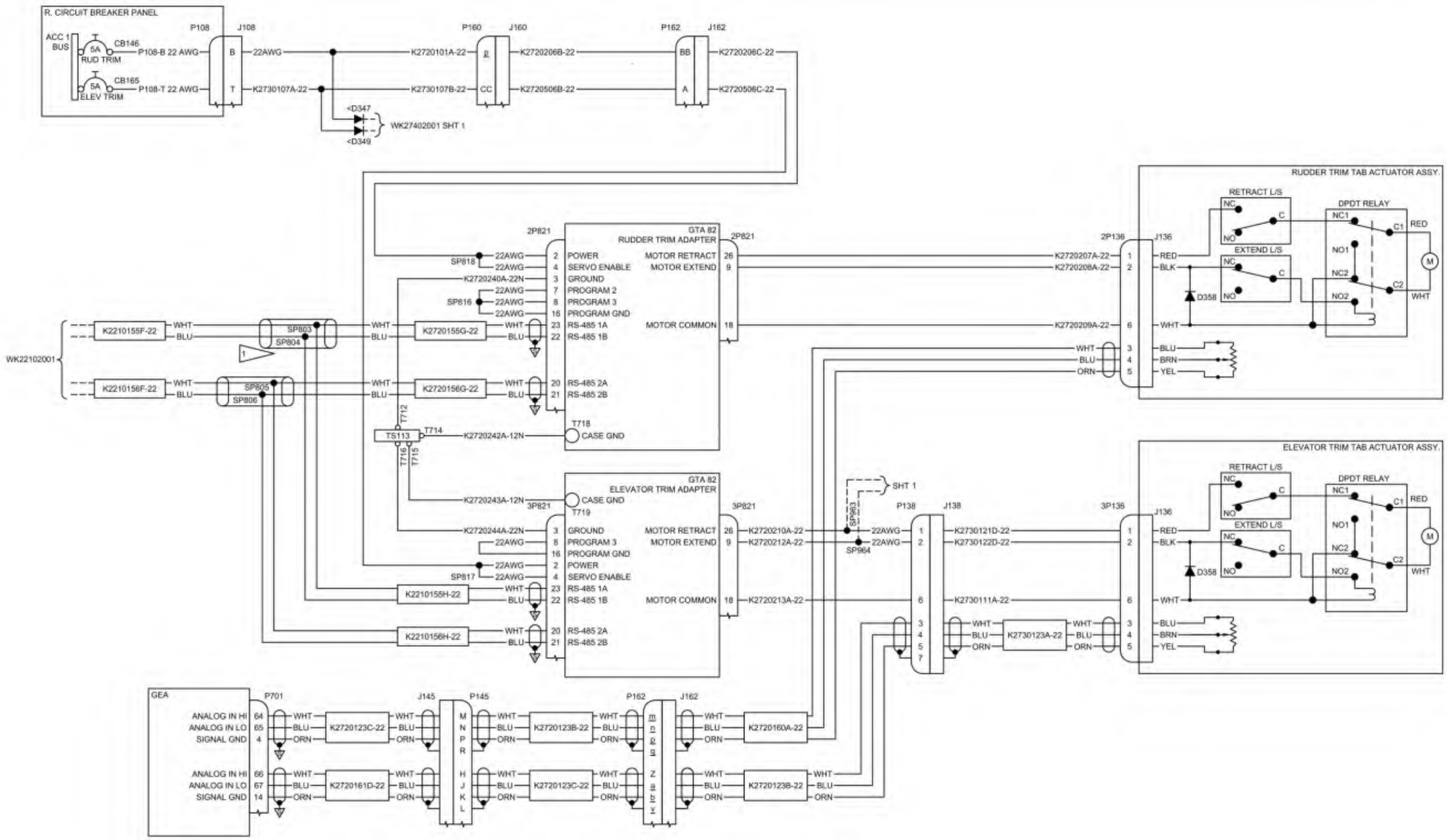

Figure 27-20.3: WK27202001-- (Sheet 2 of 3) Rudder Trim System (SN: K011 and On, and K003-K010 with SB-0017)

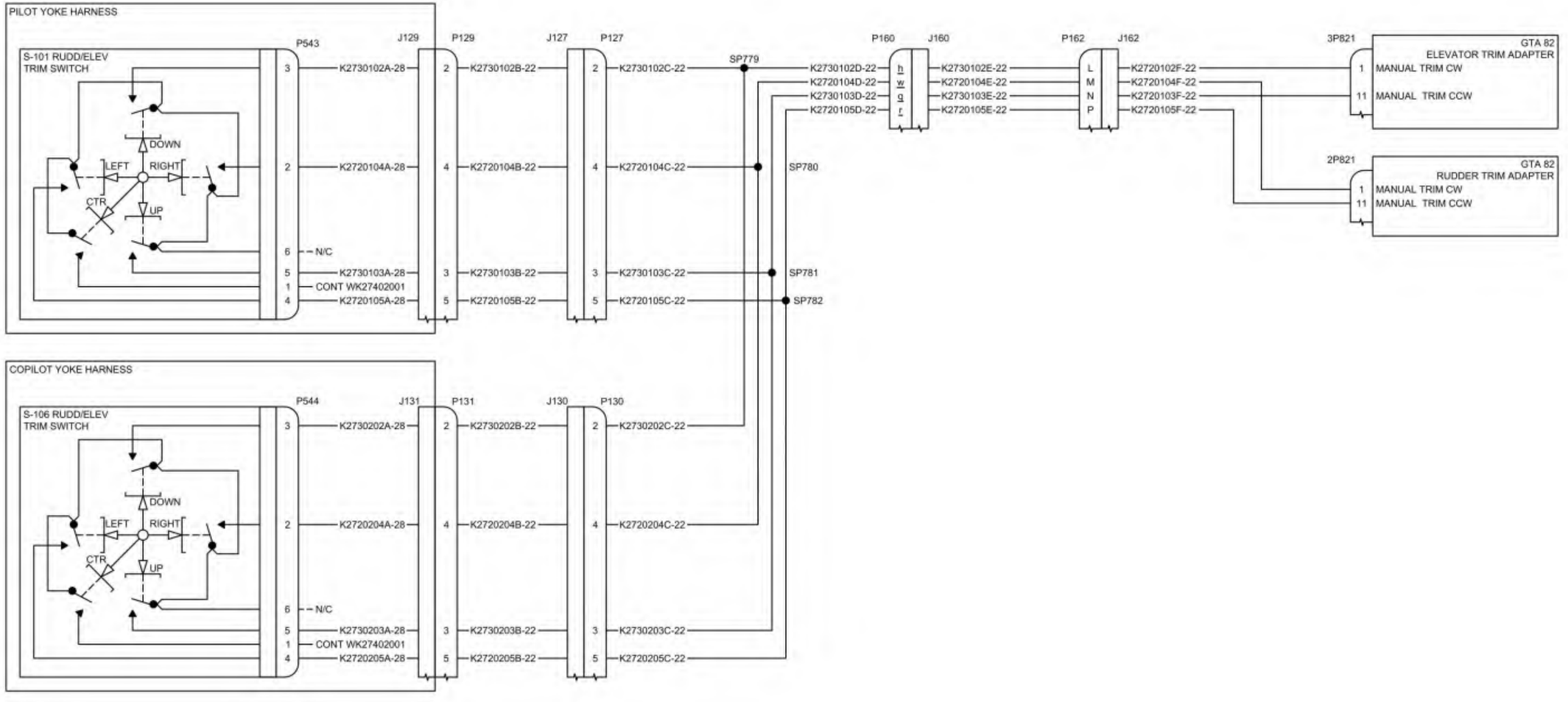

Figure 27-20.3: WK27202001-- (Sheet 3 of 3) Rudder Trim System (SN: K011 and On, and K003-K010 with SB-0017)

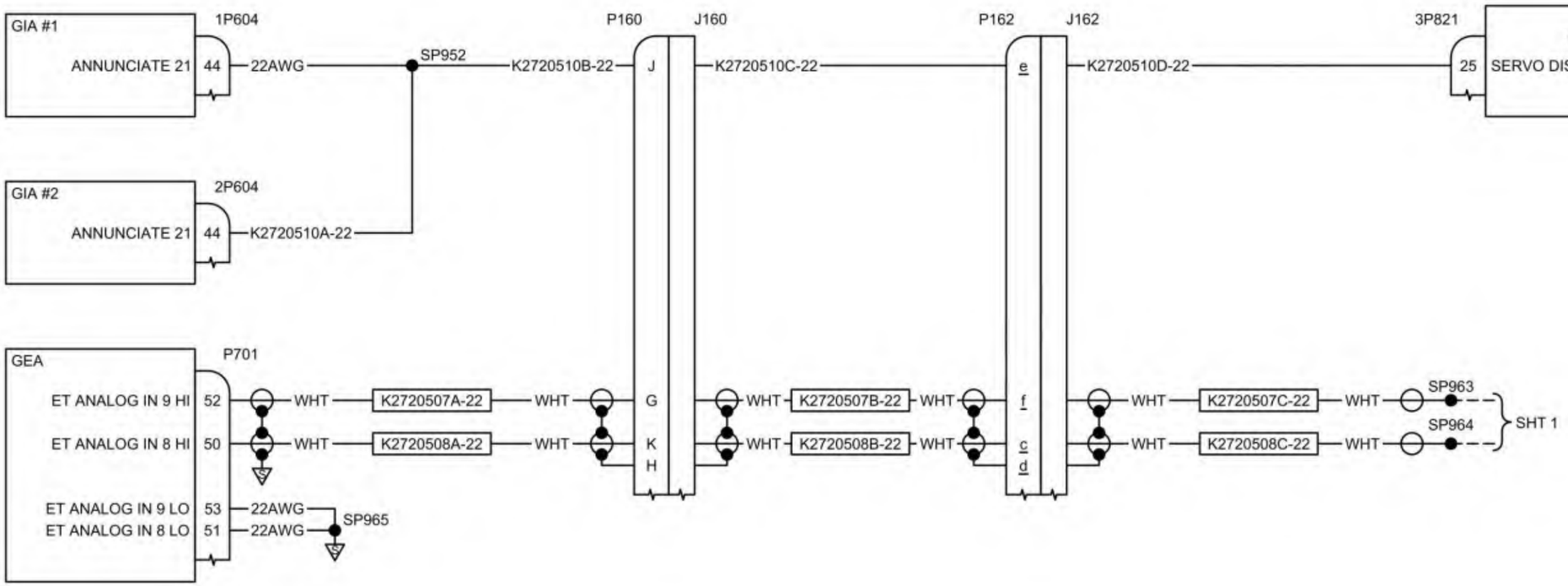

This Page Intentionally Left Blank

Figure 27-30.1: WK27300001-1 Elevator Trim System (SN: K003-K010)

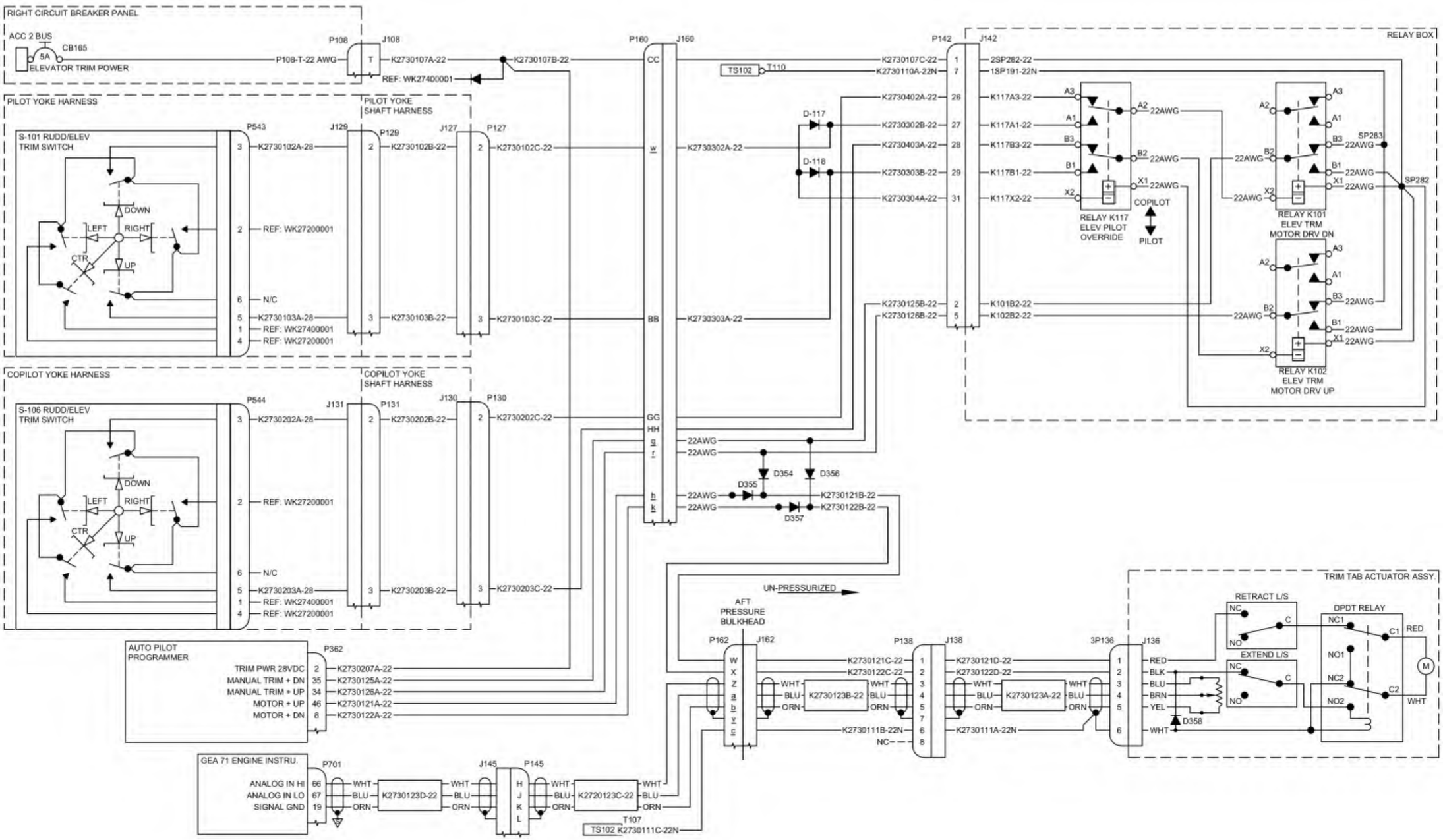

Figure 27-30.2: WK27202001-- (Sheet 1 of 3) Elevator Trim System (SN: K011 and On, and K003-K010 with SB-0017)

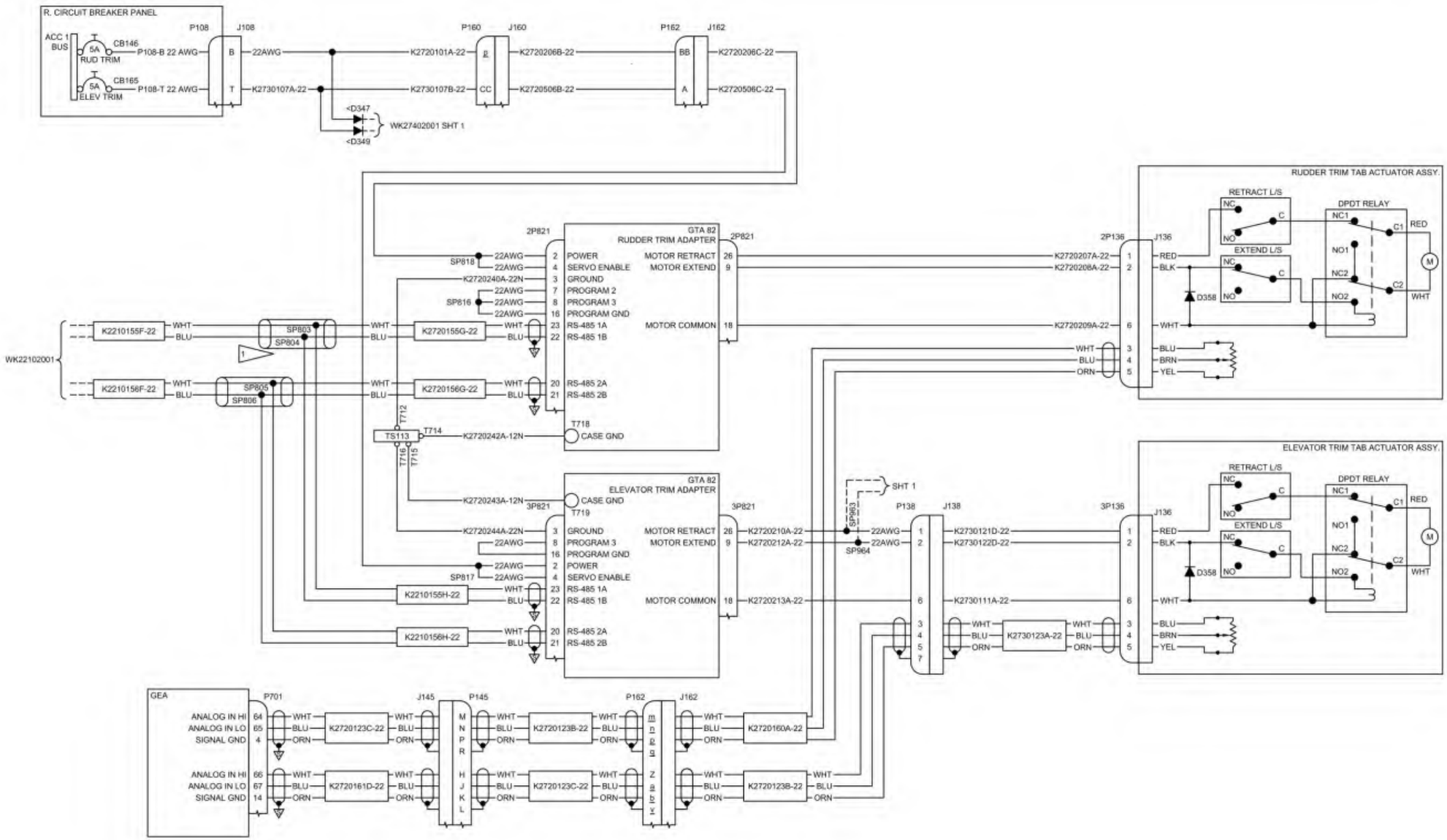

Figure 27-30.2: WK27202001-- (Sheet 2 of 3) Elevator Trim System (SN: K011 and On, and K003-K010 with SB-0017)

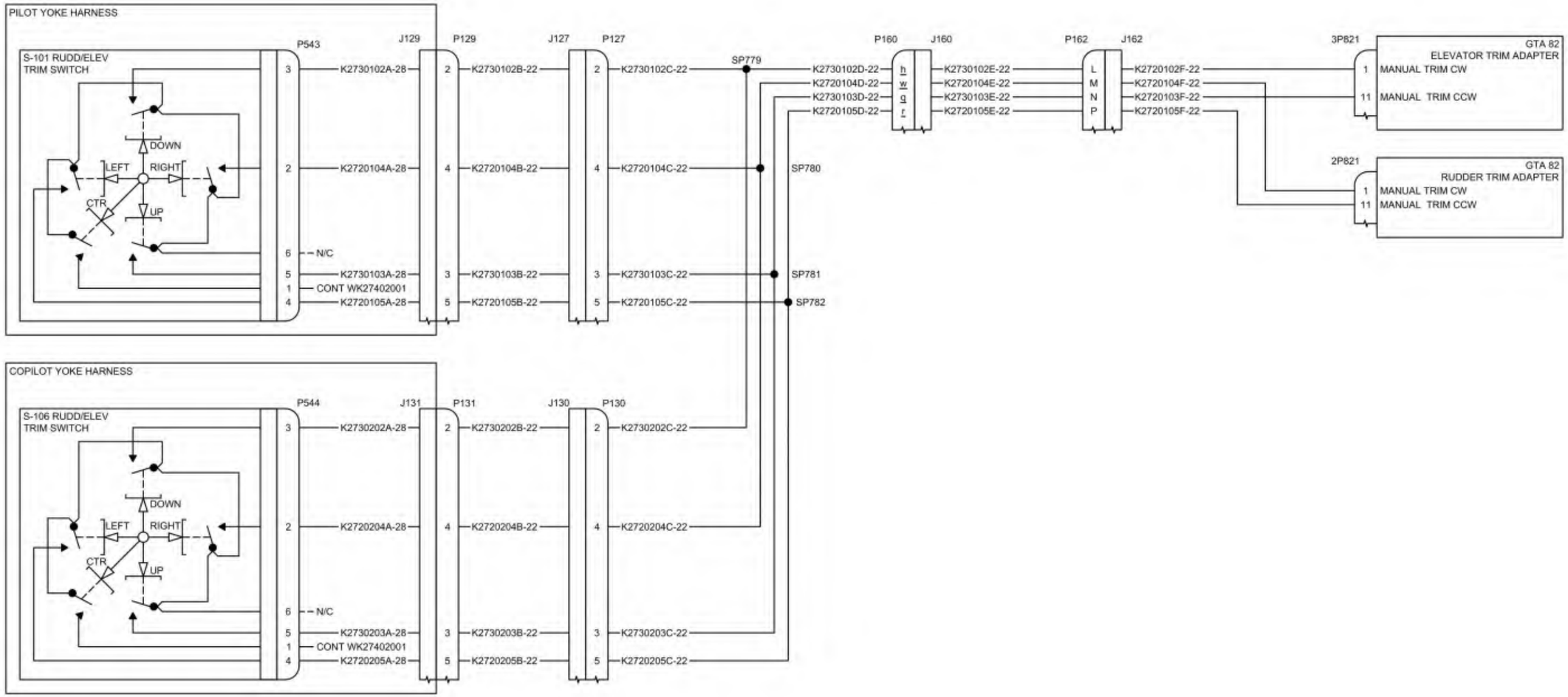

Figure 27-30.2: WK27202001-- (Sheet 3 of 3) Elevator Trim System (SN: K011 and On, and K003-K010 with SB-0017)

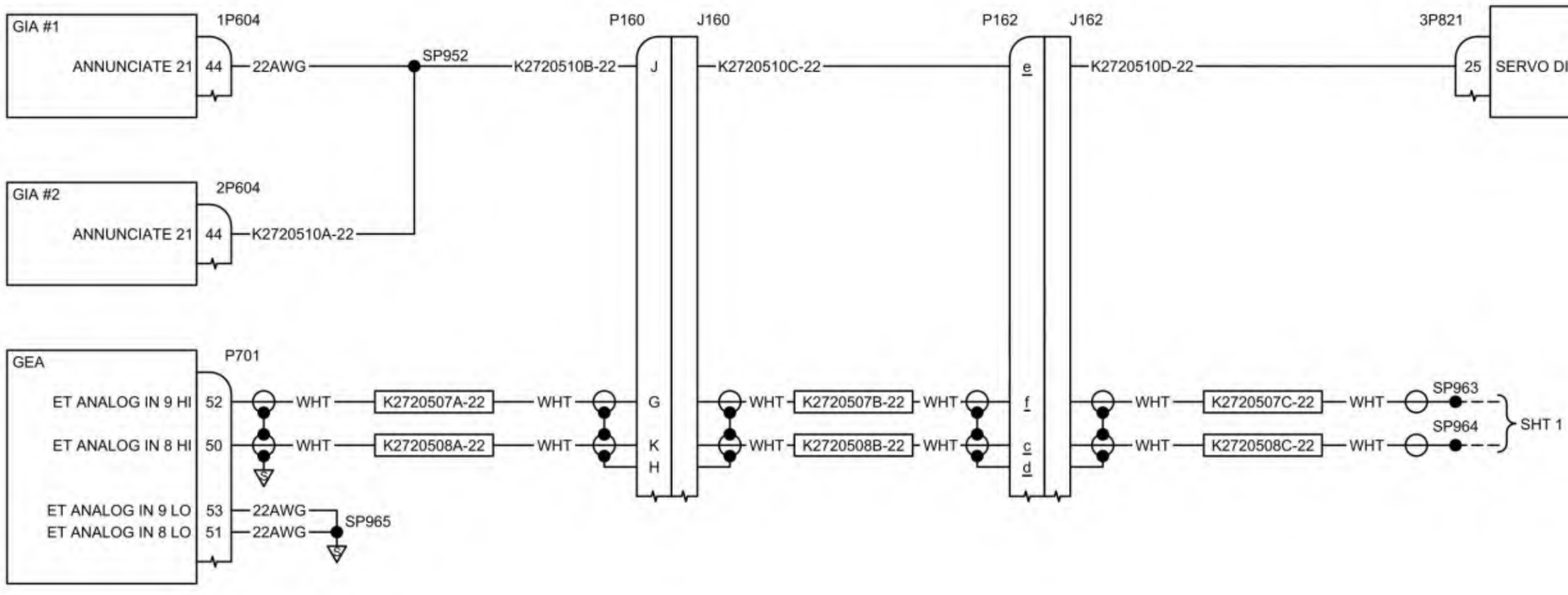

Figure 27-40.1: WK27400001-- Trim Disconnect (SN: K003-K010)

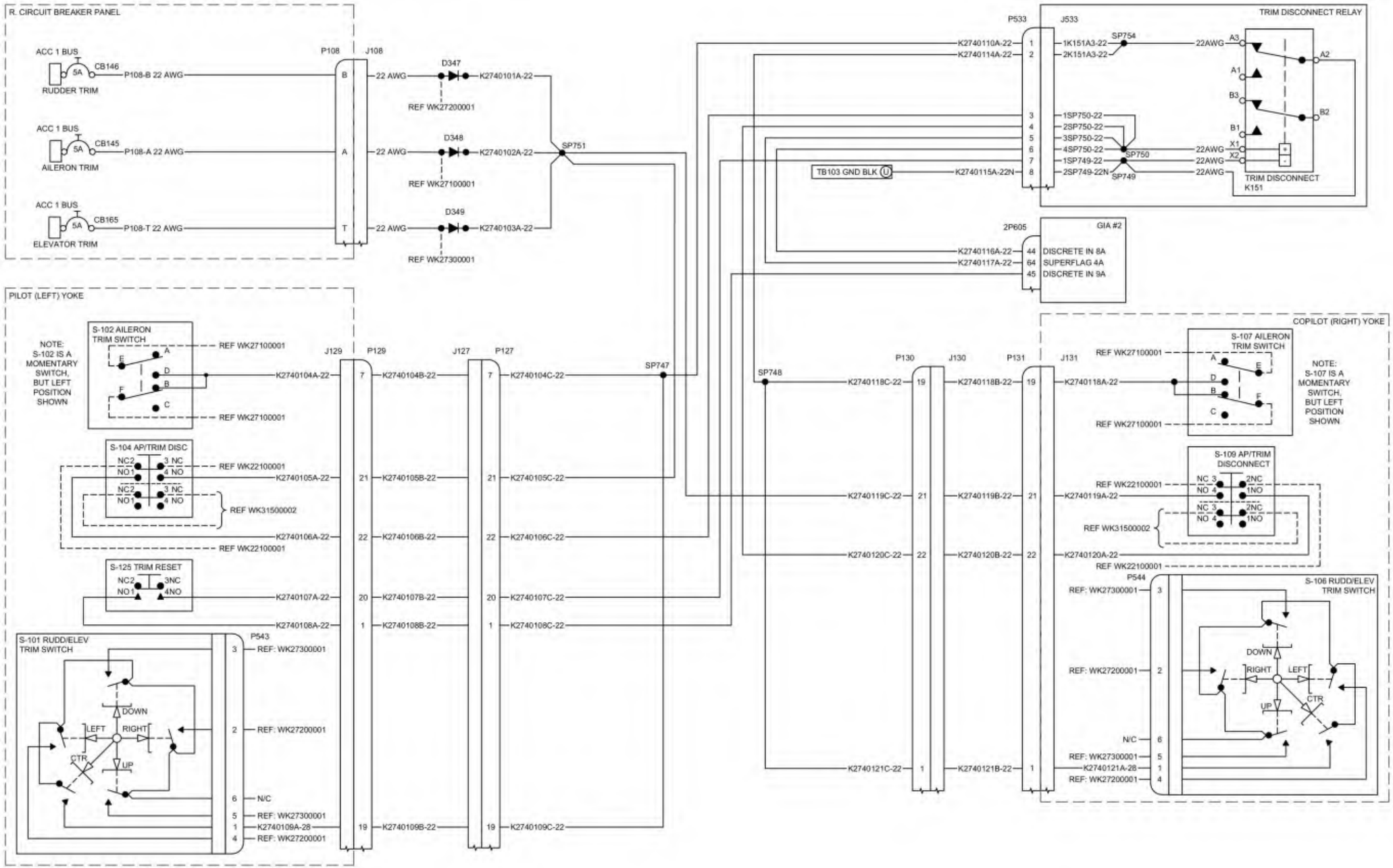

Figure 27-40.2: WK27401001A- (Sheet 1 of 2) Trim Disconnect (SN: K011-K012, and K003-K010 with SB-0017)

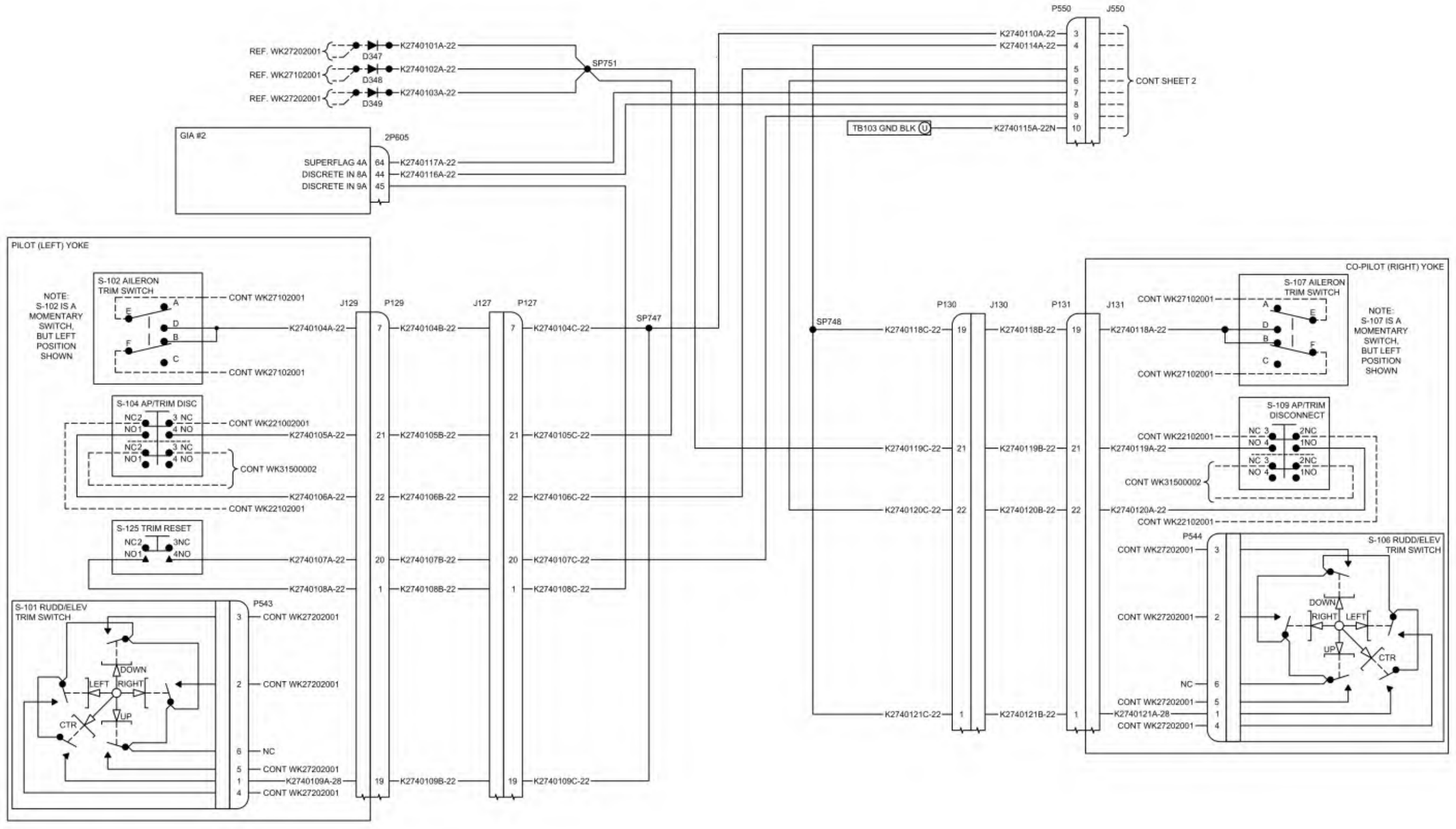

Figure 27-40.2: WK27401001A- (Sheet 2 of 2) Trim Disconnect (SN: K011-K012, and K003-K010 with SB-0017)

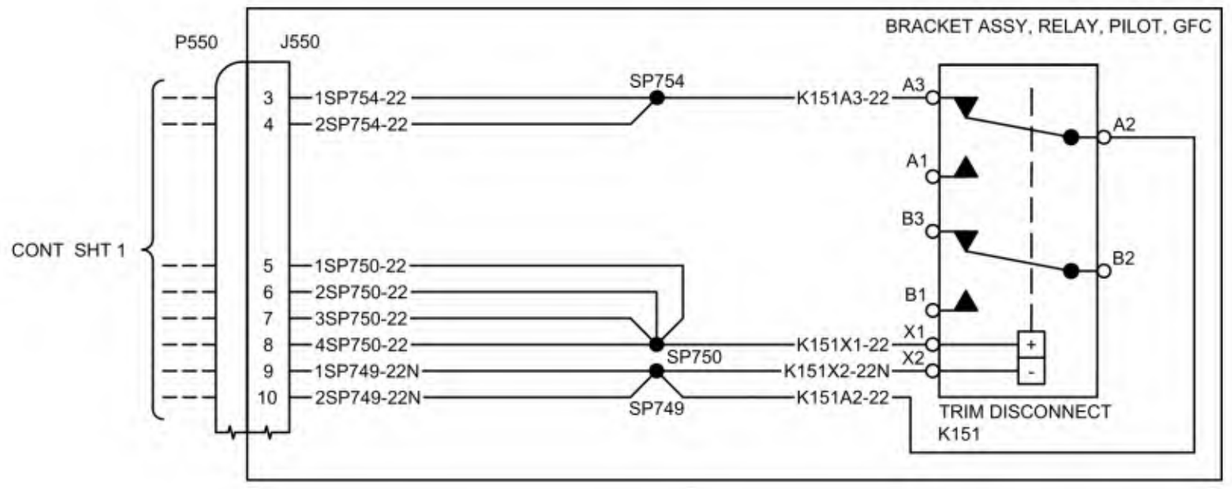

Figure 27-40.3: WK27402001-- (Sheet 1 of 2) Trim Disconnect (SN: K014 and On)

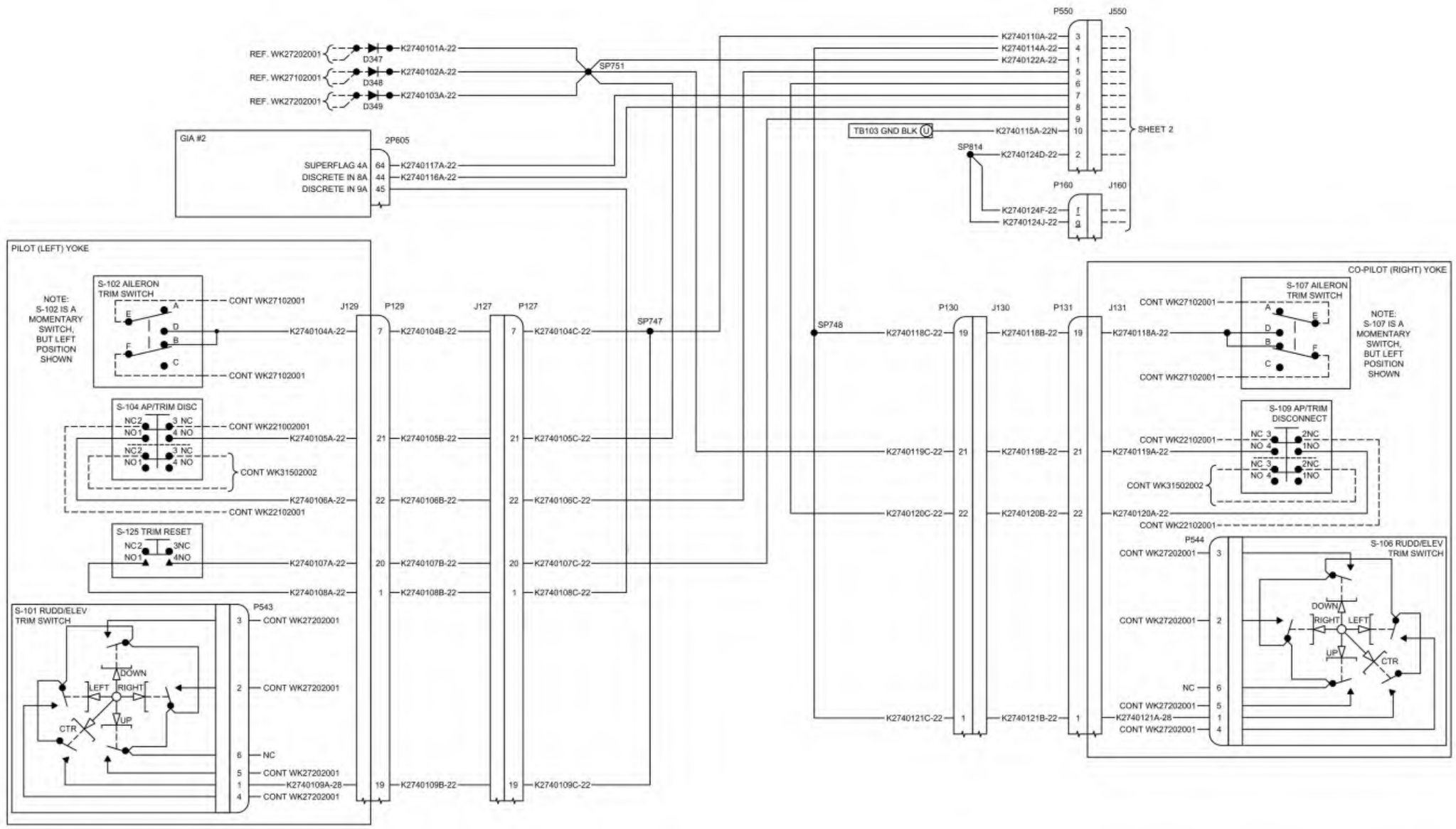

Figure 27-40.3: WK27402001-- (Sheet 2 of 2) Trim Disconnect (SN: K014 and On)

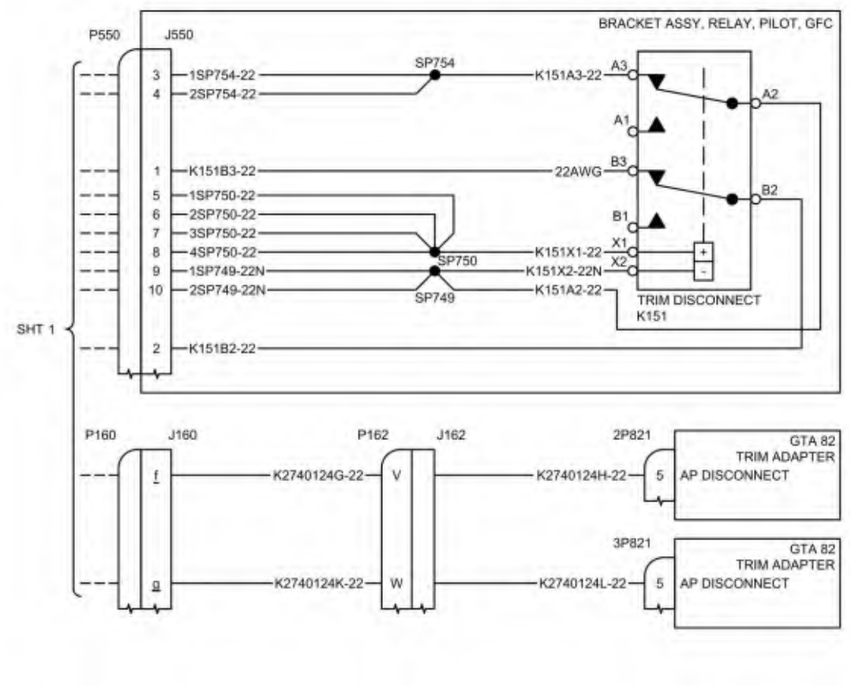

This Page Intentionally Left Blank

Figure 27-50.1: WK27500001-- Flap System (SN: K003-K010 without SB-0017, SB-0029, or SB-0034)

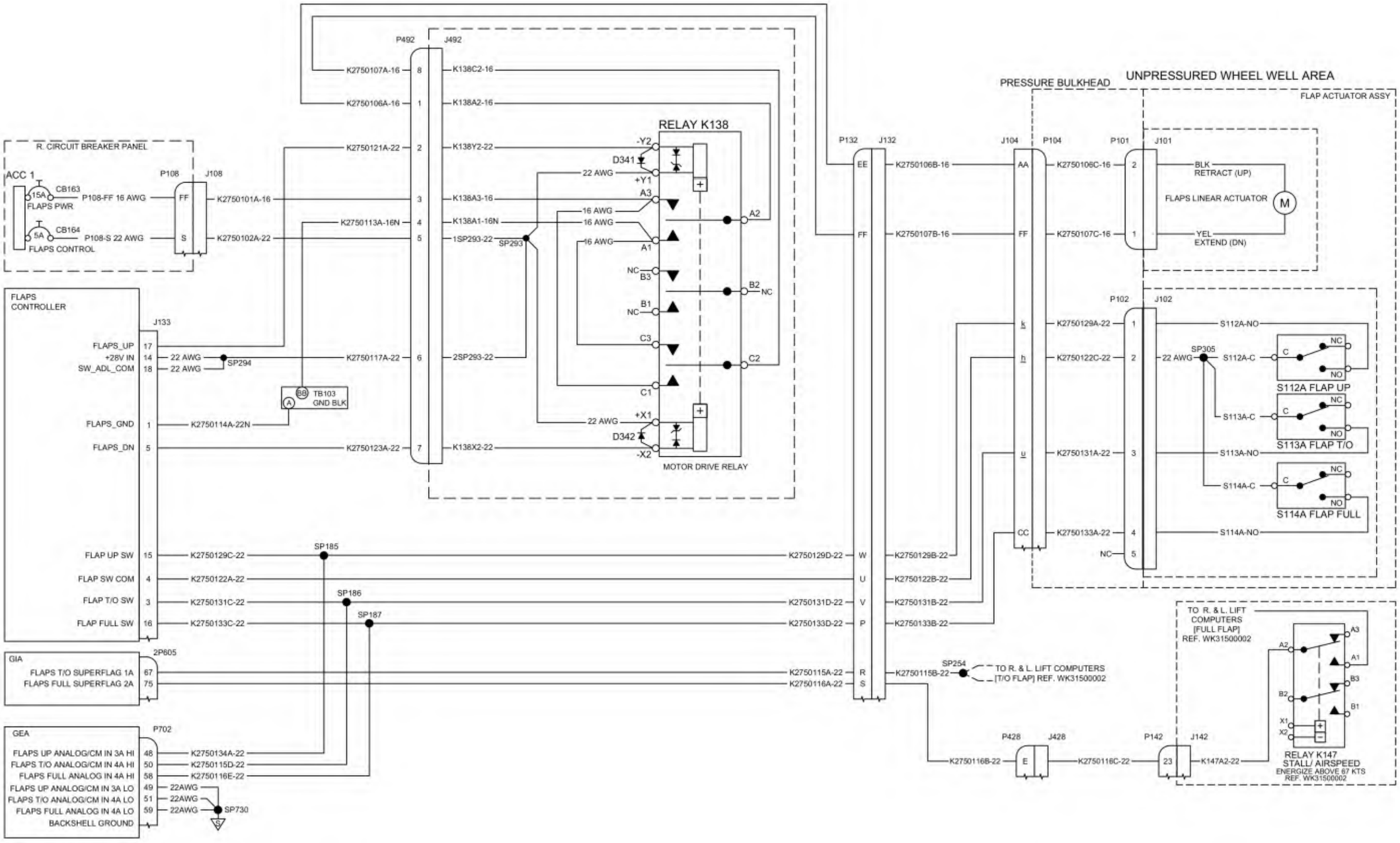

Figure 27-50.2: WK27500001A- Flap System (SN: K003-K010 without SB-0017 or SB-0029, and with SB-0034) (Sheet 1 of 2)

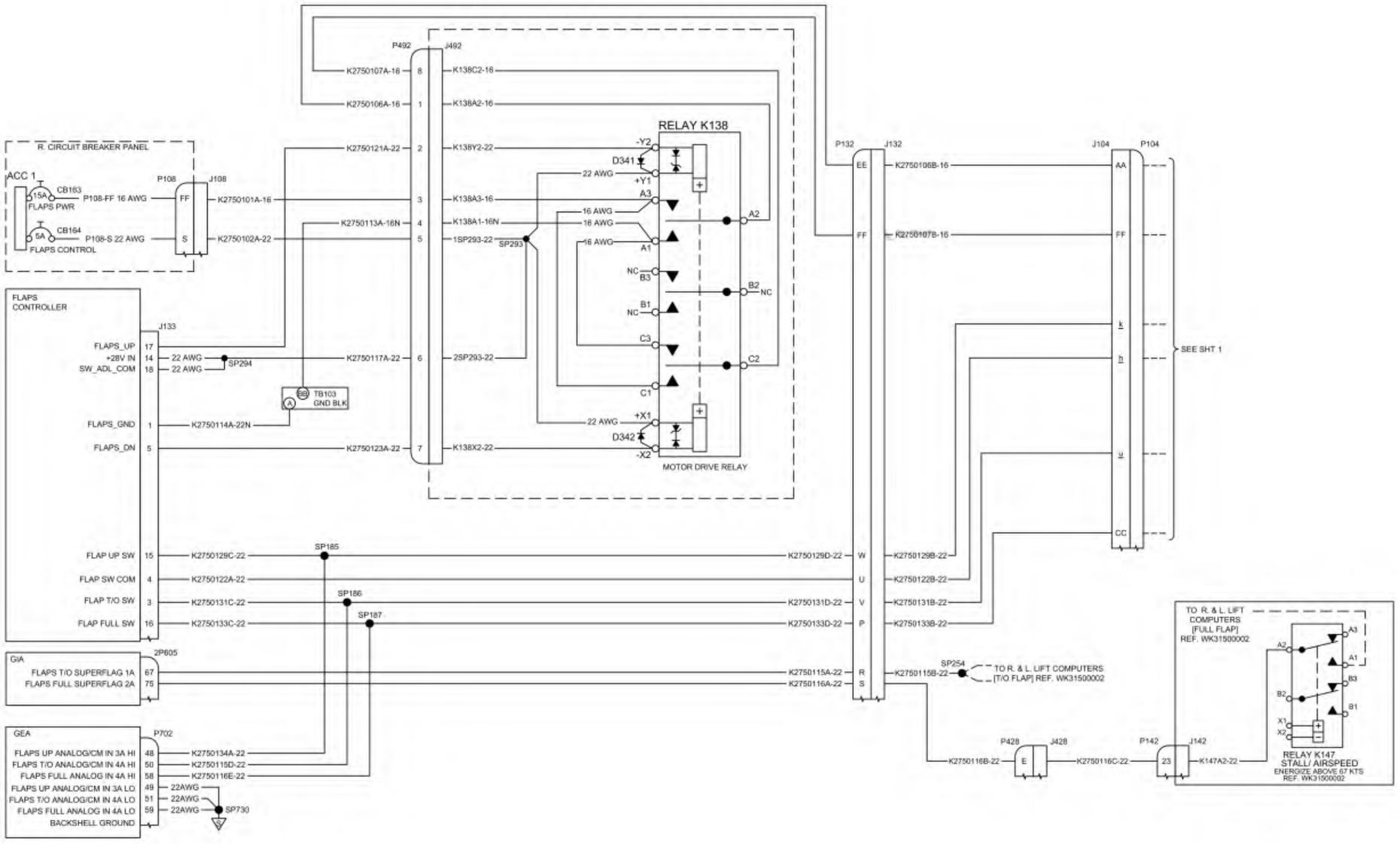

Figure 27-50.2: WK27500001A- Flap System (SN: K003-K010 without SB-0017 or SB-0029, and with SB-0034) (Sheet 2 of 2)

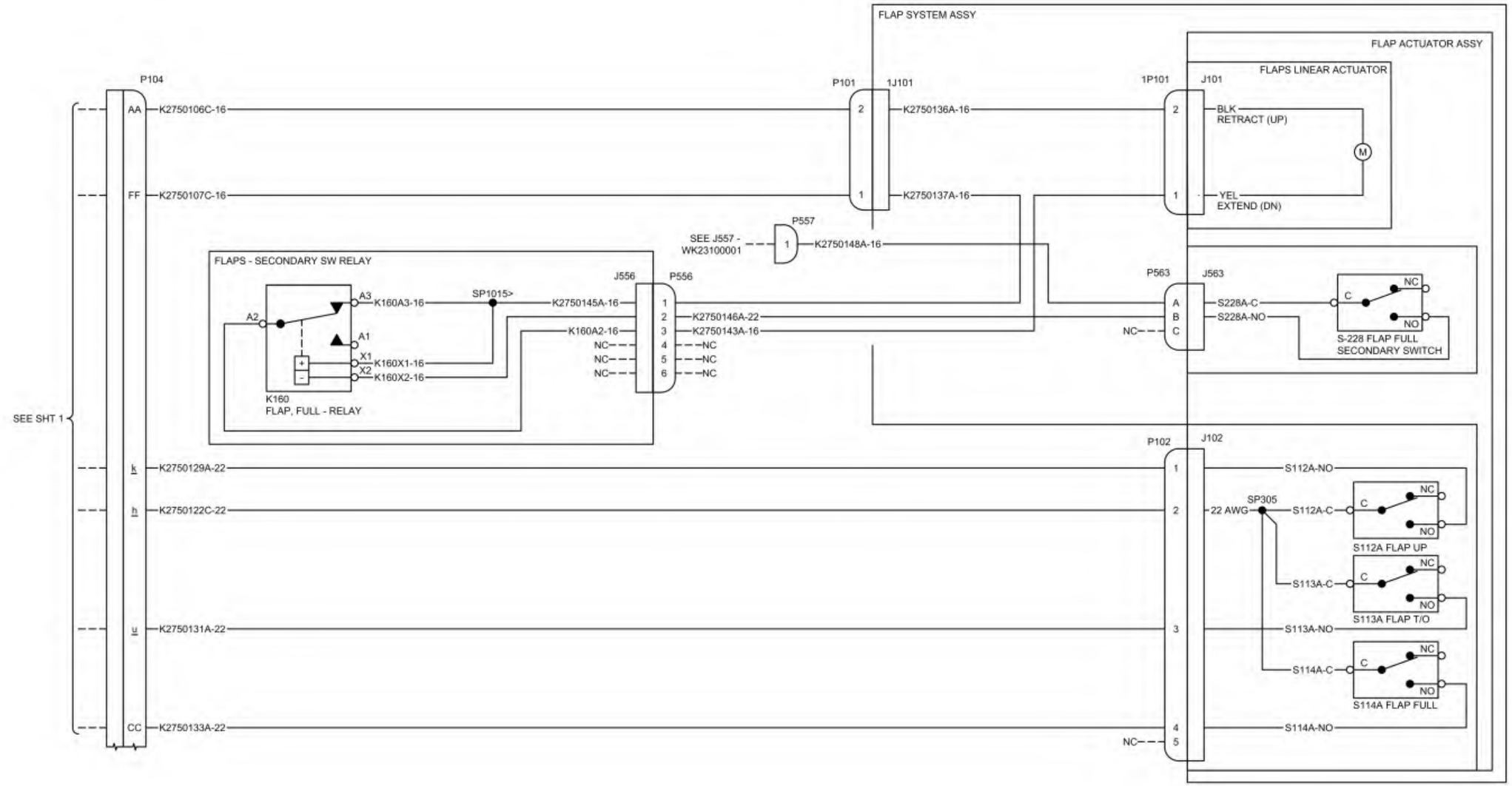

Figure 27-50.3: WK27502001-- Flap System (SN: K011and On, and K003-K010 with SB-0017 or SB-0029, and without SB-0034)

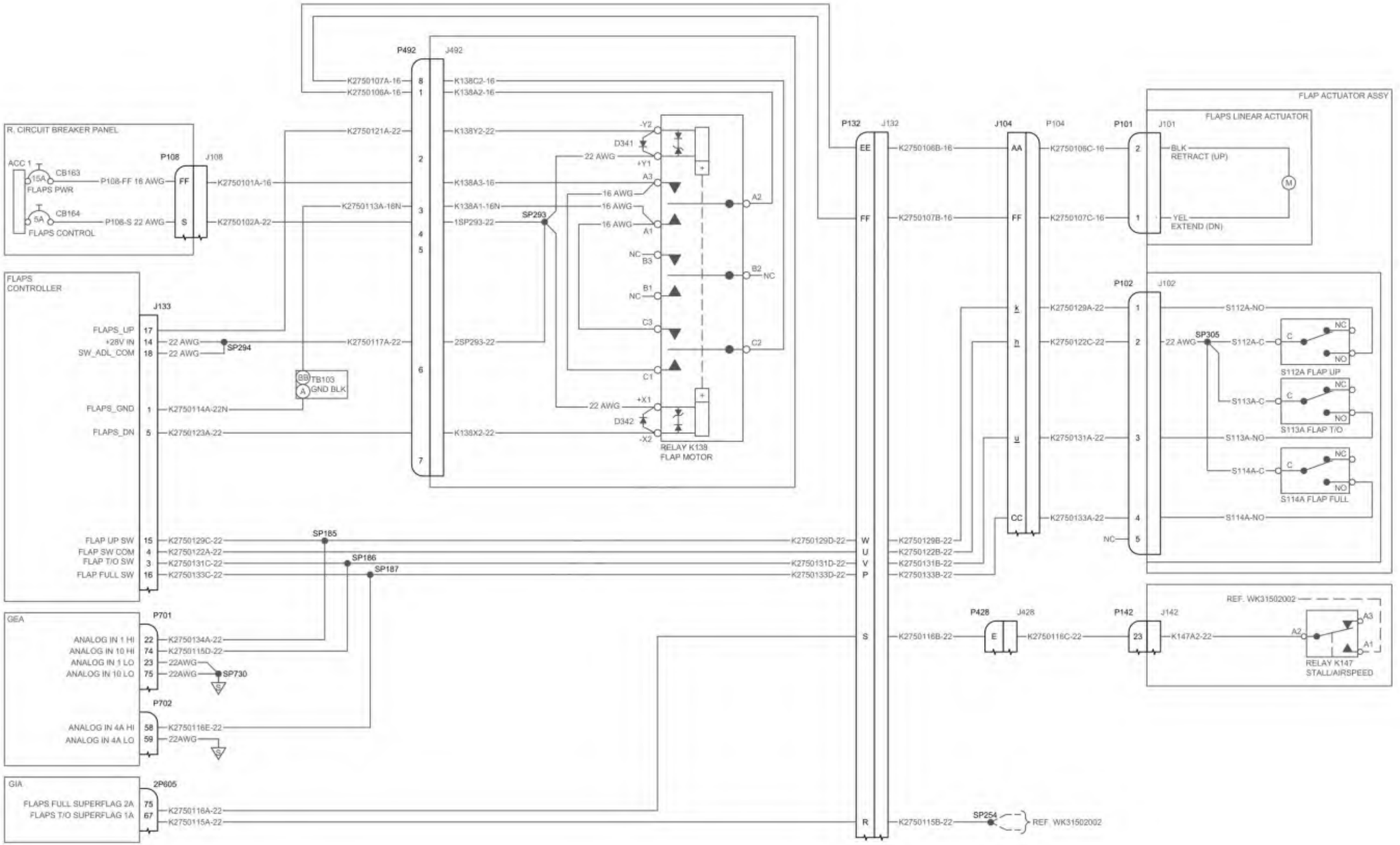

Figure 27-50.4: WK27502001A- Flap System (SN: K011 and On with SB-0034, and K003-K010 with SB-0017 or SB-0029, and SB-0034) (Sheet 1 of 2)

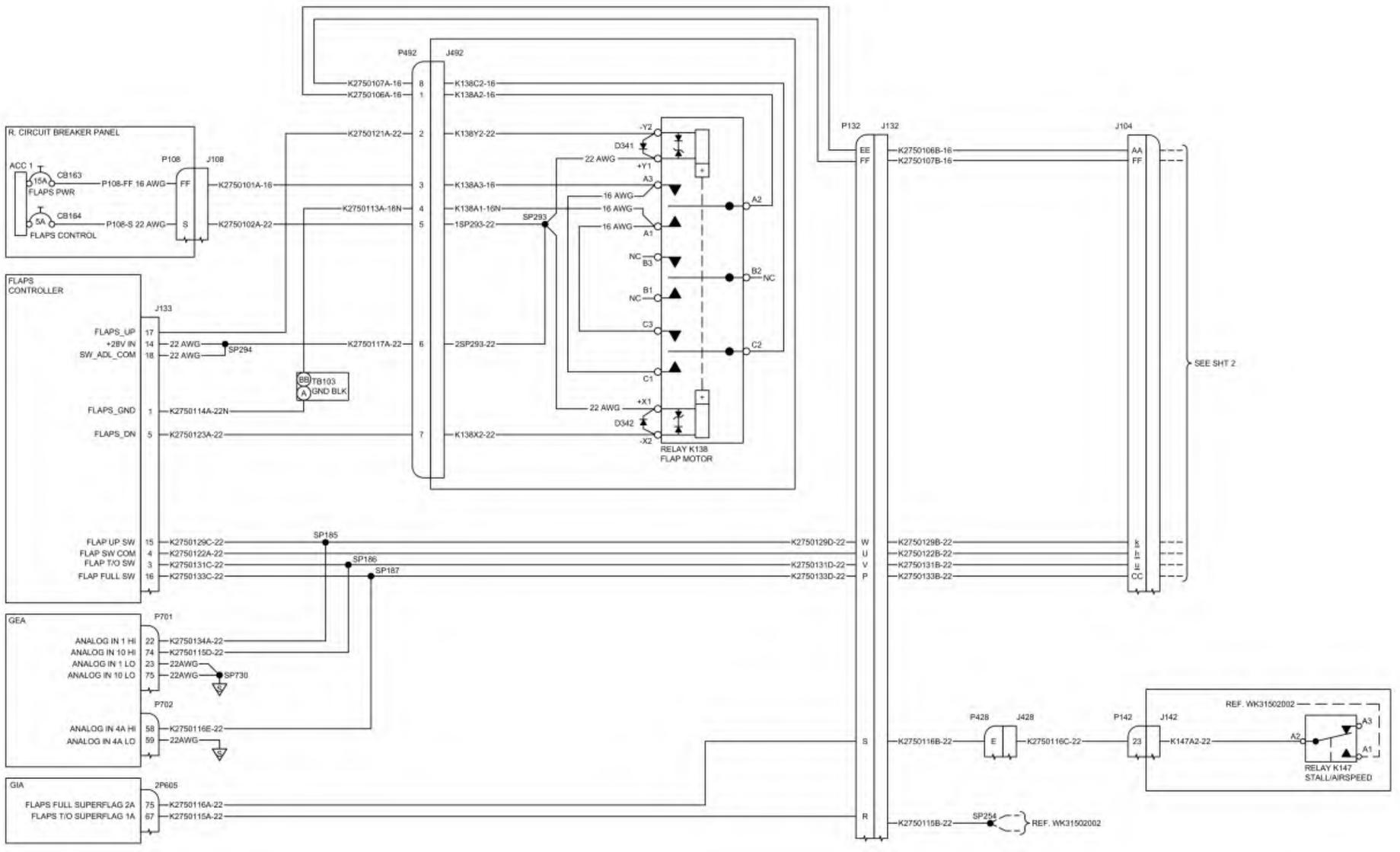

Figure 27-50.4: WK27502001A- Flap System (SN: K011 and On with SB-0034, and K003-K010 with SB-0017 or SB-0029, and SB-0034) (Sheet 2 of 2)

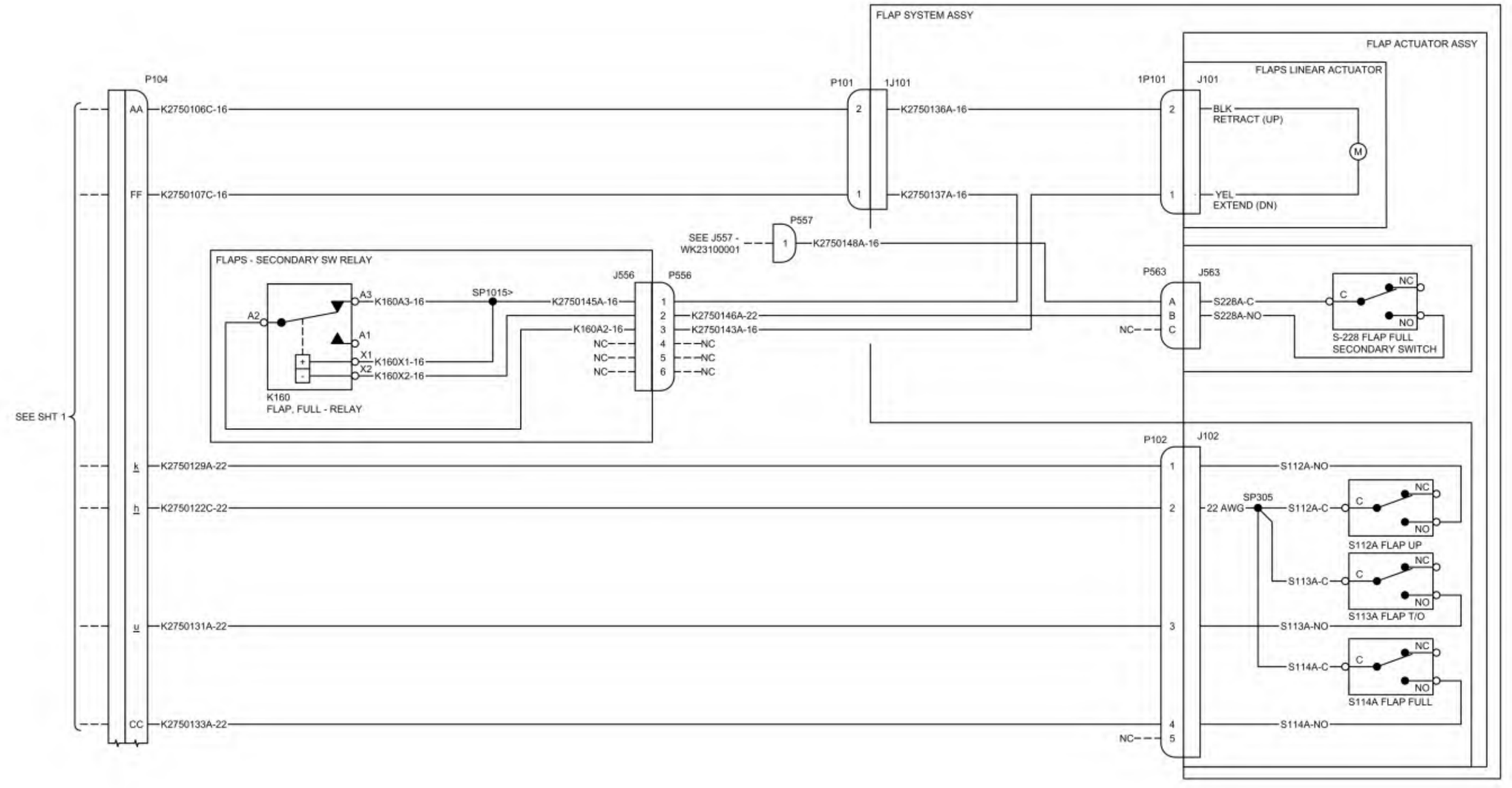

CHAPTER 28

Fuel

This Page Intentionally Left Blank

List of Effective Pages

Chapter/Section	Page Number	Effective Date
28-Title	Page 1	02 Jan 2020
28-Title	Page 2	02 Jan 2020
28-LOEP	Page 1	02 Jan 2020
28-LOEP	Page 2	02 Jan 2020
28-TOC	Page 1	02 Jan 2020
28-TOC	Page 2	02 Jan 2020
28-00	Page 1	02 Jan 2020
28-00	Page 2	02 Jan 2020
28-20	Page 1	02 Jan 2020
28-20	Page 2	02 Jan 2020
28-40	Page 1	02 Jan 2020
28-40	Page 2	02 Jan 2020

This Page Intentionally Left Blank

CHAPTER 28

Table of Contents

List of Effective Pages ..... 28-LOEP / Page 1
Table of Contents ..... 28-TOC / Page1

Paragraph **Page Number**

Fuel

1. General 28-00 / Page 1

Distribution

Figure 28-20.1: WK28200001-1 Electronic Fuel Pumps ..... 28-20 / Page 1
Figure 28-20.2: WK28200002-1 Fuel Auto Select ..... 28-20 / Page 2

Indicating

Figure 28-40.1: WK28400001-1 Fuel Quantity Probe ..... 28-40 / Page 1

This Page Intentionally Left Blank

FUEL

1. General

The fuel system for the aircraft is wet wing fuel tanks, two electric boost pumps, an engine driven fuel pump, fuel sumps, a fuel selector, a shutoff valve, a fuel filter, hoses, lines, fittings, and an oil-to fuel heater.

Six bays in each wing give approximately 139 US gallons (526 liters) of fuel capacity for a total of 278 US gallons (1052 liters). The inboard fuel bay acts as a header tank with flapper valves. An electric boost pump in each wing provides fuel through a fuel selector that directs fuel from either the left or right wing. The fuel selector has internal logic that automatically switches the fuel delivery from the left and right wings every 2 minutes to balance the system. A fuel tank vent in each wing provides differential atmospheric stability. Capacitance probes in each wing provide fuel quantity information.

Note: Refer to the current revision of the Pratt and Whitney Engine Maintenance Manual for fuel system maintenance procedures for the engine.

This Page Intentionally Left Blank

Figure 28-20.1: WK28200001-1 Electronic Fuel Pumps

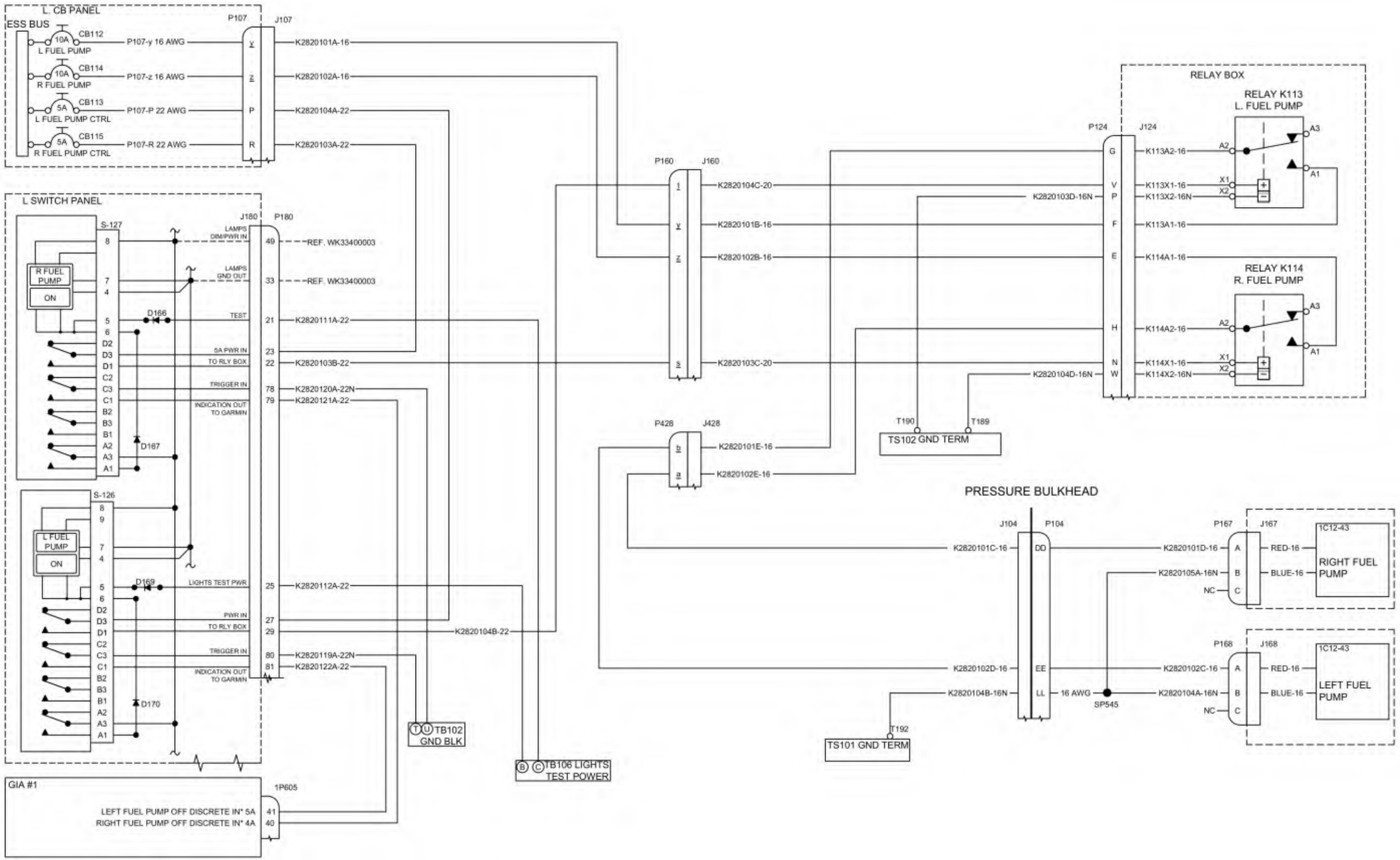

Figure 28-20.2: WK28200002-1 Fuel Auto Select

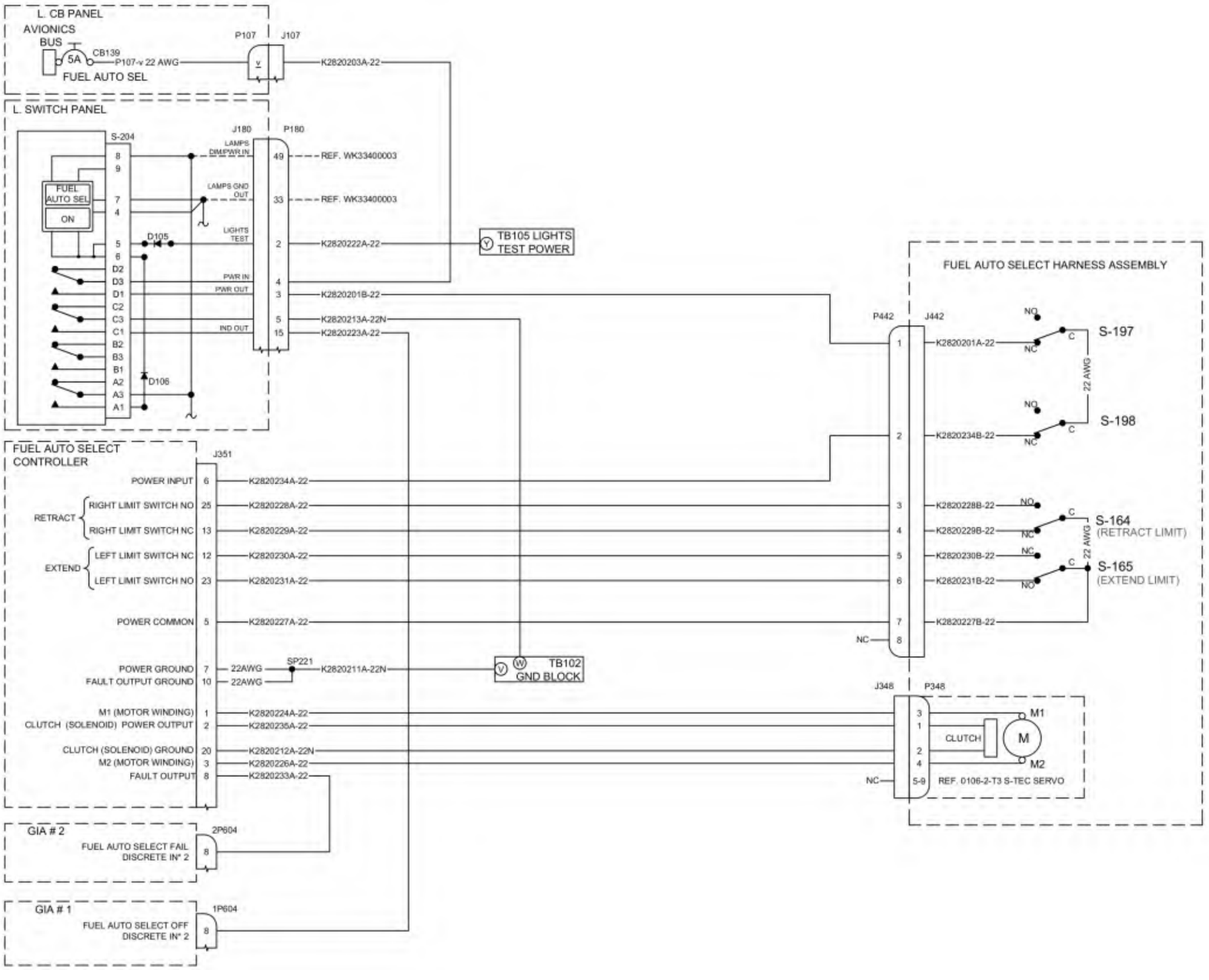

Figure 28-40.1: WK28400001-1 Fuel Quantity Probe

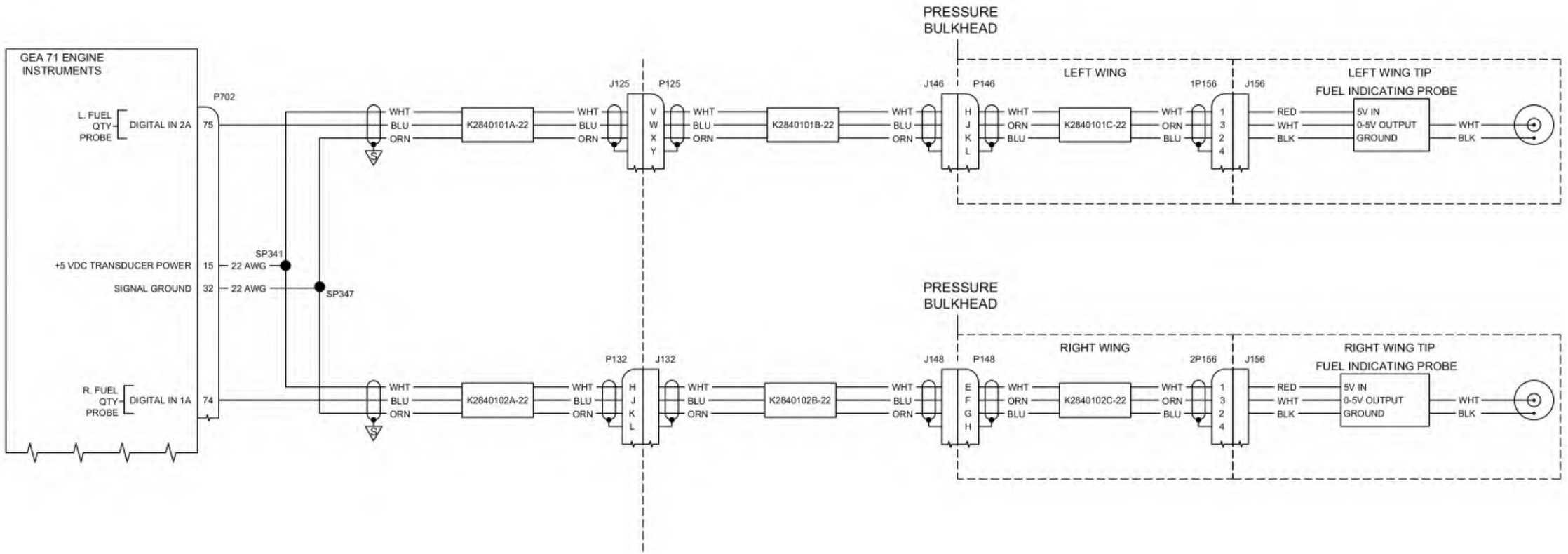

This Page Intentionally Left Blank

CHAPTER 30

Ice and Rain Protection

This Page Intentionally Left Blank

List of Effective Pages

Chapter/Section	Page Number	Effective Date
30-Title	Page 1	02 Jan 2020
30-Title	Page 2	02 Jan 2020
30-LOEP	Page 1	14 July 2025
30-LOEP	Page 2	02 Jan 2020
30-TOC	Page 1	17 Aug 2022
30-TOC	Page 2	02 Jan 2020
30-00	Page 1	02 Jan 2020
30-00	Page 2	02 Jan 2020
30-10	Page 1	14 Jul 2021
30-10	Page 2	14 Jul 2021
30-10	Page 3	14 Jul 2021
30-10	Page 4	14 Jul 2021
30-30	Page 1	14 July 2025
30-30	Page 2	14 July 2025
30-30	Page 3	14 July 2025
30-30	Page 4	14 July 2025
30-30	Page 5	14 July 2025
30-30	Page 6	14 July 2025
30-30	Page 7	14 July 2025
30-30	Page 8	14 July 2025
30-30	Page 9	14 July 2025
30-30	Page 10	14 July 2025
30-30	Page 11	14 July 2025
30-30	Page 12	14 July 2025
30-60	Page 1	02 Jan 2020
30-60	Page 2	02 Jan 2020
30-70	Page 1	14 Jul 2021
30-70	Page 2	14 Jul 2021
30-70	Page 3	14 July 2025
30-70	Page 4	14 Jul 2021
30-80	Page 1	14 July 2025
30-80	Page 2	14 Jul 2021

This Page Intentionally Left Blank

CHAPTER 30

Table of Contents

List of Effective Pages ..... 30-LOEP / Page 1
Table of Contents ..... 30-TOC / Page1

Paragraph **Page Number**

Ice and Rain Protection

1. General 30-00 / Page 1

Airfoil

Figure 30-10.1: WK30100001-- Pneumatic De-Ice System (SN: K003-K010) ..... 30-10 / Page 1
Figure 30-10.2: WK30101001-- Pneumatic De-Ice System (SN: K011-K012 and K003-K010 with SB-0017) ..... 30-10 / Page 2
Figure 30-10.3: WK30102001-- Pneumatic De-Ice System (SN: K014 and On) ..... 30-10 / Page 3

Pitot and Static

Figure 30-30.1: WK30300002-2 (Sheet 1 of 3) Pitot Stall Heat (SN: K004-K010 without SB-0017 or SB-0029) ..... 30-30 / Page 1
Figure 30-30.2: WK30301002A- (Sheet 1 of 4) Pitot Stall Heat (SN: K011-K012 and K003-K010 with SB-0017 or K003-K010 with SB-0029) ..... 30-30 / Page 4
Figure 30-30.2: WK30301002A- (Sheet 4 of 4) Pitot Stall Heat (K011-K012 and K003-K010 with SB-0017 or K003-K010 with SB-0029) ..... 30-30 / Page 7

Propeller

Figure 30-60.1: WK30600001-1 Propeller Heat Control 30-60 / Page 1

Windshield De-Ice

Figure 30-70.1: WK30700001-- Windshield De-Ice (SN: K003-K010) 30-70 / Page 1
Figure 30-70.2: WK30701001-- Windshield De-Ice (SN: K011-K012 and K003-K010 with SB-0017) 30-70 / Page 2
Figure 30-70.3: WK30702001A- Windshield De-Ice (SN: K014 and On) 30-70 / Page 3

Ice Detector

Figure 30-80.1: WK30800001A- Ice Detector 30-80 / Page 1

This Page Intentionally Left Blank

ICE AND RAIN PROTECTION

1. General

This aircraft has de-ice systems for the pitot probes, lift detectors, engine inlet, propeller, wings, horizontal stabilizer, and windscreen. All of these systems are manually operated by the pilot or copilot when required.

The pitot probes and lift detectors are electrically heated to prevent ice formation from producing inaccurate performance.

The engine inlet is protected by an inertial separator that helps prevent ice from forming on the inlet screen during flight.

The propeller de-ice system is supplied by Hartzell Propeller, Inc., and uses electrical heating elements encased in blade mounted boots. A timer controls the flow of electricity to the boots which alternately heats then lets them cool. This melts the ice layer after it has formed on the blades letting the ice be thrown off by centrifugal force. The system is a timer and sequencer, electrical slip rings, brush block assembly, and blade mounted boots.

The de-ice system for the wings and horizontal stabilizer is manufactured by B/E Aerospace, Inc., and is created using inflatable channels encased in a fabric and elastomer material (de-icers) that are bonded to the leading edges. Compressed air from the aircraft engine is used to inflate the de-icers. Inflation and deflation of the de-icers breaks the interface between the accumulated ice and the wing leading edge. Airflow then carries away the ice.

This Page Intentionally Left Blank

Figure 30-10.1: WK30100001-- Pneumatic De-Ice System (SN: K003-K010)

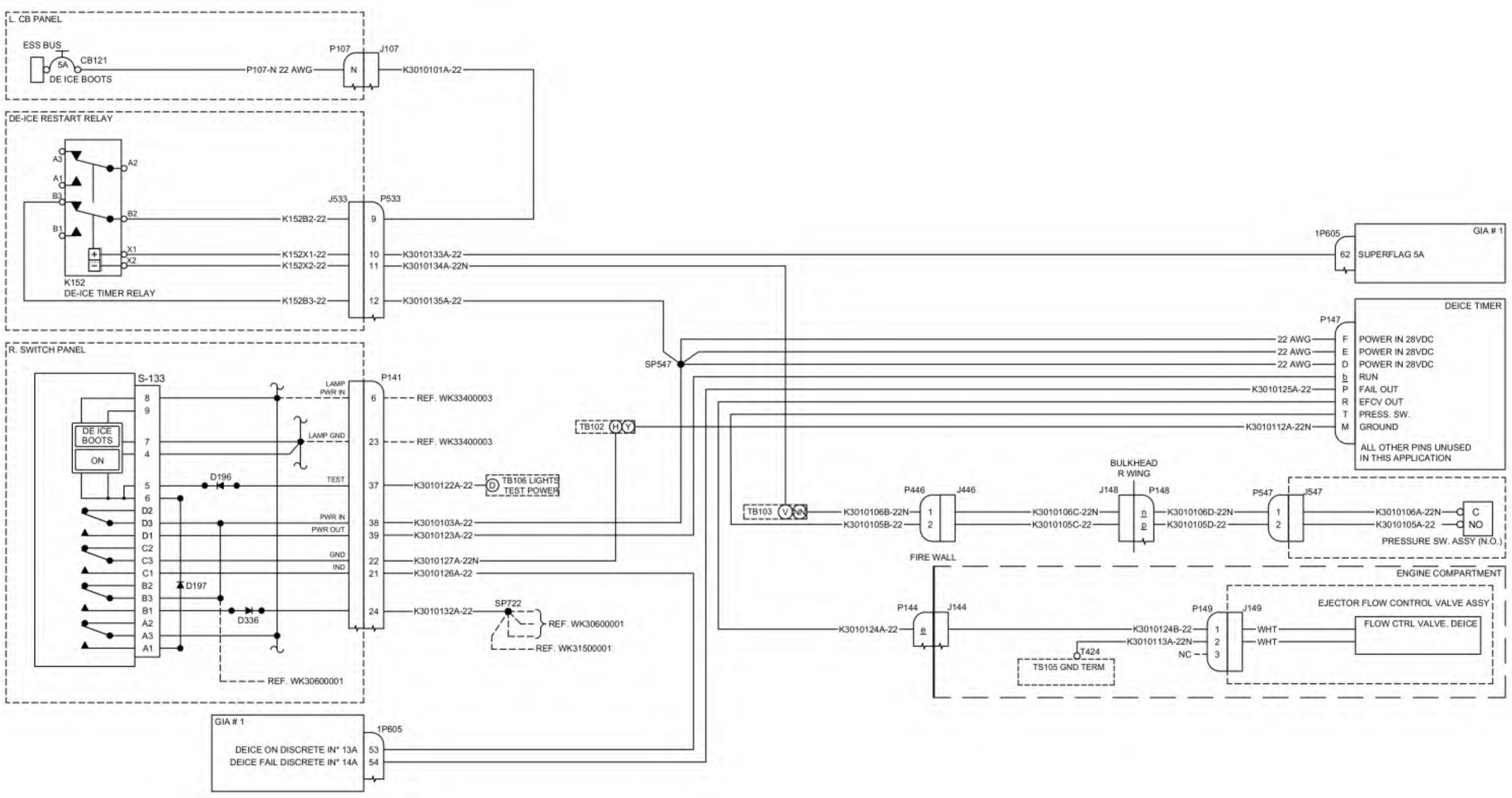

Figure 30-10.2: WK30101001-- Pneumatic De-Ice System (SN: K011-K012 and K003-K010 with SB-0017)

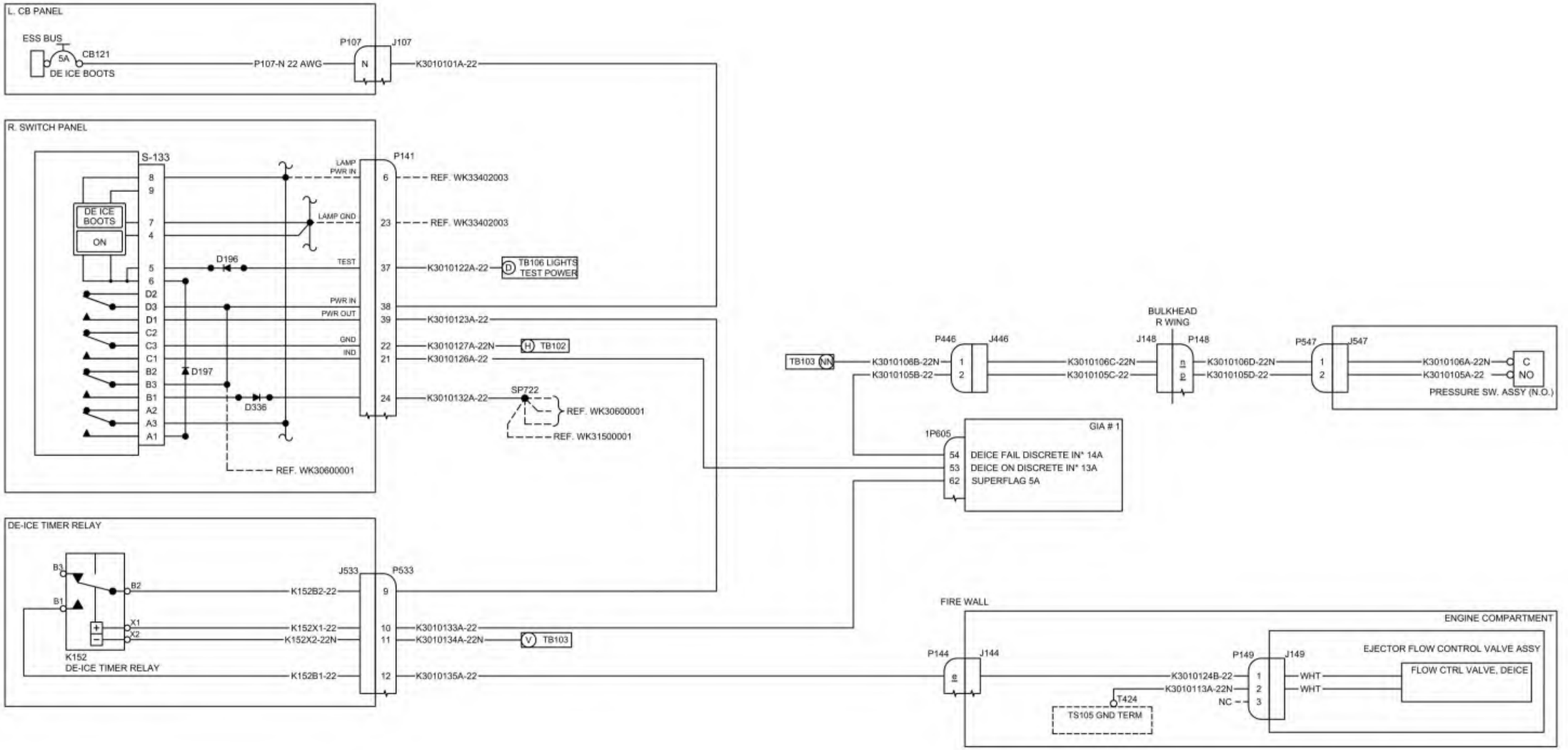

Figure 30-10.3: WK30102001-- Pneumatic De-Ice System (SN: K014 and On)

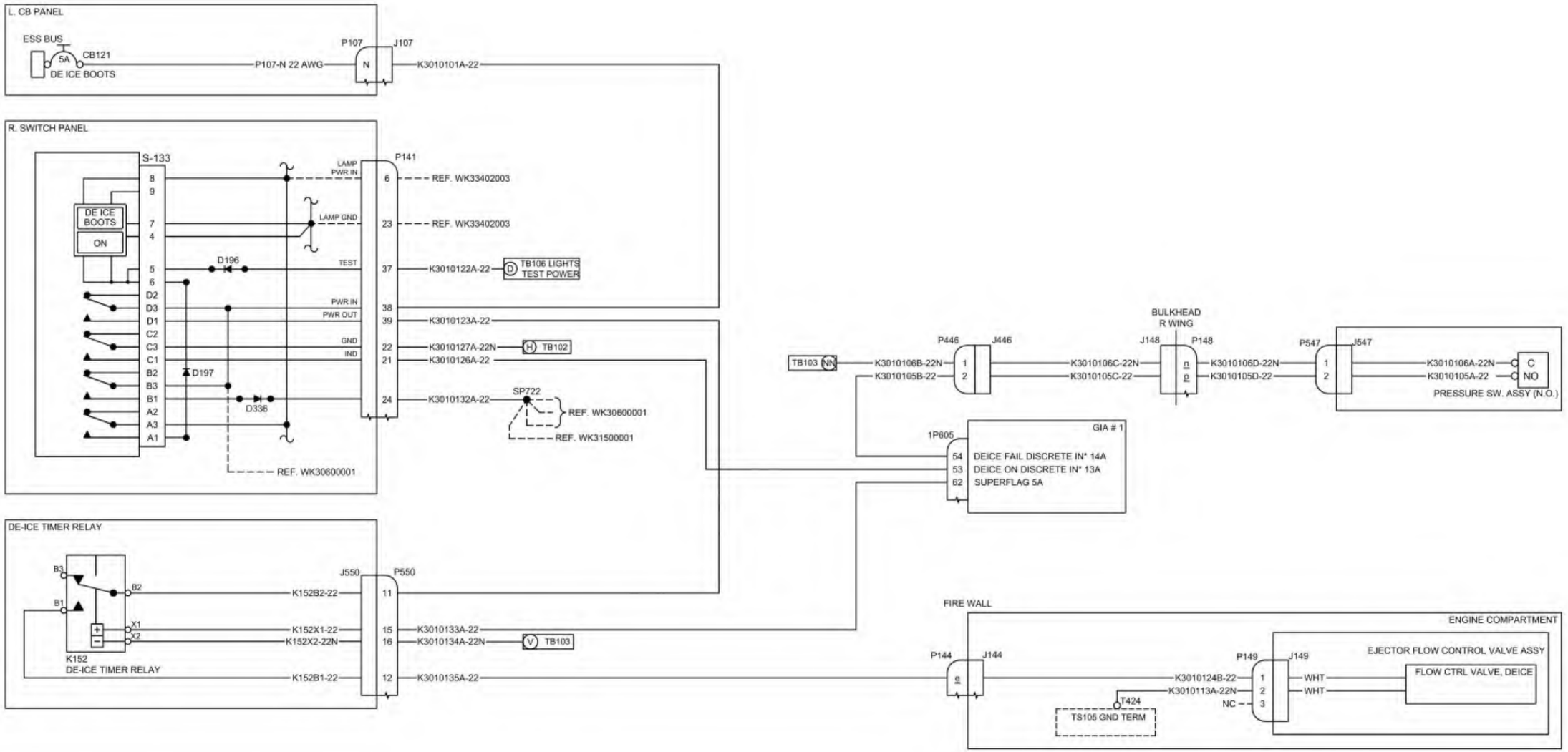

This Page Intentionally Left Blank

Figure 30-30.1: WK30300002-2 (Sheet 1 of 3) Pitot Stall Heat (SN: K004-K010 without SB-0017 or SB-0029)

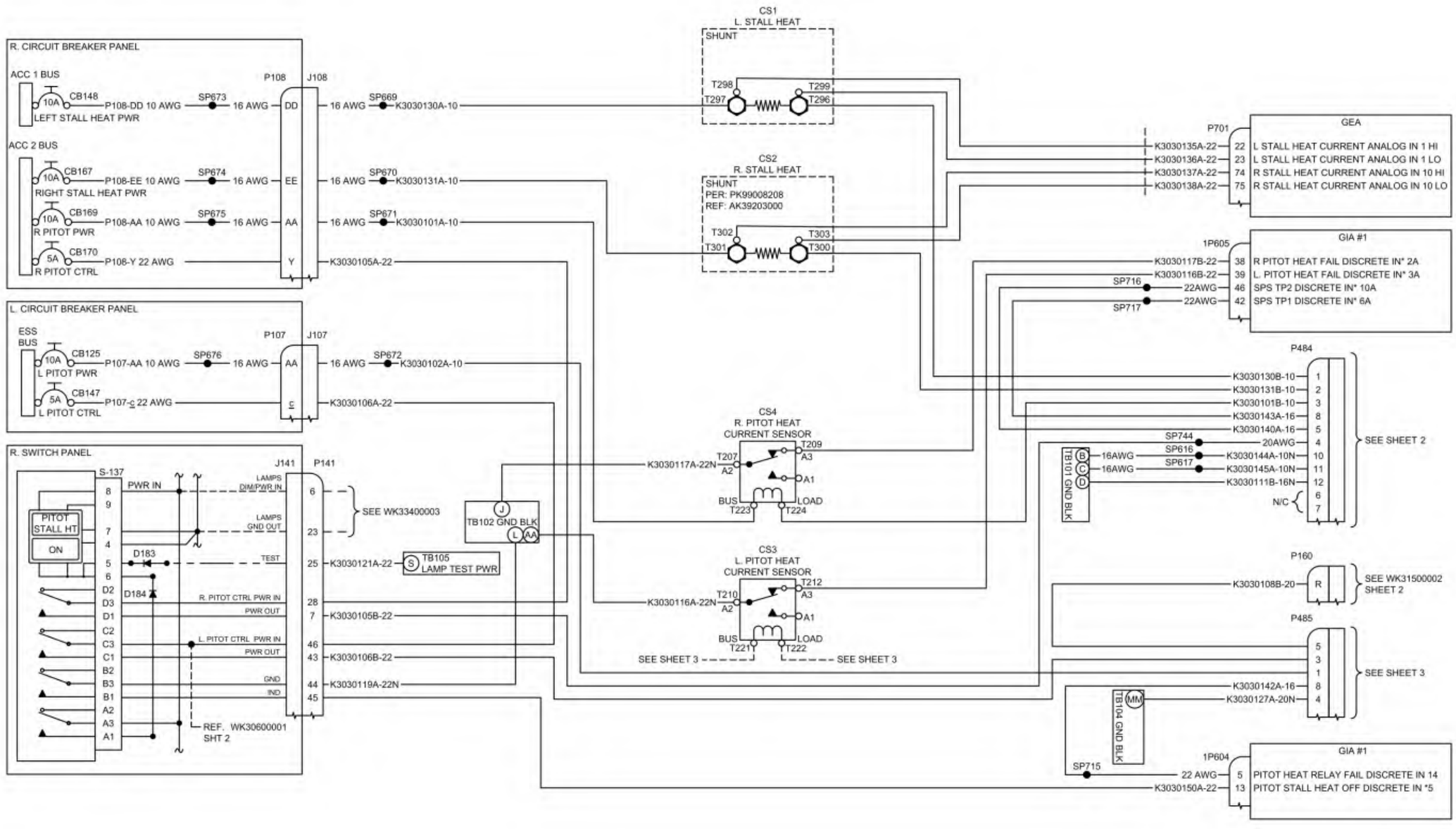

Figure 30-30.1: WK30300002-2 (Sheet 2 of 3) Pitot Stall Heat (SN: K004-K010 without SB-0017 or SB-0029)

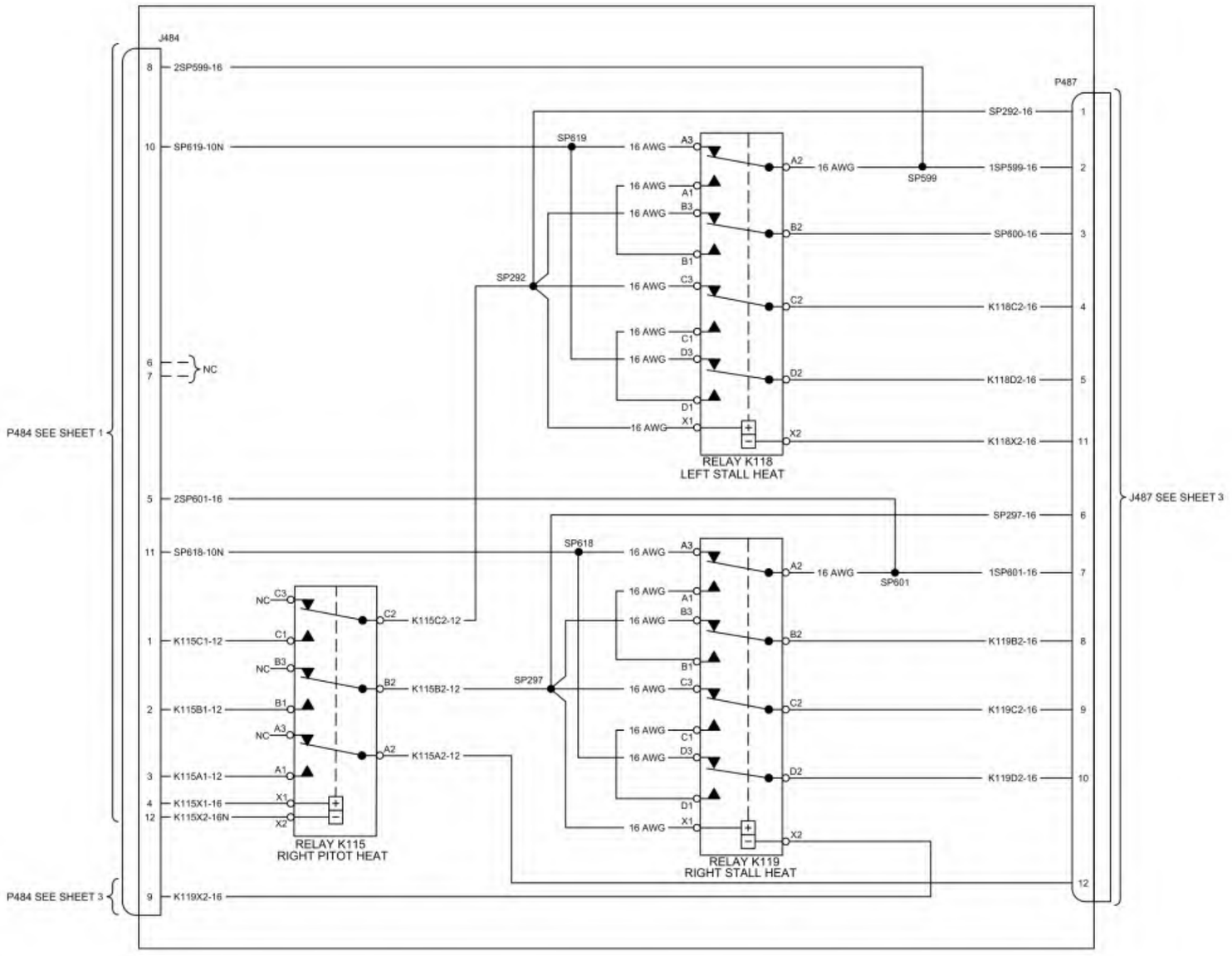

Figure 30-30.1: WK30300002-2 (Sheet 3 of 3) Pitot Stall Heat (SN: K004-K010 without SB-0017 or SB-0029)

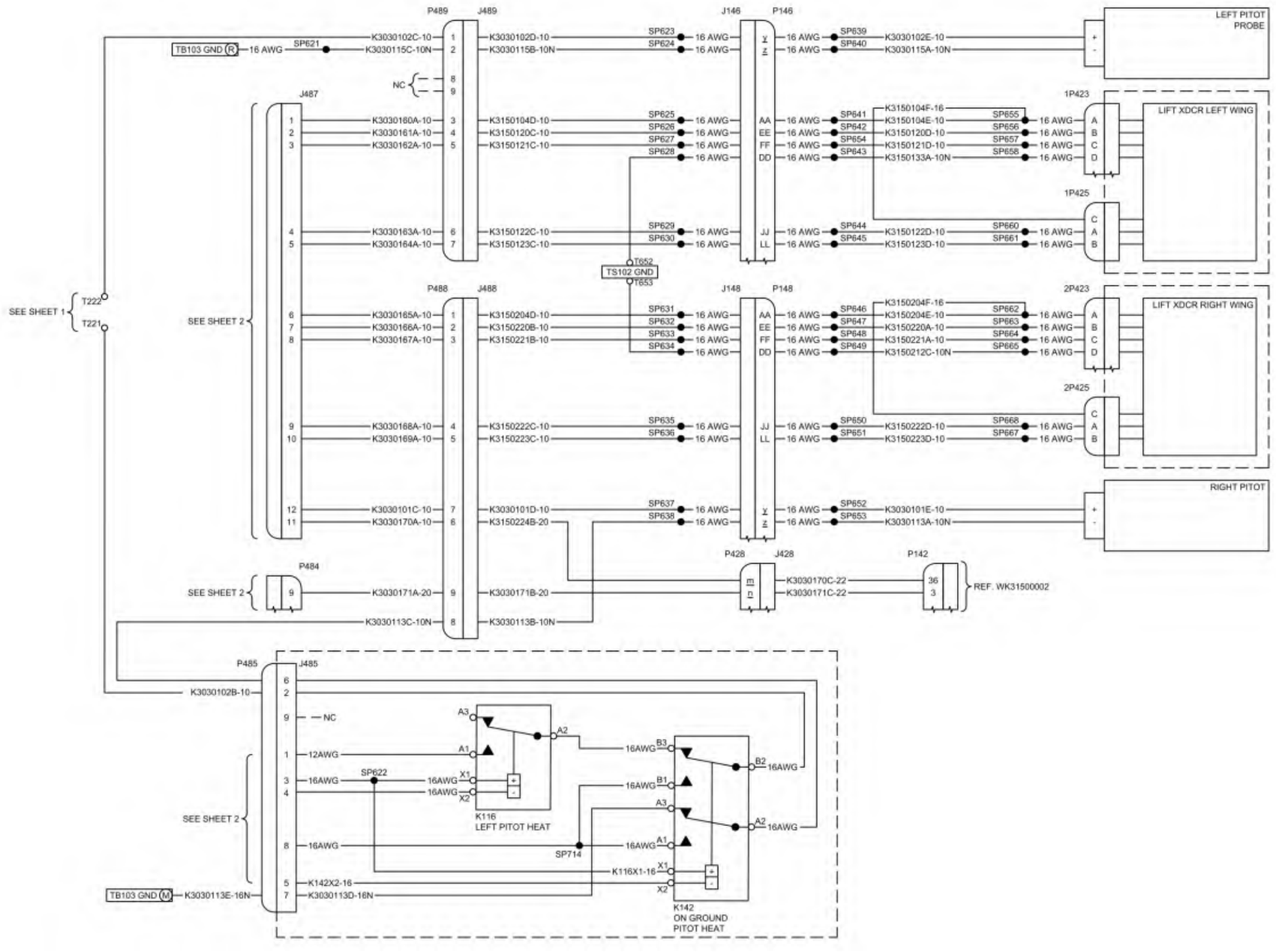

Figure 30-30.2: WK30301002A- (Sheet 1 of 4) Pitot Stall Heat (SN: K011-K012 and K003-K010 with SB-0017 or K003-K010 with SB-0029)

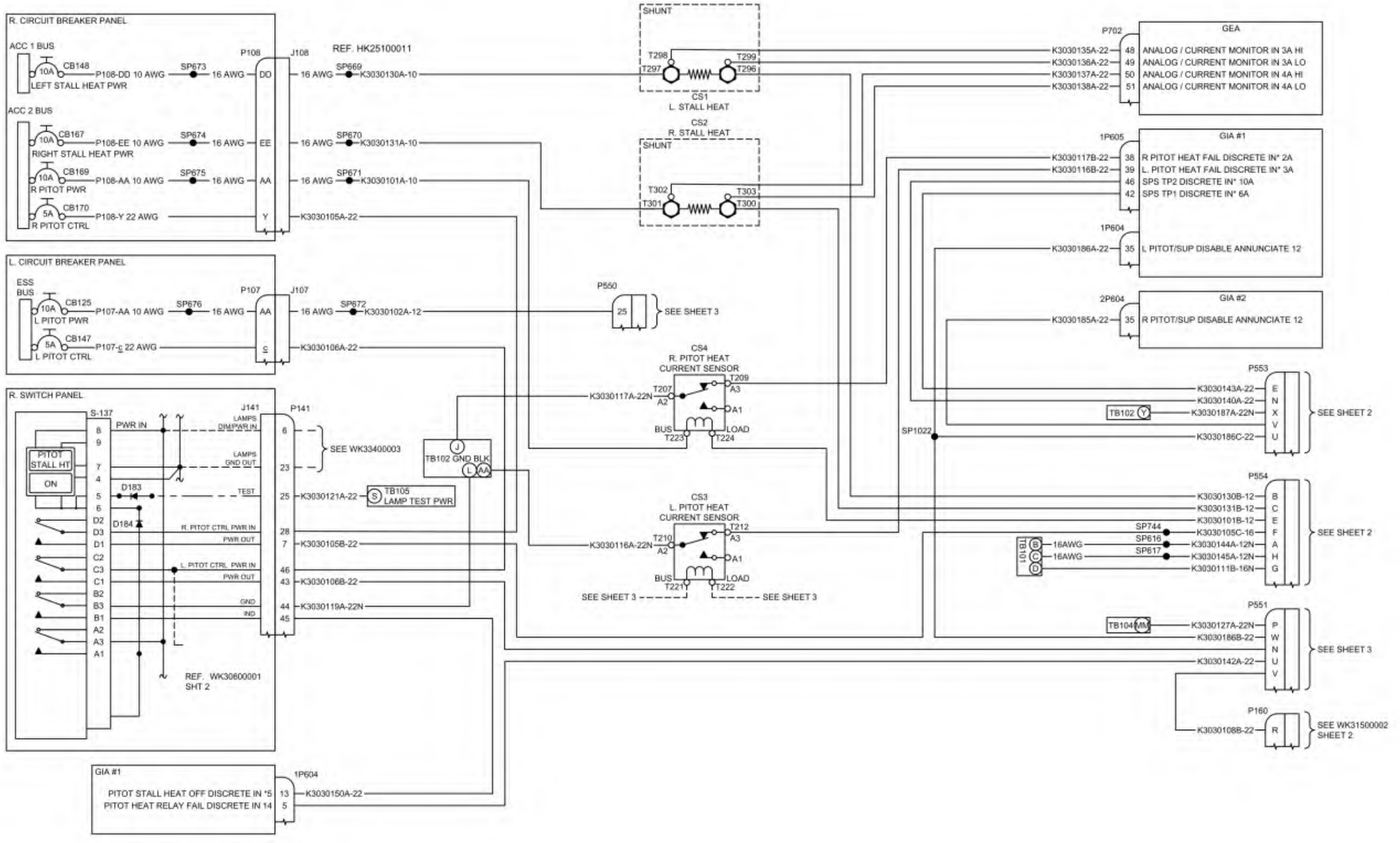

Figure 30-30.2: WK30301002A- (Sheet 2 of 4) Pitot Stall Heat (K011-K012 and K003-K010 with SB-0017 or K003-K010 with SB-0029)

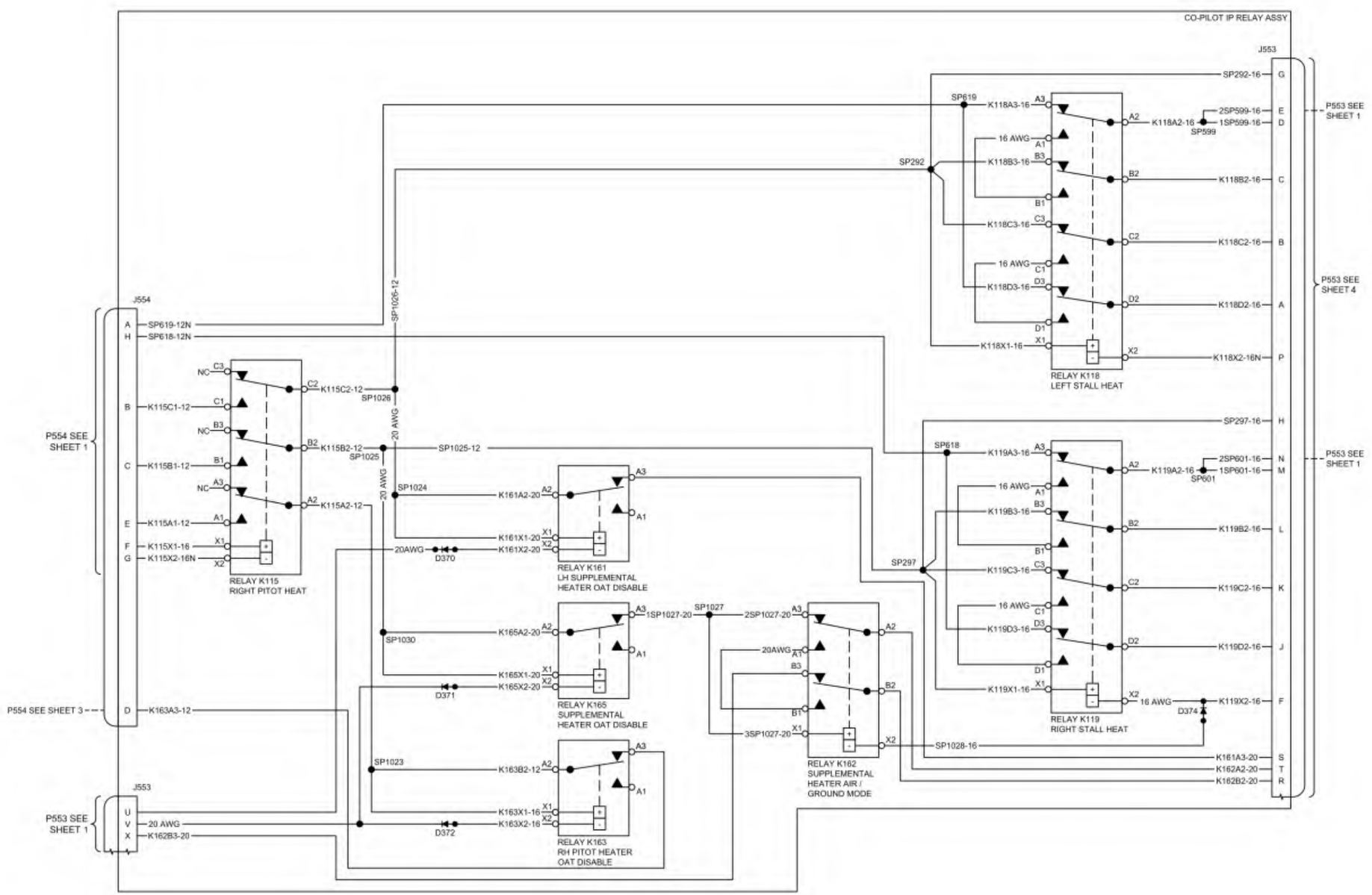

Figure 30-30.2: WK30301002A- (Sheet 3 of 4) Pitot Stall Heat (K011-K012 and K003-K010 with SB-0017 or K003-K010 with SB-0029)

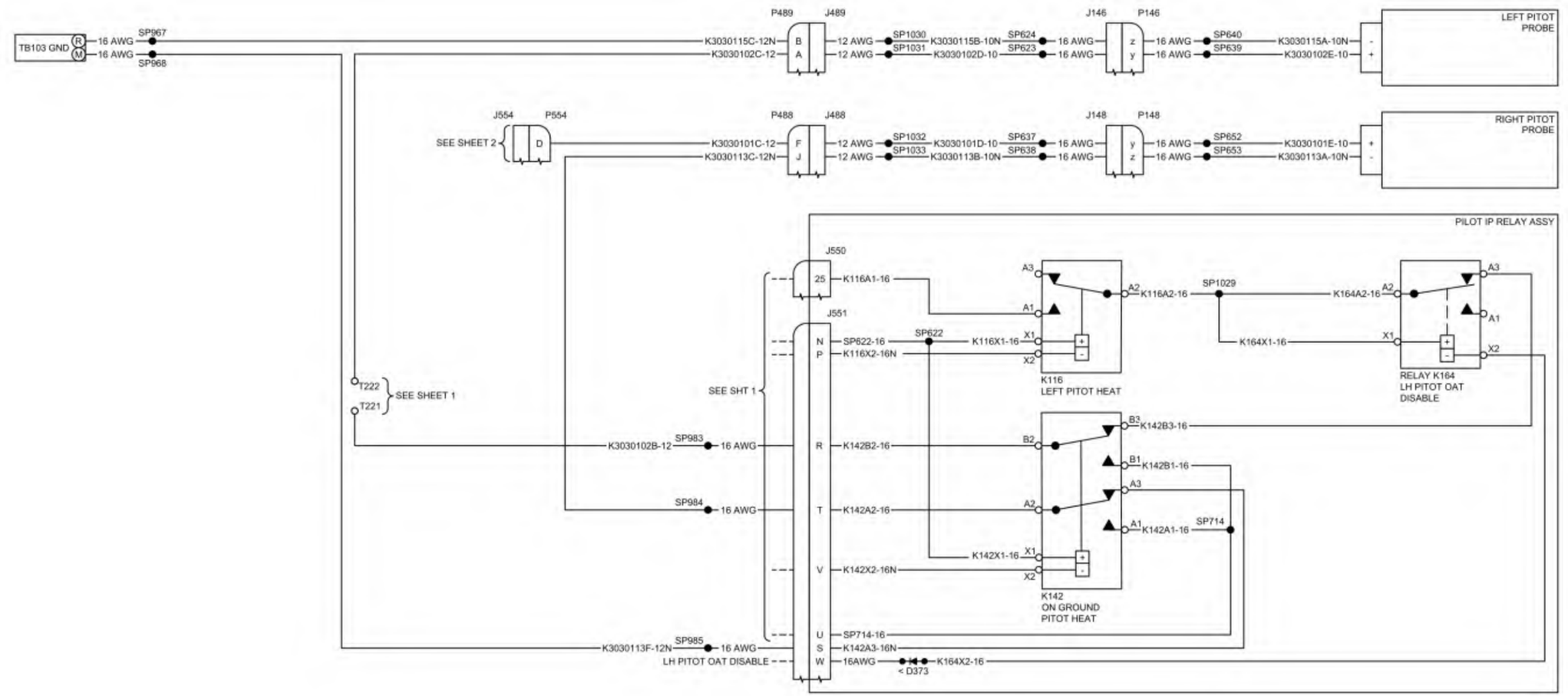

Figure 30-30.2: WK30301002A- (Sheet 4 of 4) Pitot Stall Heat (K011-K012 and K003-K010 with SB-0017 or K003-K010 with SB-0029)

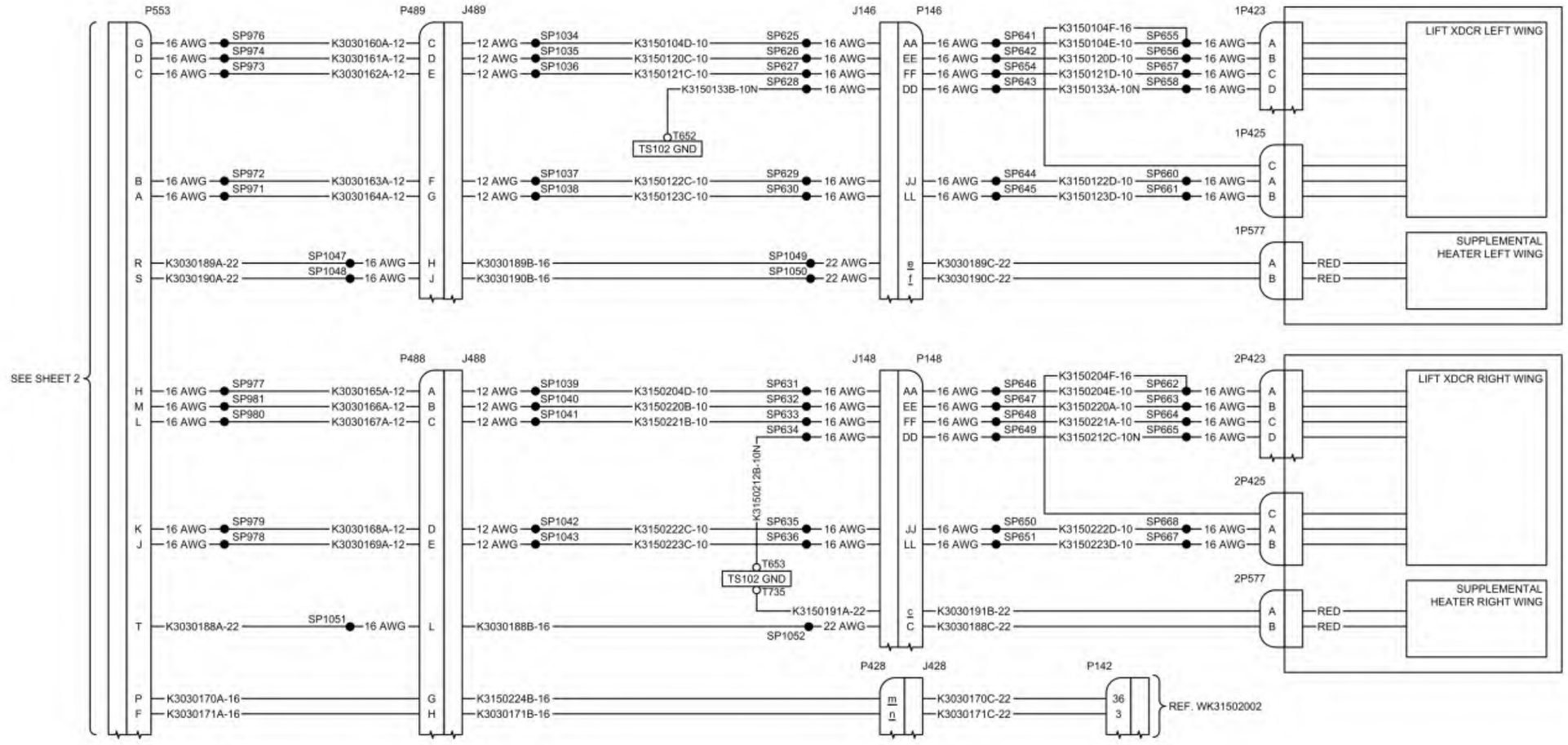

Figure 30-30.3: WK30302002B- (Sheet 1 of 4) Pitot Stall Heat (SN: K014 and On)

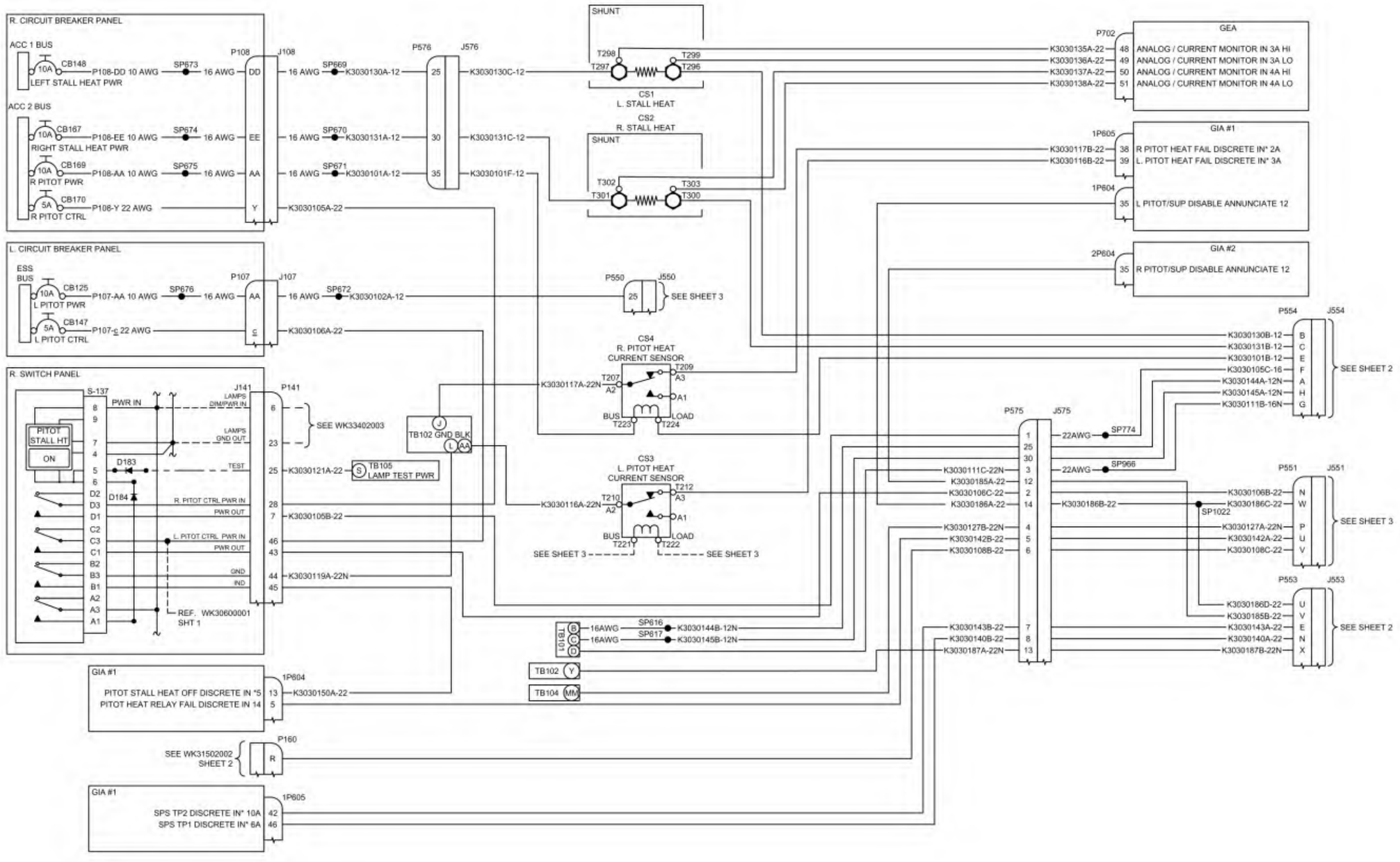

Figure 30-30.3: WK30302002B- (Sheet 2 of 4) Pitot Stall Heat (SN: K014 and On)

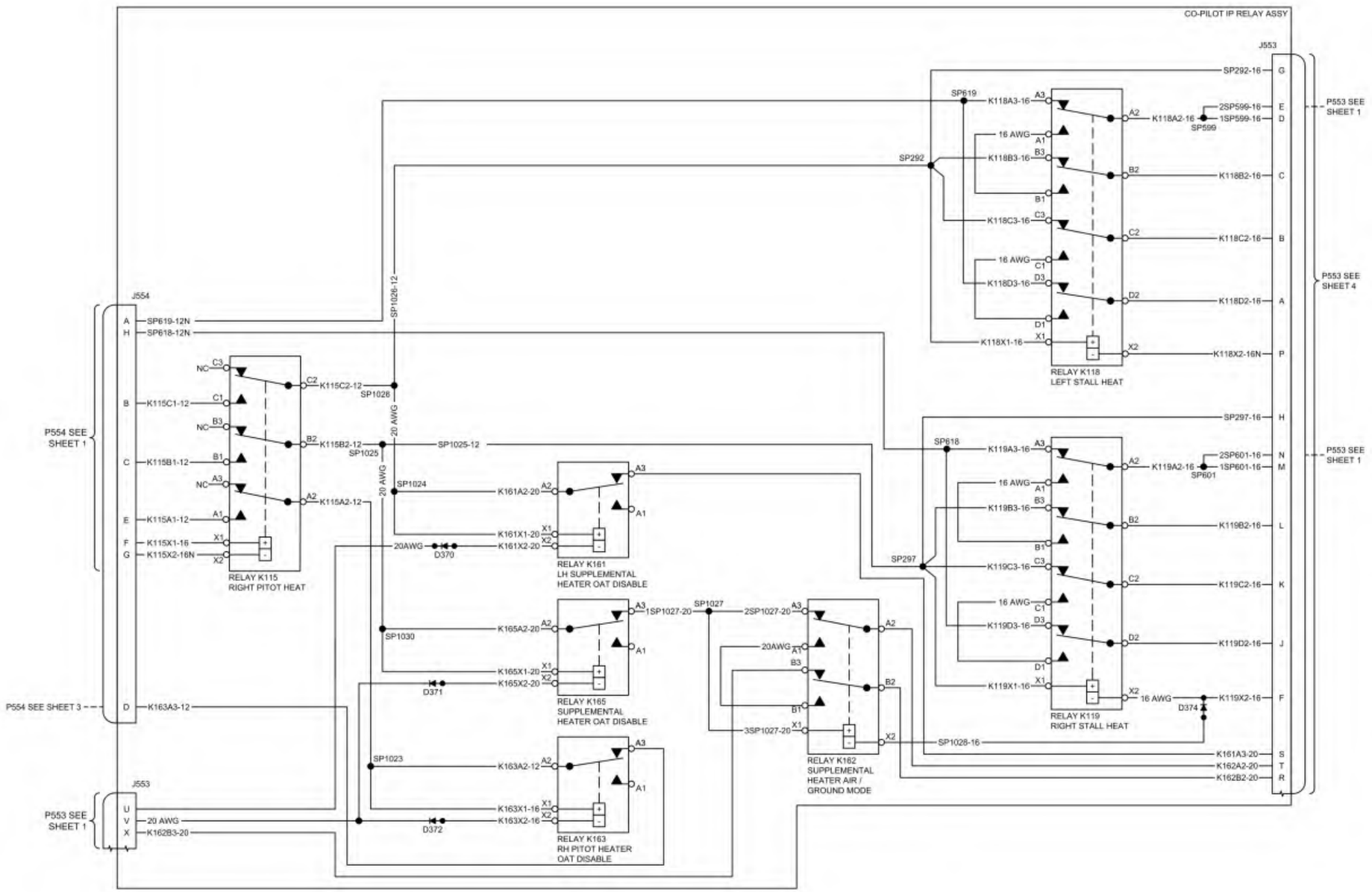

Figure 30-30.3: WK30302002B- (Sheet 3 of 4) Pitot Stall Heat (SN: K014 and On)

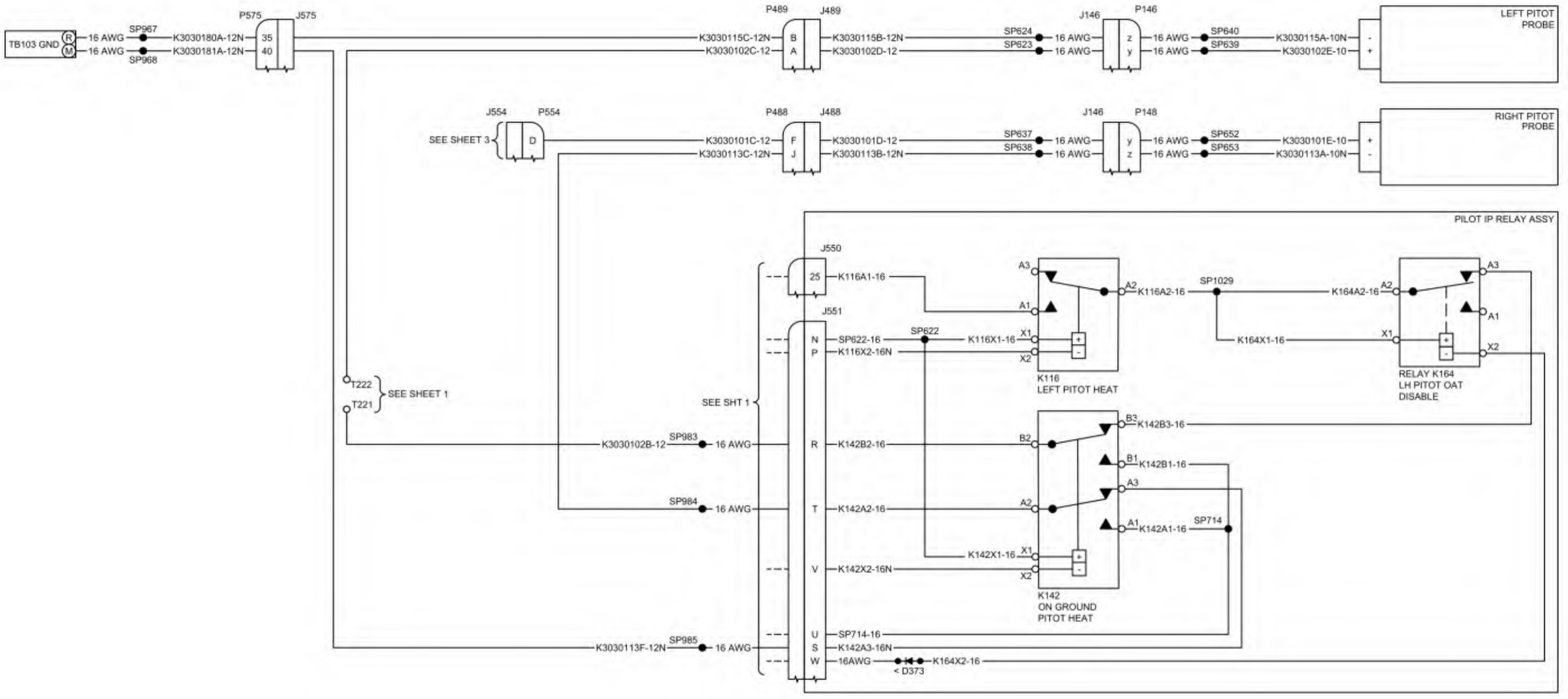

Figure 30-30.3: WK30302002B- (Sheet 4 of 4) Pitot Stall Heat (SN: K014 and On)

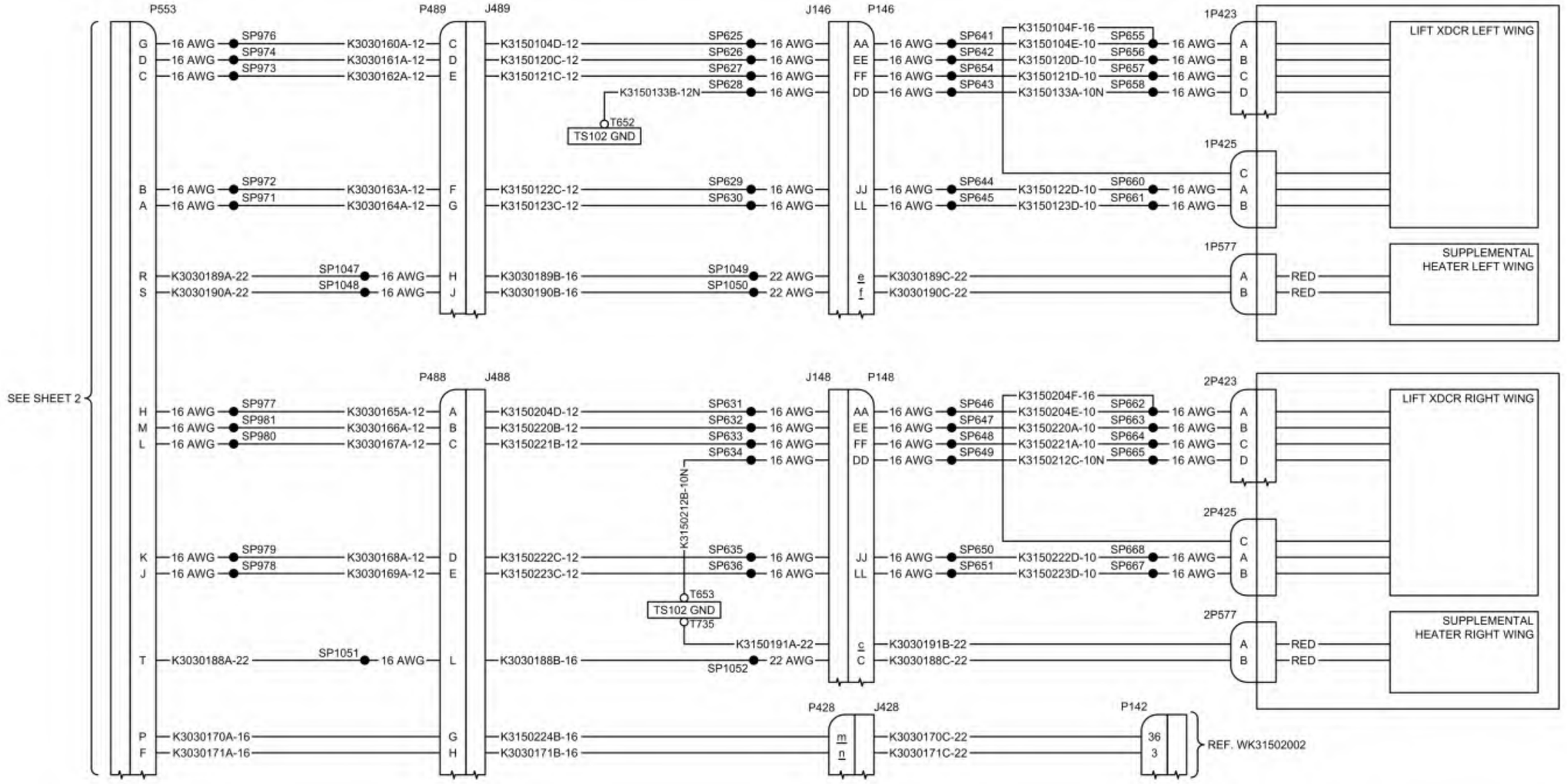

This Page Intentionally Left Blank

Figure 30-60.1: WK30600001-1 Propeller Heat Control

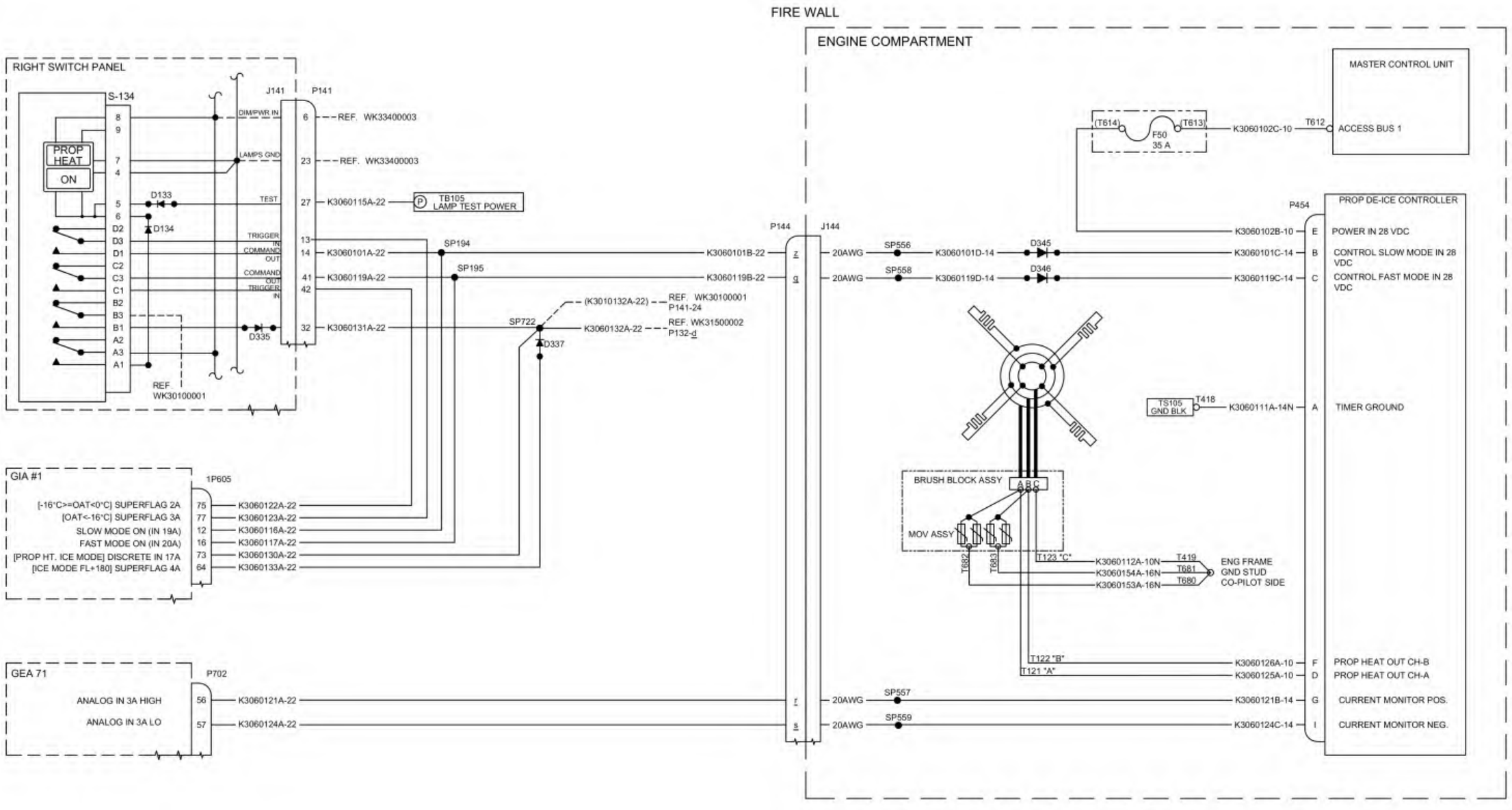

This Page Intentionally Left Blank

Figure 30-70.1: WK30700001-- Windshield De-Ice (SN: K003-K010)

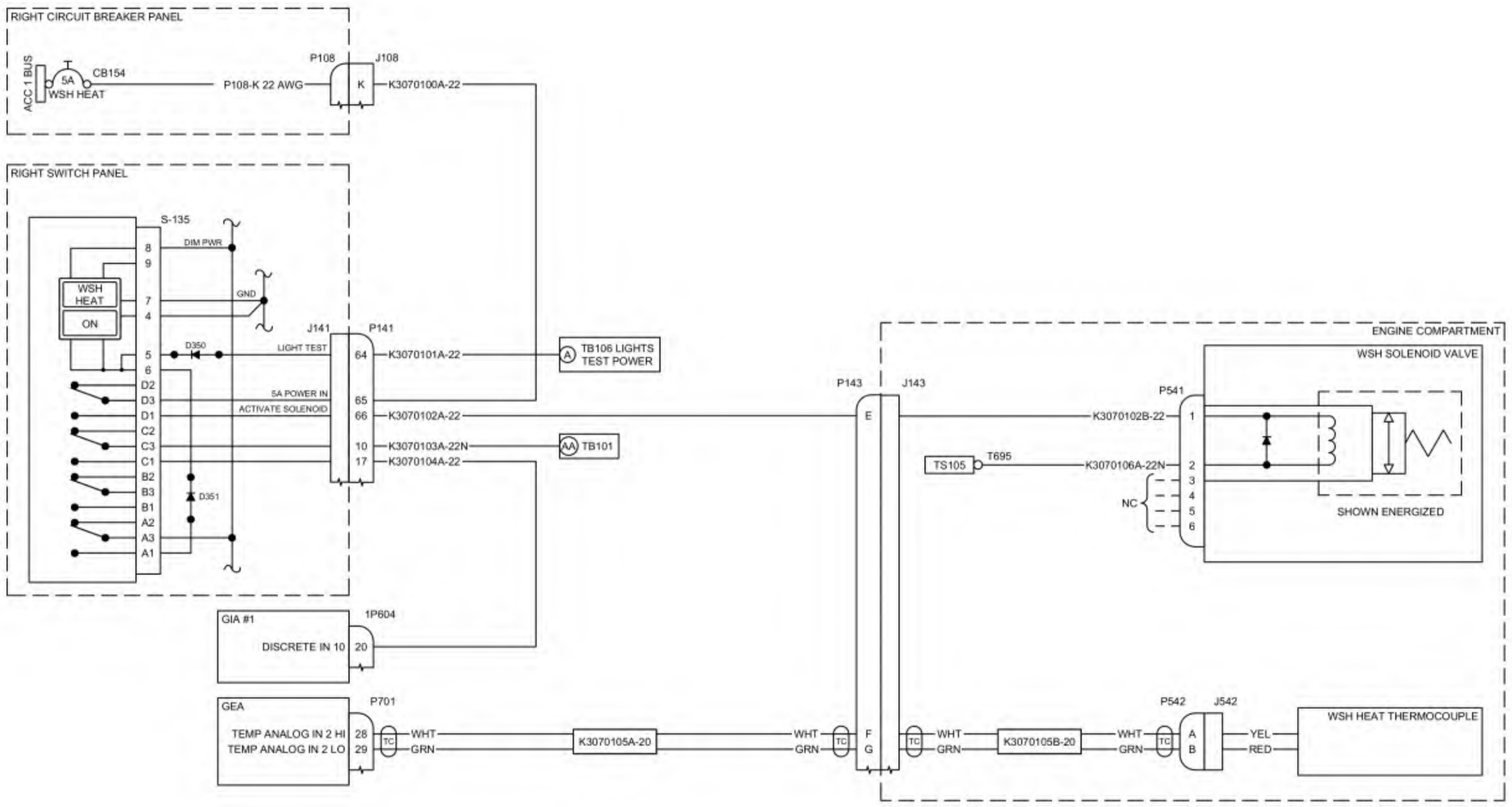

Figure 30-70.2: WK30701001-- Windshield De-Ice (SN: K011-K012 and K003-K010 with SB-0017)

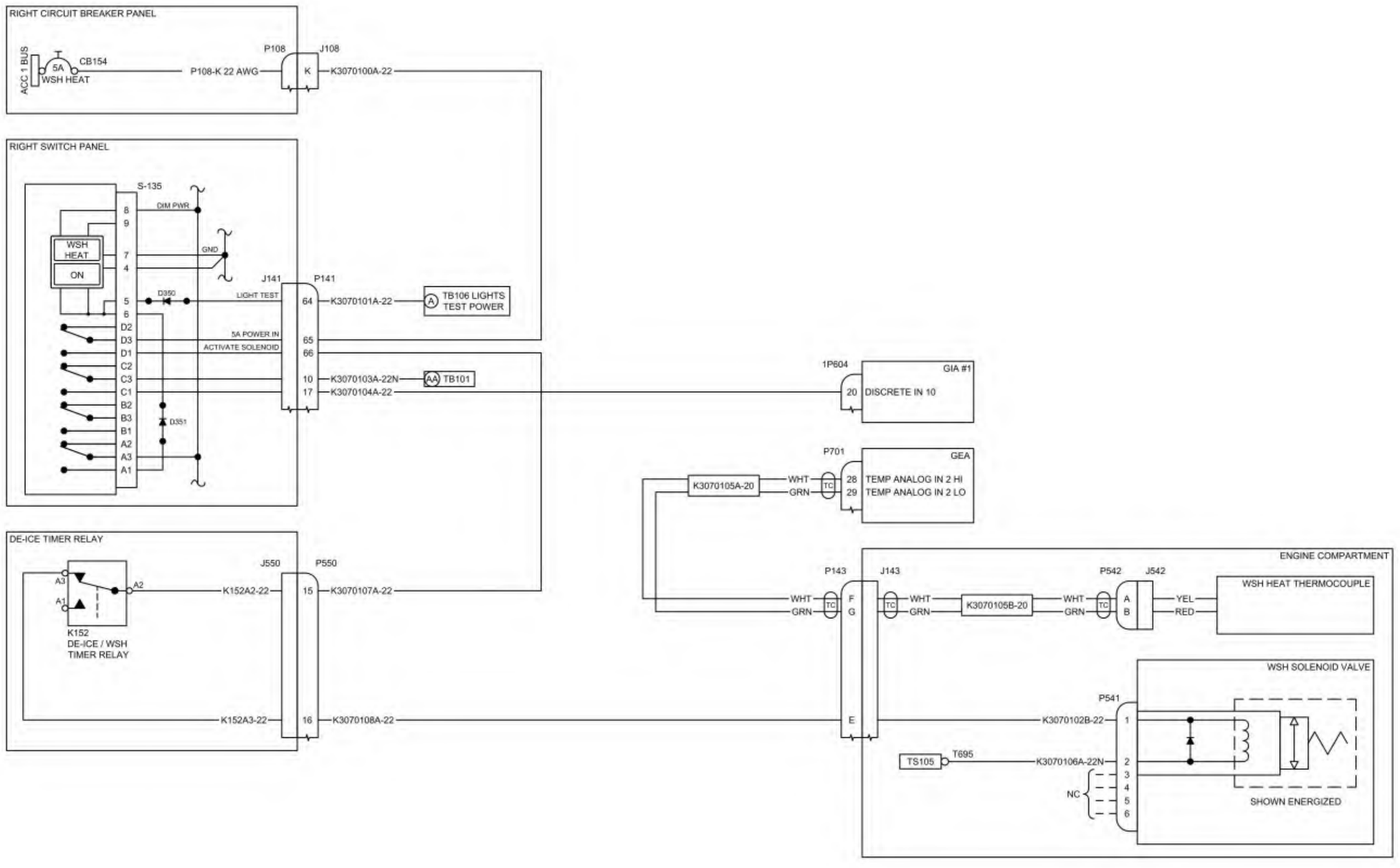

Figure 30-70.3: WK30702001A- Windshield De-Ice (SN: K014 and On)

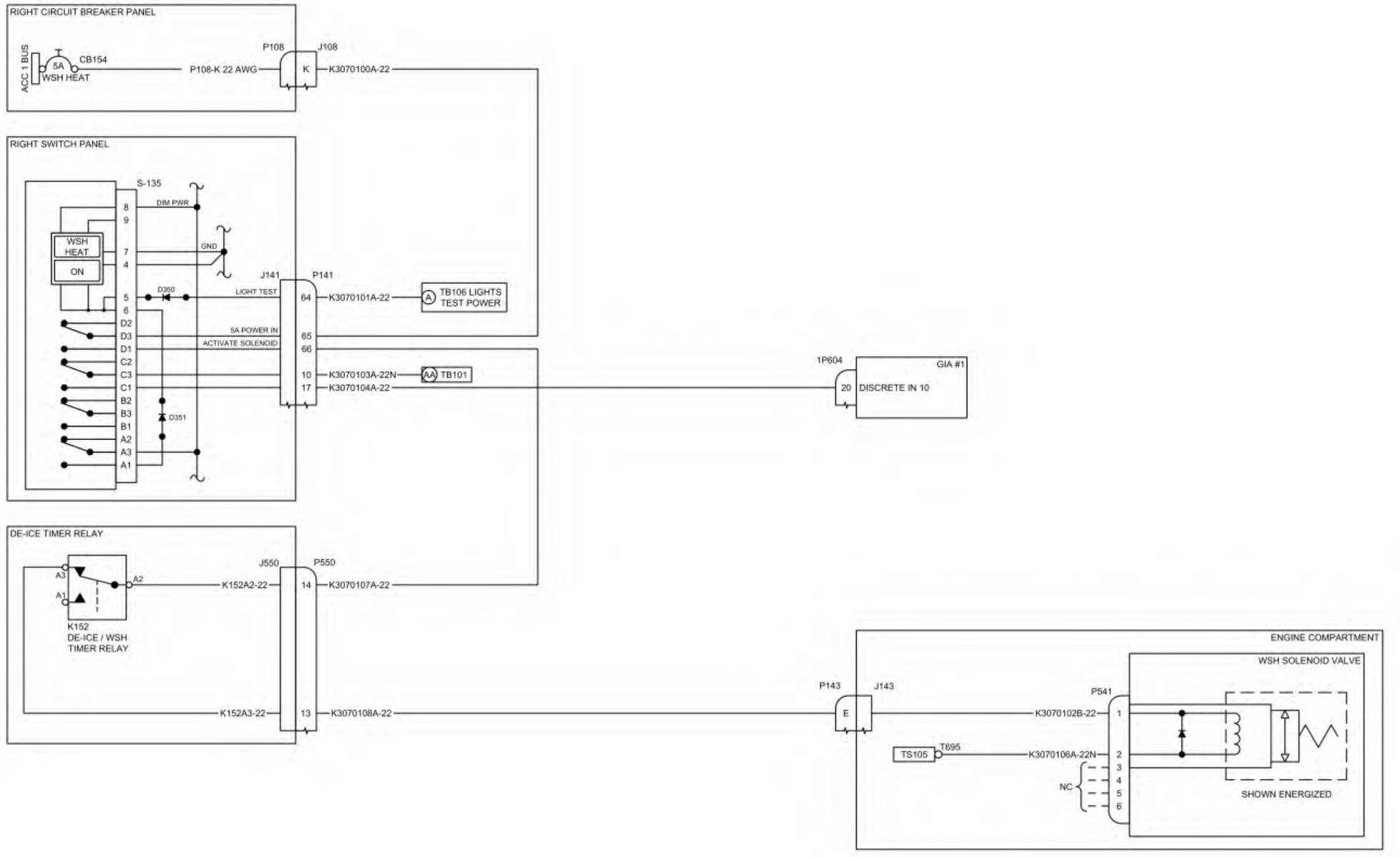

This Page Intentionally Left Blank

Figure 30-80.1: WK30800001A- Ice Detector

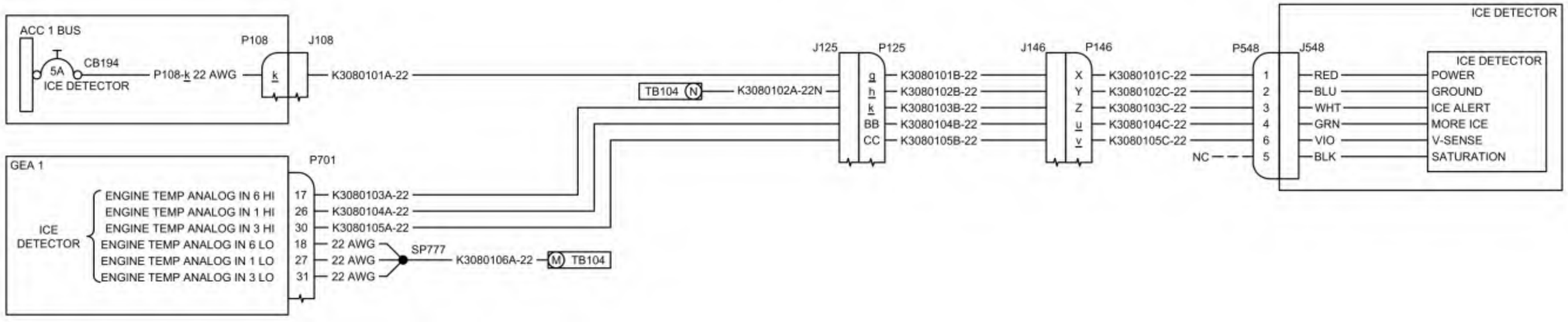

This Page Intentionally Left Blank

CHAPTER
31

Indicating/Recording Systems

This Page Intentionally Left Blank

List of Effective Pages

Chapter/Section	Page Number	Effective Date
31-Title	Page 1	02 Jan 2020
31-Title	Page 2	02 Jan 2020
31-LOEP	Page 1	14 July 2025
31-LOEP	Page 2	02 Jan 2020
31-TOC	Page 1	14 July 2025
31-TOC	Page 2	02 Jan 2020
31-00	Page 1	02 Jan 2020
31-00	Page 2	02 Jan 2020
31-50	Page 1	14 July 2025
31-50	Page 2	14 July 2025
31-50	Page 3	14 July 2025
31-50	Page 4	14 July 2025
31-50	Page 5	14 July 2025
31-50	Page 6	14 July 2025
31-50	Page 7	14 July 2025
31-50	Page 8	14 July 2025
31-50	Page 9	14 July 2025
31-50	Page 10	14 July 2025
31-50	Page 11	14 July 2025
31-50	Page 12	14 July 2025
31-50	Page 13	14 July 2025
31-50	Page 14	14 July 2025
31-50	Page 15	14 July 2025
31-50	Page 16	14 July 2025
31-50	Page 17	14 July 2025
31-50	Page 18	14 July 2025
31-50	Page 19	14 July 2025
31-50	Page 20	14 July 2025

I

This Page Intentionally Left Blank

CHAPTER 31

Table of Contents

List of Effective Pages ..... 31-LOEP / Page 1
Table of Contents ..... 31-TOC / Page1

Paragraph **Page Number**

Indicating/Recording Systems

1. General ..... 31-00 / Page 1

Central Warning Systems

Figure 31-50.1: WK31500002-- (Sheet 1 of 5) Stall Prevention System (SN: K003-K010 without SB-0035) ..... 31-50 / Page 1

Figure 31-50.2: WK31500002A- (Sheet 1 of 5) Stall Prevention System (SN: K003-K010 with SB-0035) ..... 31-50 / Page 6

Figure 31-50.3: WK31502002-- (Sheet 1 of 5) Stall Prevention System (SN: K011 - K055 without SB-0035, and K003-K010 with SB-0017) ..... 31-50 / Page 11

Figure 31-50.4: WK31502002A- (Sheet 1 of 5) Stall Prevention System (SN: K056 and On, and K011-K055 with SB-0035) ..... 31-50 / Page 16

I

This Page Intentionally Left Blank

INDICATING/RECORDING SYSTEMS

1. General

The indicating/recording systems on this airplane which provide visual or aural warning of conditions in unrelated systems consist of the hour meter and/or the stall warning system.

This Page Intentionally Left Blank

Figure 31-50.1: WK31500002-- (Sheet 1 of 5) Stall Prevention System (SN: K003-K010 without SB-0035)

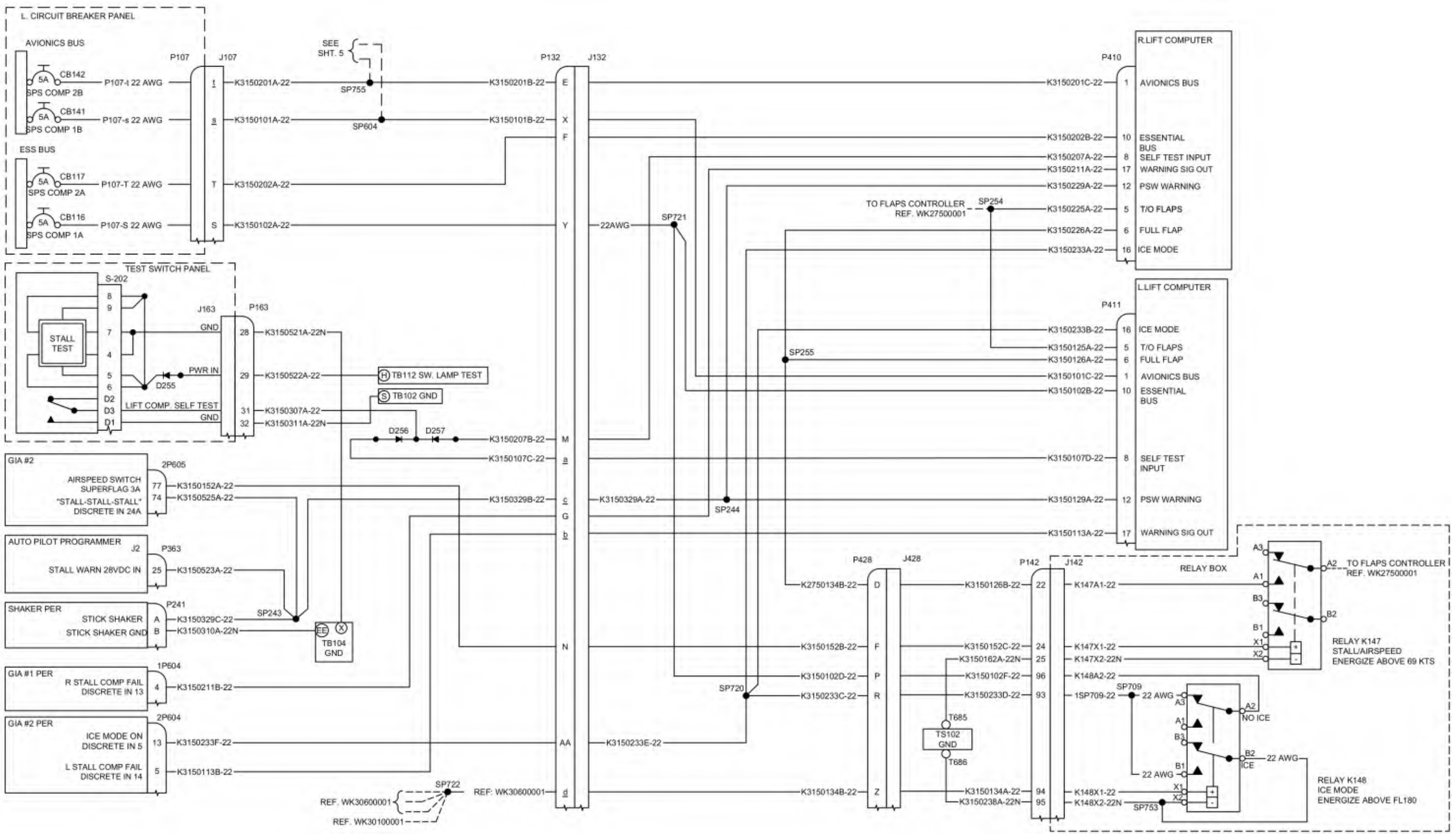

Figure 31-50.1: WK31500002-- (Sheet 2 of 5) Stall Prevention System (SN: K003-K010 without SB-0035)

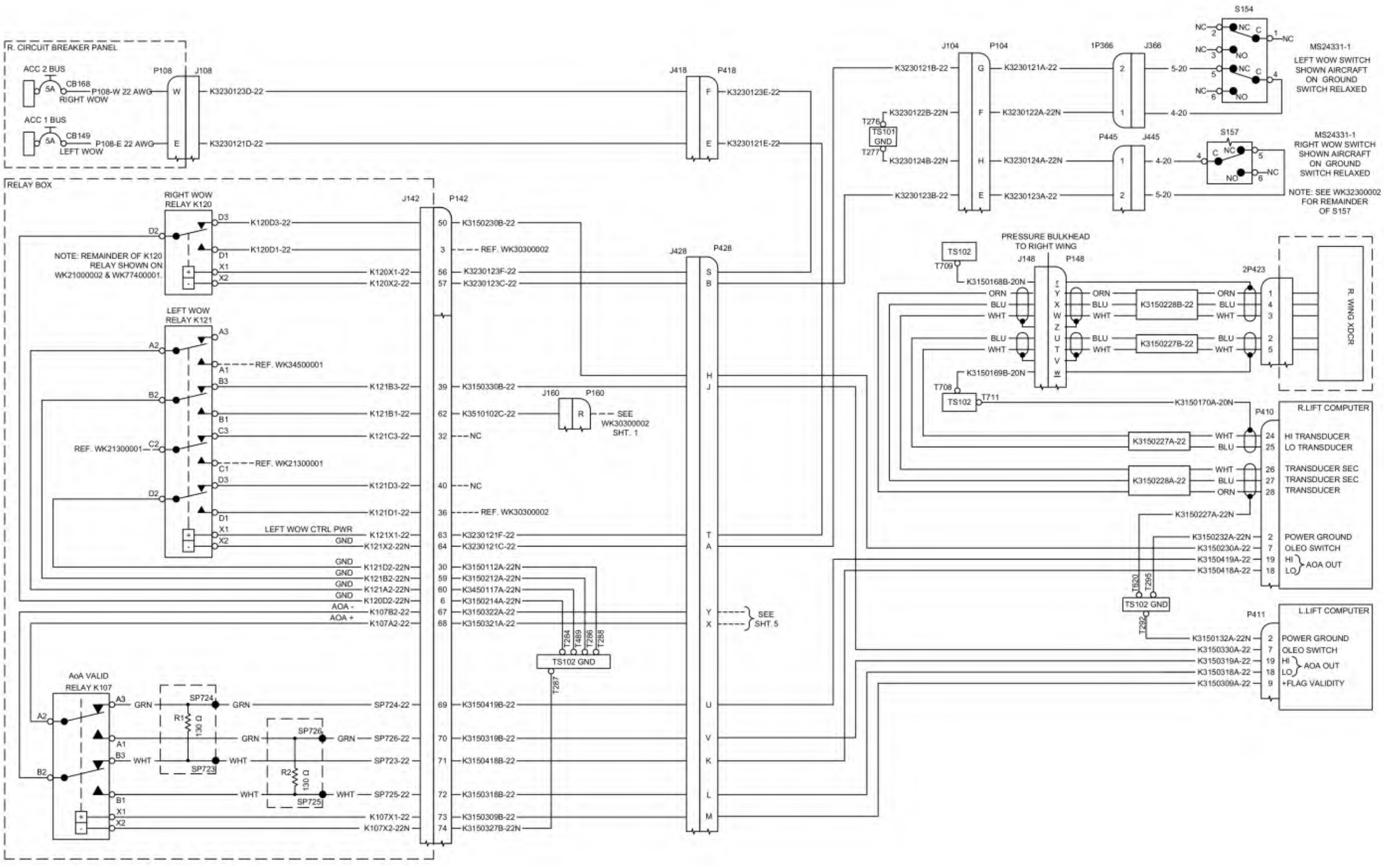

Figure 31-50.1: WK31500002-- (Sheet 3 of 5) Stall Prevention System (SN: K003-K010 without SB-0035)

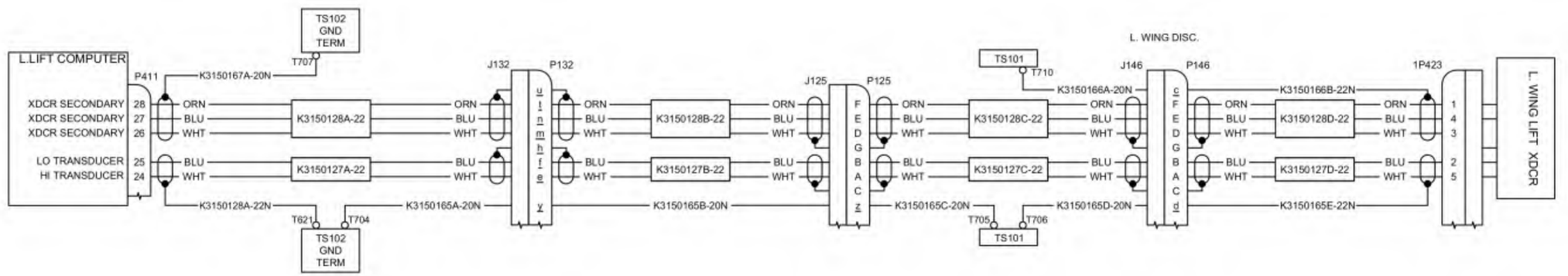

Figure 31-50.1: WK31500002-- (Sheet 4 of 5) Stall Prevention System (SN: K003-K010 without SB-0035)

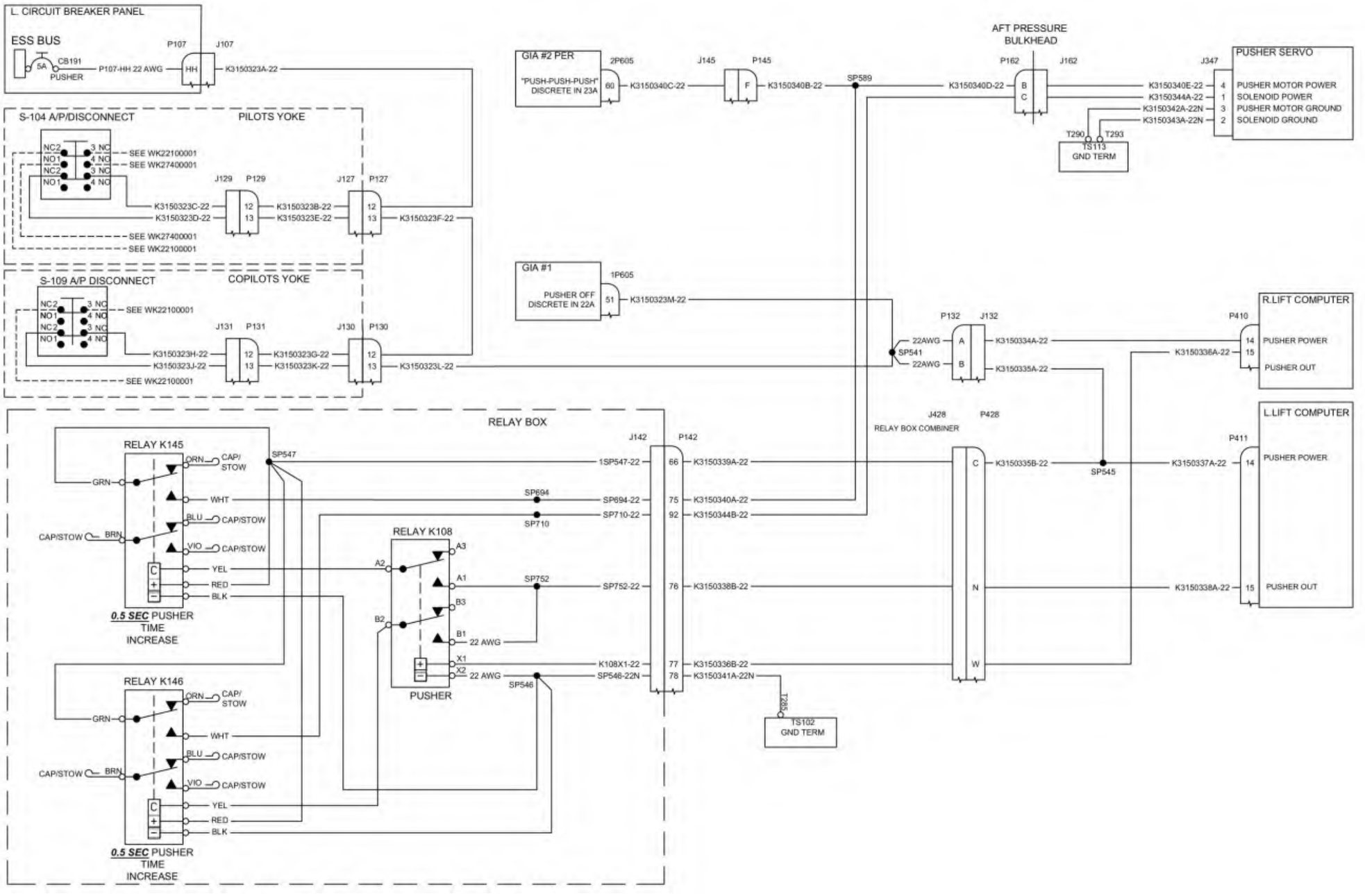

Figure 31-50.1: WK31500002-- (Sheet 5 of 5) Stall Prevention System (SN: K003-K010 without SB-0035)

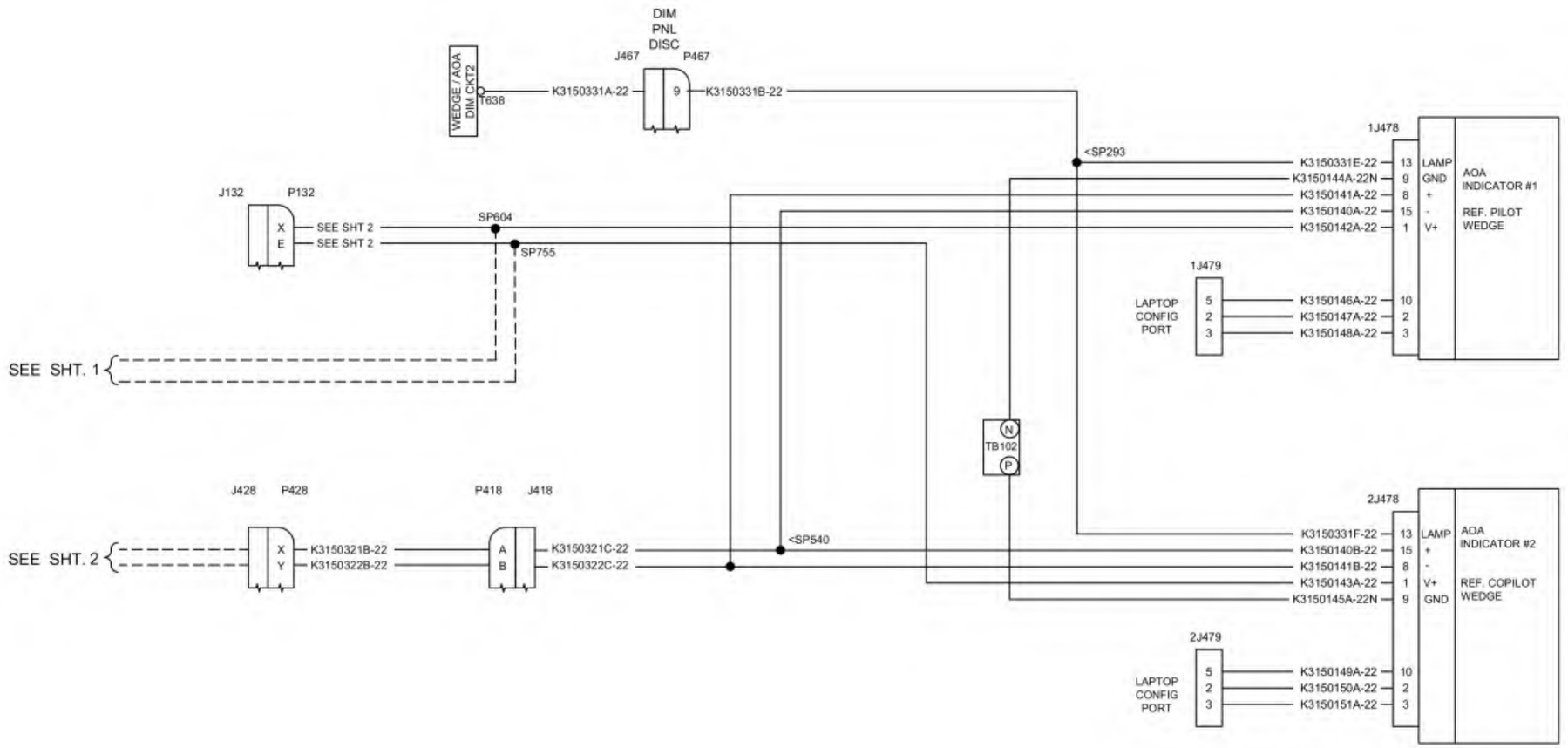

Figure 31-50.2: WK31500002A- (Sheet 1 of 5) Stall Prevention System (SN: K003-K010 with SB-0035)

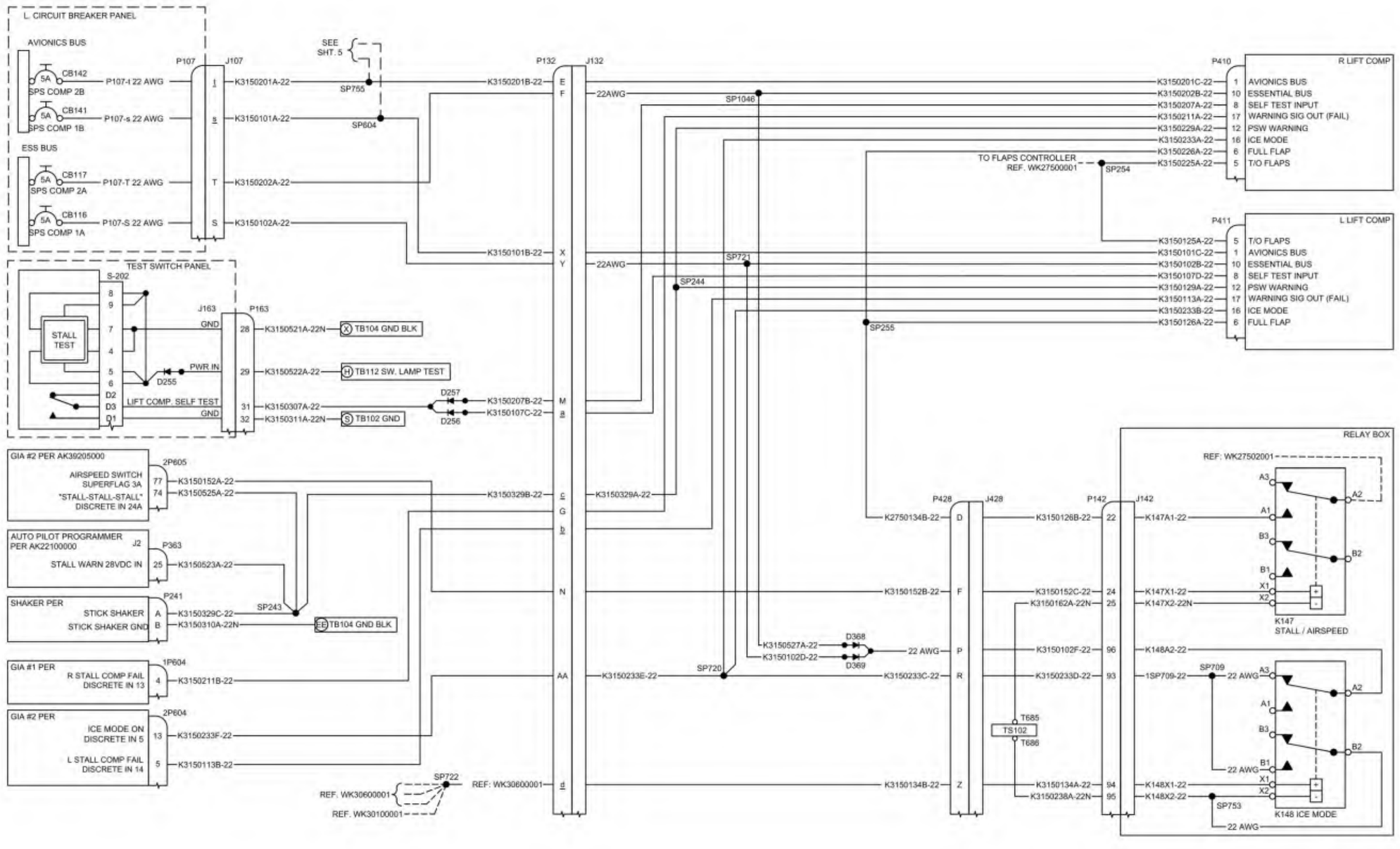

Figure 31-50.2: WK31500002A- (Sheet 2 of 5) Stall Prevention System (SN: K003-K010 with SB-0035)

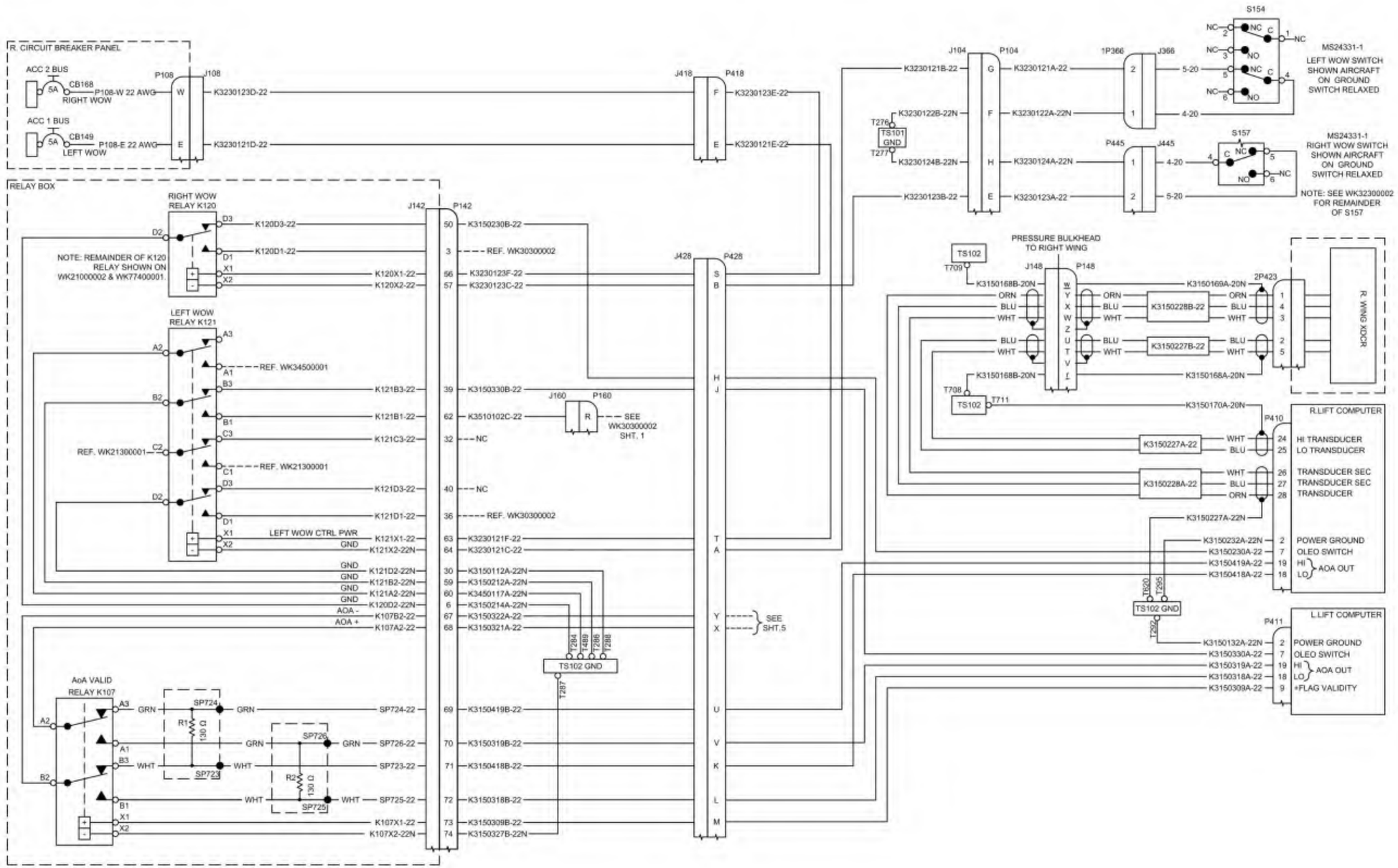

Figure 31-50.2: WK31500002A- (Sheet 3 of 5) Stall Prevention System (SN: K003-K010 with SB-0035)

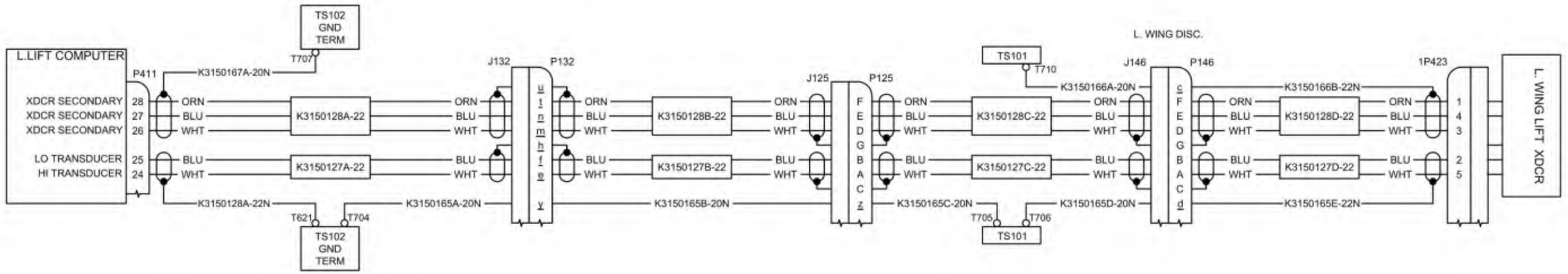

Figure 31-50.2: WK31500002A- (Sheet 4 of 5) Stall Prevention System (SN: K003-K010 with SB-0035)

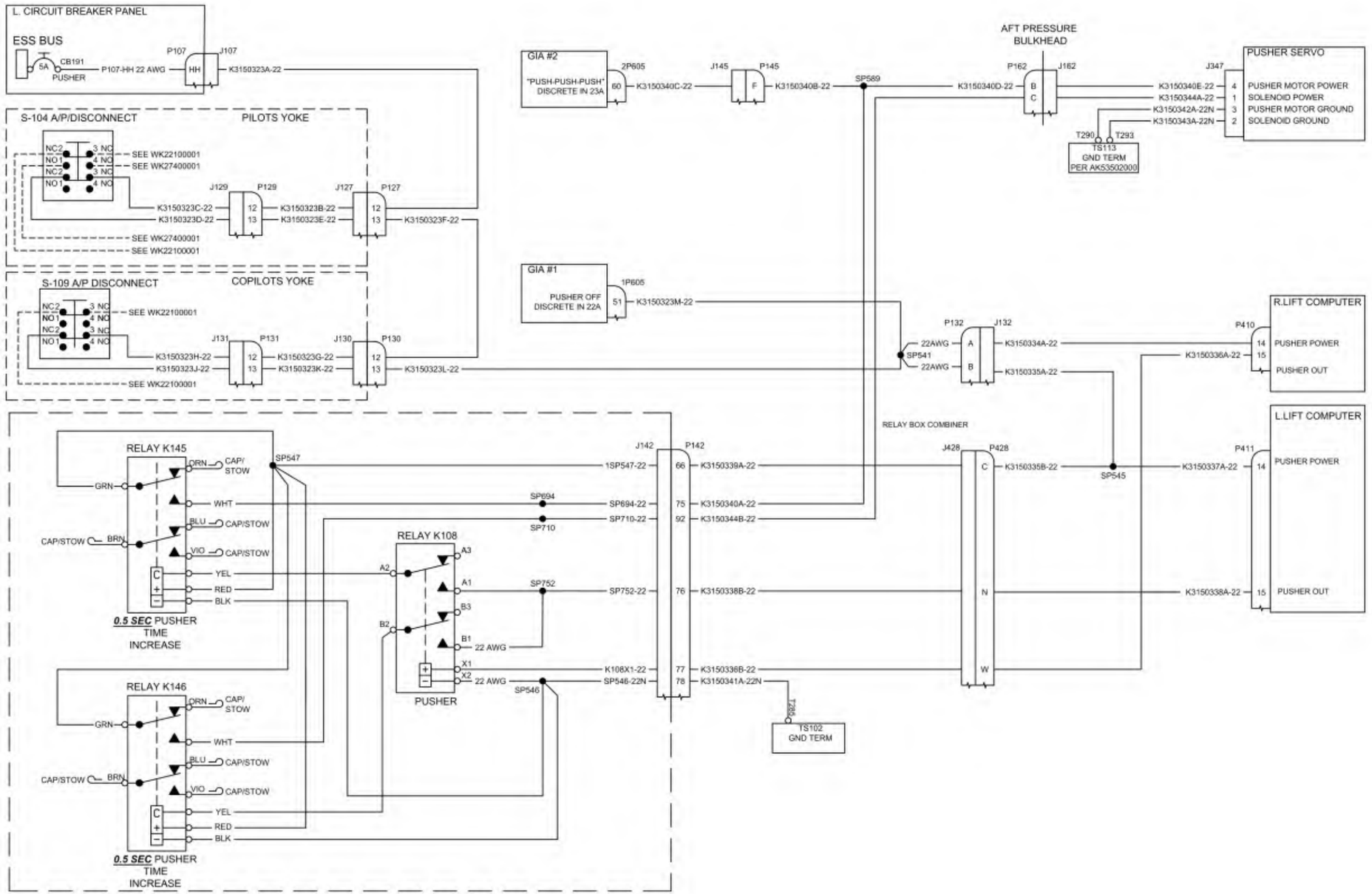

Figure 31-50.2: WK31500002A- (Sheet 5 of 5) Stall Prevention System (SN: K003-K010 with SB-0035)

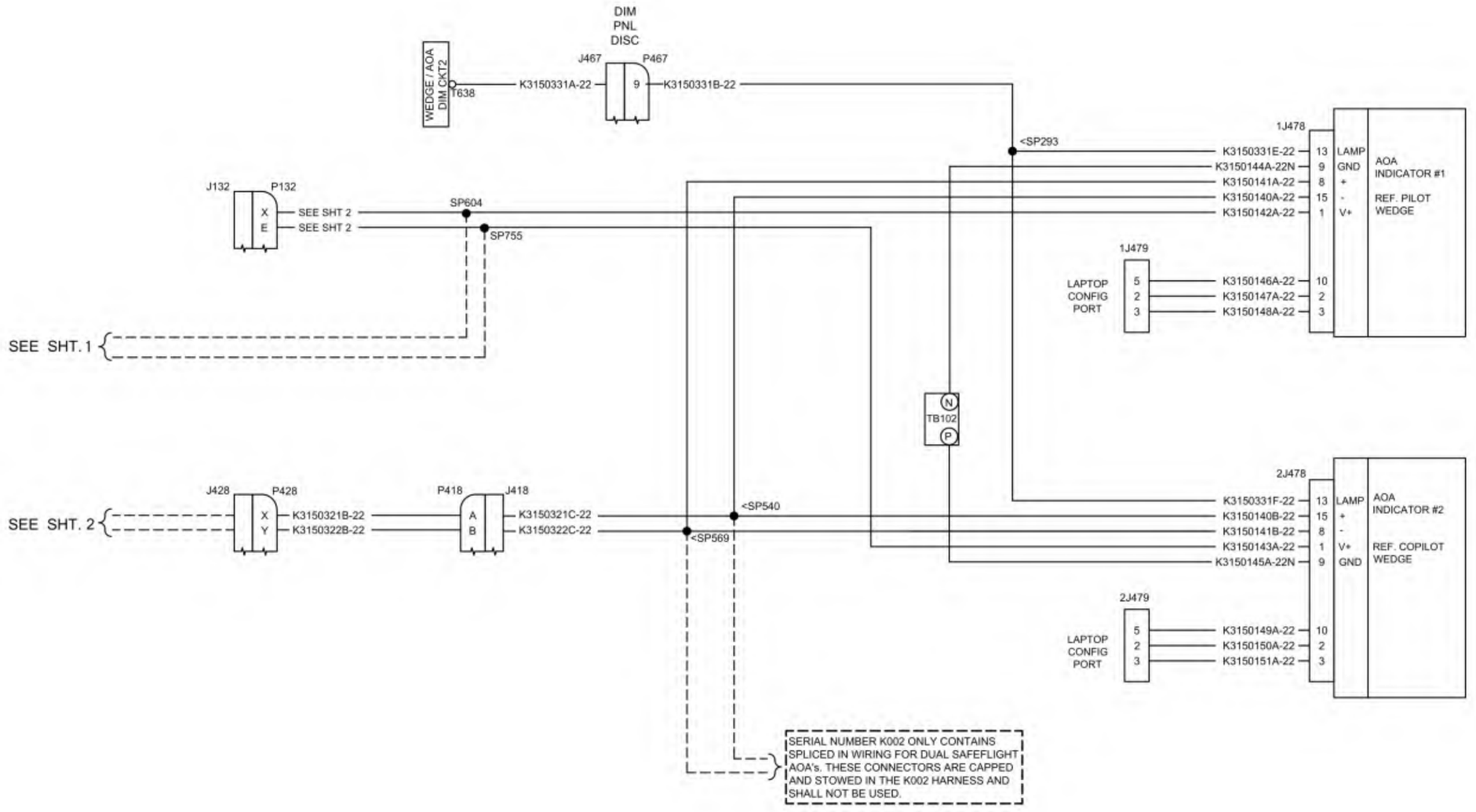

Figure 31-50.3: WK31502002-- (Sheet 1 of 5) Stall Prevention System (SN: K011 - K055 without SB-0035, and K003-K010 with SB-0017)

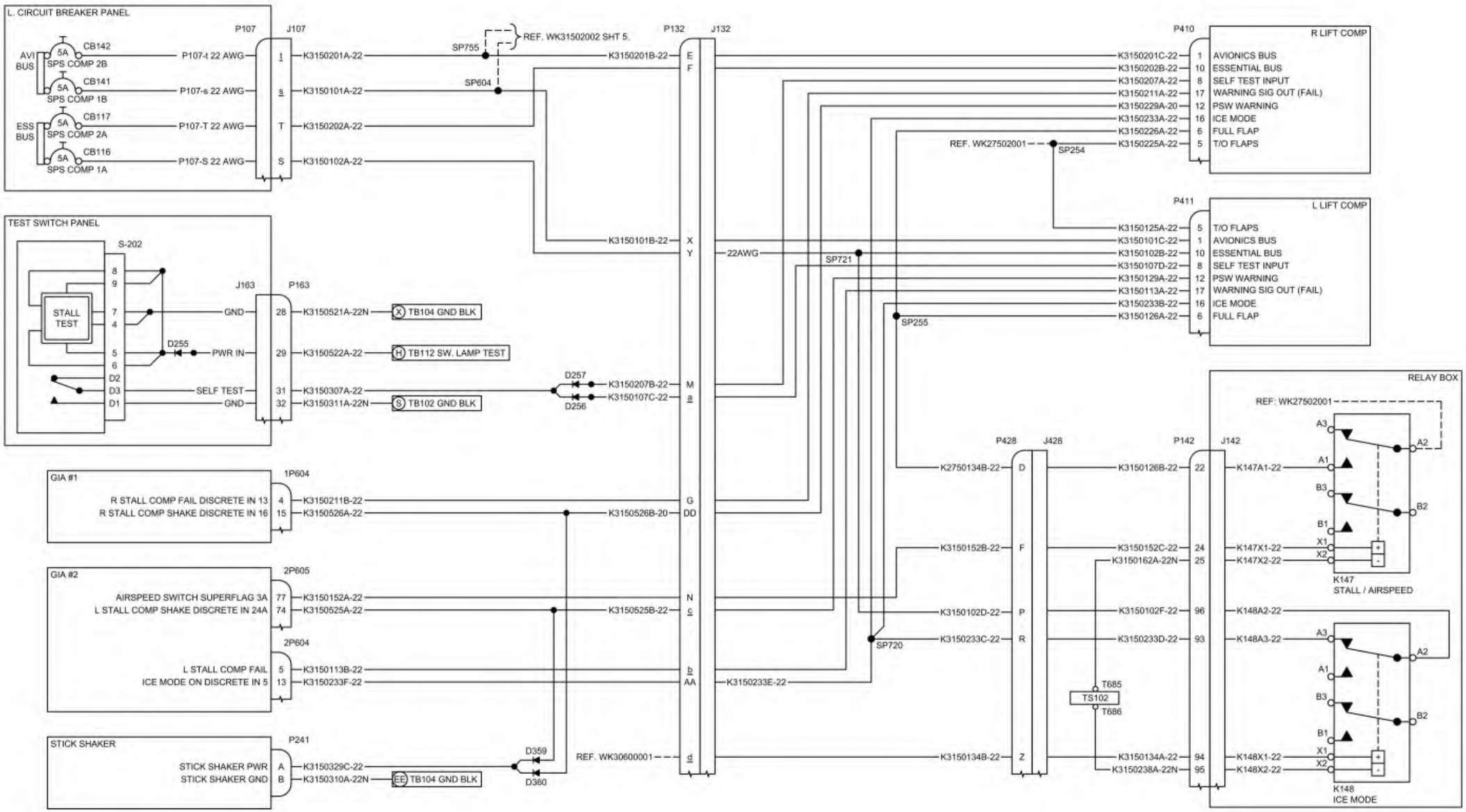

Figure 31-50.2: WK31502002-- (Sheet 2 of 5) Stall Prevention System (SN: K011 - K055 without SB-0035, and K003-K010 with SB-0017)

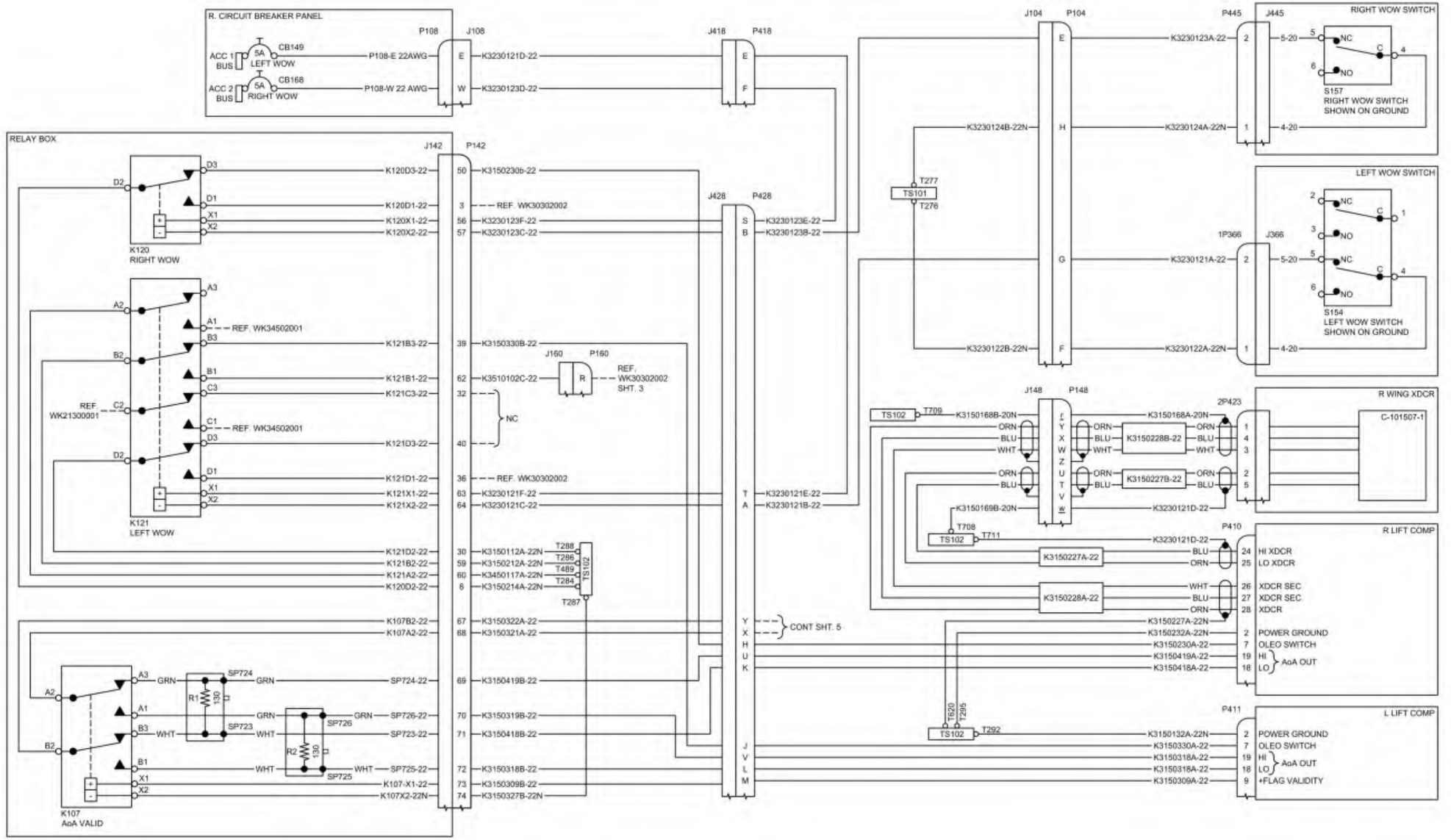

Figure 31-50.2: WK31502002-- (Sheet 3 of 5) Stall Prevention System (SN: K011 - K055 without SB-0035, and K003-K010 with SB-0017)

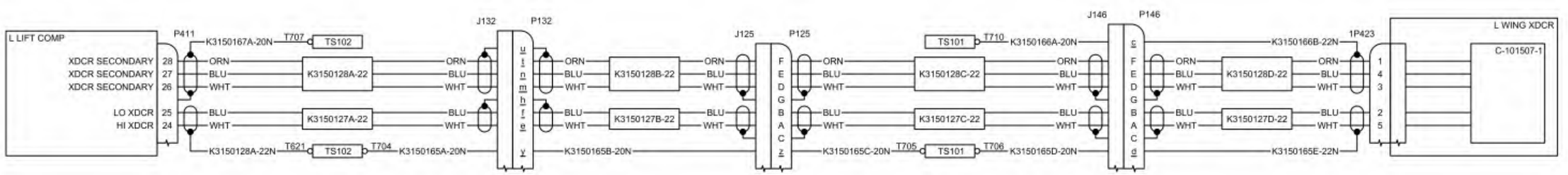

Figure 31-50.2: WK31502002-- (Sheet 4 of 5)Stall Prevention System (SN: K011 - K055 without SB-0035, and K003-K010 with SB-0017)

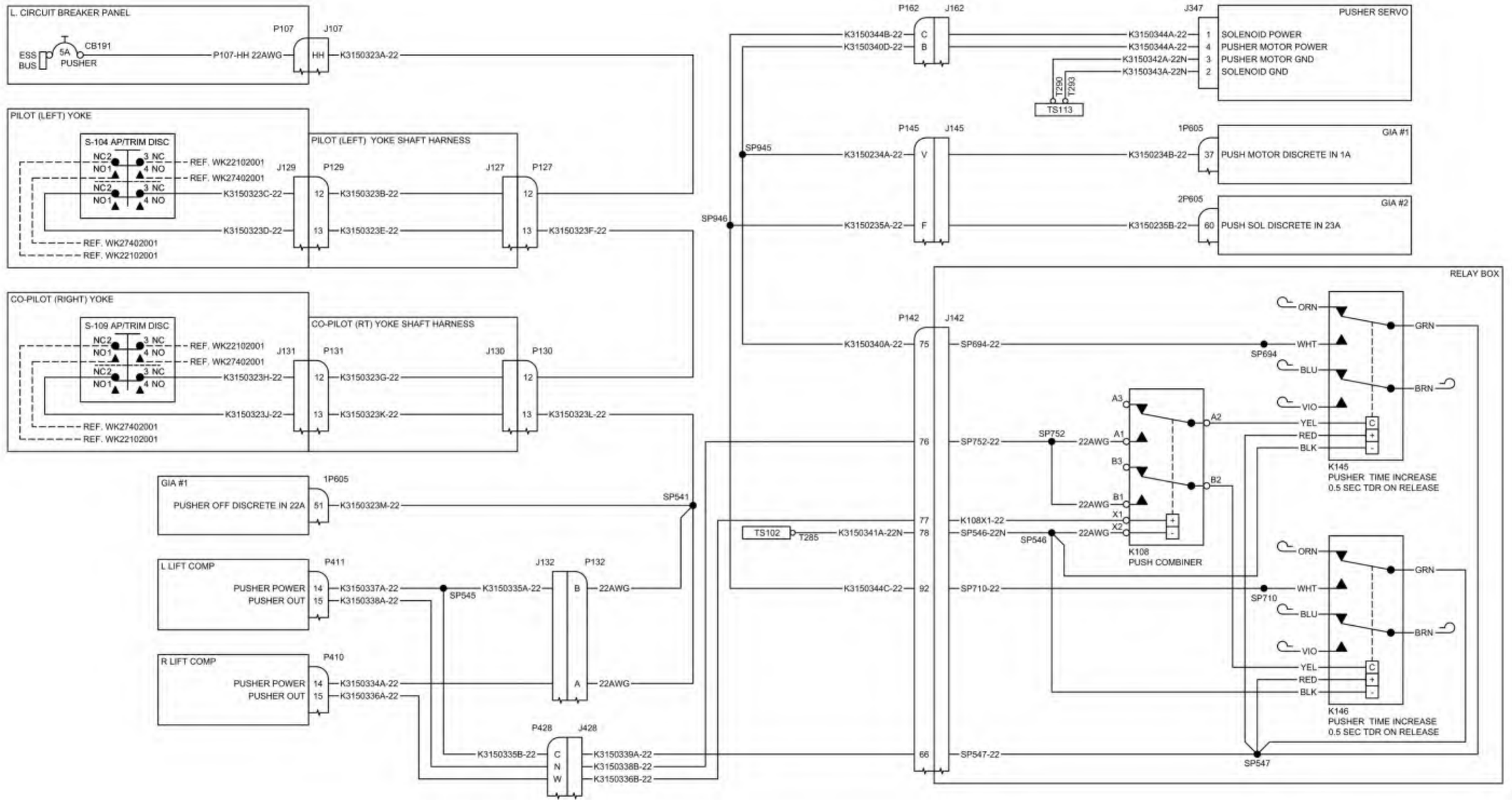

Figure 31-50.2: WK31502002-- (Sheet 5 of 5) Stall Prevention System (SN: K011 - K055 without SB-0035, and K003-K010 with SB-0017)

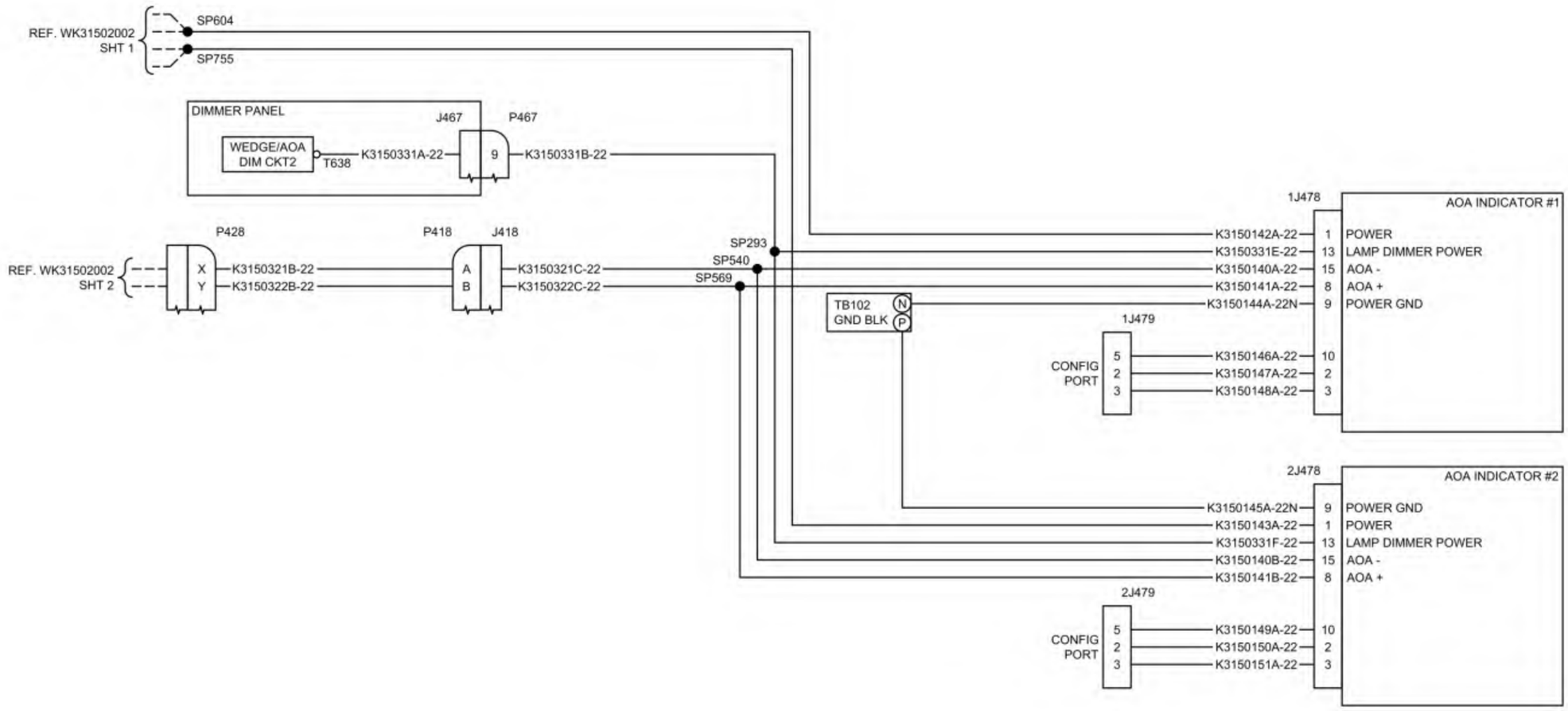

Figure 31-50.4: WK31502002A- (Sheet 1 of 5) Stall Prevention System (SN: K056 and On, and K011-K055 with SB-0035)

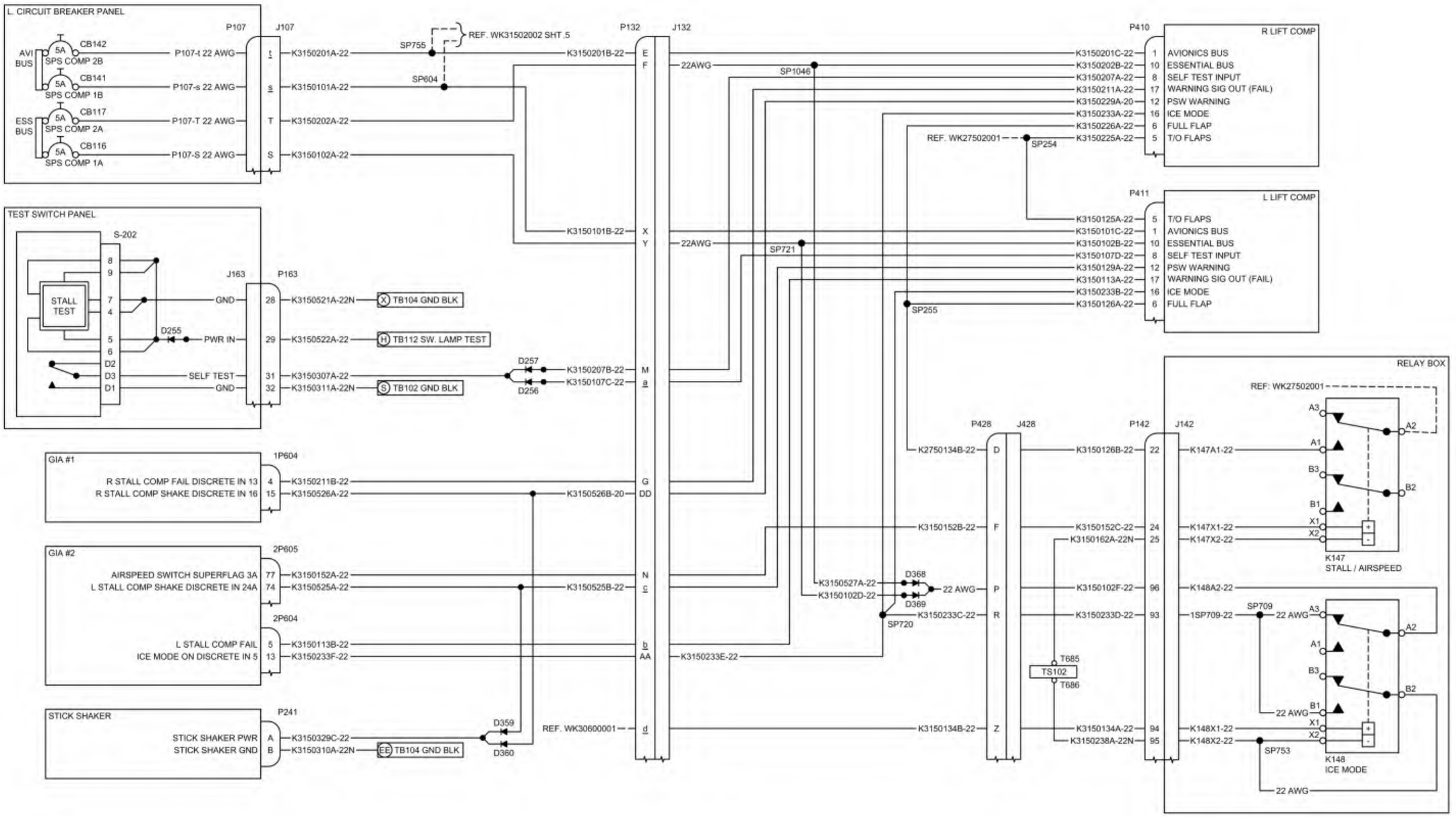

Figure 31-50.4: WK31502002A- (Sheet 2 of 5) Stall Prevention System (SN: K056 and On, and K011-K055 with SB-0035)

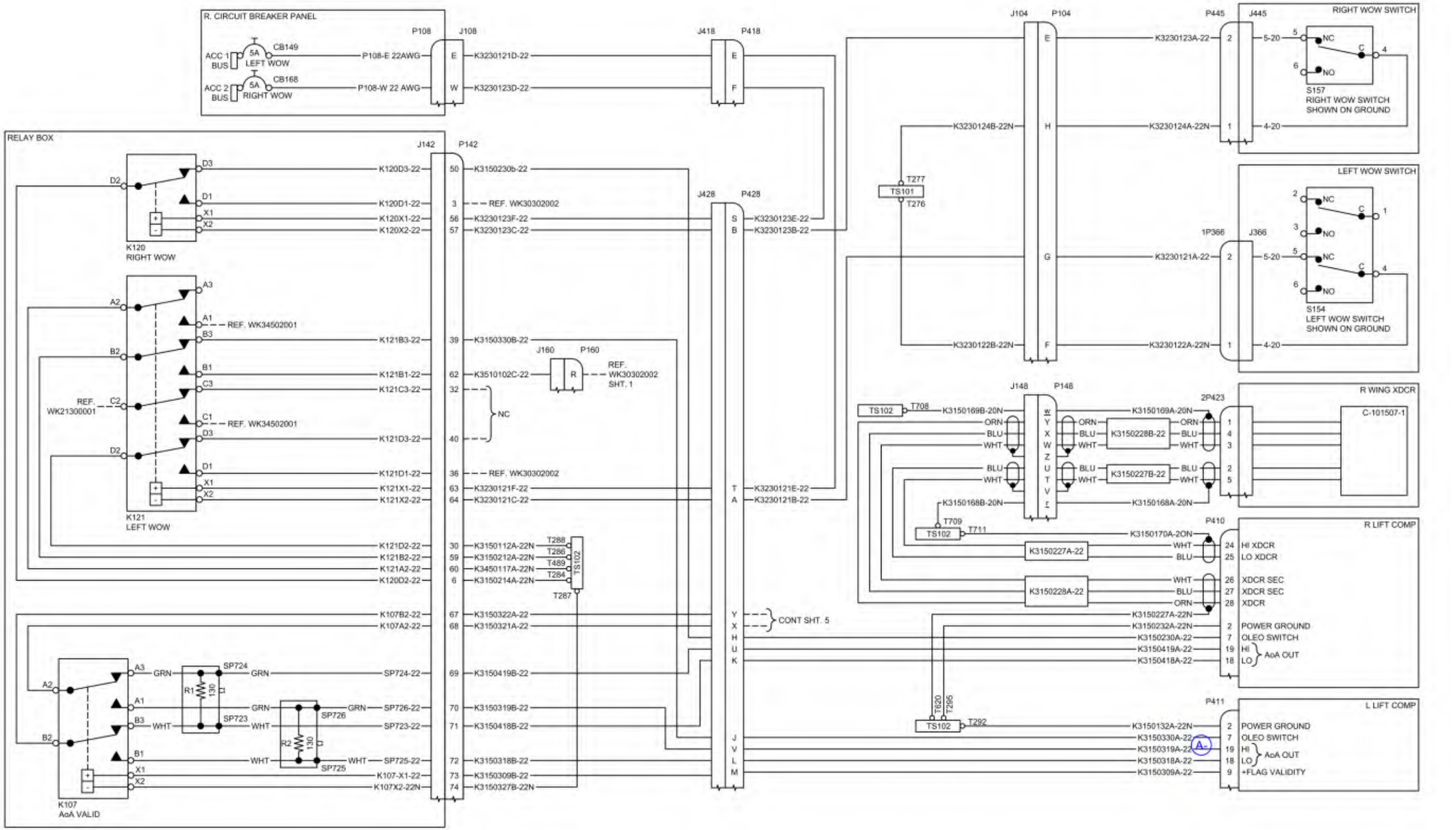

Figure 31-50.4: WK31502002A- (Sheet 3 of 5) Stall Prevention System (SN: K056 and On, and K011-K055 with SB-0035)

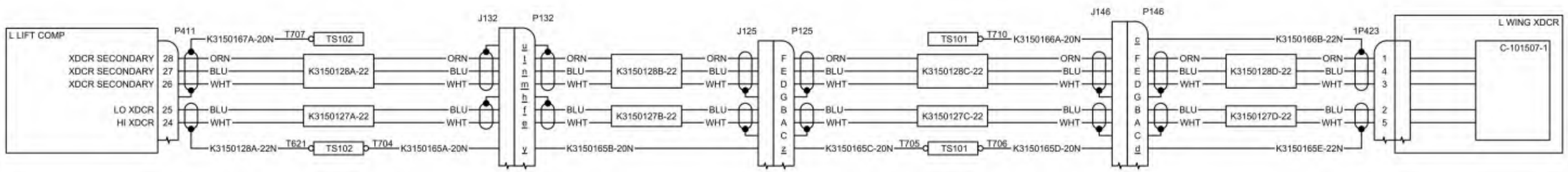

Figure 31-50.4: WK31502002A- (Sheet 4 of 5) Stall Prevention System (SN: K056 and On, and K011-K055 with SB-0035)

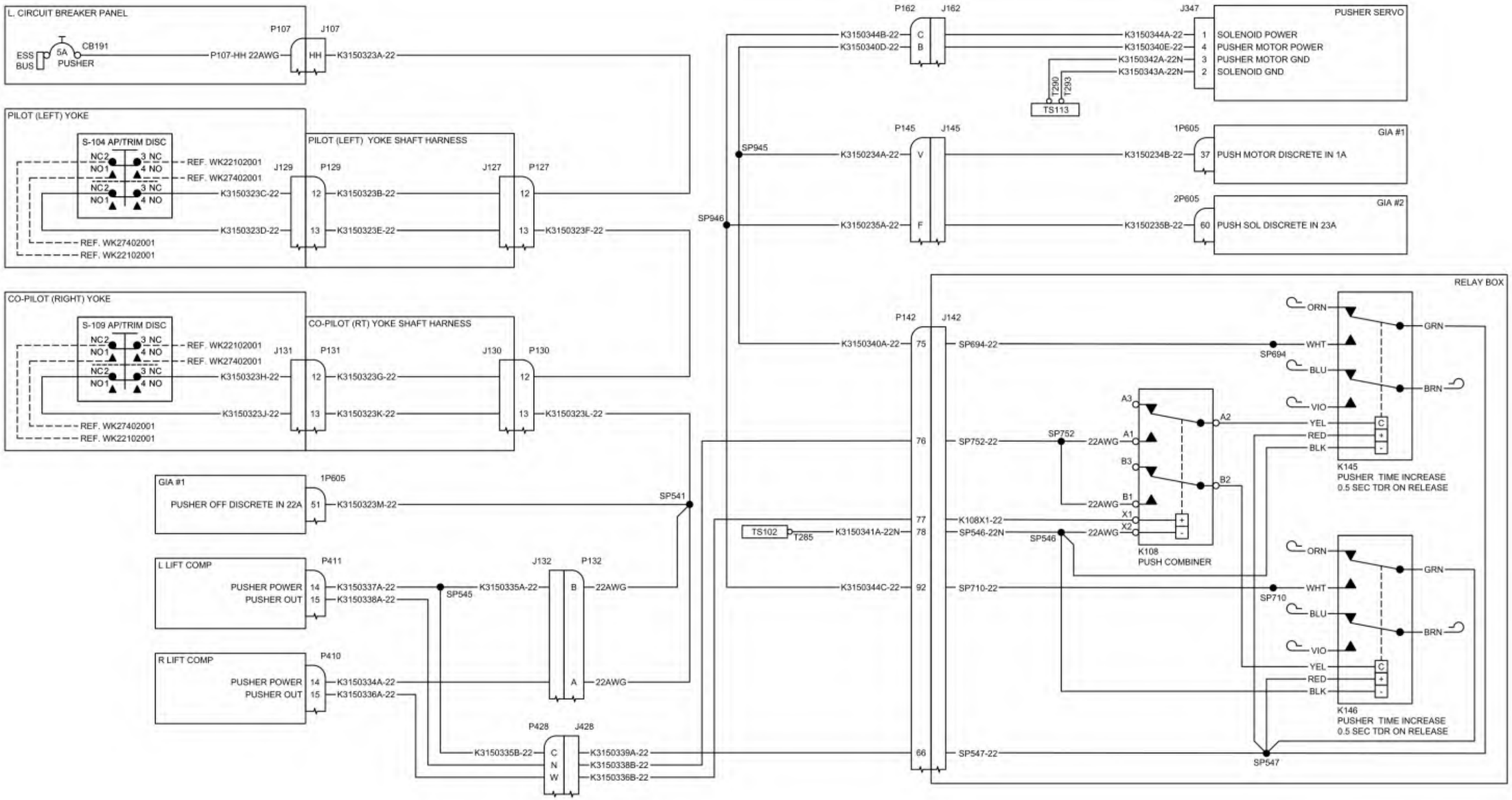

Figure 31-50.4: WK31502002A- (Sheet 5 of 5) Stall Prevention System (SN: K056 and On, and K011-K055 with SB-0035)

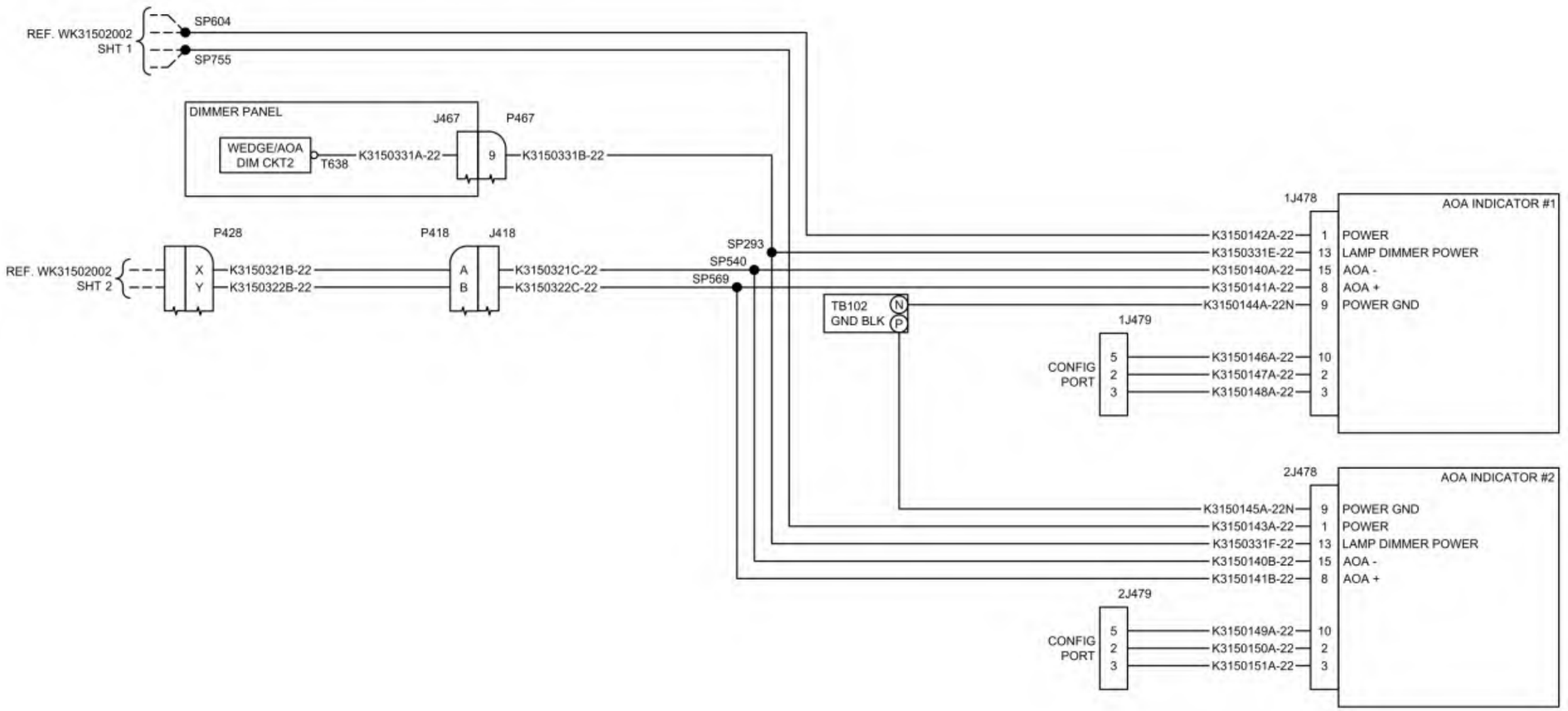

CHAPTER
32

Landing Gear

This Page Intentionally Left Blank

List of Effective Pages

Chapter/Section	Page Number	Effective Date
32-Title	Page 1	02 Jan 2020
32-Title	Page 2	02 Jan 2020
32-LOEP	Page 1	14 July 2025
32-LOEP	Page 2	02 Jan 2020
32-TOC	Page 1	14 Jul 2021
32-TOC	Page 2	02 Jan 2020
32-00	Page 1	02 Jan 2020
32-00	Page 2	02 Jan 2020
32-30	Page 1	14 July 2025
32-30	Page 2	14 July 2025
32-30	Page 3	14 July 2025
32-30	Page 4	14 July 2025
32-30	Page 5	14 July 2025
32-30	Page 6	14 July 2025

This Page Intentionally Left Blank

CHAPTER 32

Table of Contents

List of Effective Pages ..... 32-LOEP / Page 1
Table of Contents ..... 32-TOC / Page1

Paragraph **Page Number**

Landing Gear

1. General ..... 32-00 / Page 1

Main Gear and Doors

Figure 32-30.1: WK32300002-- (Sheet 1 of 3) Landing Gear and Hydraulic Pump (SN:K003-K010) 32-30 / Page 1
Figure 32-30.2: WK32302002A- (Sheet 1 of 3) Landing Gear and Hydraulic Pump (SN: K011 and On, and K003-K010 with SB-0017) ..... 32-30 / Page 4

This Page Intentionally Left Blank

LANDING GEAR

1. General

This aircraft has retractable main and nose gear in a tricycle configuration. Taxiing, takeoff, and landing forces are absorbed using hydro-pneumatic dampers on each main gear and a hydro-pneumatic strut on the nose gear. Each landing gear has tubeless tires on aluminum wheels. Braking is done using hydraulic disc brakes on each main gear. The brakes are operated by master cylinders attached to the left and right rudder pedals of both the pilot and the copilot. Steering of the aircraft is done by directional braking and by turning the nose gear.

This Page Intentionally Left Blank

Figure 32-30.1: WK32300002-- (Sheet 1 of 3) Landing Gear and Hydraulic Pump (SN:K003-K010)

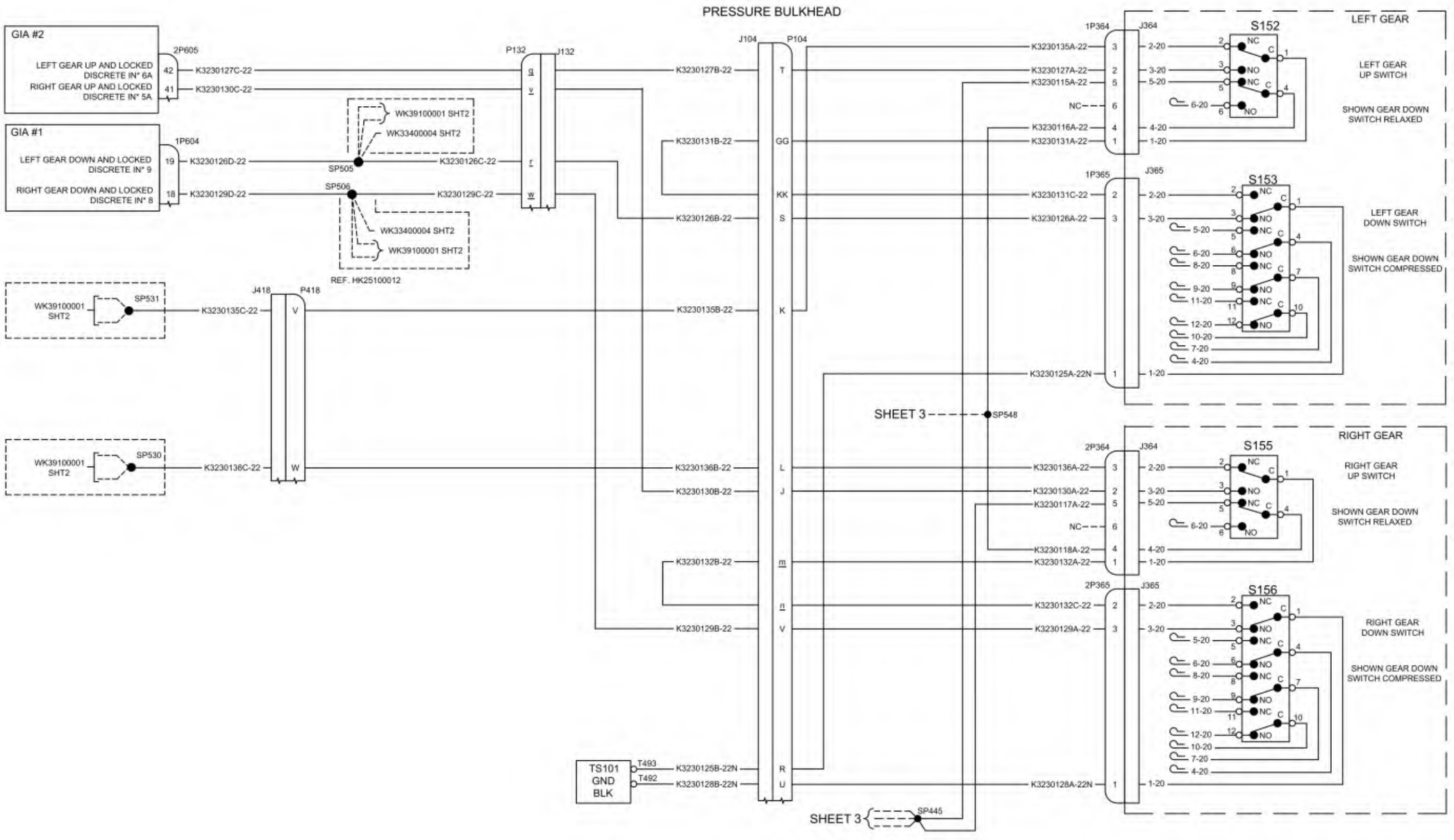

Figure 32-30.1: WK32300002-- (Sheet 2 of 3) Landing Gear and Hydraulic Pump (SN: K003-K010)

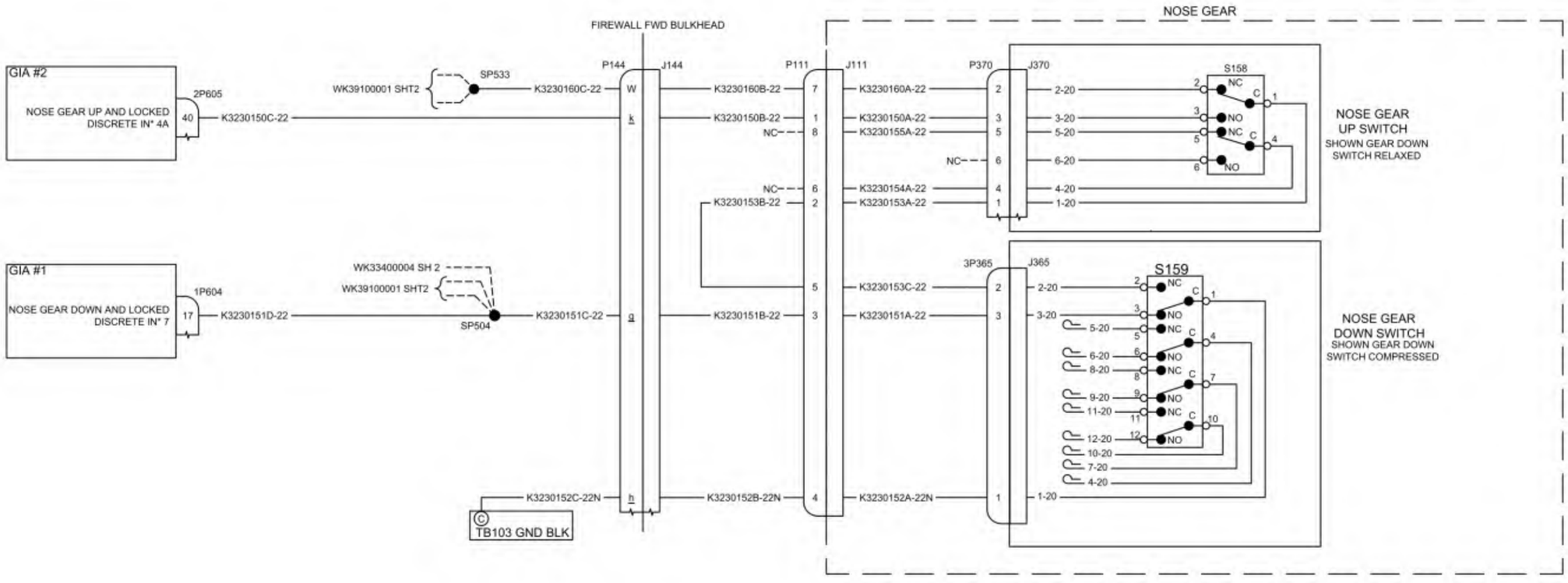

Figure 32-30.1: WK32300002-- (Sheet 3 of 3) Landing Gear and Hydraulic Pump (SN: K003-K010)

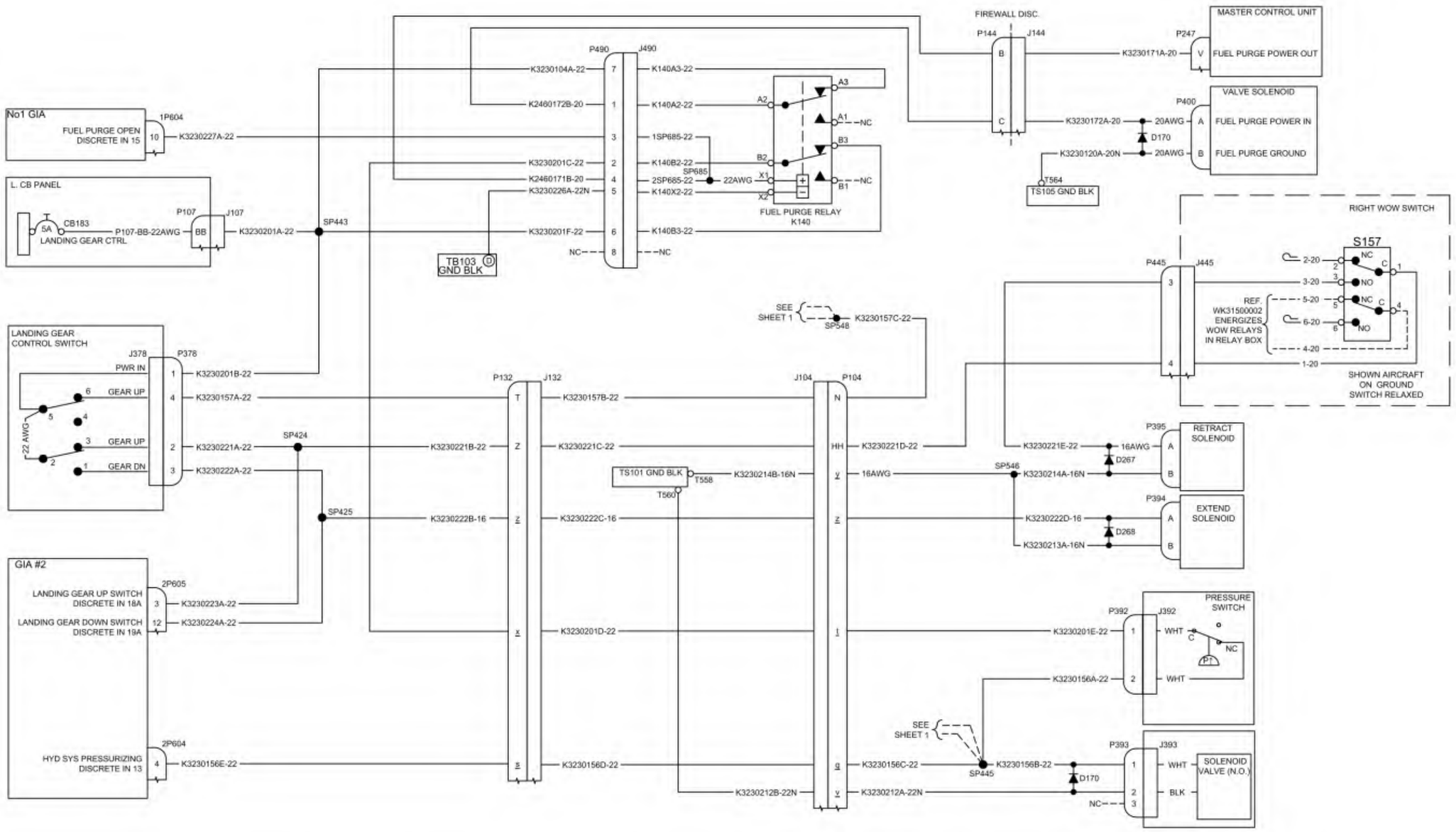

Figure 32-30.2: WK32302002A- (Sheet 1 of 3) Landing Gear and Hydraulic Pump (SN: K011 and On, and K003-K010 with SB-0017)

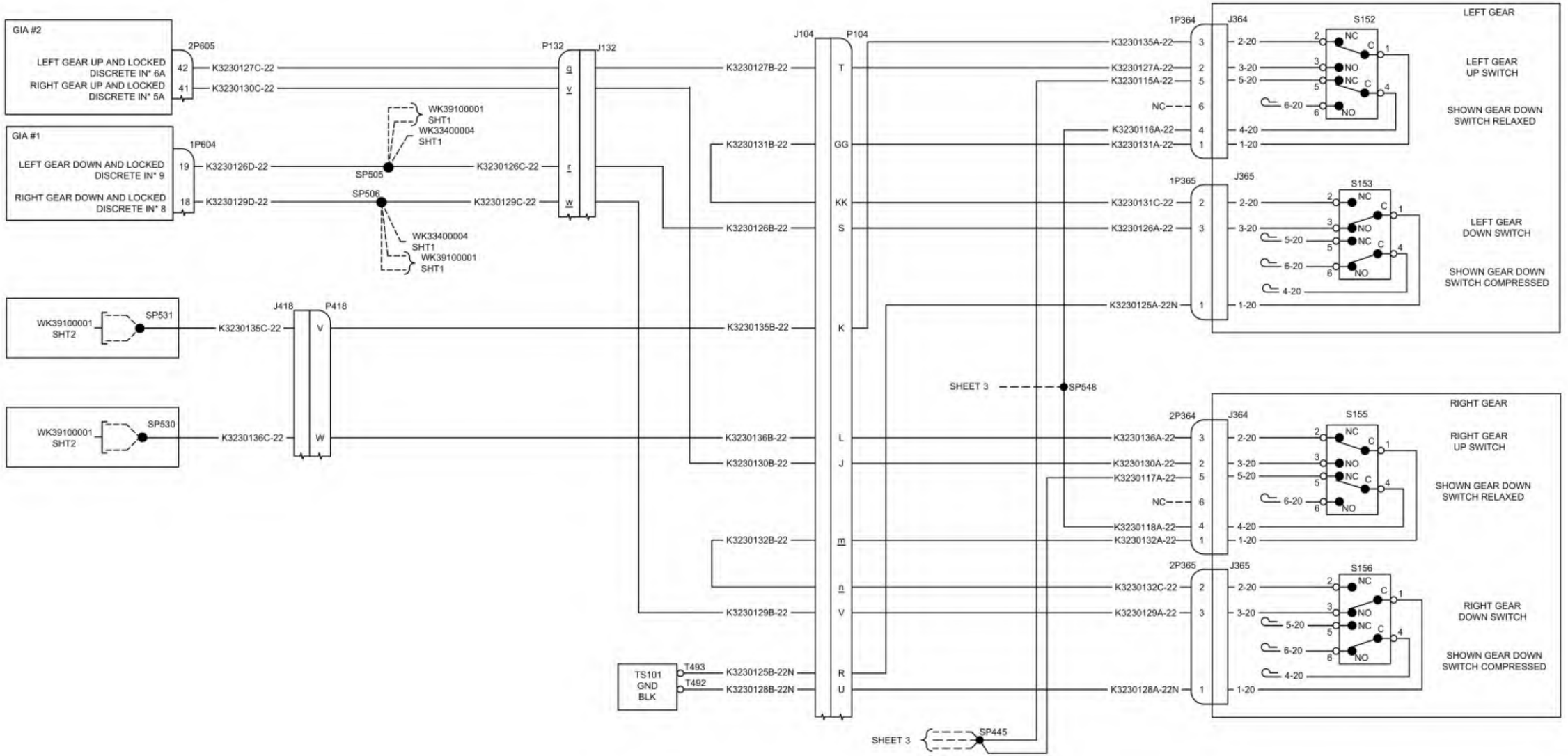

Figure 32-30.2: WK32302002A- (Sheet 2 of 3) Landing Gear and Hydraulic Pump (SN: K011 and On, and K003-K010 with SB-0017)

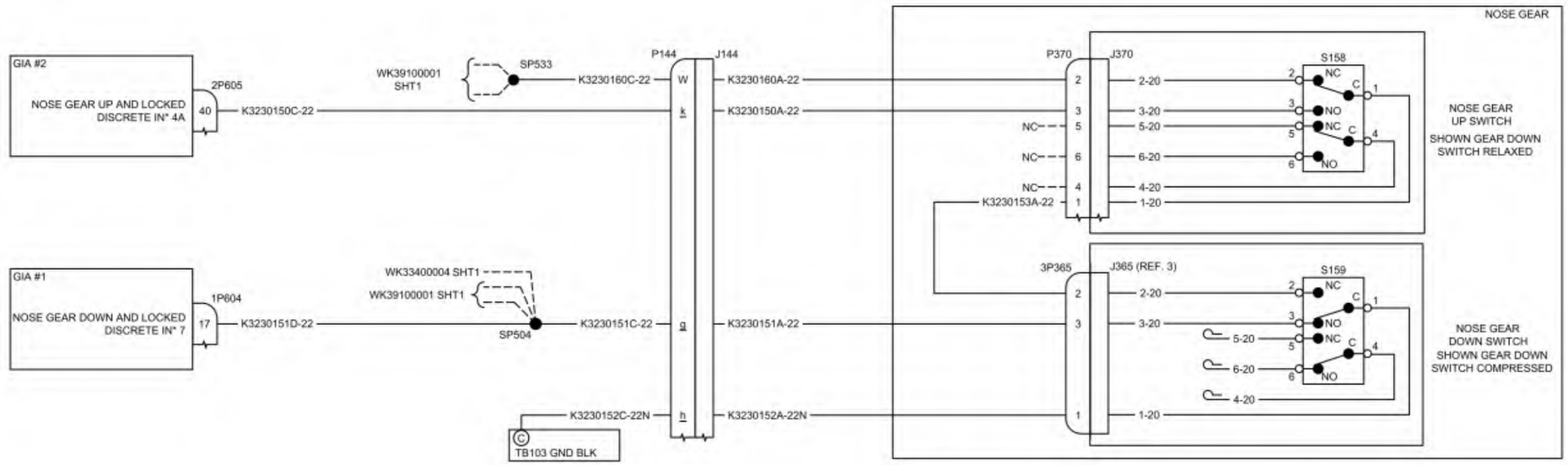

Figure 32-30.2: WK32302002A- (Sheet 3 of 3) Landing Gear and Hydraulic Pump (SN: K011 and On, and K003-K010 with SB-0017)

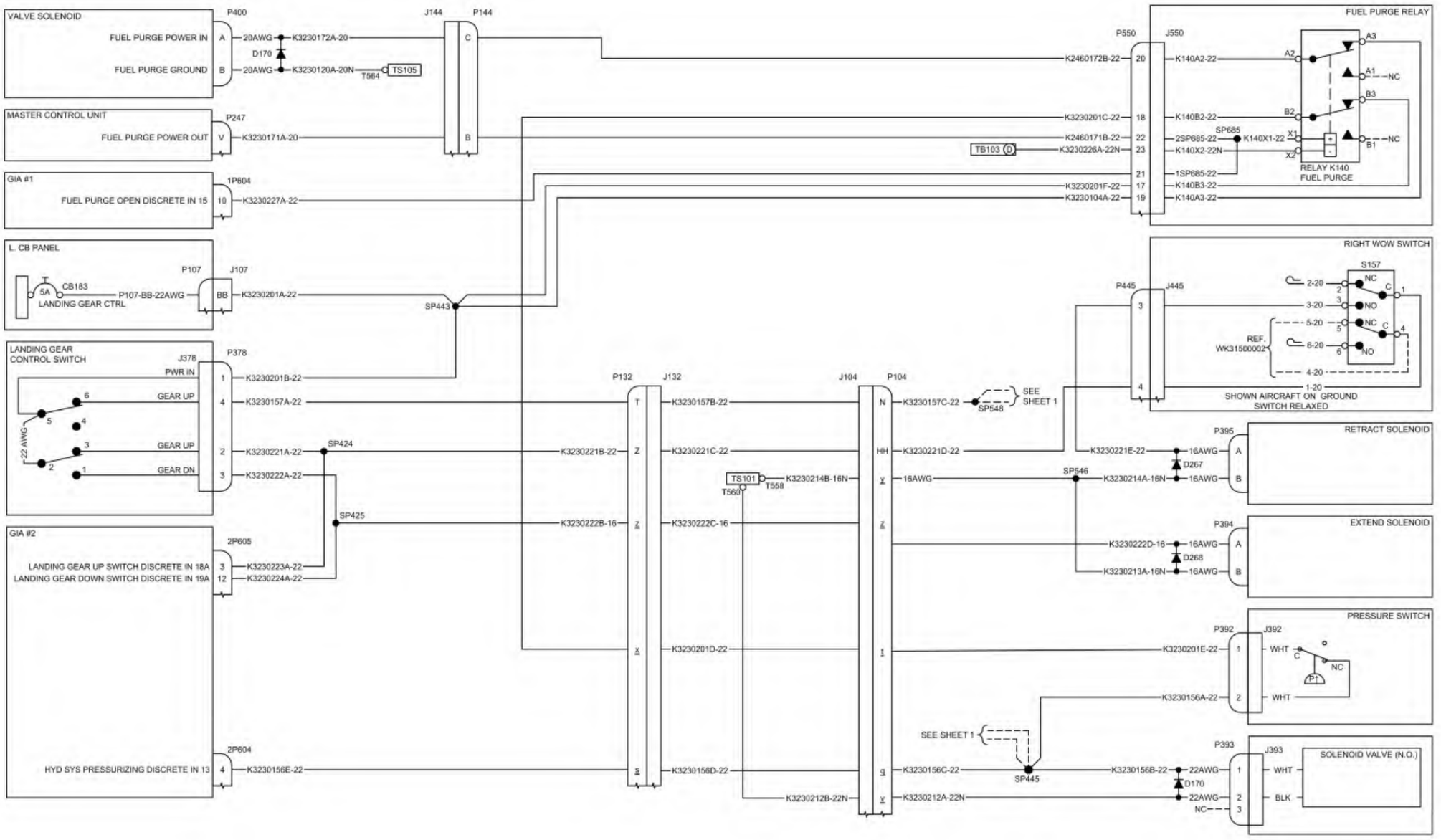

CHAPTER
33

Lights

This Page Intentionally Left Blank

List of Effective Pages

Chapter/Section	Page Number	Effective Date
33-Title	Page 1	02 Jan 2020
33-Title	Page 2	02 Jan 2020
33-LOEP	Page 1	14 July 2025
33-LOEP	Page 2	02 Jan 2020
33-TOC	Page 1	14 Jul 2021
33-TOC	Page 2	02 Jan 2020
33-00	Page 1	02 Jan 2020
33-00	Page 2	02 Jan 2020
33-20	Page 1	02 Jan 2020
33-20	Page 2	02 Jan 2020
33-30	Page 1	14 Jul 2021
33-30	Page 2	14 Jul 2021
33-40	Page 1	14 July 2025
33-40	Page 2	14 July 2025
33-40	Page 3	14 July 2025
33-40	Page 4	14 July 2025
33-40	Page 5	14 Jul 2021
33-40	Page 6	14 Jul 2021

This Page Intentionally Left Blank

CHAPTER 33

Table of Contents

List of Effective Pages ..... 33-LOEP / Page 1
Table of Contents ..... 33-TOC / Page1

Paragraph **Page Number**

Lights

1. General ..... 33-00 / Page 1

Interior

Figure 33-20.1: WK33200001 - - Cabin Lights (Sheet 1 of 2) ..... 33-20 / Page 1

Cargo Compartment

Figure 33-30.1: WK33300001 - - Reading Lights ..... 33-30 / Page 1

Exterior

Figure 33-40.1: WK33400001 - - Position and Landing Lights ..... 33-40 / Page 1
Figure 33-40.2: WK33400002 - - Taxi and Ice Lights ..... 33-40 / Page 2
Figure 33-40.3: WK33400003 - - Instrument Panel Lighting (SN: K003-K010) ..... 33-40 / Page 3
Figure 33-40.4: WK33402003 - - Instrument Panel Lighting (SN: K011 and On, and K003-K010 with SB-0017) ..... 33-40 / Page 4
Figure 33-40.5: WK33400004 - - Lamp Test Switches ..... 33-40 / Page 5

This Page Intentionally Left Blank

LIGHTS

1. General

All lights on this airplane are light emitting diodes (LED).

Exterior lighting is landing, taxi, wing tip, ice, and rudder position/strobe lights. A light (called the Ice Light) mounted in the cowling can be turned on to shine on the wing leading edge giving visual verification that the de-ice system is working.

Interior lighting is instrument panel, circuit breaker panel, flood, cabin, cockpit, and emergency lights.

WARNING: Never do maintenance on interior or exterior lighting systems without verifying the BATT 1 and BATT 2 switches are OFF. Remove any external electrical power to the airplane (refer to Chapter 24-40). Pull the associated lighting circuit breaker before doing maintenance on the lighting system.

Note: LED's are polarity sensitive and must be installed in the correct configuration for correct operation. Failure to do so will render the LED inoperative.

This Page Intentionally Left Blank

Figure 33-20.1: WK33200001-1 Cabin Lights (Sheet 1 of 2)

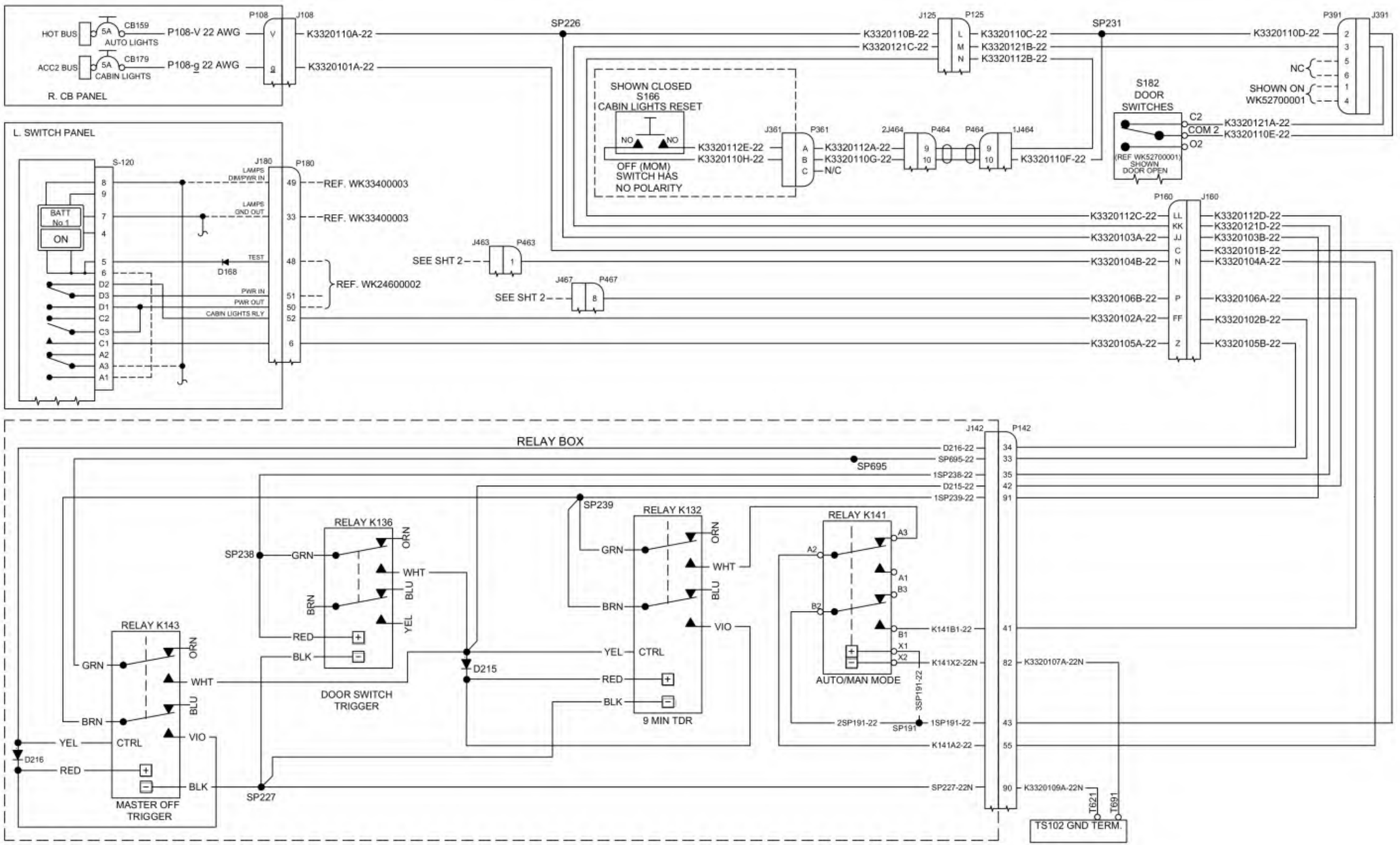

Figure 33-20.1: WK33200001-1 Cabin Lights (Sheet 2 of 2))

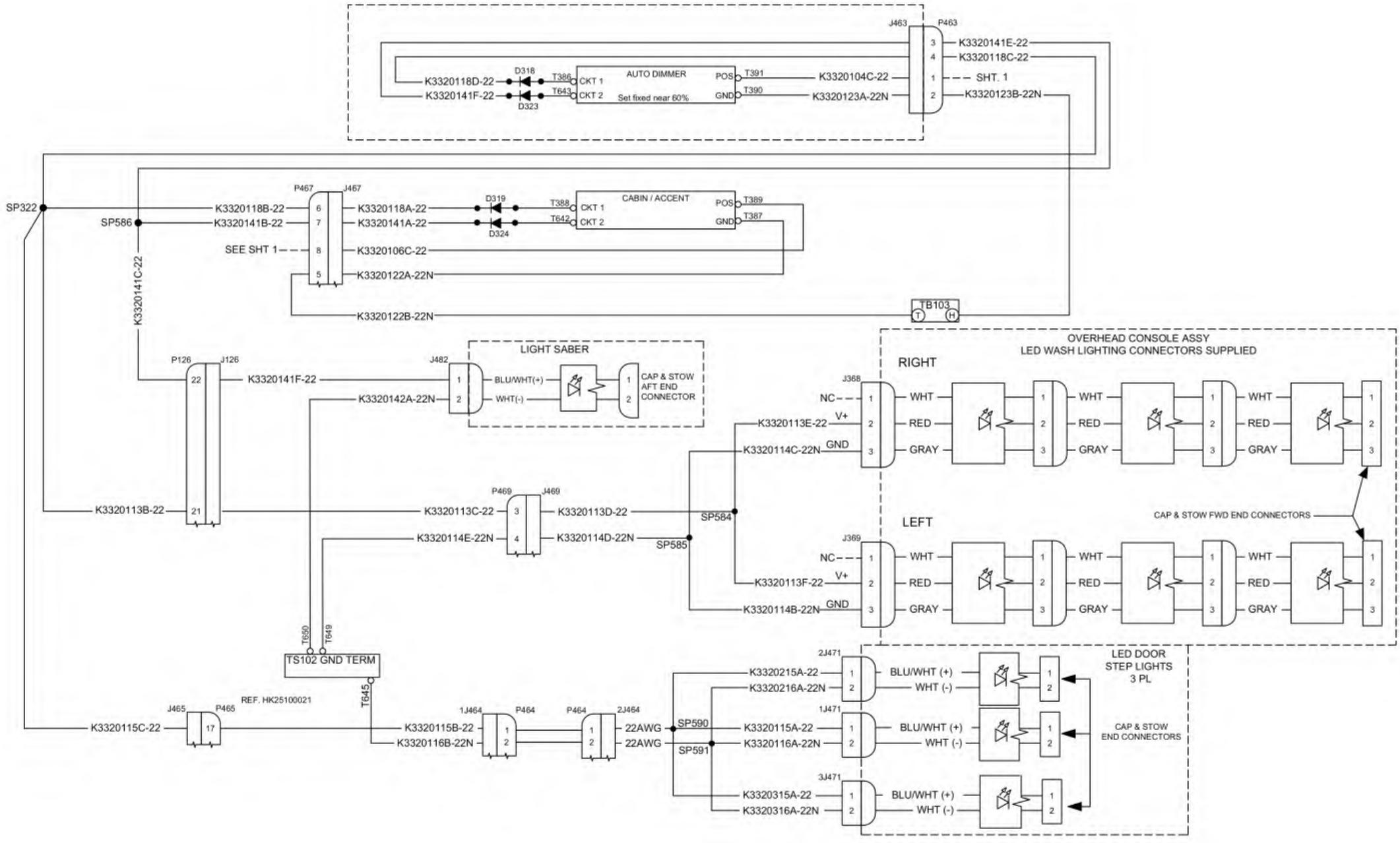

Figure 33-30.1: WK33300001-2 Reading Lights

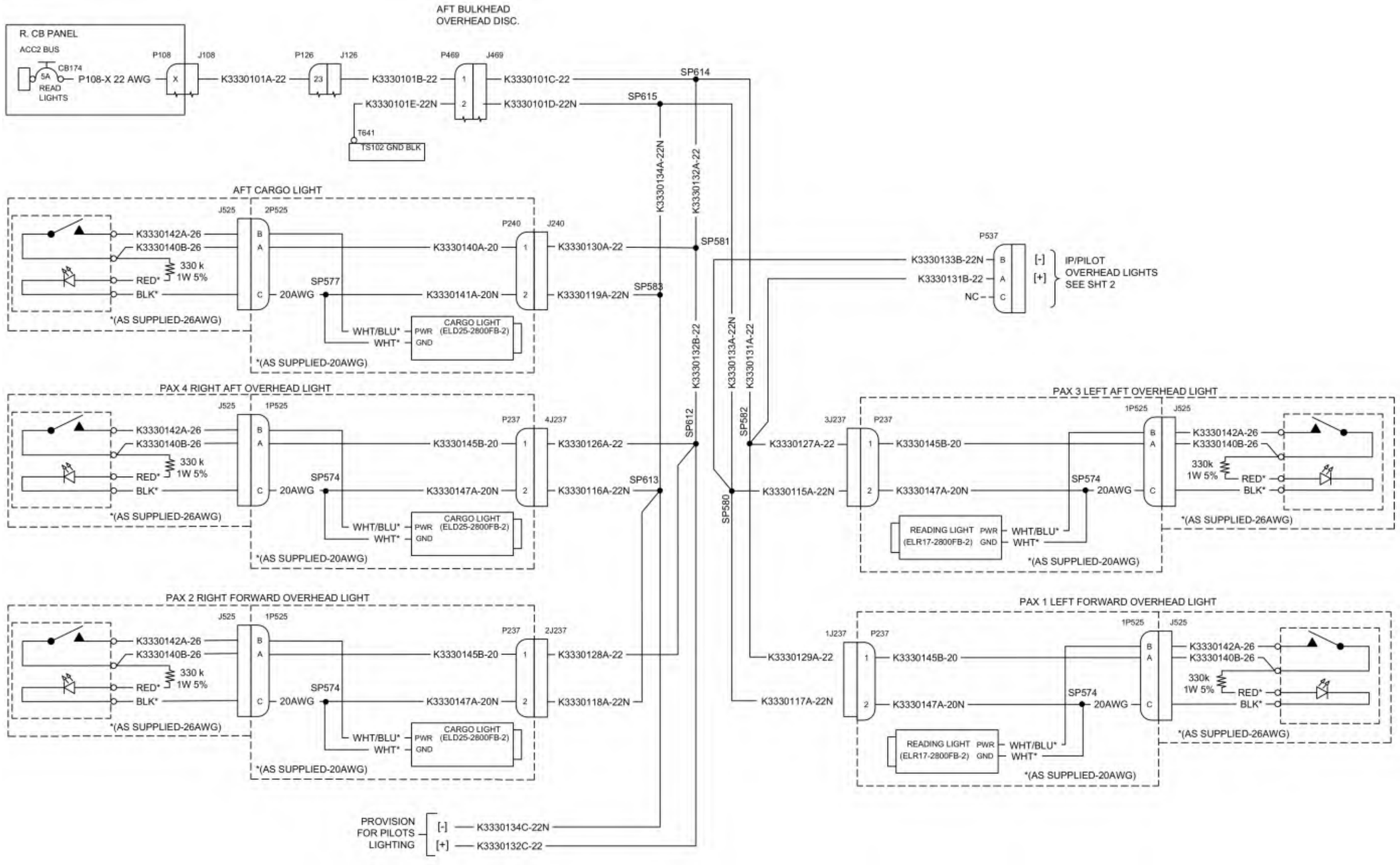

Figure 33-30.1: WK33300001-2 Reading Lights (Continued)

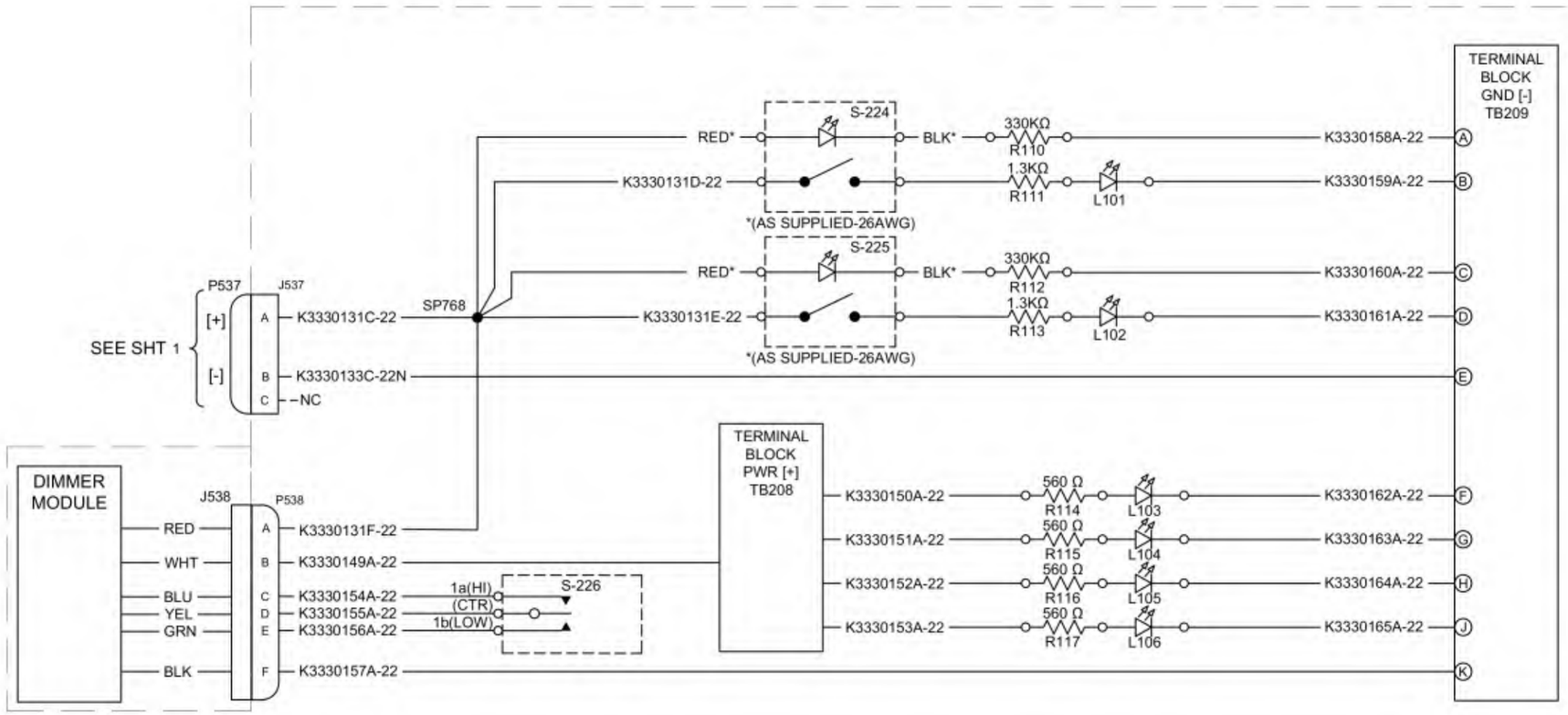

Figure 33-40.1: WK3340000A- Position and Landing Lights

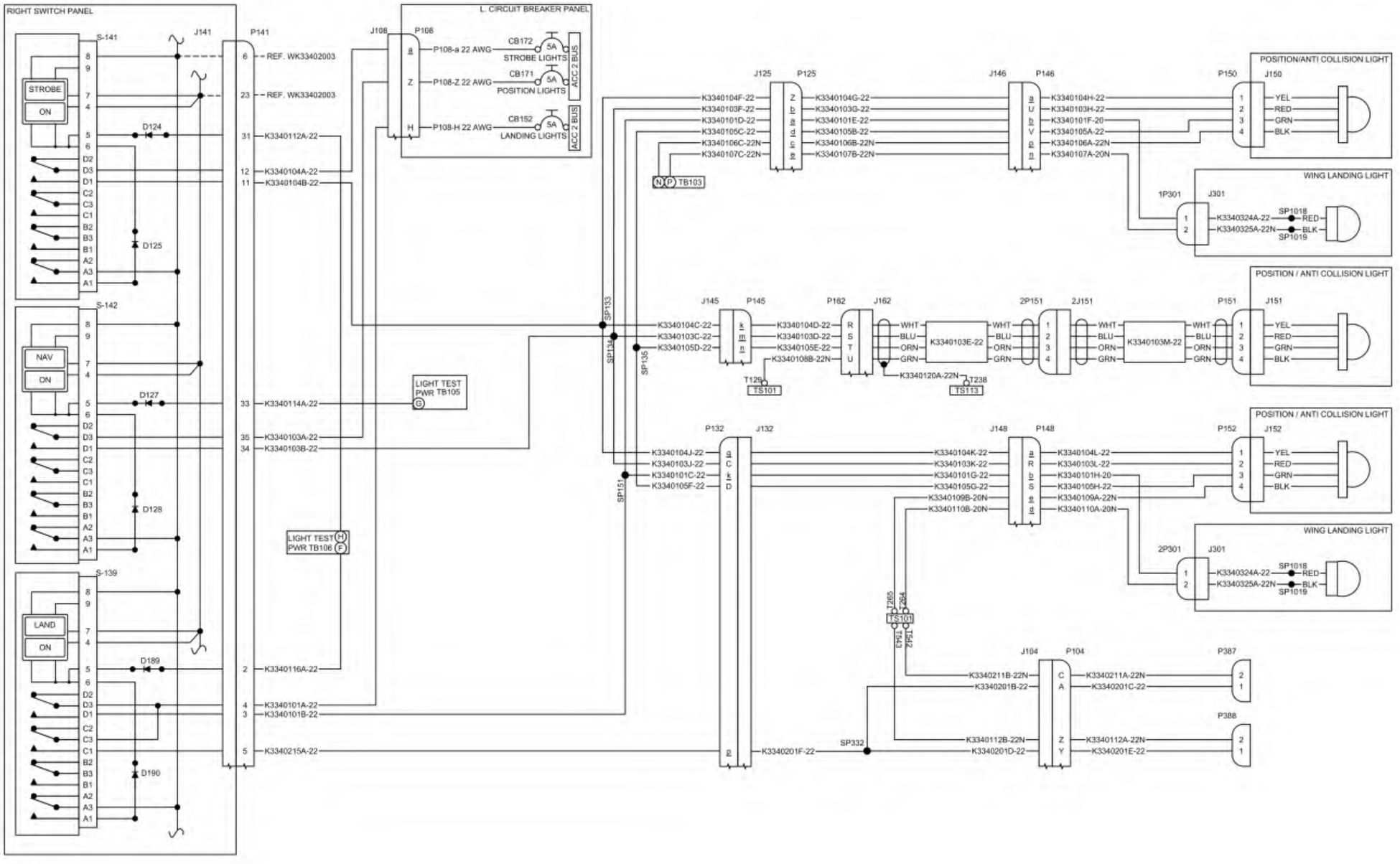

Figure 33-40.2: WK33400002B- Taxi and Ice Lights

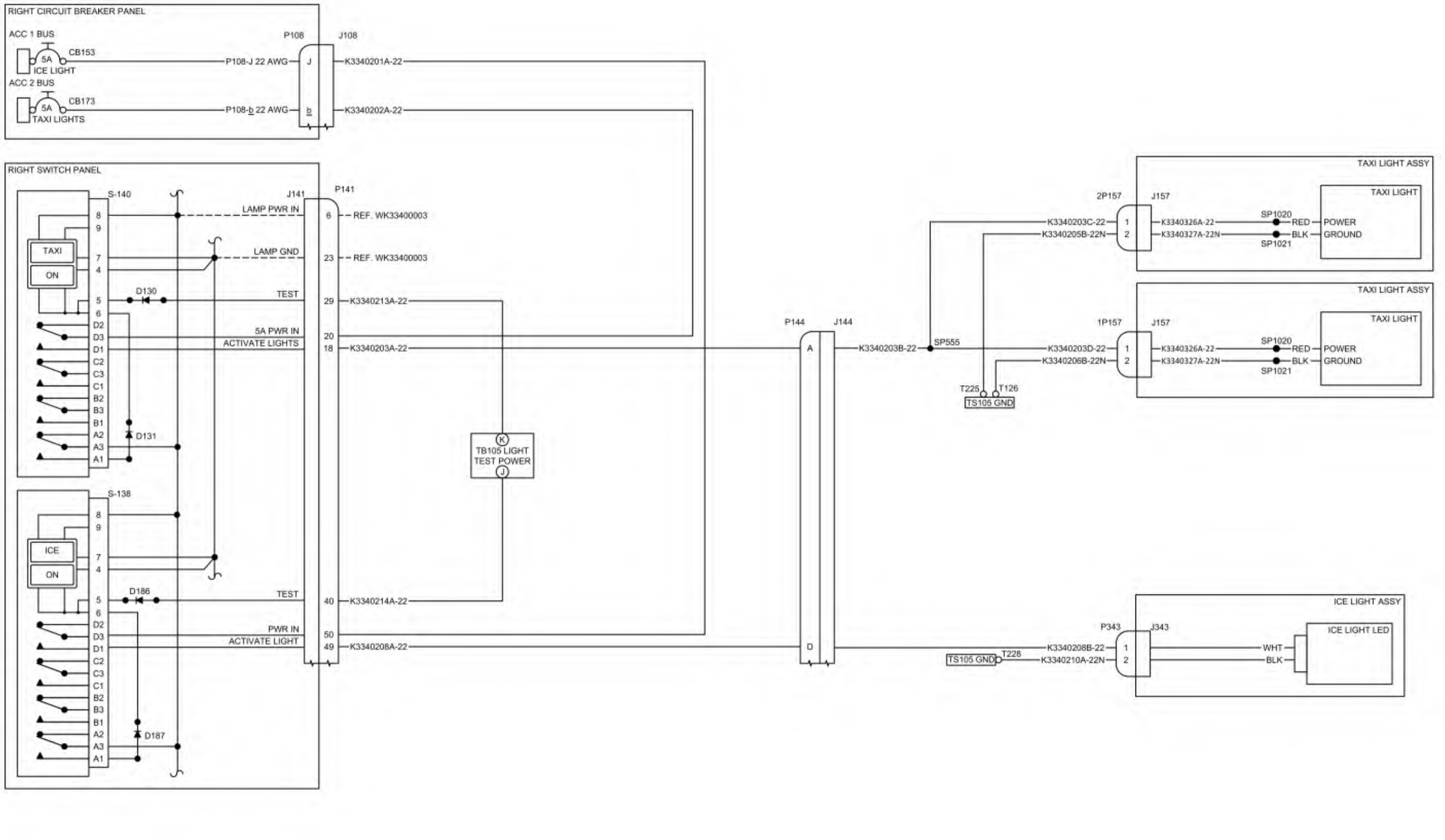

Figure 33-40.3: WK33400003-1 Instrument Panel Lighting (SN: K003-K010)

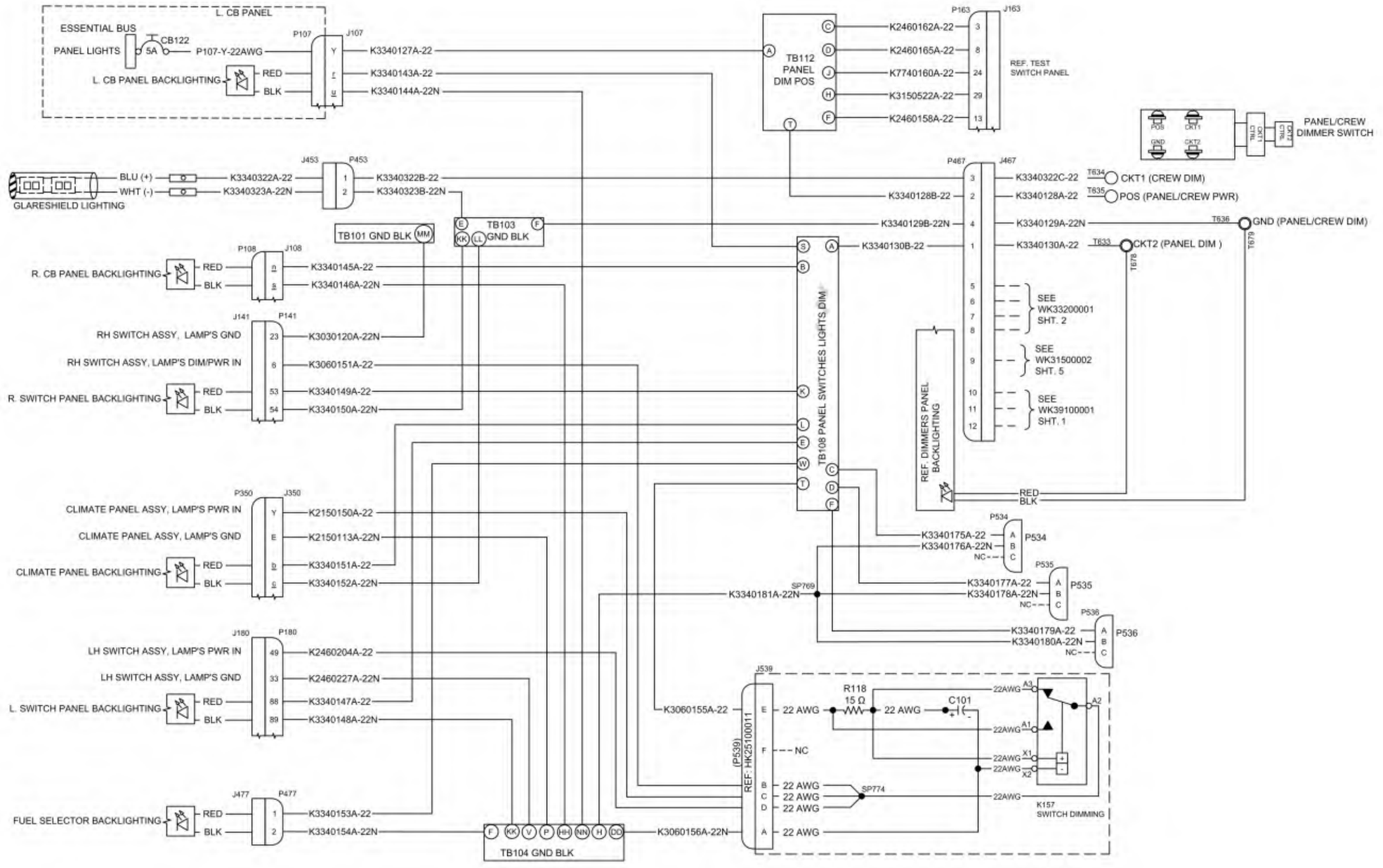

Figure 33-40.4: WK33402003-1 Instrument Panel Lighting (SN: K011 and On, and K003-K010 with SB-0017)

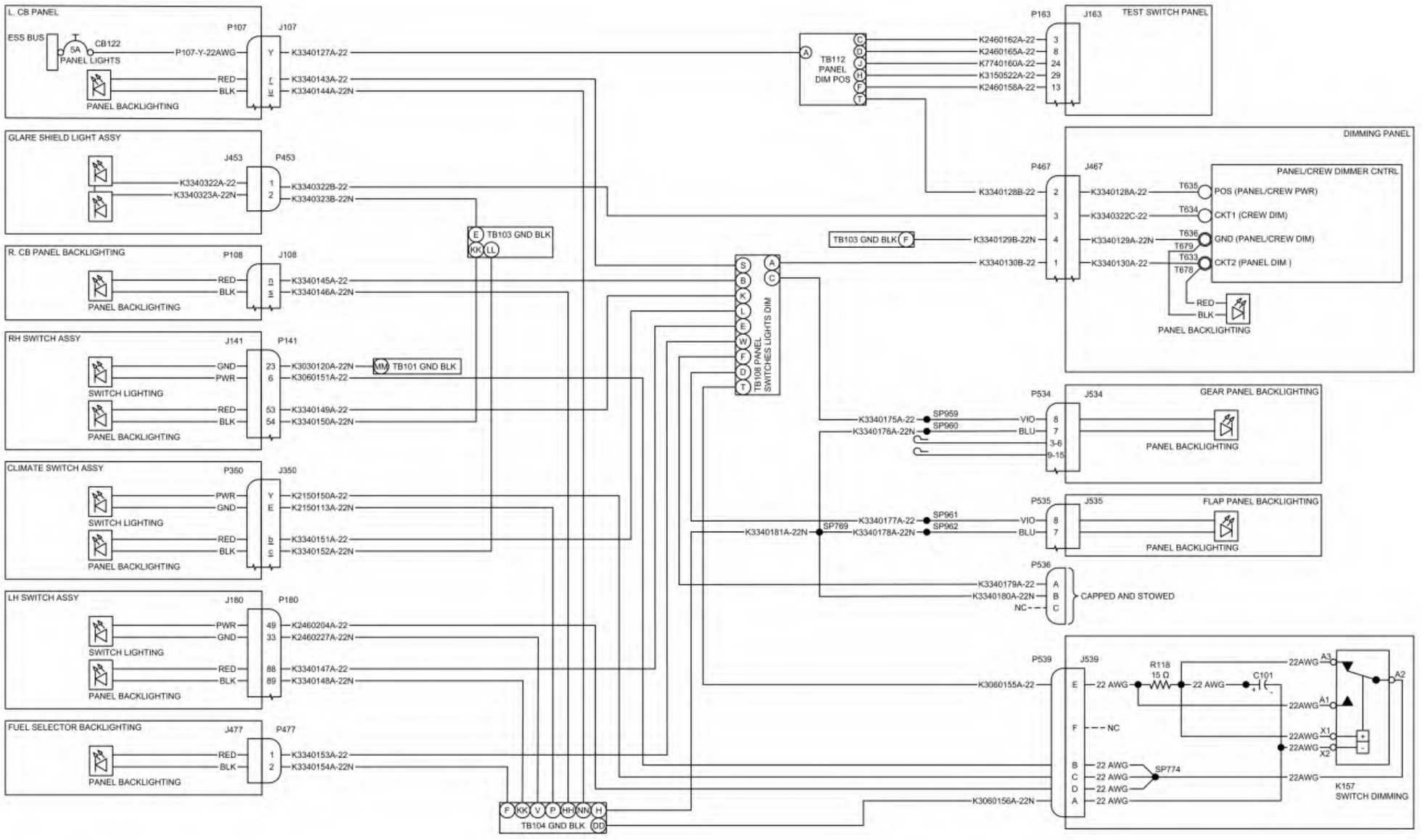

Figure 33-40.5: WK33400004-1 Lamp Test Switches

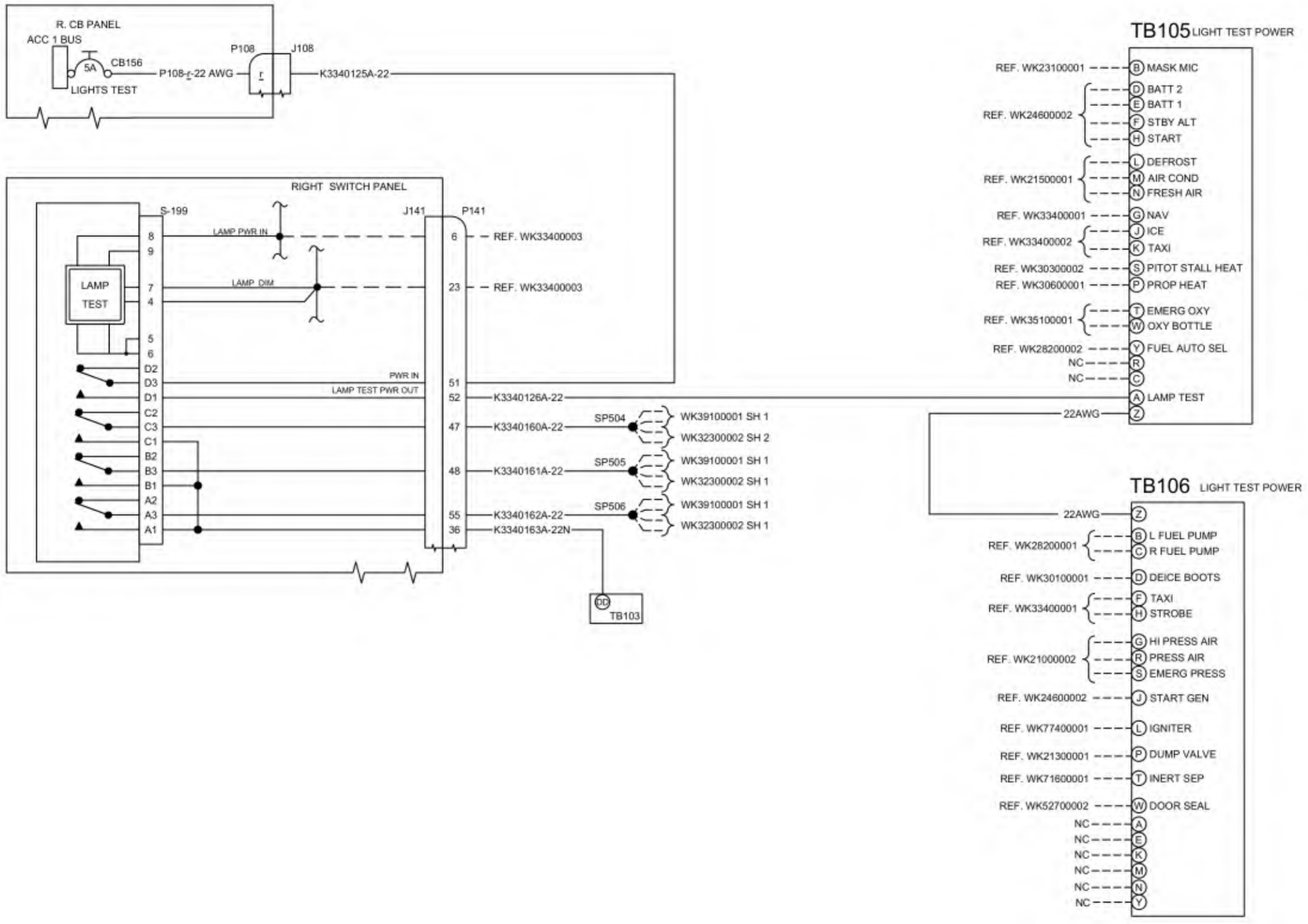

This Page Intentionally Left Blank

CHAPTER 34

Navigation

This Page Intentionally Left Blank

List of Effective Pages

Chapter/Section	Page Number	Effective Date
34-Title	Page 1	02 Jan 2020
34-Title	Page 2	02 Jan 2020
34-LOEP	Page 1	14 Jul 2021
34-LOEP	Page 2	02 Jan 2020
34-TOC	Page 1	14 Jul 2021,
34-TOC	Page 2	02 Jan 2020
34-00	Page 1	02 Jan 2020
34-00	Page 2	02 Jan 2020
34-10	Page 1	14 Jul 2021
34-10	Page 2	14 Jul 2021
34-10	Page 3	14 Jul 2021
34-10	Page 4	14 Jul 2021
34-10	Page 5	14 Jul 2021
34-10	Page 6	14 Jul 2021
34-10	Page 7	14 Jul 2021
34-10	Page 8	14 Jul 2021
34-20	Page 1	02 Jan 2020
34-20	Page 2	14 July 2025
34-40	Page 1	02 Jan 2020
34-40	Page 2	14 July 2025
34-50	Page 1	14 Jul 2021
34-50	Page 2	14 Jul 2021
34-50	Page 3	14 Jul 2021
34-50	Page 4	14 Jul 2021

This Page Intentionally Left Blank

CHAPTER 34

Table of Contents

List of Effective Pages ..... 34-LOEP / Page 1
Table of Contents ..... 34-TOC / Page1

Paragraph **Page Number**

Navigation

1. General ..... 34-00 / Page 1

Flight Environment Data

Figure 34-10.1: WK34100001-- (Sheet 1 of 2) ADAHRS GSU 75 1 and 2 (SN: K003-K010) 34-10 / Page 1
Figure 34-10.2: WK34102001-- (Sheet 1 of 2) ADAHRS GSU 75 1 and 2 (SN: K011 and On, and K003-K010 with SB-0017) ..... 34-10 / Page 3
Figure 34-10.3: WK34100002-- PFD 1 and 2 and MFD (Sheet 1 of 3) ..... 34-10 / Page 5
Figure 34-10.4: WK34100003-- NAV/COM/GPS ..... 34-10 / Page 8

Attitude and Direction

Figure 34-20.1: WK34200001-- Standby Instrument System - L3 ESI-500 ..... 34-20 / Page 1
Figure 34-20.2: *WK34200001B- Standby Instrument System - Garmin GI-275 ..... 34-20 / Page 2

Independent Position Determining

Figure 34-40.1: WK34400001 - - Weather Radar ..... 34-40 / Page 1
Figure 34-40.2: WK34400001 -1 Weather Radar (optional) ..... 34-40 / Page 2

Dependent Position Determining

Figure 34-50.1: WK34500001-- (Sheet 1 of 2) Transponder and TAS (SN: K003-K010)34-50 / Page 1
Figure 34-50.2: WK34502001-- (Sheet 1 of 2) Transponder and TAS (SN: K011 and On, and K003-K010 with SB-0017) ..... 34-50 / Page 3

*(STC# SA02658SE Only)

This Page Intentionally Left Blank

NAVIGATION

1. General

This airplane has a Garmin G1000 NXi avionics suite designed to integrate pilot/aircraft interaction into one central system. The system combines primary flight instrumentation, aircraft systems instrumentation, and navigational information which are all displayed on three large color displays.

Components of the system include:

1) Two independent Primary Flight Displays.
2) One Multifunction Flight Display.
3) Dual NAV/COM radios.
4) Two transponders.
5) Two independent air data computers.
6) Two independent Attitude and Heading Reference Systems (AHRS)
7) Two independent pitot/static systems.
8) Dual lift detectors in a stall warning and prevention system.
9) A backup attitude, airspeed, altitude, and slip indicator with independent emergency battery power.

The system receives and interprets data using Line Replaceable Units (LRUs) which have a modular design for easier inspection and replacement.

This Page Intentionally Left Blank

Figure 34-10.1: WK34100001-- (Sheet 1 of 2) ADAHRS GSU 75 1 and 2 (SN: K003-K010)

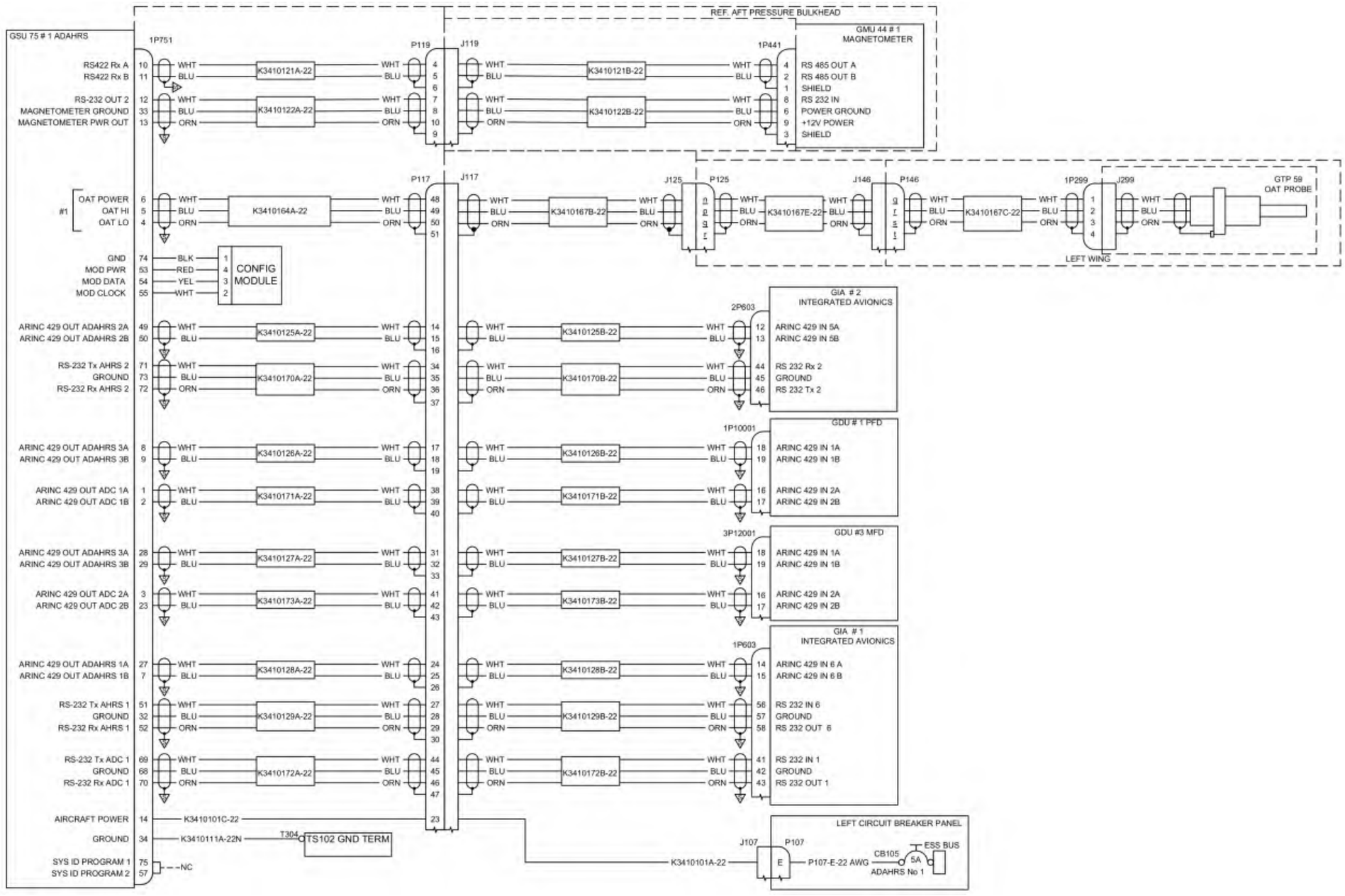

Figure 34-10.1: WK34100001-- (Sheet 1 of 2) ADAHRS GSU 75 1 and 2 (SN: K003-K010)

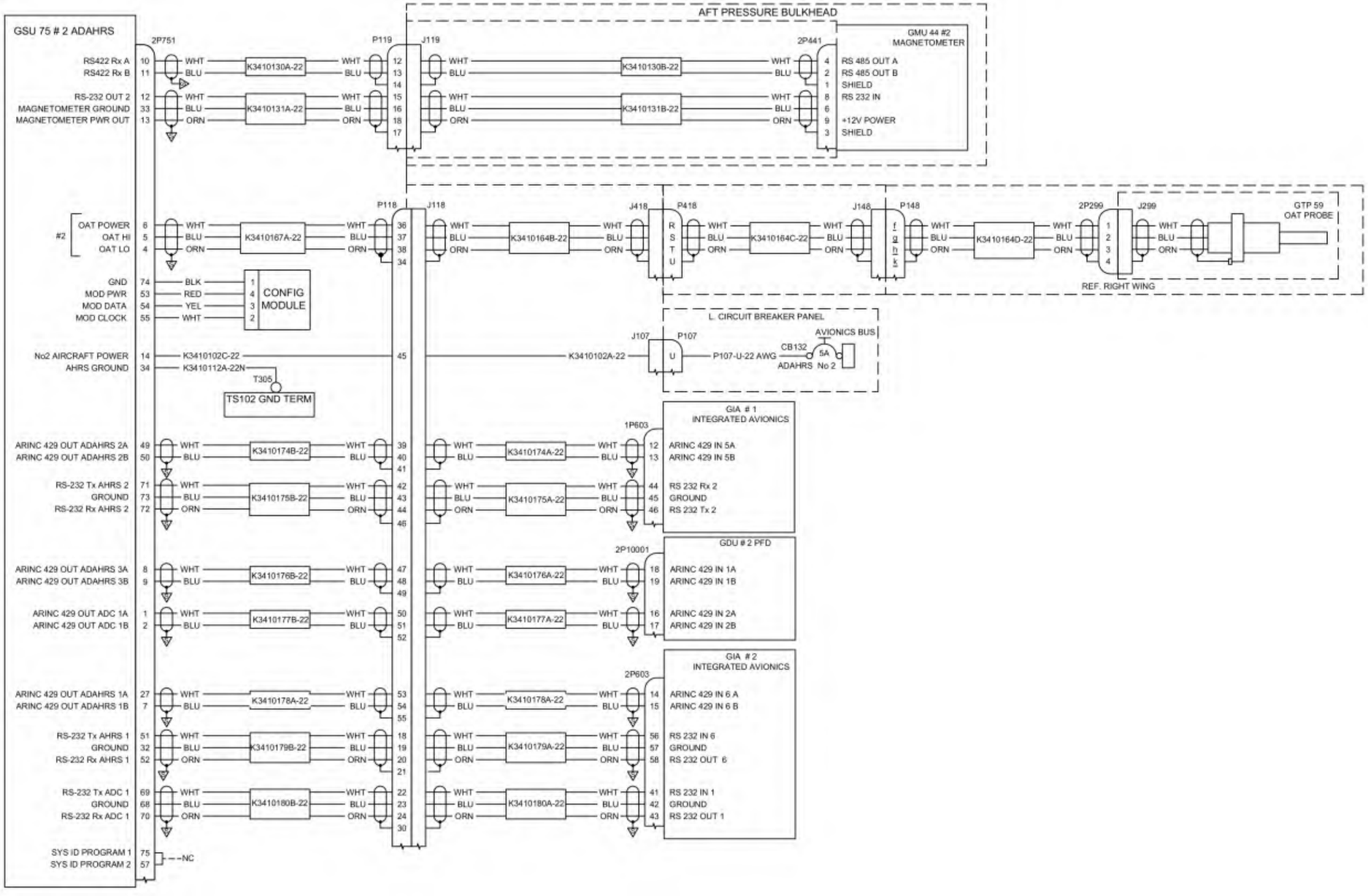

Figure 34-10.2: WK34102001-- (Sheet 1 of 2) ADAHRS GSU 75 1 and 2 (SN: K011 and On, and K003-K010 with SB-0017)

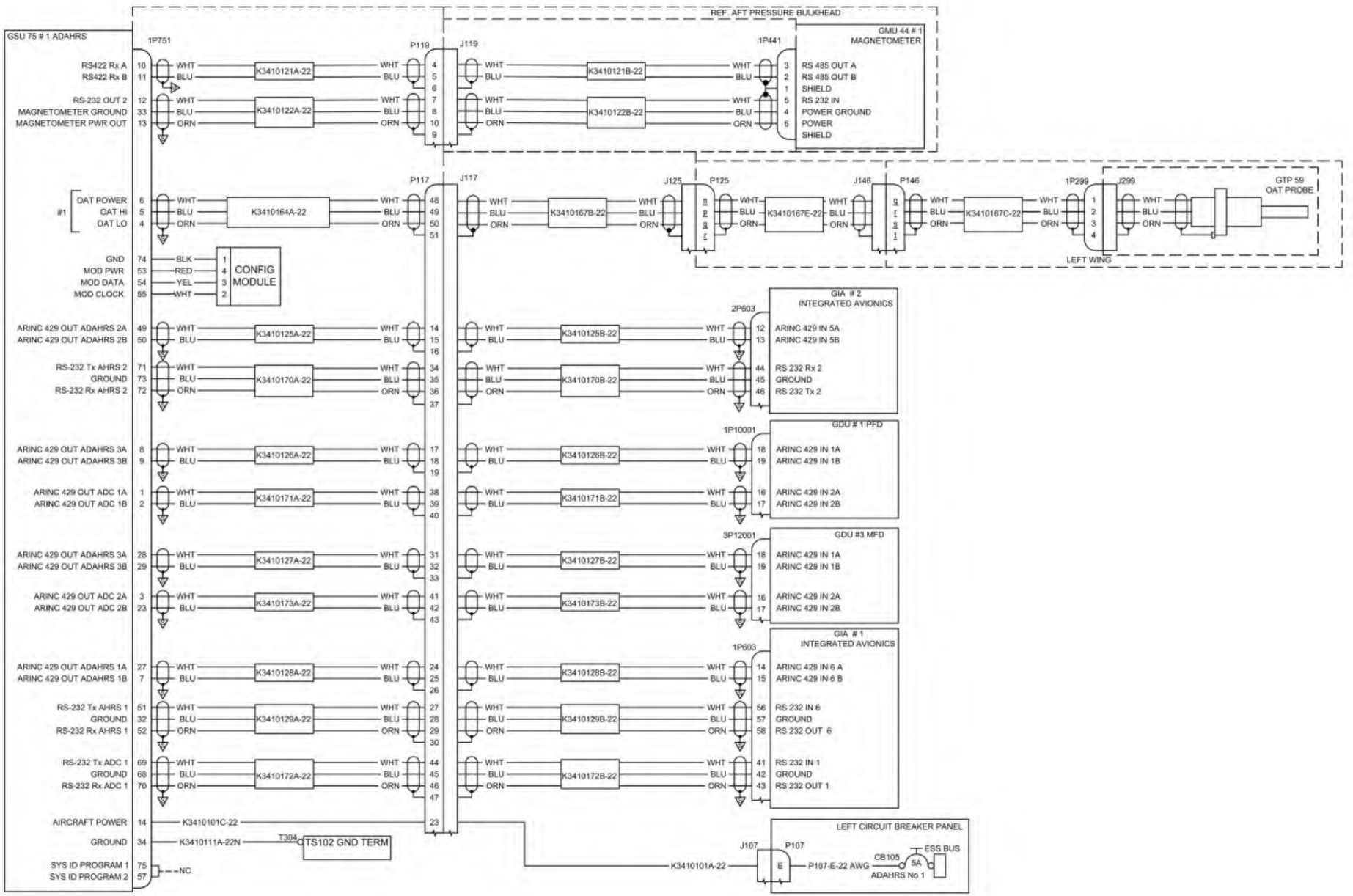

Figure 34-10.2: WK34102001-- (Sheet 2 of 2) ADAHRS GSU 75 1 and 2 (SN: K011 and On, and K003-K010 with SB-0017)

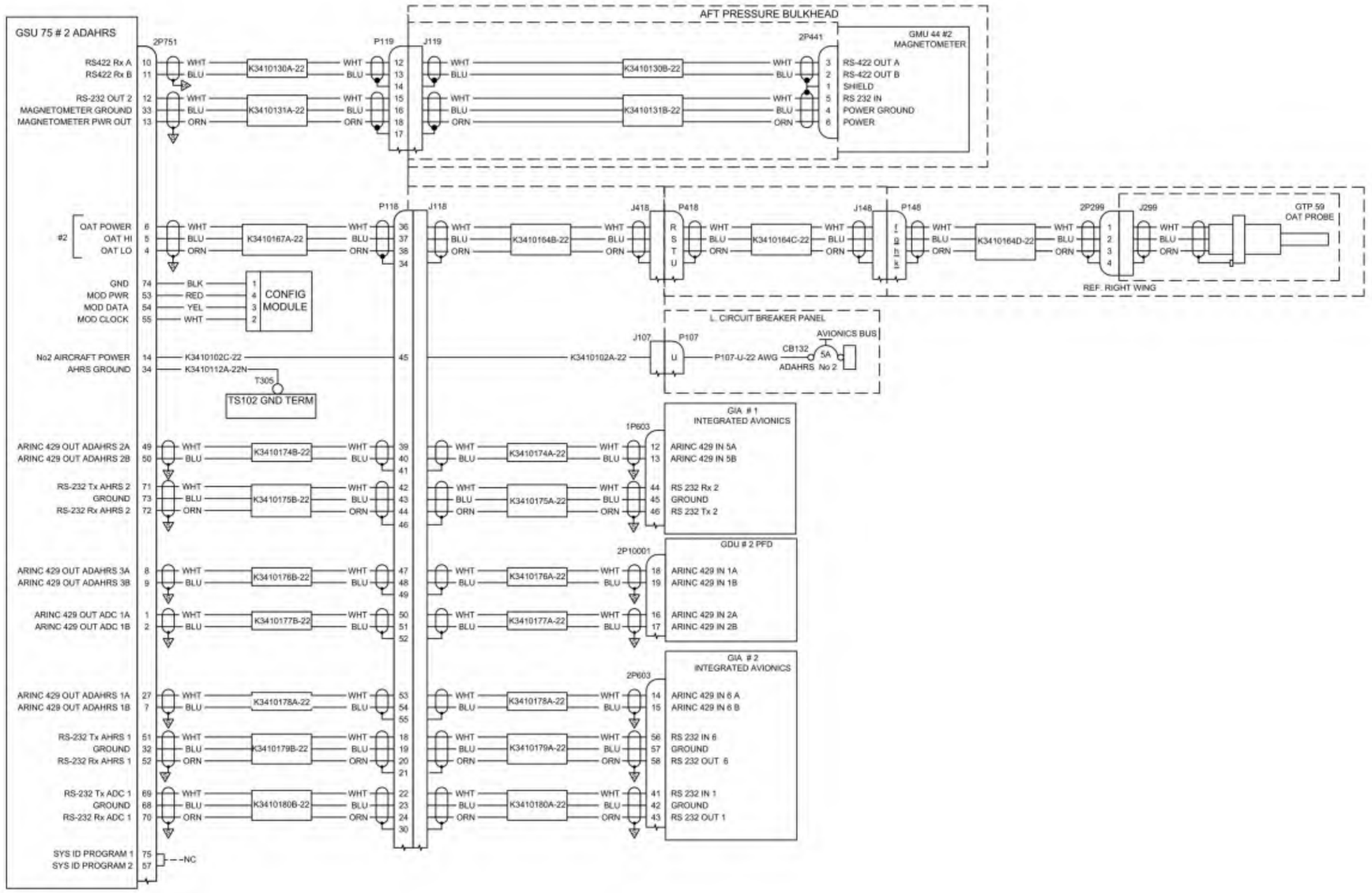

Figure 34-10.3: WK34100002-- PFD 1 and 2 and MFD (Sheet 1 of 3)

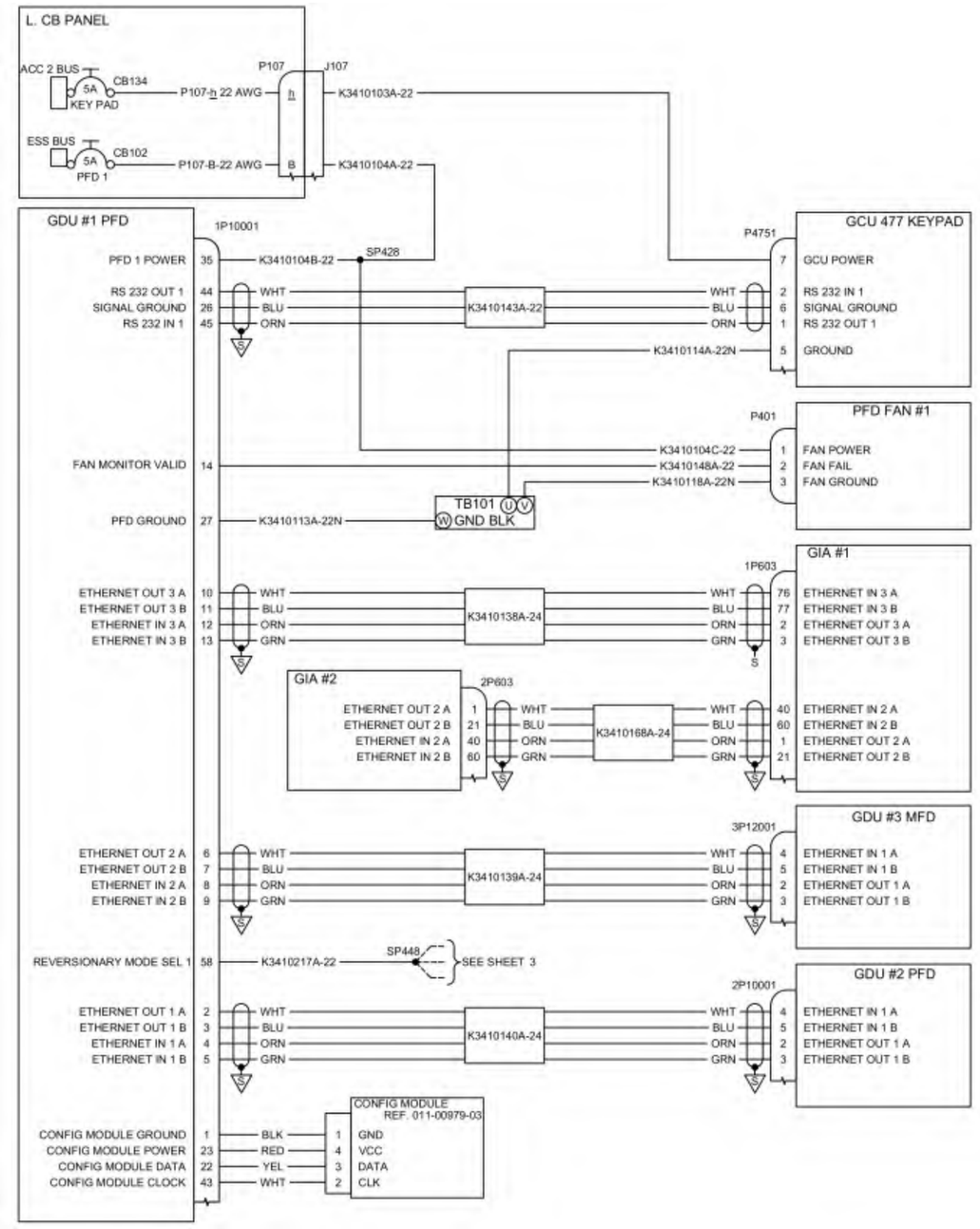

Figure 34-10.3: WK34100002-- PFD 1 and 2 and MFD (Sheet 2 of 3)

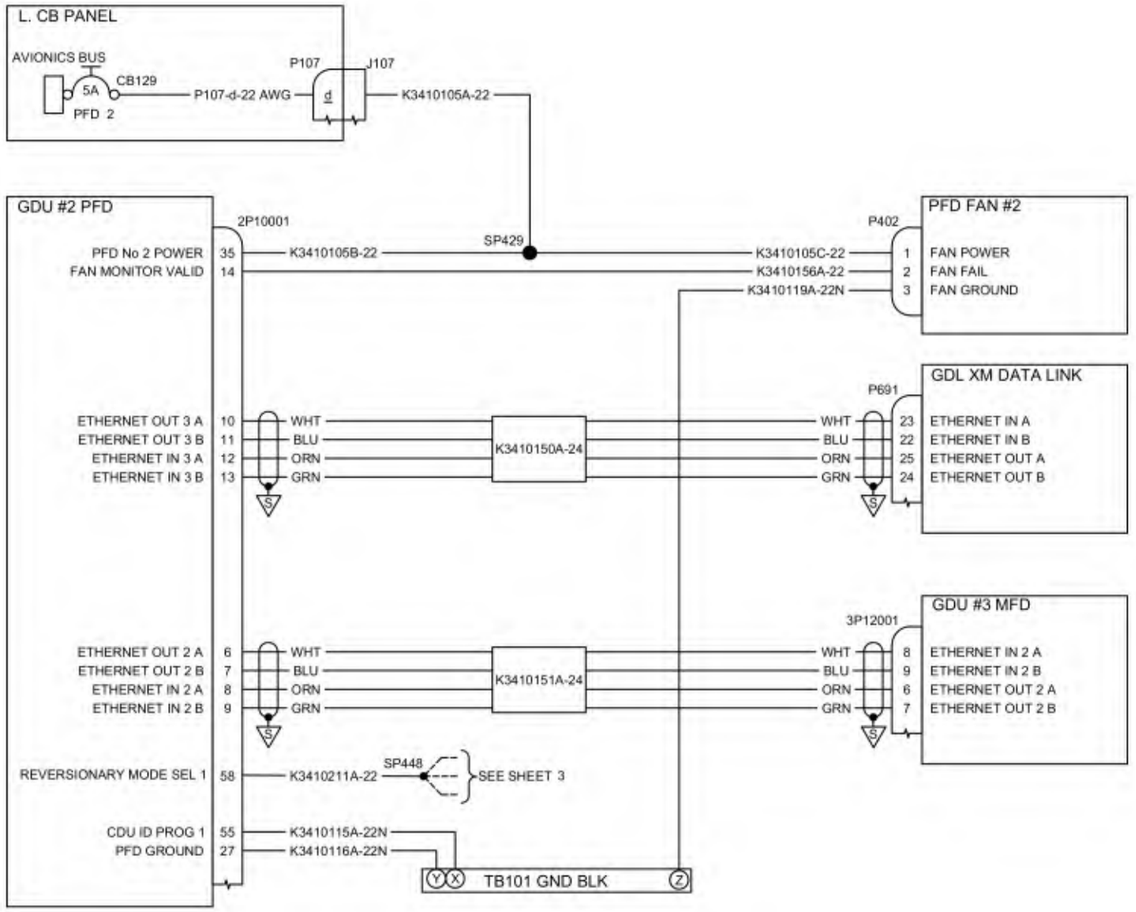

Figure 34-10.3: WK34100002-- PFD 1 and 2 and MFD (Sheet 3 of 3)

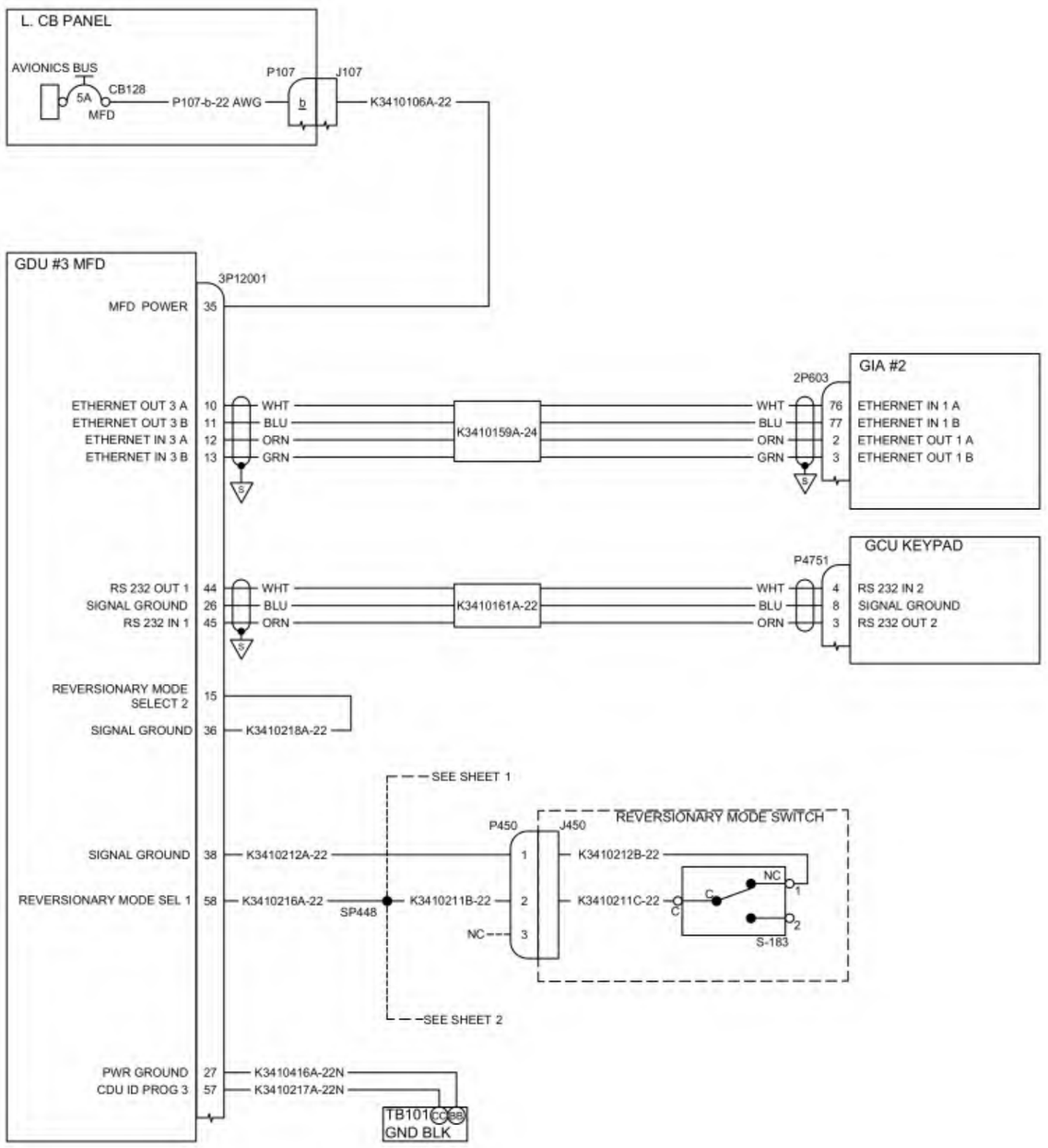

Figure 34-10.4: WK34100003-- NAV/COM/GPS

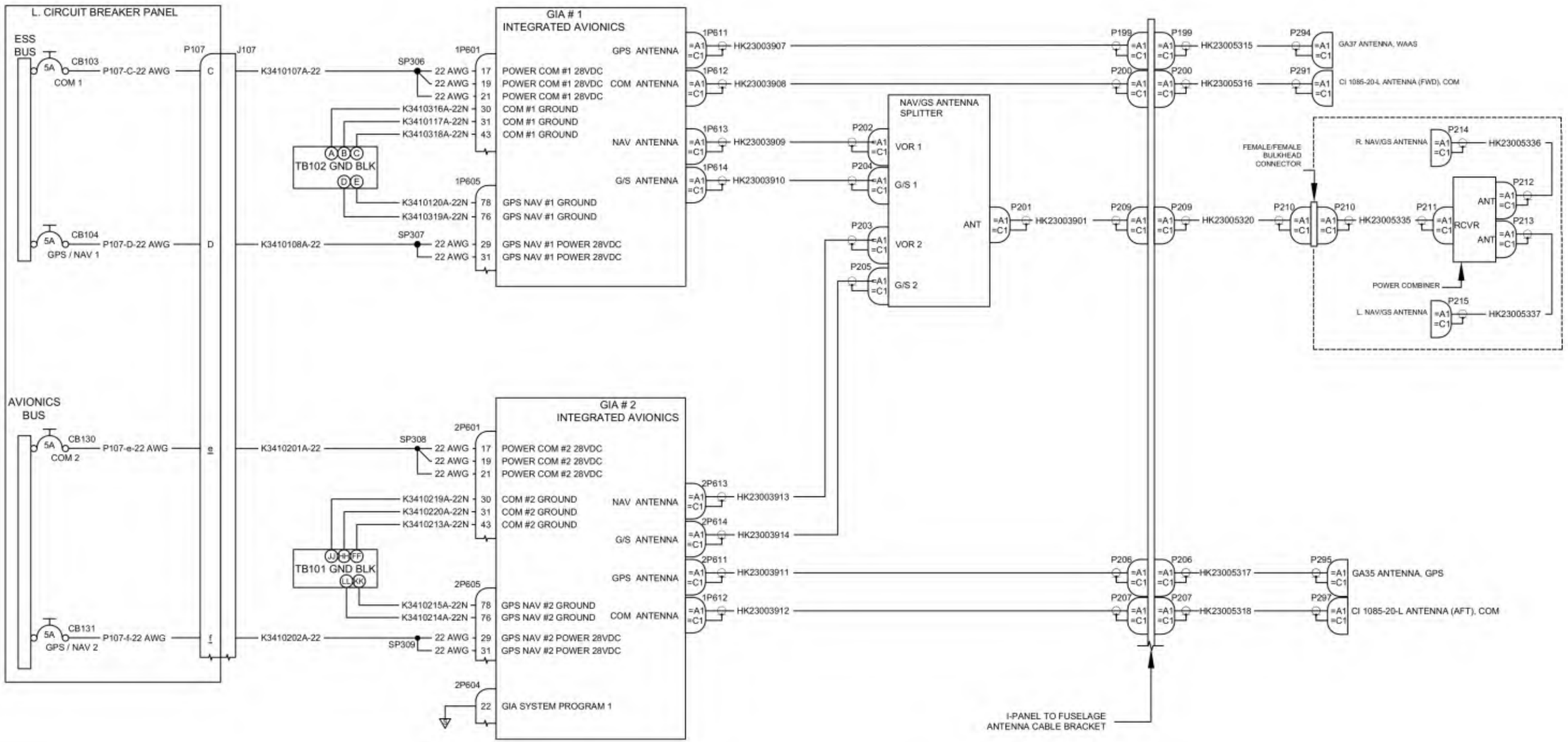

Figure 34-20.1: WK34200001-- Standby Instrument System - L3 ESI-500

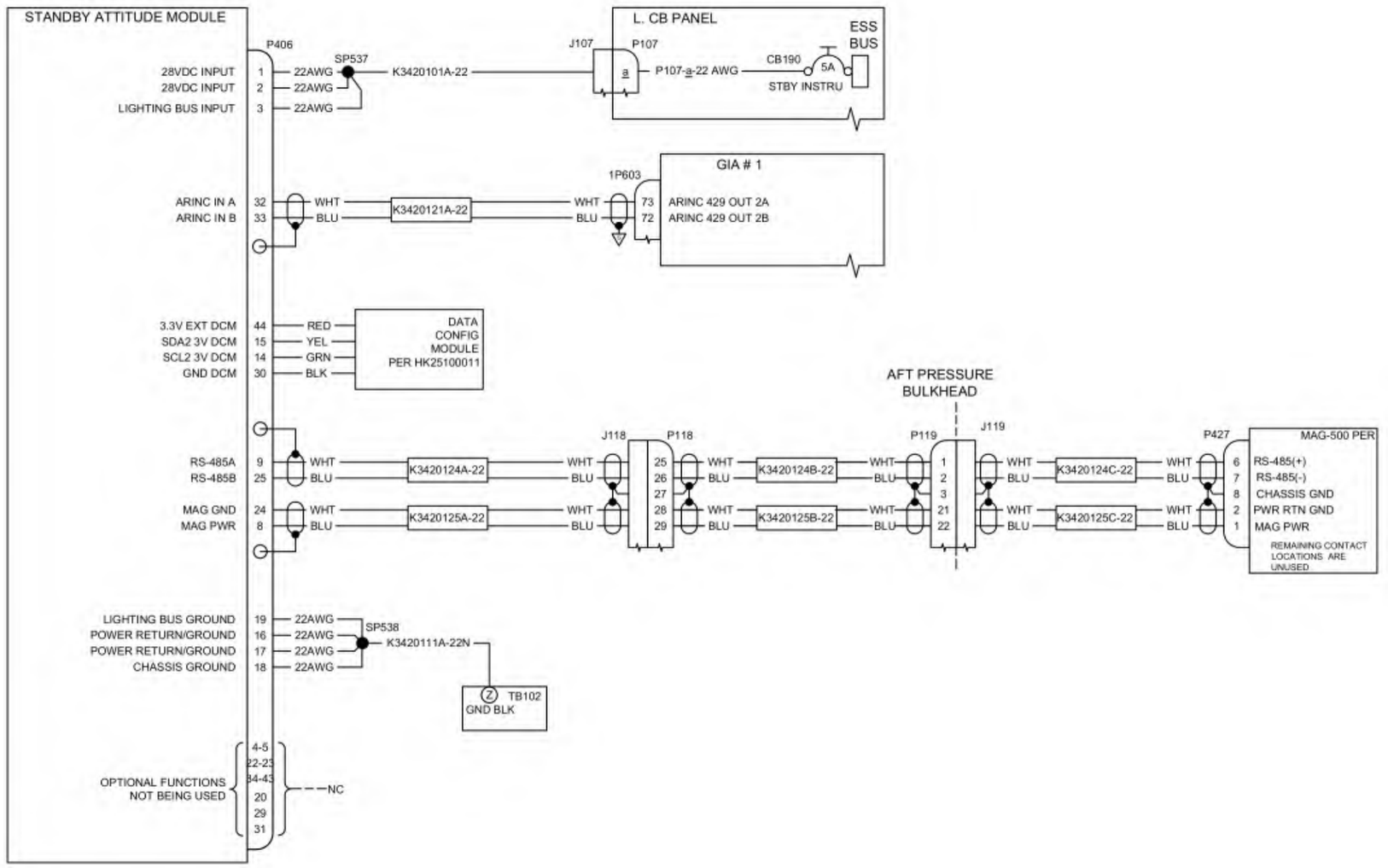

Figure 34-20.2: *WK34200001B- Standby Instrument System - Garmin GI-275

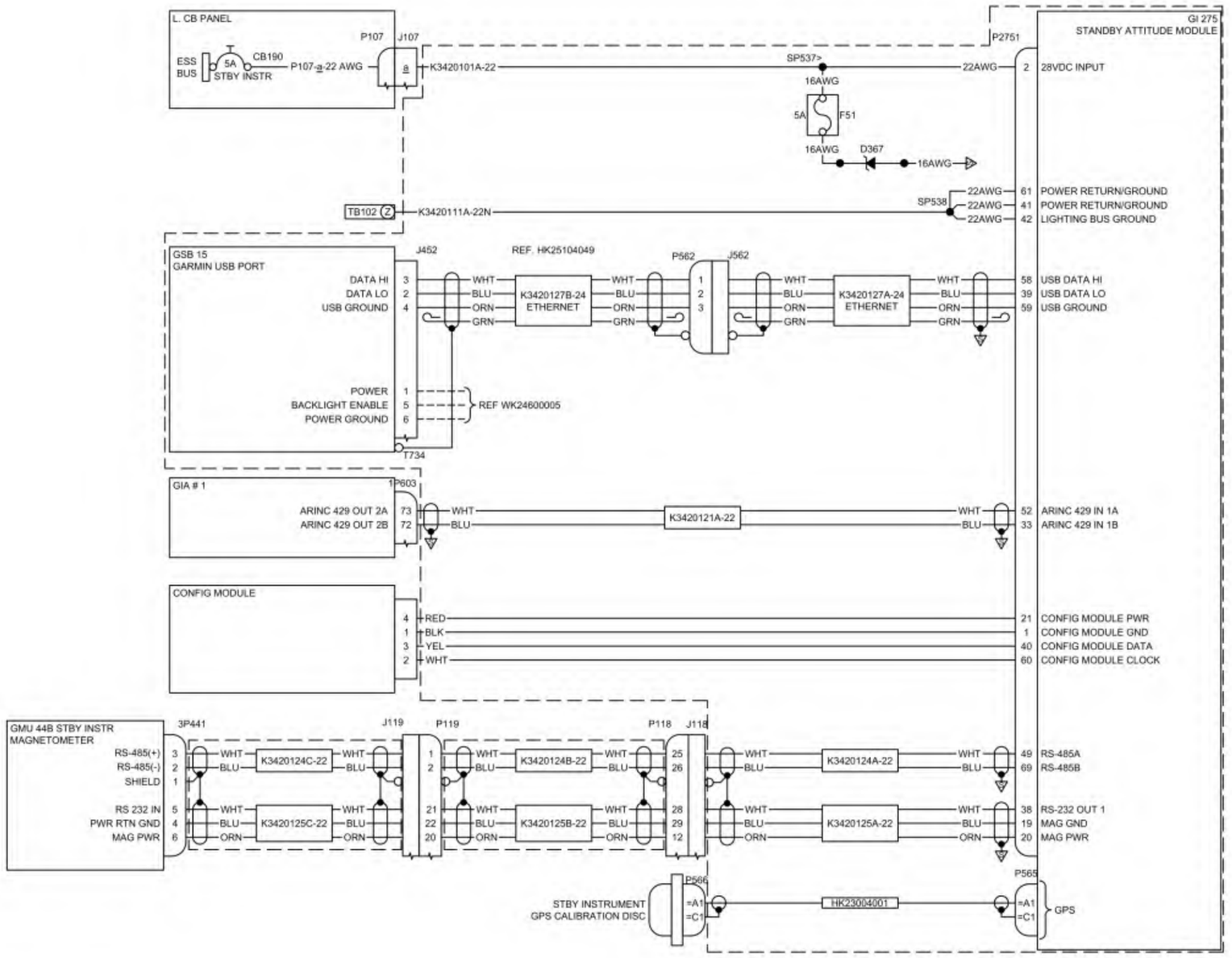

* (STC# SA02658SE Only)

Figure 34-40.1: WK34400001 - - Weather Radar

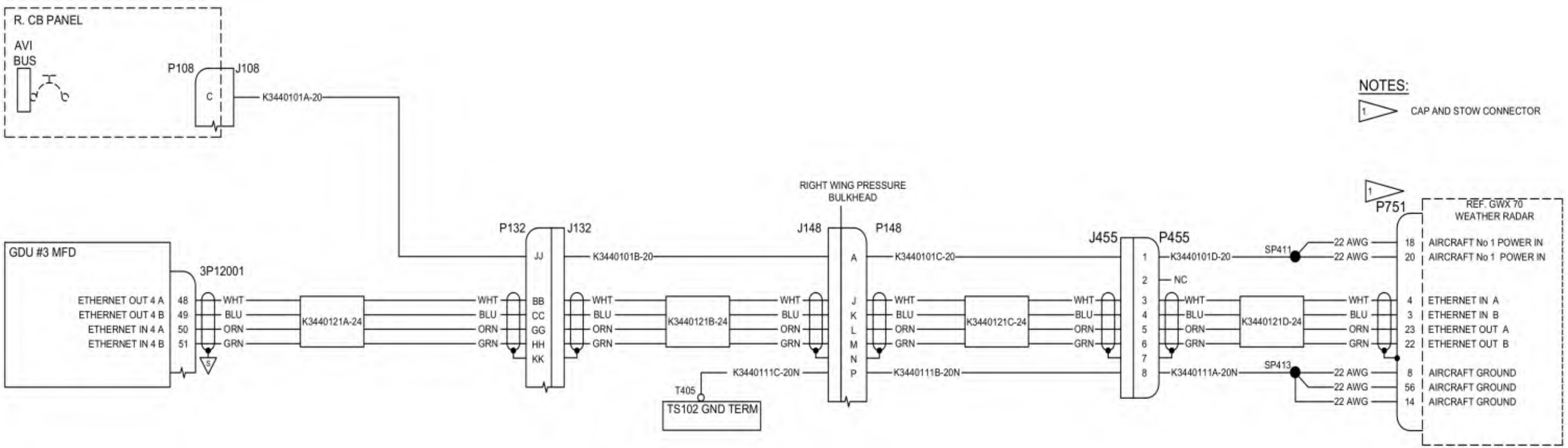

Figure 34-40.2: WK34400001A -- Weather Radar (optional)

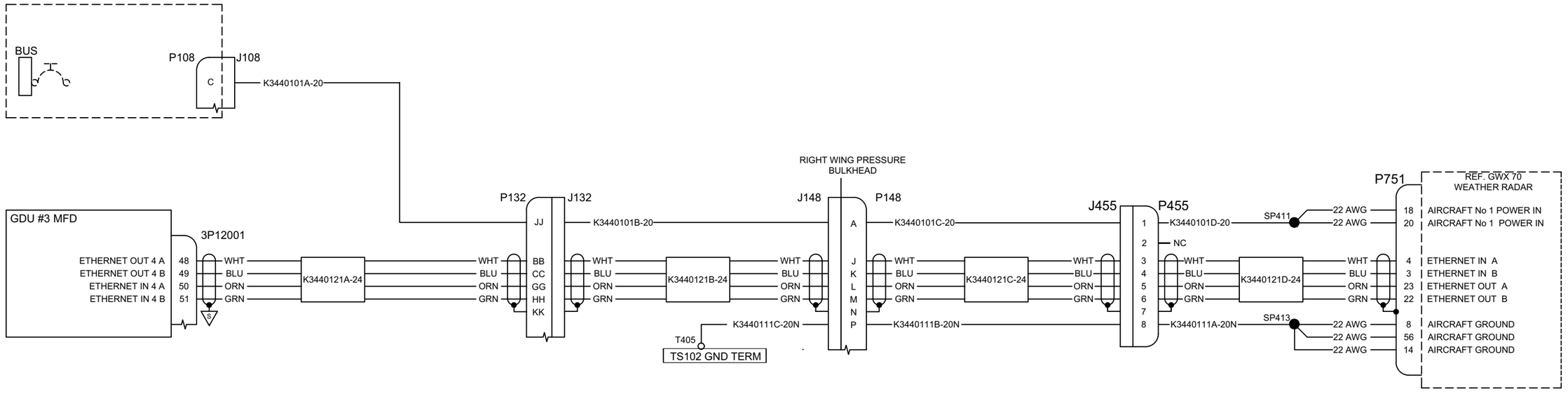

Figure 34-50.1: WK34500001-- (Sheet 1 of 2) Transponder and TAS (SN: K003-K010)

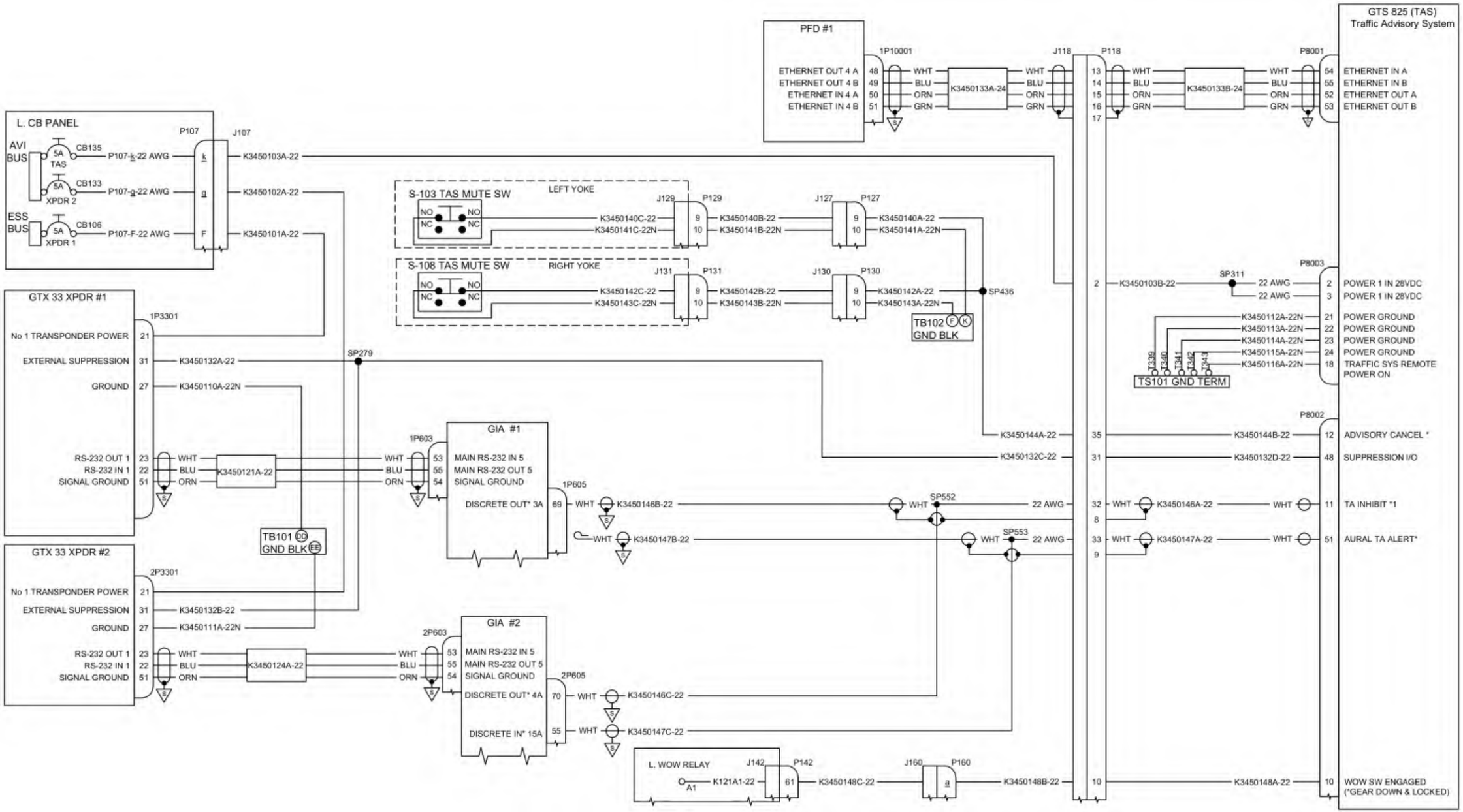

Figure 34-50.1: WK34500001-- (Sheet 2 of 2) Transponder and TAS (SN: K003-K010)

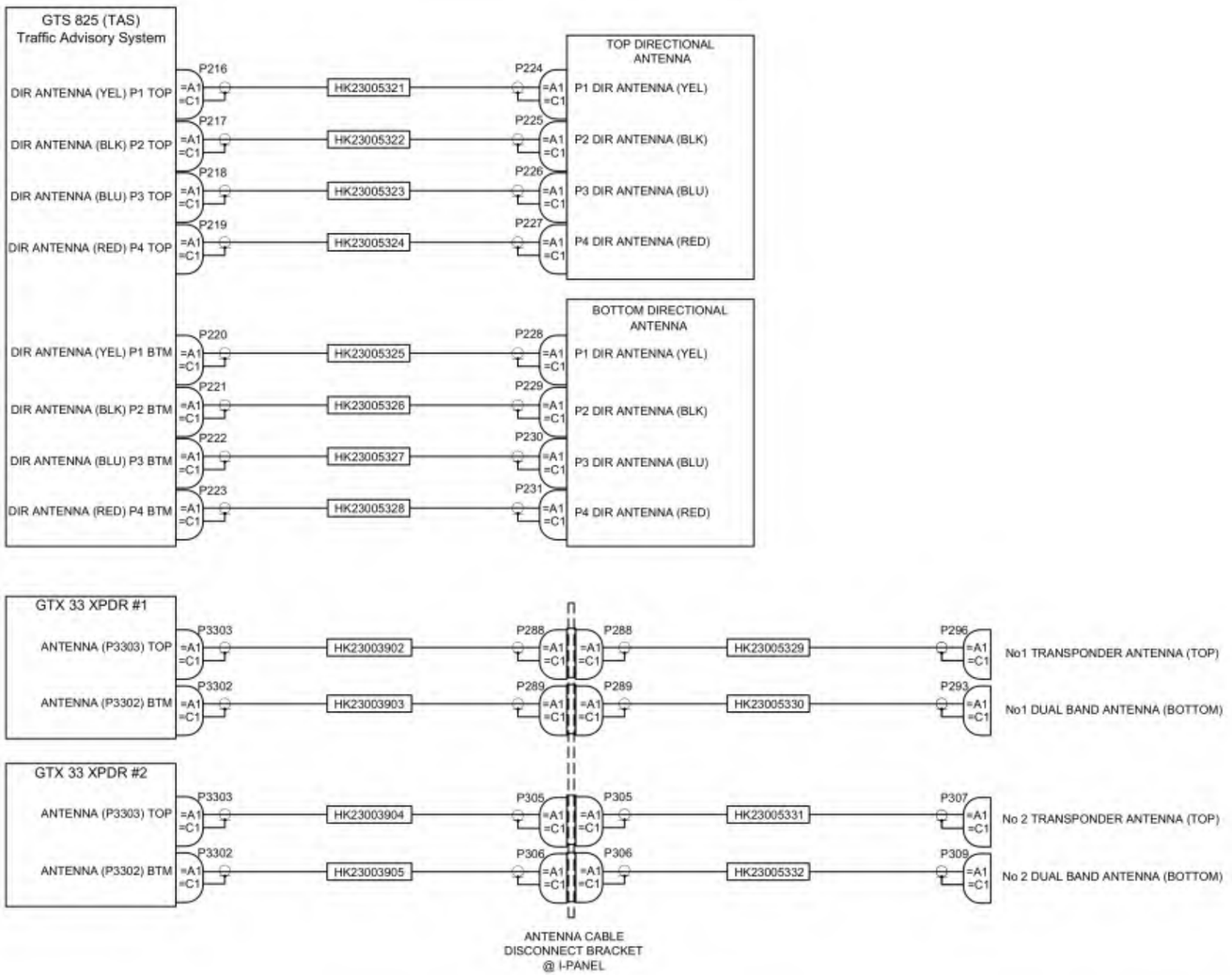

Figure 34-50.2: WK34502001-- (Sheet 1 of 2) Transponder and TAS (SN: K011 and On, and K003-K010 with SB-0017)

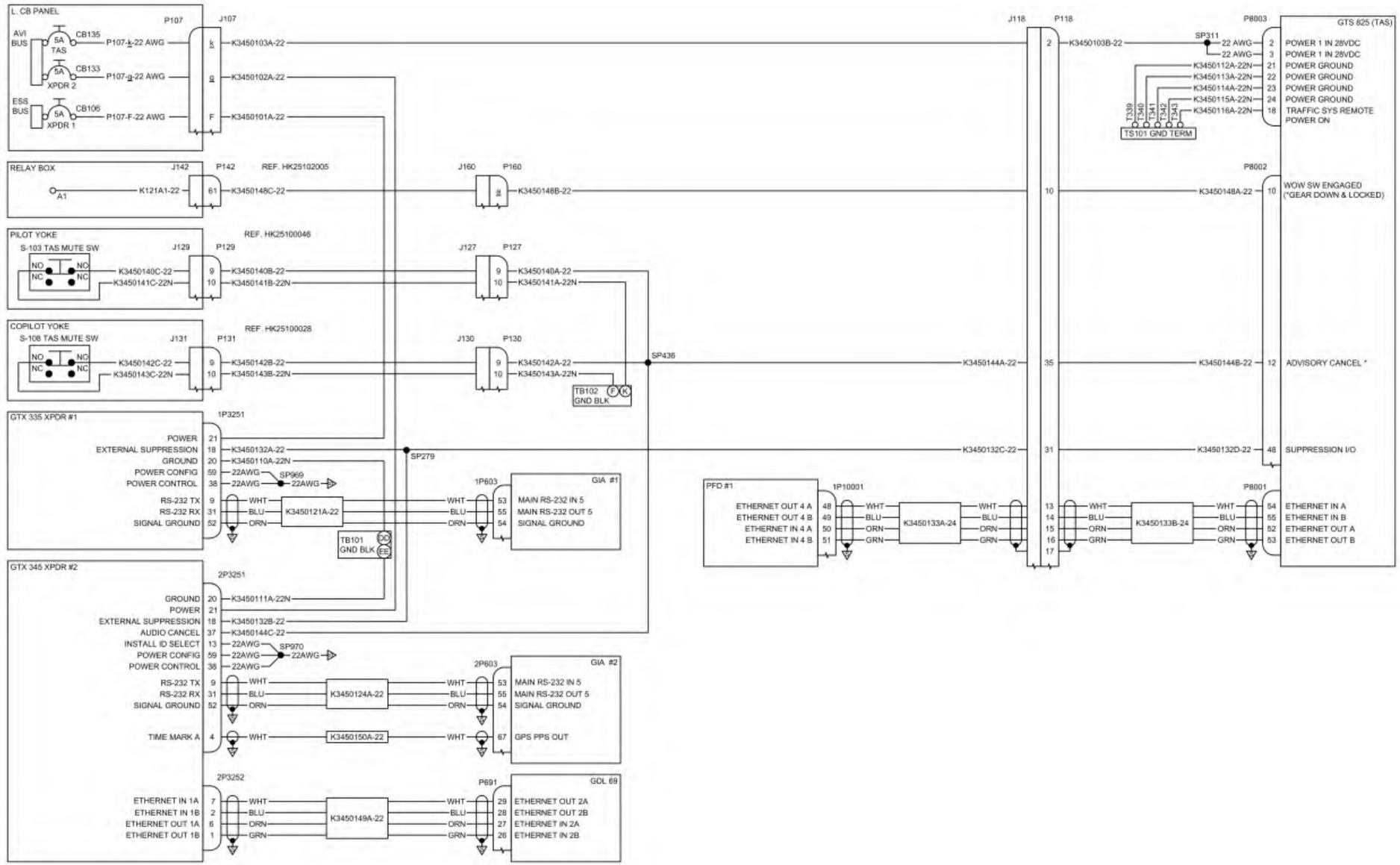

Figure 34-50.2: WK34502001-- (Sheet 2 of 2) Transponder and TAS (SN: K011 and On, and K003-K010 with SB-0017)

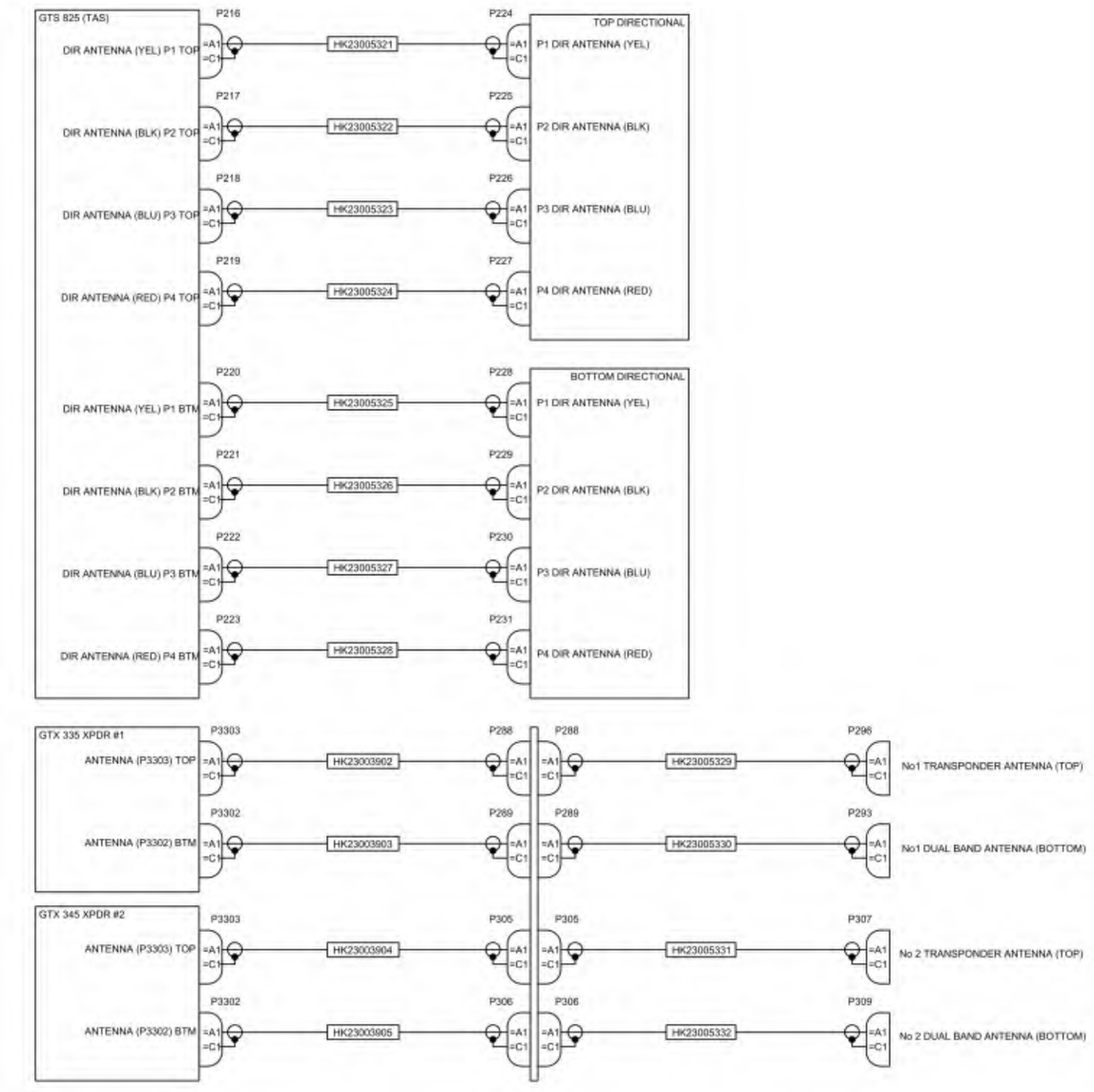

CHAPTER 35

Oxygen

This Page Intentionally Left Blank

List of Effective Pages

Chapter/Section	Page Number	Effective Date
35-Title	Page 1	02 Jan 2020
35-Title	Page 2	02 Jan 2020
35-LOEP	Page 1	02 Jan 2020
35-LOEP	Page 2	02 Jan 2020
35-TOC	Page 1	02 Jan 2020
35-TOC	Page 2	02 Jan 2020
35-00	Page 1	02 Jan 2020
35-00	Page 2	02 Jan 2020
35-00	Page 3	02 Jan 2020
35-00	Page 4	02 Jan 2020

This Page Intentionally Left Blank

CHAPTER 35

Table of Contents

List of Effective Pages ..... 35-LOEP / Page 1
Table of Contents ..... 35-TOC / Page1

Paragraph **Page Number**

Oxygen

1. General ..... 35-00 / Page 1

Oxygen System

Figure 35-10.1: WK35100001-1 Oxygen System ..... 35-010 / Page 1

This Page Intentionally Left Blank

OXYGEN

1. General

This airplane has a continuous supply oxygen system designed for two crew members and up to four passengers. Crew oxygen is “always on” to quick don masks with on-demand regulators. Quick connect outlets for the crew masks are located at the forward outboard sides of the cabin floor next to the seats. Passenger oxygen is supplied by continuous flow to masks that automatically deploy from ceiling mounted cartridges when needed.

The system has an oxygen cylinder with regulator, a pressure transducer, a service port, a pressure gauge at the service port, an over-pressure/over-fill relief valve, an altitude switch, two low pressure switches, distribution tubing, and oxygen masks.

The system provides 2 hours of oxygen to the crew and 10 minutes of oxygen for all four passengers.

(1) Oxygen Cylinder - 40 cubic ft. capacity with a nominal working pressure of 1850 psi.

The cylinder has a seamless aluminum core over-wrapped with Kevlar.

(2) Regulator - An Electrically Actuated Regulator (EAR) is mounted directly to the oxygen cylinder and provides the pilot with remote control from a switch on the instrument panel. The EAR drives an ON/OFF lever using a brushless DC motor and uses limit switches to remove power from the motor and send the state of the valve to the avionics suite. When the lever is in the ON position, high-pressure oxygen from the cylinder is reduced in pressure then flows to the low pressure outlets. In the OFF position, oxygen does not flow to the low pressure outlet ports and they are vented to ambient pressure.

There are three high pressure connections (high pressure safety relief port, indication outlet port, and cylinder fill port) and two low pressure connections (low pressure relief port and low pressure outlet).

A pressure transducer is installed on the high pressure indication port that sends oxygen cylinder pressure information to the crew through avionics suite

Note: Tubing - Stainless steel tubing routes low pressure oxygen from the EAR to the passenger Mask Deployment System (MPS) and the crew oxygen quick connect outlets.

(3) Flexible Lines - Flexible lines connect the EAR to the fill port and to the over-pressure/over-fill relief valve.

(4) Fill Port - The fill port is a brass fitting with an integral check valve and orifice. The orifice is sized (based on oxygen cylinder size) to proved an optimum oxygen cylinder fill rate while minimizing cylinder heating. The check valve prevents contamination of the oxygen system.

A pressure gauge is connected to the fill port to aid in oxygen cylinder refilling.

(5) Over-Pressure/Over-fill Relief Valve - An over-pressure/over-fill Relief valve is used to discharge the oxygen system if the system is over pressurized. The valve is connected to the high pressure safety relief port by a flexible line, is installed in the bottom of the fuselage, and vents to the outside of the cabin.

The relief valve has a replaceable Overboard Discharge Indicator (ODI) that will dislodge when the line pressure reaches 80 psig ± 30 psig and is vented through the relief valve. The ODI is colored green to be more visible during the preflight inspection.

(6) Altitude Switch - A normally open barometric altitude switch that closes at a cabin altitude of 14500 ft ± 500 ft is installed in the oxygen system. When the switch closes the regulator opens the low pressure outlet to provide oxygen to the passenger mask deployment system.

Low Pressure Switch - There are two low pressure switches in the oxygen system (one for the passenger supply circuit and one for the crew supply circuit). These switches notify the pilot through the avionics suite when the crew and passengers have oxygen available.

Figure 35-10.1: WK35100001-1 Oxygen System

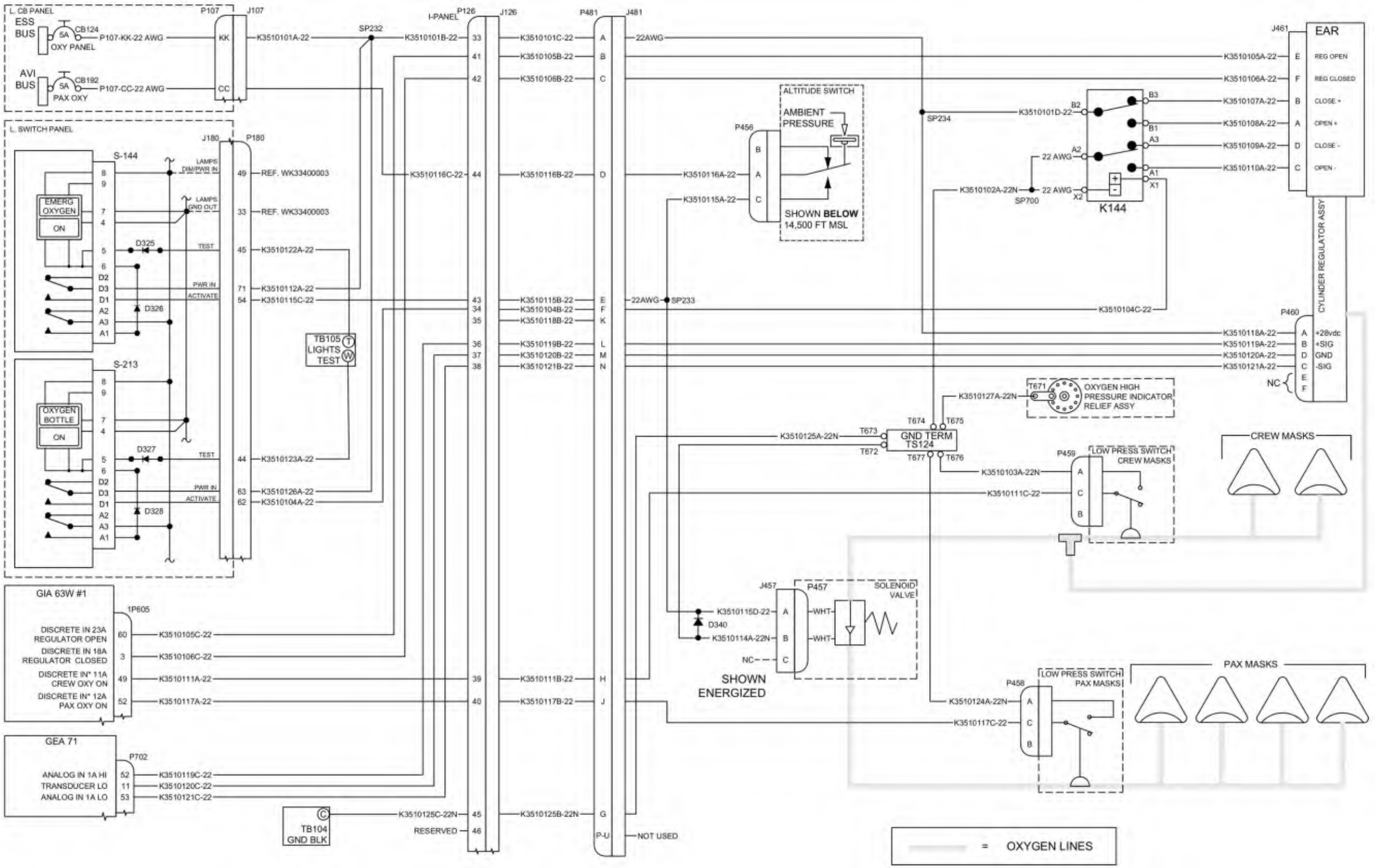

This Page Intentionally Left Blank

CHAPTER 39

Electrical Panels and Multipurpose Components

This Page Intentionally Left Blank

List of Effective Pages

Chapter/Section	Page Number	Effective Date
39-Title	Page 1	02 Jan 2020
39-Title	Page 2	02 Jan 2020
39-LOEP	Page 1	17 Aug 2022
39-LOEP	Page 2	02 Jan 2020
39-TOC	Page 1	17 Aug 2022
39-TOC	Page 2	02 Jan 2020
39-00	Page 1	02 Jan 2020
39-00	Page 2	02 Jan 2020
39-30	Page 1	17 Aug 2022
39-30	Page 2	17 Aug 2022

This Page Intentionally Left Blank

CHAPTER 39

Table of Contents

List of Effective Pages ..... 39-LOEP / Page 1
Table of Contents ..... 39-TOC / Page1

Paragraph **Page Number**

Electrical Panels And Multipurpose Components

Figure 39-0.1: WK39100001-1 Systems Status Display 39-0 / Page 1

Electrical and Electronic Junction Boxes

Figure 39-30.1: Relay Panel (SN: K003- K012) ..... 39-30 / Page 1
Figure 39-30.2: Relay Panel (SN: K014 and On) ..... 39-30 / Page 2

This Page Intentionally Left Blank

Figure 39-0.1: WK39100001-1 Systems Status Display

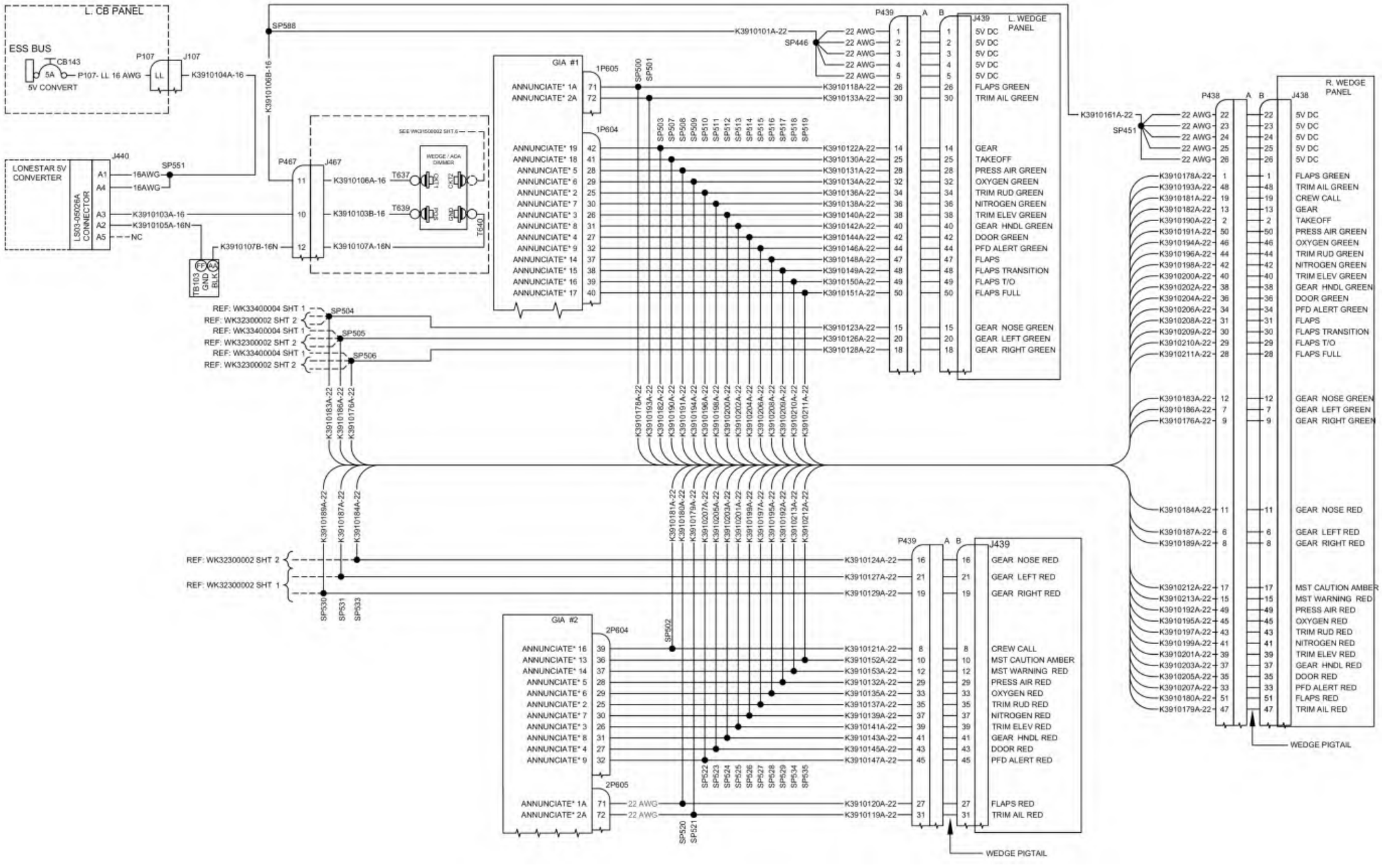

Figure 39-00.1: WK39100001-1 Systems Status Display (Continued)

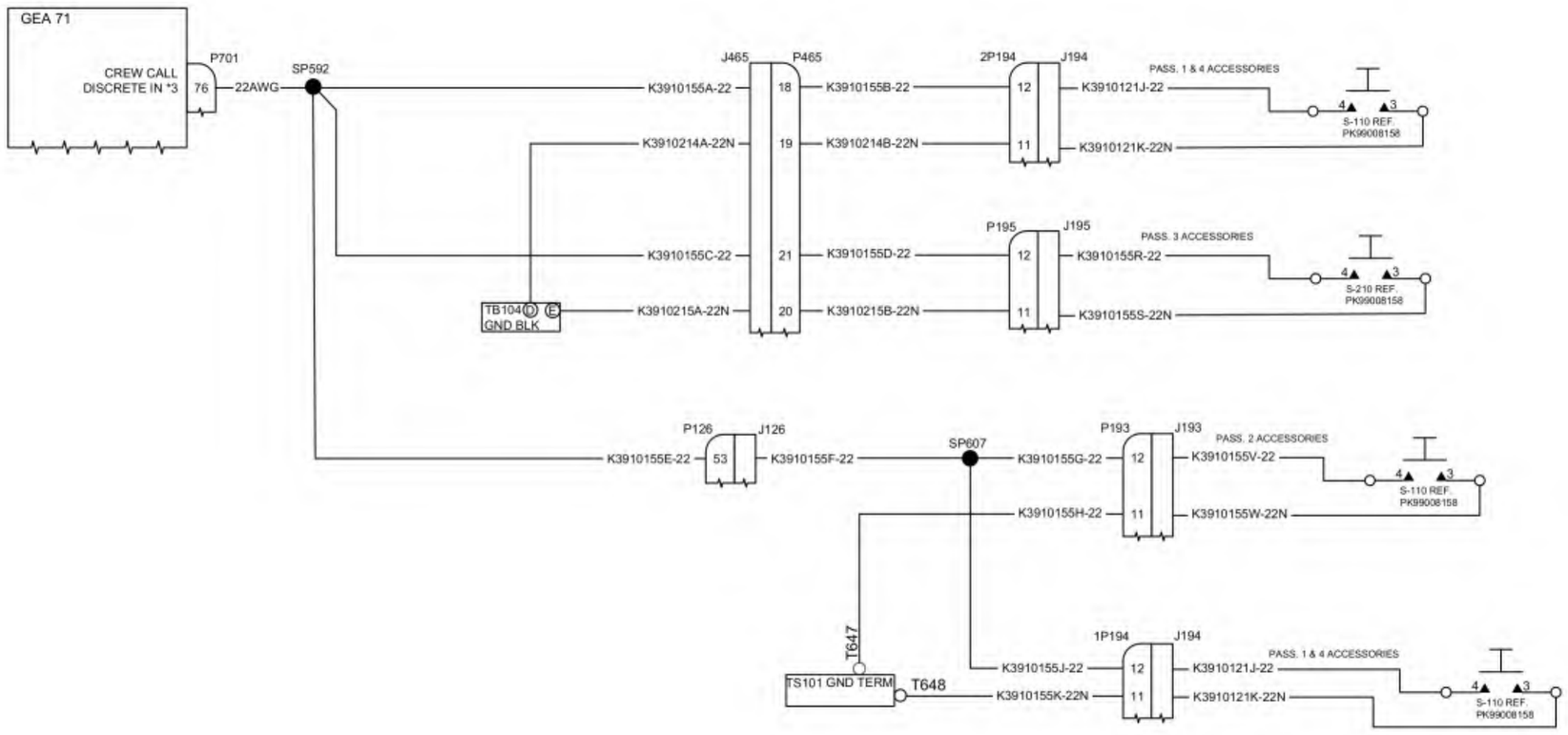

Figure 39-30.1: Relay Panel (SN: K003- K012)

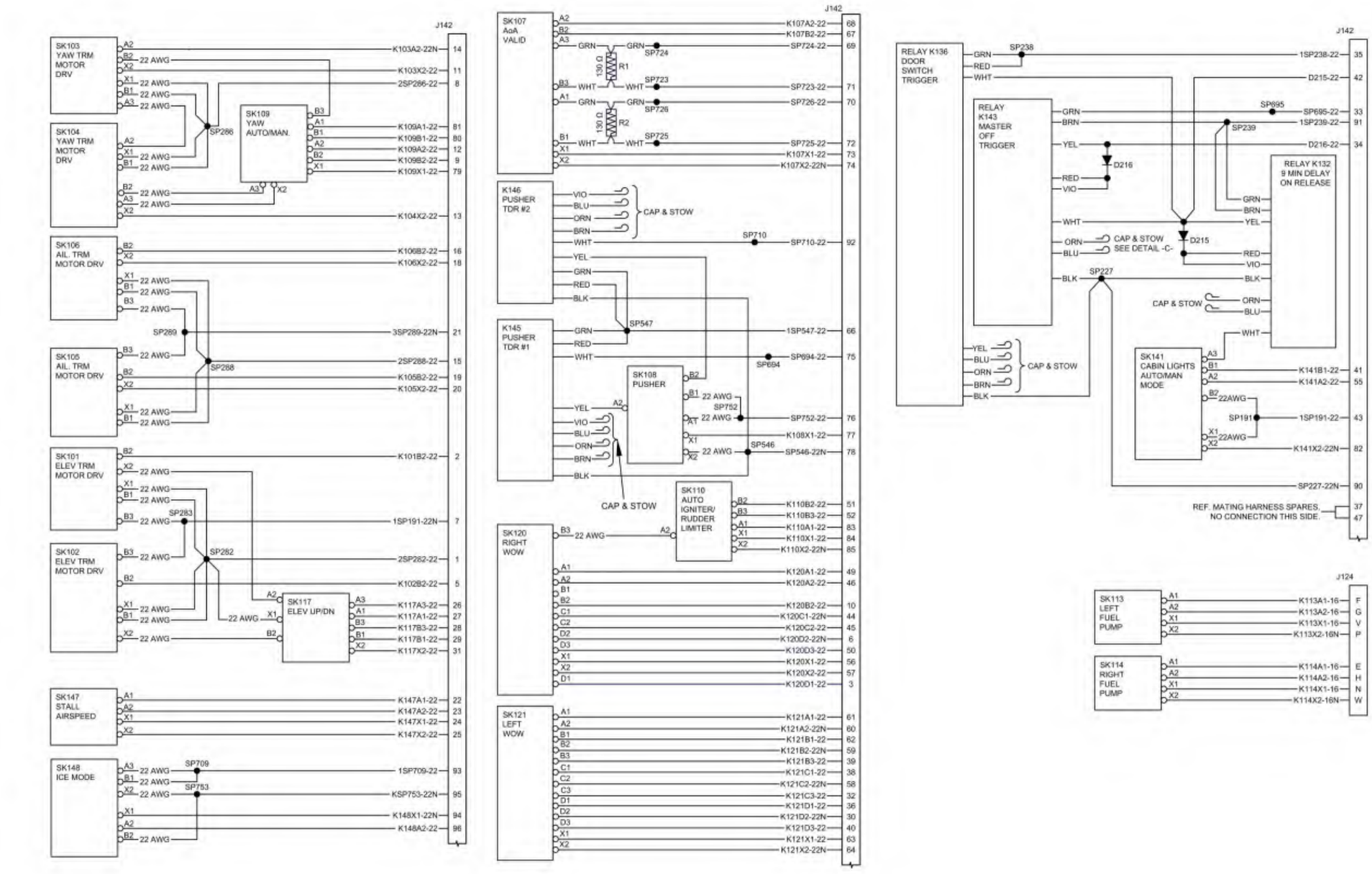

Figure 39-30.2: Relay Panel (SN: K014 and On)

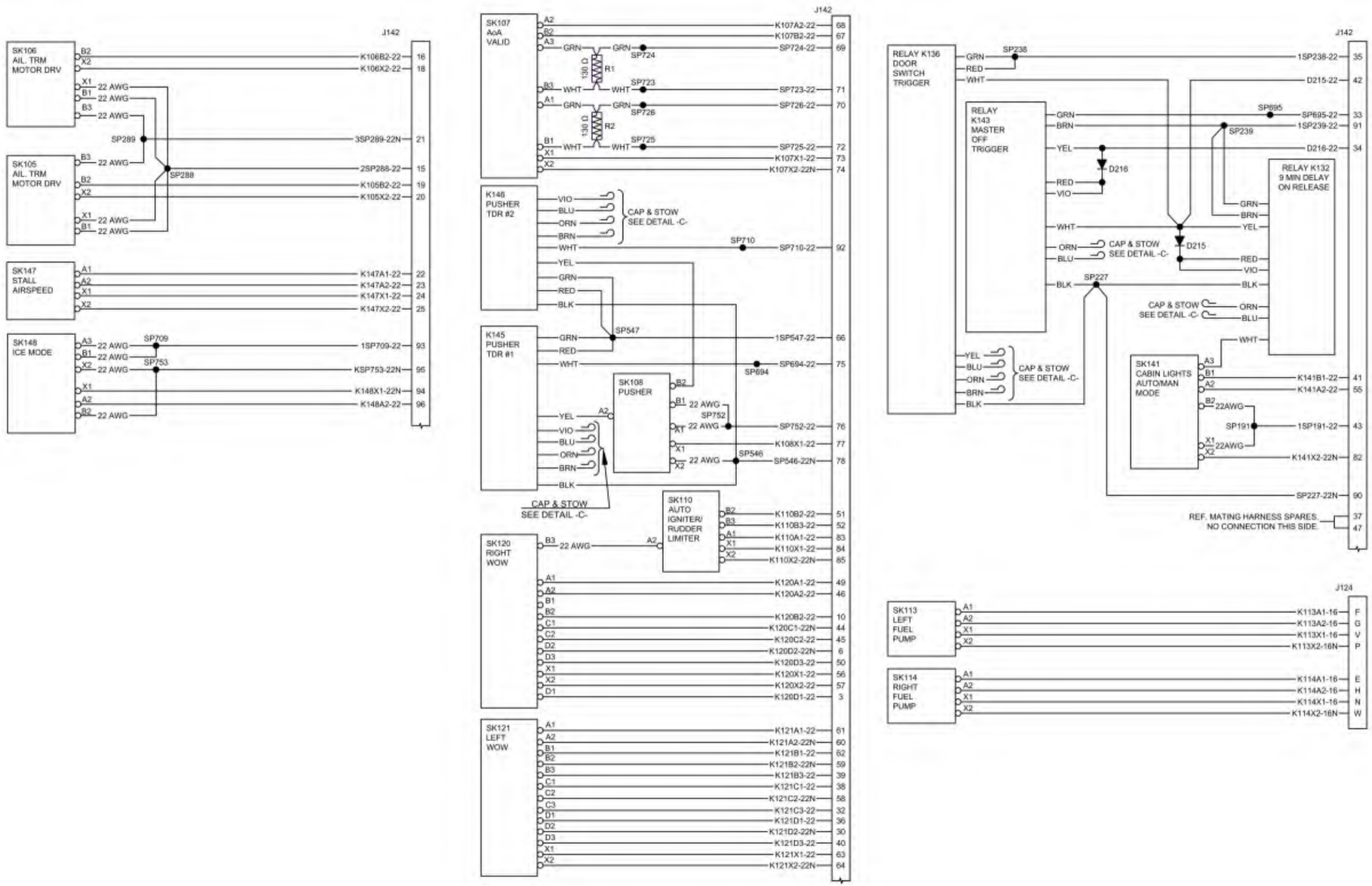

CHAPTER 52

Doors

This Page Intentionally Left Blank

List of Effective Pages

Chapter/Section	Page Number	Effective Date
52-Title	Page 1	02 Jan 2020
52-Title	Page 2	02 Jan 2020
52-LOEP	Page 1	02 Jan 2020
52-LOEP	Page 2	02 Jan 2020
52-TOC	Page 1	02 Jan 2020
52-TOC	Page 2	02 Jan 2020
52-00	Page 1	02 Jan 2020
52-00	Page 2	02 Jan 2020
52-10	Page 1	02 Jan 2020
52-10	Page 2	02 Jan 2020

This Page Intentionally Left Blank

CHAPTER 52

Table of Contents

List of Effective Pages ..... 52-LOEP / Page 1
Table of Contents ..... 52-TOC / Page1

Paragraph **Page Number**

Doors

1. General ..... 52-00 / Page 1

Passenger/Crew

Figure 52-10.1: WK52700001-1 Door Warning ..... 52-10 / Page 1
Figure 52-10.2: WK52700002-1 Door Seal ..... 52-10 / Page 2

This Page Intentionally Left Blank

DOORS

1. General

This airplane has a single passenger/crew door and a single emergency exit door.

The passenger/crew door has a door latch mechanism, steps, a window, and an inflatable door seal that is mounted on the fuselage.

Note: A single emergency exit door is located across from the passenger/crew door for emergency evacuation of the aircraft. This door has two door latch mechanisms, a window, and a rubber door seal mounted on the fuselage.

This Page Intentionally Left Blank

Figure 52-10.1: WK52700001-1 Door Warning

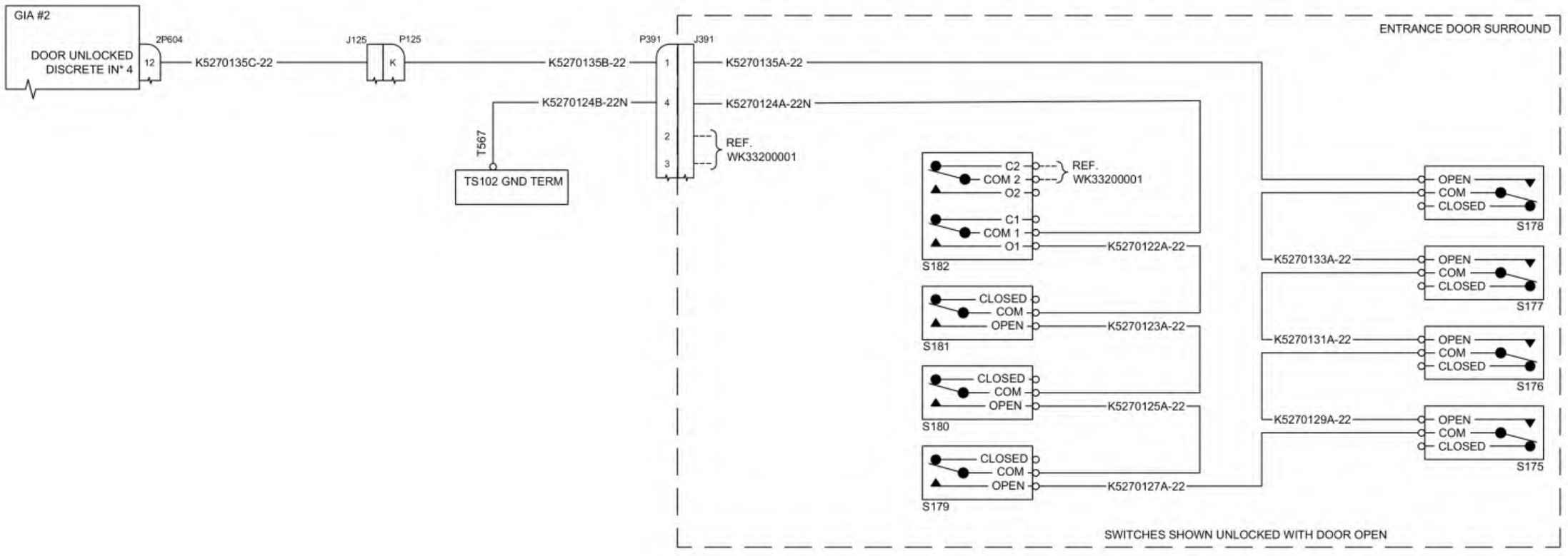

Figure 52-10.2: WK52700002-1 Door Seal

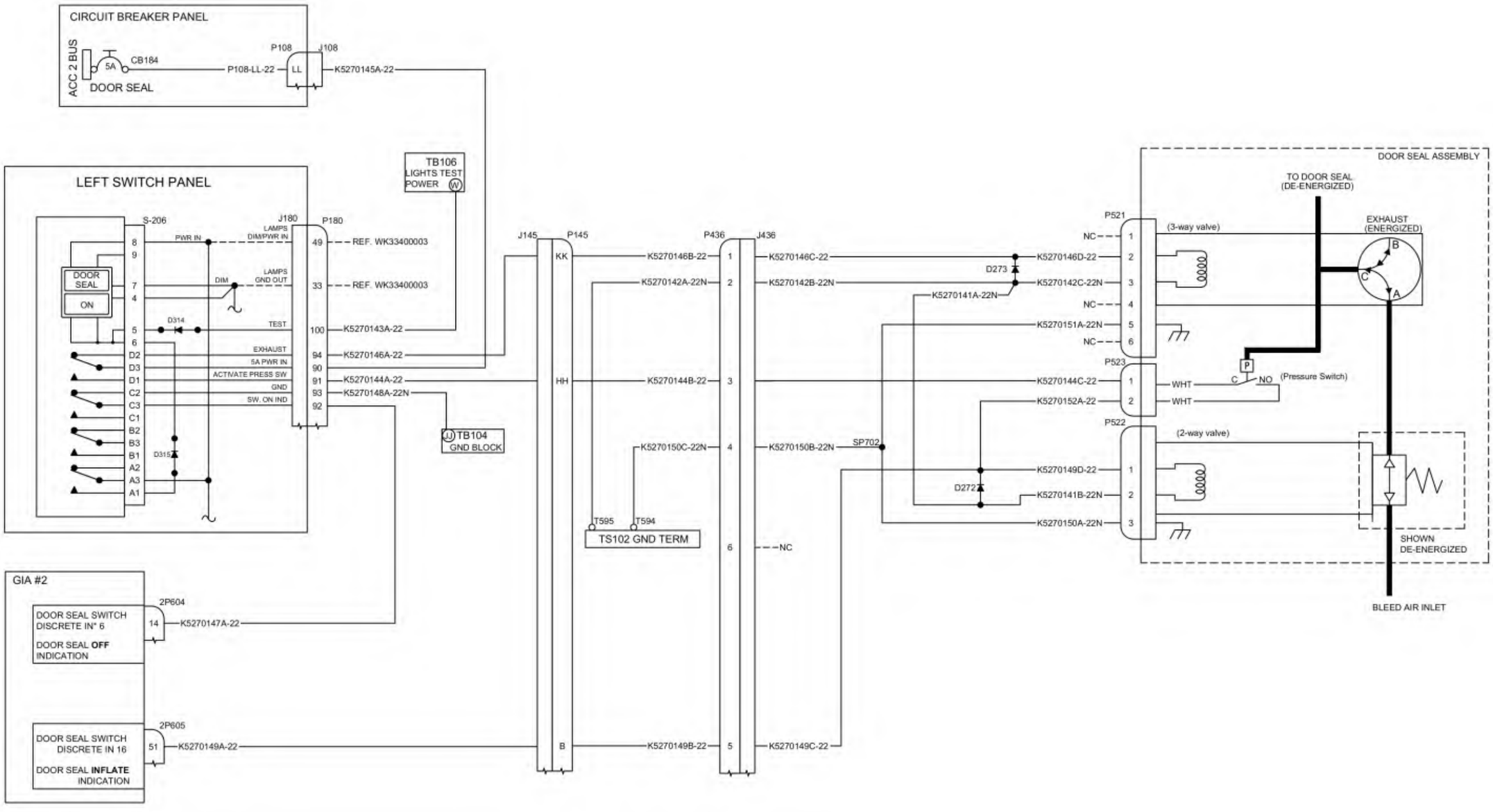

CHAPTER 56

Windows

This Page Intentionally Left Blank

List of Effective Pages

Chapter/Section	Page Number	Effective Date
56-Title	Page 1	02 Jan 2020
56-Title	Page 2	02 Jan 2020
56-LOEP	Page 1	14 July 2025
56-LOEP	Page 2	02 Jan 2020
56-TOC	Page 1	14 July 2025
56-TOC	Page 2	02 Jan 2020
56-00	Page 1	02 Jan 2020
56-00	Page 2	02 Jan 2020
56-20	Page 1	02 Jan 2020
56-20	Page 2	02 Jan 2020
56-20	Page 3	02 Jan 2020
56-20	Page 4	02 Jan 2020
56-20	Page 5	02 Jan 2020
56-20	Page 6	02 Jan 2020

This Page Intentionally Left Blank

CHAPTER 56

Table of Contents

List of Effective Pages ..... 56-LOEP / Page 1
Table of Contents ..... 56-TOC / Page1

Paragraph **Page Number**

Doors

1. General ..... 56-00 / Page 1

Passenger Compartment

Figure 56-20.1: WK44600005-1 Window Dimming (Sheet 1 of 6) (SN:K003 - K084, Optional K085 and On) ..... 56-20 / Page 1

This Page Intentionally Left Blank

WINDOWS

1. General

Note: The windows and the windshield on this aircraft are made of a layer of polyvinyl butyral sandwiched between two layers of stretched acrylic. They are permanently bonded to joggles in the fuselage on the inside of the cockpit, the passenger cabin, the door, and the emergency exit. All the windows are fixed and cannot be opened.

This Page Intentionally Left Blank

Figure 56-20.1: WK44600005-1 Window Dimming (Sheet 1 of 6) (SN:K003 - K084, Optional K085 and On)

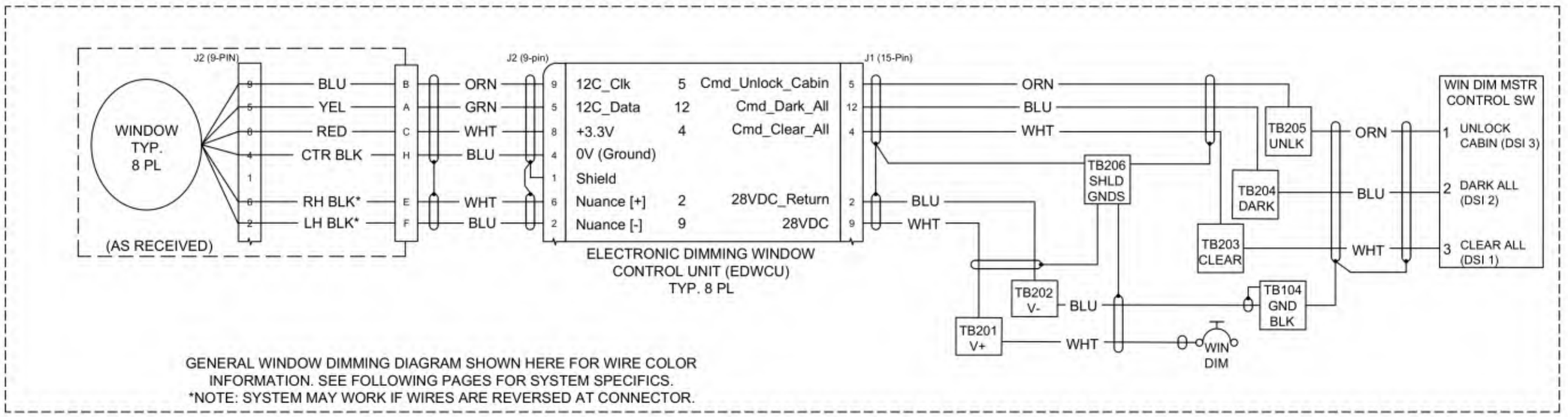

Figure 56-20.1: WK44600005-1 Window Dimming (Sheet 2 of 6) (SN:K003 - K084, Optional K085 and On)

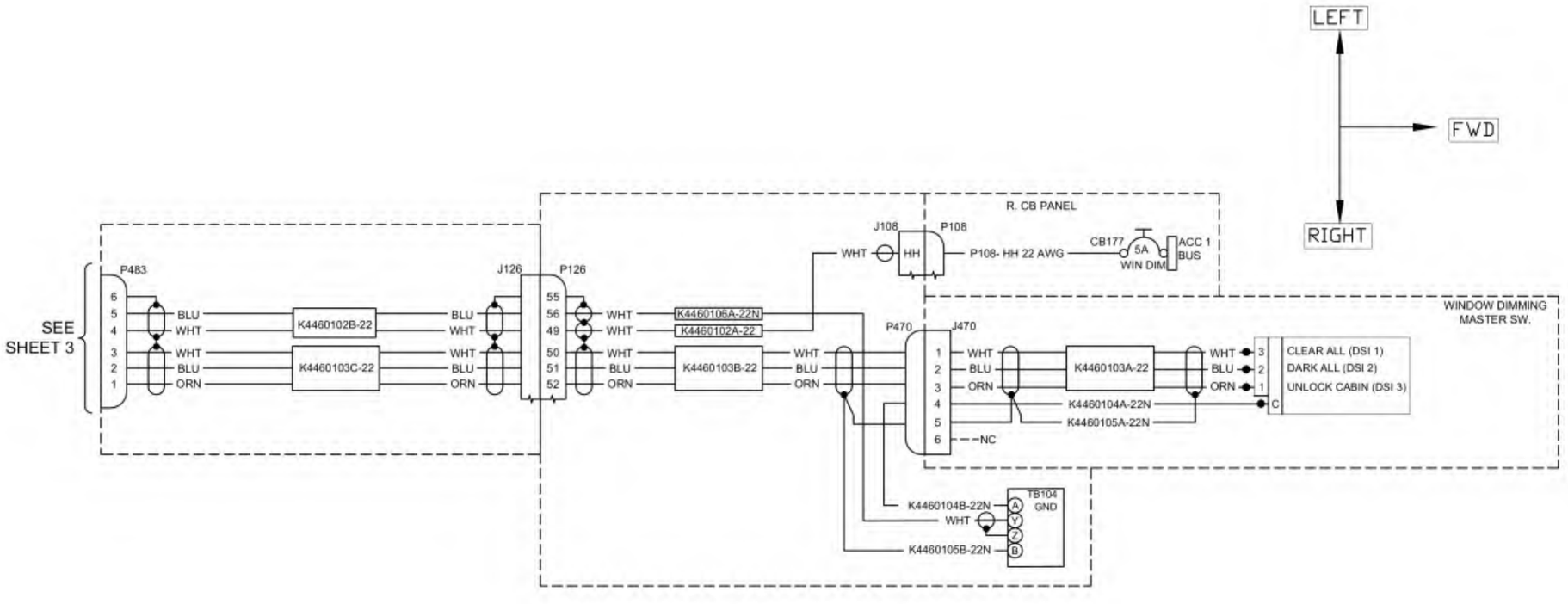

Figure 56-20.1: WK44600005-1 Window Dimming (Sheet 3 of 6) (SN:K003 - K084, Optional K085 and On)

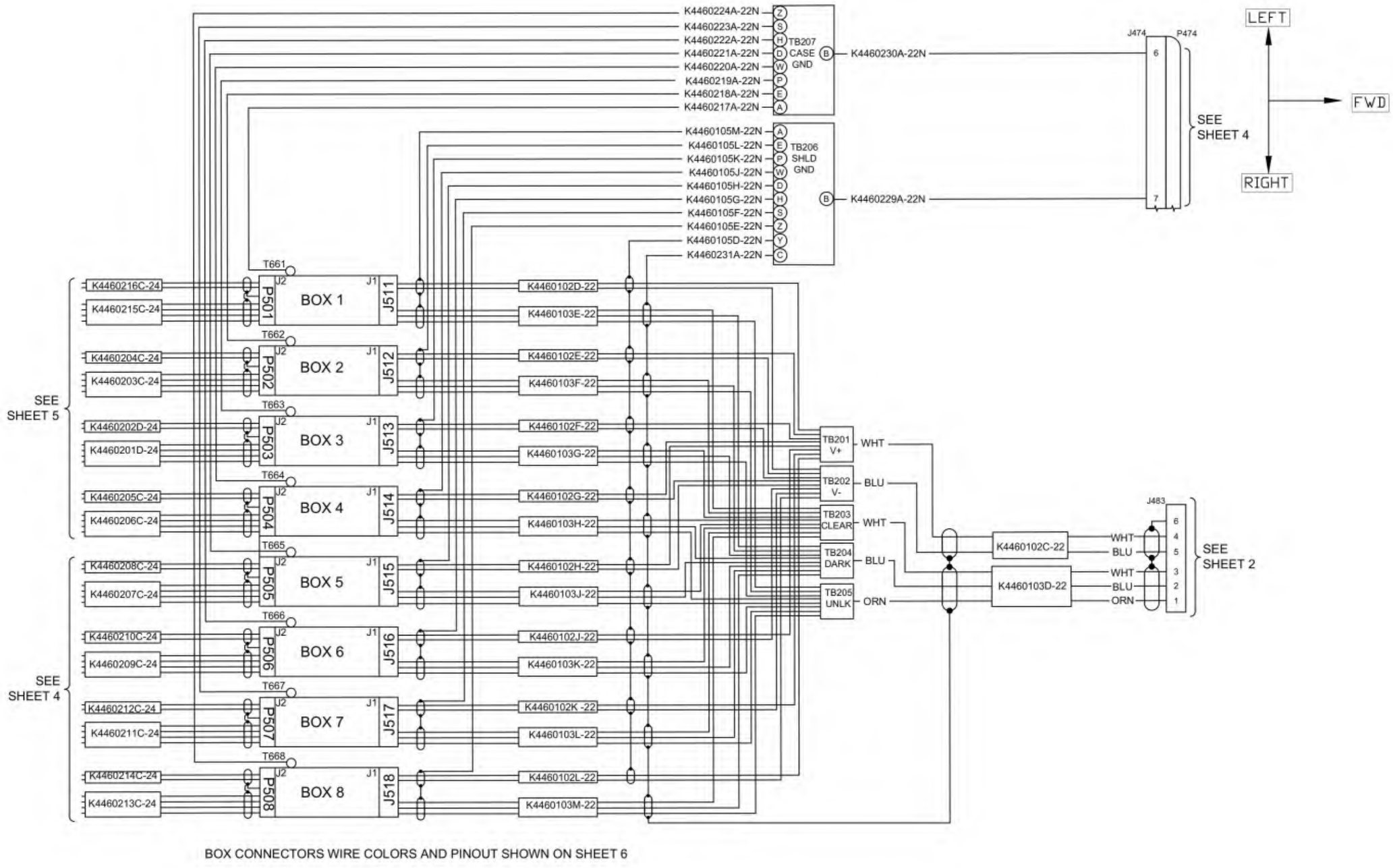

Figure 56-20.1: WK44600005-1 Window Dimming (Sheet 4 of 6) (SN:K003 - K084, Optional K085 and On)

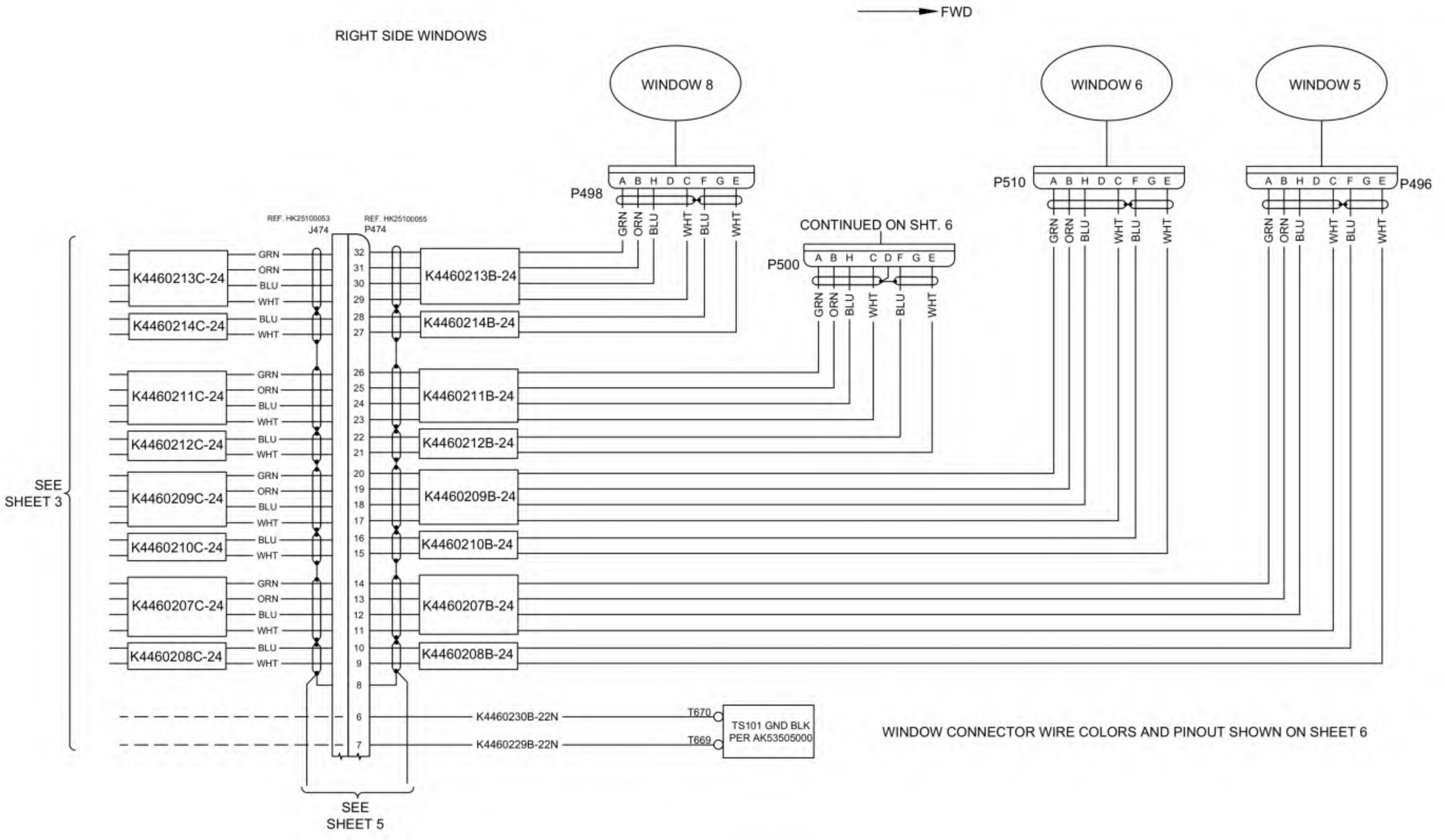

Figure 56-20.1: WK44600005-1 Window Dimming (Sheet 5 of 6) (SN:K003 - K084, Optional K085 and On)

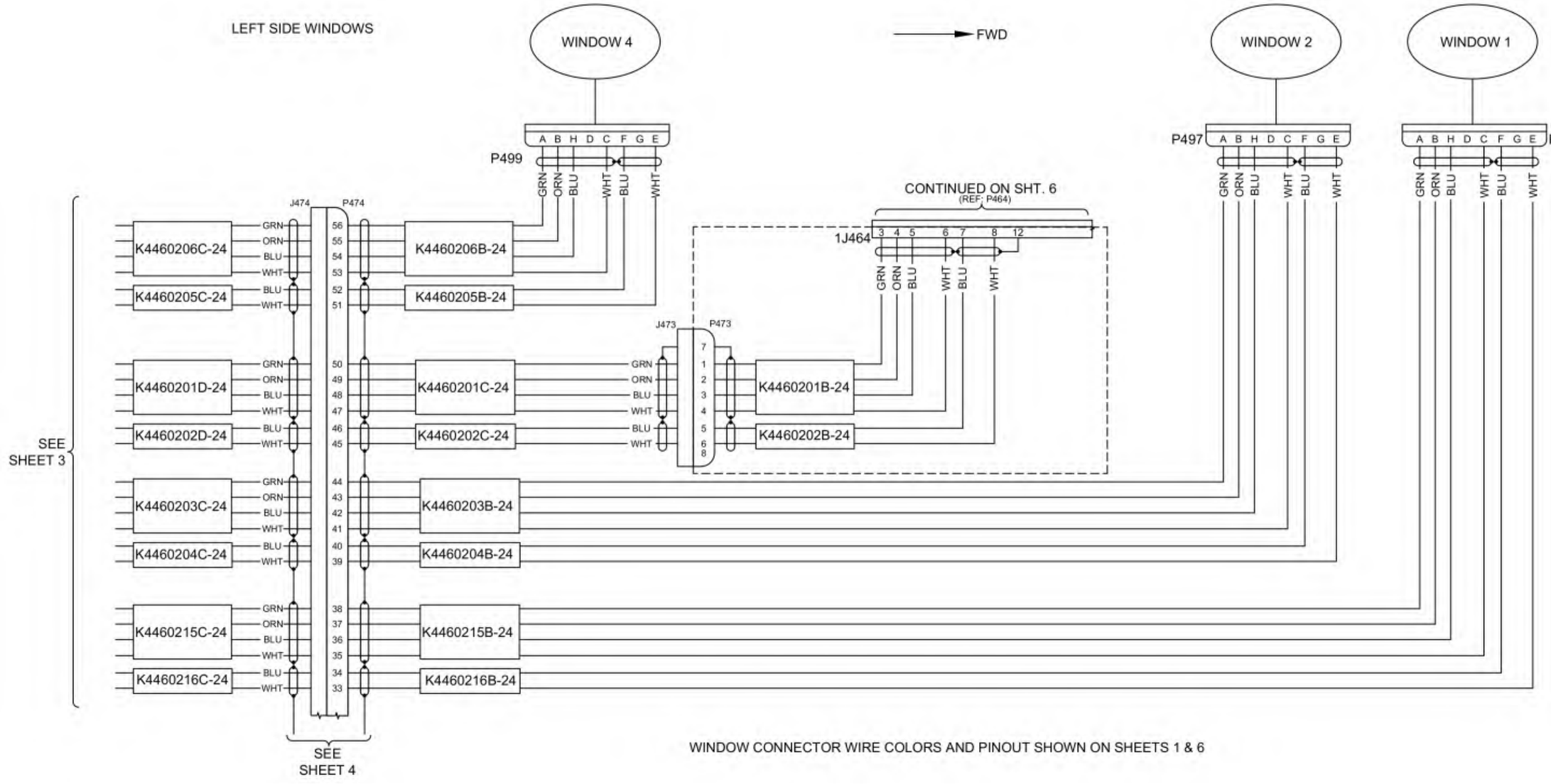

Figure 56-20.1: WK44600005-1 Window Dimming (Sheet 6 of 6) (SN:K003 - K084, Optional K085 and On)

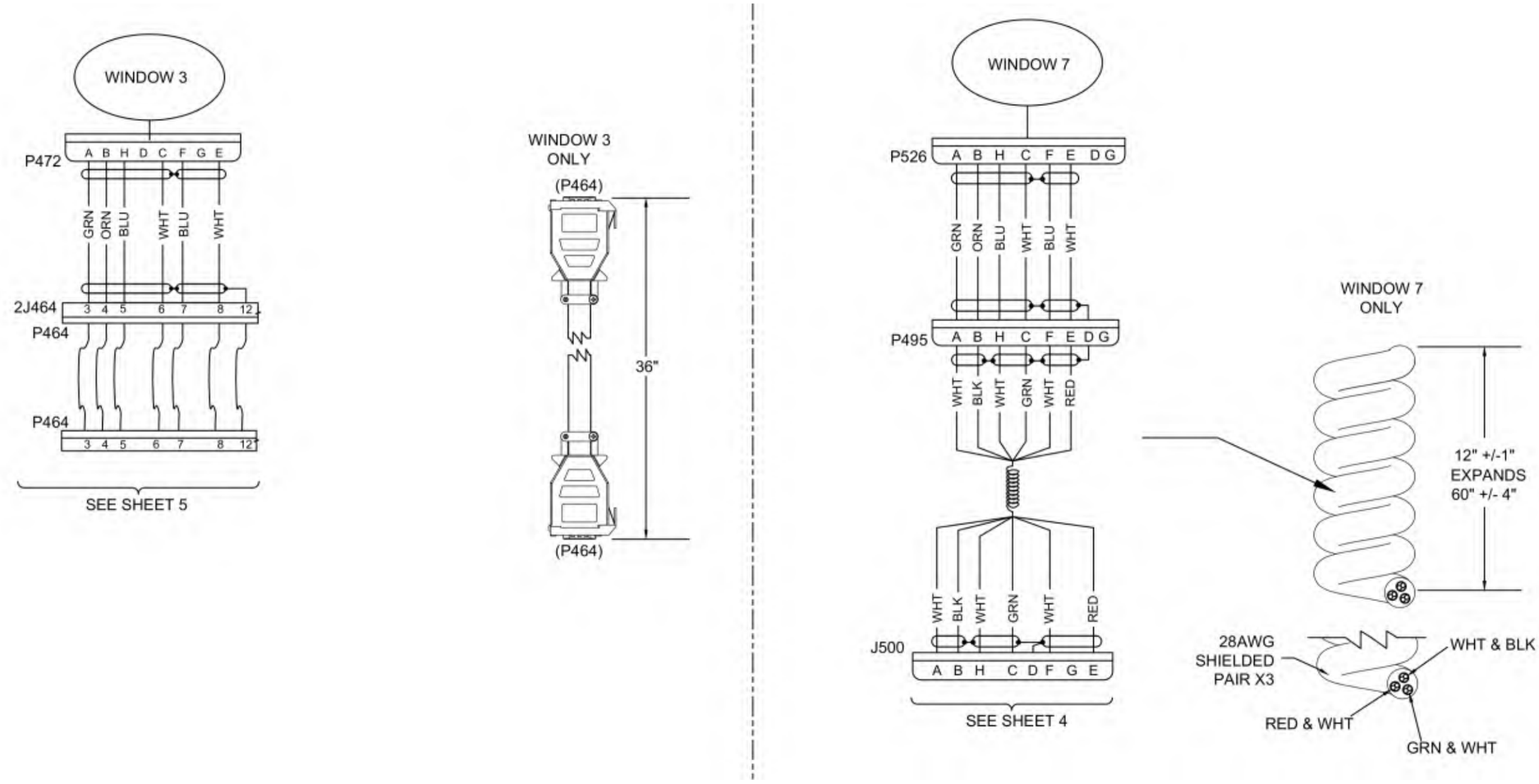

CHAPTER
71

Powerplant

This Page Intentionally Left Blank

List of Effective Pages

Chapter/Section	Page Number	Effective Date
71-Title	Page 1	02 Jan 2020
71-Title	Page 2	02 Jan 2020
71-LOEP	Page 1	14 July 2025
71-LOEP	Page 2	02 Jan 2020
71-TOC	Page 1	14 July 2025
71-TOC	Page 2	02 Jan 2020
71-00	Page 1	02 Jan 2020
71-00	Page 2	02 Jan 2020
71-60	Page 1	14 Jul 2021
71-60	Page 2	14 July 2025
71-60	Page 3	14 July 2025
71-60	Page 4	14 July 2025
71-60	Page 5	14 July 2025
71-60	Page 6	14 July 2025

This Page Intentionally Left Blank

CHAPTER 71

Table of Contents

List of Effective Pages ..... 71-LOEP / Page 1
Table of Contents ..... 71-TOC / Page1

Paragraph **Page Number**

Powerplant

1. General ..... 71-00 / Page 1

Inertial Separator

Figure 71-60.1: WK71600001-- Inertial Separator (SN: K003-K010) ..... 71-60 / Page 1
Figure 71-60.2: WK71601001-- (Sheet 1 of 2) Inertial Separator (SN: K003-K010 with SB-0017) ... 71-60 / Page 2
Figure 71-60.3: WK71602001-- (Sheet 1 of 2) Inertial Separator (SN: K011 and On) . 71-60 / Page 4

I

This Page Intentionally Left Blank

POWERPLANT

1. General

The airplane has a Pratt & Whitney PT6A-67A turbine engine that has two shafts and a 4-stage axial compressor driven by a single-stage centrifugal compressor turbine with an independent shaft coupling the power turbine to the propeller through an epicyclic concentric reduction gear-box. The engine generates 1200 SHP at 1700 RPM.

This Page Intentionally Left Blank

Figure 71-60.1: WK71600001-- Inertial Separator (SN: K003-K010)

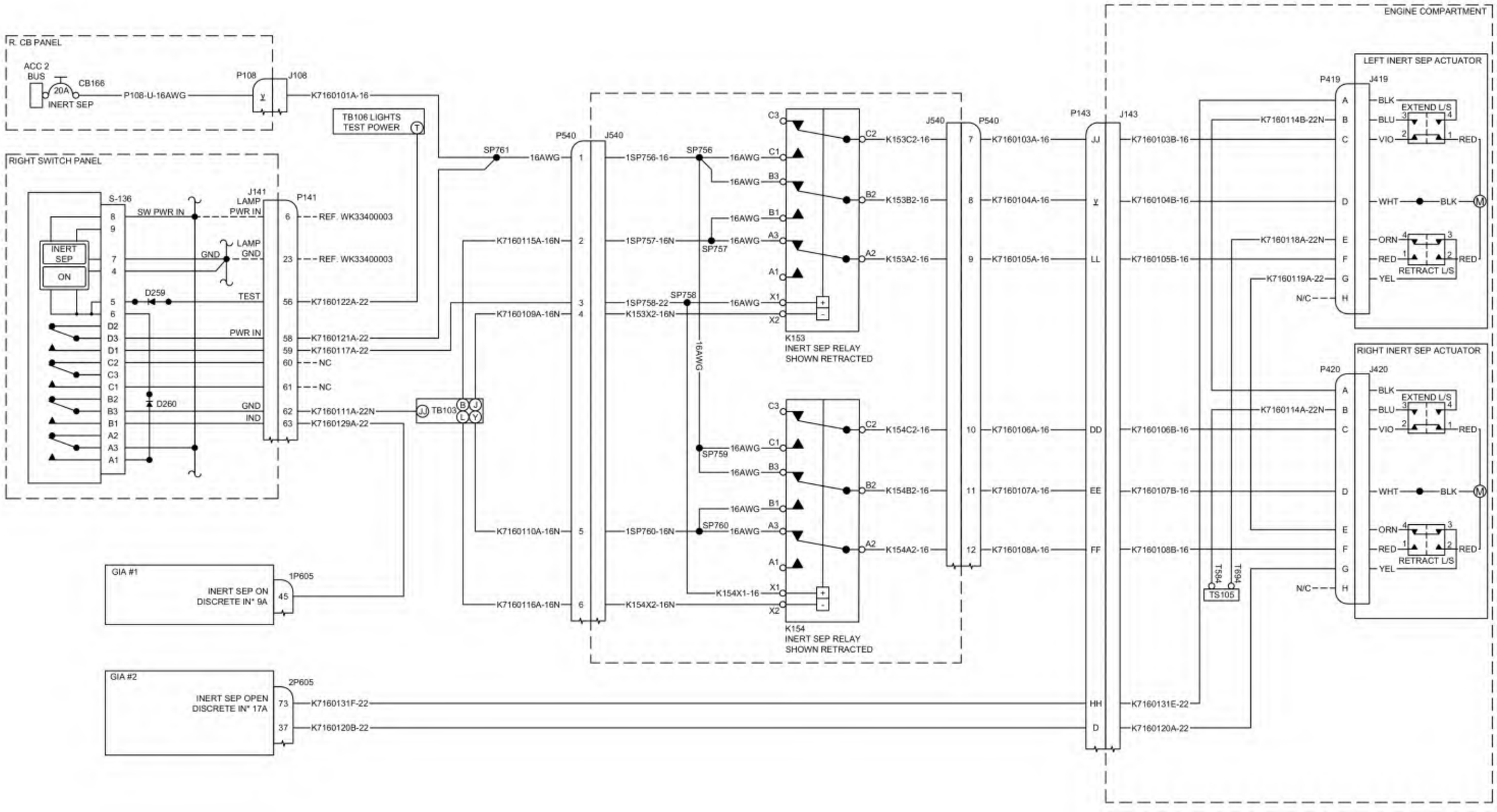

Figure 71-60.2: WK71601001-- (Sheet 1 of 2) Inertial Separator (SN: K003-K010 with SB-0017)

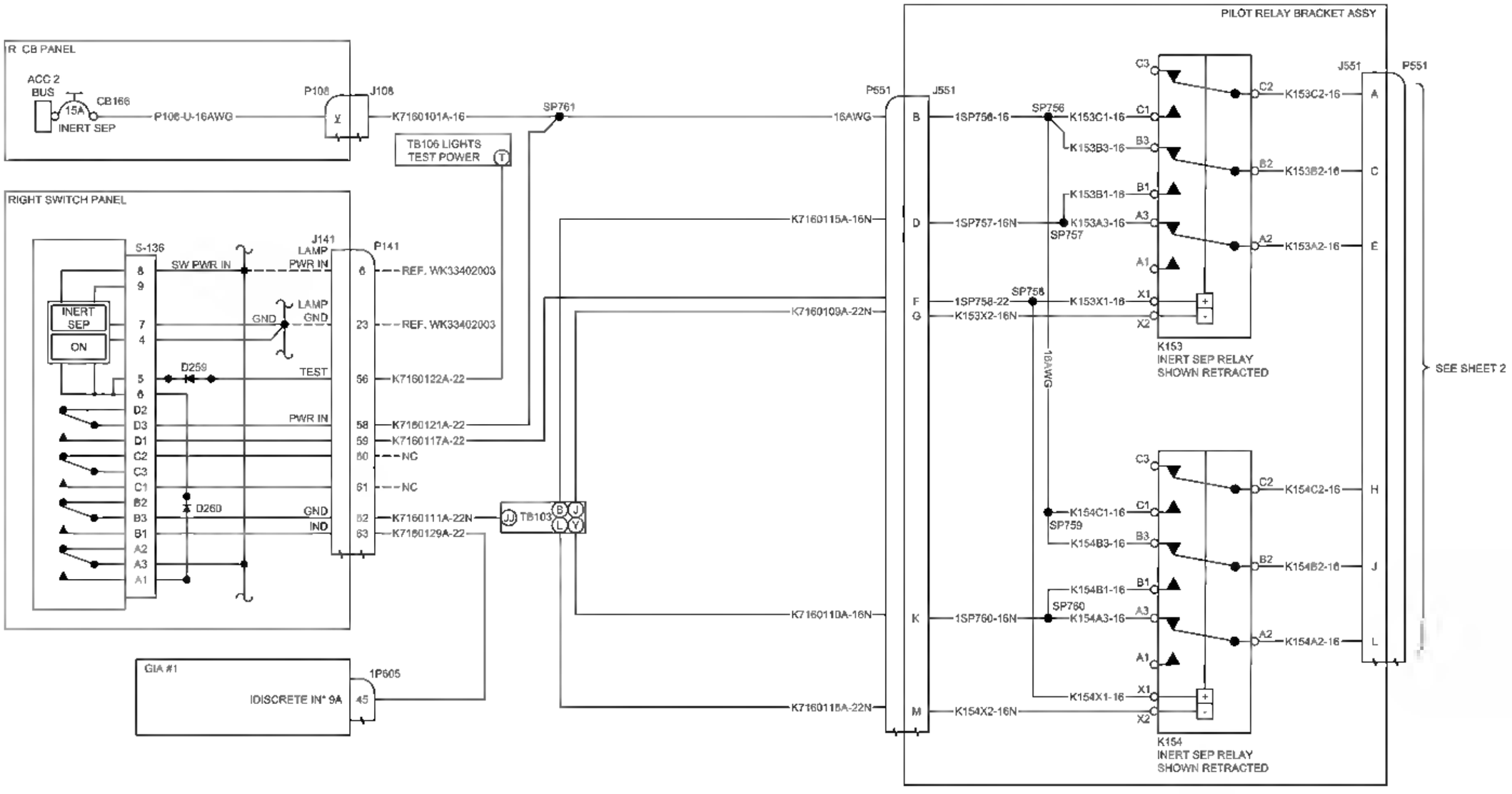

Figure 71-60.2:WK71601001-- (Sheet 2 of 2) Inertial Separator (SN: K003-K010 with SB-0017)

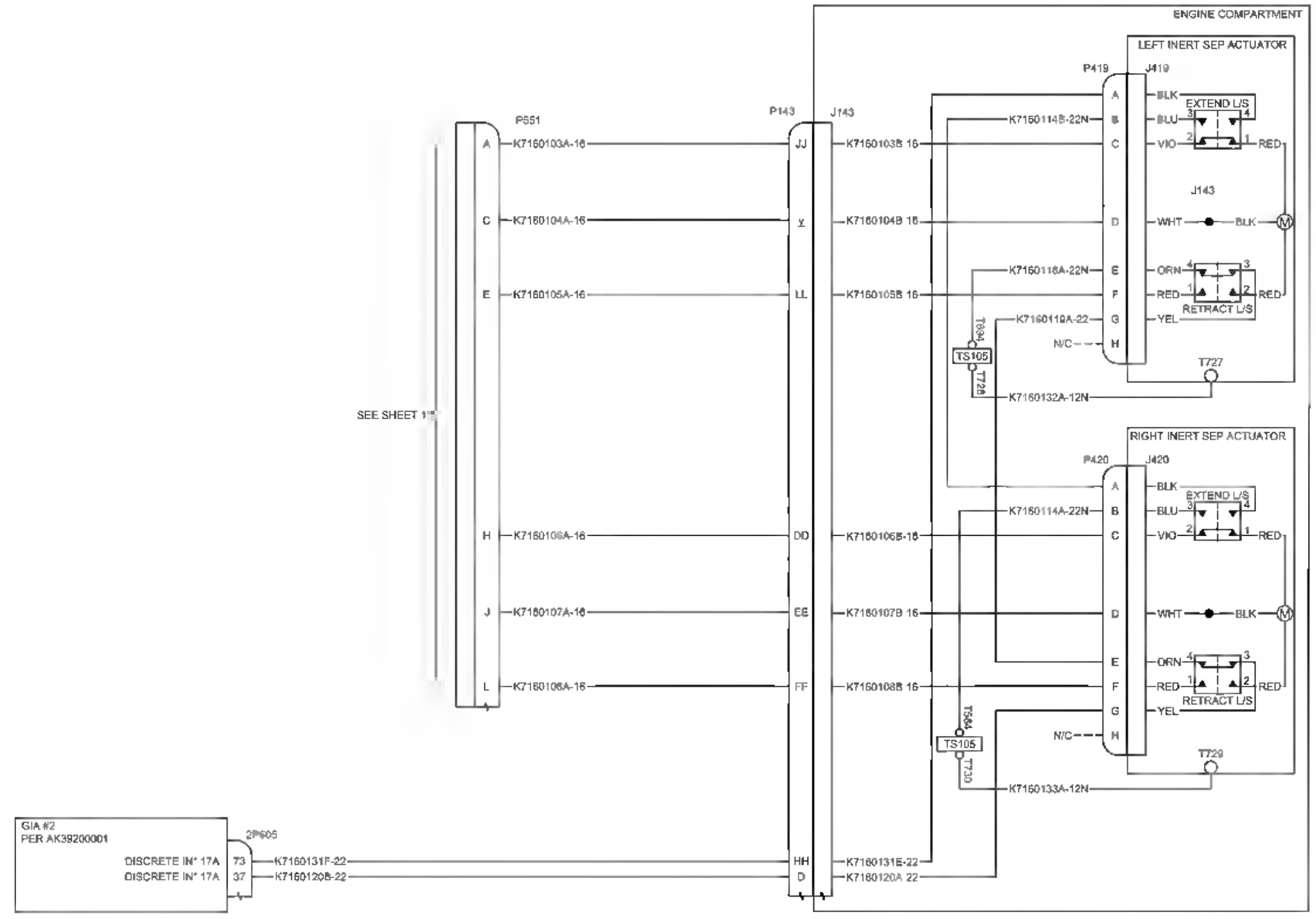

Figure 71-60.3: WK71602001-- (Sheet 1 of 2) Inertial Separator (SN: K011 and On)

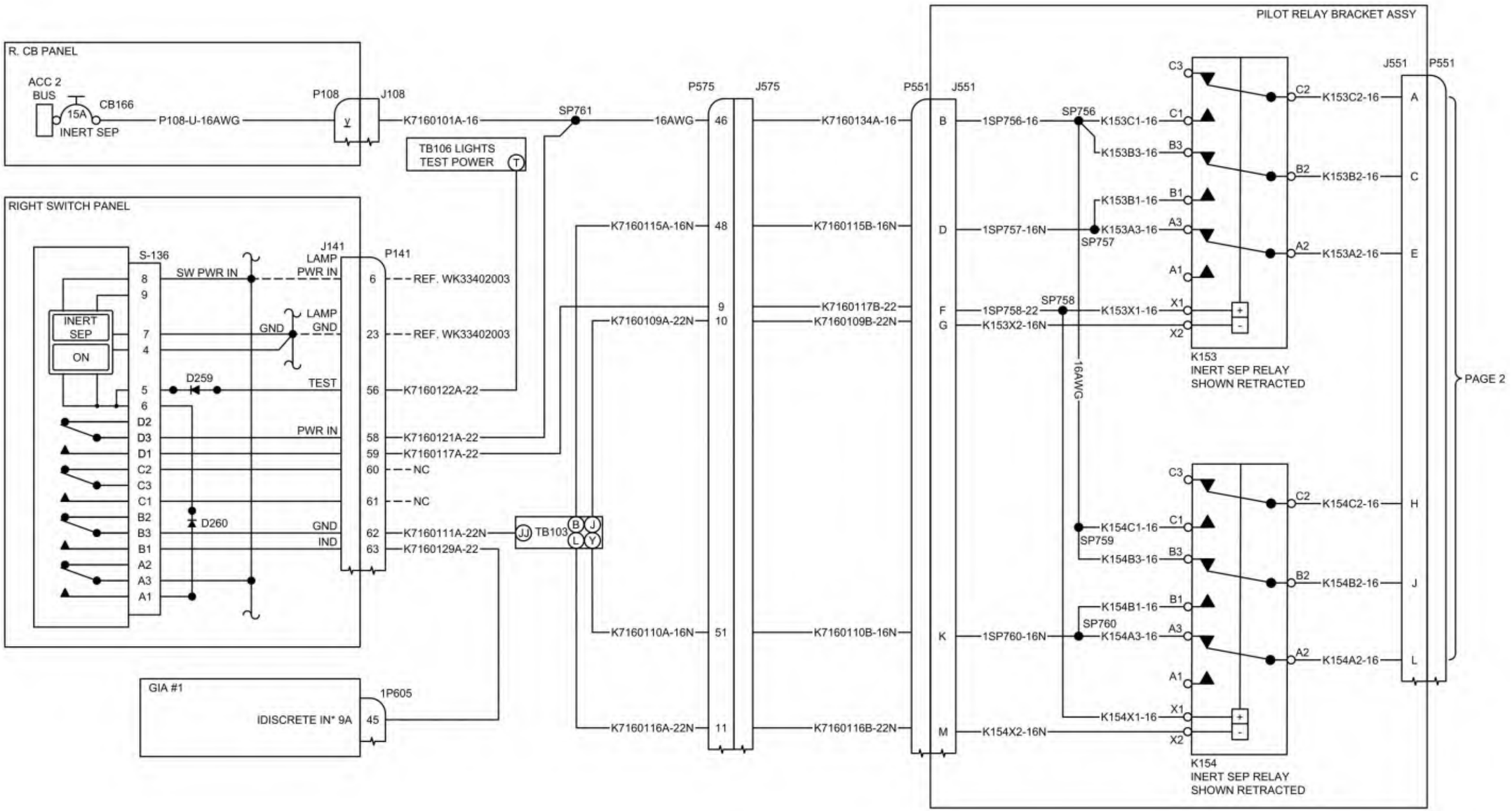

Figure 71-60.3: WK71602001-- (Sheet 2 of 2) Inertial Separator (SN: K011 and On)

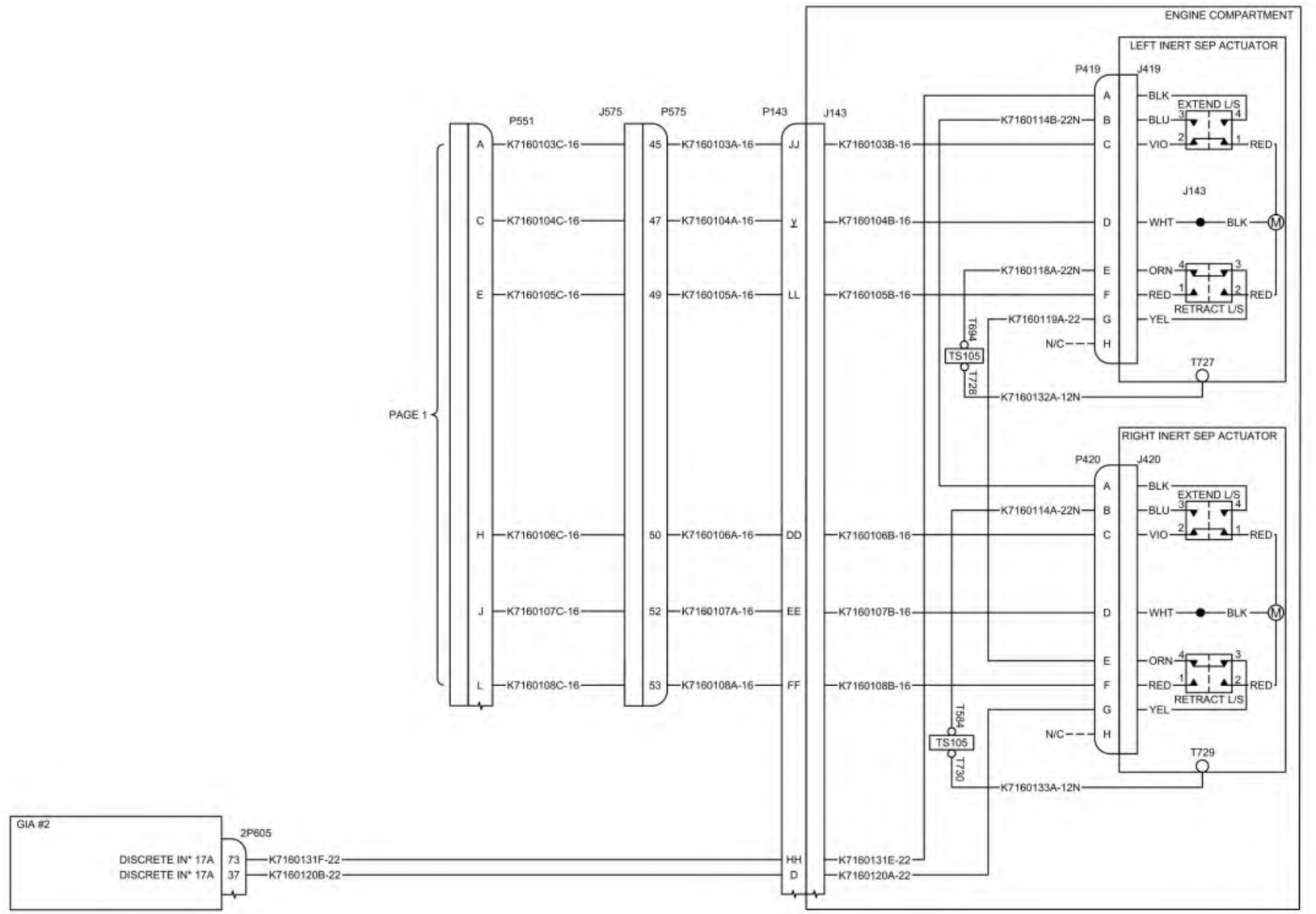

This Page Intentionally Left Blank

CHAPTER
77

Engine Indicating

This Page Intentionally Left Blank

List of Effective Pages

Chapter/Section	Page Number	Effective Date
77-Title	Page 1	02 Jan 2020
77-Title	Page 2	02 Jan 2020
77-LOEP	Page 1	02 Jan 2020
77-LOEP	Page 2	02 Jan 2020
77-TOC	Page 1	02 Jan 2020
77-TOC	Page 2	02 Jan 2020
77-00	Page 1	02 Jan 2020
77-00	Page 2	02 Jan 2020
77-40	Page 1	02 Jan 2020
77-40	Page 2	02 Jan 2020
77-40	Page 3	02 Jan 2020
77-40	Page 4	02 Jan 2020

This Page Intentionally Left Blank

CHAPTER 77

Table of Contents

List of Effective Pages ..... 77-LOEP / Page 1
Table of Contents ..... 77-TOC / Page1

Paragraph **Page Number**

Doors

1. General ..... 77-00 / Page 1

Integrated Engine Instrument Systems

Figure 77-40.1: WK77400001-1 Engine Instruments (Sheet 1 of 4) ..... 77-40 / Page 1

This Page Intentionally Left Blank

ENGINE INDICATING

1. General

Two tachometer generators on the engine and a tachometer generator adapter behind the instrument panel give engine data to the Garmin Integrated Cockpit System through the Garmin GEA 71B.

The Garmin GEA 71B Engine and Airframe Interface is a micro-processor based input/output component used to monitor sensor inputs and drive annunciator outputs for aircraft airframe and engine systems that interfaces with the GIA 64Ws of the Garmin Integrated Cockpit system

This Page Intentionally Left Blank

Figure 77-40.1: WK77400001-1 Engine Instruments (Sheet 1 of 4)

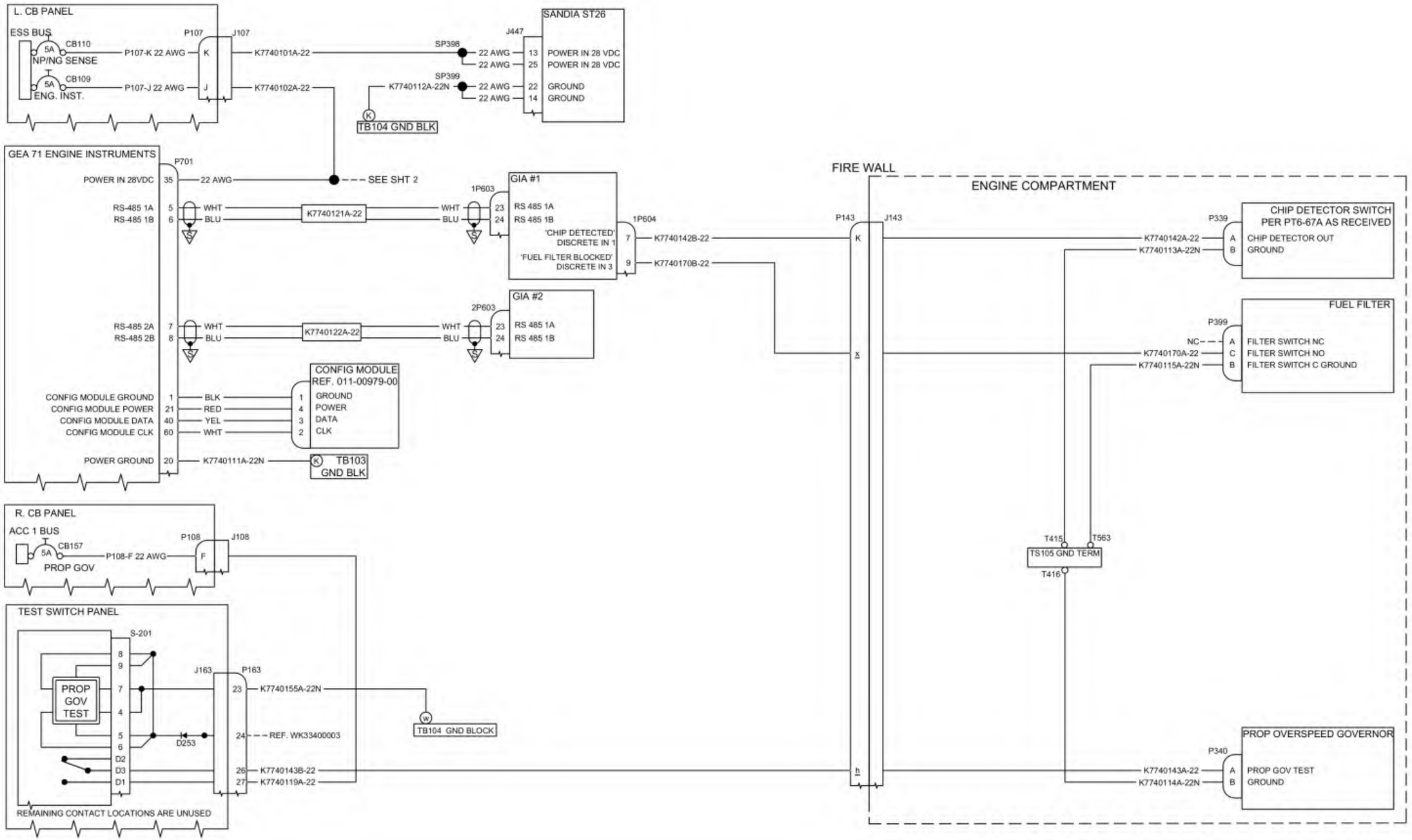

Figure 77-40.1: WK77400001-1 Engine Instruments (Sheet 2 of 4)

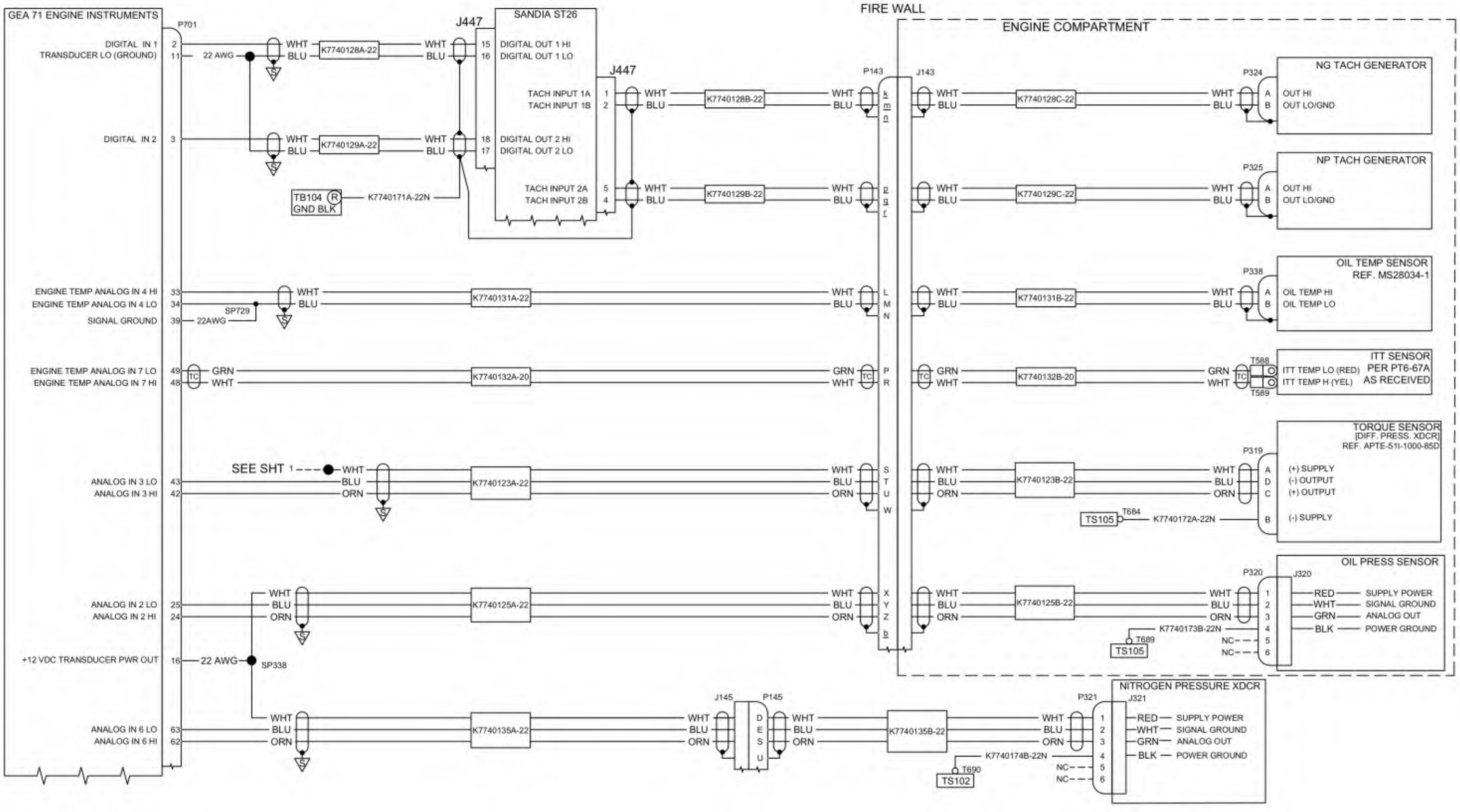

Figure 77-40.1: WK77400001-1 Engine Instruments (Sheet 3 of 4)

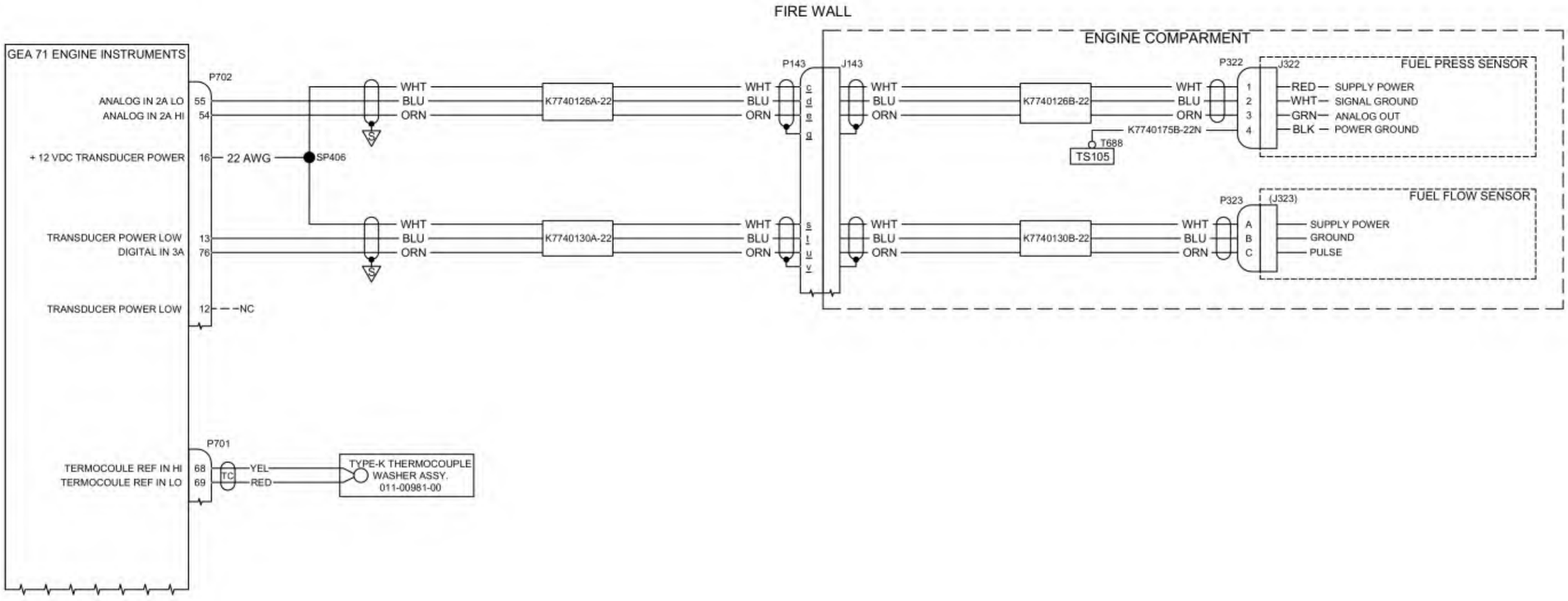

Figure 77-40.1: WK77400001-1 Engine Instruments (Sheet 4 of 4)

