

ILLUSTRATED PARTS CATALOG

For the
Epic E1000 and
E1000 *GX*

EPIC AIRCRAFT LLC
22590 Nelson Road
Bend, OR 97701-9710

COPYRIGHT 2019 EPIC AIRCRAFT LLC BEND, OREGON, USA
P/N SK05000004
ISSUED 03 Apr 2020

Log of Revisions

Revision Number	Issue Date
Original	03 Apr 2020
A	14 Jul 2021
B	13 Jan 2023
C	26 Mar 2024

Revision Number	Issue Date

Revision Number	Issue Date

This Page Intentionally Left Blank

CHAPTER 1

Introduction

This Page Intentionally Left Blank

Table of Contents
and
List of Effective Pages

Chapter/Section	Page Number	Effective Date
1-TOC & LOEP	Page 1	13 Jan 2023
1-TOC & LOEP	Page 2	03 Apr 2020
	General	
1-00	Page 1	14 Jul 2021
1-00	Page 2	13 Jan 2023
1-00	Page 3	03 Apr 2020
1-00	Page 4	03 Apr 2020
1-00	Page 5	03 Apr 2020
1-00	Page 6	03 Apr 2020

This Page Intentionally Left Blank

INTRODUCTION

1. General

This catalog provides a resource for identifying and ordering replacement and spare parts for the Epic Aircraft E1000 and E1000 *GX*. This catalog covers aircraft as delivered from the factory and as modified by Service Bulletins. The level of coverage includes parts that are considered normally replaceable.

WARNING: The figures in this catalog are for identifying parts and are not to be used as a maintenance reference for disassembly or reassembly of the airplane.

2. Organization

This catalog is set up according to guidelines established by the Air Transport Association of America (ATA) Specification 100. All parts of the catalog are divided into chapters. Chapters are divided, when necessary, into subsystems or sections that are sometimes divided into subjects.

3. Log of Revisions

A log of revisions is provided at the beginning of this catalog. When a revision is inserted into the catalog the revision number, date of issue, date inserted, and the initials of the person inserting the revision should be recorded on this log.

4. Effective Pages

The table of contents of each chapter of this catalog also indicates the revisions currently effective for that chapter.

5. Illustrated Parts Catalog Numbering System

The contents of this catalog is arranged and presented in the same Chapter and Section arrangement found in the Aircraft Maintenance Manual (AMM). The user can usually expect to find coverage of items in the AMM in the same Chapter/Section of the IPC. The numbering system employed in this catalog is composed of a five-digit number containing three elements: chapter, section and figure, xx-xx.x.

6. Figures

The location of each part is shown on a locator graphic of the aircraft or the subassembly the part is installed on. The installed position is indicated by an alphabetic designation in a circle with an arrow pointing to its installed location. The detail view for that part is indicated by the same alphabetic designation.



In most cases, only one view of identical left and right hand assemblies is represented graphically. It is indicated like this example: *(Left side shown, right side opposite.)*

The item number in the figure and the item number in the table are hyperlinked to each other for ease of use. When an item number appears in multiple pages of the same figure, the item number in the table is only be hyperlinked to the first instance of the item number in that figure. All hyperlinks in figures and tables are indicated by blue text.

7. Tables

The tables are divided into the following columns: Figure Item Number, Part Number, Part Name, Effectivity Code, and Amount in Assy.

Figure Item Number: The numerical designation for that part in the relevant figure(s). When an item number is not shown in the figure, is an alternate part number, or has an associated note, it is indicated by an asterisk (*) next to the figure item number.

Part Number: Part numbers beginning with *PK* or *AK* are manufactured by Epic Aircraft for the E1000 only and must be purchased through Epic Aircraft or an authorized service center.

Epic Aircraft, LLC
22590 Nelson Road
Bend, Oregon 97701

888.FLY.EPIC
https://epicaircraft.com/customer-support/
customersupport@epicaircraft.com
Main: 541.318.8849
Sales Direct: 541.639.4602
Fax: 541.382.5125

Part Name: A detailed description of the part is given to help with identification. The Component Maintenance Manual (CMM) part number will be listed here when needed for identifying parts of a manufactured assembly.

Effectivity Code: The aircraft effectivity of a part will be listed as the aircraft serial number range it applies to. For example: (*K003 and On*, or *K003 - K010 with SB-0017*)

Amount in Assy.: This amount is the total quantity of that part shown in that figure or series of figures.

8. Illustrated Parts Catalog Chapters

Chapter Title	Chapter No.
Introduction	1
Placards and Markings	11
Environmental Systems	21
Auto Flight	22
Communications	23
Electrical Power	24
Equipment and Furnishings	25
Fire Protection	26
Flight Controls	27
Fuel	28
Hydraulic Power	29
Ice and Rain Protection	30
Indicating/Recording Systems	31
Landing Gear	32
Lights	33
Navigation	34
Oxygen	35
Electrical Panels and Multipurpose Components	39
Doors	52
Fuselage	53
Stabilizers	55
Windows	56
Wings	57
Propeller	61
Powerplant	71
Ignition	74
Engine Controls	76
Engine Indicating	77
Exhaust	78
Oil	79

9. Revision Service

Revision Service for this manual is available from Epic Aircraft Technical Publications.

Epic Aircraft
22590 Nelson Rd.
Bend, OR 97701
Phone: (541) 318-8849

A. Revisions

Revisions to this catalog will be issued periodically. Revised pages are assigned a revision letter or number to distinguish them from past or future revisions. Revisions are printed on white paper.

Incorporate revisions into the manual as soon as possible after receiving them. Record receipt and disposition of the revision in the Log of Revisions.

B. Temporary Revisions

Temporary revisions are issued for time sensitive changes to the manual. Temporary revisions are printed on blue paper.

Incorporate temporary revisions into the manual as soon as possible after receiving them. Record receipt and disposition of the temporary revision in the Log of Temporary Revisions. When the temporary revision is superseded by incorporation of a scheduled revision, the temporary revision is removed from the manual and appropriate notations are made in the log.

C. Revision Bars

Changes to text and figures in the manual will be indicated by revision bars in the outer margin of the page adjacent to where the changes occurs.

CHAPTER 11

Placards and Markings

This Page Intentionally Left Blank

List of Effective Pages

Chapter/Section	Page Number	Effective Date
11-Title	Page 1	03 Apr 2020
11-Title	Page 2	03 Apr 2020
11-LOEP	Page 1	26 Mar 2024
11-LOEP	Page 2	03 Apr 2020
11-TOC	Page 1	03 Apr 2020
11-TOC	Page 2	03 Apr 2020
Exterior Placards and Markings		
11-20	Page 1	26 Mar 2024
11-20	Page 2	26 Mar 2024
11-20	Page 3	26 Mar 2024
11-20	Page 4	26 Mar 2024
11-20	Page 5	26 Mar 2024
11-20	Page 6	26 Mar 2024
Interior Placards and Markings		
11-30	Page 1	03 Apr 2020
11-30	Page 2	26 Mar 2024
11-30	Page 3	14 Jul 2021
11-30	Page 4	14 Jul 2021
11-30	Page 5	14 Jul 2021
11-30	Page 6	03 Apr 2020
11-30	Page 7	03 Apr 2020
11-30	Page 8	26 Mar 2024
11-30	Page 9	26 Mar 2024
11-30	Page 10	26 Mar 2024
11-30	Page 11	26 Mar 2024
11-30	Page 12	26 Mar 2024
11-30	Page 13	26 Mar 2024
11-30	Page 14	26 Mar 2024
11-30	Page 15	26 Mar 2024
11-30	Page 16	26 Mar 2024
11-30	Page 17	26 Mar 2024
11-30	Page 18	26 Mar 2024
11-30	Page 19	26 Mar 2024
11-30	Page 20	26 Mar 2024

This Page Intentionally Left Blank

CHAPTER 11

Table of Contents

List of Effective Pages ..... 11-LOEP / Page 1
Table of Contents ..... 11-TOC / Page1

Paragraph **Page Number**

Exterior Placards

Figure 11-20.1: Exterior Placards ..... 11-20 / Page 1
Table 11-20.1: Exterior Placards ..... 11-20 / Page 5

Interior Placards

Figure 11-30.1: Interior Placards - Flight Compartment ..... 11-30 / Page 1
Table 11-30.1: Interior Placards - Flight Compartment ..... 11-30 / Page 9
Figure 11-30.2: Interior Placards - Passenger Compartment ..... 11-30 / Page 11
Table 11-30.2: Interior Placards - Passenger Compartment ..... 11-30 / Page 19

This Page Intentionally Left Blank

EXTERIOR PLACARDS AND MARKINGS

Figure 11-20.1: Exterior Placards

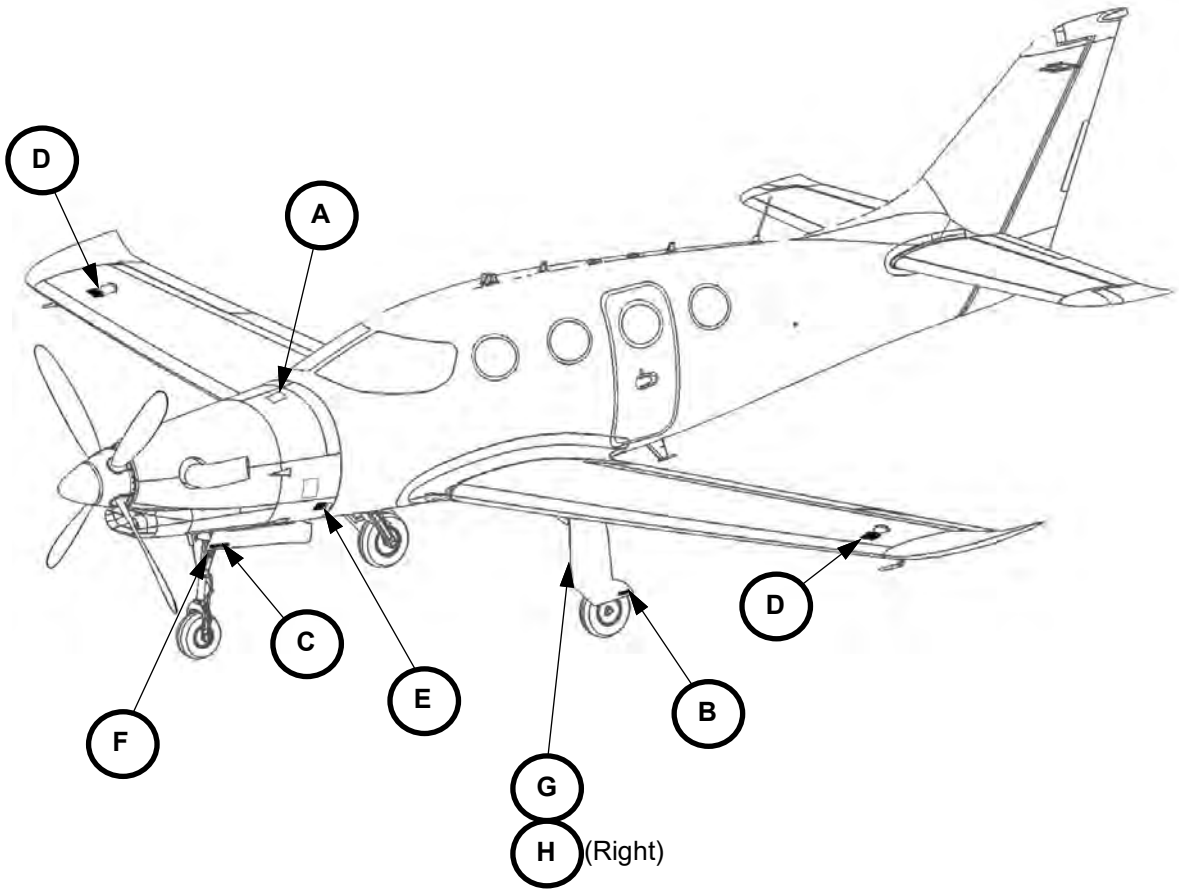



10
English



10
Portuguese

A

Figure 11-20.1: Exterior Placards (Continued)



20
English



20
Portuguese

B



30
English



30
Portuguese

C

Figure 11-20.1: Exterior Placards (Continued)



40
English



40
Portuguese

D



50

E

Figure 11-20.1: Exterior Placards (Continued)

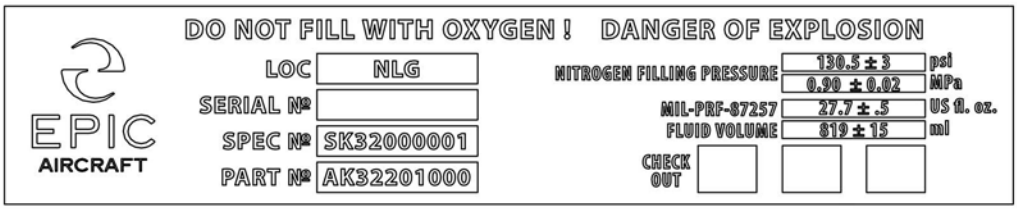

60

F

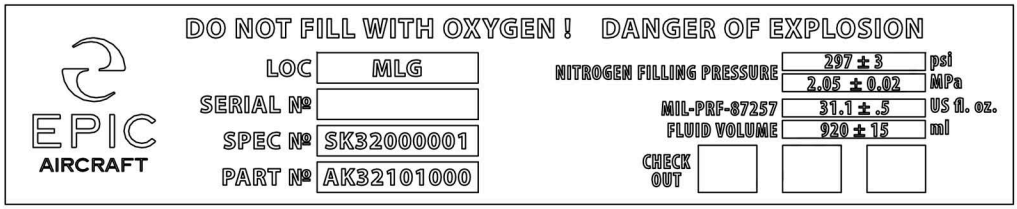

70

G (Left)

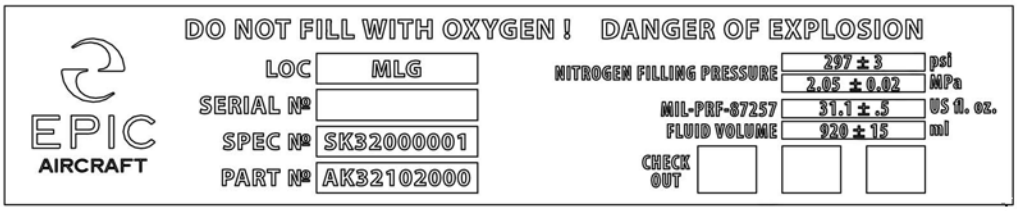

80

H (Right)

Table 11-20.1: Exterior Placards

Figure Item Number	Part Number	Part Name	Effectivity Code	Amount in Assy.
10	PK11200001	Placard, Oil Filler	K003 and On	1
	PK11210001	Placard, Oil Filler (Portuguese)	K003 and On	1
20	PK11200005	Placard, Main Tire PSI (Black)	K003 and On	2
	PK11200006	Placard, Main Tire PSI (White)	K003 and On	2
	PK11210005	Placard, Main Tire PSI (Black) (Portuguese)	K003 and On	2
	PK11210006	Placard, Main Tire PSI (White) (Portuguese)	K003 and On	2
30	PK11200007	Placard, Nose Tire PSI (Black)	K003 and On	2
	PK11200004	Placard, Nose Tire PSI (White)	K003 and On	2
	PK11210007	Placard, Nose Tire PSI (Black) (Portuguese)	K003 and On	2
	PK11210004	Placard, Nose Tire PSI (White) (Portuguese)	K003 and On	2
40	PK11200008	Placard, Fuel, LH/RH Wing (Black)	K003 and On	2
	PK11200009	Placard, Fuel, LH/RH Wing (White)	K003 and On	2
	PK11210008	Placard, Fuel, LH/RH Wing (Black) (Portuguese)	K003 and On	2
	PK11210009	Placard, Fuel, LH/RH Wing (White) (Portuguese)	K003 and On	2
50	PK11200012	Placard, Ground Power Supply	K003 and On	1
60	PK32201021	NLG Placard	K003 and On	1
70	PK32101008	MLG Placard, Left	K003 and On	1
80	PK32102001	MLG Placard, Right	K003 and On	1

This Page Intentionally Left Blank

INTERIOR PLACARDS AND MARKINGS

Figure 11-30.1: Interior Placards - Flight Compartment

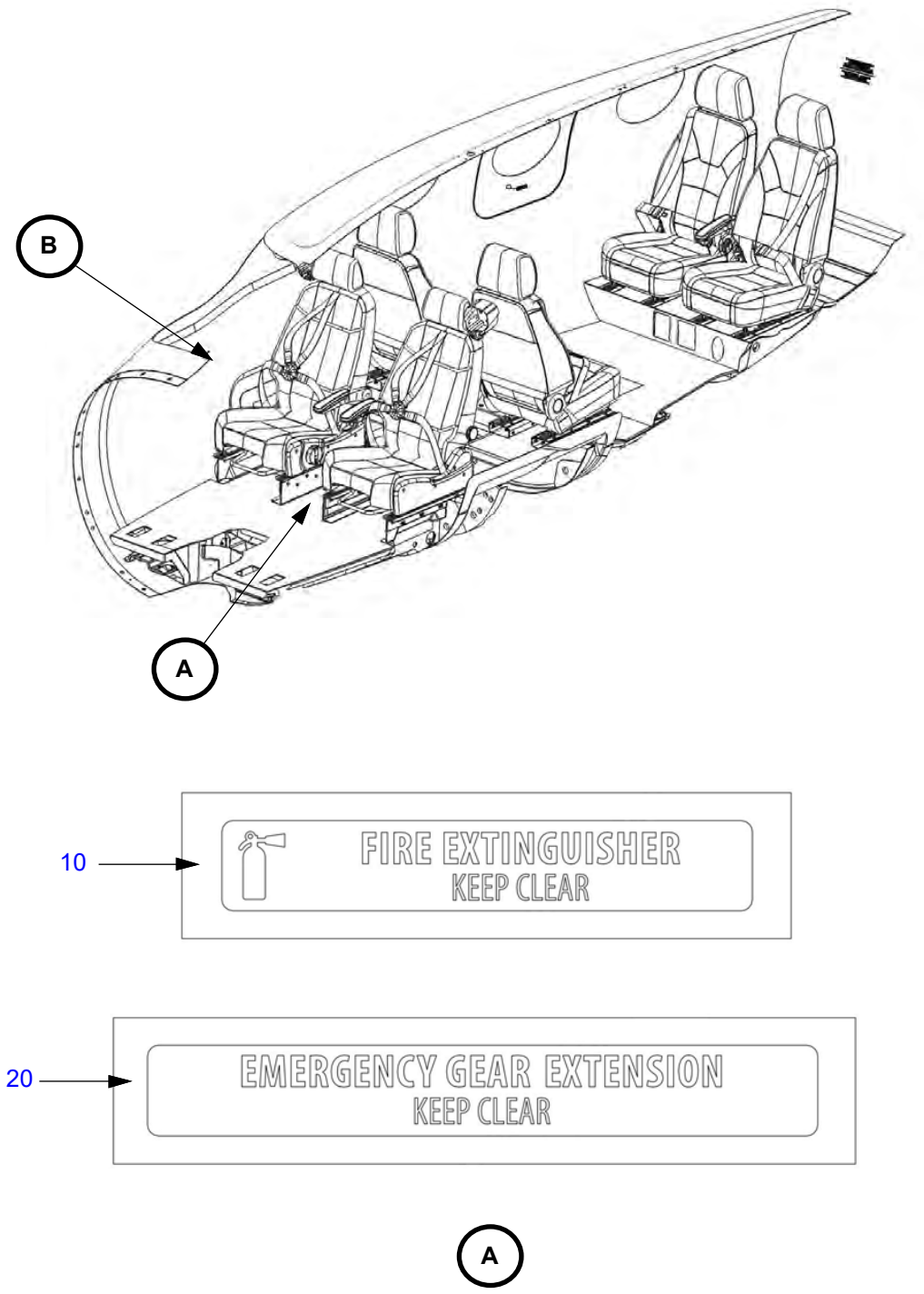

Figure 11-30.1: Interior Placards - Flight Compartment (Continued)

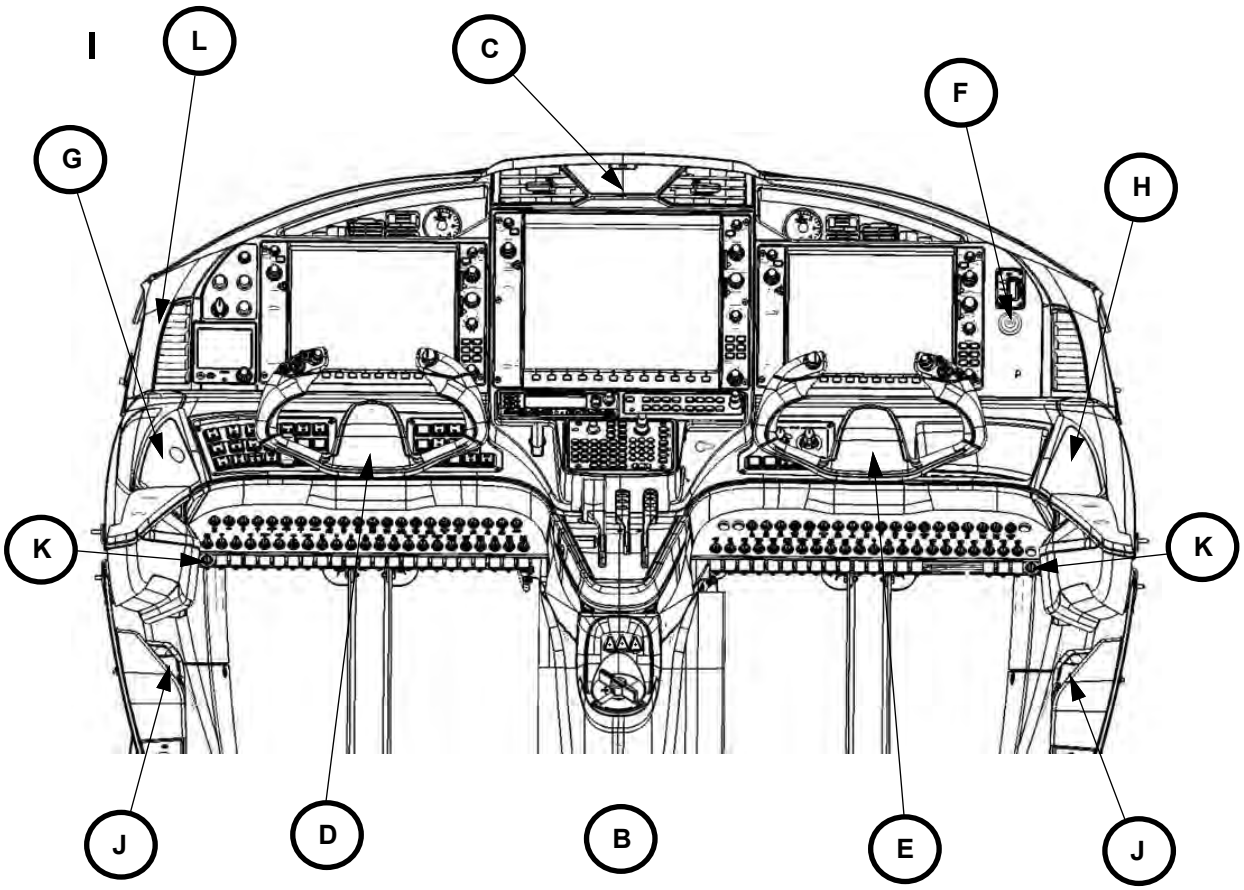

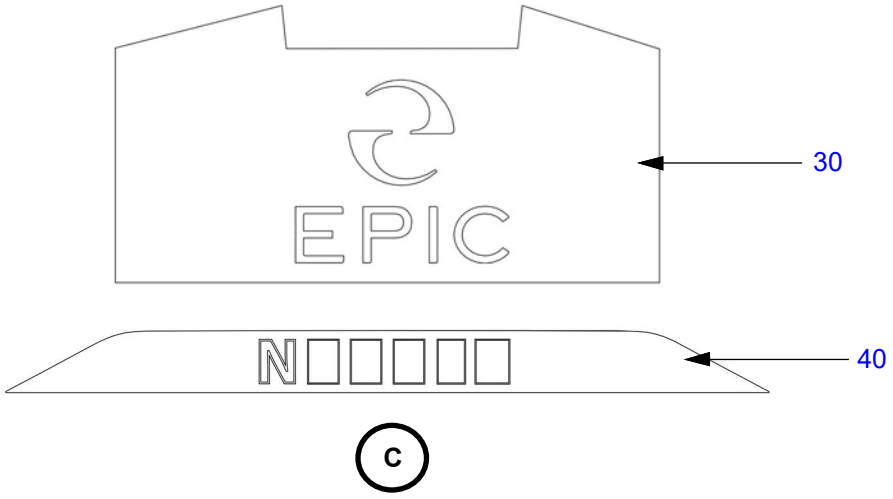

Figure 11-30.1: Interior Placards - Flight Compartment (Continued)

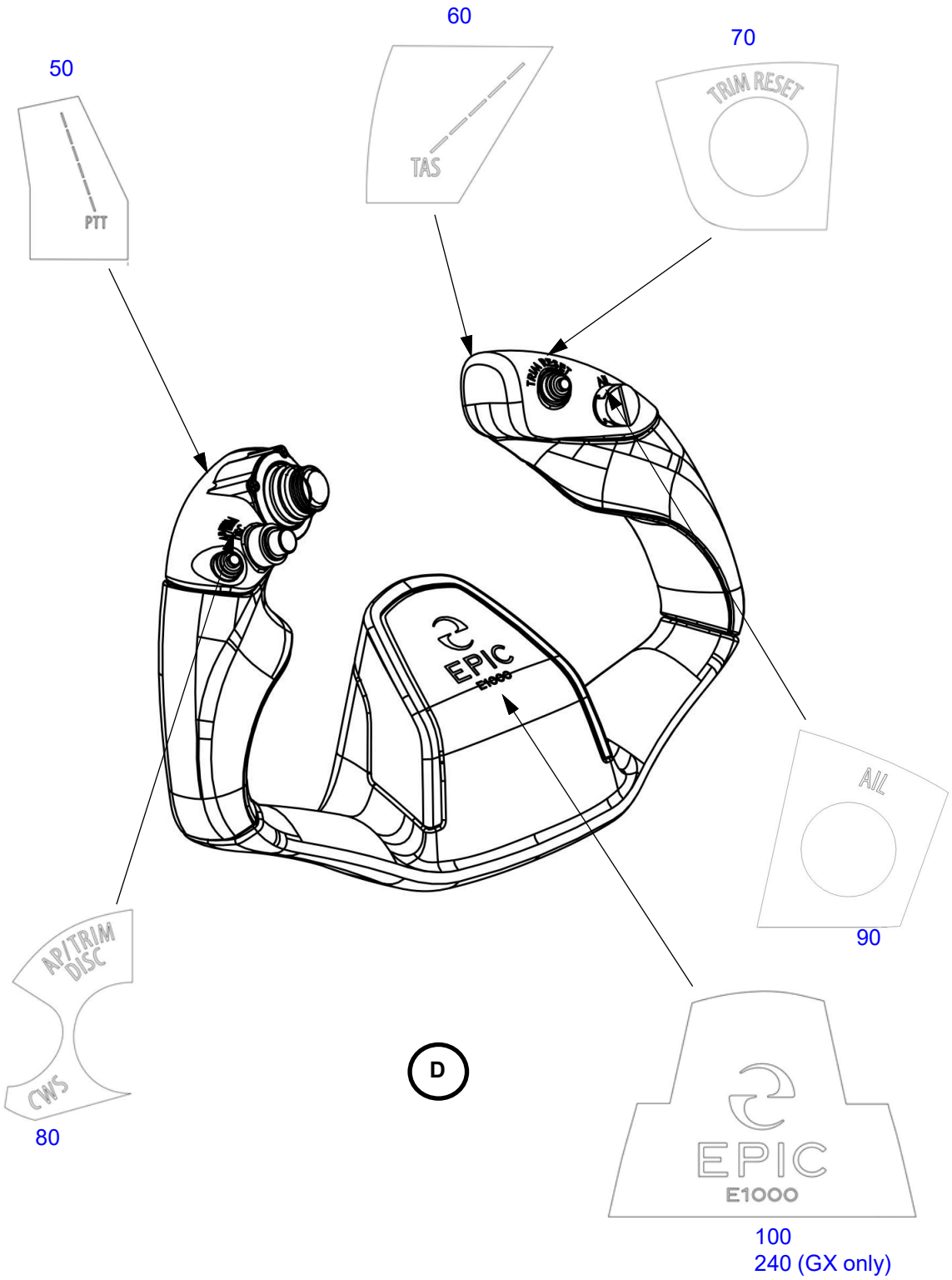

Figure 11-30.1: Interior Placards - Flight Compartment (Continued)

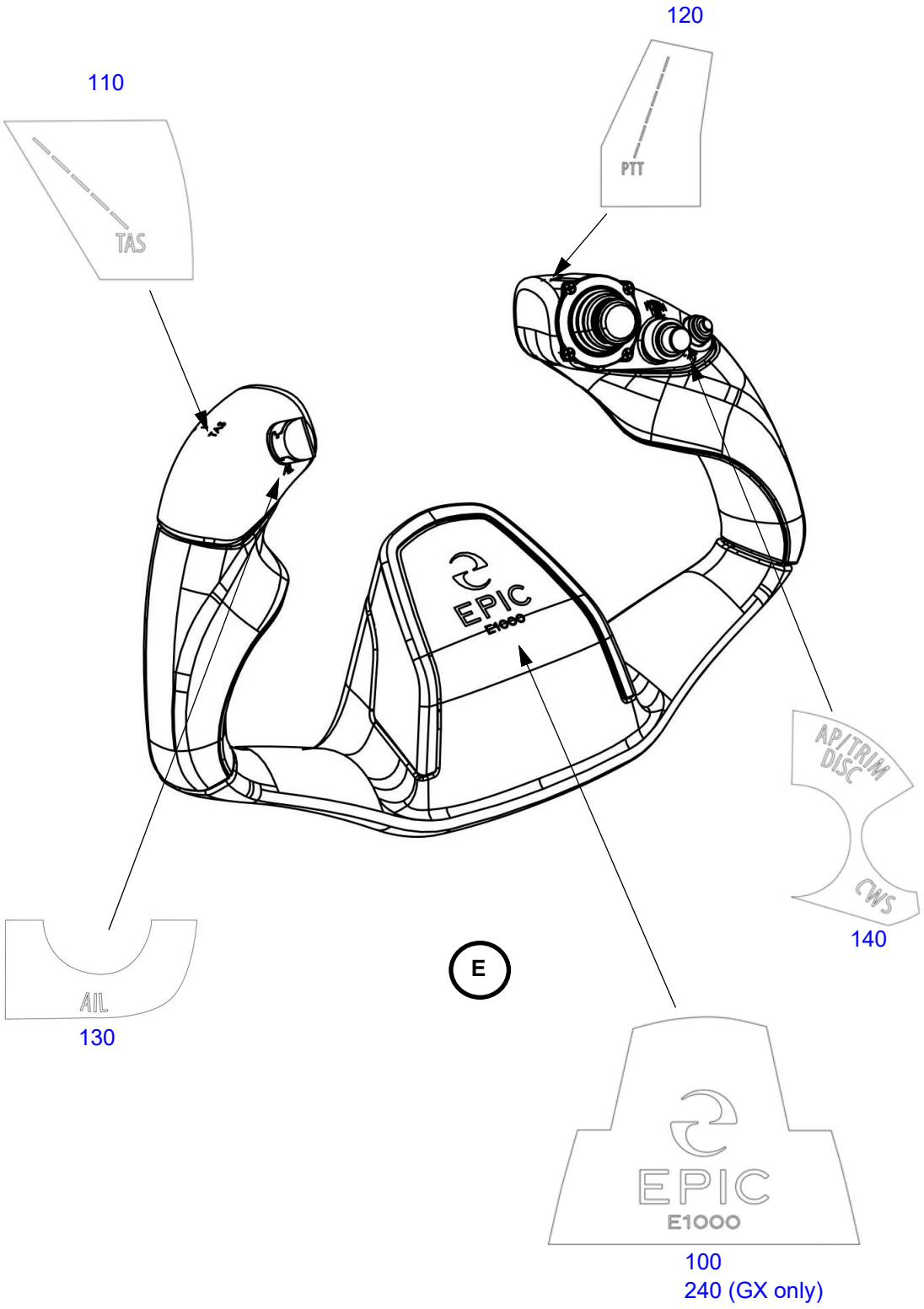

Figure 11-30.1: Interior Placards - Flight Compartment (Continued)

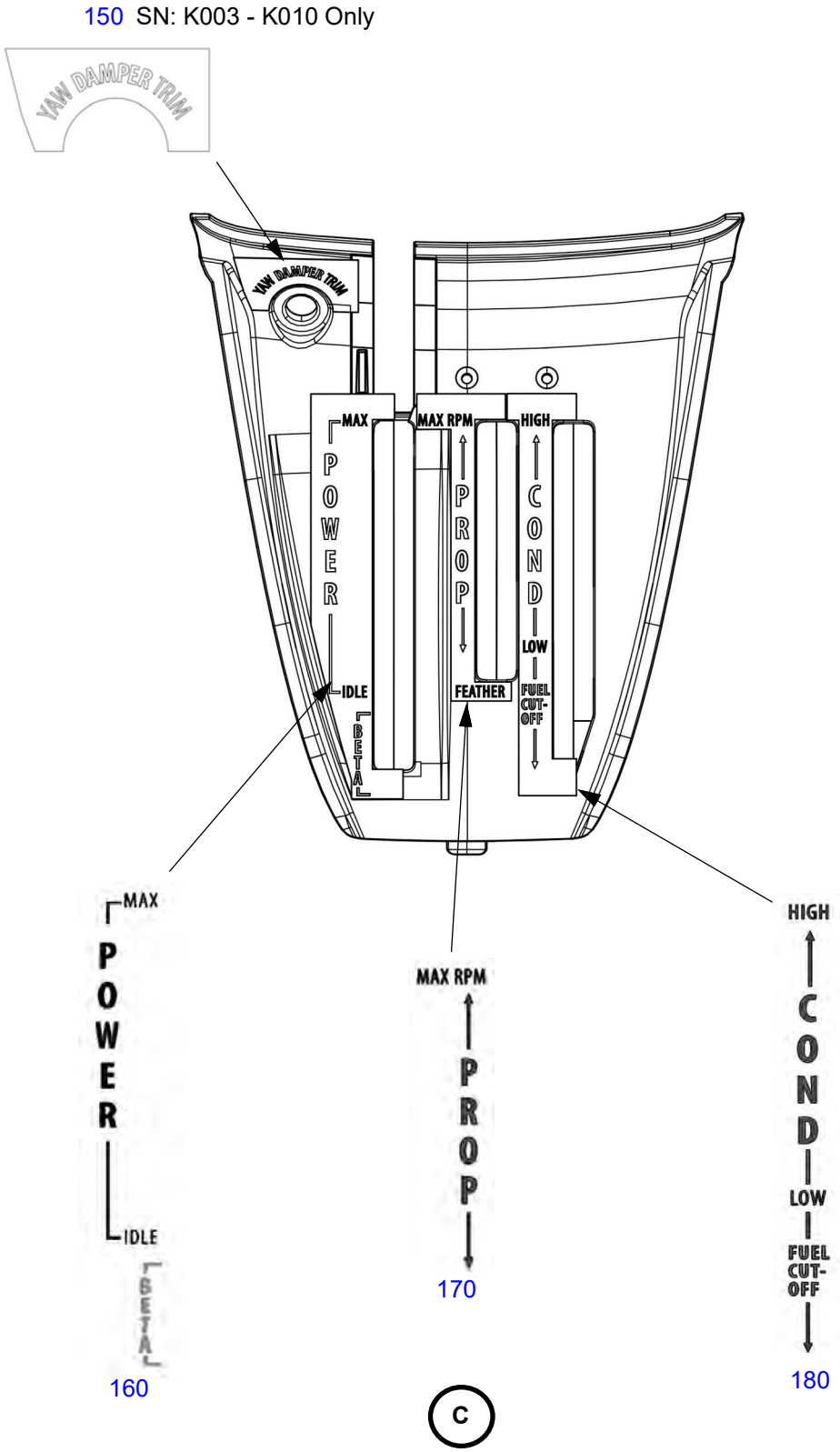

Figure 11-30.1: Interior Placards - Flight Compartment (Continued)

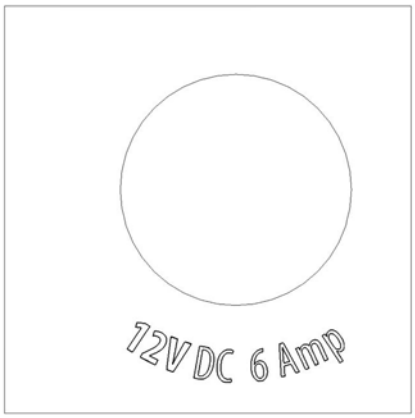

190

F

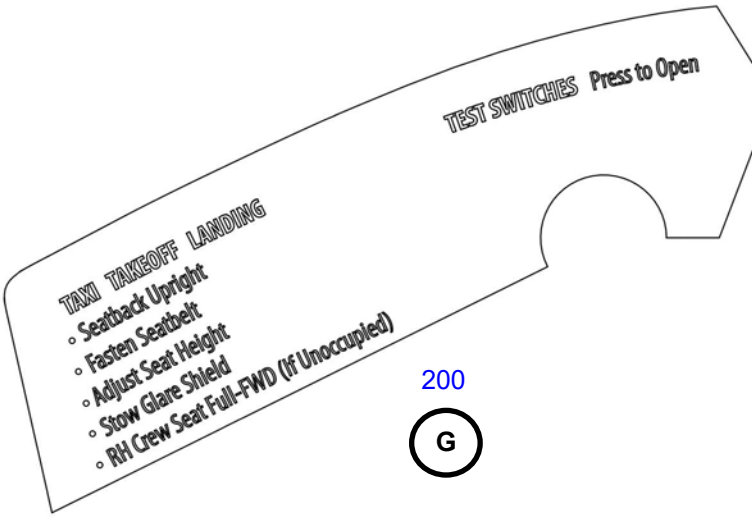

200

G



210

H

Figure 11-30.1: Interior Placards - Flight Compartment (Continued)

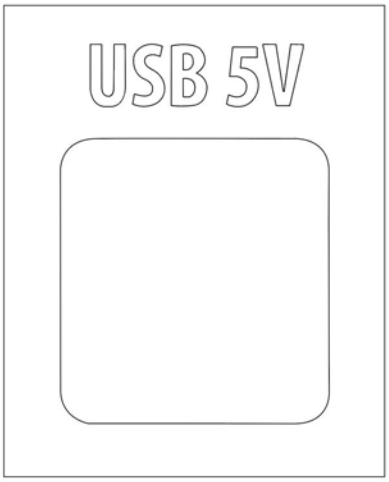

220

J

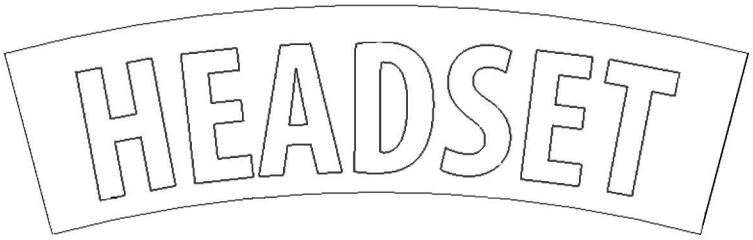

230

K

Figure 11-30.1: Interior Placards - Flight Compartment (Continued)

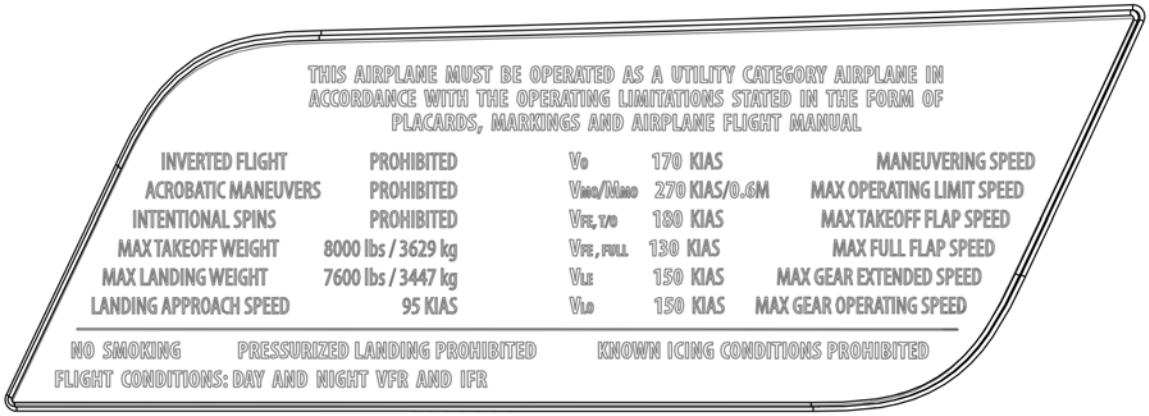

250

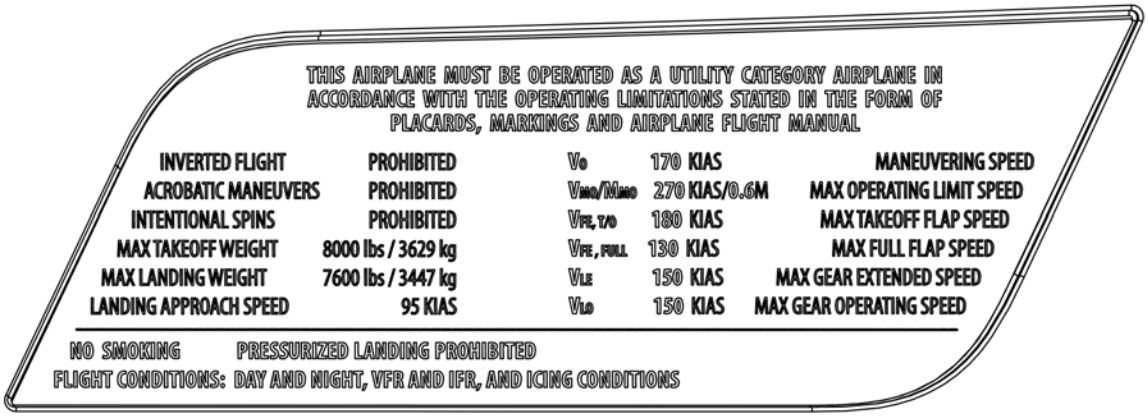

260

L

Table 11-30.1: Interior Placards - Flight Compartment

Figure Item Number	Part Number	Part Name	Effectivity Code	Amount in Assy.
10	PK11300007	Placard, Fire Extinguisher	K003 and On	1
20	PK11300008	Placard, Nitrogen Gear Extension Pull Door	K003 and On	1
30	PK11300001	Placard, Center Panel Epic Marque	K003-K010	1
40	PK11300004	Placard, Center Panel N Number	K003 and On	1
50	PK11300069	Placard, Push to Talk, Pilot's Yoke	K003 and On	1
60	PK11300079	Placard, Pilot, TAS	K003 and On	1
70	PK11300076	Placard, Trim Reset, Control Yoke, Pilot	K003 and On	1
80	PK11300071	Placard APD and CWS, Pilot's Yoke	K003 and On	1
90	PK11300067	Placard, Aileron Trim, Pilot's Yoke	K003 and On	1
100	PK11300075	Placard, Pilot's Epic Marque	K003 and On	2
110	PK11300078	Placard, Co-pilot, TAS	K003 and On	1
120	PK11300070	Placard, Push to Talk, Co-pilot's Yoke	K003 and On	1
130	PK11300068	Placard, Aileron Trim, Co-pilot's Yoke	K003 and On	1
140	PK11300080	Placard APD and CWS, Co-pilot's Yoke	K003 and On	1
150	PK11300020	Placard, Yaw Damp Knob	K003 - K010	1
160	PK11300017	Placard, Power	K003 and On	1
170	PK11300018	Placard, Prop	K003 and On	1
180	PK11300019	Placard, Condition	K003 and On	1
190	PK11300038	Placard, Co-pilot's 12 Volt DC 20 Amp	K003 and On	1
200	PK11300032	Placard, Test Switch Cover	K003 and On	1
210	PK11300086	Placard. Cover, Snap-in	K003 and On	1
220	PK11300033	Placard, USB, Pilot/Co-pilot	K003 and On	2
230	PK11300037	Placard, Crew Headset, Pilot and Co-pilot	K003 and On	2

Figure Item Number	Part Number	Part Name	Effectivity Code	Amount in Assy.
240	PK11300175	Placard, Pilot's Epic Marque, GX	K011 and On*	2
250	PK11300006	Placard, Operations Limitations	K003 - K055**	1
260	PK11300016	Placard, Operations Limitations, FIKI	K056 and On***	1

* (Also SN:K003-K010 with SB-0017)
** (Without SB-0035)
*** (Also SN: K003-K055 with SB-0035)

Figure 11-30.2: Interior Placards - Passenger Compartment

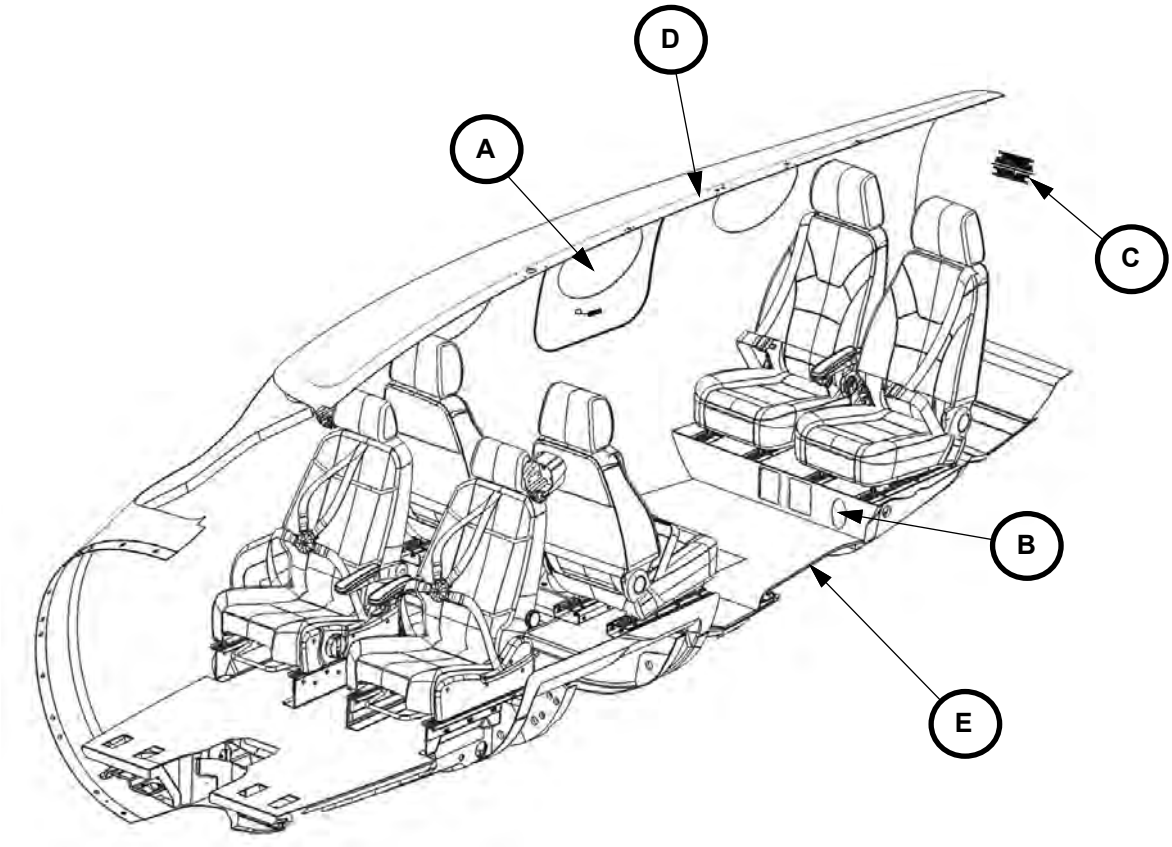

Figure 11-30.2: Interior Placards - Passenger Compartment (Continued)

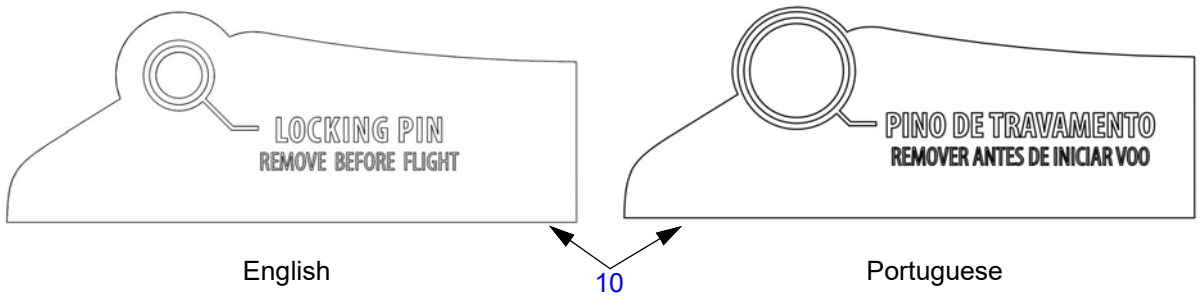

English 10 Portuguese

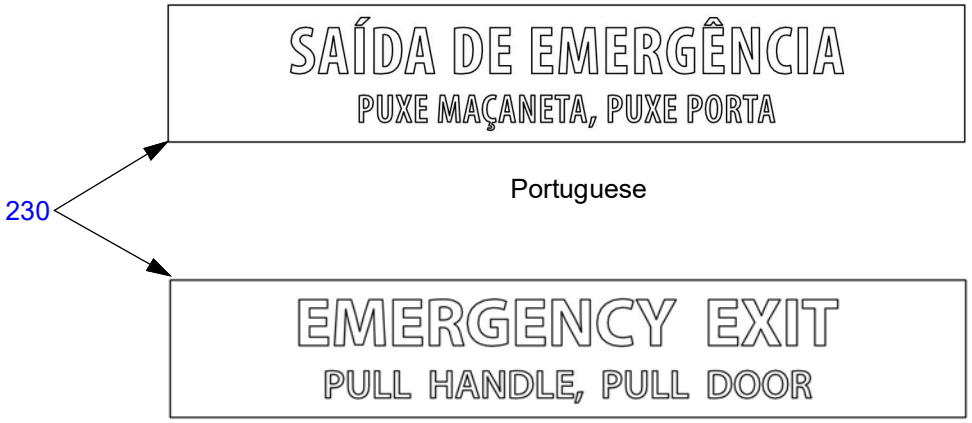

Portuguese

230

English



Portuguese

20



English

A

Figure 11-30.2: Interior Placards - Passenger Compartment (Continued)

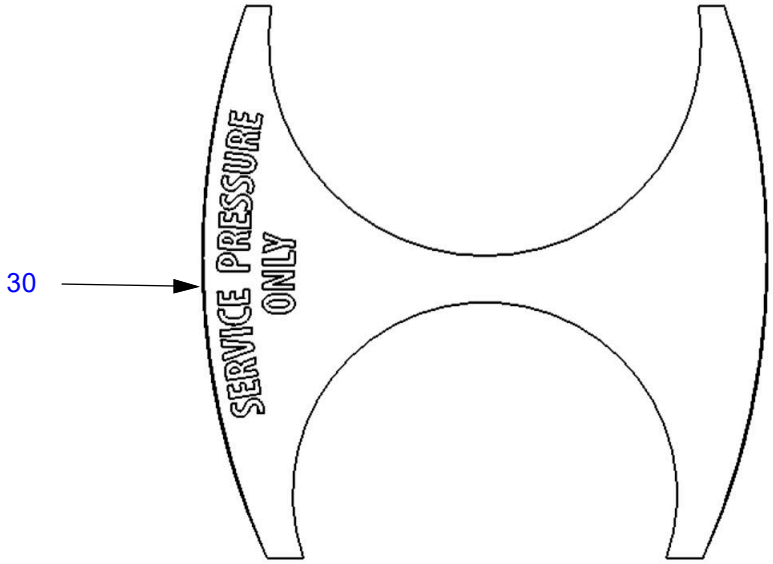

B1

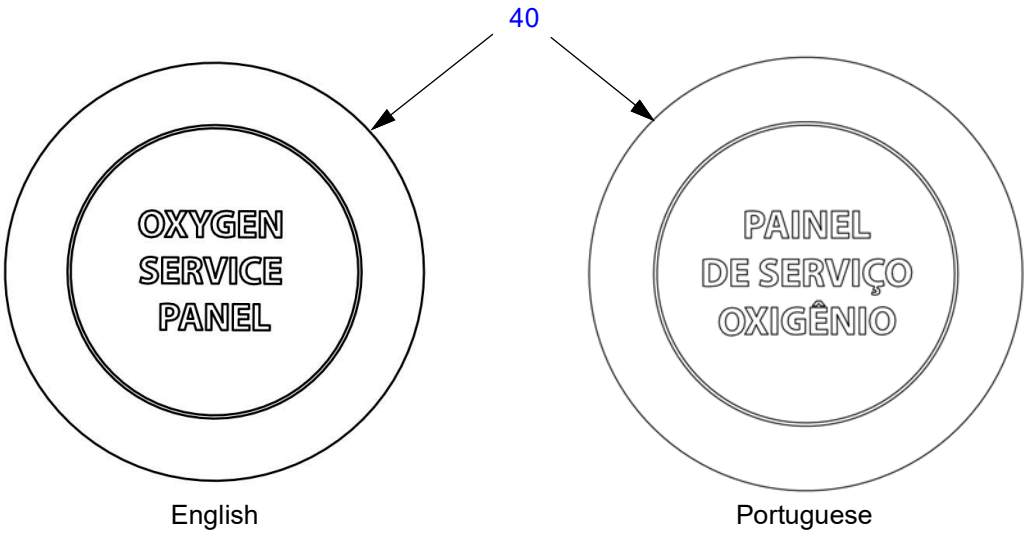

B2

Figure 11-30.2: Interior Placards - Passenger Compartment (Continued)

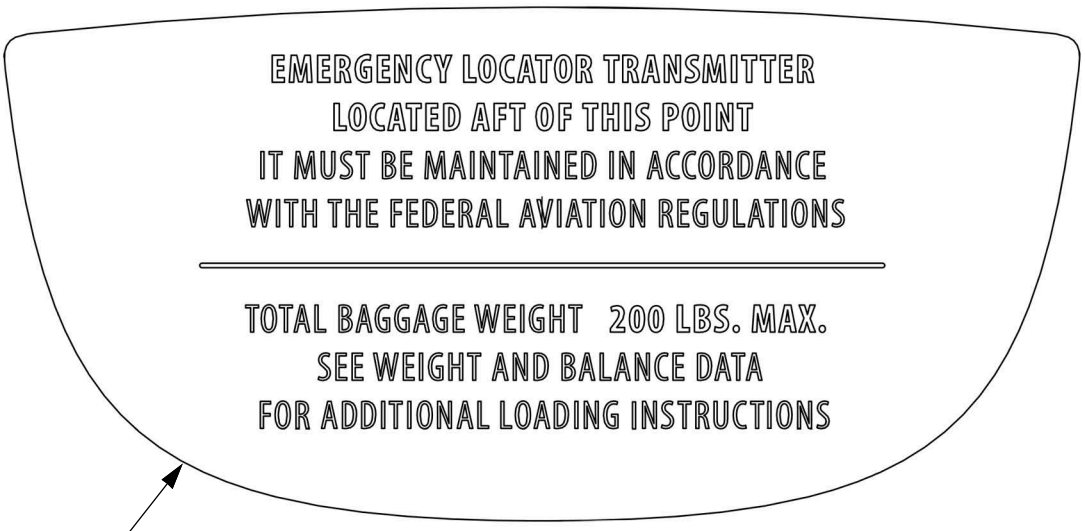

English

50

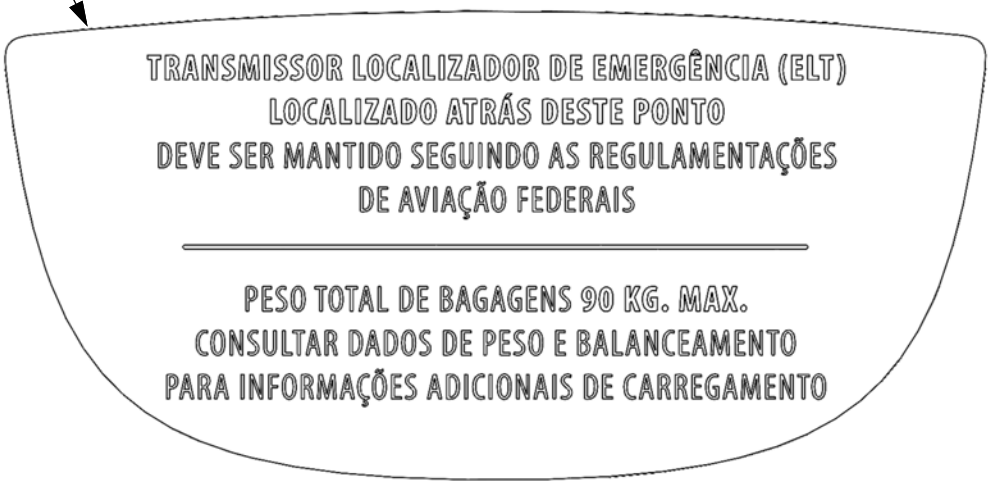

Portuguese

C

Figure 11-30.2: Interior Placards - Passenger Compartment (Continued)

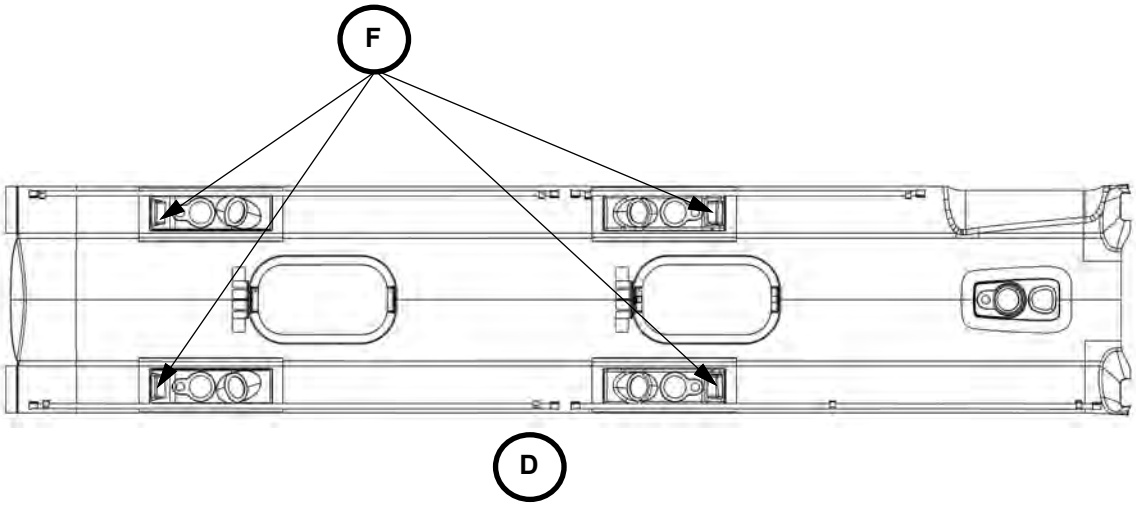

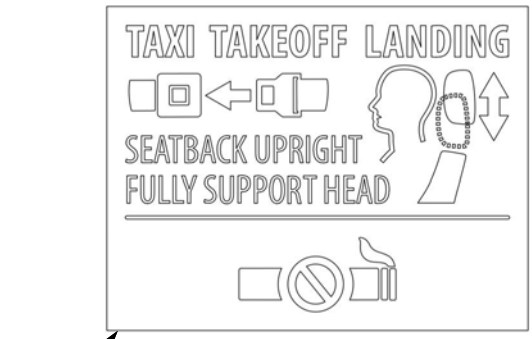

English

60



Portuguese

F

Figure 11-30.2: Interior Placards - Passenger Compartment (Continued)

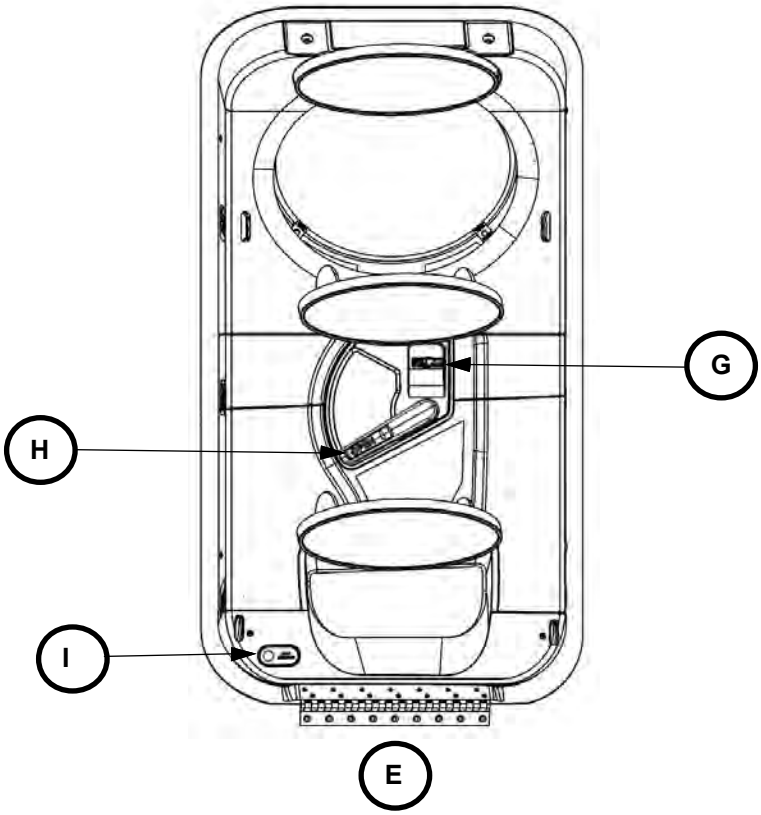

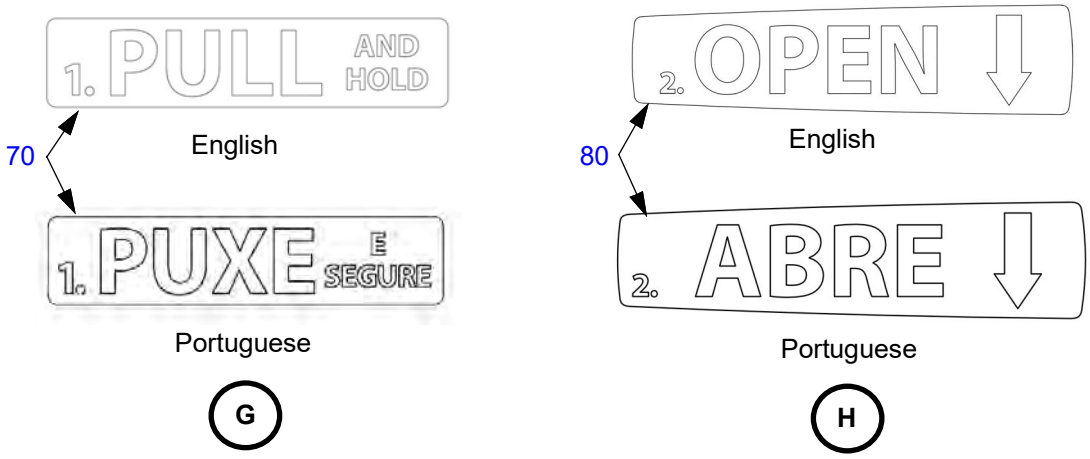

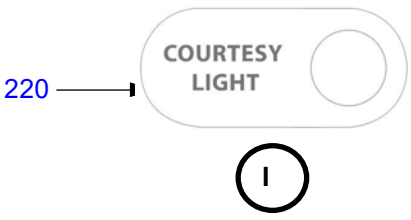

Figure 11-30.2: Interior Placards - Passenger Compartment (Continued)

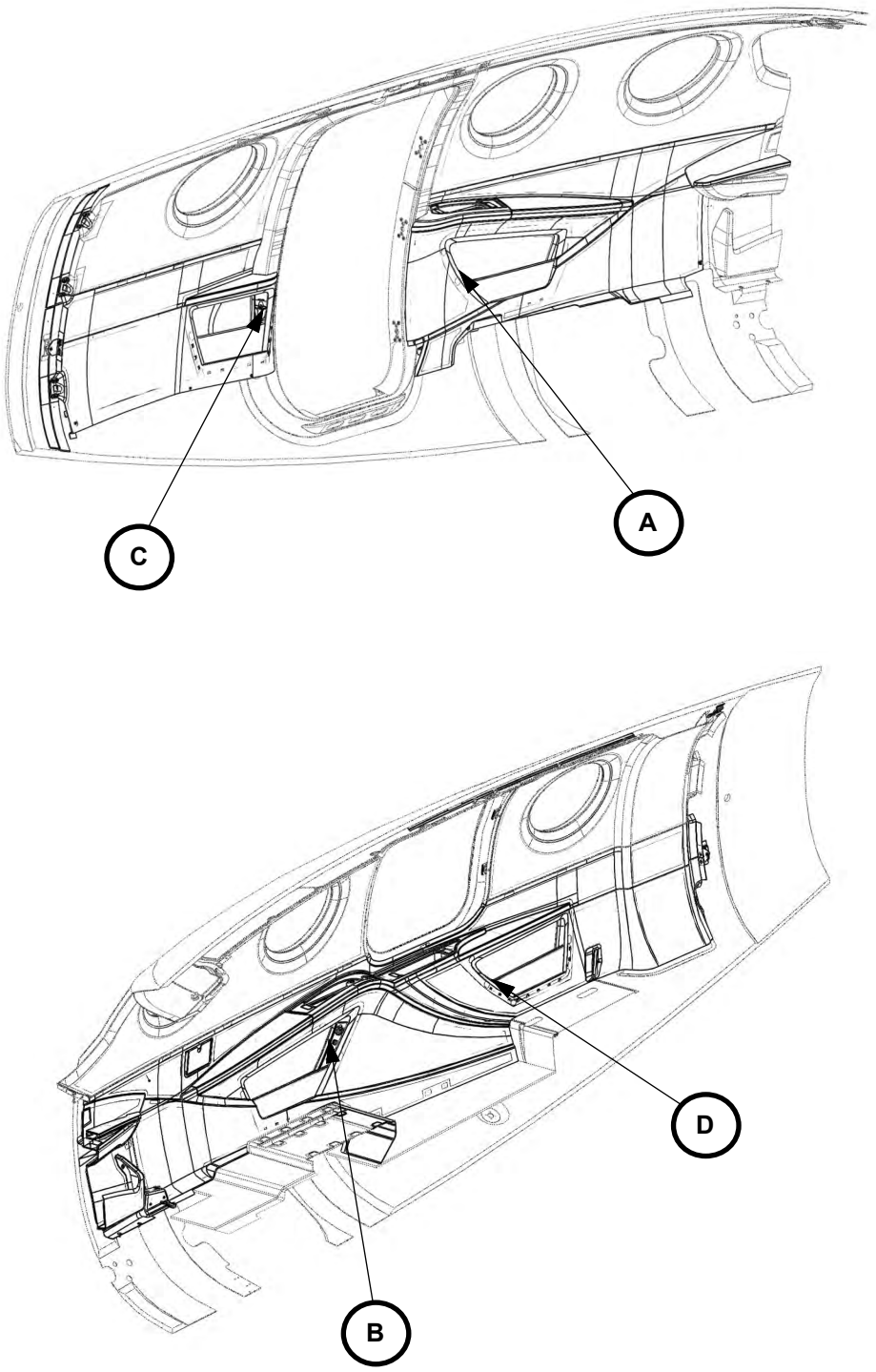

Figure 11-30.2: Interior Placards - Passenger Compartment (Continued)

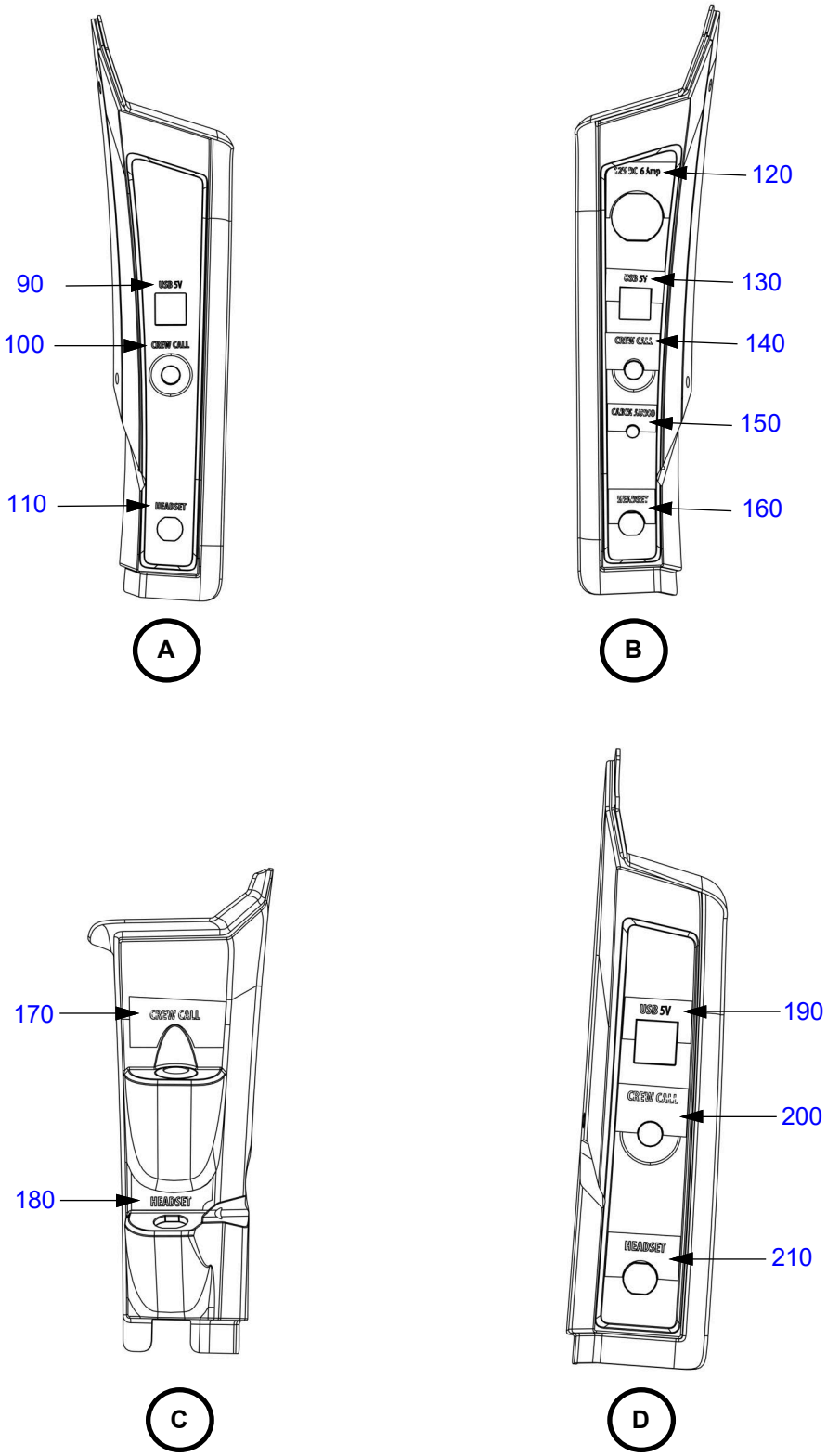

Table 11-30.2: Interior Placards - Passenger Compartment

Figure Item Number	Part Number	Part Name	Effectivity Code	Amount in Assy.
10	PK11300028	Placard, Lock Pin, Emergency Escape	K003 and On	1
	PK11310028	Placard, Lock Pin, Emergency Escape (Portuguese)	K003 and On	1
20	PK11300040	Placard, Lever, Top Latch, Emergency Escape	K003 and On	1
	PK11310040	Placard, Lever, Top Latch, Emergency Escape (Portuguese)	K003 and On	1
30	PK11300083	Placard, Oxygen Service Panel	K003 and On	1
40	PK11300082	Placard, Cover, Fill Port, Oxygen	K003 and On	1
	PK11310082	Placard, Cover, Fill Port, Oxygen (Portuguese)	K003 and On	1
50	PK11300043	Placard, ELT and Total Baggage Weight	K003 and On	1
	PK11310043	Placard, ELT and Total Baggage Weight (Portuguese)	K003 and On	1
60	PK11300046	Placard, Fasten Seat Belts	K003 and On	4
	PK11310046	Placard, Fasten Seat Belts (Portuguese)	K003 and On	4
70	PK11300241	Placard, Pull/Release, Interior Door	K003 and On	1
	PK11310241	Placard, Pull/Release, Interior Door (Portuguese)	K003 and On	1
80	PK11300041	Placard, Open, Interior, Door	K003 and On	1
	PK11310041	Placard, Open, Interior, Door (Portuguese)	K003 and On	1
90	PK11300050	Placard, LH Mid 5 Volt USB Port	K003 and On	1
100	PK11300052	Placard, LH Mid Crew Call	K003 and On	1
110	PK11300051	Placard, LH Mid 6 Pin Lemo Power Jack	K003 and On	1
120	PK11300054	Placard, RH Mid 12 Volt Power Point	K003 and On	1
130	PK11300053	Placard, RH Mid 5 Volt USB Port	K003 and On	1
140	PK11300055	Placard, RH Mid Crew Call	K003 and On	1
150	PK11300057	Placard, RH Mid Audio Input	K003 and On	1

Figure Item Number	Part Number	Part Name	Effectivity Code	Amount in Assy.
160	PK11300056	Placard, RH Mid 6 Pin Lemo Power Jack	K003 and On	1
170	PK11300059	Placard, LH Aft Crew Call	K003 and On	1
180	PK11300058	Placard, LH Aft 6 Pin Lemo Power Jack	K003 and On	1
190	PK11300060	Placard, RH Aft 5 Volt USB Port	K003 and On	1
200	PK11300061	Placard, RH Aft Crew Call	K003 and On	1
210	PK11300062	Placard, RH Aft 6 Pin Lemo Power Jack	K003 and On	1
220	PK11300031	Placard, Courtesy Light	K003 and On	1
230	PK11300040	Placard, Lever, Top Latch, Emr. Escape	K003 and On	1
	PK11310040	Placard, Lever, Top Latch, Emr. Escape (Portuguese)	K003 and On	1

CHAPTER
21

Environmental Systems

This Page Intentionally Left Blank

List of Effective Pages

Chapter/Section	Page Number	Effective Date
21-Title	Page 1	03 Apr 2020
21-Title	Page 2	03 Apr 2020
21-LOEP	Page 1	26 Mar 2024
21-LOEP	Page 2	26 Mar 2024
21-TOC	Page 1	03 Apr 2020
21-TOC	Page 2	03 Apr 2020

Distribution

21-20	Page 1	14 Jul 2021
21-20	Page 2	14 Jul 2021
21-20	Page 3	14 Jul 2021
21-20	Page 4	14 Jul 2021
21-20	Page 5	14 Jul 2021
21-20	Page 6	14 Jul 2021
21-20	Page 7	14 Jul 2021
21-20	Page 8	14 Jul 2021
21-20	Page 9	14 Jul 2021
21-20	Page 10	14 Jul 2021
21-20	Page 11	14 Jul 2021
21-20	Page 12	13 Jan 2023
21-20	Page 13	13 Jan 2023
21-20	Page 14	13 Jan 2023
21-20	Page 15	13 Jan 2023
21-20	Page 16	14 Jul 2021

Pressurization

21-30	Page 1	03 Apr 2020
21-30	Page 2	14 Jul 2021
21-30	Page 3	03 Apr 2020
21-30	Page 4	03 Apr 2020
21-30	Page 5	26 Mar 2024
21-30	Page 6	26 Mar 2024
21-30	Page 7	26 Mar 2024
21-30	Page 8	26 Mar 2024
21-30	Page 9	26 Mar 2024
21-30	Page 10	26 Mar 2024
21-30	Page 11	26 Mar 2024

21-30 ..... Page 12 ..... 26 Mar 2024
21-30 ..... Page 13 ..... 26 Mar 2024
21-30 ..... Page 14 ..... 26 Mar 2024
21-30 ..... Page 15 ..... 26 Mar 2024
21-30 ..... Page 16 ..... 26 Mar 2024
21-30 ..... Page 17 ..... 26 Mar 2024
21-30 ..... Page 18 ..... 26 Mar 2024
21-30 ..... Page 19 ..... 26 Mar 2024
21-30 ..... Page 20 ..... 26 Mar 2024

Heating

21-40 ..... Page 1 ..... 13 Jan 2023
21-40 ..... Page 2 ..... 13 Jan 2023
21-40 ..... Page 3 ..... 13 Jan 2023
21-40 ..... Page 4 ..... 13 Jan 2023
21-40 ..... Page 5 ..... 13 Jan 2023
21-40 ..... Page 6 ..... 13 Jan 2023

Cooling

21-50 ..... Page 1 ..... 03 Apr 2020
21-50 ..... Page 2 ..... 03 Apr 2020
21-50 ..... Page 3 ..... 03 Apr 2020
21-50 ..... Page 4 ..... 13 Jan 2023
21-50 ..... Page 5 ..... 03 Apr 2020
21-50 ..... Page 6 ..... 14 Jul 2021
21-50 ..... Page 7 ..... 13 Jan 2023
21-50 ..... Page 8 ..... 03 Apr 2020

Control Panel

21-60 ..... Page 1 ..... 03 Apr 2020
21-60 ..... Page 2 ..... 03 Apr 2020

CHAPTER 21

Table of Contents

List of Effective Pages ..... 21-LOEP / Page 1
Table of Contents ..... 21-TOC / Page1

Paragraph **Page Number**

Environmental Systems Distribution

Figure 21-20.1: Crew Cool Air Duct (SN: K003-K010) ..... 21-20 / Page 1
Table 21-20.1: Crew Cool Air Duct (SN: K003-K010) ..... 21-20 / Page 3
Figure 21-20.2: Crew Cool Air Duct (SN: K011 and On) ..... 21-20 / Page 4
Table 21-20.2: Crew Cool Air Duct (SN: K011 and On) ..... 21-20 / Page 5
Figure 21-20.3: Cabin Cool Air Duct ..... 21-20 / Page 6
Table 21-20.3: Cabin Cool Air Duct ..... 21-20 / Page 8
Figure 21-20.4: Cabin Heated Air Duct (K003-K006) ..... 21-20 / Page 9
Table 21-20.4: Cabin Heated Air Duct (K003-K006) ..... 21-20 / Page 11
Figure 21-20.5: Cabin Heated Air Duct (K007 and On) ..... 21-20 / Page 12
Table 21-20.5: Cabin Heated Air Duct (K007 and On) ..... 21-20 / Page 16

Environmental Systems Pressurization

Figure 21-30.1: Pressurization Control ..... 21-30 / Page 1
Table 21-30.1: Pressurization Control ..... 21-30 / Page 6
Figure 21-30.2: Intercoolers ..... 21-30 / Page 8
Table 21-30.2: Intercoolers ..... 21-30 / Page 10
Figure 21-30.3: Pressure Distribution Manifold, FWF ..... 21-30 / Page 11
Table 21-30.3: Pressure Distribution Manifold, FWF ..... 21-30 / Page 12
Figure 21-30.4: Pressure Distribution Manifold, FWA ..... 21-30 / Page 13
Table 21-30.4: Pressure Distribution Manifold, FWA ..... 21-30 / Page 14
Figure 21-30.5: Outflow Valves and Controller ..... 21-30 / Page 15
Table 21-30.5: Outflow Valves and Controller ..... 21-30 / Page 19

Environmental Systems Heating

Figure 21-40.1: Temperature Control Valve (K003-K014) ..... 21-40 / Page 1
Table 21-40.1: Temperature Control Valve (K003-K014) ..... 21-40 / Page 2
Figure 21-40.3: Temperature Controller ..... 21-40 / Page 5
Table 21-40.3: Temperature Controller ..... 21-40 / Page 6

Environmental Systems Cooling

Figure 21-50.1: Fresh Air Fan ..... 21-50 / Page 1
Table 21-50.1: Fresh Air Fan ..... 21-50 / Page 2
Figure 21-50.2: Cool Air System ..... 21-50 / Page 3
Table 21-50.2: Cool Air System ..... 21-50 / Page 6

Environmental Systems Control Panel

Figure 21-60.1: Control Panel ..... 21-60 / Page 1

DISTRIBUTION

Figure 21-20.1: Crew Cool Air Duct (SN: K003-K010)

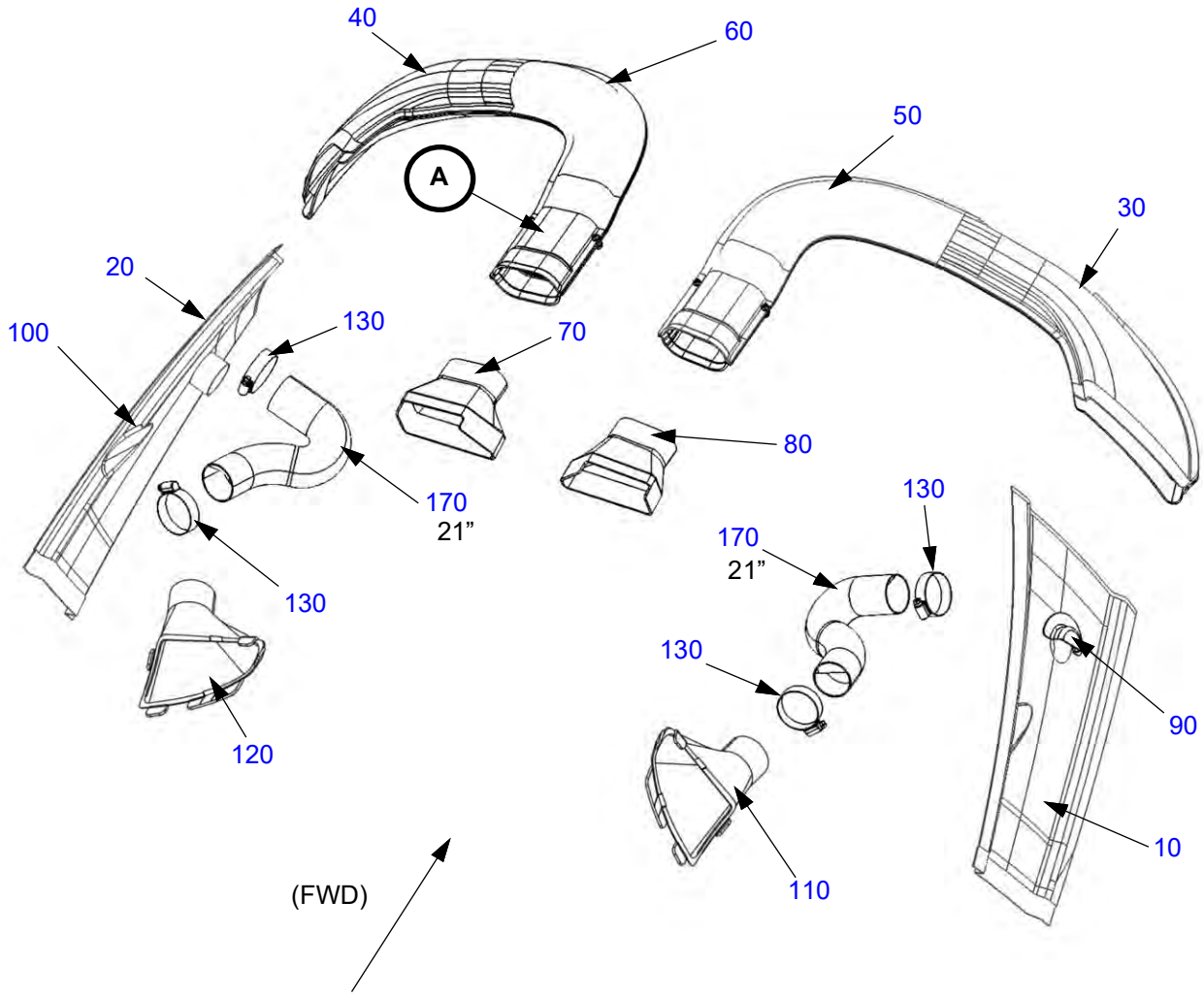

Figure 21-20.1: Crew Cool Air Duct (SN: K003-K010) (Continued) (SN: K003-K010)

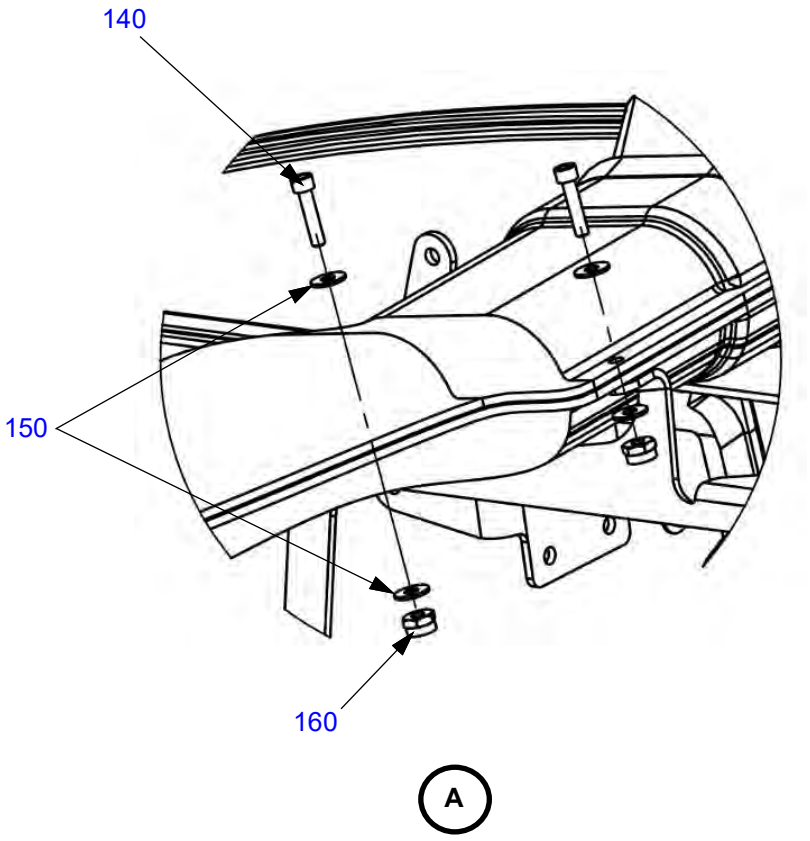

Right side shown, left side opposite.

Table 21-20.1: Crew Cool Air Duct (SN: K003-K010)

Figure Item Number	Part Number	Part Name	Effectivity Code	Amount in Assy.
10	PK21201001	Duct, Transition Feeder, Aft, AC Dist, Crew LH	K003 - K010	1
20	PK21201003	Duct, Transition Feeder, Aft, AC Dist, Crew RH	K003 - K010	1
30	PK21201003	Duct Instr. Panel Routing, Lower AC Dist Crew, LH	K003 - K010	1
40	PK21201004	Duct Instr. Panel Routing, Lower AC Dist Crew, RH	K003 - K010	1
50	PK21201005	Duct Instr. Panel Routing, Upper AC Dist, Crew, LH	K003 - K010	1
60	PK21201006	Duct Instr. Panel Routing, Upper AC Dist, Crew, RH	K003 - K010	1
70	PK21201007	Coupler, Instr. Panel Routing, AC Dist, Crew LH	K003 - K010	1
80	PK212010008	Coupler, Instr. Panel Routing, AC Dist, Crew RH	K003 - K010	1
90	PK21201009	Duct, Air Diverter Feeder, AC Dist, Crew, LH	K003 - K010	1
100	PK21201010	Duct, Air Diverter Feeder, AC Dist, Crew, RH	K003 - K010	1
110	PK21201011	Vent Housing, Outbrd, Trans, AC Dist, Crew, LH	K003 - K010	1
120	PK21201012	Vent Housing, Outbrd, Trans, AC Dist, Crew, RH	K003 - K010	1
130	MS35842-12	Clamp, Hose	K003 - K010	4
140	NAS1352-06-10P	Screw, Socket Head 0.138-32 x 0.625	K003 - K010	4
150	NAS1149FN632P	Washer, Flat #6 x 0.625	K003 - K010	8
160	MS21044N06	Nut, Self-locking, Steel 0.138-32	K003 - K010	4
170	SCAT-7	SCAT-7, 1.75” ID	K003 - K010	A/R

Figure 21-20.2: Crew Cool Air Duct (SN: K011 and On)

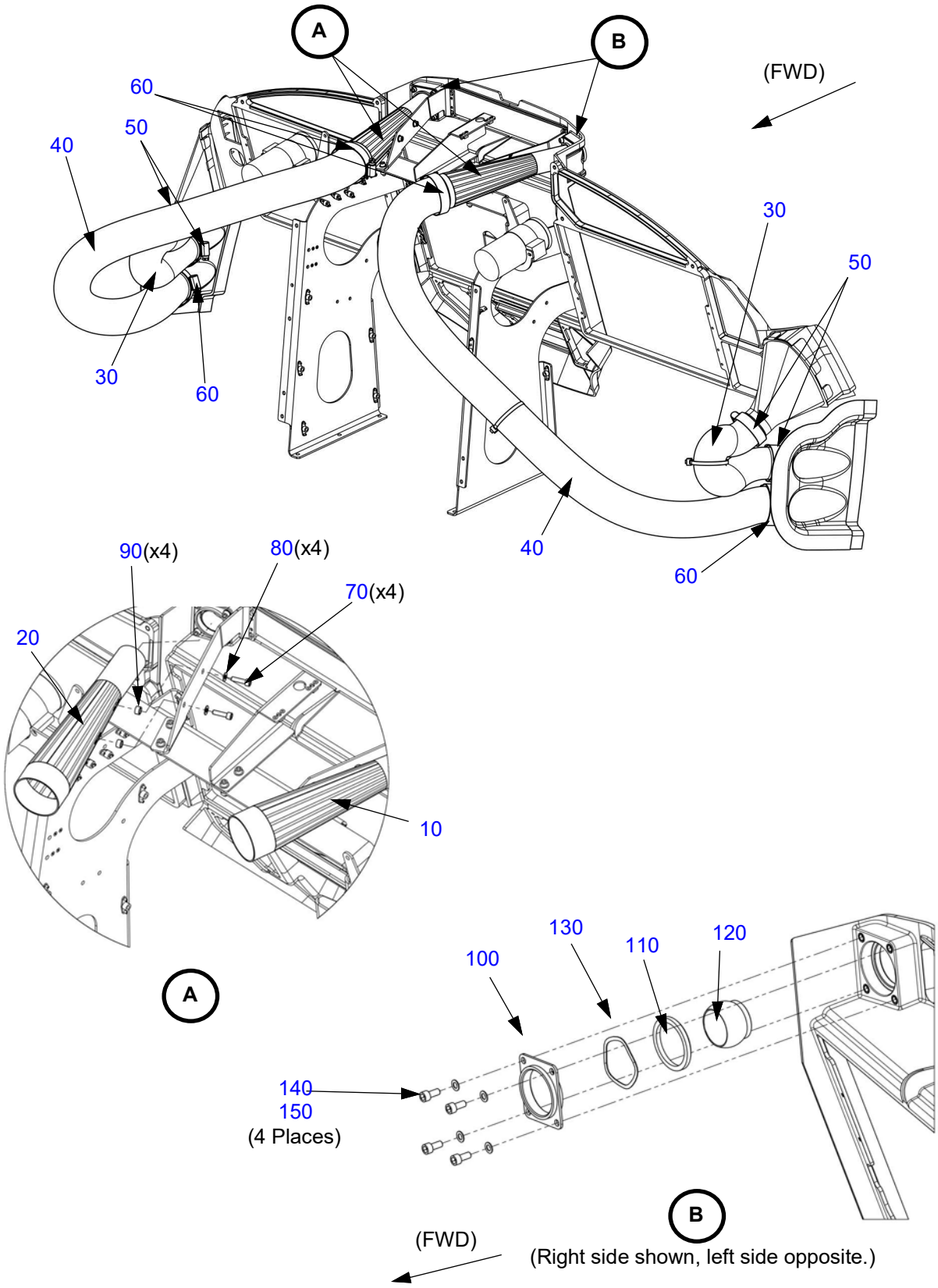

Table 21-20.2: Crew Cool Air Duct (SN: K011 and On)

Figure Item Number	Part Number	Part Name	Effectivity Code	Amount in Assy.
10	AK21041200	Venturi Tube Weldment, Eyeball Vent, Pilot	K011 and On*	1
20	AK21041300	Venturi Tube Weldment, Eyeball Vent, Copilot	K011 and On*	1
30	CAT-7	Cat-7, 1.75" I.D., Black	K011 and On*	A/R
40	CAT-8	Cat-8, 2.00" I.D., Black	K011 and On*	A/R
50	MS35842-12	Clamp, Hose	K011 and On*	4
60	MS35842-13	Clamp, Hose	K011 and On*	4
70	NAS1352-08-10P	Screw, Socket Head .164-32 x .625	K011 and On*	4
80	NAS1149FN816P	Washer, Flat #8 x .016	K011 and On*	4
90	NAS43DD3-11N	Spacer, Aluminum .214 I.D. x .312 O.D. x .172	K011 and On*	4
100	PK25121504	Containment Flange, Eyeball Vent, Center Display Bezel	K011 and On*	2
110	PK25121505	Friction Spacer, Eyeball Vent	K011 and On*	2
120	PK25121506	Eyeball Vent	K011 and On*	2
130	PK99006026	Spring, Wave	K011 and On*	2
140	NAS1352-08-6P	Screw, Socket Head .164-32 x .375	K011 and On*	8
150	NAS620C8	Washer, Reduced O.D., Cres, .169 I.D x .304 O.D.	K011 and On*	8

* (Also SN:K003-K010 with SB-0017)

Figure 21-20.3: Cabin Cool Air Duct

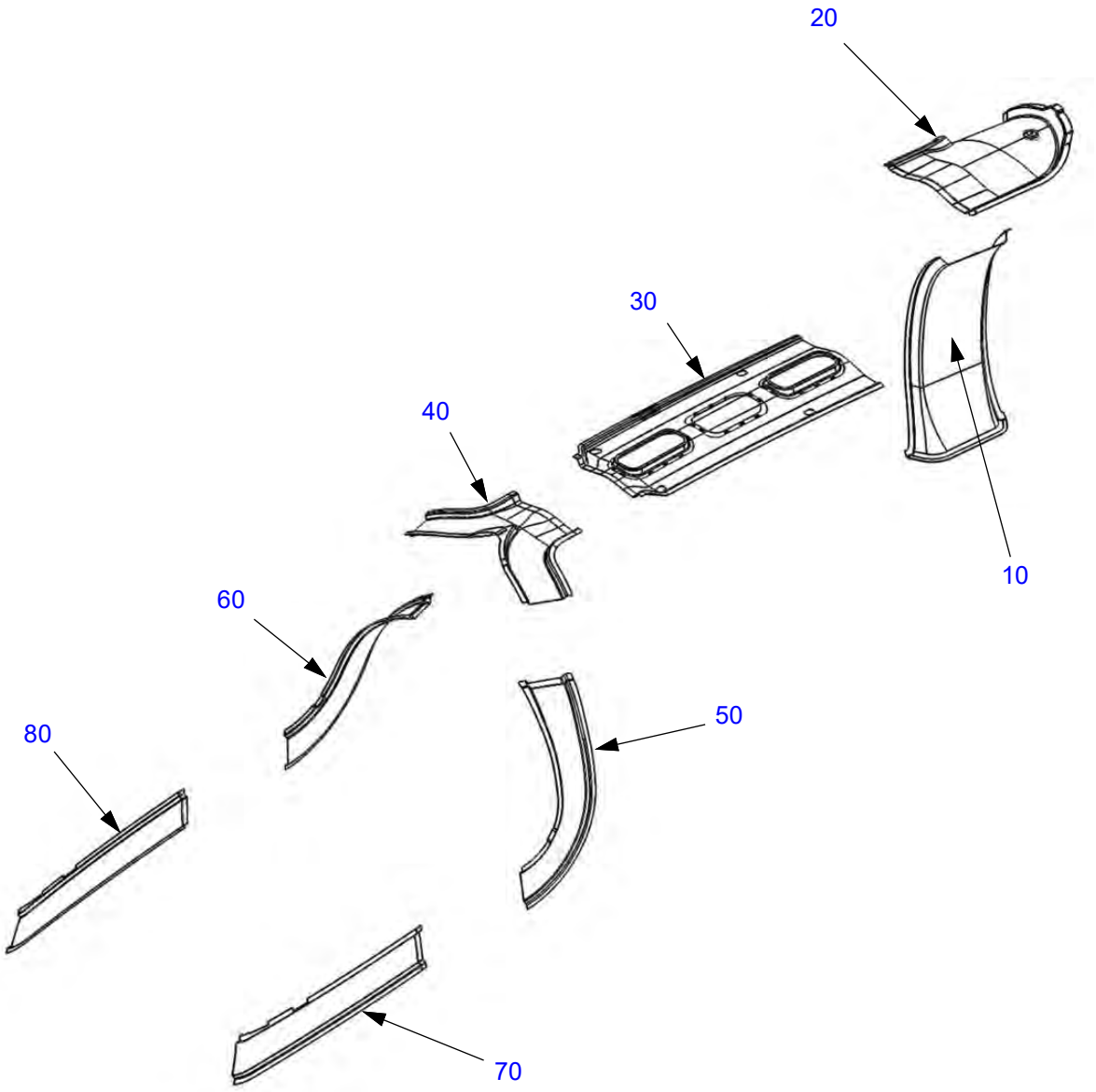

Figure 21-20.3: Cabin Cool Air Duct (Continued)

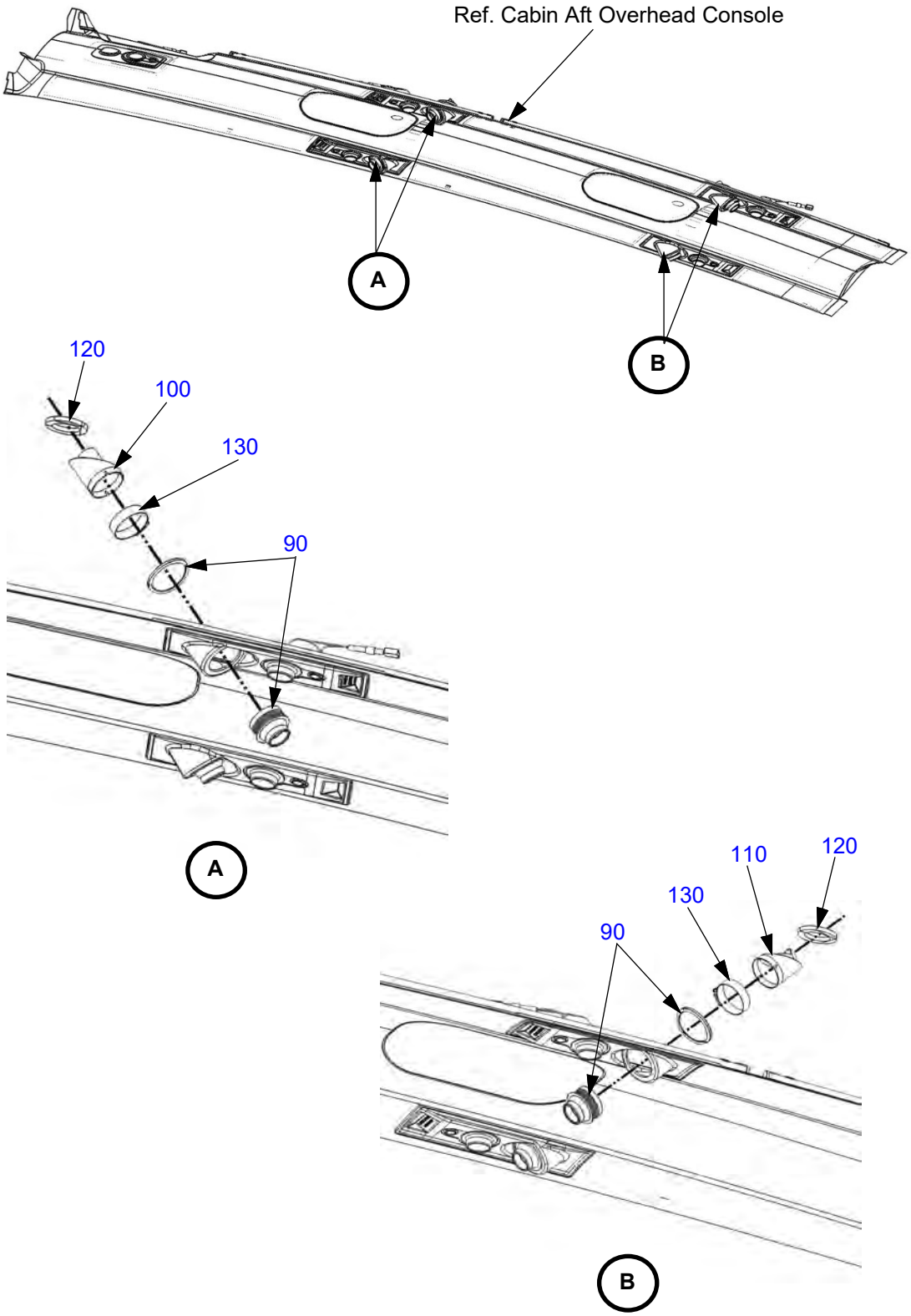

Table 21-20.3: Cabin Cool Air Duct

Figure Item Number	Part Number	Part Name	Effectivity Code	Amount in Assy.
10	PK21202002	Duct, Riser, AC Distribution, Cabin	K003 and On	1
20	PK21202004	Duct, Turn, AC Distribution, Cabin	K003 and On	1
30	PK21202006	Duct, Overhead, AC Distribution, Cabin	K003 and On	1
40	PK21202008	Duct, Overhead Split, AC Distribution, Cabin	K003 and On	1
50	PK21202009	Duct, Drop, AC Distribution, Cabin, LH	K003 and On	1
60	PK21202010	Duct, Drop, AC Distribution, Cabin, RH	K003 and On	1
70	PK21202011	Duct, FWD Reach, AC Distribution, Cabin, LH	K003 and On	1
80	PK21202012	Duct, FWD Reach, AC Distribution, Cabin, RH	K003 and On	1
90	EMG06-03	Air Gasper, Disc Type, 2", B/E Aerospace	K003 and On	4
100	PK25223411	Plenum, Air Gasper, Fwd	K003 and On	1
110	PK25223412	Plenum, Air Gasper, Aft	K003 and On	1
120	PK99005369	Closed Cell, Black Fr PVC Foam	K003 and On	2
130	MS35842-13	Clamp, Hose	K003 and On	2

Figure 21-20.4: Cabin Heated Air Duct (K003-K006)

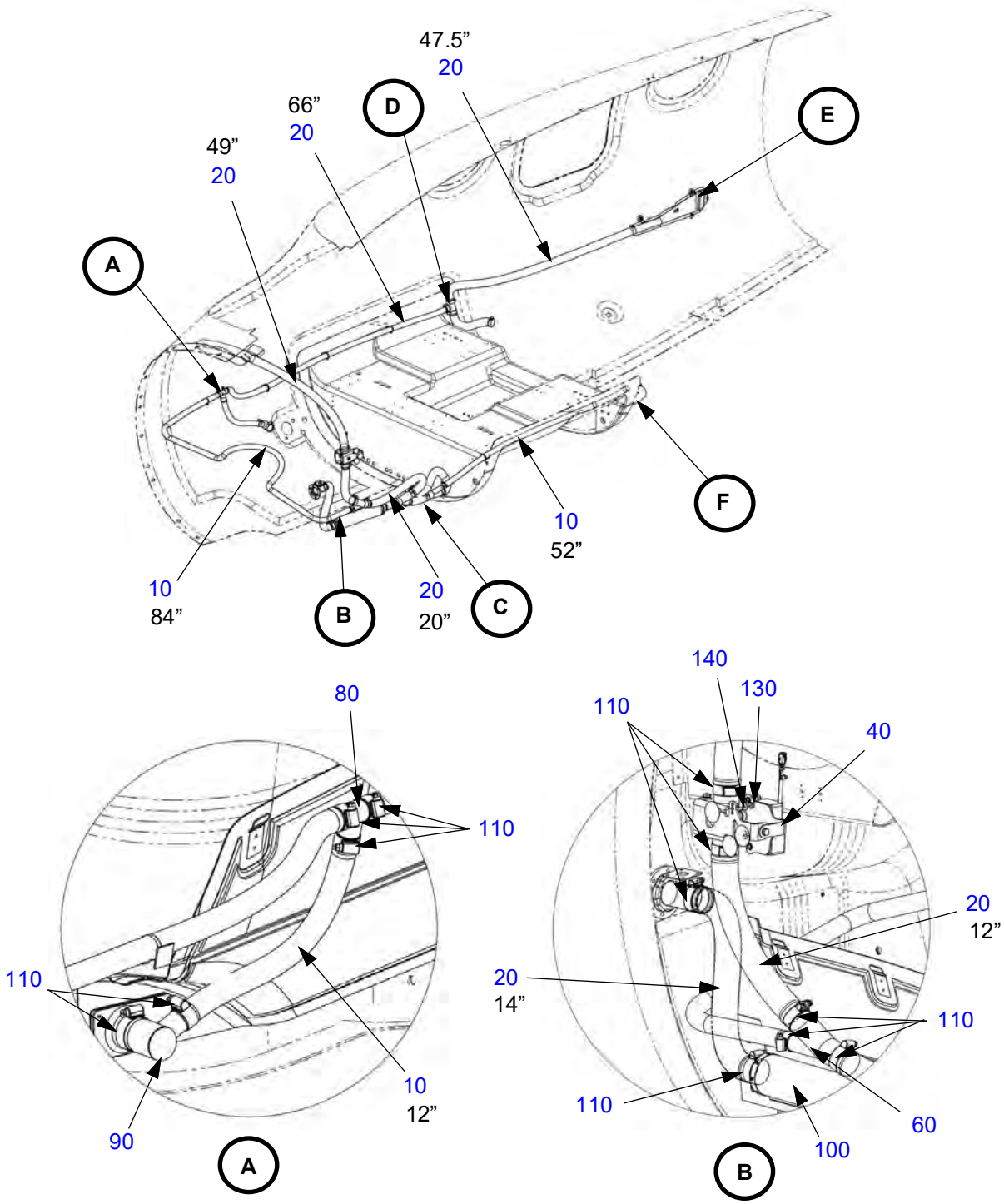

Figure 21-20.4: Cabin Heated Air Duct (K003-K006) (Continued)

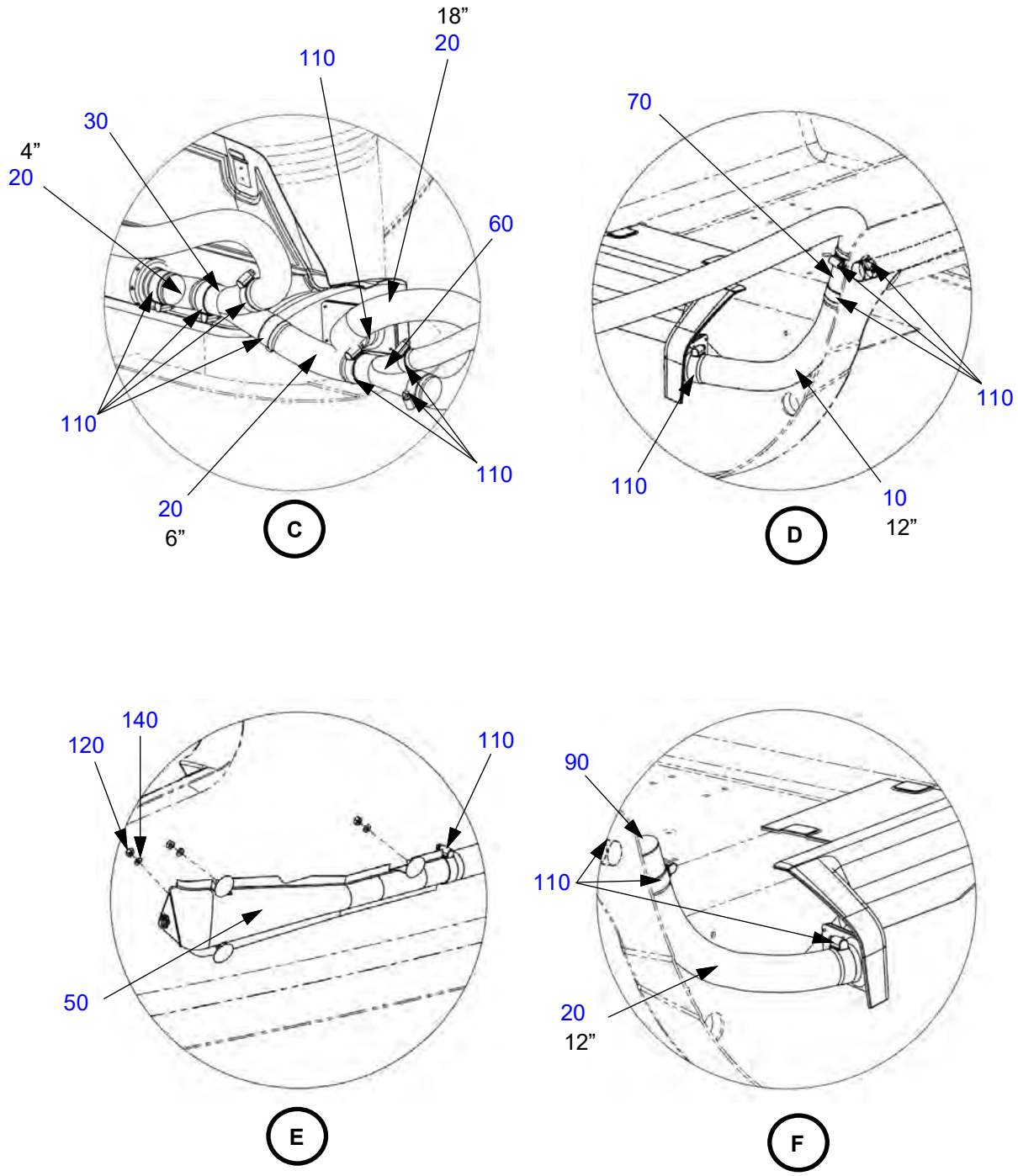

Table 21-20.4: Cabin Heated Air Duct (K003-K006)

Figure Item Number	Part Number	Part Name	Effectivity Code	Amount in Assy.
10	SCAT-4	SCAT-4, 1.0” ID	K003 - K006	A/R
20	SCAT-6	SCAT-6, 1.5” ID	K003 - K006	A/R
30	AK21402001	Y-Pipe, Heat Distribution, Weld Assy	K003 - K006	1
40	AK21402003	Butterfly Valve, Defrost, Assy	K003 - K006	1
50	AK21402008	Plenum, Aft Heat	K003 - K006	1
60	AK21402010	Y-pipe, Reducer, Heat Dist, Weld Assy	K003 - K006	2
70	AK21402013	Tee, Reducer, Heat Dist, Weld Assy	K003 - K006	1
80	AK21402015	Tee, Heat Dist, Weld Assy	K003 - K006	1
90	AK21402020	Elbow, Adapter, 1 In, Heat Dist	K003 - K006	2
100	PK99005267	Muffler, Heat Distribution	K003 - K006	1
110	MS35842-11	Clamp, Hose	K003 - K006	28
120	MS21083N3	Nut, Self-locking, Non-metallic Insert 10-32	K003 - K006	3
130	MS21044N06	Nut, Self-locking, Steel .138-32	K003 - K006	3
140	NAS1149F0332P	Washer, Flat #10 x 0.032	K003 - K006	6
*150	VRTH-07A	Zip Tie Block	K003 - K006	A/R
*160	AS33671-2	Strap, Tie Down, Adjustable	K003 - K006	A/R

* Item not illustrated.

Figure 21-20.5: Cabin Heated Air Duct (K007 and On)

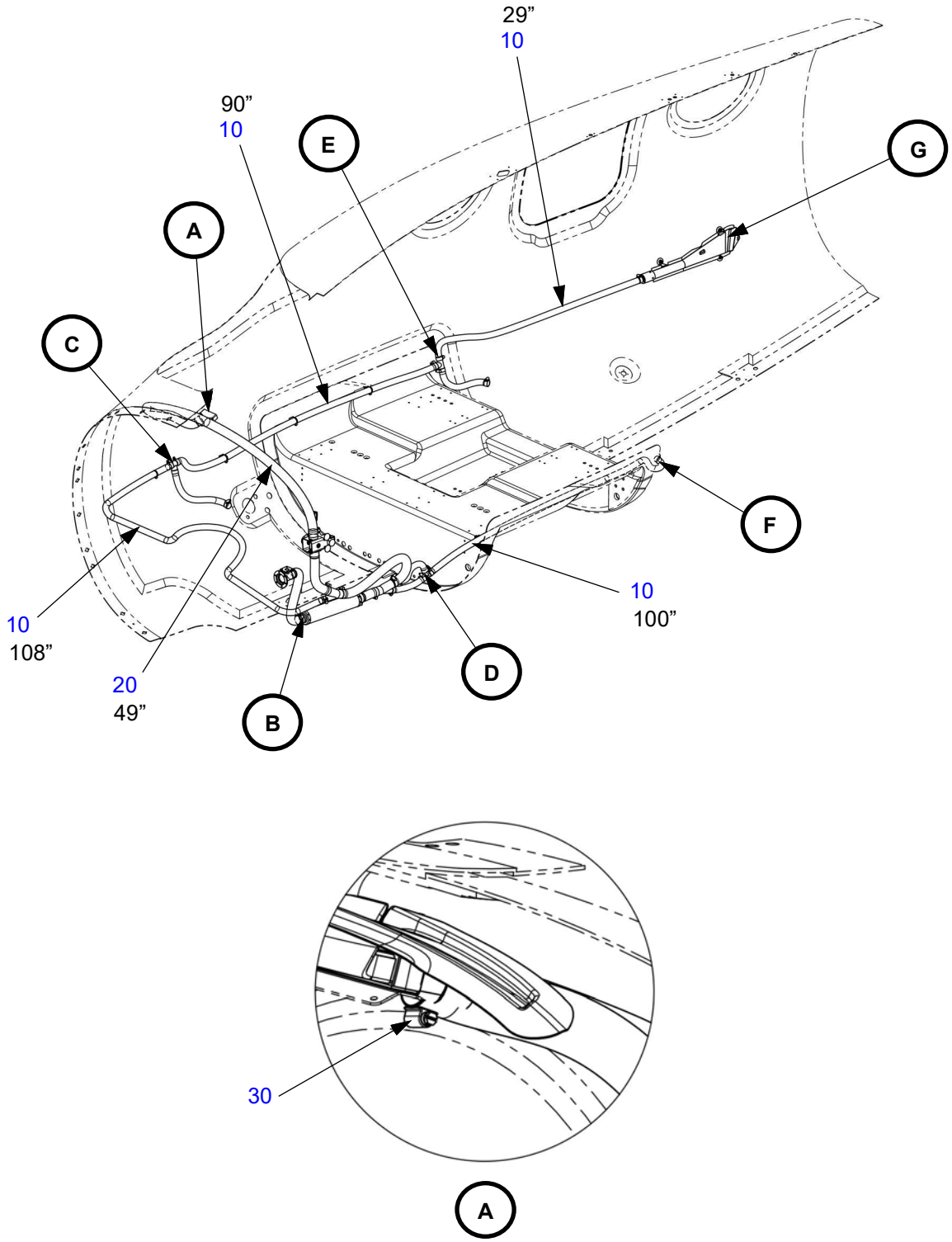

Figure 21-20.5: Cabin Heated Air Duct (K007 and On) (Continued)

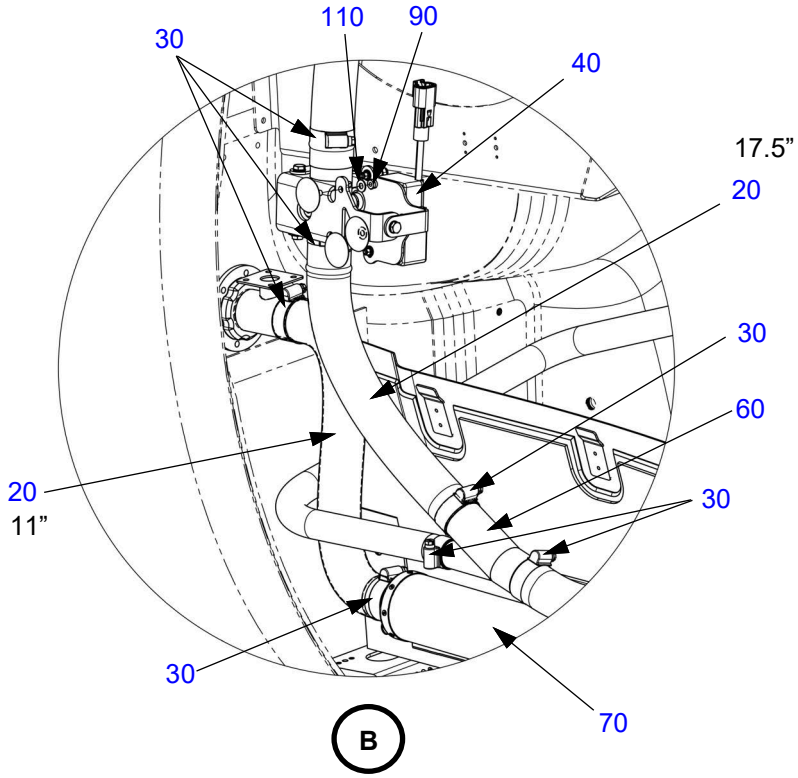

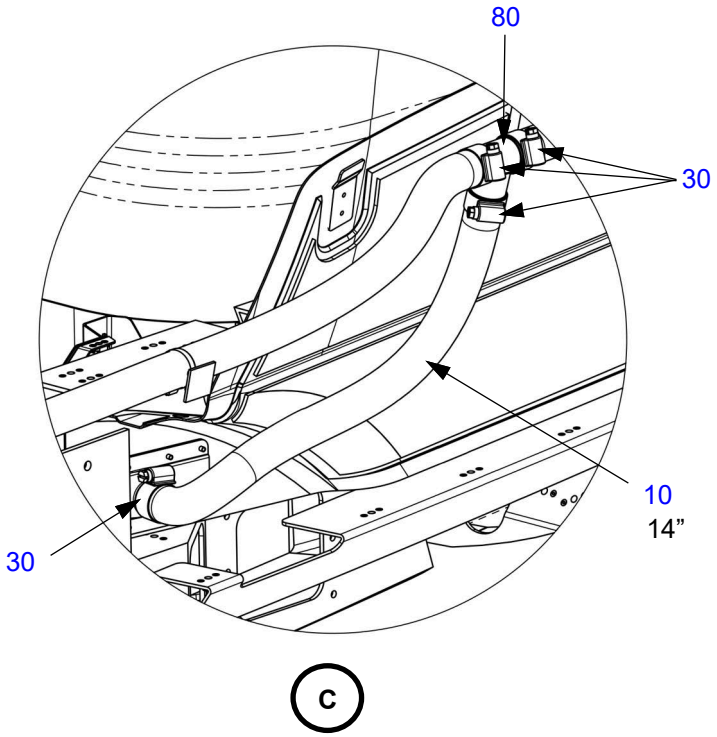

Figure 21-20.5: Cabin Heated Air Duct (K007 and On) (Continued)]

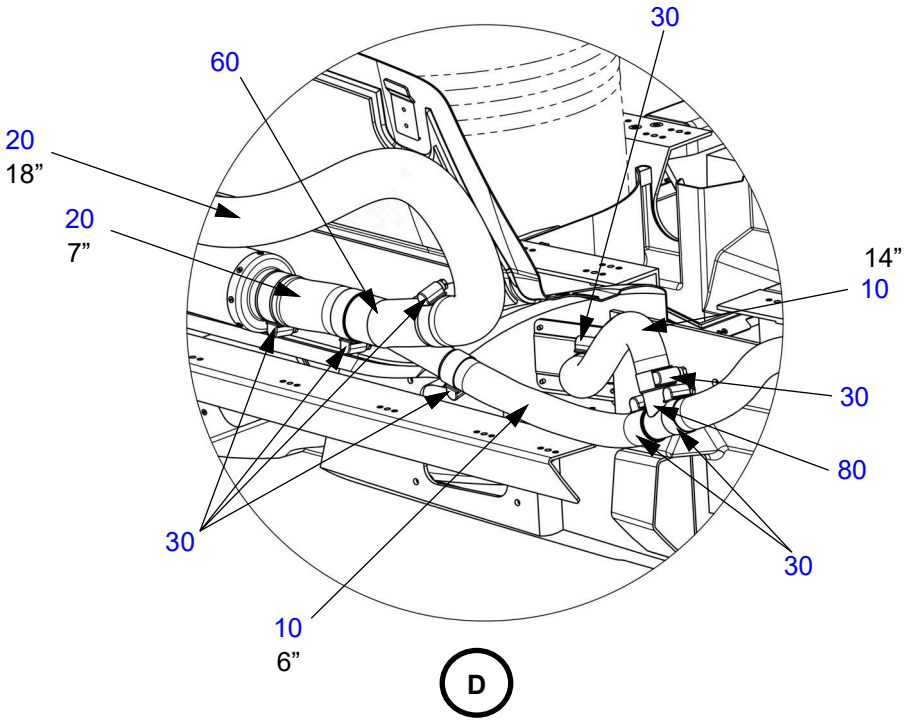

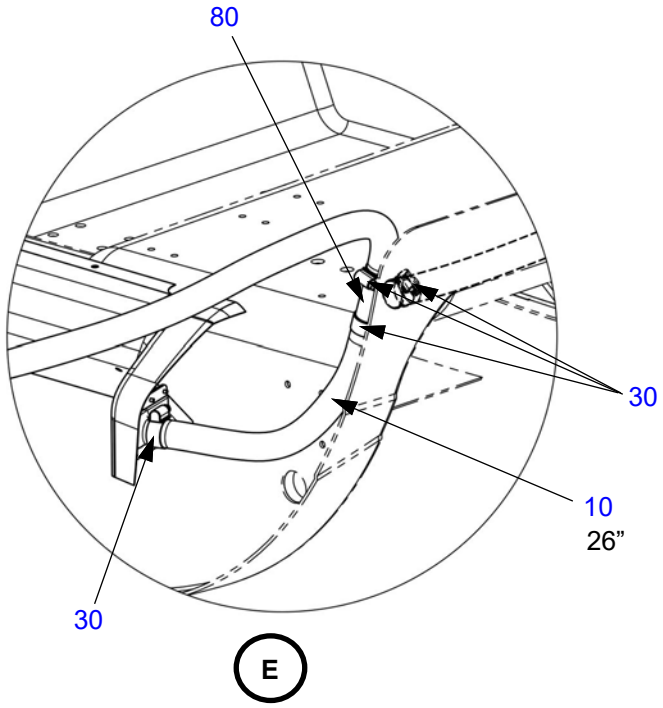

Figure 21-20.5: Cabin Heated Air Duct (K007 and On) (Continued)

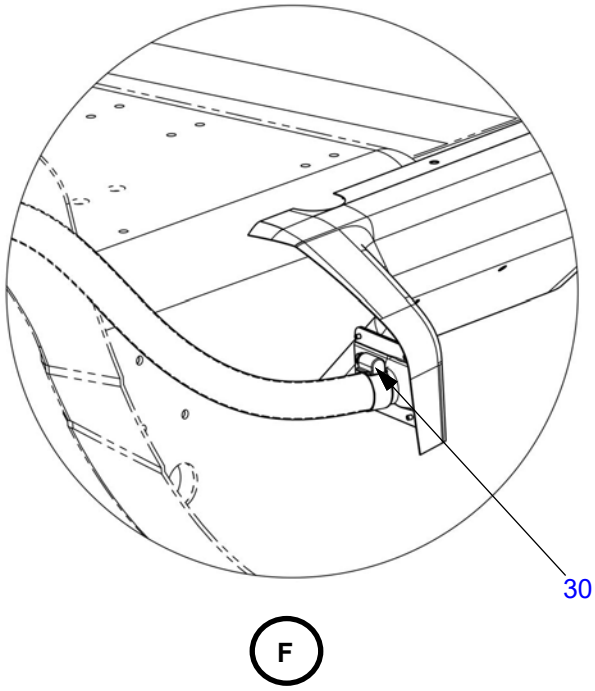

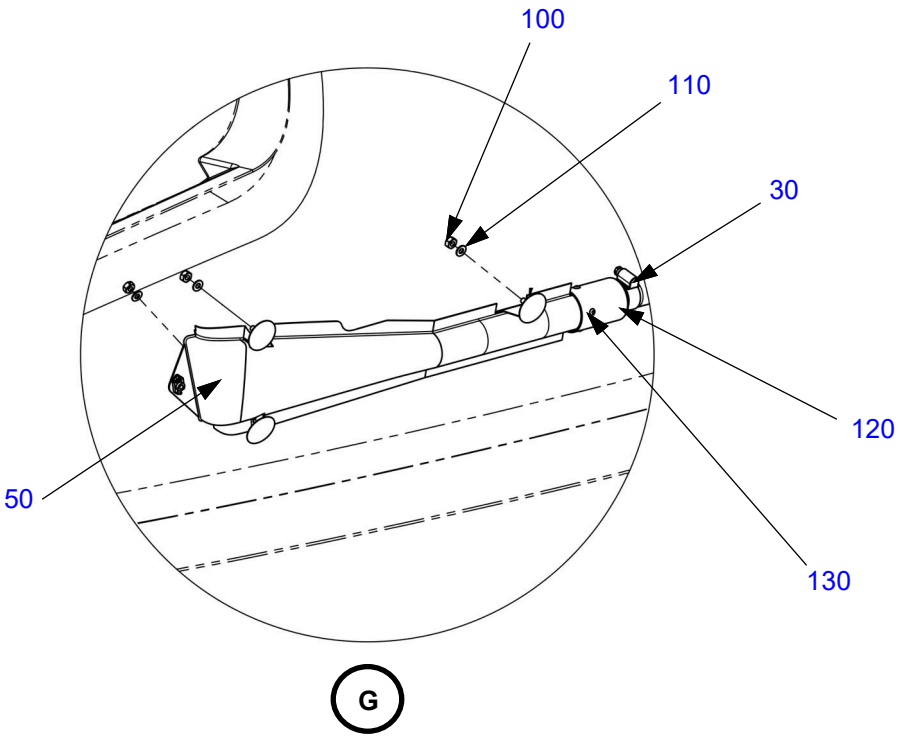

Table 21-20.5: Cabin Heated Air Duct (K007 and On)

Figure Item Number	Part Number	Part Name	Effectivity Code	Amount in Assy.
10	SCAT-4	SCAT-4, 1.0” ID	K007 - On	A/R
20	SCAT-6	SCAT-6, 1.5” ID	K007 - On	A/R
30	MS35842-12	Clamp, Hose	K007 - On	1
40	AK21402003	Butterfly Valve, Defrost, Assy	K007 - On	1
50	AK21402008	Plenum, Aft Heat	K007 - On	1
60	AK21402010	Y-pipe, Reducer, Heat Dist, Weld Assy	K007 - On	2
70	PK99005267	Muffler, Heat Distribution	K007 - On	1
80	AK21402015	Tee, Heat Dist, Weld Assy	K007 - On	3
90	MS21044N06	Nut, Self-locking, Steel .138-32	K007 - On	3
100	MS21083N3	Nut, Self-locking, Non-metallic Insert 10-32	K007 - On	3
110	NAS1149F0332P	Washer, Flat #10 x 0.032	K007 - On	6
120	AK21402023	Adapter, Flapper, Weldment	K007 - On	1
130	CR3213-4-02	Cherry Uni-head Rivet, Aluminum Ø 1/8 x .224	K007 - On	4
*140	VRTH-07A	Zip Tie Block	K007 - On	A/R
*150	AS33671-2	Strap, Tie Down, Adjustable	K007 - On	A/R

* Item not illustrated.

PRESSURIZATION

Figure 21-30.1: Pressurization Control

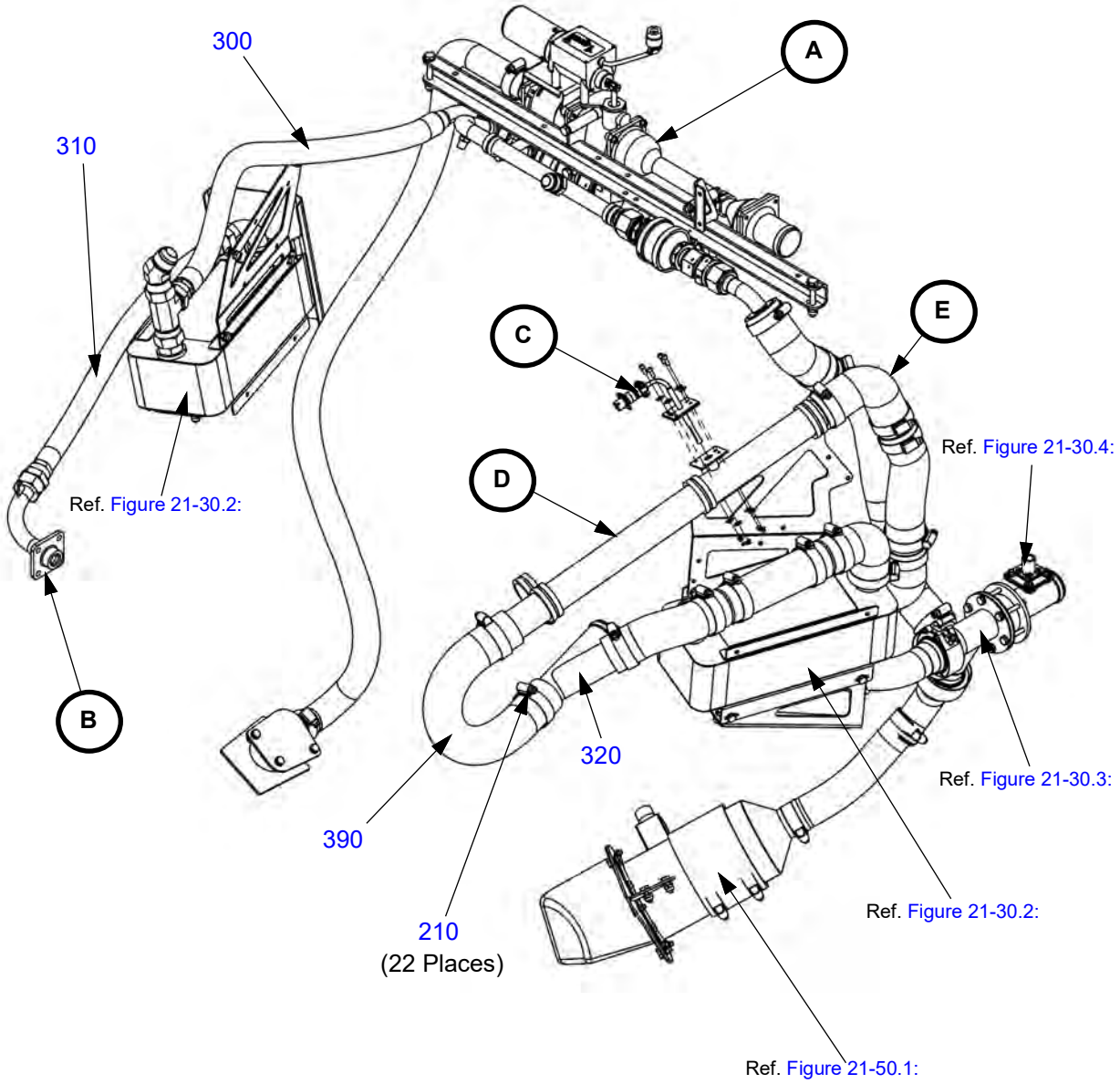

Figure 21-30.1: Pressurization Control (Continued)

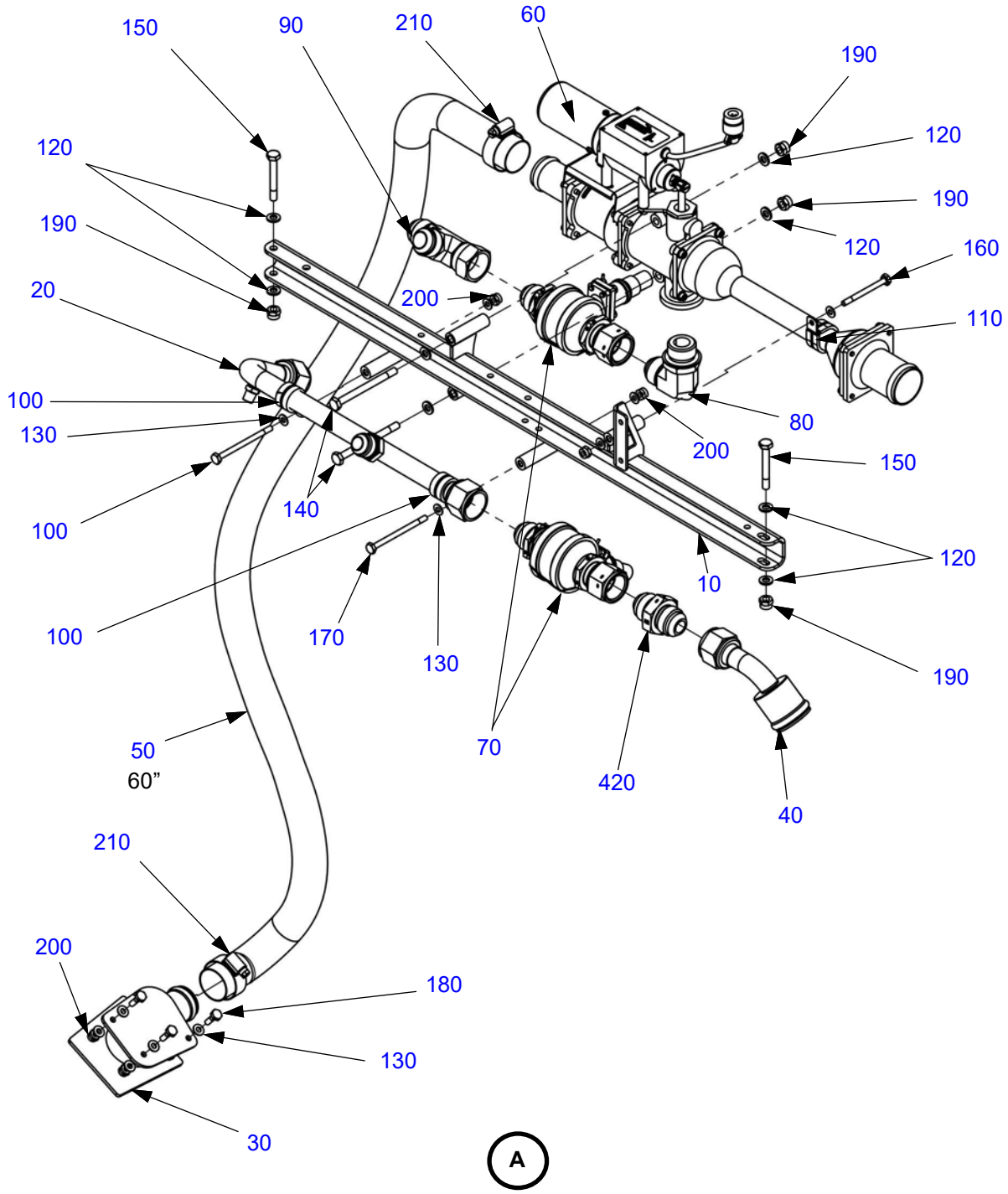

Figure 21-30.1: Pressurization Control (Continued)

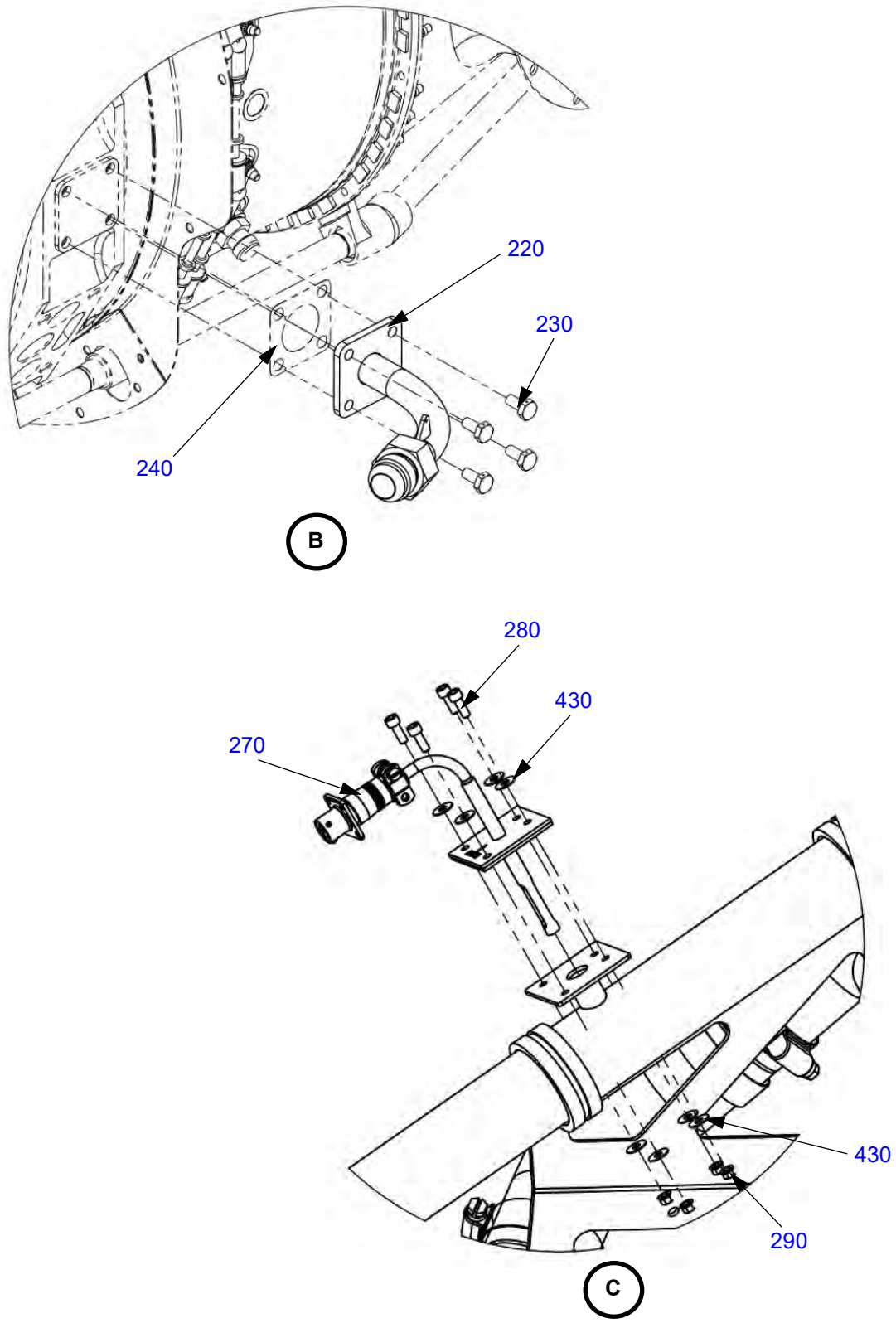

Figure 21-30.1: Pressurization Control (Continued)

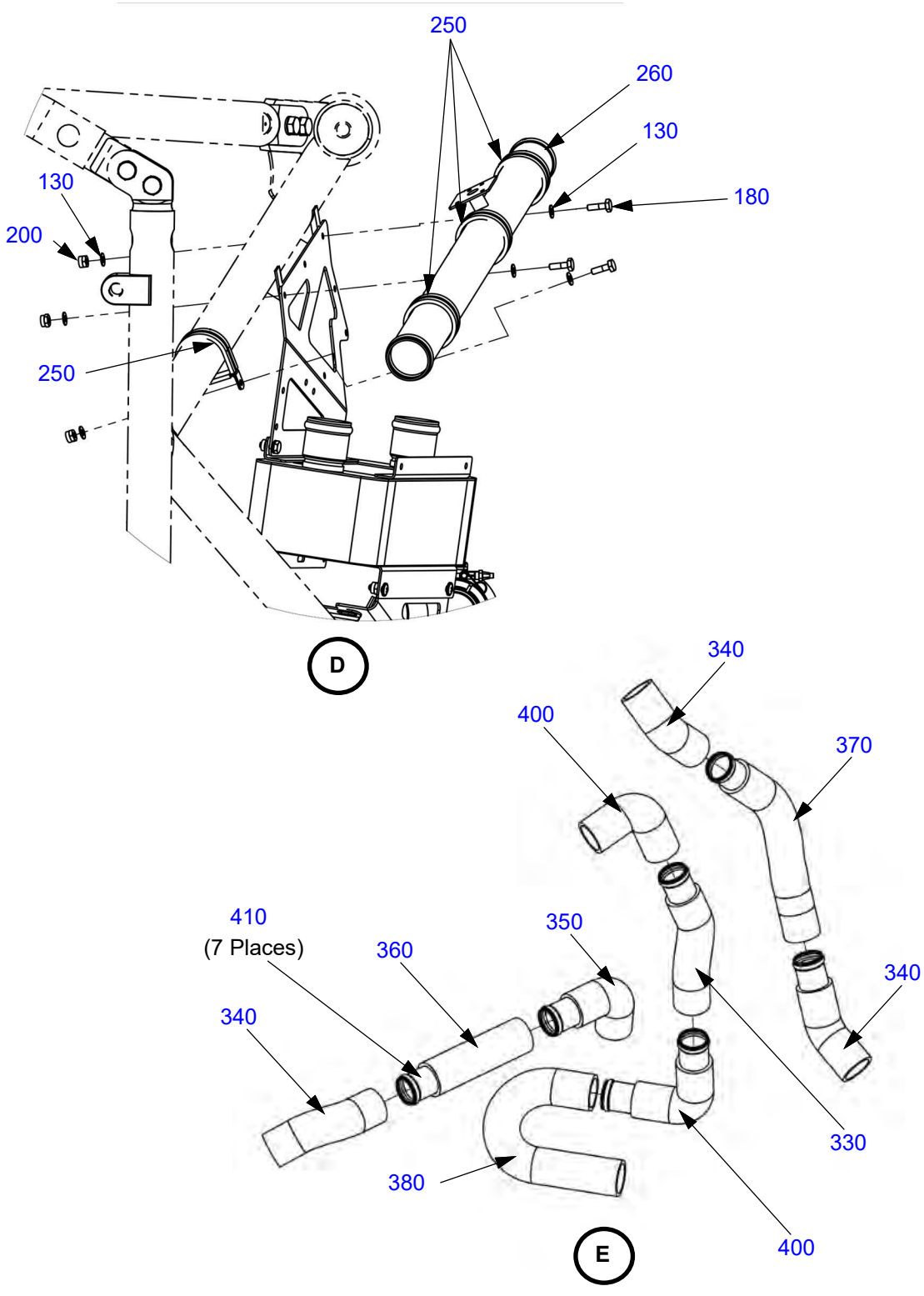

Figure 21-30.1: Pressurization Control (Continued)

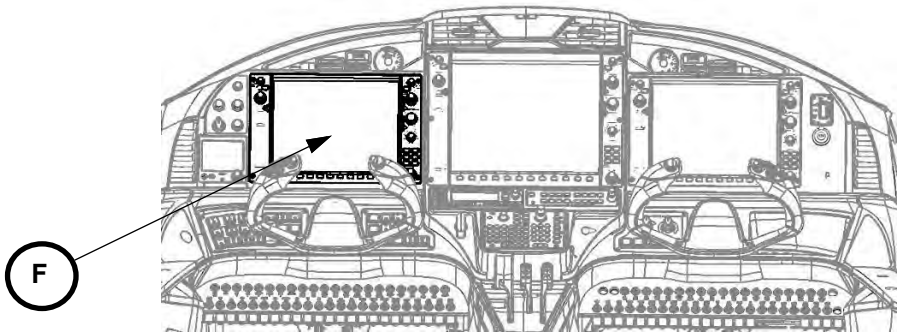

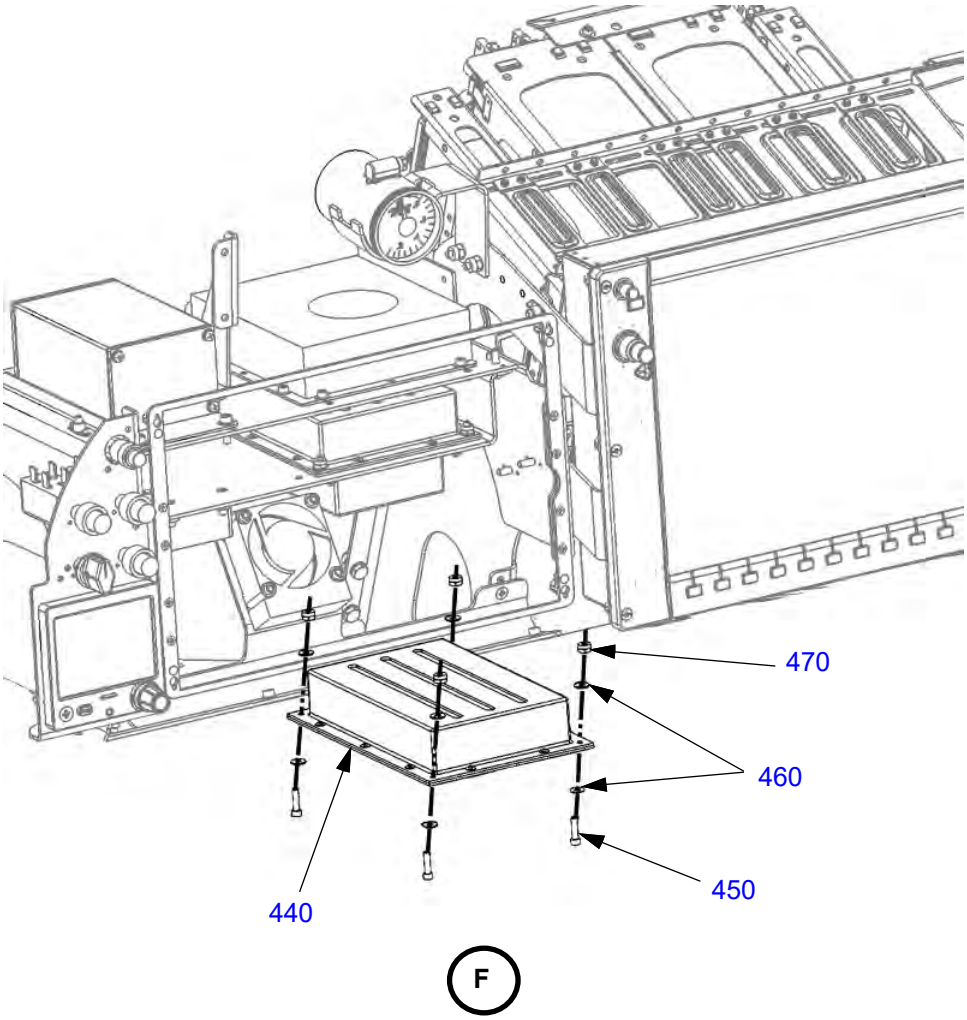

Table 21-30.1: Pressurization Control

Figure Item Number	Part Number	Part Name	Effectivity Code	Amount in Assy.
10	AK71400400	Bracket, ECS, Weld Assy	K003 and On	1
20	AK21207200	Manifold, ECS, Weld Assy	K003 and On	1
30	AK21207300	Plenum, Ambient Intake, Weld Assy	K003 and On	1
40	AK21208000	Emer Press Circ, Fitting Weld Assy	K003 and On	1
50	SKEET-5	SKEET-5, 1.25” ID	K003 and On	A/R
60	PK99007038	Control Valve Jet Pump	K003 and On	1
70	PK99007039	Solenoid Shutoff Valve	K003 and On	2
80	12 C50X-SS	Parker: Male, Straight to JIC 37 Deg. Flare	K003 and On	1
90	12 R6X-SS	Parker: Fitting, Tee, Male 37 Deg. Flare, 37 Deg. Flare Swivel	K003 and On	1
100	AS21919WDG12	Clamp, Loop Type, Cushioned, 0.750 Diam.	K003 and On	2
110	AS21919WDG14	Clamp, Loop Type, Cushioned, 0.865 Diam.	K003 and On	1
120	NAS1149F0463P	Washer, Flat 1/4 x 0.063	K003 and On	8
130	NAS1149F0332P	Washer, Flat #10 x 0.032	K003 and On	22
140	AN4-30A	Bolt, 1/4-28 x 2-9/32” Undrilled	K003 and On	2
150	AN4-17A	Bolt, 1/4-28 x 1-25/32” Undrilled	K003 and On	2
160	AN3-21A	Bolt, 10-32 x 2-5/32” Undrilled	K003 and On	1
170	AN3-26A	Bolt, 10-32 x 2-25/32” Undrilled	K003 and On	2
180	AN3-5A	Bolt, 10-32 x 21/32” Undrilled	K003 and On	6
190	MS21045L4	Nut, Self-Locking, Steel 1/4-28	K003 and On	4
200	MS21045L3	Nut, Self-Locking, Steel 10-32	K003 and On	9
210	MS35842-12	Clamp, Hose	K003 and On	2
220	AK36102000	Fitting, Bleed Air, P3	K003 and On	1
230	MS59575-07	Bolt	K003 and On	4
240	3025538	Gasket	K003 and On	1

Figure Item Number	Part Number	Part Name	Effectivity Code	Amount in Assy.
250	AS21919WCJ25	Clamp, Loop Type, Cushioned, CRES, Ø 1.563	K003 and On	4
260	AK21401100	MAF Mount Weldment	K003 and On	1
270	PK99007042	Mass Flow Sensor, ECS	K003 and On	1
280	NAS1352-06-7P	Screw, Socket Head .138-32 x .438	K003 and On	4
290	MS21042L06	Nut, Self-locking, 450°, Reduced #6-32	K003 and On	4
300	AE3660151K0180/ 124F002-12CL-0180	Eaton/parker: Hose, Intercooler To Flow Control Valve	K003 and On	1
310	PK99610027	Hose, P3 To Intercooler	K003 and On	1
320	AK21204000	Tee, Temp Control Valve, Weld Assy	K003 and On	1
330	PK99610011	Hose, Silicone, Straight, 1.5 ID	K003 and On	1
340	PK99610012	Hose, Silicone, 45º Elbow, 1.5 ID	K003 and On	3
350	PK99610013	Hose, Silicone, 90º Elbow, 1.5 ID	K003 and On	1
360	PK99610016	Hose, Silicone, Straight, 1.5 ID	K003 and On	1
370	PK99610020	Hose, Silicone, Straight, 1.5 ID	K003 and On	1
380	PK99610024	Hose, Silicone, 180º Elbow, 1.5 ID	K003 and On	1
390	PK99610025	Hose, Silicone, 180º Elbow, 1.5 ID	K003 and On	1
400	PK99610026	Hose, Silicone, 180º Elbow, 1.5 ID	K003 and On	2
410	PK21200001	Tube, Joiner, 1.5 ID	K003 and On	7
420	PK21207002	Sonic Nozzle, Emerg Press Circuit, ECS	K003 and On	1
430	NAS1149FN616P	Washer, Flat #6 x .016	K003 and On	8
440	PK99007060	Mass Flow Controller, ECS	K003 and On	1
450	NAS1352-06-9P	Screw, Socket Head .138-32 x .563	K003 and On	4
460	NAS1149FN632P	Washer, Flat #6 x .032	K003 and On	8
470	MS21044N06	Nut, Self-locking, Steel .138-32	K003 and On	4

Figure 21-30.2: Intercoolers

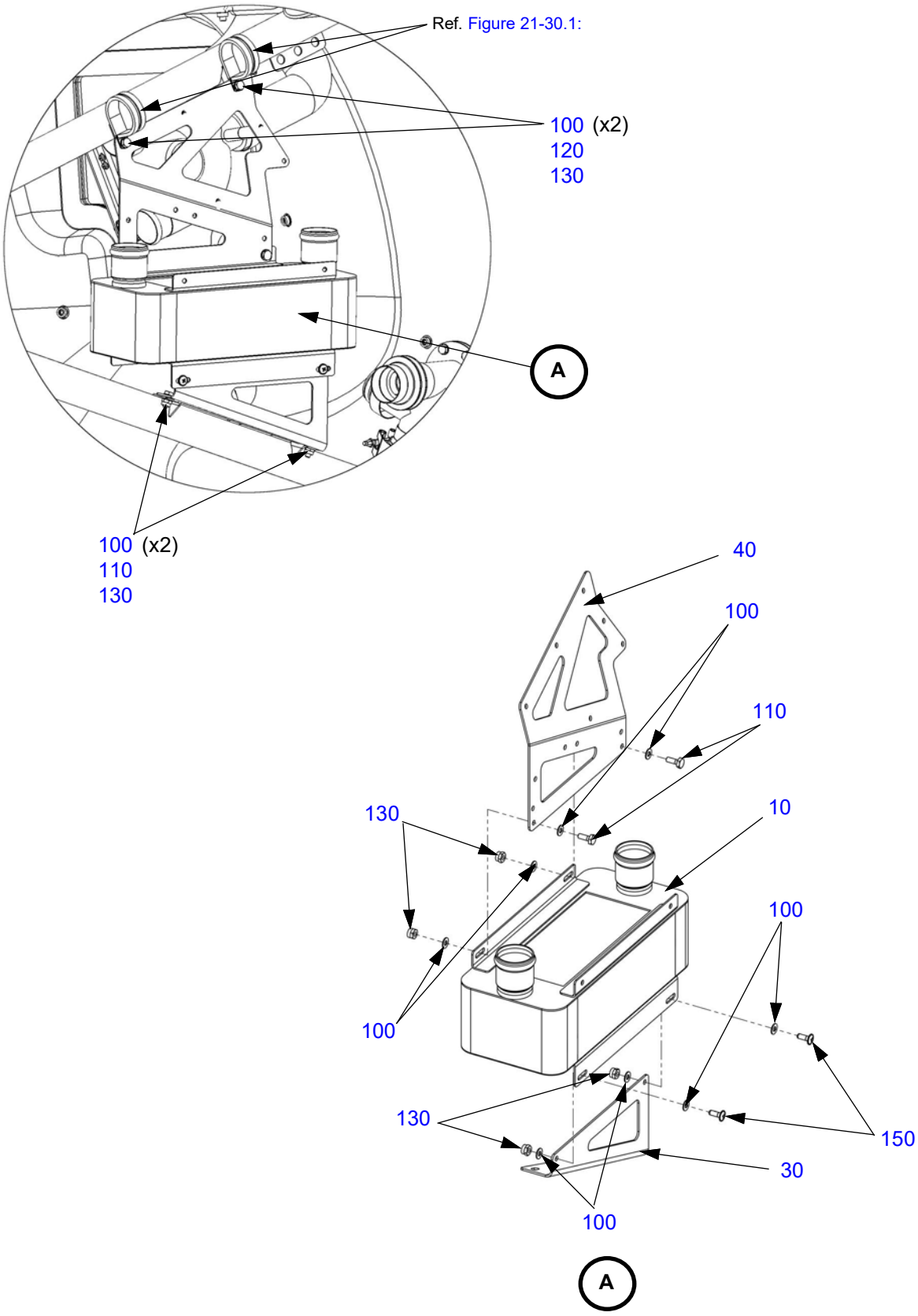

Figure 21-30.2: Intercoolers (Continued)

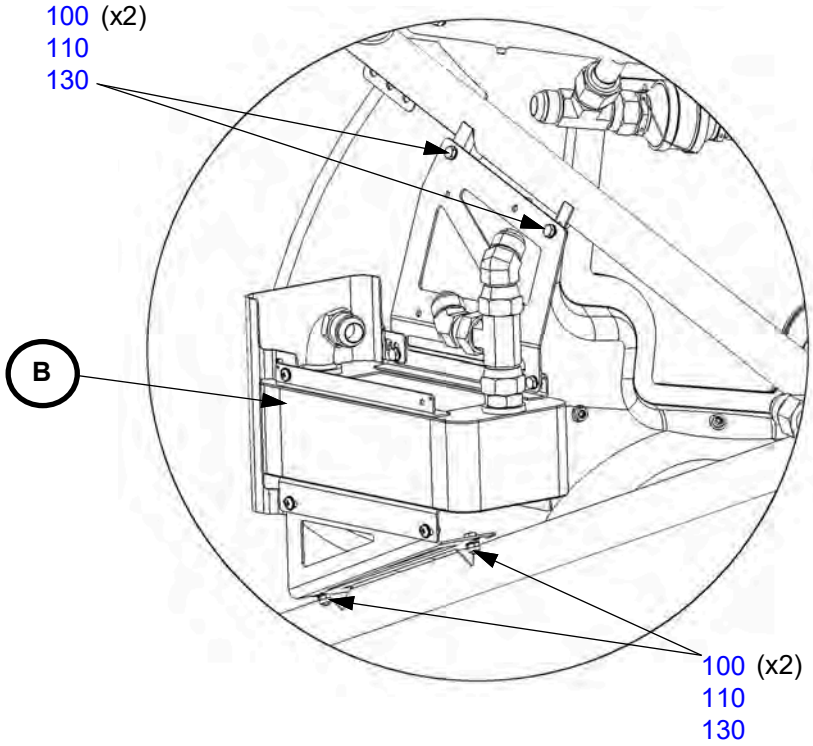

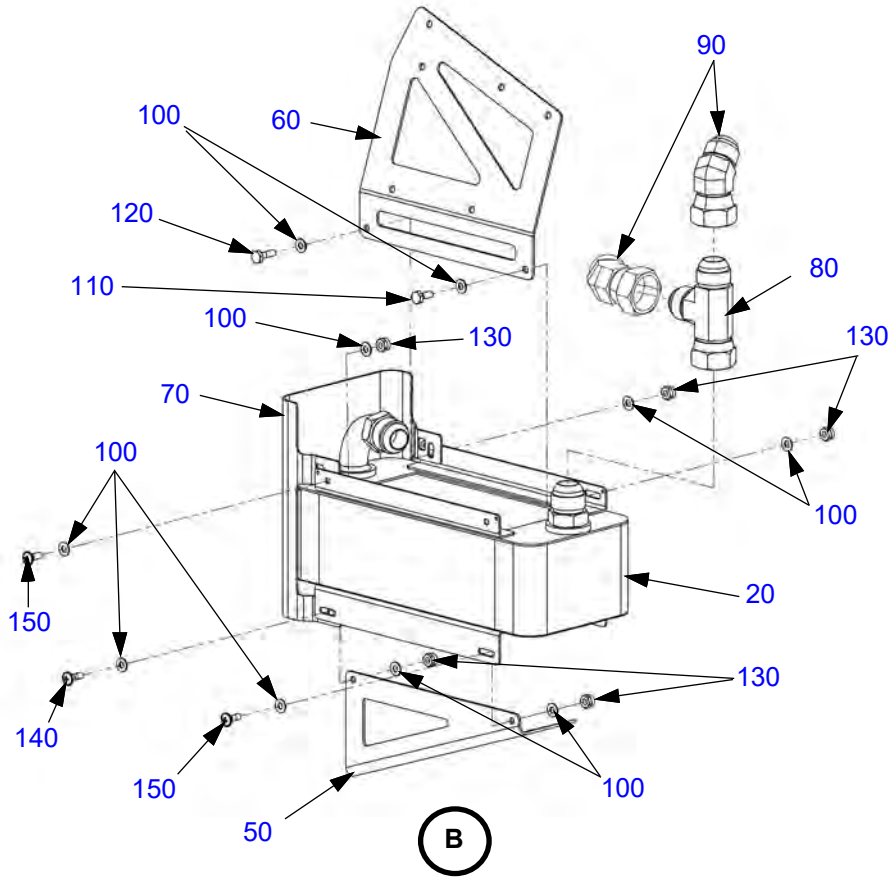

Table 21-30.2: Intercoolers

Figure Item Number	Part Number	Part Name	Effectivity Code	Amount in Assy.
10	PK99007037	Heat Exchanger, Eng, Bleed, High Temp	K003 and On	1
20	PK99007036	Heat Exchanger, Eng, Bleed, High Temp	K003 and On	1
30	PK21400004	Bracket, Lower Lft, 2nd Stage Intercooler Mnt	K003 and On	1
40	PK71404001	Bracket, Upper Lft, 2nd Stage Intercooler Mnt	K003 and On	1
50	PK21400001	Bracket, Lower Rt, 1st Stage Intercooler Mnt	K003 and On	1
60	PK71400002	Bracket, Upper Rt, 1st Stage Intercooler Mnt	K003 and On	1
70	PK21206001	Blast Shield, Intercooler, Right	K003 and On	1
80	12_R6X-SS	Fitting, Tee, Male 37° Flare, 37° Flare Swivel	K003 and On	1
90	12_V6X-SS	Fitting, Elbow, 45, JIC, 3/4, Stainless Steel	K003 and On	2
100	NAS1149F0332P	Washer, Flat #10 x 0.032	K003 and On	18
110	AN3-4A	Bolt, 10-32 x 17/32” Undrilled	K003 and On	3
120	AN3-5A	Bolt, 10-32 x 15/32” Undrilled	K003 and On	1
130	MS21045L3	Nut, Self-Locking, Steel, 10-32	K003 and On	9
140	AN525-10-R10	Screw, Washer Head 0.190-32 x 0.625	K003 and On	1
150	AN525-10-R9	Screw, Washer Head 0.190-32 x 0.563	K003 and On	4

Figure 21-30.3: Pressure Distribution Manifold, FWF

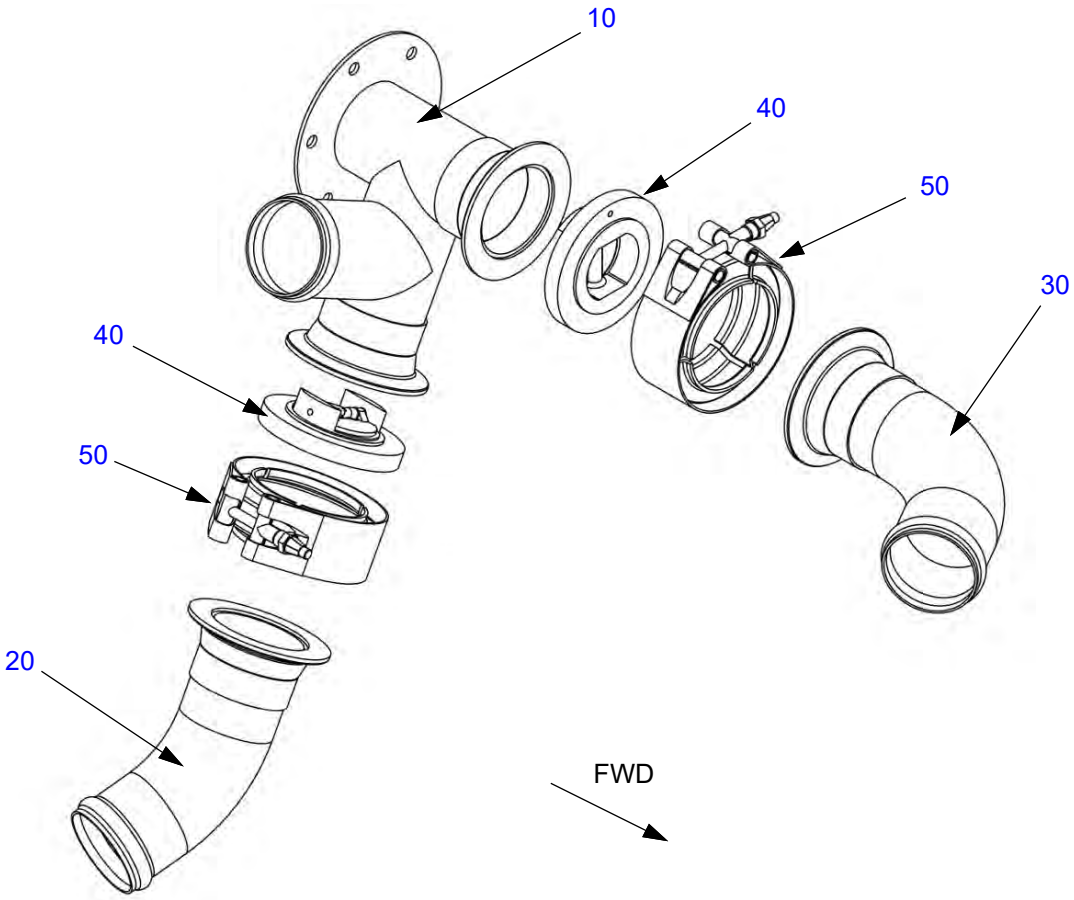

Table 21-30.3: Pressure Distribution Manifold, FWF

Figure Item Number	Part Number	Part Name	Effectivity Code	Amount in Assy.
10	AK21203100	Press, Circ, Manifold Weld Assy	K003 and On	1
20	AK21203200	Fresh Air Circ, Tube Weld Assy	K003 and On	1
30	AK21203300	Press Air, Manifold Weld Assy	K003 and On	1
40	PK99007034	Valve, Check	K003 and On	2
50	4562-150 or V02352295M-0234-S6	Clamp, Marman, SS	K003 and On	2

Figure 21-30.4: Pressure Distribution Manifold, FWA

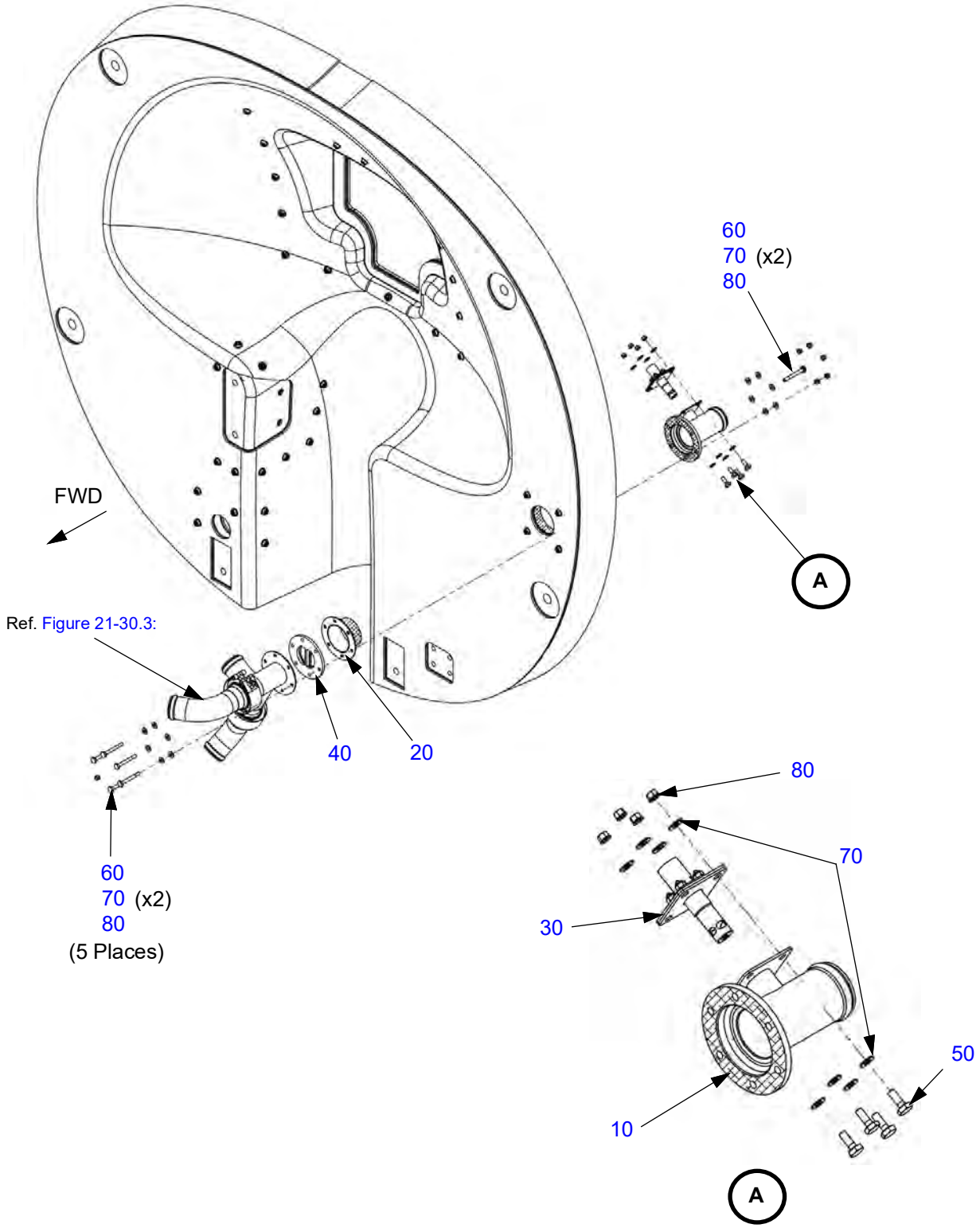

Table 21-30.4: Pressure Distribution Manifold, FWA

Figure Item Number	Part Number	Part Name	Effectivity Code	Amount in Assy.
10	AK21203400	Flange, Pres Circ, Weld Assy	K003 and On	1
20	AK21203900	Firewall, Manifold Valve, Coupler Assy	K003 and On	1
30	PK99007035	Duct Temperature Sensor/Switch	K003 and On	1
40	PK99007045	Valve, Check	K003 and On	1
50	AN3-4A	Bolt, 10-32 x 17/32” Undrilled	K003 and On	4
60	AN3-15A	Bolt, 10-32 x 1-21/32” Undrilled	K003 and On	6
70	NAS1149F0332P	Washer, Flat #10 x 0.032	K003 and On	20
80	MS21042L3	Nut, Self-locking, 45 Deg., Reduced #10-32	K003 and On	10

Figure 21-30.5: Outflow Valves and Controller

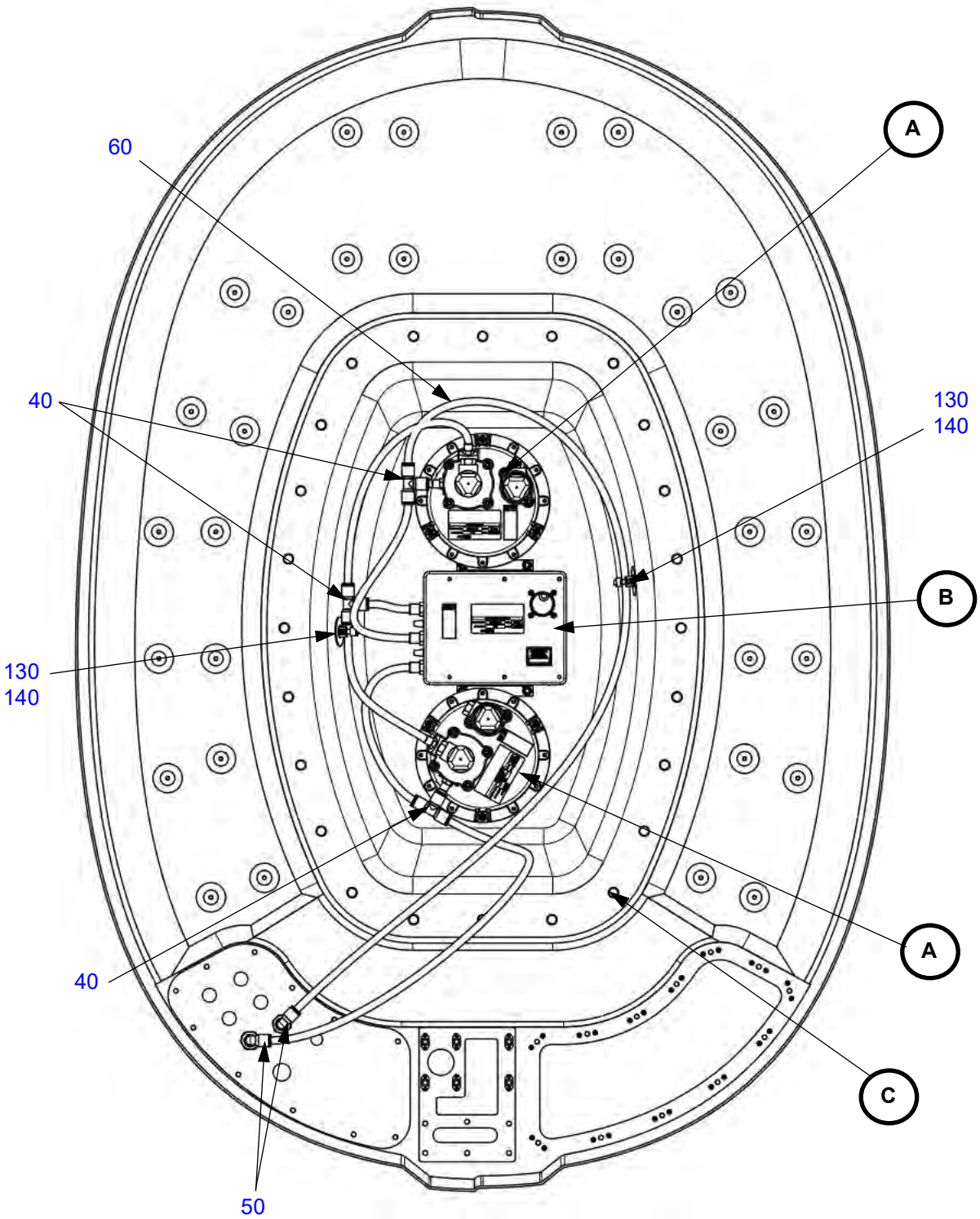

Figure 21-30.5: Outflow Valves and Controller (Continued)

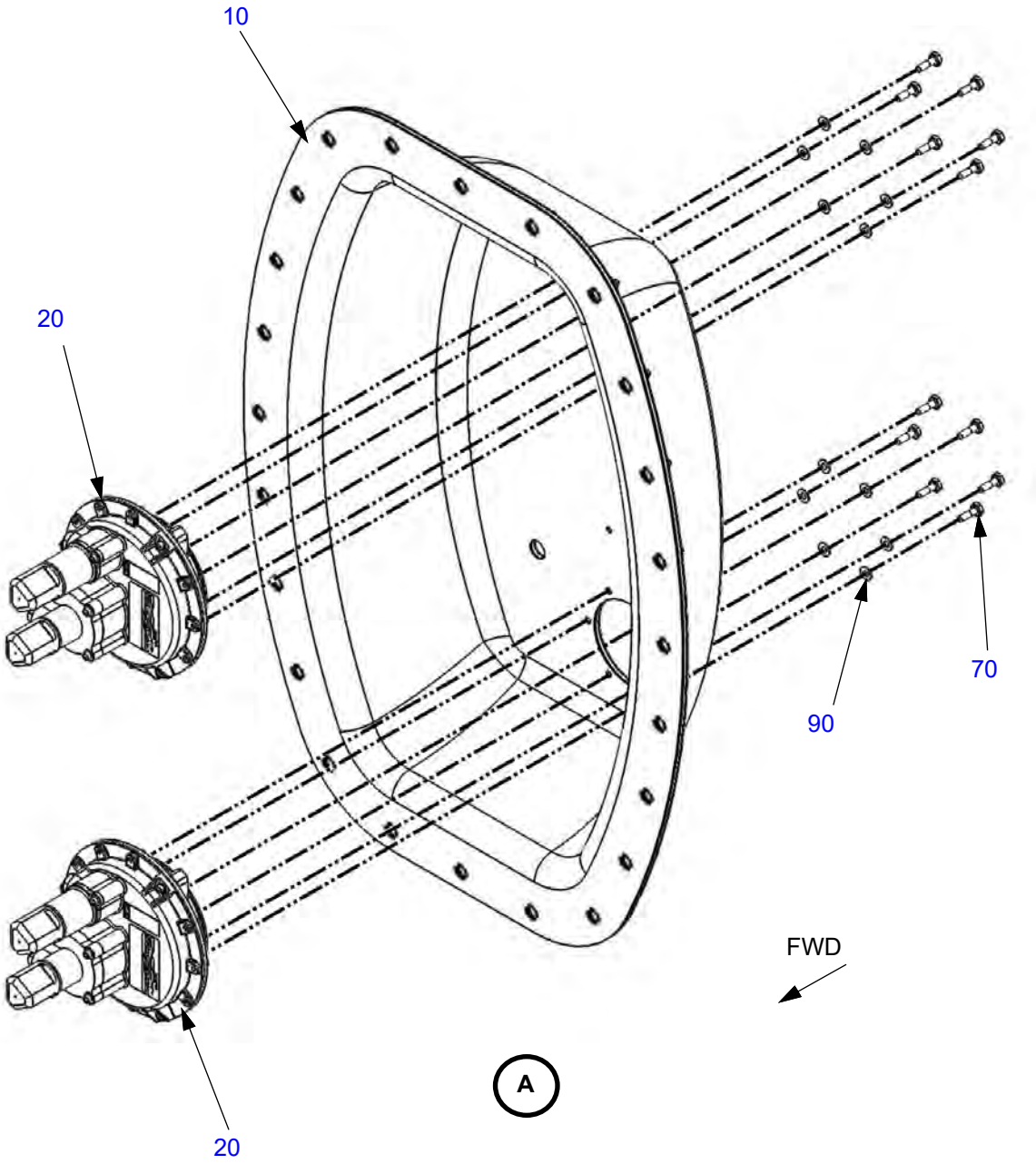

Figure 21-30.5: Outflow Valves and Controller (Continued)

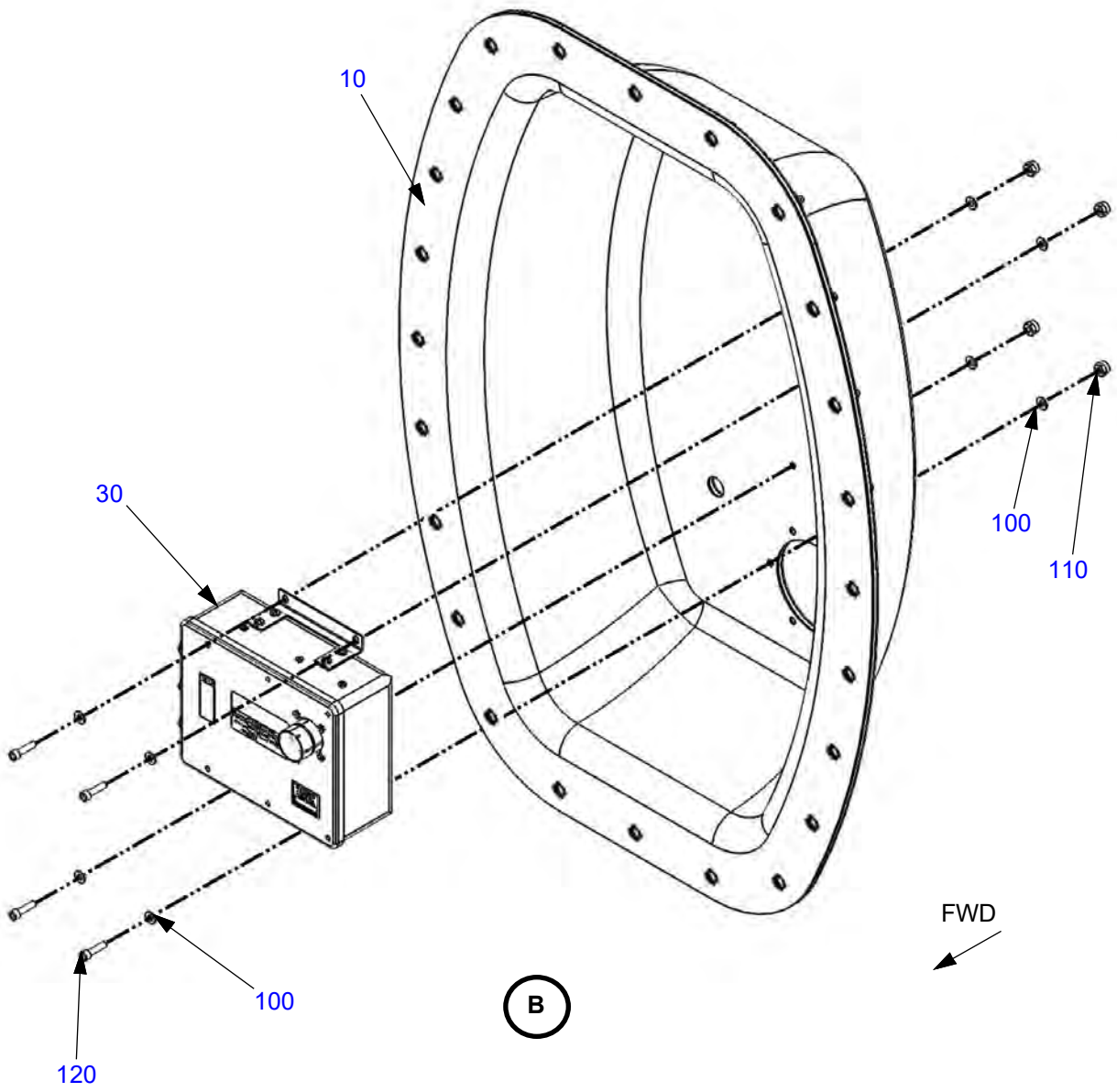

Figure 21-30.5: Outflow Valves and Controller (Continued)

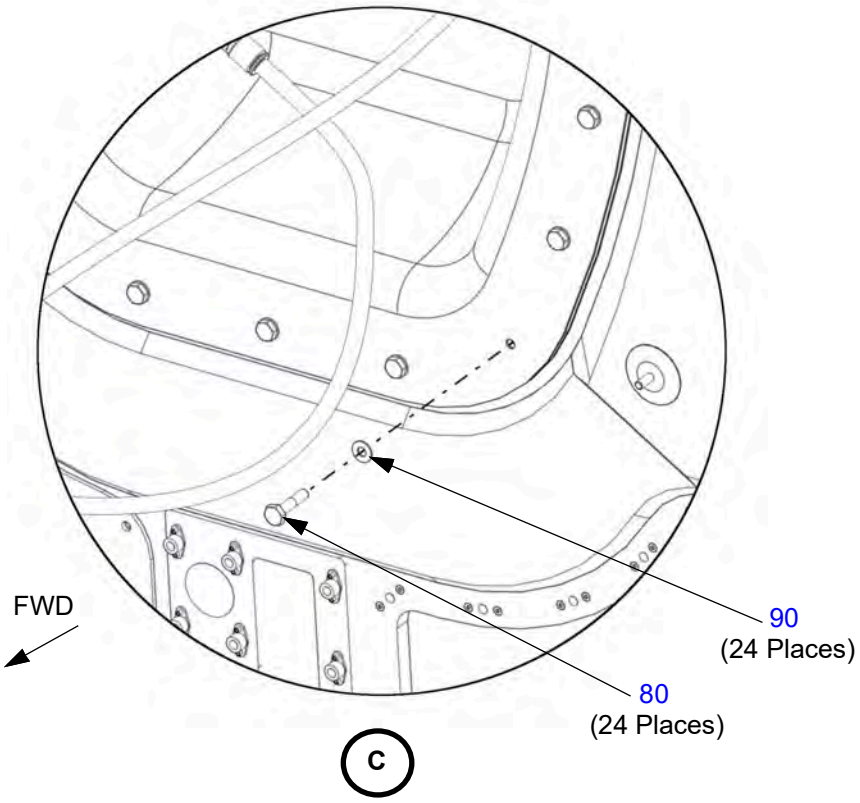

Table 21-30.5: Outflow Valves and Controller

Figure Item Number	Part Number	Part Name	Effectivity Code	Amount in Assy.
10	PK21300001	Access Panel, Pressure Bulkhead	K003 and On	1
20	PK99007055	Outflow Valve	K003 and On	2
30	PK99007053	Cabin Air Controller	K003 and On	1
40	PK99005101	Union Tee-Tube	K003 and On	3
50	PK99005103	Equal Bulkhead Elbow	K003 and On	2
60	PK99005104	Flexible Nylon Tubing	K003 and On	A/R
70	AN3H5A	Bolt, 10-32 x 21/32” Undrilled	K003 and On	12
80	AN3-7A	Bot, 10-32 x 29/32” Undrilled	K003 and On	24
90	NAS1149F0332P	Washer, Flat #10 x 0.032	K003 and On	36
100	NAS1149FN832P	Washer, Flat #8 x 0.032	K003 and On	8
110	MS21045L08	Nut, Self-locking, Steel, 0.164-32	K003 and On	4
120	NAS1352-08-11P	Screw, Socket Head 0.164-32 x 0.688	K003 and On	4
130	AS33671-2	Strap, Tiedown, Adjustable	K003 and On	A/R
140	NAS1352-08-11P	Swizel Cable Mount	K003 and On	A/R

This Page Intentionally Left Blank

HEADING

Figure 21-40.1: Temperature Control Valve (K003-K014)

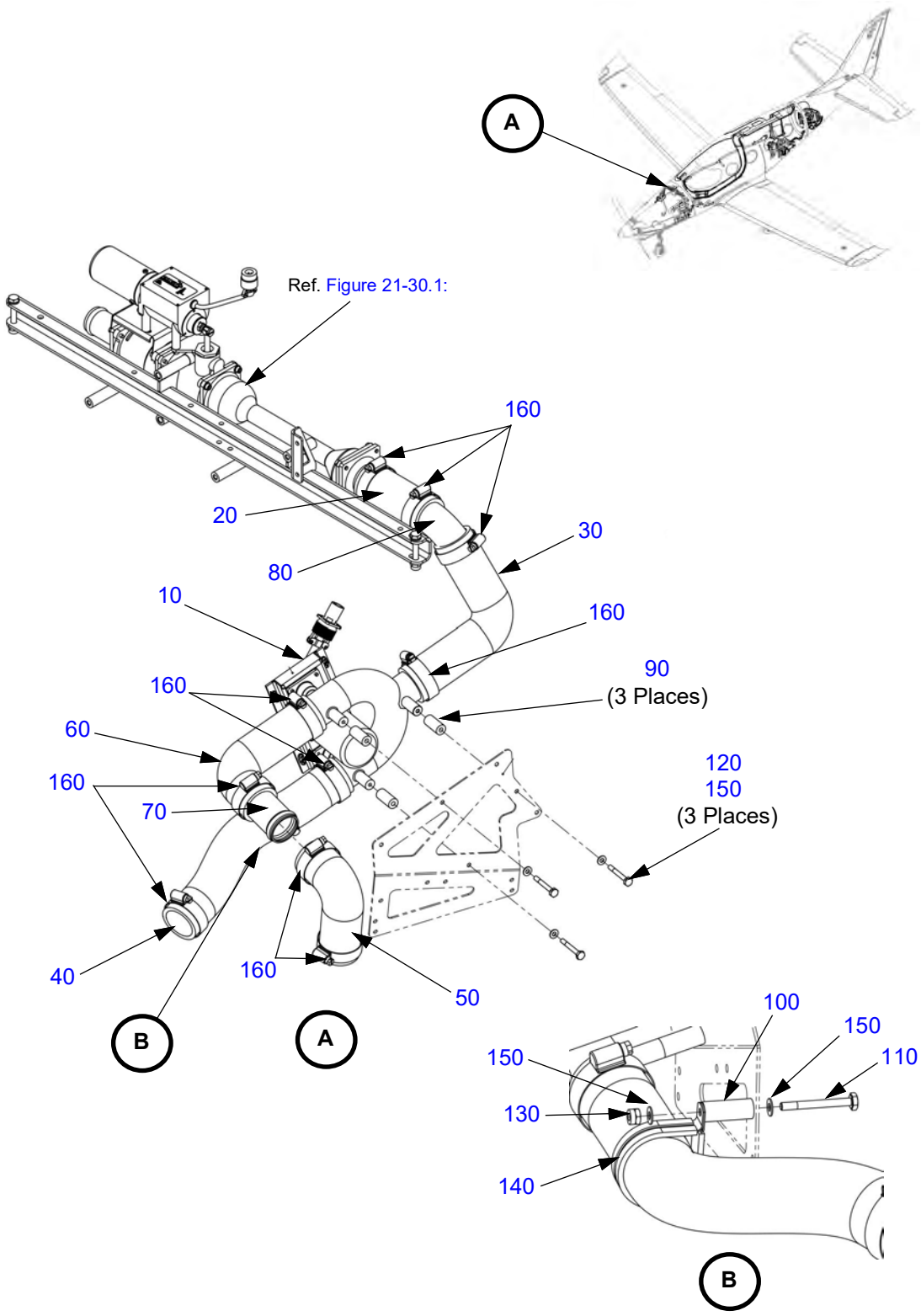

Table 21-40.1: Temperature Control Valve (K003-K014)

Figure Item Number	Part Number	Part Name	Effectivity Code	Amount in Assy.
10	PK99007041	Temp Control valve	K003-K014	1
20	PK99610010	Hose, Silicone, Straight, 1.5 ID	K003-K014	1
30	PK99610018	Hose, Silicone, 90º Elbow, 1.5 ID	K003-K014	1
40	PK99610020	Hose, Silicone, Straight, 1.5 ID	K003-K014	1
50	PK99610021	Hose, Silicone, 90º Elbow, 1.5 ID	K003-K014	1
60	PK99610023	Hose, Silicone, 90º Elbow, 1.5 ID	K003-K014	1
70	PK21200001	Tube, Joiner, 1.5 ID	K003-K014	1
80	PK21200002	Tube, 60º Elbow, 1.5 Dia	K003-K014	1
90	PK21401001	Stdoff, Upper Lft, 2nd Stage Intercooler Mnt	K003-K014	3
100	PK21401002	Stdoff, Upper Lft, 2nd Stage Intercooler Mnt	K003-K014	1
110	AN3-16A	Bolt, 10-32 x 1-25/32” Undrilled	K003-K014	1
120	AN3H14A	Bolt, 10-32 x 1-17/32” Drilled Head	K003-K014	3
130	MS21045L3	Nut, Self-locking, Steel, 10-32	K003-K014	1
140	AS21919WCJ30	Clamp, Loop Type, Cushioned, CRES, 1.875 Diam.	K003-K014	1
150	NAS1149F0332P	Washer, Flat #10 x 0.032	K003-K014	5
160	MS35842-12	Clamp, Hose	K003-K014	10

Figure 21-40.2: Temperature Control Valve (K015 and On)

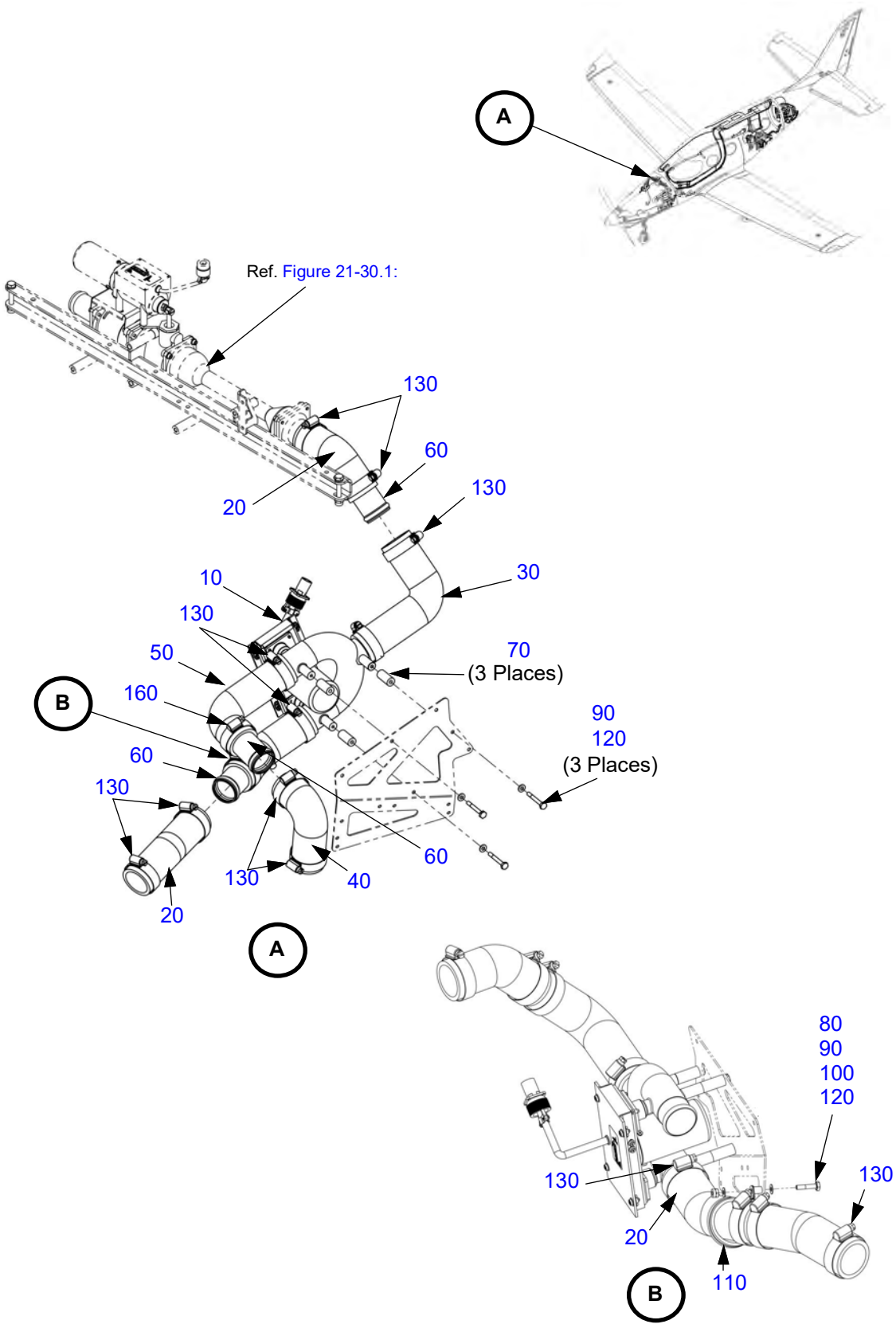

Table 21-40.2: Temperature Control Valve (K015 and On)

Figure Item Number	Part Number	Part Name	Effectivity Code	Amount in Assy.
10	PK99007041	Temp Control valve	K015 and On	1
20	PK99610012	Hose, Silicone, 45º Elbow, 1.5 ID	K015 and On	3
30	PK99610018	Hose, Silicone, 90º Elbow, 1.5 ID	K015 and On	1
40	PK99610021	Hose, Silicone, 90º Elbow, 1.5 ID	K015 and On	1
50	PK99610023	Hose, Silicone, 90º Elbow, 1.5 ID	K015 and On	1
60	PK21200001	Tube, Joiner, 1.5 ID	K015 and On	3
70	PK21401001	Stdoff, Upper Lft, 2nd Stage Intercooler Mnt	K015 and On	3
80	NAS43DD3-25N	Spacer, Aluminum .214 I.D. x .312 O.D. x .391	K015 and On	1
90	AN3-7A	Bolt, 10-32 x 29/32" Undrilled	K015 and On	4
100	MS21045L3	Nut, Self-locking, Steel, 10-32	K015 and On	1
110	AS21919WCJ30	Clamp, Loop Type, Cushioned, CRES, 1.875 Diam.	K015 and On	1
120	NAS1149F0332P	Washer, Flat #10 x 0.032	K015 and On	5
130	MS35842-12	Clamp, Hose	K015 and On	12

Figure 21-40.3: Temperature Controller

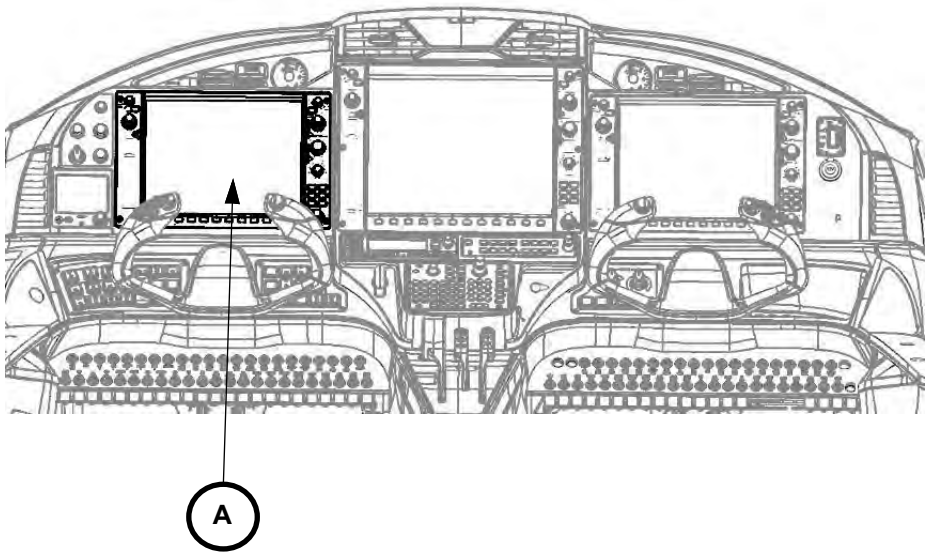

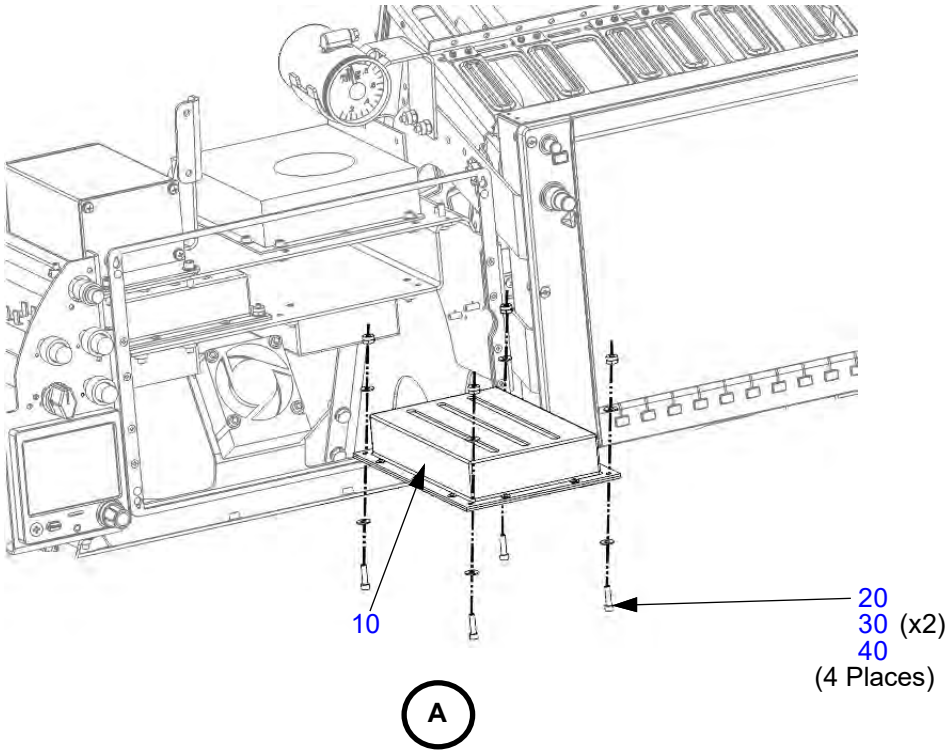

Table 21-40.3: Temperature Controller

Figure Item Number	Part Number	Part Name	Effectivity Code	Amount in Assy.
10	PK99007063	Temperature Controller, ECS	K003 and On	1
20	NAS1352-06-9P	Screw, Socket Head .138-32 x .563	K003 and On	4
30	NAS1149FN632P	Washer, Flat #6 x .032	K003 and On	8
40	MS21044N06	Nut, Self-locking, Steel .138-32	K003 and On	4

Figure 21-50.1: Fresh Air Fan

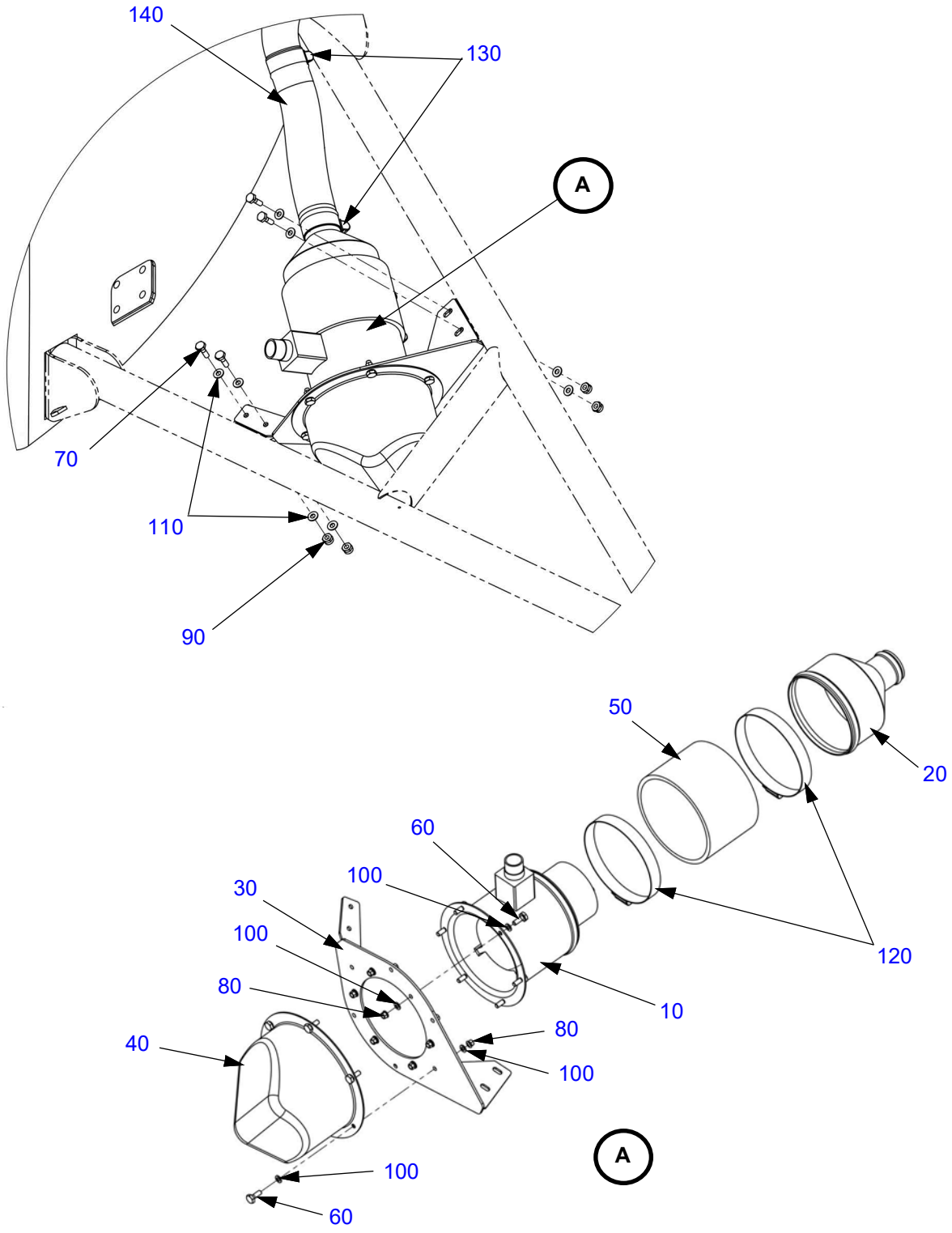

Table 21-50.1: Fresh Air Fan

Figure Item Number	Part Number	Part Name	Effectivity Code	Amount in Assy.
10	PK99007040	Fresh Air Fan	K003 and On	1
20	AK21205000	Reducer, Fresh Air Fan, ECS, Weld Assy	K003 and On	1
30	AK71405000	Fan, Fresh Air, Bracket Assy	K003 and On	1
40	PK21209001	Plenum, Fan, Fresh Air	K003 and On	1
50	PK99610029	Hose, Silicon, Straight, 4 1/8" ID	K003 and On	1
60	AN3-4A	Bolt, 10-32 x 17/32” Undrilled	K003 and On	12
70	AN3-5A	Bolt, 10-32 x 21/32" Undrilled	K003 and On	4
80	MS21042L3	Nut, Self-locking, 450°, Reduced #10-32	K003 and On	12
90	MS21045L3	Nut, Self-locking, Steel, 10-32	K003 and On	4
100	NAS620C10L	Washer, Reduced OD, CRES, .195 ID x .354 OD	K003 and On	24
110	NAS1149F0332P	Washer, Flat #10 x 0.032	K003 and On	8
120	MS35842-16	Clamp, Hose	K003 and On	2
130	MS35842-12	Clamp, Hose	K003 and On	2
140	SCEET-6	Sceet-6, 1.5" ID	K003 and On	A/R

Figure 21-50.2: Cool Air System

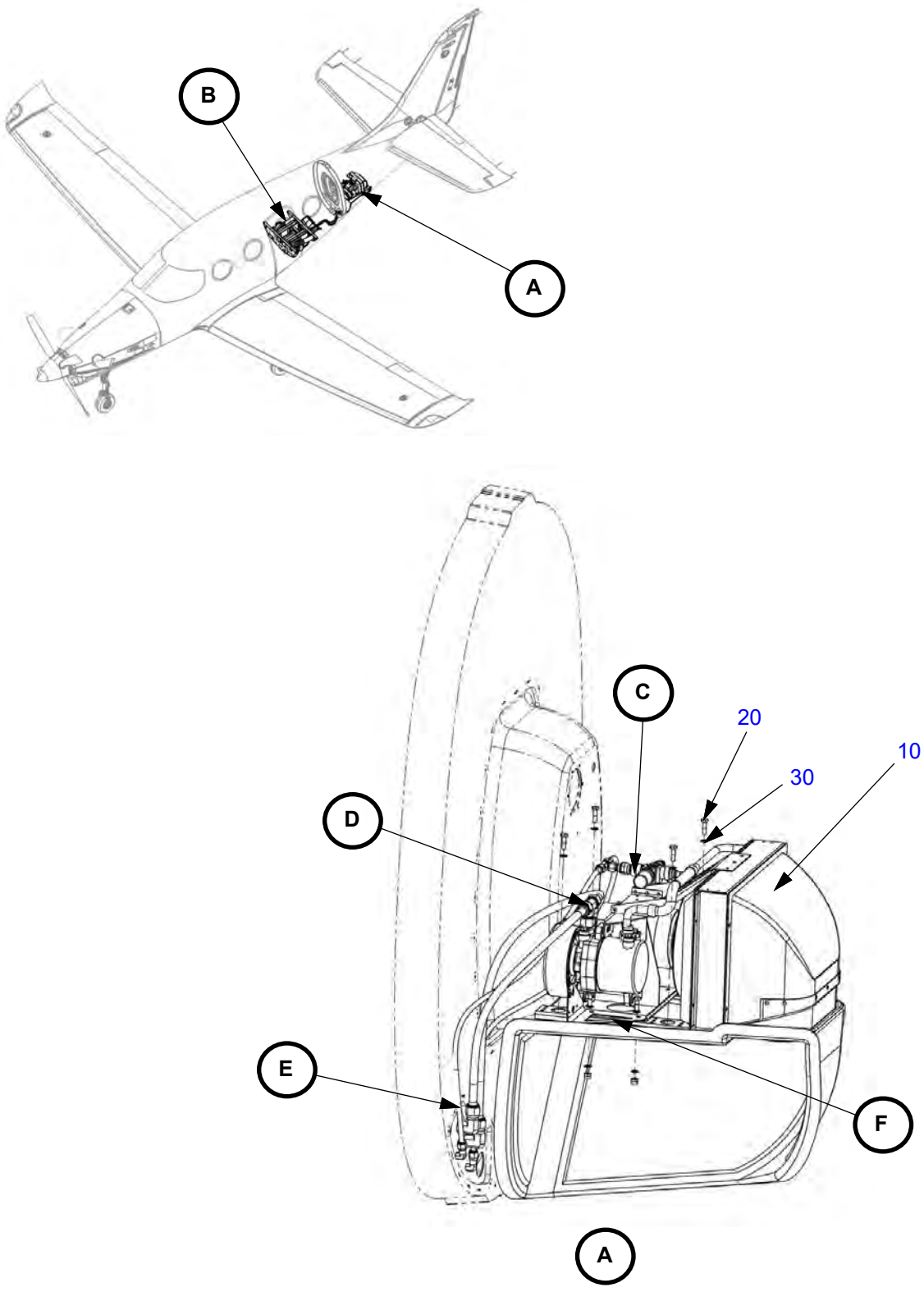

Figure 21-50.2: Cool Air System (Continued)

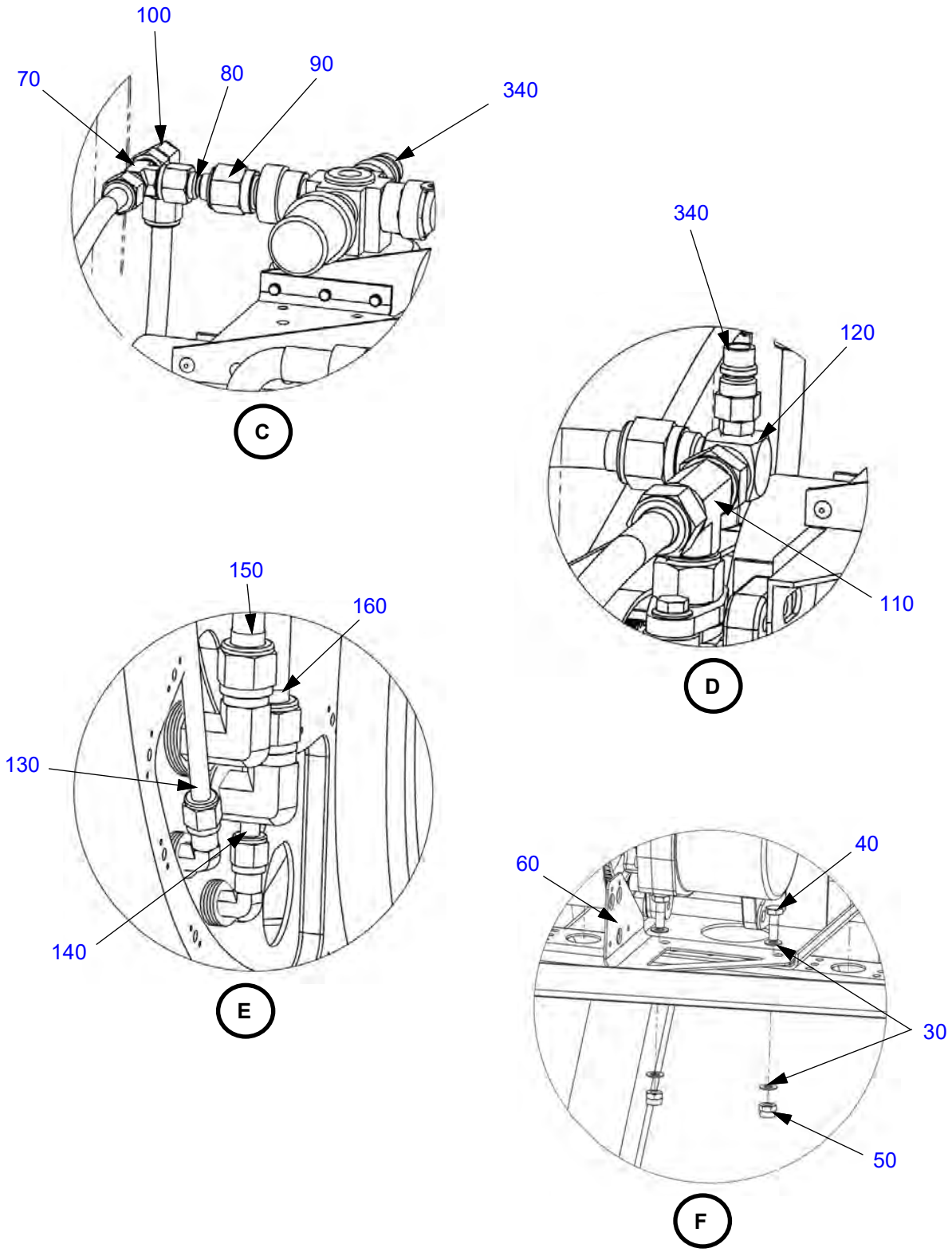

Figure 21-50.2: Cool Air System (Continued)

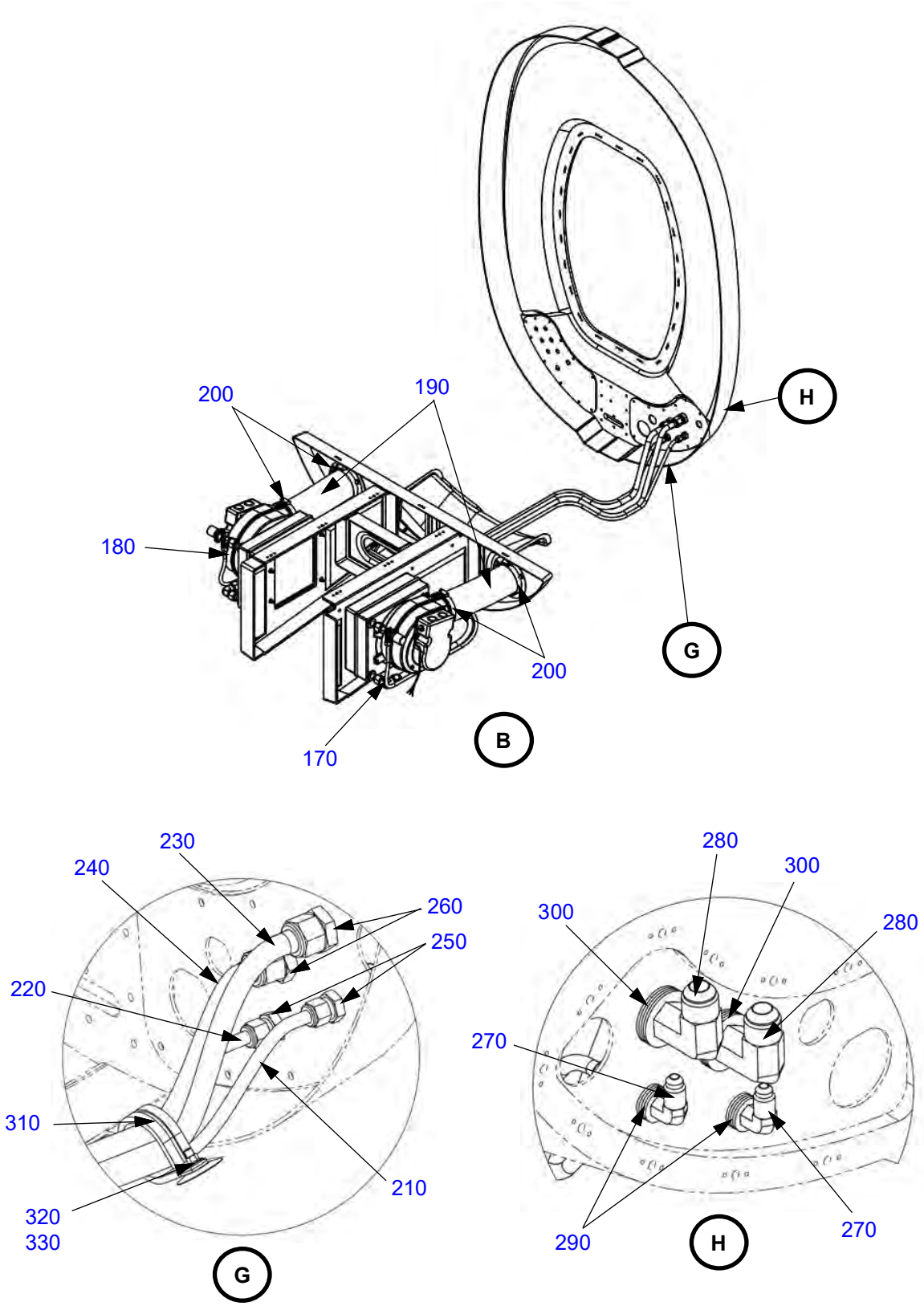

Table 21-50.2: Cool Air System

Figure Item Number	Part Number	Part Name	Effectivity Code	Amount in Assy.
10	1134410-19	Compressor Module, Enviro Systems	K003 and On	1
20	AN4-6A	Bolt, 1/4-28 x 29/32" Undrilled	K003 and On	4
30	NAS1149F0432P	Washer, Flat 1/4 x .032	K003 and On	8
40	AN4-5A	Bolt, 1/4-28 x 25/32" Undrilled	K003 and On	2
50	MS21045L4	Nut, Self-locking, Steel 1/4-28	K003 and On	2
60	PK21100001	Bracket, Circuit Breakers	K003 and On	1
70	4 S6X-SS	37° Flare, Branch Tee	K003 and On	1
80	NAS1564D6-4	Reducer, Flared, 1/2 To 1/4 Tube	K003 and On	1
90	AN818-6W	Nut, Tube, Coupling, Short, Aluminum, 3/8" OD Tube	K003 and On	1
100	4 C6X-SS	Parker: Fitting, 90 Deg Swivel, Male - Female Flare, 1/4" OD Tube	K003 and On	1
110	8 S6X-SS	37° Flare, Branch Tee	K003 and On	1
120	PK99007061	Fitting, Special (90° Swivel)	K003 and On	1
130	101001-4CR-0260	Hose Assembly, 26" Long, Parker Stratoflex	K003 and On	1
140	101001-4CR-0280	Hose Assembly, 28" Long, Parker Stratoflex	K003 and On	1
150	101001-8CR-0220	Hose Assembly, 22" Long, Parker Stratoflex	K003 and On	1
160	101001-8CR-0240	Hose Assembly, 24" Long, Parker Stratoflex	K003 and On	1
170	1134200-71	Evaporator Module, Enviro Systems, Left (Note: Evaporator mounting hardware is provided with the evaporator module assembly.)	K003 and On	1
180	1134200-73	Evaporator Module, Enviro Systems, Right (Note: Evaporator mounting hardware is provided with the evaporator module assembly.)	K003 and On	1

Figure Item Number	Part Number	Part Name	Effectivity Code	Amount in Assy.
190	SCAT 12	Scat-12, 3" ID	K003 and On	A/R
200	MS35842-14	Clamp, Hose	K003 and On	4
210	101001-4CR-0630	Hose Assembly, 63" Long, Parker Stratoflex	K003 and On	1
220	101001-4CR-0660	Hose Assembly, 66" Long, Parker Stratoflex	K003 and On	1
230	101001-8CR-0590	Hose Assembly, 59" Long, Parker Stratoflex	K003 and On	1
240	101001-8CR-0620	Hose Assembly, 62" Long, Parker Stratoflex	K003 and On	1
250	AS5178J04	Nut, Fitting, Steel, Ø.250 Tube x .438-20 Thread	K003 and On	2
260	AS5178J08	Nut, Fitting, Steel, Ø.500 Tube x .750-16 Thread	K003 and On	2
270	J514-4-20-70701SB, 4 WETX-SS	Elbow, 1/4 OD Tube, 90° Bulkhead, 37° Flared	K003 and On	2
280	J514-8-6-070701SB, 8 WETX-SS	Elbow, 1/2 OD Tube, 90° Bulkhead, 37° Flared	K003 and On	2
290	NAS1149C0763R	Washer, Flat 7/16 x .063	K003 and On	8
300	NAS1149C1290R	Washer, Flat 3/4 x .090	K003 and On	6
310	AS21919WDG24	Clamp, Loop Type, Cushioned, Ø 1.500	K003 and On	1
320	MS21042L3	Nut, Self-locking, 450°, Reduced #10-32	K003 and On	1
330	NAS1149F0332P	Washer, Flat #10 x .032	K003 and On	1
340	8081070047	Schrader Valve Core	K003 and On	2

This Page Intentionally Left Blank

CONTROL PANEL

Figure 21-60.1: Control Panel

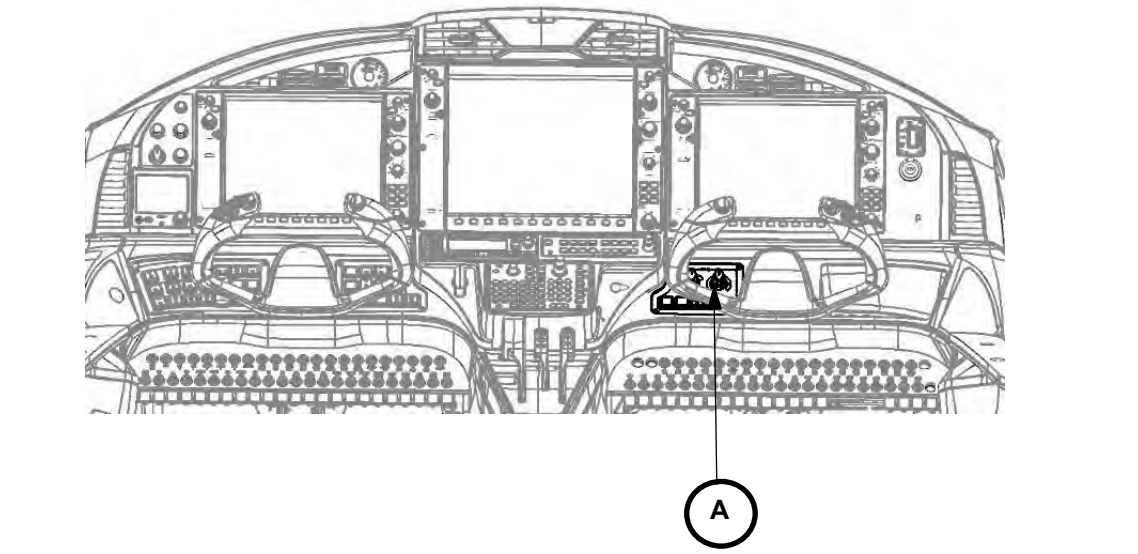

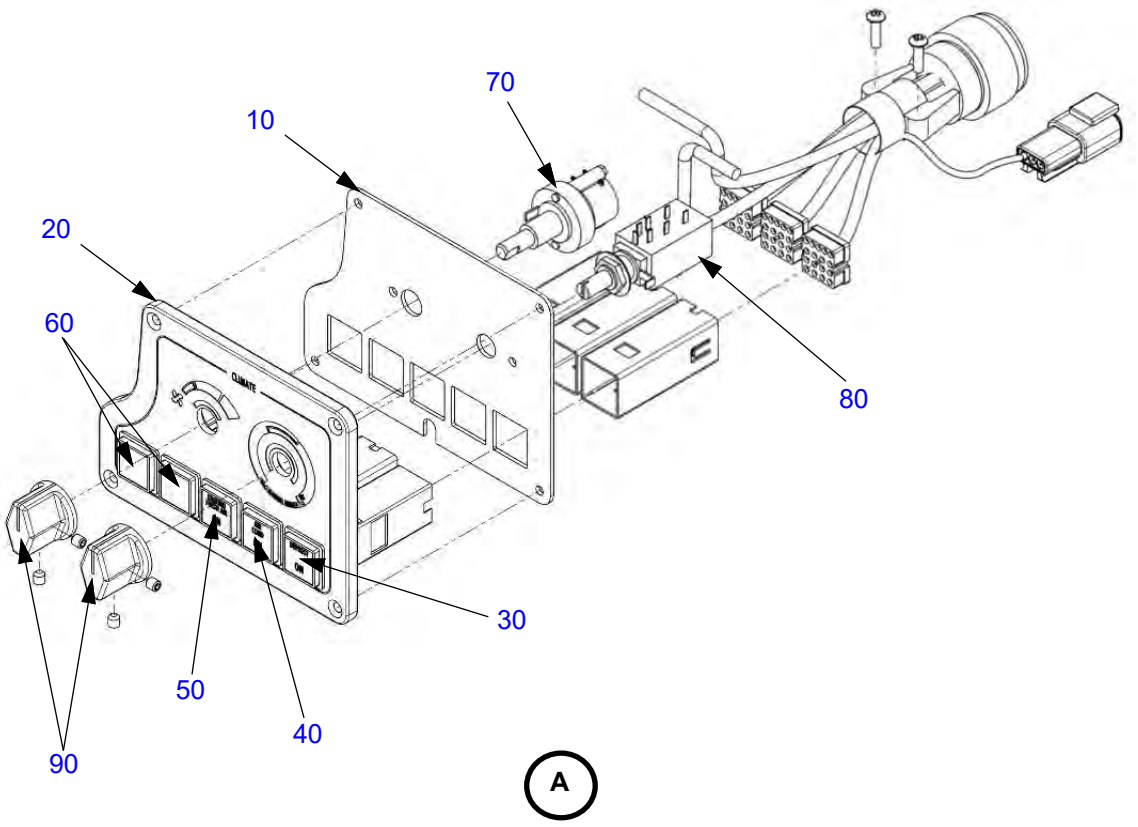

Table 21-60.1: Control Panel

Figure Item Number	Part Number	Part Name	Effectivity Code	Amount in Assy.
10	PK39105002	Switch Plate Support, Climate	K003and On	1
20	PK39105001	Lightplate, Panel, Switch, Climate	K003and On	1
30	PK99008132	DEFROST Switch	K003and On	1
40	PK99008130	AIR COND Switch	K003and On	1
50	PK99008131	GROUND FRESH AIR Switch	K003and On	1
60	PK99008135	Blank Switch	K003and On	2
70	PK99008160	Switch, Rotary, 3 Position	K003and On	1
80	PK99008163	Temperature Pot And Switch	K003and On	1
90	TL8507-03BA1	Knob, Tactile Series, 1/4" Hole, Black	K003and On	2
100*	MS24693-31B	Screw, Machine, C'sunk, Blk Oxide Ø .138 x 0.875	K003and On	4

*Panel installation screws not illustrated.

CHAPTER 22

Auto Flight

This Page Intentionally Left Blank

List of Effective Pages

Chapter/Section	Page Number	Effective Date
22-Title	Page 1	03 Apr 2020
22-Title	Page 2	03 Apr 2020
22-LOEP	Page 1	14 Jul 2021
22-LOEP	Page 2	03 Apr 2020
22-TOC	Page 1	14 Jul 2021
22-TOC	Page 2	03 Apr 2020
S-TEC Autopilot		
22-10	Page 1	14 Jul 2021
22-10	Page 2	14 Jul 2021
22-10	Page 3	03 Apr 2020
22-10	Page 4	14 Jul 2021
22-10	Page 5	03 Apr 2020
22-10	Page 6	03 Apr 2020
22-10	Page 7	03 Apr 2020
22-10	Page 8	14 Jul 2021
22-10	Page 9	03 Apr 2020
22-10	Page 10	14 Jul 2021
Garmin Autopilot		
22-11	Page 1	14 Jul 2021
22-11	Page 2	14 Jul 2021
22-11	Page 3	14 Jul 2021
22-11	Page 4	14 Jul 2021
22-11	Page 5	14 Jul 2021
22-11	Page 6	14 Jul 2021
22-11	Page 7	14 Jul 2021
22-11	Page 8	14 Jul 2021
22-11	Page 9	14 Jul 2021
22-11	Page 10	14 Jul 2021
22-11	Page 11	14 Jul 2021
22-11	Page 12	14 Jul 2021
22-11	Page 13	14 Jul 2021
22-11	Page14	14 Jul 2021
22-11	Page 15	14 Jul 2021
22-11	Page 16	14 Jul 2021

This Page Intentionally Left Blank

CHAPTER 22

Table of Contents

List of Effective Pages ..... 22-LOEP / Page 1
Table of Contents ..... 22-TOC / Page1

Paragraph **Page Number**

S-Tec Autopilot
(SN: K003-K010)

Figure 22-10.1: Roll Servo ..... 22-10 / Page 1
Table 22-10.1: Roll Servo ..... 22-10 / Page 2
Figure 22-10.2: Auto Rudder Trim Computer ..... 22-10 / Page 3
Table 22-10.2: Auto Rudder Trim Computer ..... 22-10 / Page 4
Figure 22-10.3: Pitch, Yaw, and Pusher Servos ..... 22-10 / Page 5
Table 22-10.3: Pitch, Yaw, and Pusher Servos ..... 22-10 / Page 8
Figure 22-10.4: Autopilot Controller ..... 22-10 / Page 9
Table 22-10.4: Autopilot Controller ..... 22-10 / Page 10

Garmin Autopilot
(SN: K011 and On, and K003-K010 with SB-0017)

Figure 22-11.1: Mode Controller ..... 22-11 / Page 1
Table 22-11.1: Mode Controller ..... 22-11 / Page 2
Figure 22-11.2: Trim Signal Adapter ..... 22-11 / Page 3
Table 22-11.2: Trim Signal Adapter ..... 22-11 / Page 4
Figure 22-11.3: Roll Servo ..... 22-11 / Page 5
Table 22-11.3: Roll Servo ..... 22-11 / Page 7
Figure 22-11.4: Yaw Servo ..... 22-11 / Page 8
Table 22-11.4: Yaw Servo ..... 22-11 / Page 10
Figure 22-11.5: Pitch Servo ..... 22-11 / Page 11
Table 22-11.5: Pitch Servo 22-11 / Page 13
Figure 22-11.6: Auto-Level Switch ..... 22-11 / Page 14
Table 22-11.6: Auto-Level Switch 22-11 / Page 15

This Page Intentionally Left Blank

S-TEC AUTOPILOT

Figure 22-10.1: Roll Servo

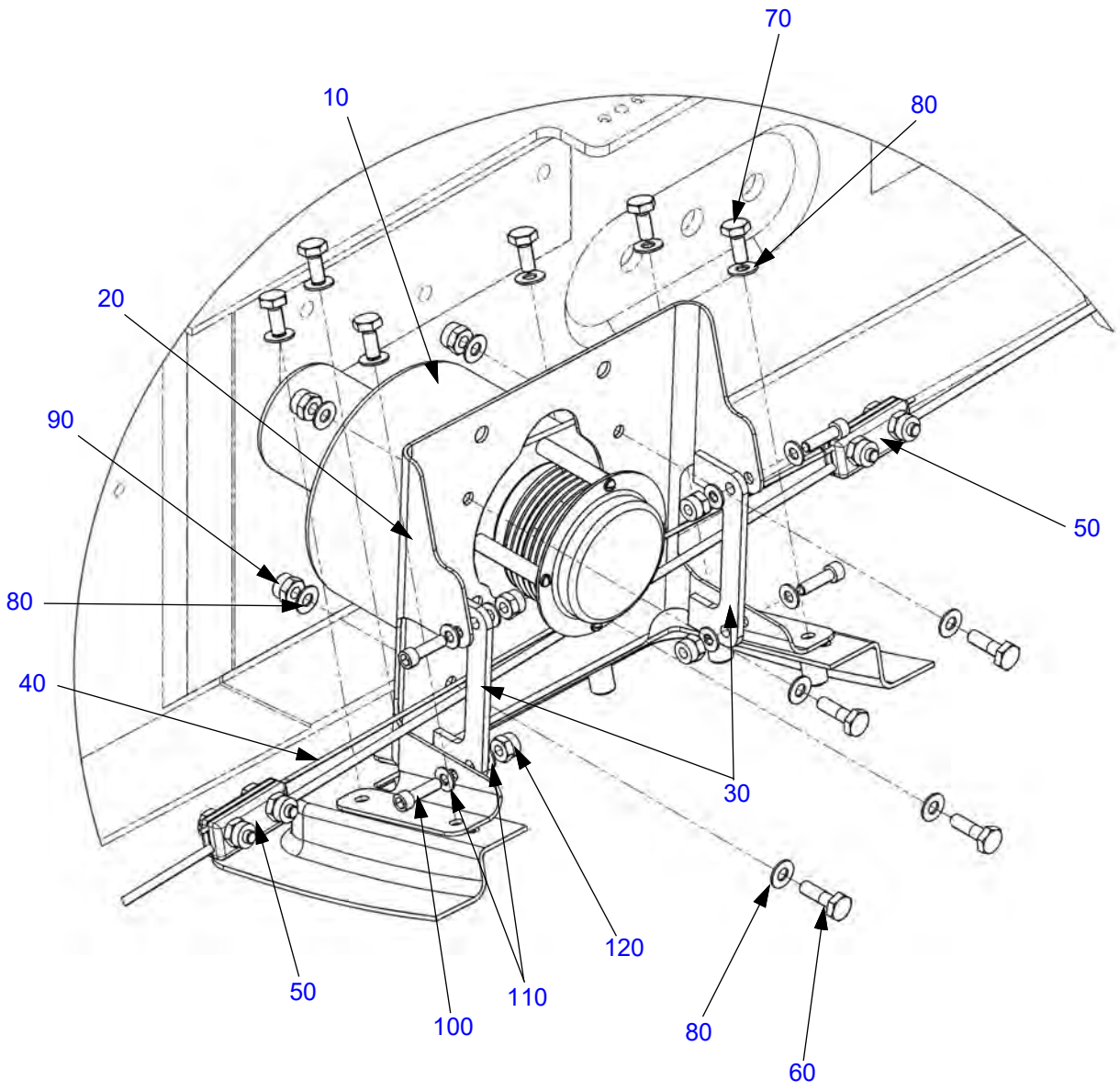

Table 22-10.1: Roll Servo

Figure Item Number	Part Number	Part Name	Effectivity Code	Amount in Assy.
10	0106-R2	Roll Servo, 28V Standard	K003 - K010	1
20	PK22100001	Aileron Servo Bracket	K003 - K010	1
30	PK22100006	Cable Fairlead, Autopilot	K003 - K010	2
40	PK99003011	Bridle Cable Assembly, Aileron	K003 - K010	1
50	AK99003012	Cable Clamp Assembly	K003 - K010	2
60	AN3-5A	Bolt, 10-32 x 21/32” Undrilled	K003 - K010	4
70	AN3-3A	Bolt, 10-32 x 15/32” Undrilled	K003 - K010	6
80	NAS1149F0332P	Washer, Flat #10 x 0.032	K003 - K010	14
90	MS21044N3	Nut, Self-locking, Steel, 10-32	K003 - K010	4
100	NAS1352-08-10P	Screw, Socket Head .164-32 x .625	K003 - K010	4
110	NAS1149FN832P	Washer, Flat #8 x .032	K003 - K010	8
120	MS21044N08	Nut, Self-locking, Steel .164-32	K003 - K010	4

Figure 22-10.2: Auto Rudder Trim Computer

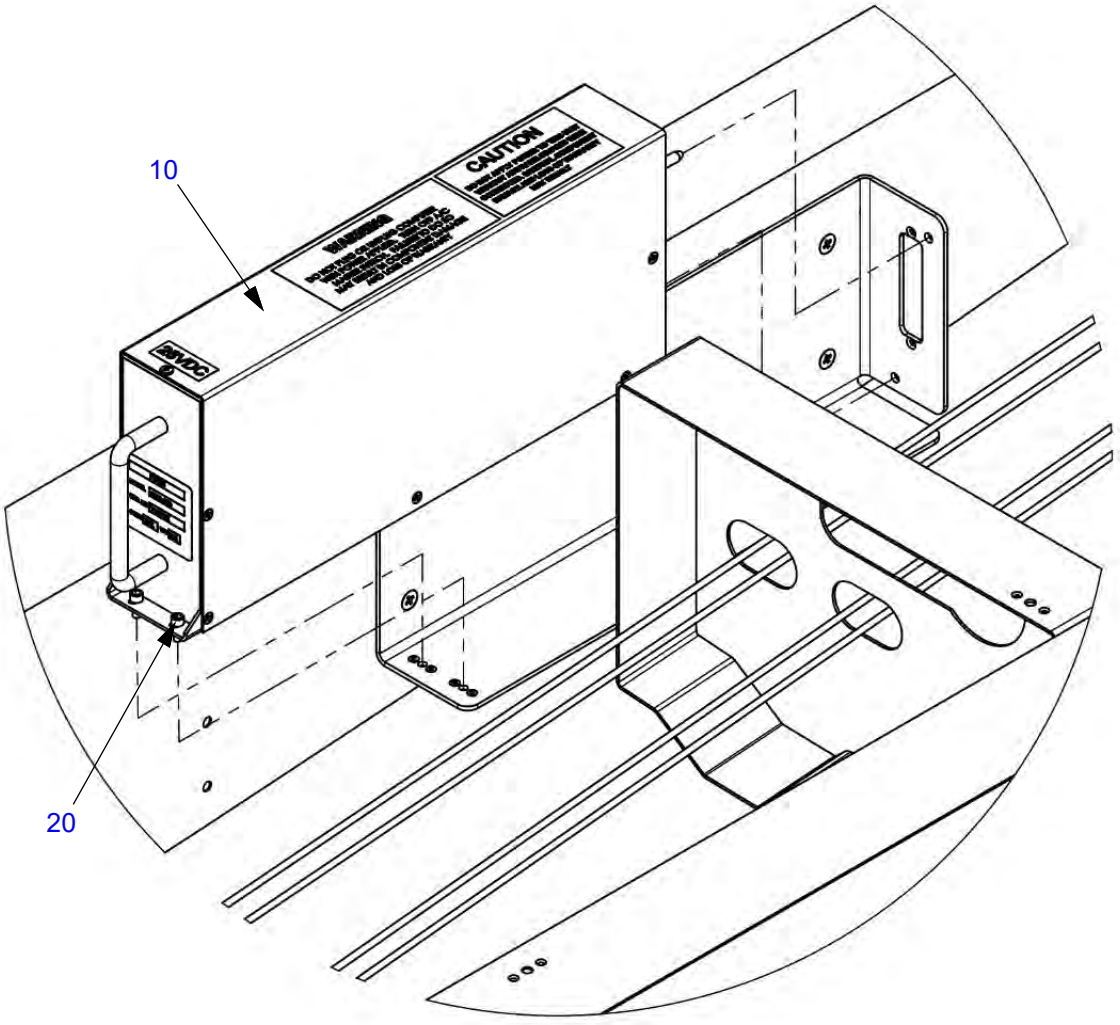

Table 22-10.2: Auto Rudder Trim Computer

Figure Item Number	Part Number	Part Name	Effectivity Code	Amount in Assy.
10	0110-1T	Computer, Pitch Flight Guidance	K003 - K010	1
20	NAS1352-06-6P	Screw, Socket Head, 0.138-32 x 0.375	K003 - K010	2

Figure 22-10.3: Pitch, Yaw, and Pusher Servos

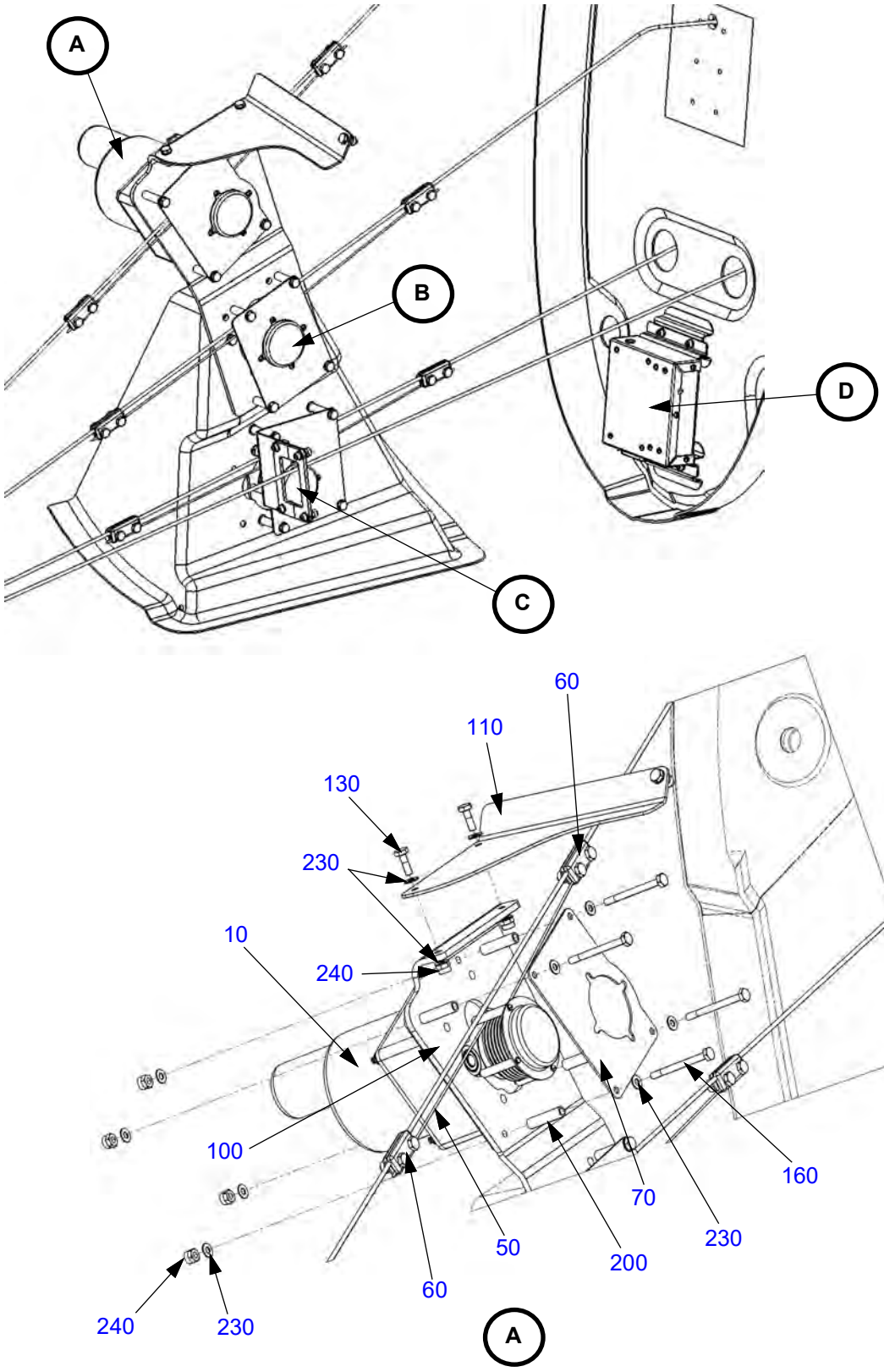

Figure 22-10.3: Pitch, Yaw, and Pusher Servos (Continued)

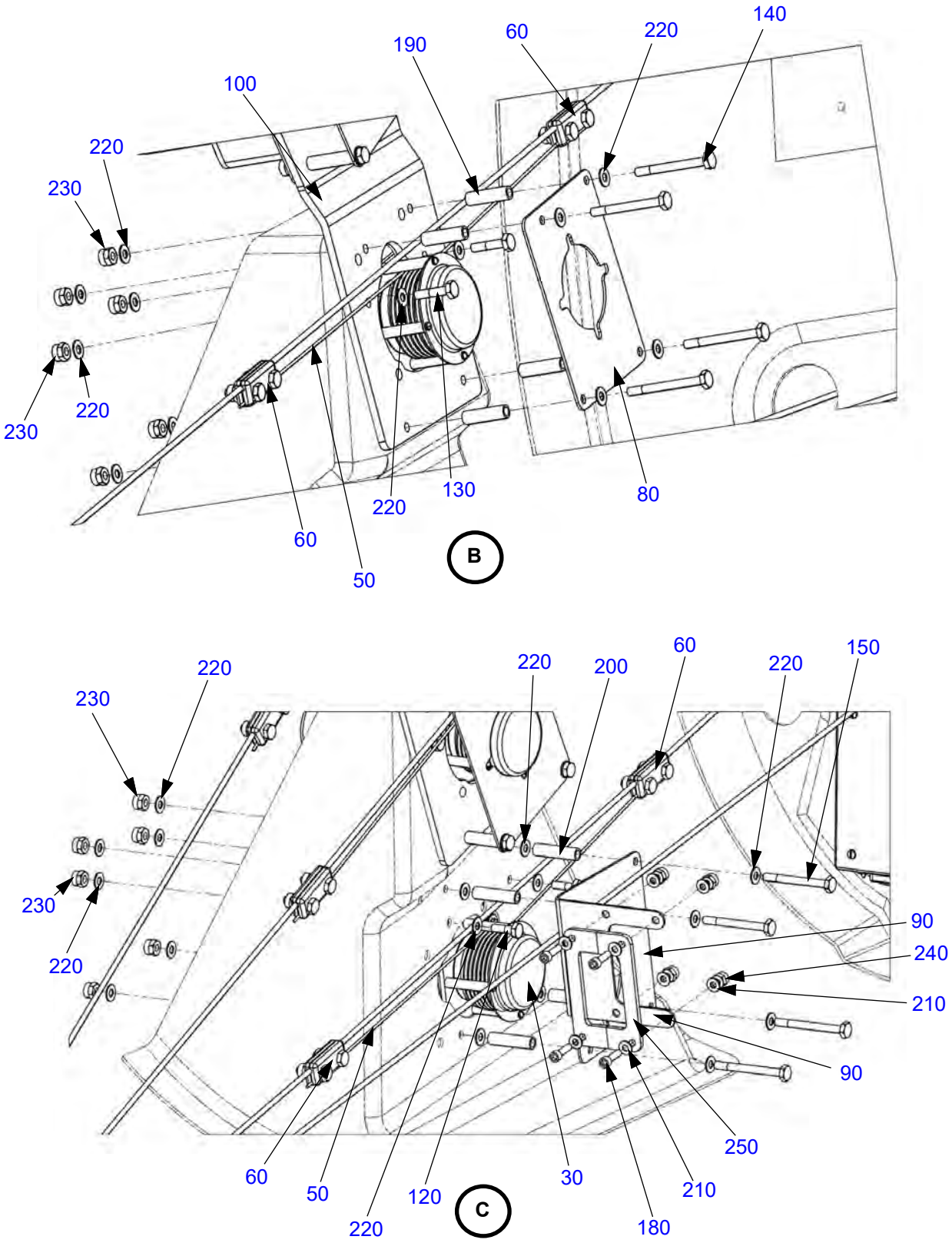

Figure 22-10.3: Pitch, Yaw, and Pusher Servos (Continued)

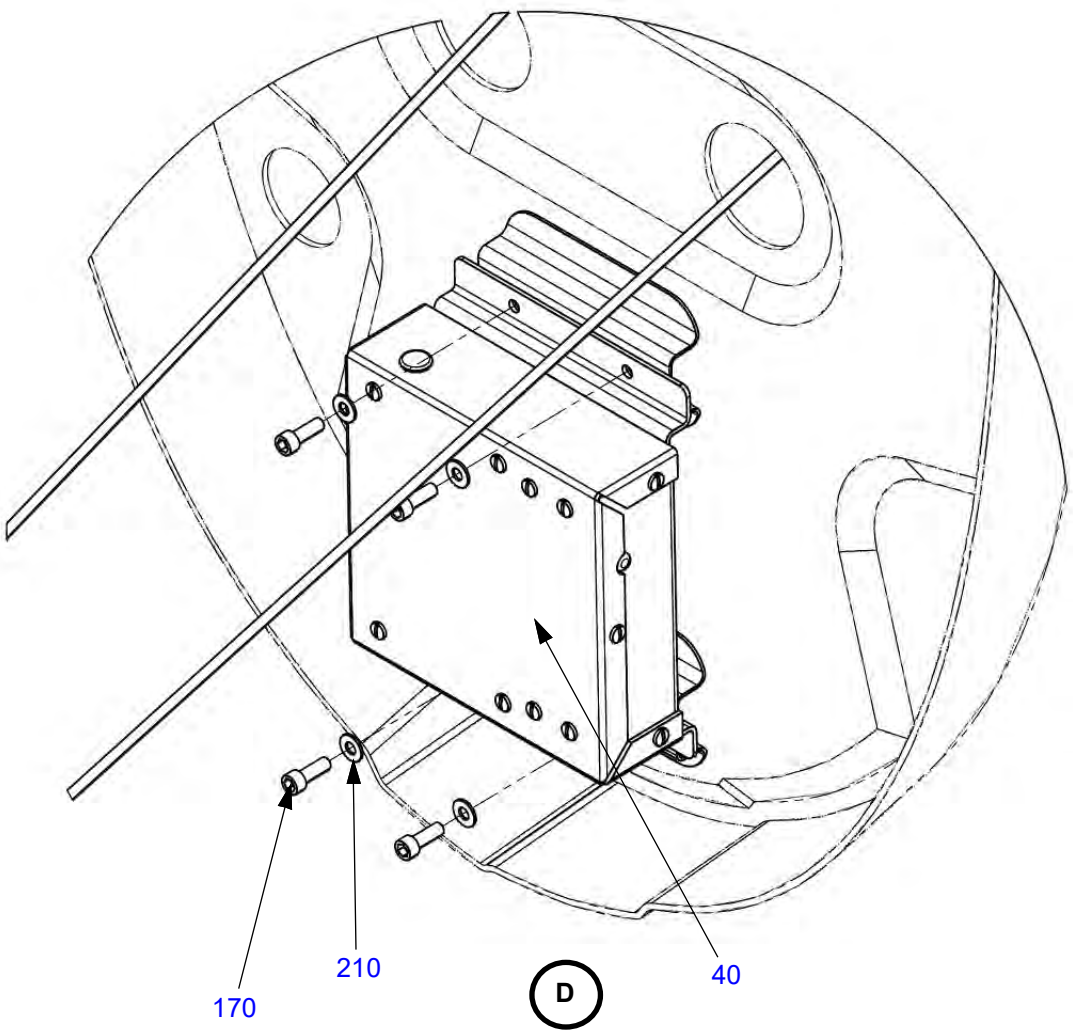

Table 22-10.3: Pitch, Yaw, and Pusher Servos

Figure Item Number	Part Number	Part Name	Effectivity Code	Amount in Assy.
10	01237-Y6	Pusher Servo, 28V, Standard	K003 - K010	1
20	0108-15-P4	Pitch Servo, 28V, Standard	K003 - K010	1
30	0108-15-P13	Yaw Servo, 28V, Standard	K003 - K010	1
40	0121-7	Yaw Damper Amplifier	K003 - K010	1
50	PK99003010	Bridle Cable Assembly	K003 - K010	3
60	AK99003012	Cable Clamp Assembly	K003 - K010	6
70	PK22100013	Cable Guard, Pusher Servo	K003 - K010	1
80	PK22100012	Cable Guard, Pitch Servo	K003 - K010	1
90	PK22100011	Cable Guard, Yaw Servo	K003 - K010	1
100	PK22100003	Pusher Servo Bracket	K003 - K010	1
110	PK22100004	Pusher Servo Brace	K003 - K010	1
120	AN3-5A	Bolt, 10-32 x 21/32” Undrilled	K003 - K010	5
130	AN3-7A	Bolt, 10-32 x 29/32” Undrilled	K003 - K010	2
140	AN3-17A	Bolt, 10-32 x 1-29/32” Undrilled	K003 - K010	4
150	AN3-20A	Bolt, 10-32 x 2-1/32” Undrilled	K003 - K010	4
160	AN3-21A	Bolt, 10-32 x 2-5/32” Undrilled	K003 - K010	4
170	NAS1352-08-8P	Screw, Socket Head 0.164-32 x 0.500	K003 - K010	4
180	NAS1352-08-10P	Screw, Socket Head 0.164-32 x 0.625	K003 - K010	4
190	NAS43DD3-71N	Spacer, Aluminum .214 ID x .312 OD x 1.109	K003 - K010	4
200	NAS43DD3-81N	Spacer, Aluminum .214 ID x .312 OD x 1.266	K003 - K010	8
210	NAS1149FN832P	Washer, Flat #8 x 0.032	K003 - K010	12
220	NAS1149F0332P	Washer, Flat #10 x 0.032	K003 - K010	41
230	MS21044N3	Nut, Self-locking, Steel 10-32	K003 - K010	25
240	MS21044N08	Nut, Self-locking, Steel .164-32	K003 - K010	4
250	PK22100015	Cable Fairlead, Autopilot, Aft Servo	K003 - K010	2

Figure 22-10.4: Autopilot Controller

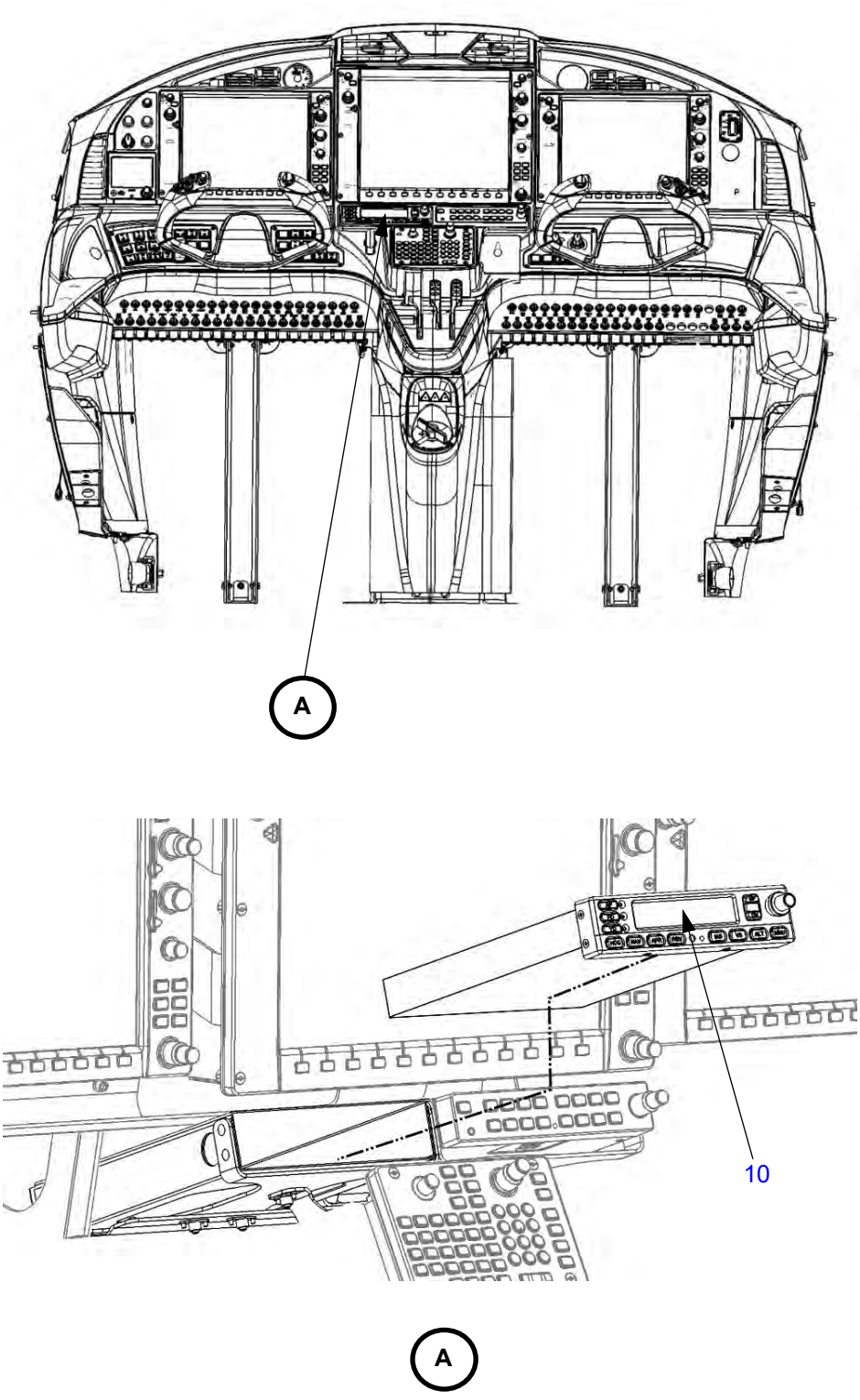

Table 22-10.4: Autopilot Controller

Figure Item Number	Part Number	Part Name	Effectivity Code	Amount in Assy.
10	01304-02-01-016 EP06	Digital Flight Control System	K003 - K010	1

GARMIN AUTOPILOT

Figure 22-11.1: Mode Controller

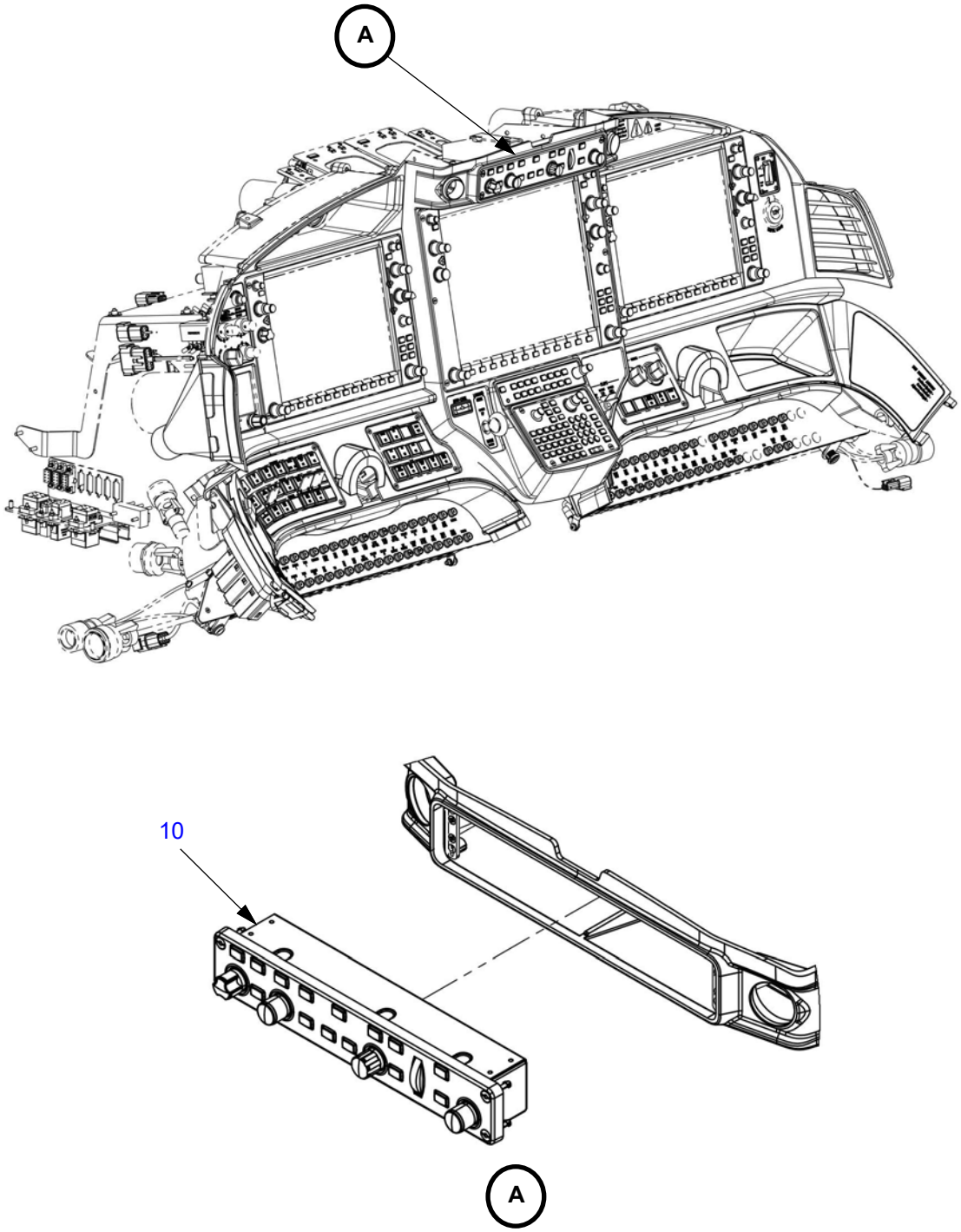

Table 22-11.1: Mode Controller

Figure Item Number	Part Number	Part Name	Effectivity Code	Amount in Assy.
10	011-01020-10	GMC 710 Control Head	K011 and On	1

* (Also SN:K003-K010 with SB-0017)

Figure 22-11.2: Trim Signal Adapter

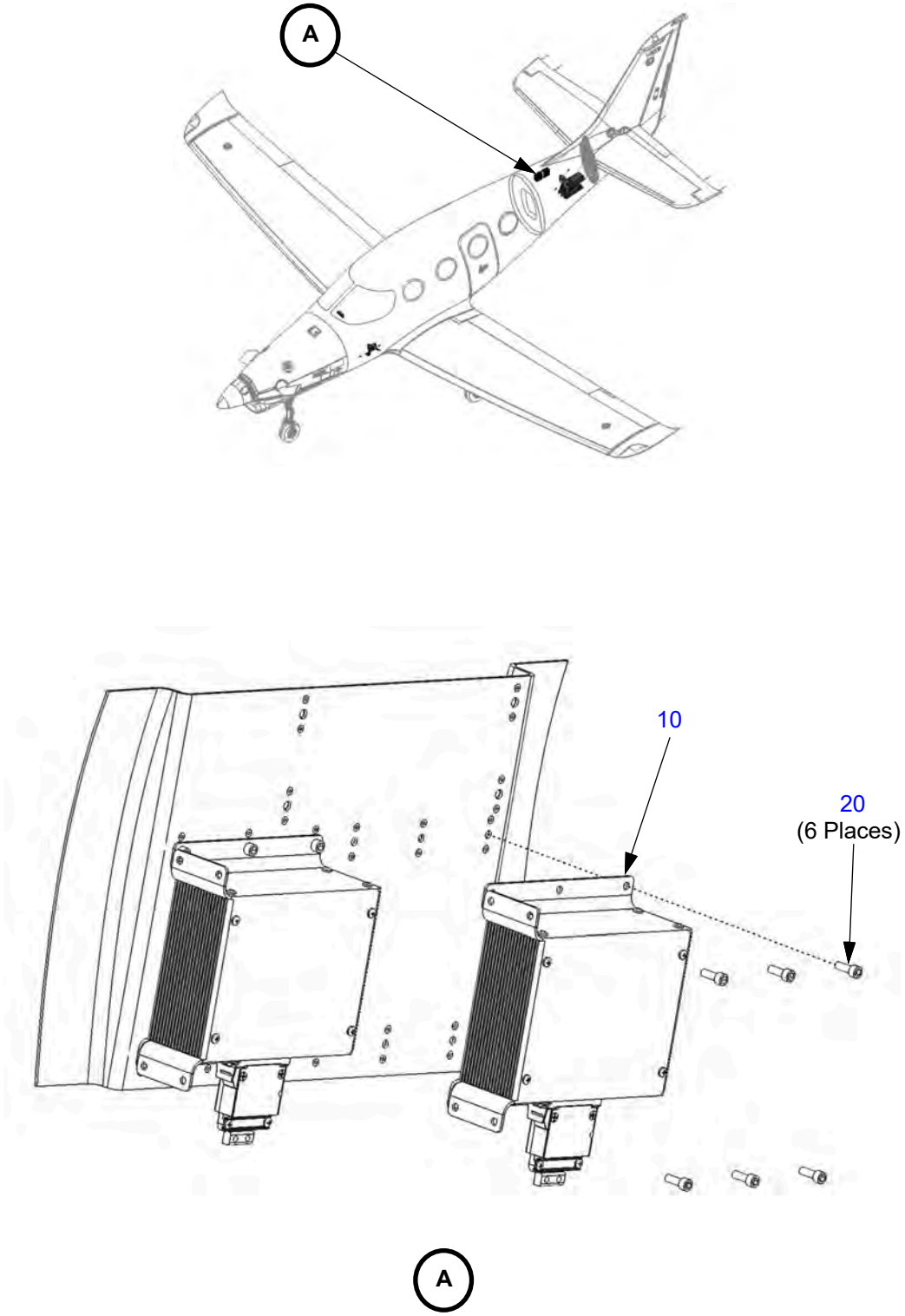

Table 22-11.2: Trim Signal Adapter

Figure Item Number	Part Number	Part Name	Effectivity Code	Amount in Assy.
10	011-00960-20	Signal Adapter, Trim, Garmin	K011 and On*	2
20	NAS1352-08-8P	Screw, Socket Head .164-32 x .500	K011 and On*	12

* (Also SN:K003-K010 with SB-0017)

Figure 22-11.3: Roll Servo

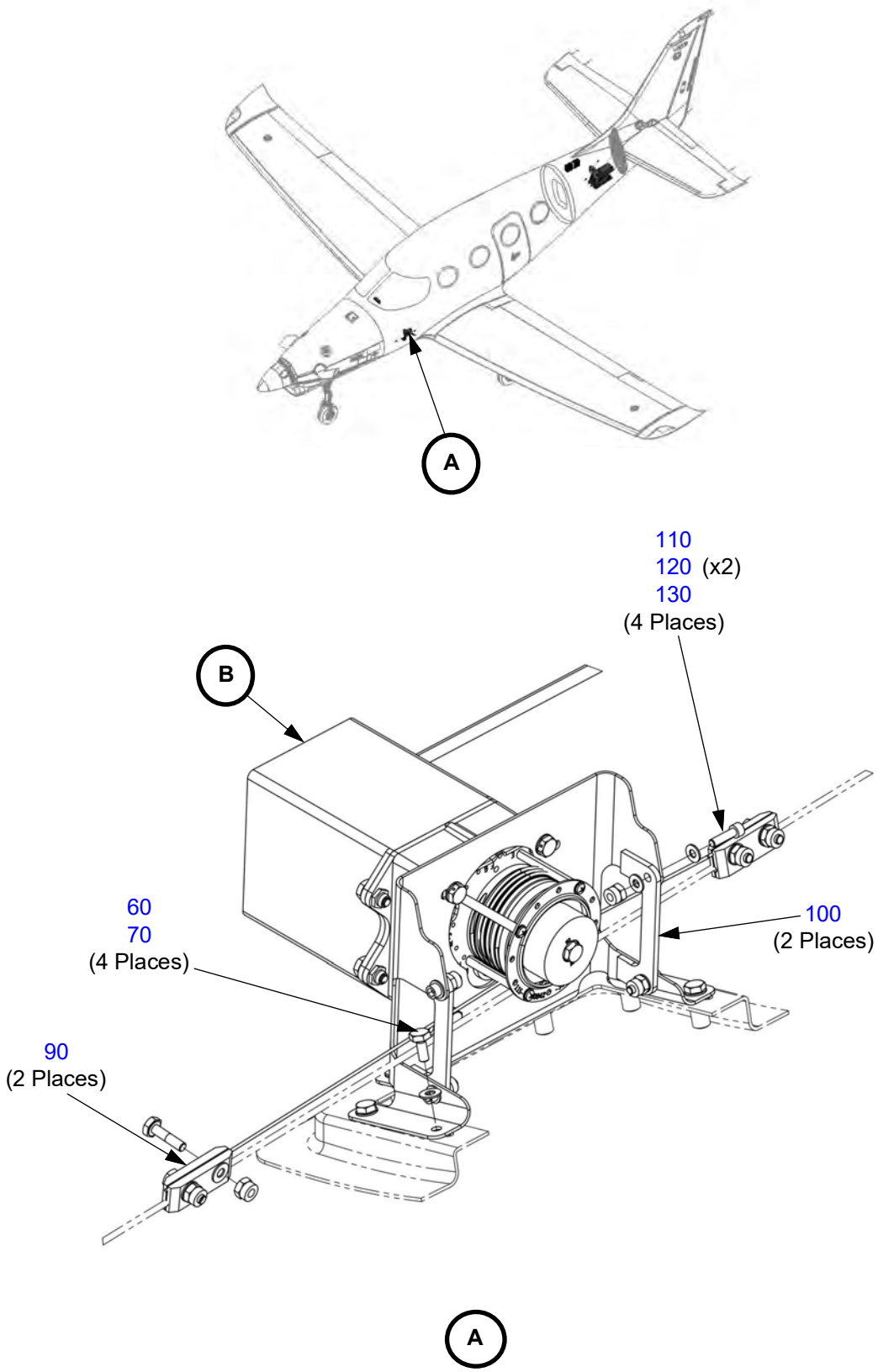

Figure 22-11.3: Roll Servo (Continued)

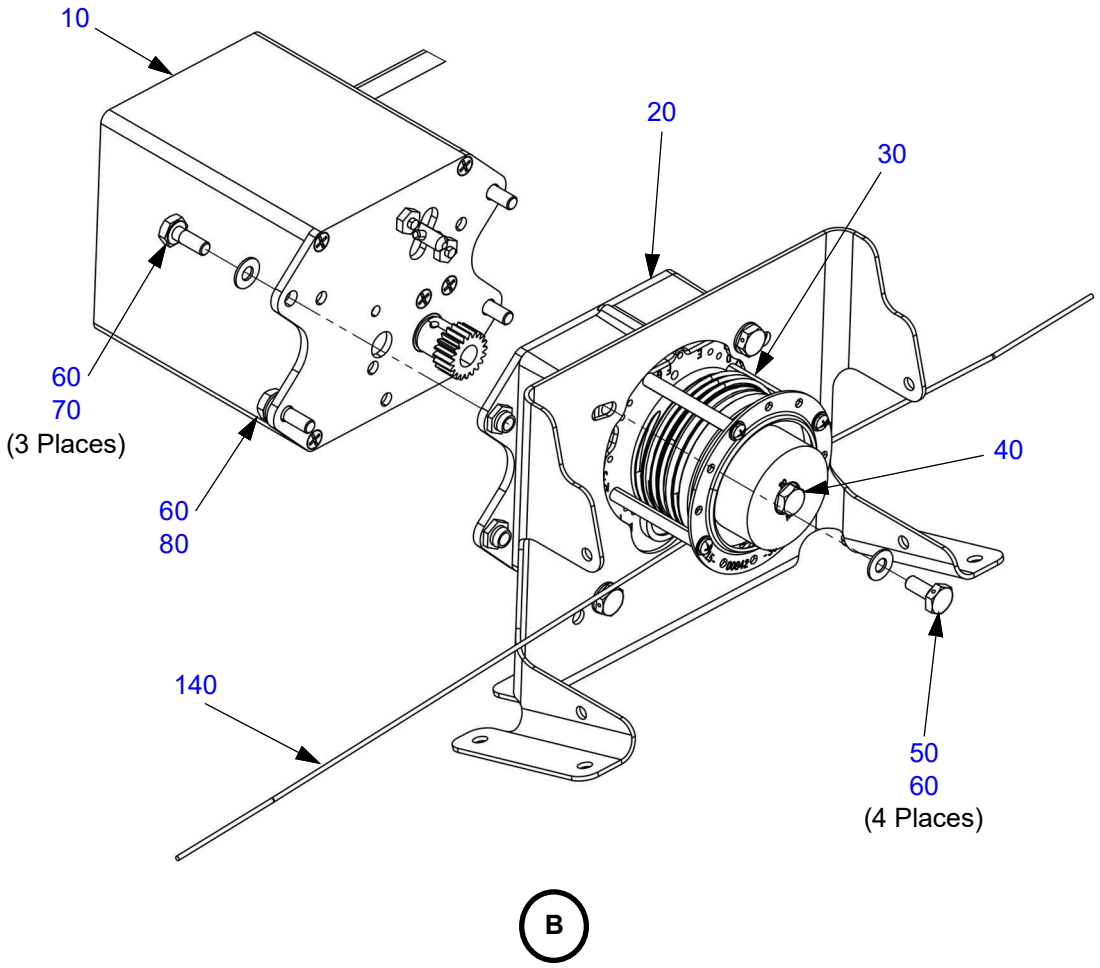

Table 22-11.3: Roll Servo

Figure Item Number	Part Number	Part Name	Effectivity Code	Amount in Assy.
10	011-00878-20	Servo, Garmin, GSA 81	K011 and On*	1
20	011-01904-00	GFC Servo Gearbox, GSM 86	K011 and On*	1
30	011-01908-00	GSM 86 Servo Mount, 1/16" Spiral Capstan	K011 and On*	1
40	011-02147-09	GSM 86 Clutch Kit, 45 In-lbs	K011 and On*	1
50	AN3H3A	Bolt, 10-32 x 15/32" Drilled Head	K011 and On*	4
60	NAS1149F0332P	Washer, Flat #10 x .032	K011 and On*	12
70	AN3-4A	Bolt, 10-32 x 17/32" Undrilled	K011 and On*	7
80	AN3-5A	Bolt, 10-32 x 21/32" Undrilled	K011 and On*	1
90	AK22100022	Cable Clamp Assembly, 1/16" Bridle	K011 and On*	2
100	PK22100006	Cable Fairlead, Autopilot	K011 and On*	2
110	NAS1352-08-10P	Screw, Socket Head .164-32 x .625	K011 and On*	4
120	MS21044N08	Nut, Self-locking, Steel .164-32	K011 and On*	8
130	NAS1149FN832P	Washer, Flat #8 x .032	K011 and On*	4
140	AK22100024	Bridle Cable, Autopilot Servo, Aileron, 1/16"	K011 and On*	1

* (Also SN:K003-K010 with SB-0017)

Figure 22-11.4: Yaw Servo

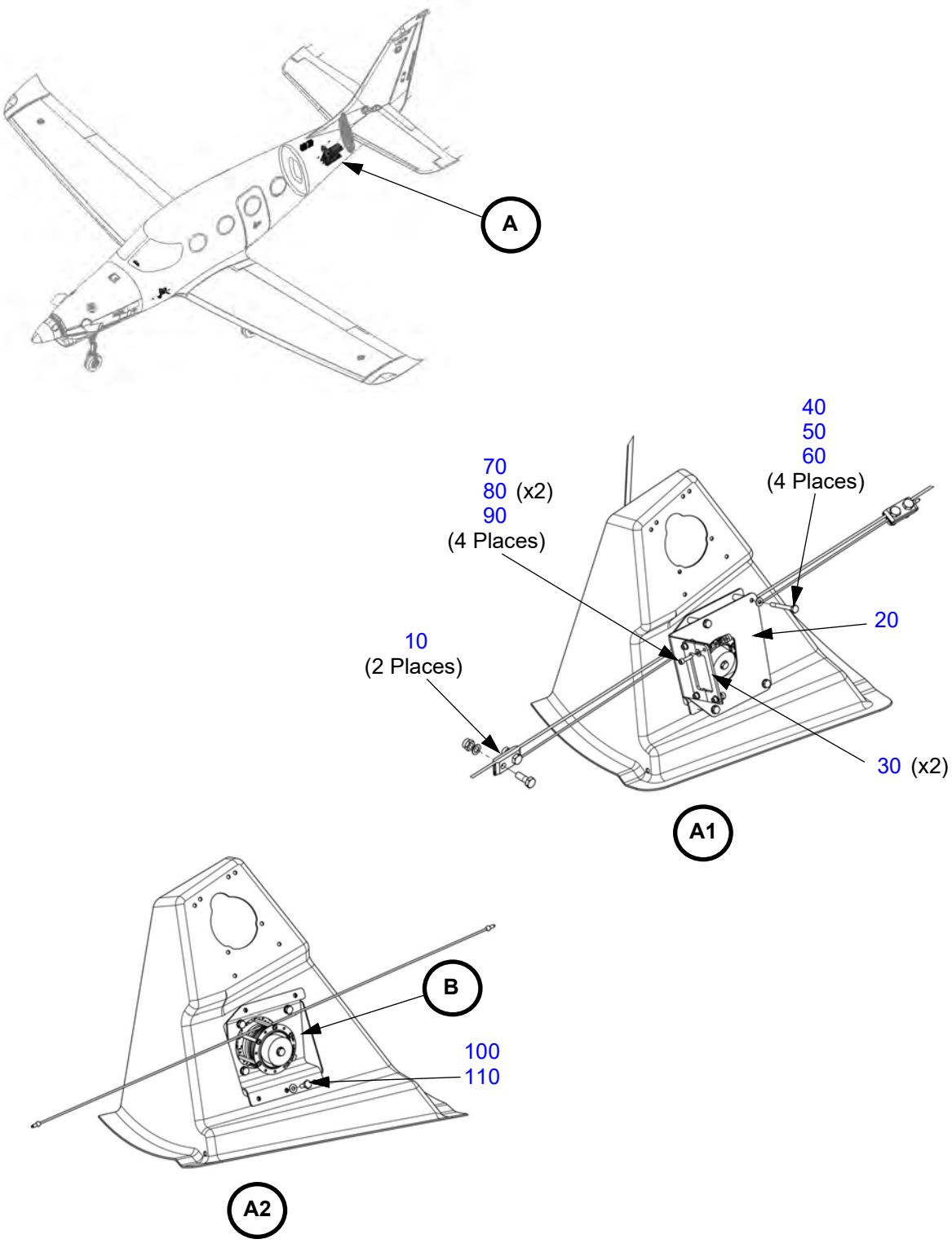

Figure 22-11.4: Yaw Servo (Continued)

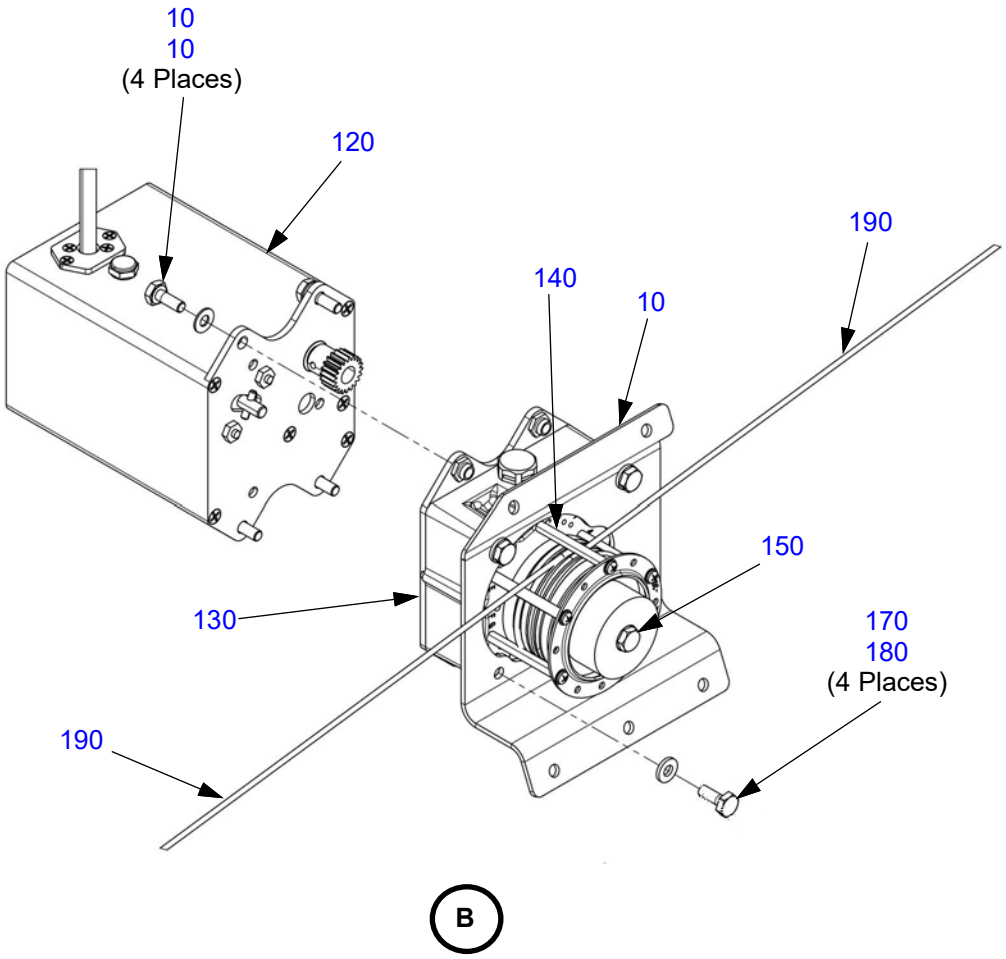

Table 22-11.4: Yaw Servo

Figure Item Number	Part Number	Part Name	Effectivity Code	Amount in Assy.
10	AK22100023	Cable Clamp Assembly, 3/32" Bridle	K011 and On*	2
20	PK22110019	Cable Guard, Yaw Servo, Garmin	K011 and On*	1
30	PK22100015	Cable Fairlead, Autopilot, Aft Servo	K011 and On*	2
40	AN3-16A	Bolt, 10-32 x 1-25/32" Undrilled	K011 and On*	4
50	NAS1149F0332P	Washer, Flat #10 x .032	K011 and On*	4
60	NAS43DD3-81N	Spacer, Aluminum .214 I.D. x .312 O.D. x 1.266	K011 and On*	4
70	NAS1352-08-10P	Screw, Socket Head .164-32 x .625	K011 and On*	4
80	NAS1149FN832P	Washer, Flat #8 x .032	K011 and On*	8
90	MS21044N08	Nut, Self-locking, Steel .164-32	K011 and On*	4
100	AN3-4A	Bolt, 10-32 x 17/32" Undrilled	K011 and On*	1
110	NAS1149F0332P	Washer, Flat #10 x .032	K011 and On*	1
120	011-00877-20	Servo, Garmin, GSA 80	K011 and On*	1
130	011-01904-00	GFC Servo Gearbox, GSM 86	K011 and On*	1
140	011-01908-01	GSM 86 Servo Mount, Dual Cables, 3/32" Spiral Capstan	K011 and On*	1
150	011-02147-13	GSM 86 Clutch Kit, 103 in-lbs	K011 and On*	1
160	PK22110018	Mounting Plate, Yaw Servo, Garmin	K011 and On*	1
170	AN3H4A	Bolt, 10-32 x 17/32" Drilled Head	K011 and On*	4
180	NAS1149F0363P	Washer, Flat #10 x .063	K011 and On*	4
190	AK22100021	Bridle Cable, Autopilot Servo, 3/32" Dia	K011 and On*	2

* (Also SN:K003-K010 with SB-0017)

Figure 22-11.5: Pitch Servo

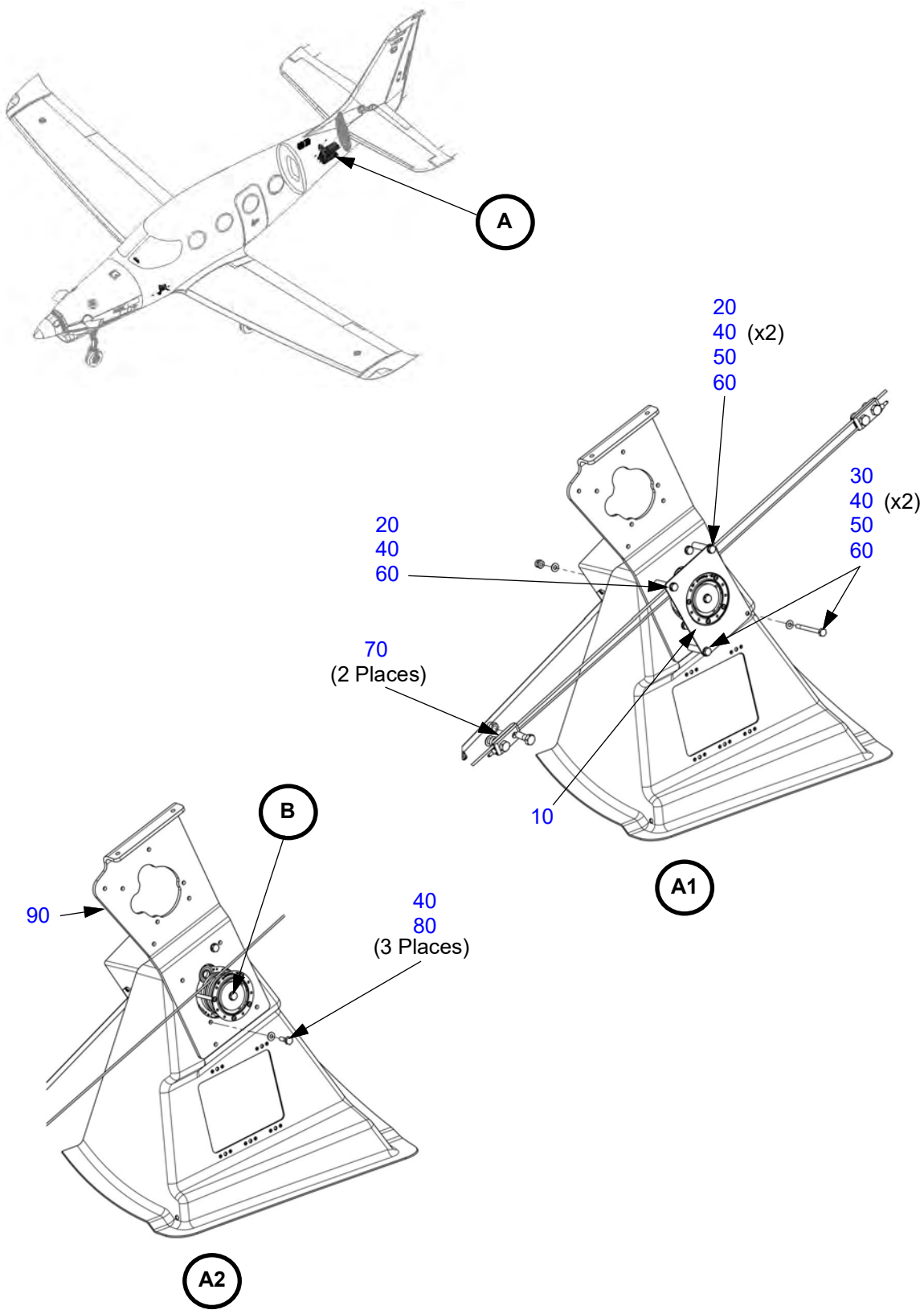

Figure 22-11.5: Pitch Servo (Continued)

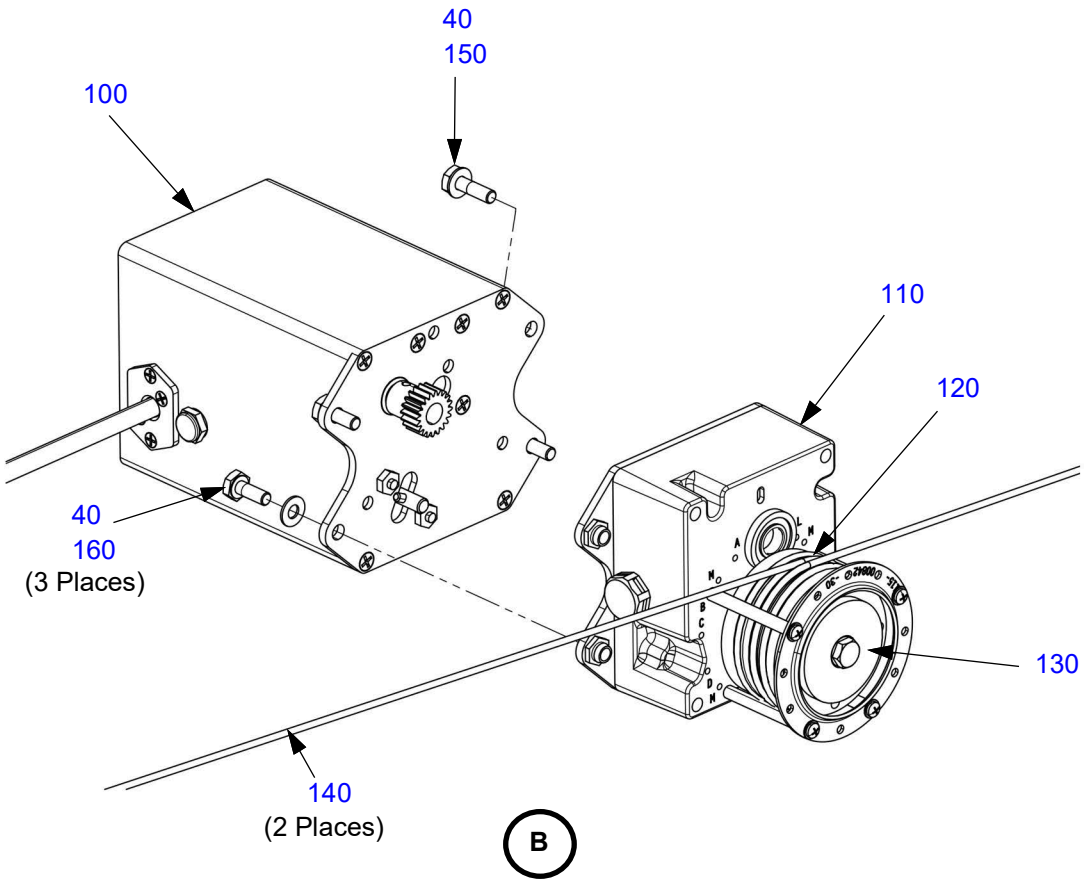

Table 22-11.5: Pitch Servo

Figure Item Number	Part Number	Part Name	Effectivity Code	Amount in Assy.
10	PK22110020	Cable Guard, Pitch Servo, Garmin	K011 and On*	1
20	AN3H21A	Bolt, 10-32 x 2-5/32" Drilled Head	K011 and On*	2
30	AN3-21A	Bolt, 10-32 x 2-5/32" Undrilled	K011 and On*	2
40	NAS1149F0332P	Washer, Flat #10 x .032	K011 and On*	13
50	MS21044N3	Nut, Self-locking, Steel 10-32	K011 and On*	3
60	NAS43DD3-88N	Spacer, Aluminum .214 I.D. x .312 O.D. x 1.375	K011 and On*	4
70	AK22100023	Cable Clamp Assembly, 3/32" Bridle	K011 and On*	2
80	AN3H5A	Bolt, 10-32 X 21/32" Drilled Head	K011 and On*	3
90	PK22110021	Pusher Servo Bracket, Garmin	K011 and On*	1
100	011-00877-20	Servo, Garmin, GSA 80	K011 and On*	1
110	011-01904-00	GFC Servo Gearbox, GSM 86	K011 and On*	1
120	011-01908-01	GSM 86 Servo Mount, Dual Cables, 3/32" Spiral Capstan	K011 and On*	1
130	011-02147-08	GSM 86 Clutch Kit, 39 In-lbs	K011 and On*	1
140	AK22100021	Bridle Cable, Autopilot Servo, 3/32" Dia	K011 and On*	2
150	AN3-5A	Bolt, 10-32 X 21/32" Undrilled	K011 and On*	1
160	AN3-4A	Bolt, 10-32 X 17/32" Undrilled	K011 and On*	3

* (Also SN:K003-K010 with SB-0017)

Figure 22-11.6: Auto-Level Switch

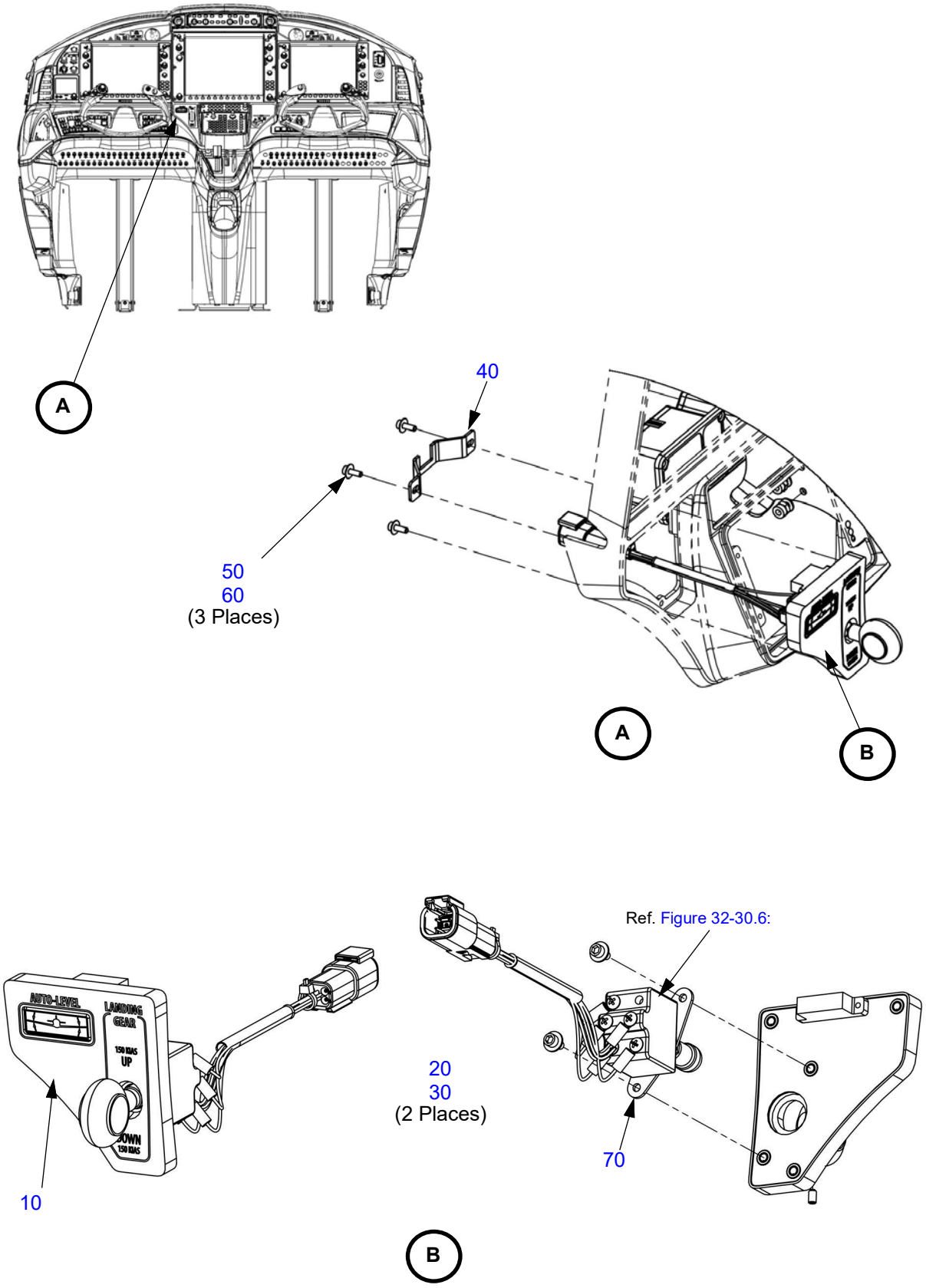

Table 22-11.6: Auto-Level Switch

Figure Item Number	Part Number	Part Name	Effectivity Code	Amount in Assy.
10	PK99008401	Light Plate, Landing Gear, Auto-level, GFC	K011 and On*	1
20	NAS1352-06-5P	Screw, Socket Head .138-32 x .313	K011 and On*	2
30	NAS1149FN632P	Washer, Flat #6 x .032	K011 and On*	2
40	PK39000023	Connector Retainer, Flaps And Gear Light Plate	K011 and On*	1
50	NAS1352-06-6P	Screw, Socket Head .138-32 x .375	K011 and On*	3
60	NAS1149FN616P	Washer, Flat #6 x .016	K011 and On*	3
70	PK39109512	Mount, Gear Switch, Lightplate, GFC	K011 and On*	1

* (Also SN:K003-K010 with SB-0017)

This Page Intentionally Left Blank

CHAPTER
23

Communications

This Page Intentionally Left Blank

Table of Contents
and
List of Effective Pages

Chapter/Section	Page Number	Effective Date
23-Title	Page 1	03 Apr 2020
23-Title	Page 2	03 Apr 2020
23-LOEP	Page 1	13 Jan 2023
23-LOEP	Page 2	03 Apr 2020
23-TOC	Page 1	13 Jan 2023
23-TOC	Page 2	03 Apr 2020
Speech Communications		
23-10	Page 1	03 Apr 2020
23-10	Page 2	03 Apr 2020
Passenger Address and Entertainment		
23-30	Page 1	13 Jan 2023
23-30	Page 2	13 Jan 2023
23-30	Page 3	13 Jan 2023
23-30	Page 4	13 Jan 2023
23-30	Page 5	13 Jan 2023
23-30	Page 6	13 Jan 2023
Audio Integrating		
23-50	Page 1	03 Apr 2020
23-50	Page 2	03 Apr 2020
23-50	Page 3	03 Apr 2020
23-50	Page 4	03 Apr 2020
23-50	Page 5	03 Apr 2020
23-50	Page 6	03 Apr 2020
Static Discharging		
23-60	Page 1	03 Apr 2020
23-60	Page 2	03 Apr 2020

This Page Intentionally Left Blank

CHAPTER 23

Table of Contents

List of Effective Pages ..... 23-LOEP / Page 1
Table of Contents ..... 23-TOC / Page1

Paragraph **Page Number**

Speech Communications

Figure 23-10.1: COM and Transponder Antennas ..... 23-10 / Page 1
Table 23-10.1: COM and Transponder Antennas ..... 23-10 / Page 2

Passenger Address and Entertainment

Figure 23-30.1: Satellite Weather/Music Data Link 23-30 / Page 1
Table 23-30.1: Satellite Weather/Music Data Link 23-30 / Page 2
Figure 23-30.2: GSR 56 Satellite Transceiver ..... 23-30 / Page 3
Table 23-30.2: GSR 56 Satellite Transceiver 23-30 / Page 5

Audio Integration

Figure 23-50.1: Audio Panel ..... 23-50 / Page 1
Table 23-50.1: Audio Panel ..... 23-50 / Page 2
Figure 23-50.2: Auxiliary Push-to-Talk (PTT) ..... 23-50 / Page 3
Table 23-50.2: Auxiliary Push-to-Talk (PTT) ..... 23-50 / Page 4
Figure 23-50.3: Headset Jacks ..... 23-50 / Page 5
Table 23-50.3: Headset Jacks ..... 23-50 / Page 6

Static Discharging

Figure 23-60.1: Static Wicks ..... 23-60 / Page 1
Table 23-60.1: Static Wicks ..... 23-60 / Page 2

This Page Intentionally Left Blank

SPEECH COMMUNICATIONS

Figure 23-10.1: COM and Transponder Antennas

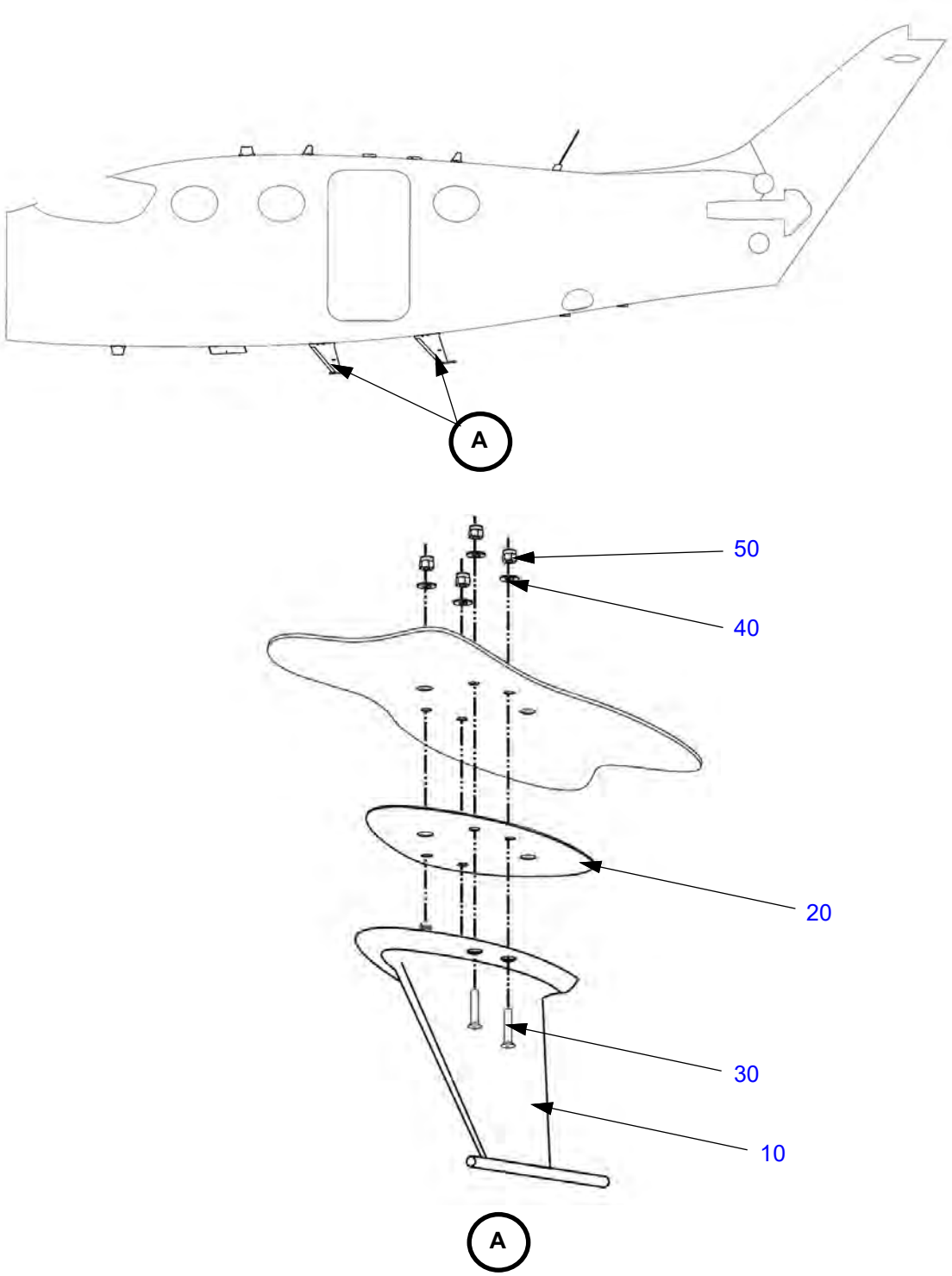

Table 23-10.1: COM and Transponder Antennas

Figure Item Number	Part Number	Part Name	Effectivity Code	Amount in Assy.
10	CI 1085-20-L	Antenna, VHF/L-band, Com 1 And Com 2	K003 and On	2
20	AG844000-31	Gasket - VHF Antenna	K003 and On	2
30	MS27039-1-15	Screw, Pan Head, .190 x .969 Lg.	K003 and On	8
40	NAS1149F0316P	Washer, Flat #10 x .016	K003 and On	8
50	MS21083N3	Nut, Self-locking, Non-metallic Insert 10-32	K003 and On	8

PASSENGER ADDRESS AND ENTERTAINMENT

Figure 23-30.1: Satellite Weather/Music Data Link

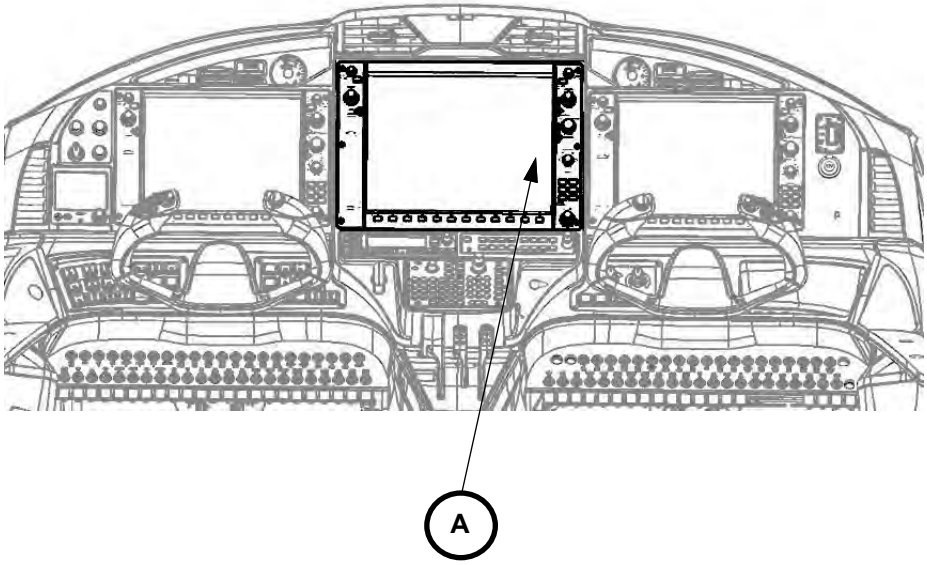

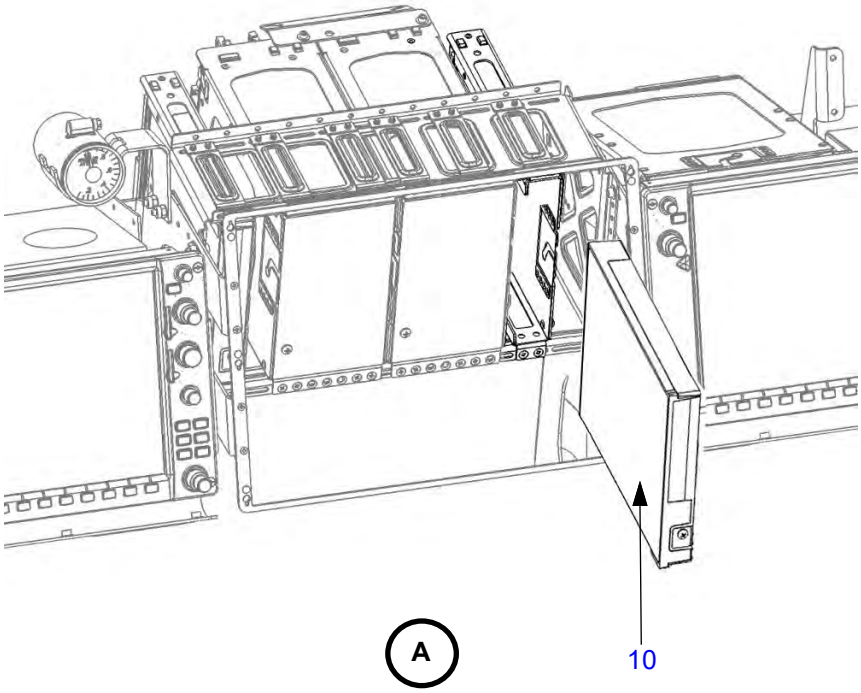

Table 23-30.1: Satellite Weather/Music Data Link

Figure Item Number	Part Number	Part Name	Effectivity Code	Amount in Assy.
10	011-03177-10	GDL 69A XM Satellite Radio Receiver	K003 and On	1

Note: Refer to Chapter 34-40 for antenna installation.

Figure 23-30.2: GSR 56 Satellite Transceiver

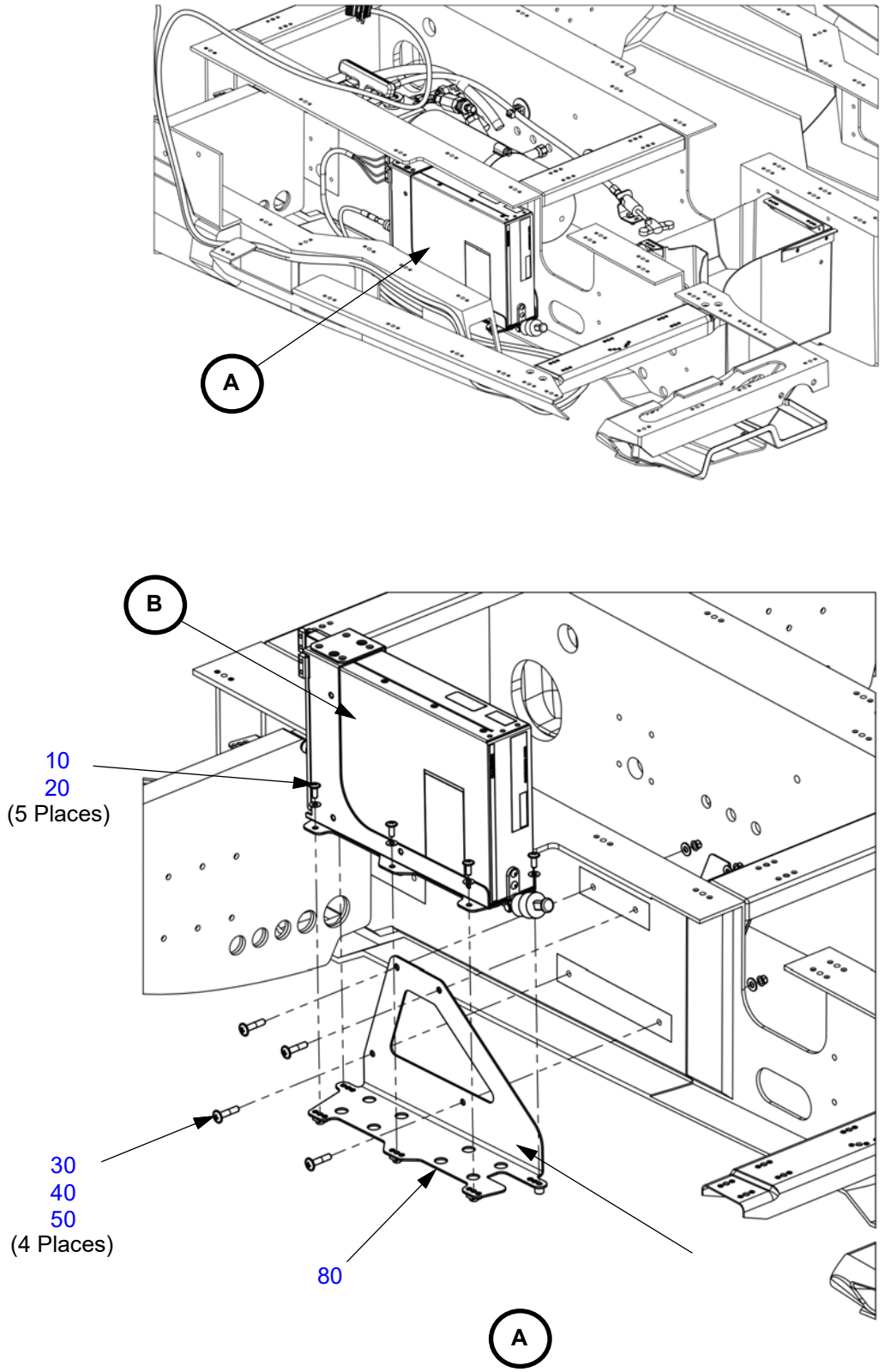

Figure 23-30.2: GSR 56 Satellite Transceiver (Continued)

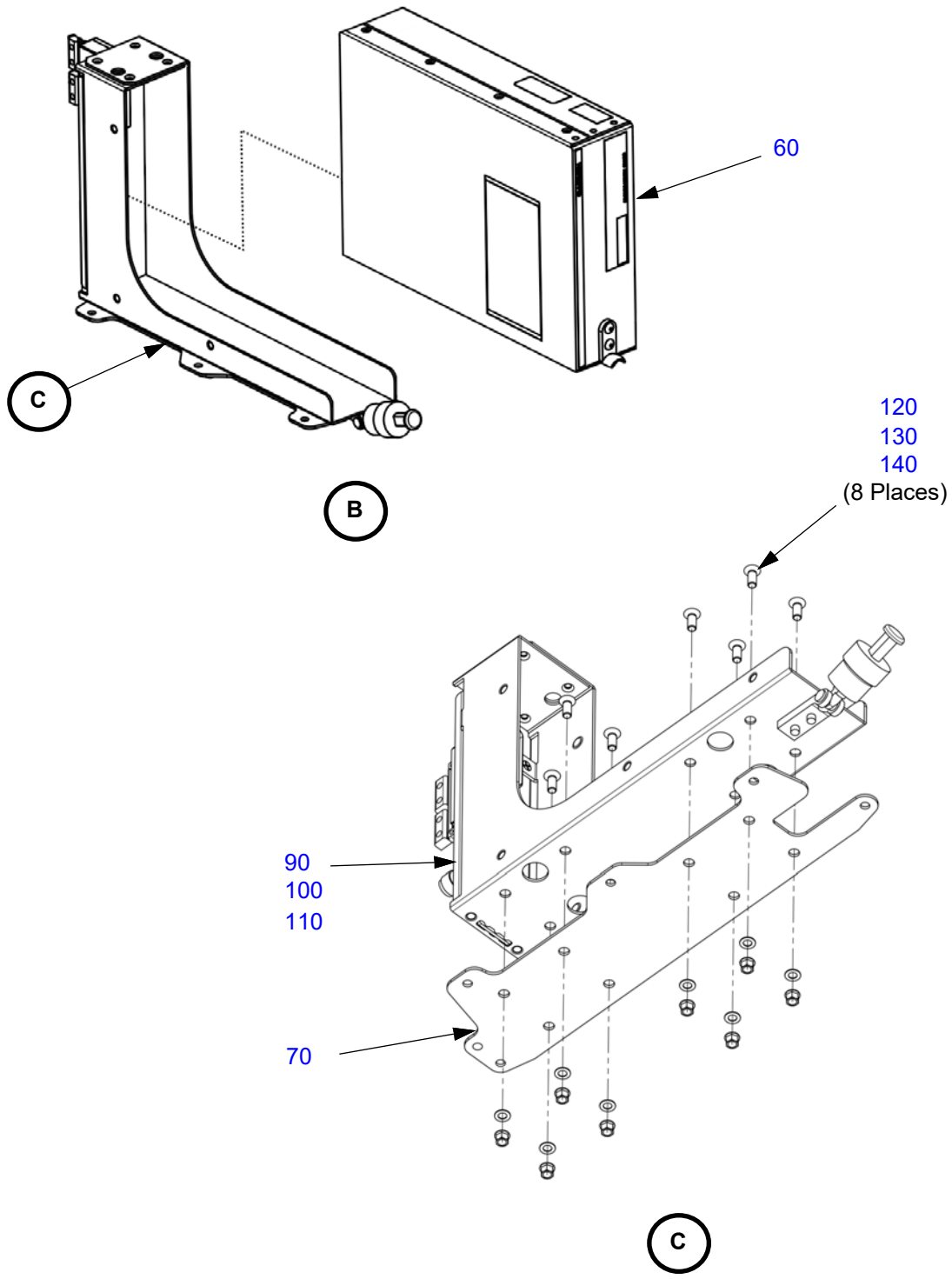

Table 23-30.2: GSR 56 Satellite Transceiver

Figure Item Number	Part Number	Part Name	Effectivity Code	Amount in Assy.
10	AN525-832R7	Screw, Washer Head, .164 x .438 LG.	Optional*	5
20	NAS1149FN816P	Washer, Flat #8 x .016	Optional*	5
30	NAS1149F0332P	Washer, Flat #10 x .032	Optional*	4
04	AN525-10R14	Screw, Washer Head, .190 x .875 LG.	Optional*	4
50	MS21042L3	Nut, Self-locking, 450°, Reduced #10-32	Optional*	4
60	011-02268-01	GSR 56, Enhanced	Optional*	1
70	PK23602001	Mounting Plate, Radio Rack, Garmin GSR 56	Optional*	1
80	AK23601001	Mounting Bracket Assy, Radio Rack, Garmin GSR 56	Optional*	1
90	011-01732-01	Sub-Assy, Connector Kit, GSR 56, Enhanced	Optional*	1
100	011-01800-00	Sub-Assy, Back Plate, GSR 56	Optional*	1
110	115-01018-00	SMP, Remote Rack, GSR 56	Optional*	1
120	MS21042L08	Nut, Self-locking, 450°, Reduced #8-32	Optional*	8
130	NAS620C8	Washer, Reduced O.D., CRES, .169 I.D x .304 O.D.	Optional*	8
140	MS24694-S3	Screw, Machine, C'SUNK Ø .164 x 13/32	Optional*	8

*K003 - K010 with SB-0017 and SB-0019, K011 and on with SB-0019.

Note: Refer to Chapter 34-40 for antenna installation.

This Page Intentionally Left Blank

AUDIO INTEGRATING

Figure 23-50.1: Audio Panel

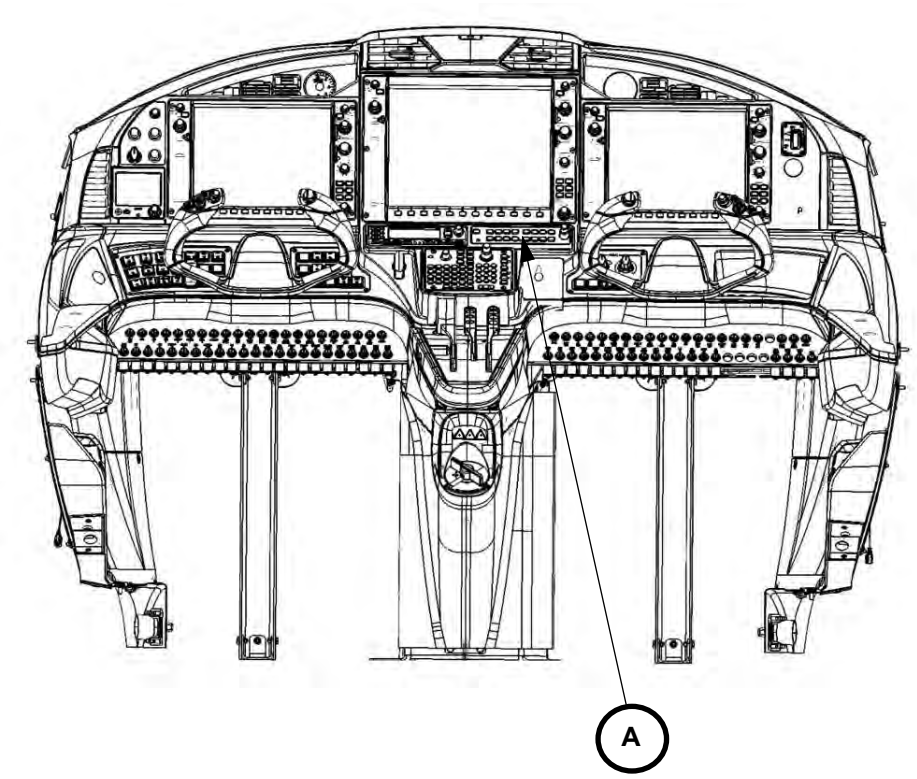

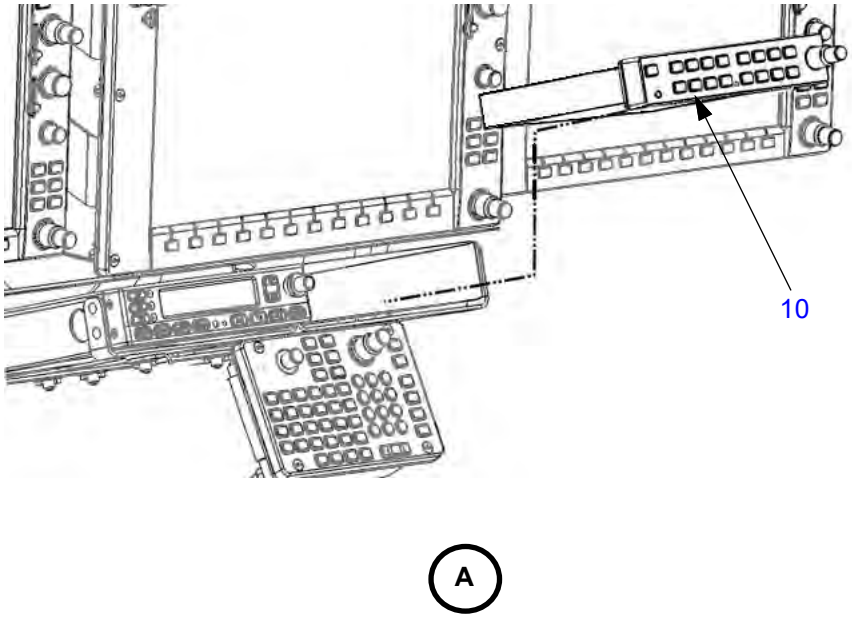

Table 23-50.1: Audio Panel

Figure Item Number	Part Number	Part Name	Effectivity Code	Amount in Assy.
10	011-02385-40	GMA 350c Audio Control Panel	K003 and On	1

Figure 23-50.2: Auxiliary Push-to-Talk (PTT)

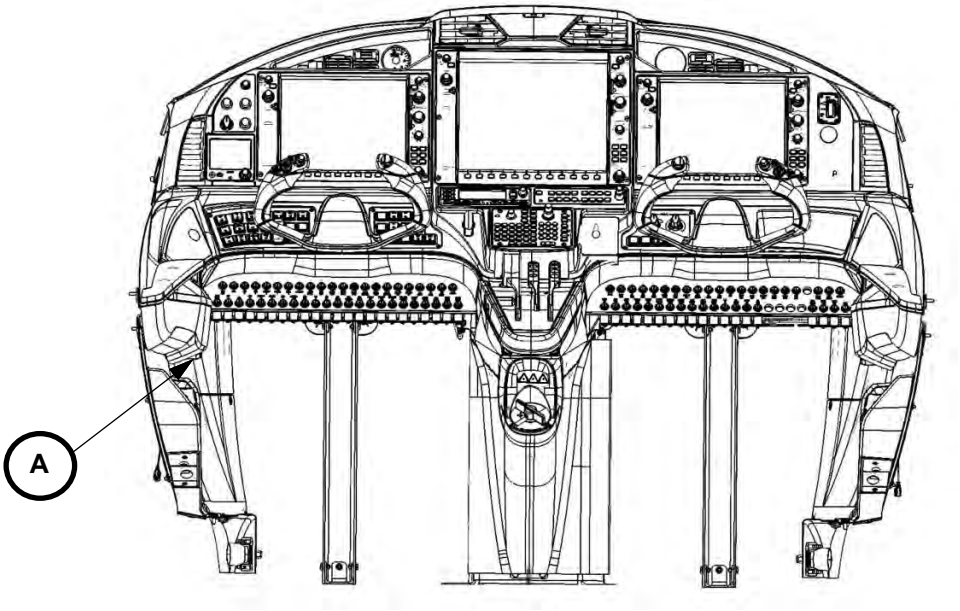

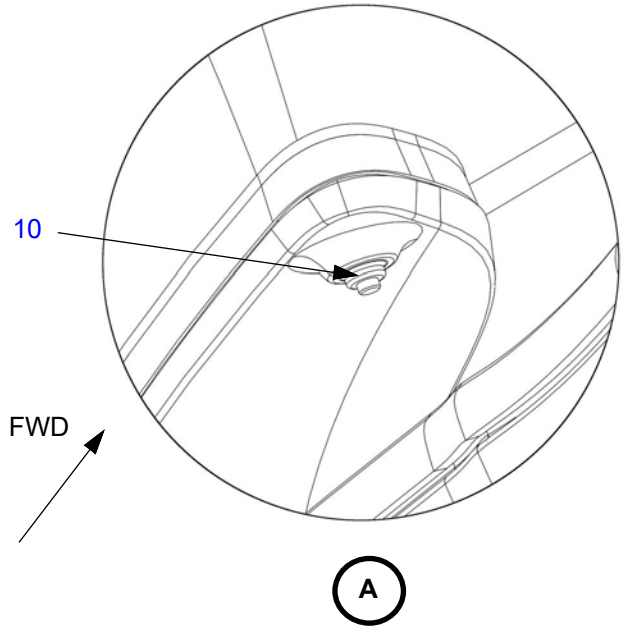

For yoke mounted PTT switches Ref. Figure 27-30.5:

Table 23-50.2: Auxiliary Push-to-Talk (PTT)

Figure Item Number	Part Number	Part Name	Effectivity Code	Amount in Assy.
10	P7-1A1122	Switch, Push Button, 'no', 'nc'	K003 and On	1

Figure 23-50.3: Headset Jacks

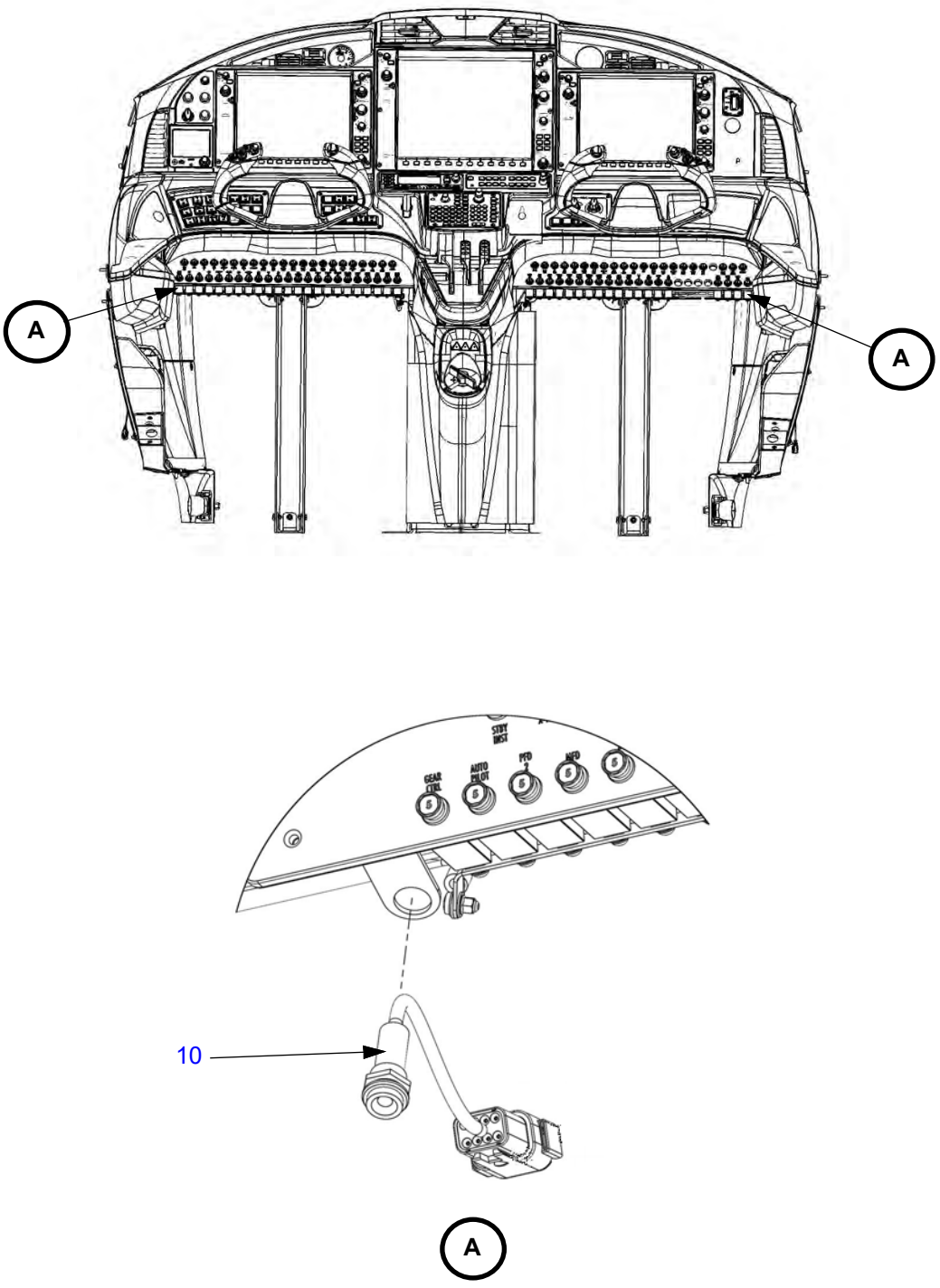

Left side shown, right side opposite.

Table 23-50.3: Headset Jacks

Figure Item Number	Part Number	Part Name	Effectivity Code	Amount in Assy.
10	AK23501001	Bose Headset Connector Assy, Pilot, Co Pilot	K003 and On	2

STATIC DISCHARGING

Figure 23-60.1: Static Wicks

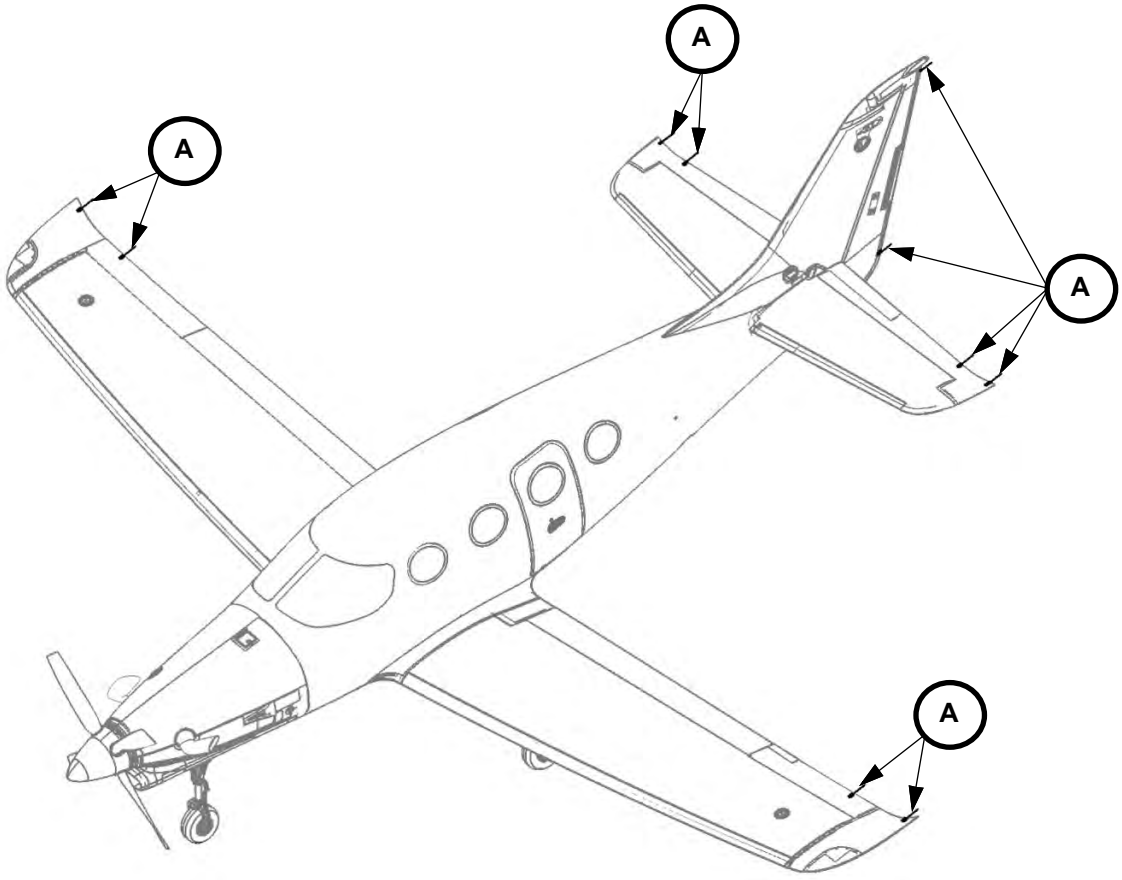

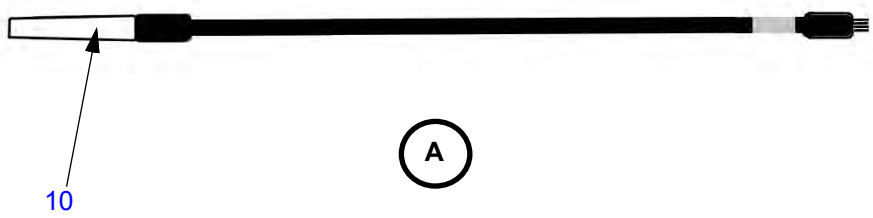

Table 23-60.1: Static Wicks

Figure Item Number	Part Number	Part Name	Effectivity Code	Amount in Assy.
10	17770	Static Wick	K003 and On	10
*20	540095	Static Wick base	K003 and On	10

*Item not illustrated.

CHAPTER
24

Electrical Power

This Page Intentionally Left Blank

Table of Contents
and
List of Effective Pages

Chapter/Section	Page Number	Effective Date
24-Title	Page 1	03 Apr 2020
24-Title	Page 2	03 Apr 2020
24-LOEP	Page 1	26 Mar 2024
24-LOEP	Page 2	26 Mar 2024
24-TOC	Page 1	03 Apr 2020
24-TOC	Page 2	03 Apr 2020
DC Generation		
24-30	Page 1	03 Apr 2020
24-30	Page 2	03 Apr 2020
24-30	Page 3	03 Apr 2020
24-30	Page 4	26 Mar 2024
24-30	Page 5	26 Mar 2024
24-30	Page 6	26 Mar 2024
24-30	Page 7	26 Mar 2024
24-30	Page 8	26 Mar 2024
24-30	Page 9	26 Mar 2024
24-30	Page 10	26 Mar 2024
24-30	Page 11	26 Mar 2024
24-30	Page 12	26 Mar 2024
24-30	Page 13	26 Mar 2024
24-30	Page 14	26 Mar 2024
24-30	Page 15	26 Mar 2024
24-30	Page 16	26 Mar 2024
24-30	Page 17	26 Mar 2024
24-30	Page 18	26 Mar 2024
24-30	Page 19	26 Mar 2024
24-30	Page 20	26 Mar 2024
24-30	Page 21	26 Mar 2024
24-30	Page 22	26 Mar 2024
24-30	Page 23	26 Mar 2024
24-30	Page 24	26 Mar 2024
24-30	Page 25	26 Mar 2024
24-30	Page 26	26 Mar 2024

External Power

24-40 ..... Page 1 ..... 03 Apr 2020
24-40 ..... Page 2 ..... 03 Apr 2020

DC Electric Load Distribution

24-60 ..... Page 1 ..... 26 Mar 2024
24-60 ..... Page 2 ..... 26 Mar 2024
24-60 ..... Page 3 ..... 26 Mar 2024
24-60 ..... Page 4 ..... 26 Mar 2024
24-60 ..... Page 5 ..... 26 Mar 2024
24-60 ..... Page 6 ..... 26 Mar 2024
24-60 ..... Page 7 ..... 26 Mar 2024
24-60 ..... Page 8 ..... 26 Mar 2024
24-60 ..... Page 9 ..... 26 Mar 2024
24-60 ..... Page 10 ..... 26 Mar 2024
24-60 ..... Page 11 ..... 26 Mar 2024
24-60 ..... Page 12 ..... 26 Mar 2024
24-60 ..... Page 13 ..... 14 Jul 2021
24-60 ..... Page 14 ..... 14 Jul 2021
24-60 ..... Page 15 ..... 14 Jul 2021
24-60 ..... Page 16 ..... 14 Jul 2021
24-60 ..... Page 17 ..... 13 Jan 2023
24-60 ..... Page 18 ..... 14 Jul 2021
24-60 ..... Page 19 ..... 13 Jan 2023
24-60 ..... Page 20 ..... 14 Jul 2021

CHAPTER 24

Table of Contents

List of Effective Pages ..... 24-LOEP / Page 1
Table of Contents ..... 24-TOC / Page1

Paragraph **Page Number**

DC Generation

Figure 24-30.1: Batteries ..... 24-30 / Page 1
Table 24-30.1: Batteries ..... 24-30 / Page 3
Figure 24-30.2: Master Control Unit (MCU) ..... 24-30 / Page 4
Table 24-30.2: Master Control Unit (MCU) ..... 24-30 / Page 14
Figure 24-30.3: Starter Generator and Alternator ..... 24-30 / Page 18
Table 24-30.3: Starter Generator and Alternator ..... 24-30 / Page 19
Figure 24-30.4: Generator Control Unit (GCU) ..... 24-30 / Page 20
Table 24-30.4: Generator Control Unit (GCU) ..... 24-30 / Page 21
Figure 24-30.5: Alternator Control Unit (ACU) ..... 24-30 / Page 22
Table 24-30.5: Alternator Control Unit (ACU) ..... 24-30 / Page 23
Figure 24-30.6: Ground Fault Transformer ..... 24-30 / Page 24
Table 24-30.6: Ground Fault Transformer ..... 24-30 / Page 25

External Power

Figure 24-40.1: Ground Power Socket ..... 24-40 / Page 1
Table 24-40.1: Ground Power Socket ..... 24-40 / Page 2

DC Electric Load Distribution

Figure 24-60.1: Circuit Breaker Panel, Left (SN: K003 and On) ..... 24-60 / Page 1
Table 24-60.1: Circuit Breaker Panel, Left (SN: K003 and On) ..... 24-60 / Page 2
Figure 24-60.2: Circuit Breaker Panel, Right (SN: K003-K010) ..... 24-60 / Page 3
Table 24-60.2: Circuit Breaker Panel, Right (SN: K003-K010) ..... 24-60 / Page 4
Table 24-60.3: Circuit Breaker Panel, Right (SN: K011 and On) ..... 24-60 / Page 6
Table 24-60.3: Circuit Breaker Panel, Right (SN: K011 and On) ..... 24-60 / Page 6
Figure 24-60.4: Switch Panel, LH ..... 24-60 / Page 7
Table 24-60.4: Switch Panel, LH ..... 24-60 / Page 8
Figure 24-60.5: Switch Panel, RH ..... 24-60 / Page 9
Table 24-60.5: Switch Panel, RH ..... 24-60 / Page 10
Figure 24-60.6: Test Switch Panel ..... 24-60 / Page 11
Table 24-60.6: Test Switch Panel ..... 24-60 / Page 12

Figure 24-60.7: USB Ports ..... 24-60 / Page 13
Table 24-60.7: USB Ports ..... 24-60 / Page 16
Figure 24-60.8: Power Outlets ..... 24-60 / Page 17
Table 24-60.8: Power Outlets ..... 24-60 / Page 19

DC GENERATION

Figure 24-30.1: Batteries

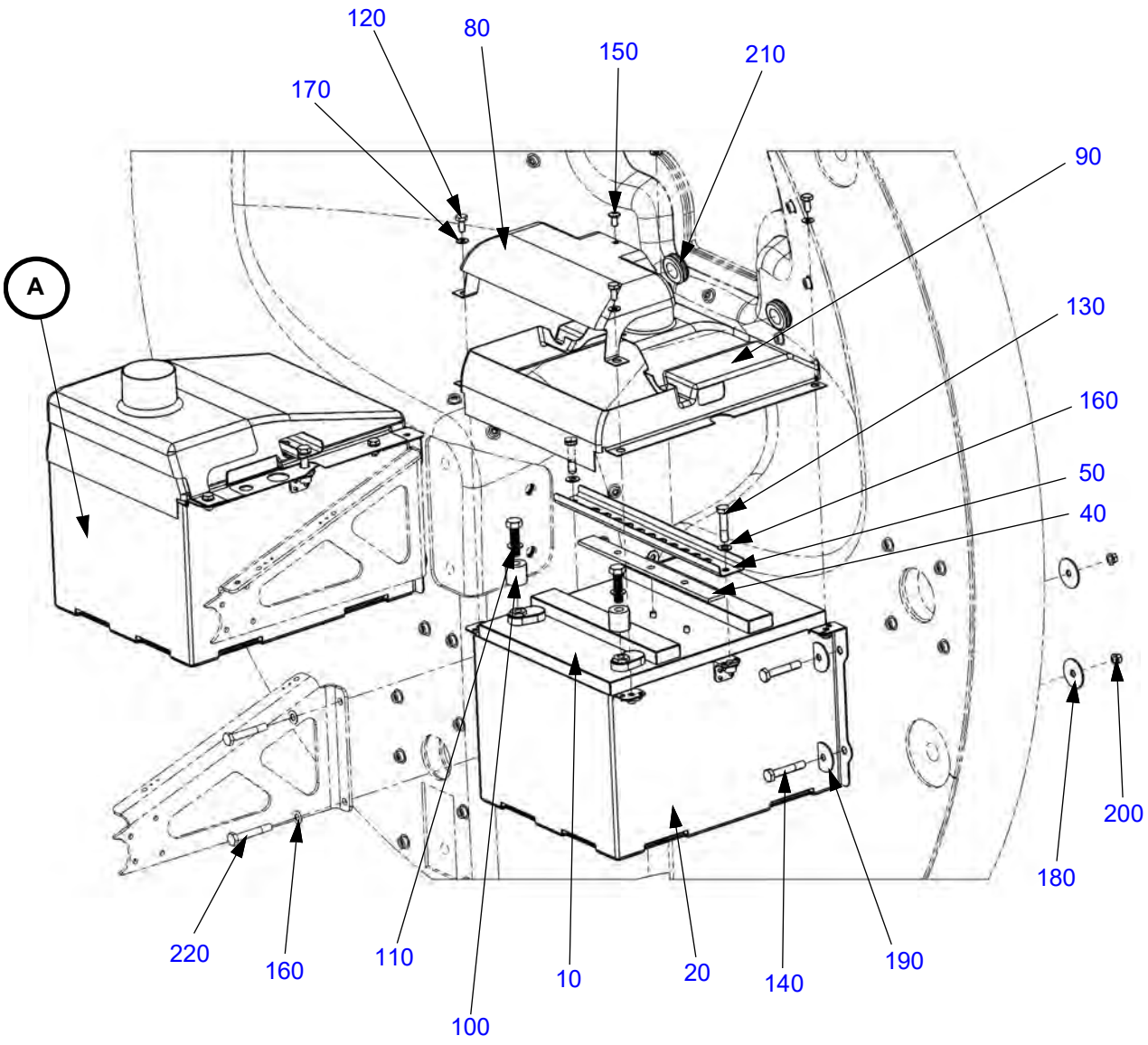

Figure 24-30.1: Batteries (Continued)

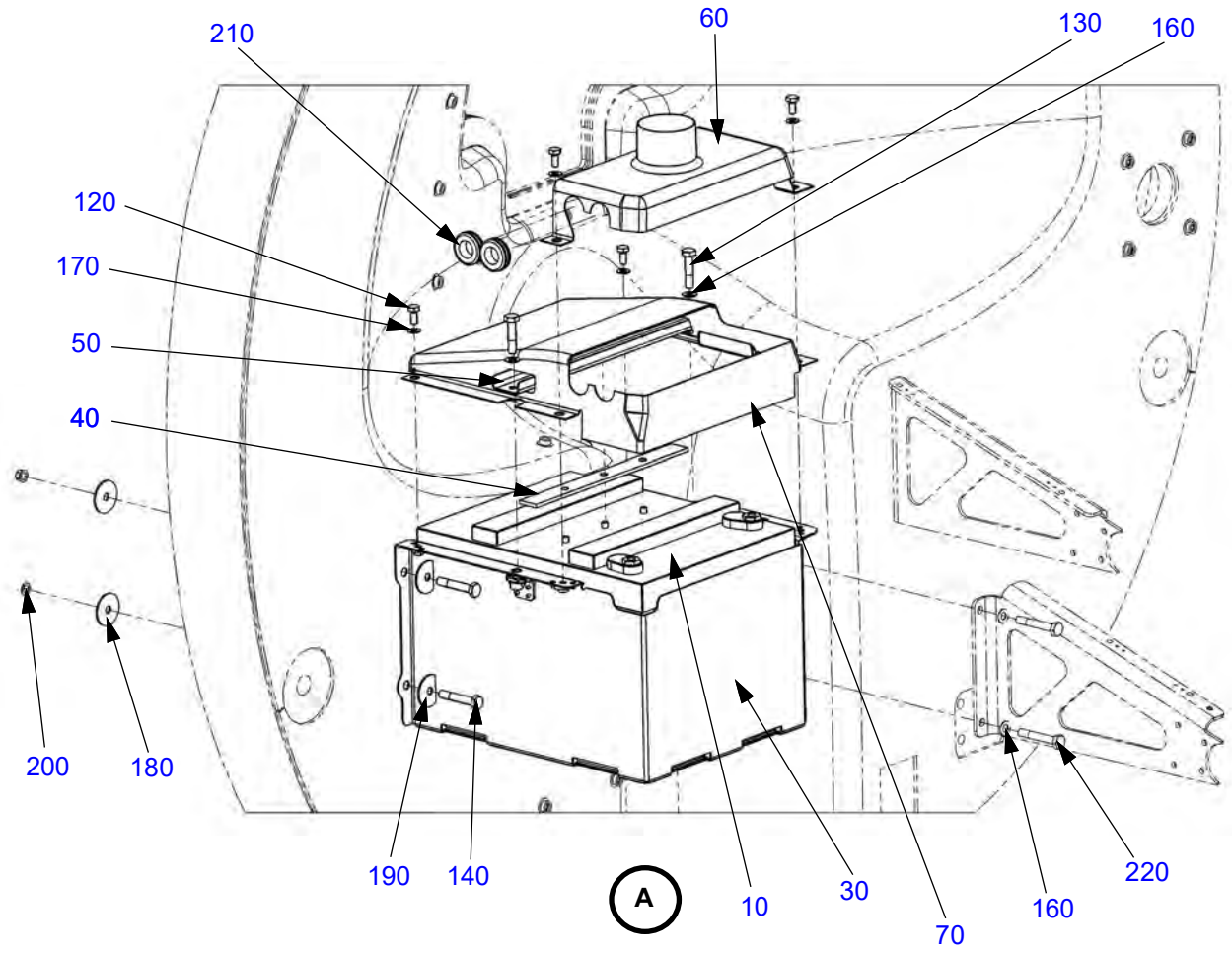

Table 24-30.1: Batteries

Figure Item Number	Part Number	Part Name	Effectivity Code	Amount in Assy.
10	RG-325	Concorde: Battery, 24 Volt	K003 and On	2
20	AK71400504	Box Weldment, Enclosed Battery Box, Left	K003 and On	1
30	AK71400502	Box Weldment, Enclosed Battery Box, Right	K003 and On	1
40	PK71400034	Chafe Guard, Battery Hold Down	K003 and On	2
50	PK71400033	Retainer, Battery Box	K003 and On	2
60	PK71400501	Inlet Lid, Enclosed Battery Box, Right	K003 and On	1
70	PK71400502	Top, Enclosed Battery Box, Right	K003 and On	1
80	PK71400505	Lid, Enclosed Battery Box, Left	K003 and On	1
90	PK71400507	Assembly, Top, Enclosed Battery Box, Left	K003 and On	1
100	PK71400035	Spacer, Terminal, Battery	K003 and On	2
110	M8X1.25X35	Bolt, Hex, M8 X 1.25MM Pitch x 35MM LG	K003 and On	2
120	AN3-3A	Bolt, 10-32 x 15/32" Undrilled	K003 and On	8
130	AN4-11A	Bolt, 1/4-28 x 1-5/32" Undrilled	K003 and On	4
140	AN4-14A	Bolt, 1/4-28 x 1-17/32" Undrilled	K003 and On	4
150	AN525-10R7	Screw, Washer Head, .190 x .438 Lg.	K003 and On	1
160	NAS1149F0432P	Washer, Flat 1/4 x 0.032	K003 and On	8
170	NAS1149C0332R	Washer, Flat, CRES #10 x .032	K003 and On	8
180	AN970-4	Washer, Flat 1/4 x 0.063	K003 and On	4
190	PK24300005	Battery Box, Stiffener Washer	K003 and On	4
200	MS21042L4	Nut, Self-locking, 450°, Reduced 1/4-28	K003 and On	4
210	MS35489-151X	Grommet, .625 ID x 1.125 OD x .094 Groove	K003 and On	4
220	AN4-16A	Bolt, 1/4-28 x 1-25/32" Undrilled	K003 and On	4

Figure 24-30.2: Master Control Unit (MCU)

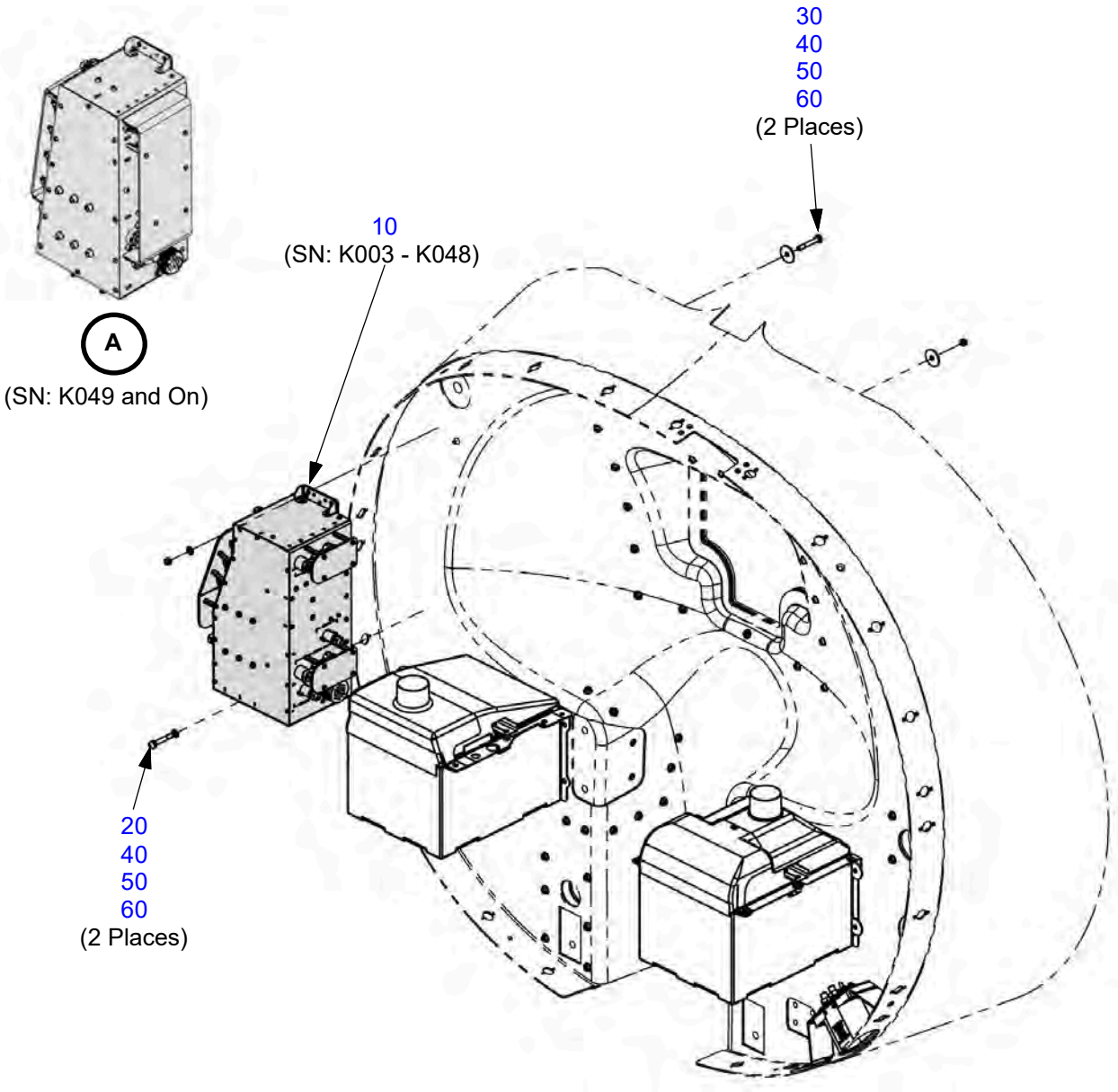

Figure 24-30.2: Master Control Unit (MCU) (Continued)

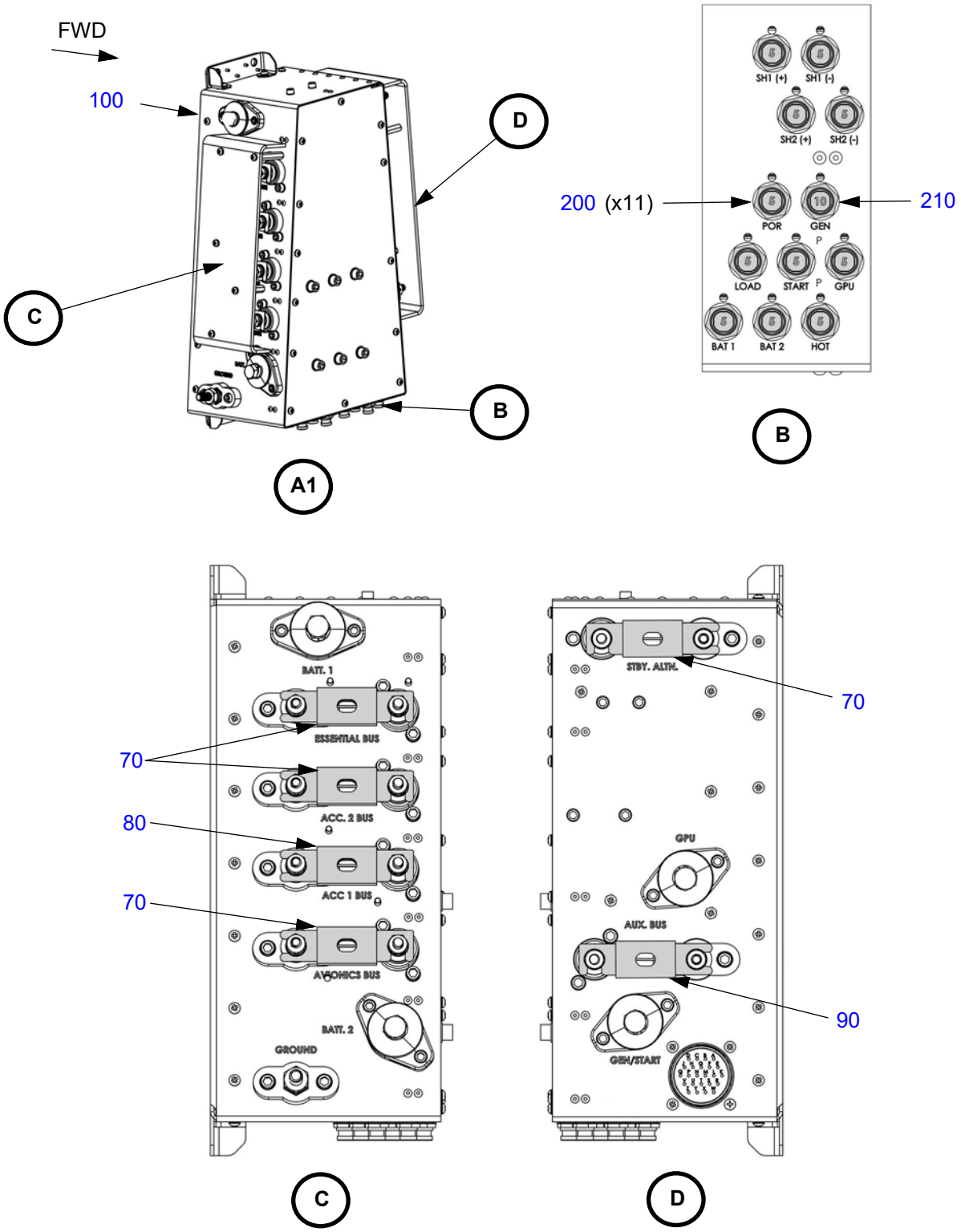

Figure 24-30.2: Master Control Unit (MCU) (Continued)

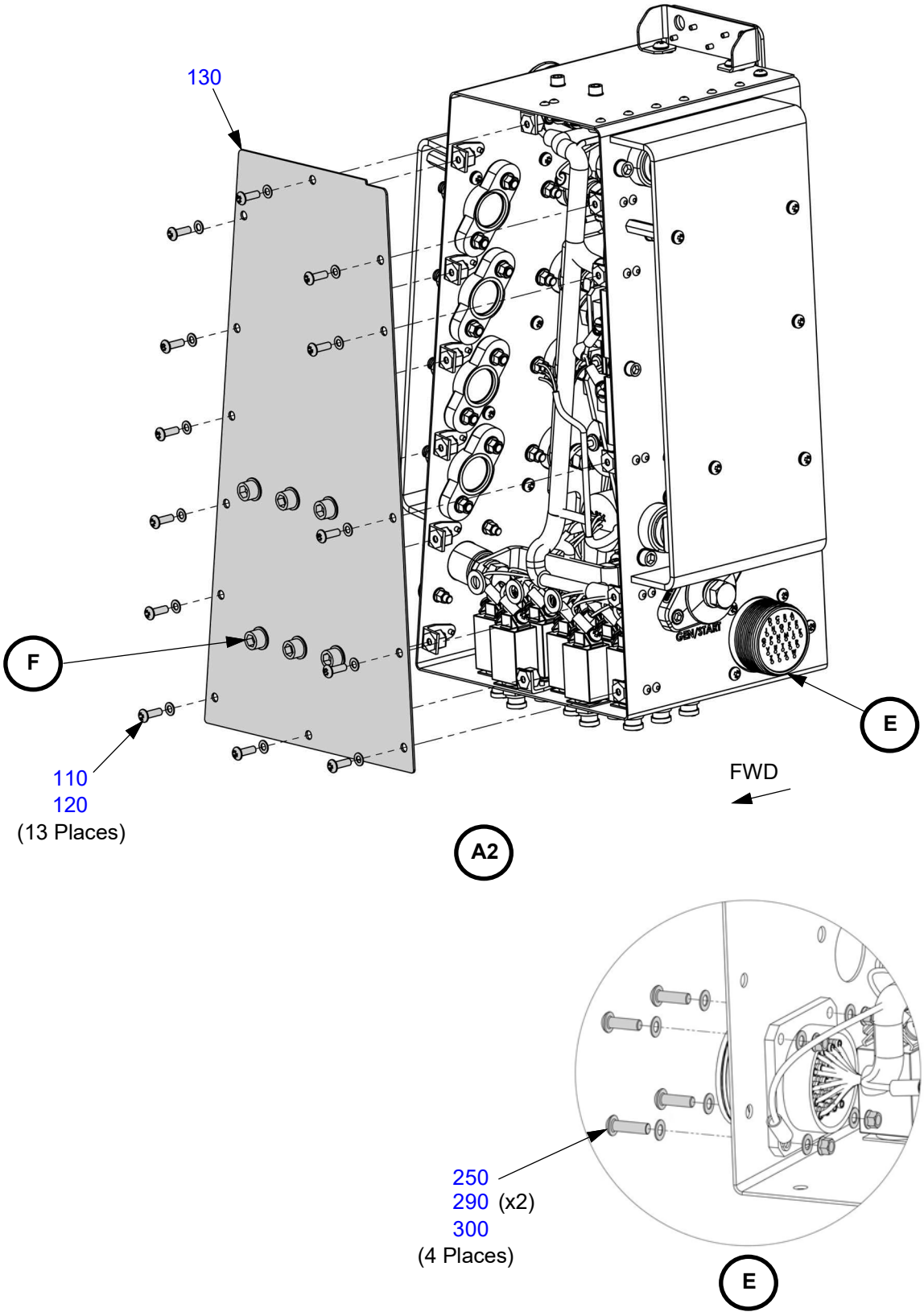

Figure 24-30.2: Master Control Unit (MCU) (Continued)

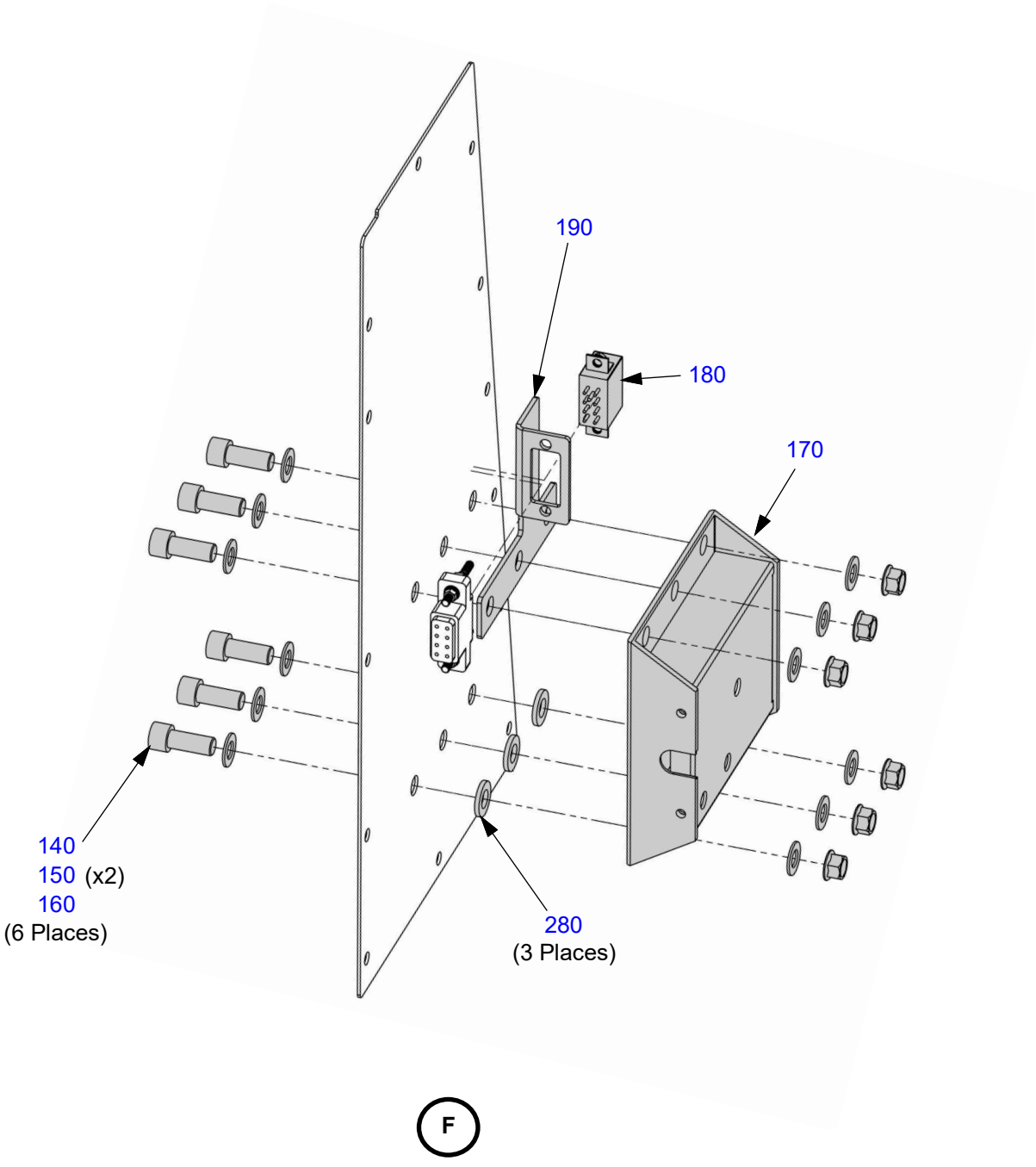

Figure 24-30.2: Master Control Unit (MCU) (Continued)

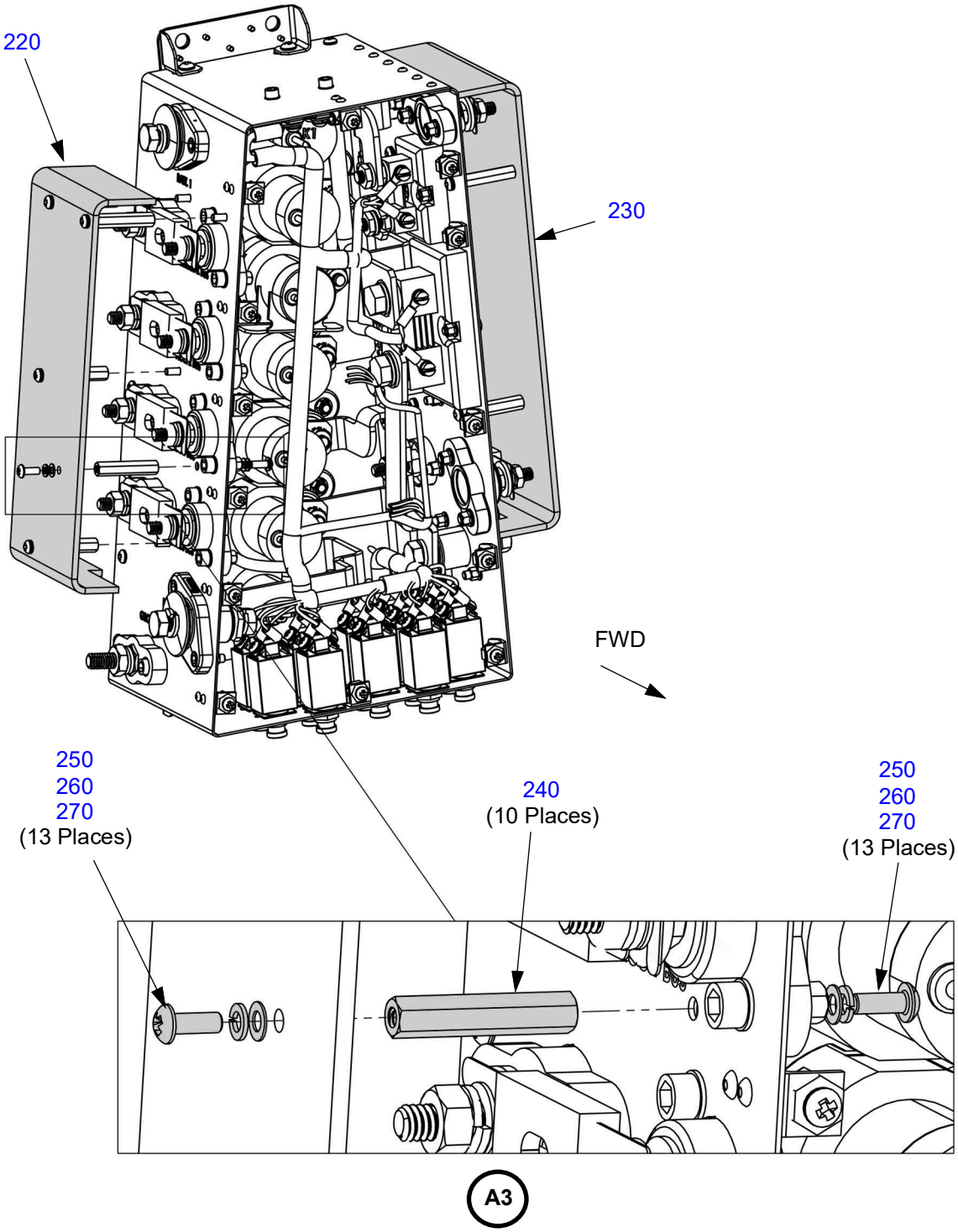

Figure 24-30.2: Master Control Unit (MCU) (Continued)

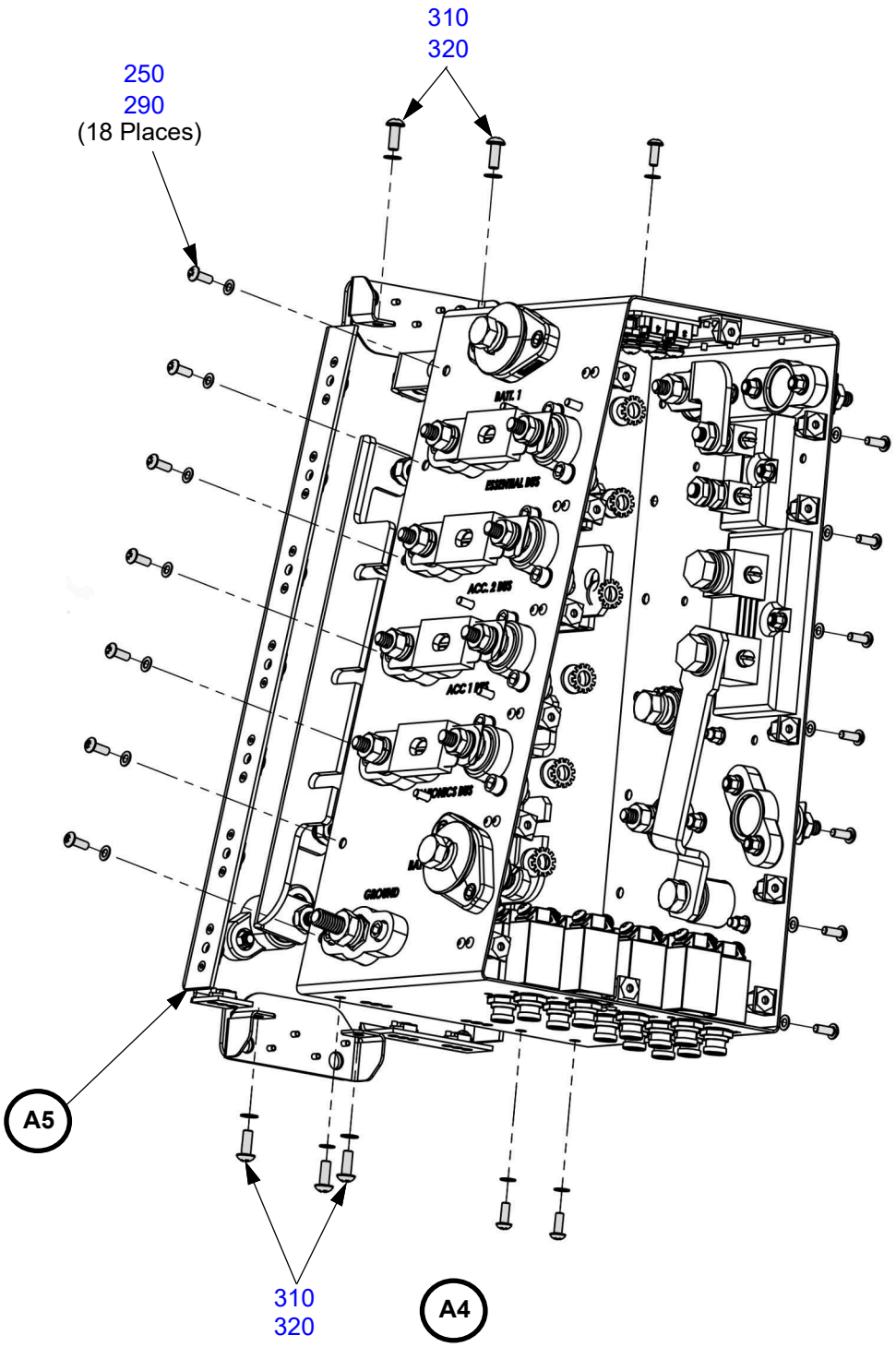

Figure 24-30.2: Master Control Unit (MCU) (Continued)

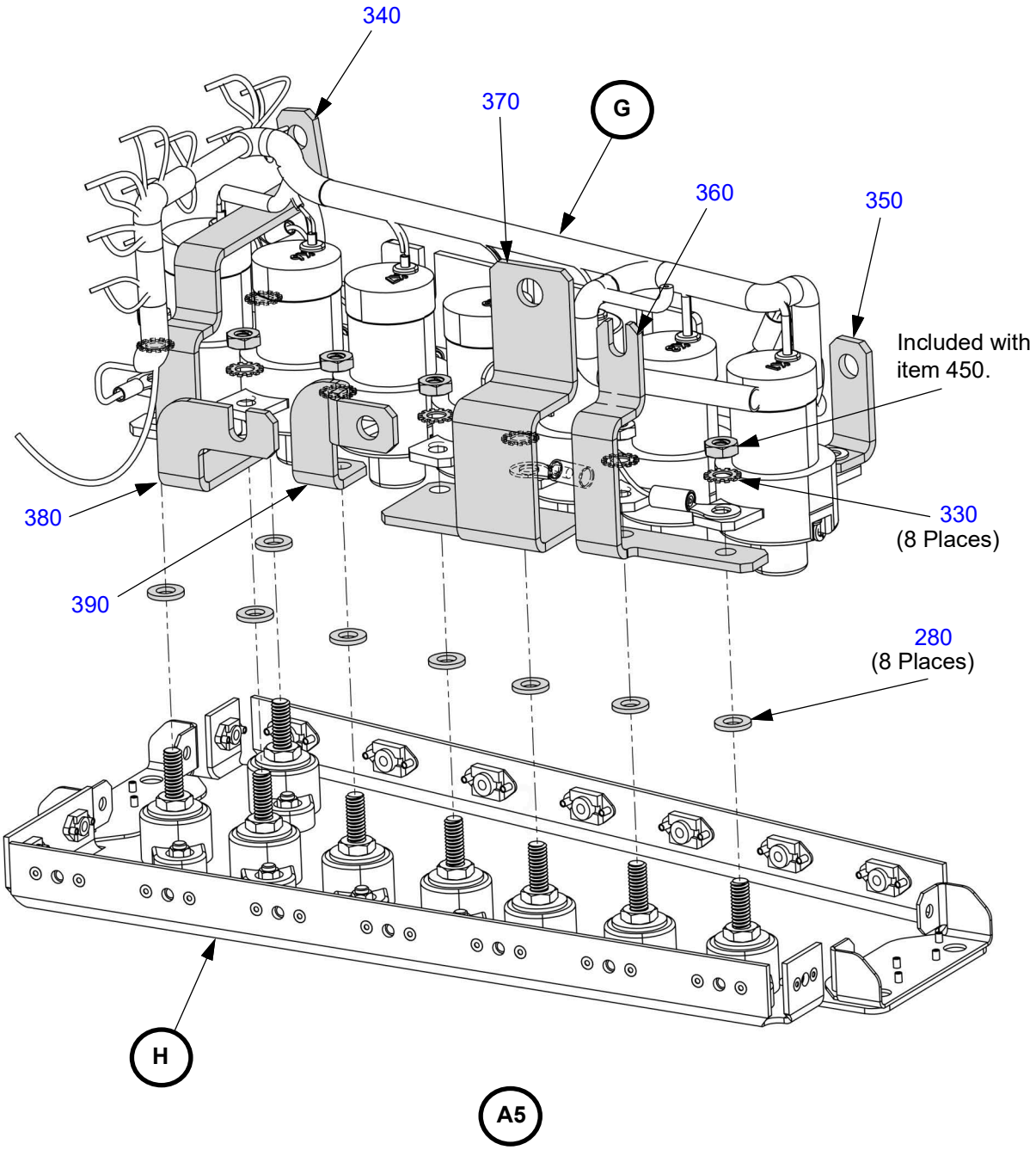

Figure 24-30.2: Master Control Unit (MCU) (Continued)

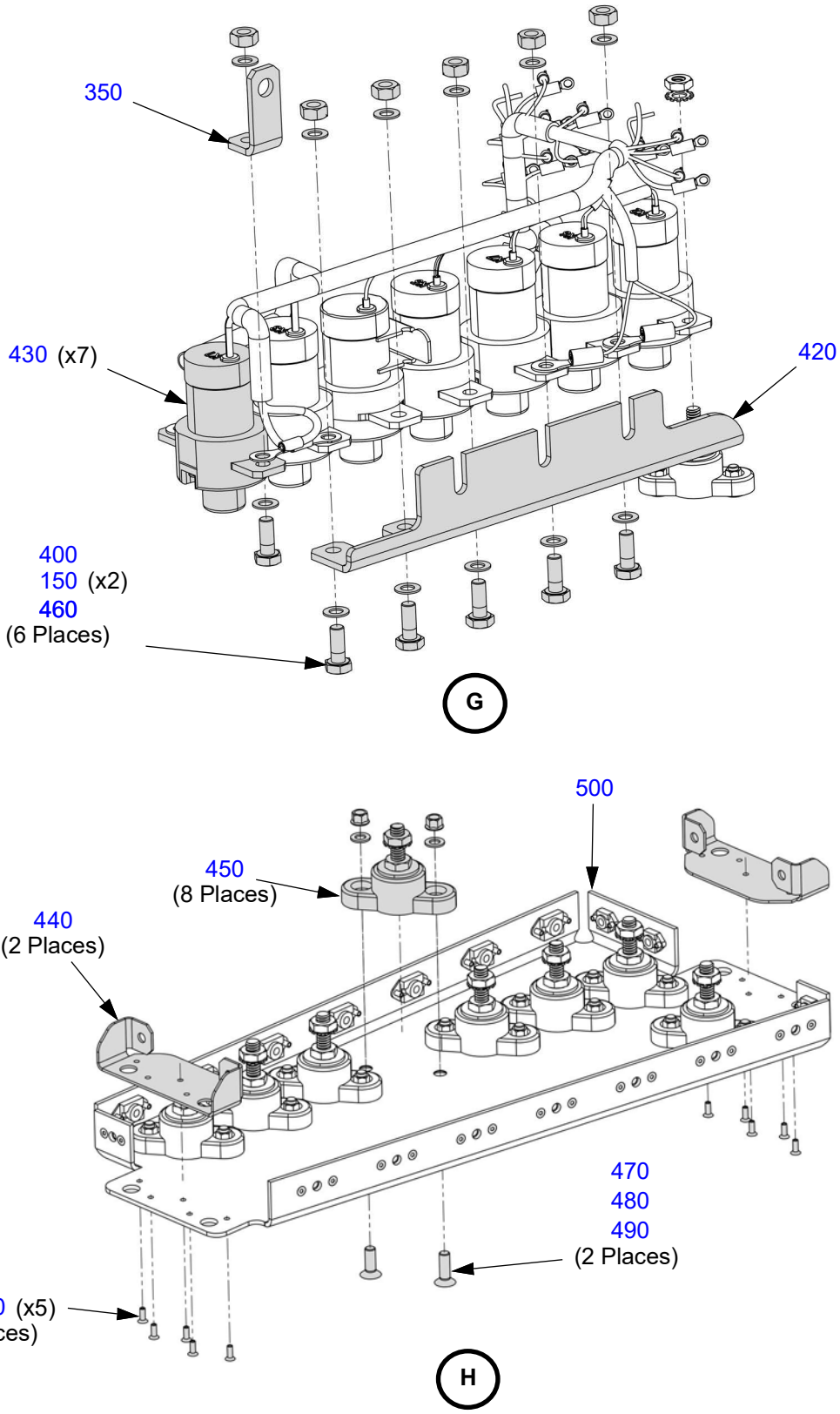

Figure 24-30.2: Master Control Unit (MCU) (Continued)

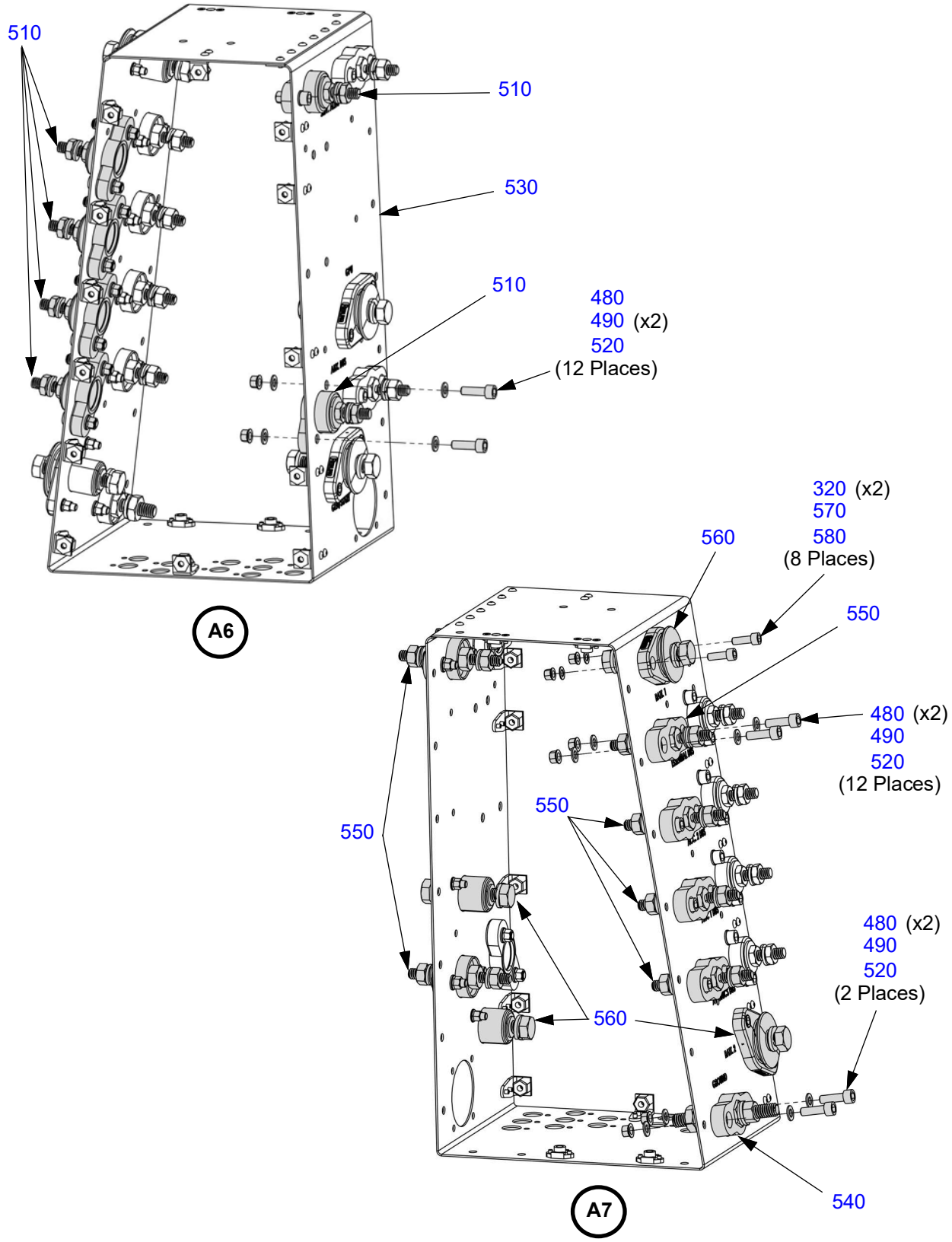

Figure 24-30.2: Master Control Unit (MCU) (Continued)

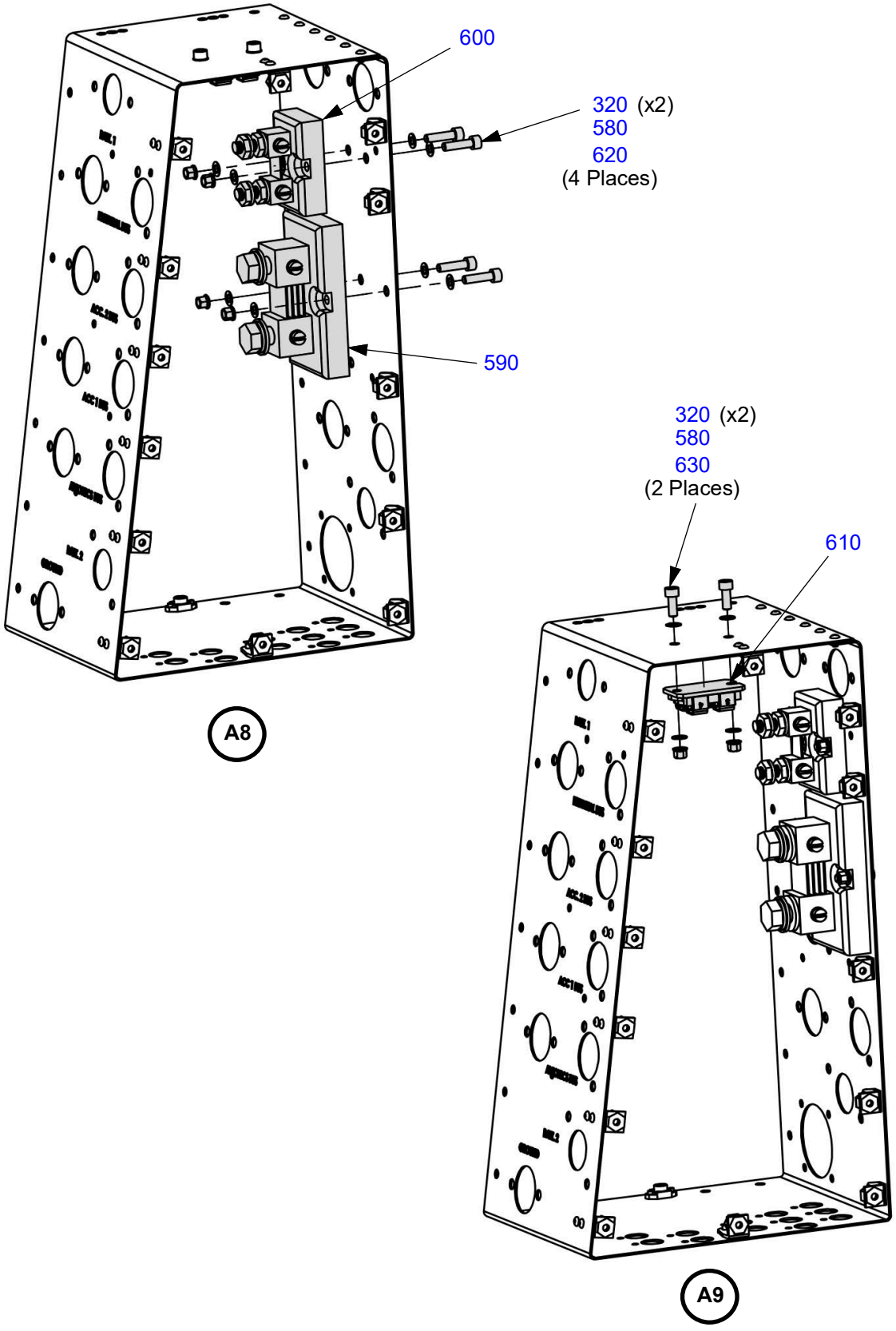

Table 24-30.2: Master Control Unit (MCU)

Figure Item Number	Part Number	Part Name	Effectivity Code	Amount in Assy.
10	PK99008011	Master Control Unit, MCU	K003 - K048	1
20	AN4-14A	Bolt, 1/4-28 x 1-17/32" Undrilled	K003 and On	2
30	AN4-15A	Bolt, 1/4-28 x 1-21/32" Undrilled	K003 and On	2
40	AN970-4	Washer, Flat 1/4 x .063	K003 and On	4
50	NAS1149F0432P	Washer, Flat 1/4 x .032	K003 and On	4
60	MS21042L4	Nut, Self-locking, 450°, Reduced 1/4-28	K003 and On	4
70*	ANL 50	Fuse, 80VDC, 50 AMP	K003 and On	4
80*	ANL 80	Fuse, 80VDC, 80 AMP	K003 and On	1
90*	ANL 150	Fuse, 80VDC, 150 AMP	K003 and On	1
100	AK24701000	Assembly, MCU	K049 and On	1
110	MS51957-29	Screw, Pan Head, .138 x .438 Lg., Cres	K049 and On	13
120	NAS620C6	Washer, Reduced O.D., Cres, .143 I.D. x .2678 O.D.	K049 and On	13
130	PK24710002	MCU Enclosure, Access Panel	K049 and On	1
140	NAS1351C4-10P	Screw, Socket Head, Cres, Ø .250-28 x .625	K049 and On	6
150	NAS620C416L	Washer, Reduced O.D., Cres, .255 I.D. x .468 O.D.	K049 and On	24
160	MS21043-4	Nut, Self-locking, 800°, Reduced 1/4-28	K049 and On	6
170	PK99008003	Ground Power Module, Lamar Technologies	K049 and On	1
180	X-D4N-300M	E-M Relay, 2 Form C, DPDT, 5 AMP @ 28VDC	K049 and On	1
190	PK24710009	Bracket, Relay, MCU	K049 and On	1
200	7277-2-5	Klixon: Push-pull Circuit Breaker, 5A	K049 and On	11
210	7277-2-10	Klixon: Push-pull Circuit Breaker, 10A	K049 and On	1
220	PK24710005	Terminal Cover, MCU	K049 and On	1
230	PK24710008	Terminal Cover, Inboard, MCU	K049 and On	1

Figure Item Number	Part Number	Part Name	Effectivity Code	Amount in Assy.
240	NAS1831AC4C21	Standoff, Female, 1/4" Hex x 1-5/16" Long, 6-32, Cres	K049 and On	10
250	MS51957-28	Screw, Pan Head, .138 x .375 Lg., Cres	K049 and On	32
260	MS35338-136	Washer, Lock-spring, Cres, Ø.138	K049 and On	10
270	NAS620C6	Washer, Reduced O.D., Cres, .143 I.D. x .2678 O.D.	K049 and On	10
280	NAS1149F0463P	Washer, Flat 1/4 x .063	K049 and On	11
290	NAS620C6	Washer, Reduced O.D., Cres, .143 I.D. x .2678 O.D.	K049 and On	26
300	MS21043-06	Nut, Self-locking, 800°, Reduced #6-32	K049 and On	4
310	MS51957-44	Screw, Pan Head, .164 x .437 Lg., Cres	K049 and On	4
320	NAS620C8	Washer, Reduced O.D., Cres, .169 I.D. x .304 O.D.	K049 and On	24
330	MS35335-33	Washer, Lock, Flat-external Tooth, Ø.250	K049 and On	8
340	PK24700010	Busbar, Battery 2 Input Stud To K2 Relay, MCU	K049 and On	1
350	PK24700009	Busbar, Battery 1 Input Stud To K1 Relay, MCU	K049 and On	1
360	PK24700008	Busbar, Shunt To K1 And K3 Relays, MCU	K049 and On	1
370	PK24700006	Busbar, K4 And K5 Relays To Input Stud, MCU	K049 and On	1
380	PK24700005	Busbar, Auxillary Fuse To K6 Relay, MCU	K049 and On	1
390	PK24700004	Busbar, GPU Input Stud To K7 Relay, MCU	K049 and On	1
400	AN4C5A	Bolt, 1/4-28 x 21/32" Undrilled, Cres	K049 and On	6
410	MS21083C4	Corrosion Steel Nut, Self-locking, Non-metallic Insert 1/4-28	K049 and On	6
420	PK24700001	Busbar, Main, MCU	K049 and On	1

Figure Item Number	Part Number	Part Name	Effectivity Code	Amount in Assy.
430	6-1616998-5 6-1616998-6 (Alternate) 2-1616921-3 (Alternate)	Contactor, Single-pole Single-throw, 28 VDC	K049 and On	7
440	PK24710001	MCU Enclosure, Doubler Bracket	K049 and On	2
450	77025N14	Single Pt. Power Dist. Post, 1/4" Small Junct. Stud, Black	K049 and On	8
460	CCR264SS-3-03	Cherry Pull-thru Rivet, C'sunk Ø 3/32 x .255	K049 and On	10
470	MS24694-C50	Screw, Machine, C'sunk, Cres Ø .190 x 17/32	K049 and On	16
480	NAS620C10L	Washer, Reduced O.D., Cres, .195 I.D. x .354 O.D.	K049 and On	68
490	MS21043-3	Nut, Self-locking, 800°, Reduced #10-32	K049 and On	42
500	AK24710003	Assembly, MCU Enclosure, Firewall Attachment	K049 and On	1
510	77025N02	Single Pt. Power Dist. Post, 1/4" Small Junct. Stud, Red	K049 and On	6
520	NAS1351C3-10P	Screw, Socket Head, Cres, Ø .190-32 x .625	K049 and On	26
530	AK24710004	Assembly, MCU Enclosure, Main	K049 and On	1
540	77231N14	Pass Thru Junction Stud, 5/16" Stud, Black	K049 and On	1
550	77225N14	Single Pt. Pass Thru Power Post, 1/4" Stud, Black	K049 and On	6
560	SFT-P-R-516	250 Amp, SFT Style, Lithium Battery Terminal	K049 and On	4
570	NAS1352C08-8P	Screw, Socket Head .164-32 x .500, Cres	K049 and On	8
580	MS21043-08	Nut, Self-locking, 800°, Reduced #8-32	K049 and On	14
590	LB-600-50	DC Ammeter Shunt, 600 Amp	K049 and On	1
600	LA-100-50	DC Ammeter Shunt, 100 Amp	K049 and On	1

Figure Item Number	Part Number	Part Name	Effectivity Code	Amount in Assy.
610	DSEP2X91-06A	Rectifier, 2 x 90 Amp, 600 Volt	K049 and On	1
620	NAS1352C08-10P	Screw, Socket Head .164-32 x .625, Cres	K049 and On	4
630	NAS1352C08-7P	Screw, Socket Head .164-32 x .438, Cres	K049 and On	2

*Also applicable to item 10.

Figure 24-30.3: Starter Generator and Alternator

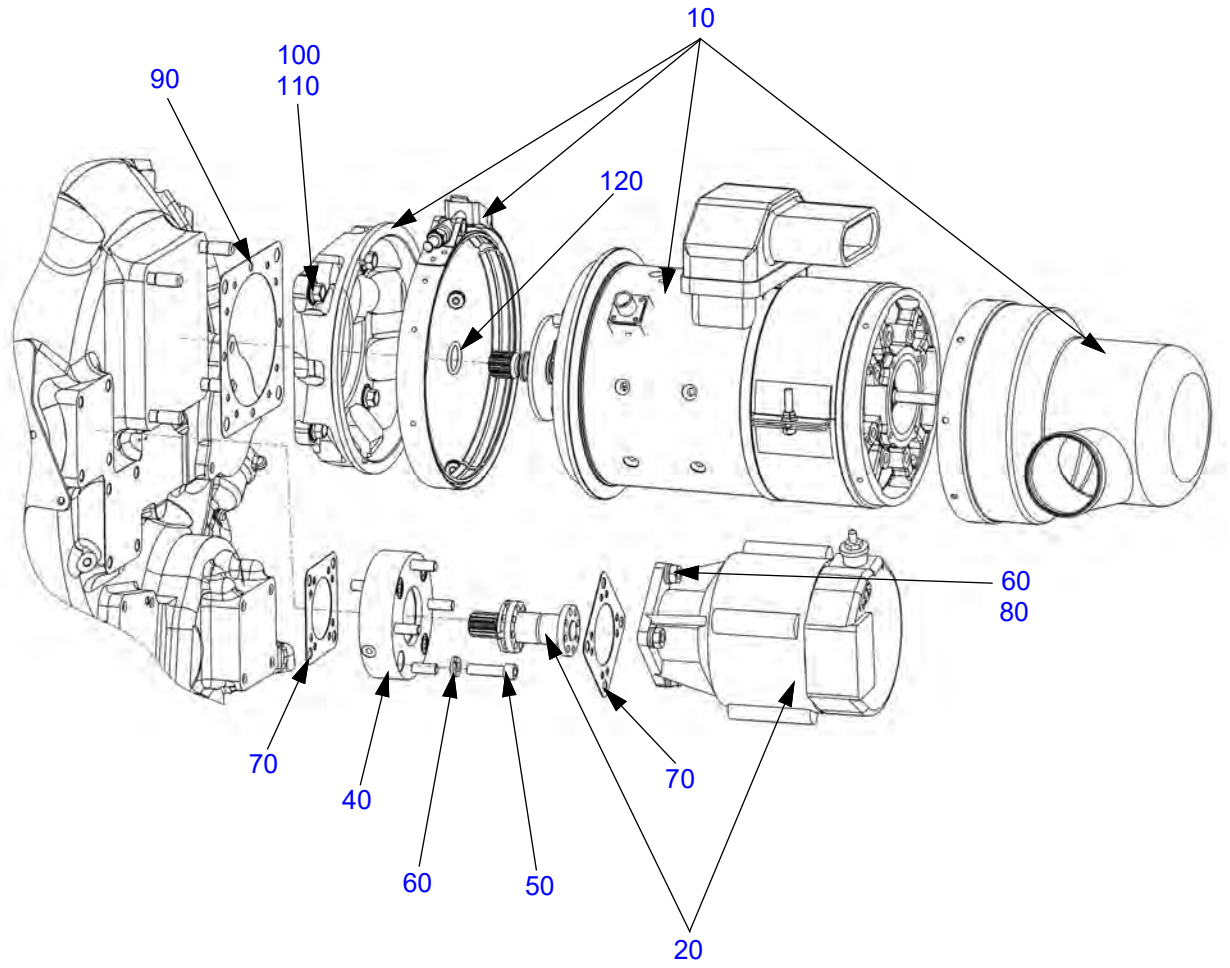

Table 24-30.3: Starter Generator and Alternator

Figure Item Number	Part Number	Part Name	Effectivity Code	Amount in Assy.
10	300SGL152Q-3-1	Skurka: Starter Generator	K003 and On	1
	250SG1108-1	Clamp	K003 and On	1
	300SGL1040-2	QAD Mount	K003 and On	1
	300SGL1011-27	Fan Cover	K003 and On	1
*	300SGL1009-7	Brush	K003 and On	4
20	PK99007049	Alternator, SD20, Extended, For PT6	K003 and On	1
*30	PK99007081	Installation Kit, Alternator (Note: Kit includes items 40, 50, 60, 70, and 80.)	K003 and On	1
40	711-200-2	Spacer	K003 and On	1
50	NAS1351-4-16P	Cap Screw	K003 and On	4
60	MS35338-44	Lockwasher	K003 and On	16
70	MS9134-01	Gasket	K003 and On	2
	AS3491-01	Gasket (Alternate)	K003 and On	2
80	MS35649-2252	Nut	K003 and On	4
90	MS9135-01	Gasket-type XI Engine Accessory Drive	K003 and On	1
100	NAS1149F0532P	Washer, Flat 5/16 x 0.032	K003 and On	4
110	MS21042L5	Nut, Self-locking, 450°, Reduced 5/16-24	K003 and On	4
120	M83248/1-113	O-Ring	K003 and On	1

* Item not illustrated.

Figure 24-30.4: Generator Control Unit (GCU)

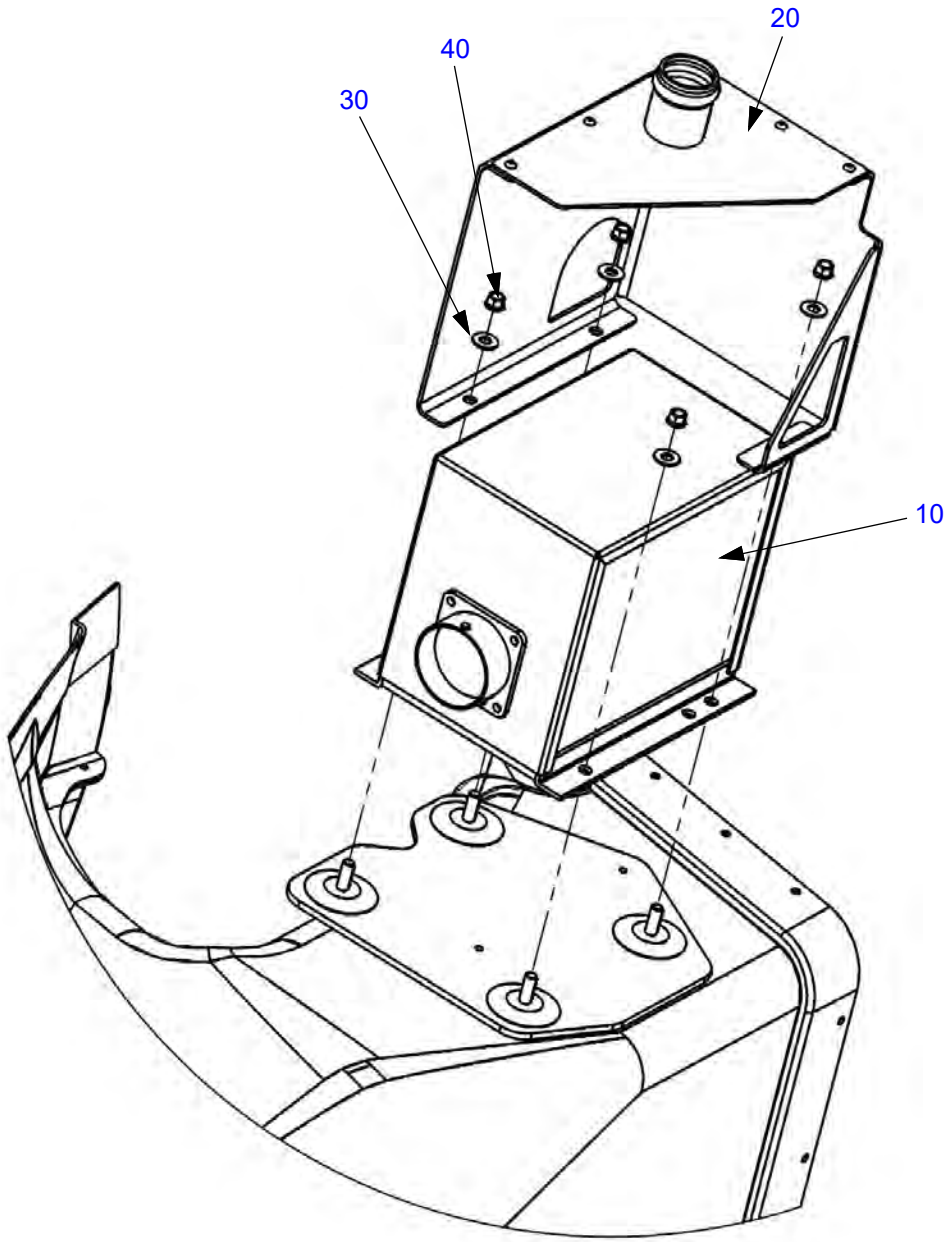

Table 24-30.4: Generator Control Unit (GCU)

Figure Item Number	Part Number	Part Name	Effectivity Code	Amount in Assy.
10	GCSG505-15C1	Skurka: D.C. Generator Control Unit	K003 and On	1
20	AK71803000	Assembly, Cooling Shroud, GCU	K003 and On	1
30	NAS1149C0332R	Washer, Flat, CRES #10 x .032	K003 and On	4
40	MS21042L3	Nut, Self-locking, 450°, Reduced #10-32	K003 and On	4

Figure 24-30.5: Alternator Control Unit (ACU)

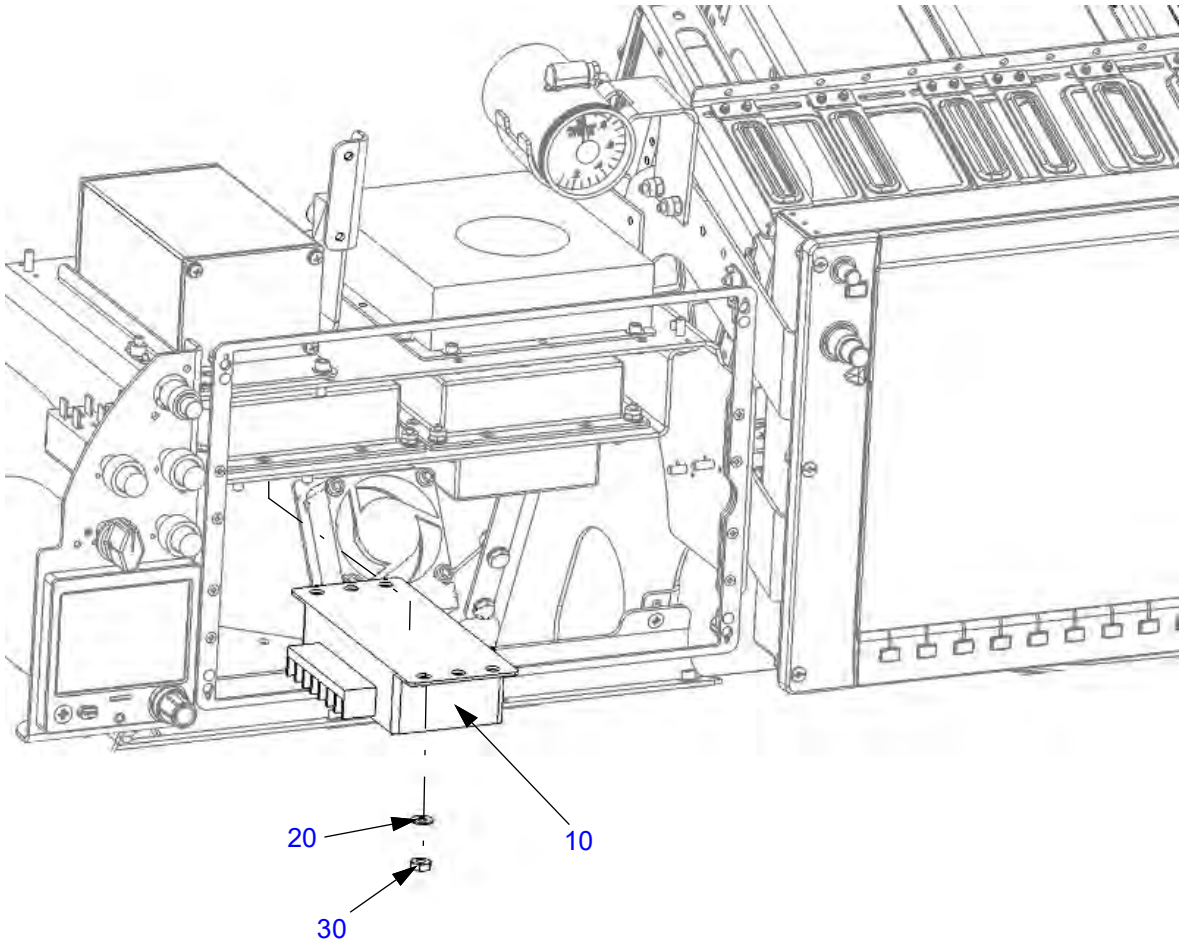

Table 24-30.5: Alternator Control Unit (ACU)

Figure Item Number	Part Number	Part Name	Effectivity Code	Amount in Assy.
10	BC203-2E	Alternator Control Unit	K003 and On	1
20	NAS1149F0332P	Washer, Flat #10 x .032	K003 and On	4
30	MS21044N3	Nut, Self-locking, Steel 10-32	K003 and On	4

Figure 24-30.6: Ground Fault Transformer

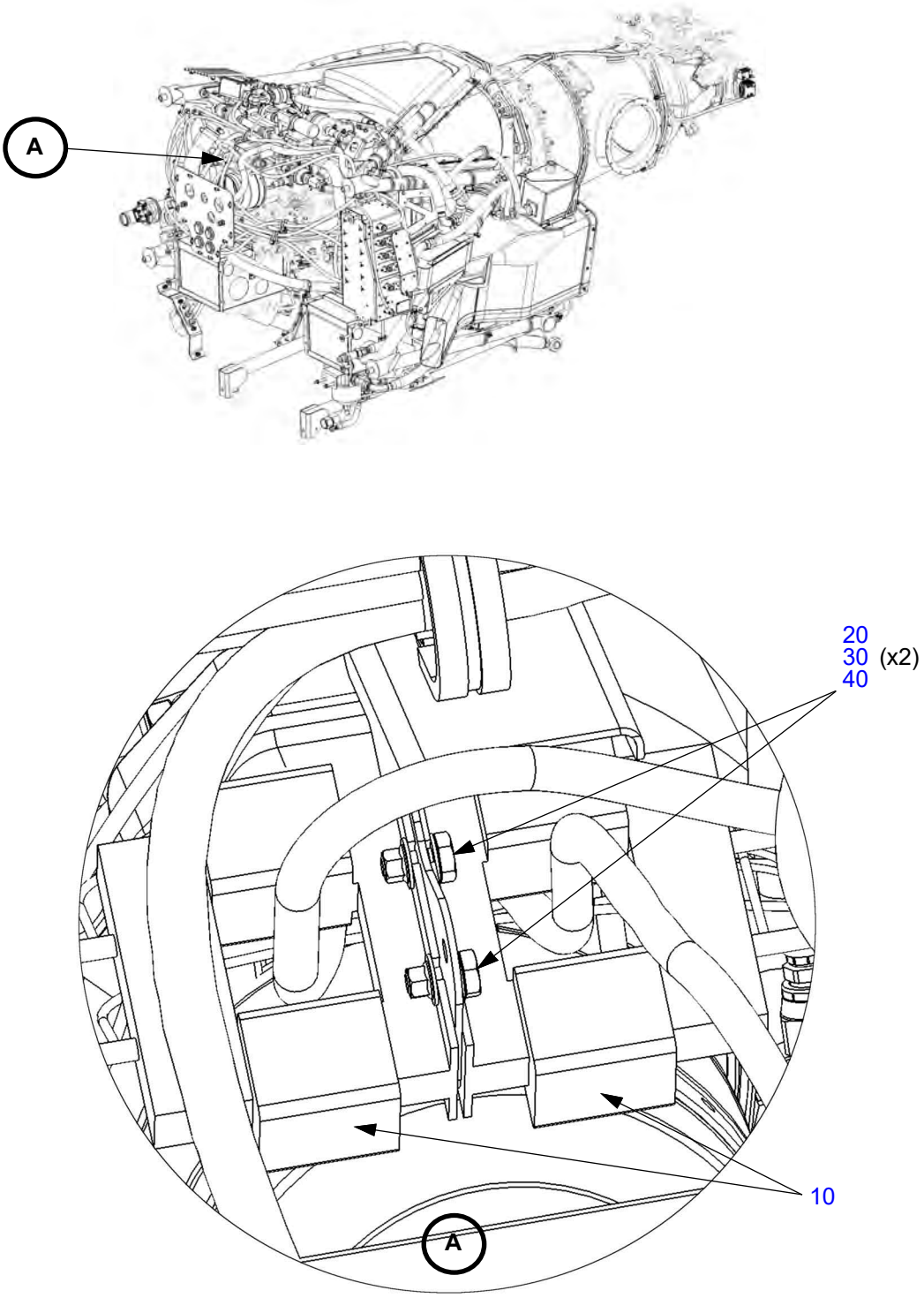

Table 24-30.6: Ground Fault Transformer

Figure Item Number	Part Number	Part Name	Effectivity Code	Amount in Assy.
10	CTSG700	Ground Fault Transformer	K003 and On	2
20	AN3-3A	Bolt, 10-32 x 15/32" Undrilled	K003 and On	4
30	NAS1149F0332P	Washer, Flat #10 x .032	K003 and On	8
40	MS21042L3	Nut, Self-locking, 450°, Reduced #10-32	K003 and On	4

This Page Intentionally Left Blank

EXTERNAL POWER

Figure 24-40.1: Ground Power Socket

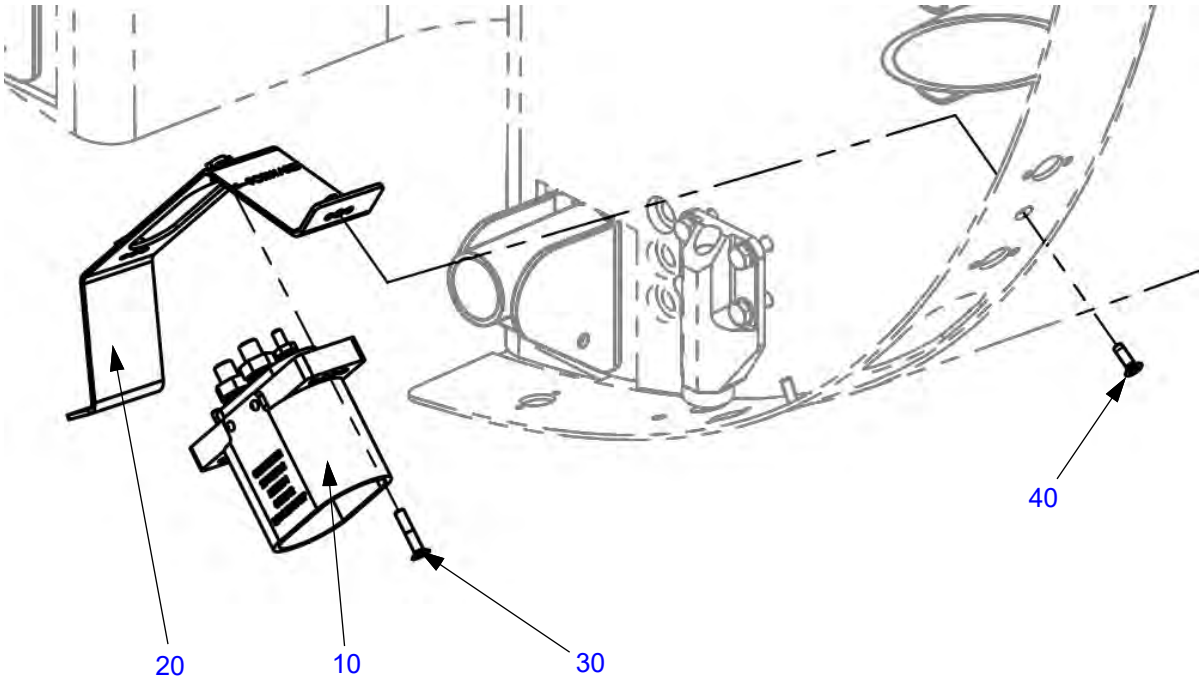

Table 24-40.1: Ground Power Socket

Figure Item Number	Part Number	Part Name	Effectivity Code	Amount in Assy.
10	MS3506-1	Connector, Oval, External Power, 28VDC	K003 and On	1
20	AK24400003	Brkt Assy, Mtg, External Power Connector	K003 and On	1
30	MS24694-S57	Screw, Machine, C'sunk 0.190 x 31/32	K003 and On	2
40	MS24694-S51	Screw, Machine, C'sunk 0.190 x 19/32	K003 and On	2

DC ELECTRICAL LOAD DISTRIBUTION

Figure 24-60.1: Circuit Breaker Panel, Left (SN: K003 and On)

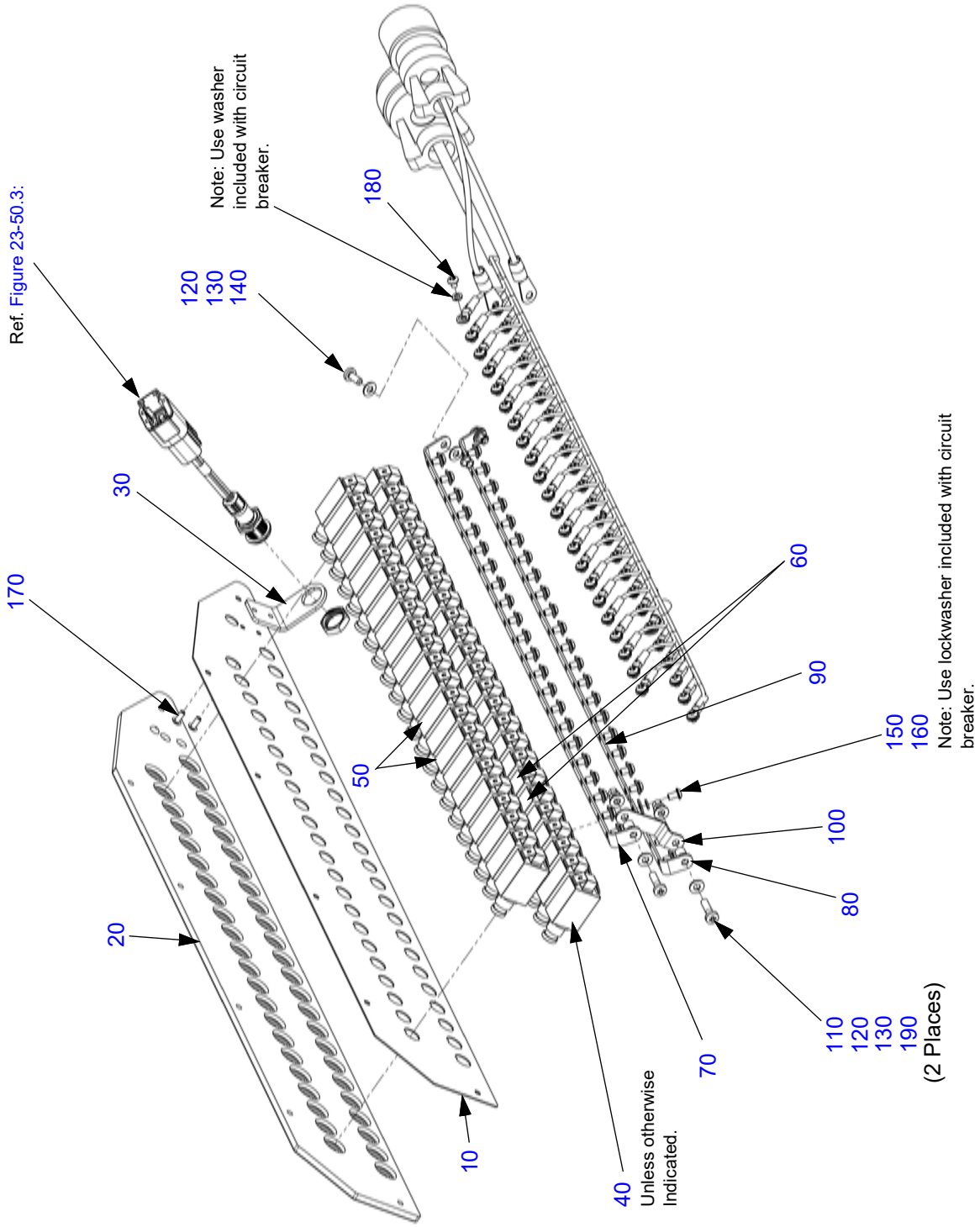

Table 24-60.1: Circuit Breaker Panel, Left (SN: K003 and On)

Figure Item Number	Part Number	Part Name	Effectivity Code	Amount in Assy.
10	PK39103002	Circuit Breaker Backing Plate, LH	K003 and On	1
20	PK39103003	Light Plate, Left Circuit Breaker	K003 and On	1
30	PK39103005	Bracket, Headphone Jack	K003 and On	1
40	7277-2-5	Circuit Breaker, 5A, Klixon	K003 and On	42
50	7277-2-10	Circuit Breaker, 10A, Klixon	K003 and On	2
60	7277-2-15	Circuit Breaker, 15A, Klixon	K003 and On	2
70	PK24600010	Essential Long Bus Bar	K003 and On	1
80	PK24600011	Essential Short Bus Bar	K003 and On	1
90	PK24600012	Avionics Bus Bar	K003 and On	1
100	PK24601001	Bus Bar, Circuit Breaker Assembly, Left	K003 and On	1
110	NAS43DD2-16A	Spacer, Aluminum .171 ID x .250 OD x .250	K003 and On	2
120	MS21042L08	Nut, Self-locking, 450°, Reduced #8-32	K003 and On	4
130	NAS1149FN832P	Washer, Flat #8 x 0.032	K003 and On	8
140	MS27039-0806	Screw, Pan Head, 0.164 x 0.406 Lg.	K003 and On	4
150	MS51975-26	Screw, Pan Head, 0.138 x 0.250 Lg., CRES	K003 and On	46
160	NAS1149FN632P	Washer, Flat #6 x 0.032	K003 and On	46
170	CR3523-4-03	Cherry Uni-head Rivet, Monel Ø 1/8 x .287	K003 and On	2
180	MS51957-25	Screw, Pan Head, 0.138 x 0.188 Lg., CRES	K003 and On	46
190	MS27039-0810	Screw, Pan Head, .164 x .656 Lg.	K003 and On	2
200*	MS24693-29B	Screw, Machine, C'sunk, Blk Oxide Ø .138 x 0.625	K003 and On	6

* Panel installation screws not illustrated.

Figure 24-60.2: Circuit Breaker Panel, Right (SN: K003-K010)

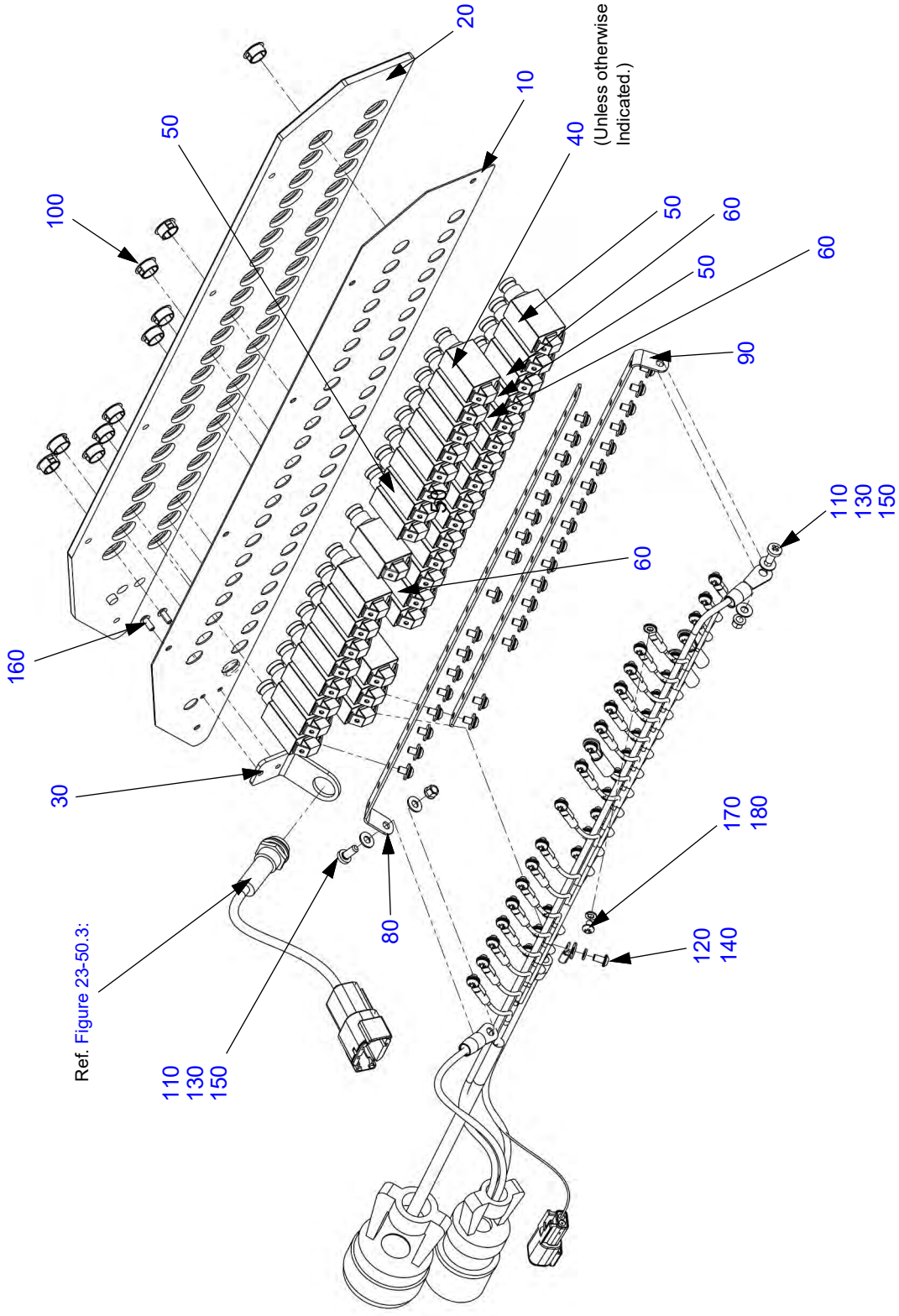

Table 24-60.2: Circuit Breaker Panel, Right (SN: K003-K010)

Figure Item Number	Part Number	Part Name	Effectivity Code	Amount in Assy.
10	PK39103004	Circuit Breaker Backing Plate, RH	K003 - K010	1
20	PK39104002	Light Plate, Right Circuit Breaker	K003 - K010	1
30	PK39103005	Bracket, Headphone Jack	K003 - K010	1
40	7277-2-5	Circuit Breaker, 5A, Klixon	K003 - K010	29
50	7277-2-10	Circuit Breaker, 10A, Klixon	K003 - K010	3
60	7277-2-15	Circuit Breaker, 15A, Klixon	K003 - K010	3
70	Deleted			
80	PK24600013	Acc 1 Bus Bar	K003 - K010	1
90	PK24600014	Acc 2 Bus Bar	K003 - K010	1
100	PK99007093	Hole Plug, 7/16" Dia Hole, 0.062" Thk, Nylon, Black	K003 - K010	10
110	NAS1149FN832P	Washer, Flat #8 x 0.032	K003 - K010	4
120	NAS1149FN632P	Washer, Flat #6 x 0.032	K003 - K010	35
130	MS27039-0806	Screw, Pan Head, 0.164 x 0.406 Lg.	K003 - K010	2
140	MS51957-26	Screw, Pan Head, 0.138 x 0.250 Lg., CRES	K003 - K010	35
150	MS21042L08	Nut, Self-locking, 450°, Reduced #8-32	K003 - K010	2
160	CR3523-4-03	Cherry Uni-head Rivet, Monel Ø 1/8 x .287	K003 - K010	2
170	MS51957-25	Screw, Pan Head, 0.138 x 0.188 LG., CRES	K003 - K010	35
180	MS35338-136	Washer, Lock-spring, CRES, Ø.138	K003 - K010	6
190*	MS24693-29B	Screw, Machine, C'sunk, Blk Oxide Ø .138 x 0.625	K003 - K010	6

* Panel installation screws not illustrated.

Figure 24-60.3: Circuit Breaker Panel, Right (SN: K011 and On)

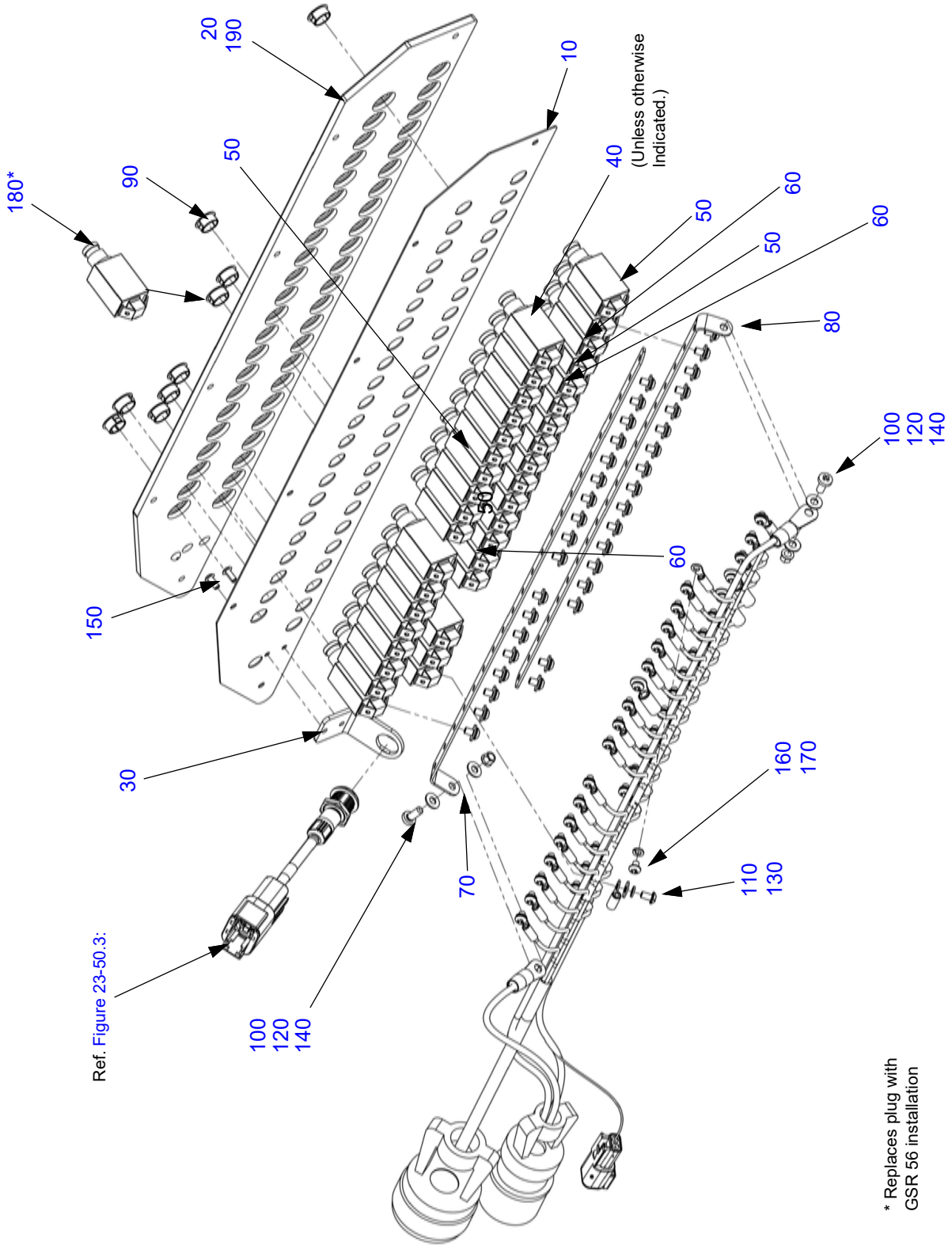

Table 24-60.3: Circuit Breaker Panel, Right (SN: K011 and On)

Figure Item Number	Part Number	Part Name	Effectivity Code	Amount in Assy.
10	PK39103004	Circuit Breaker Backing Plate, RH	K011 and On*	1
20	PK39104003	Light Plate, Right Circuit Breaker	K011 and On*	1
30	PK39103005	Bracket, Headphone Jack	K011 and On*	1
40	7277-2-5	Circuit Breaker, 5A, Klixon	K011 and On*	30
50	7277-2-10	Circuit Breaker, 10A, Klixon	K011 and On*	3
60	7277-2-15	Circuit Breaker, 15A, Klixon	K011 and On*	3
70	PK24600013	Acc 1 Bus Bar	K011 and On*	1
80	PK24600014	Acc 2 Bus Bar	K011 and On*	1
90	PK99007093	Hole Plug, 7/16" Dia Hole, 0.062" Thk, Nylon, Black	K011 and On*	9
100	NAS1149FN832P	Washer, Flat #8 x 0.032	K011 and On*	4
110	NAS1149FN632P	Washer, Flat #6 x 0.032	K011 and On*	36
120	MS27039-0806	Screw, Pan Head, 0.164 x 0.406 Lg.	K011 and On*	2
130	MS51957-26	Screw, Pan Head, 0.138 x 0.250 Lg., CRES	K011 and On*	36
140	MS21042L08	Nut, Self-locking, 450°, Reduced #8-32	K011 and On*	2
150	CR3523-4-03	Cherry Uni-head Rivet, Monel Ø 1/8 x .287	K011 and On*	2
160	MS51957-25	Screw, Pan Head, 0.138 x 0.188 LG., CRES	K011 and On*	36
170	MS35338-136	Washer, Lock-spring, CRES, Ø.138	K011 and On*	6
180	7277-2-5	Circuit Breaker, 5A, Klixon	Optional**	1
190	PK39104004	Light Plate, Right Circuit Breaker, GSR 56	Optional**	1
200***	MS24693-29B	Screw, Machine, C'sunk, Blk Oxide Ø .138 x 0.625	K011 and On*	6

* (Also SN:K003-K010 with SB-0017)
** (K003 - K010 with SB-0017 and SB-0019, K011 and on with SB-0019.)
*** Panel installation screws not illustrated.

Figure 24-60.4: Switch Panel, LH

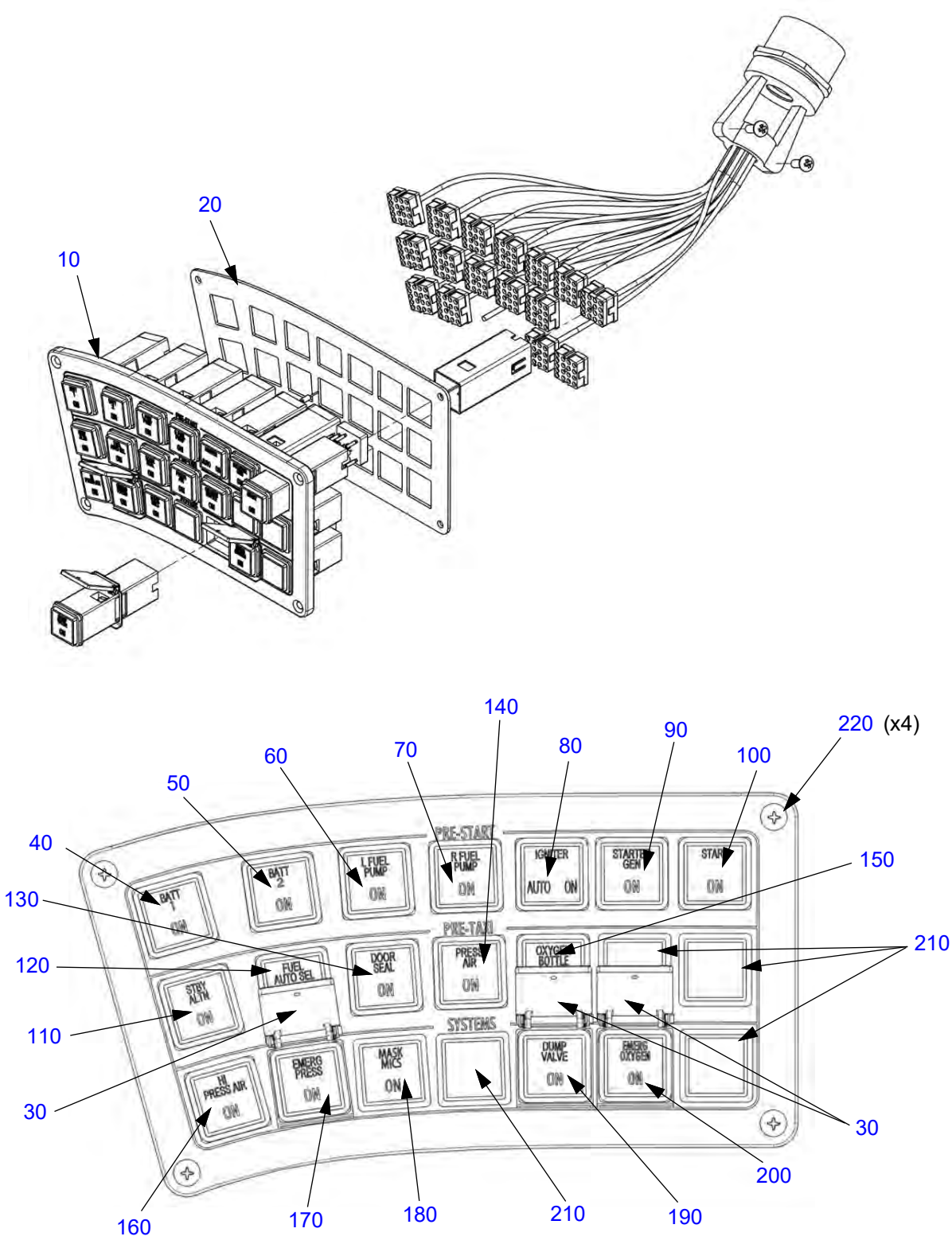

Table 24-60.4: Switch Panel, LH

Figure Item Number	Part Number	Part Name	Effectivity Code	Amount in Assy.
10	PK39101001	Switch Plate, LH	K003 and On	1
20	PK39101002	Switch Plate Support, LH	K003 and On	1
30	PK99007069	Switch Flip Guard	K003 and On	3
40	PK99008101	BATT 1 Switch	K003 and On	1
50	PK99008102	BATT 2 Switch	K003 and On	1
60	PK99008103	L FUEL PUMP Switch	K003 and On	1
70	PK99008104	R FUEL PUMP Switch	K003 and On	1
80	PK99008105	IGNITER Switch	K003 and On	1
90	PK99008106	STARTER GEN Switch	K003 and On	1
100	PK99008107	START Switch	K003 and On	1
110	PK99008108	STBY ALT Switch	K003 and On	1
120	PK99008128	FUEL AUTO SEL Switch	K003 and On	1
130	PK99008133	DOOR SEAL Switch	K003 and On	1
140	PK99008113	PRESS AIR Switch	K003 and On	1
150	PK99008055	OXYGEN BOTTLE Switch	K003 and On	1
160	PK99008129	HI PRESS AIR Switch	K003 and On	1
170	PK99008115	EMERG PRESS Switch	K003 and On	1
180	PK99000155	MASK MICS Switch	K003 and On	1
190	PK99008114	DUMP VALVE Switch	K003 and On	1
200	PK99008127	EMERG OXYGEN Switch	K003 and On	1
210	PK99008135	Blank Switch	K003 and On	4
220	MS24693-31B	Screw, Machine, C'sunk, Blk Oxide Ø .138 x 0.875	K003 and On	4

Figure 24-60.5: Switch Panel, RH

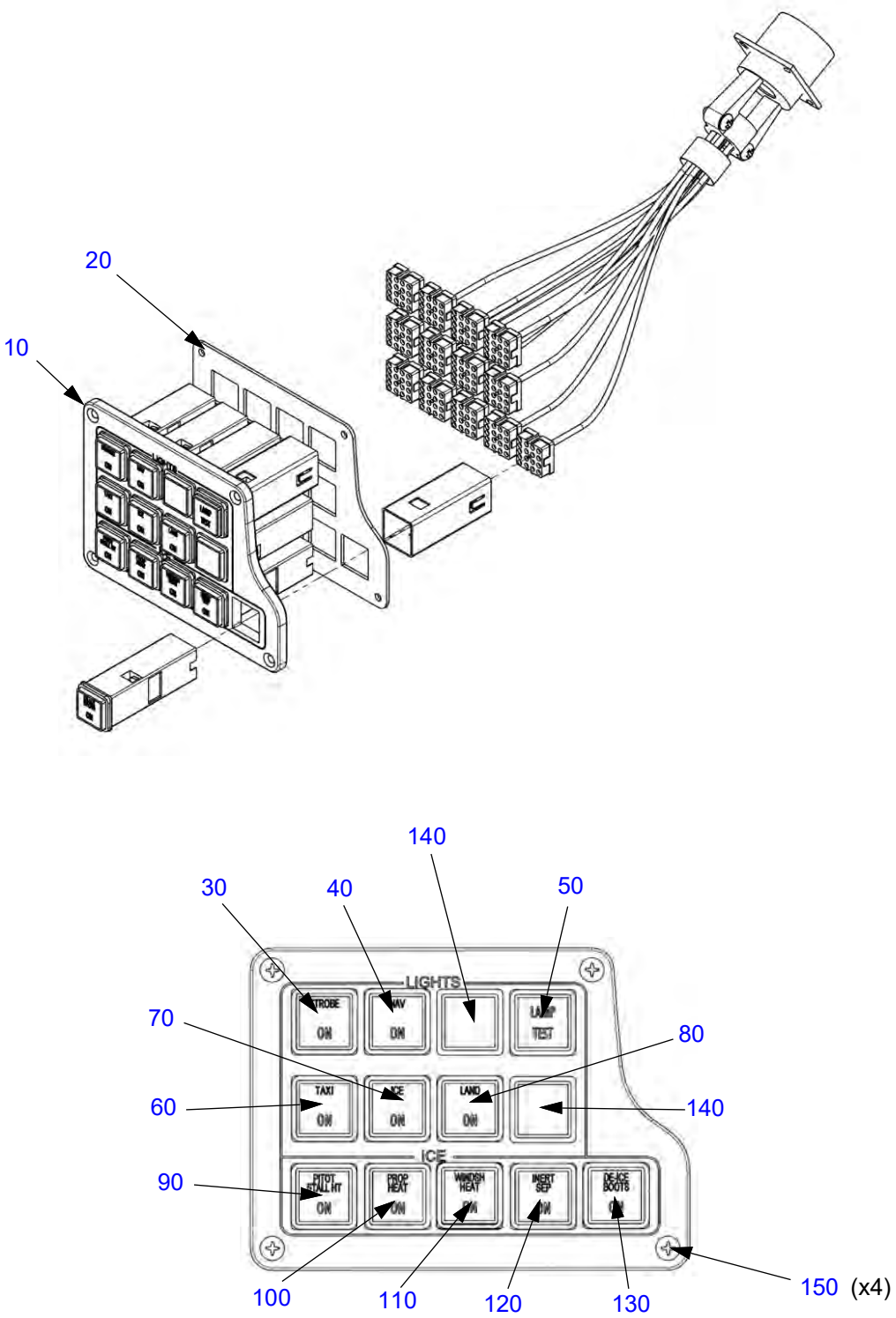

Table 24-60.5: Switch Panel, RH

Figure Item Number	Part Number	Part Name	Effectivity Code	Amount in Assy.
10	PK39102001	Switch Plate, RH	K003 and On	1
20	PK39102002	Switch Plate Support, RH	K003 and On	1
30	PK99008124	STROBE Switch	K003 and On	1
40	PK99008125	NAV Switch	K003 and On	1
50	PK99008136	LAMP TEST Switch	K003 and On	1
60	PK99008123	TAXI Switch	K003 and On	1
70	PK99008121	ICE Switch	K003 and On	1
80	PK99008122	LAND Switch	K003 and On	1
90	PK99008120	PITOT STALL HT Switch	K003 and On	1
100	PK99008117	PROP HEAT Switch	K003 and On	1
110	PK99008118	WINSH HEAT Switch	K003 and On	1
120	PK99008119	INERT SEP Switch	K003 and On	1
130	PK99008116	DE-ICE BOOTS Switch	K003 and On	1
140	PK99008135	Blank Switch	K003 and On	2
150	MS24693-31B	Screw, Machine, C'sunk, Blk Oxide Ø .138 x 0.875	K003 and On	4

Figure 24-60.6: Test Switch Panel

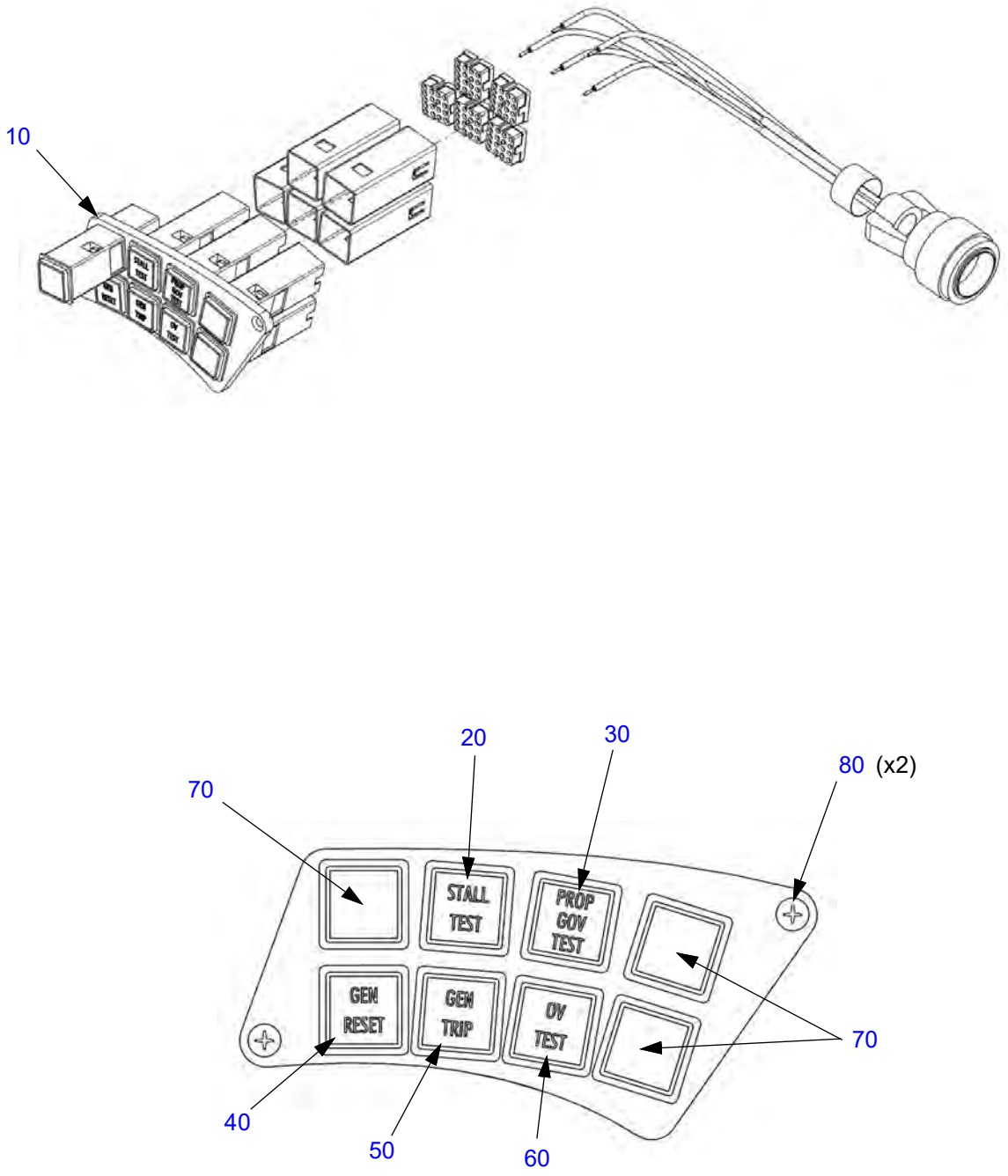

Table 24-60.6: Test Switch Panel

Figure Item Number	Part Number	Part Name	Effectivity Code	Amount in Assy.
10	PK39106002	Test Switch Support, LH	K003 and On	1
20	PK99008148	STALL TEST Switch	K003 and On	1
30	PK99008147	PROP GOV TEST Switch	K003 and On	1
40	PK99008145	GEN RESET Switch	K003 and On	1
50	PK99008144	GEN TRIP Switch	K003 and On	1
60	PK99008146	OV TEST Switch	K003 and On	1
70	PK99008135	Blank Switch	K003 and On	3
80	MS24693-28B	Screw, Machine, C'sunk, Blk Oxide Ø .138 x 0.500	K003 and On	2

Figure 24-60.7: USB Ports

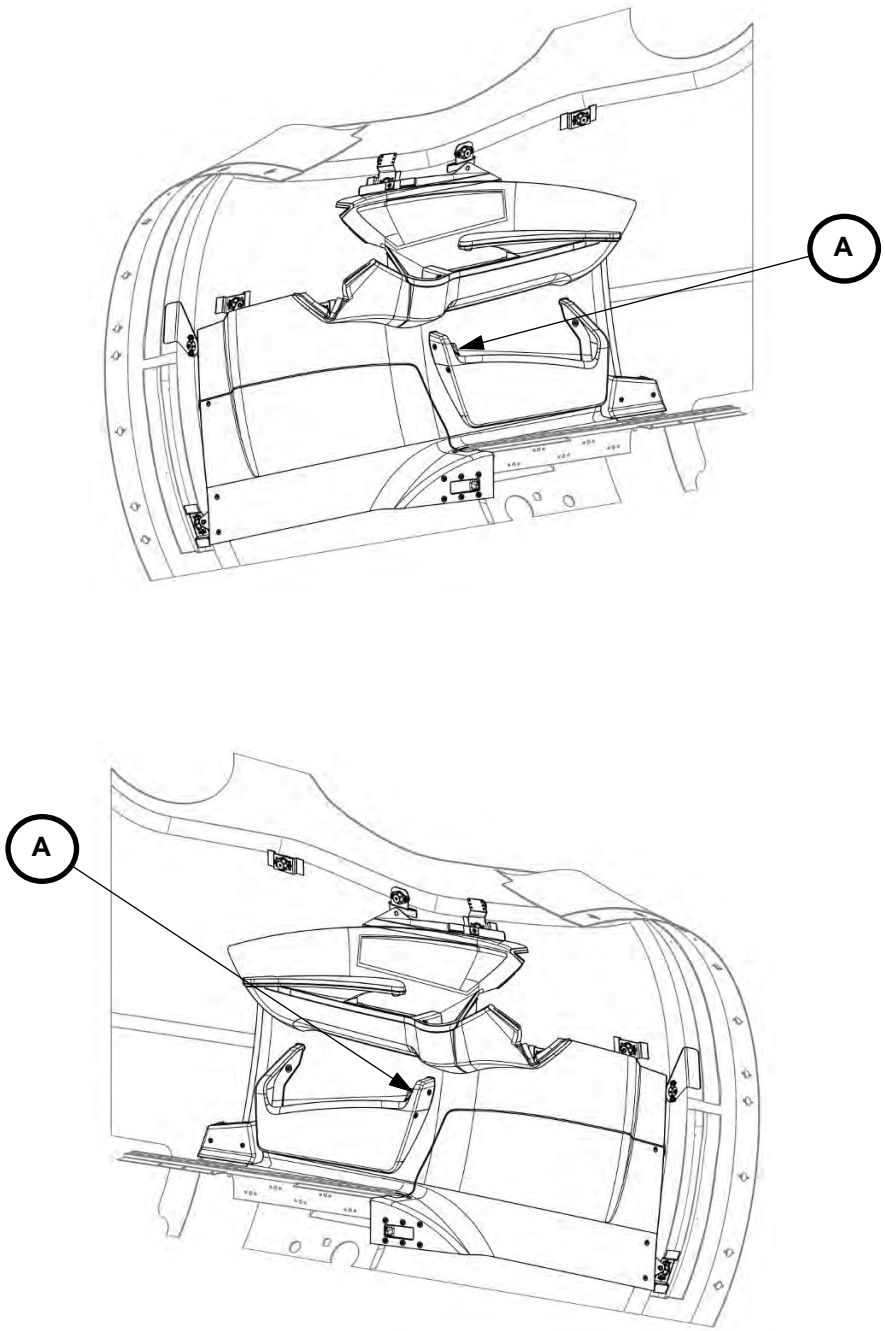

Figure 24-60.7: USB Ports (Continued)

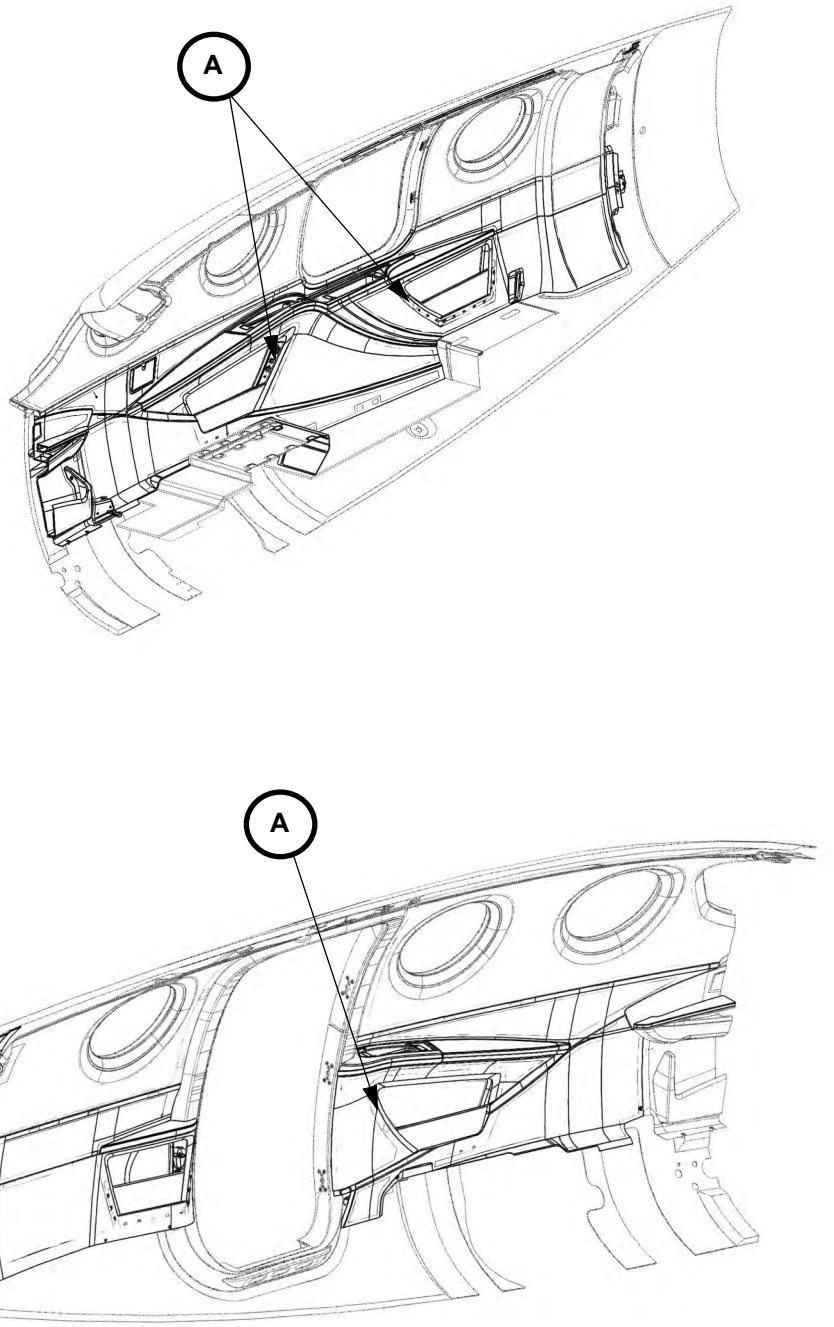

Figure 24-60.7: USB Ports (Continued)

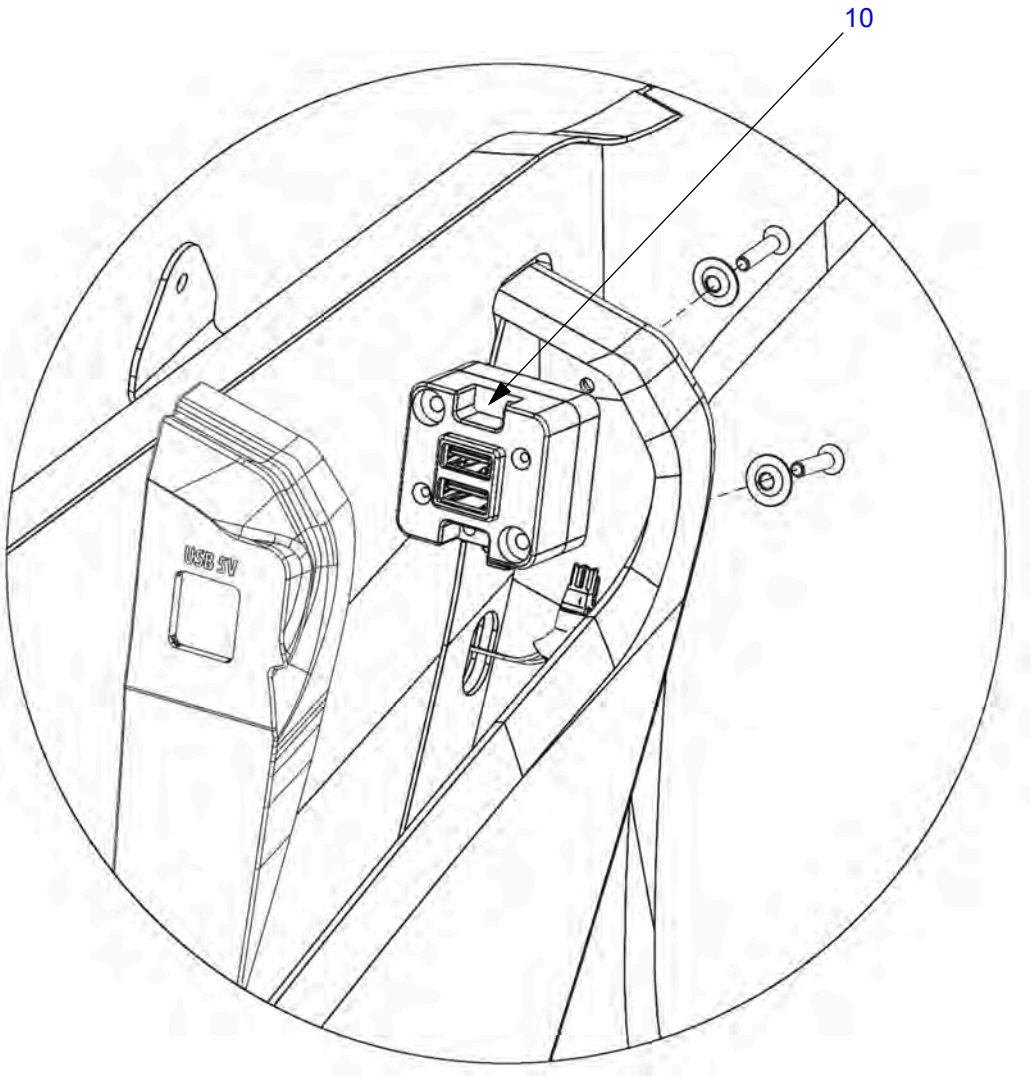

Table 24-60.7: USB Ports

Figure Item Number	Part Number	Part Name	Effectivity Code	Amount in Assy.
10	6430202-12	USB Charging Port, Lighted, Bottom Input, True Blue (Includes connector kit PN 9017960)	K003 and On	5

Figure 24-60.8: Power Outlets

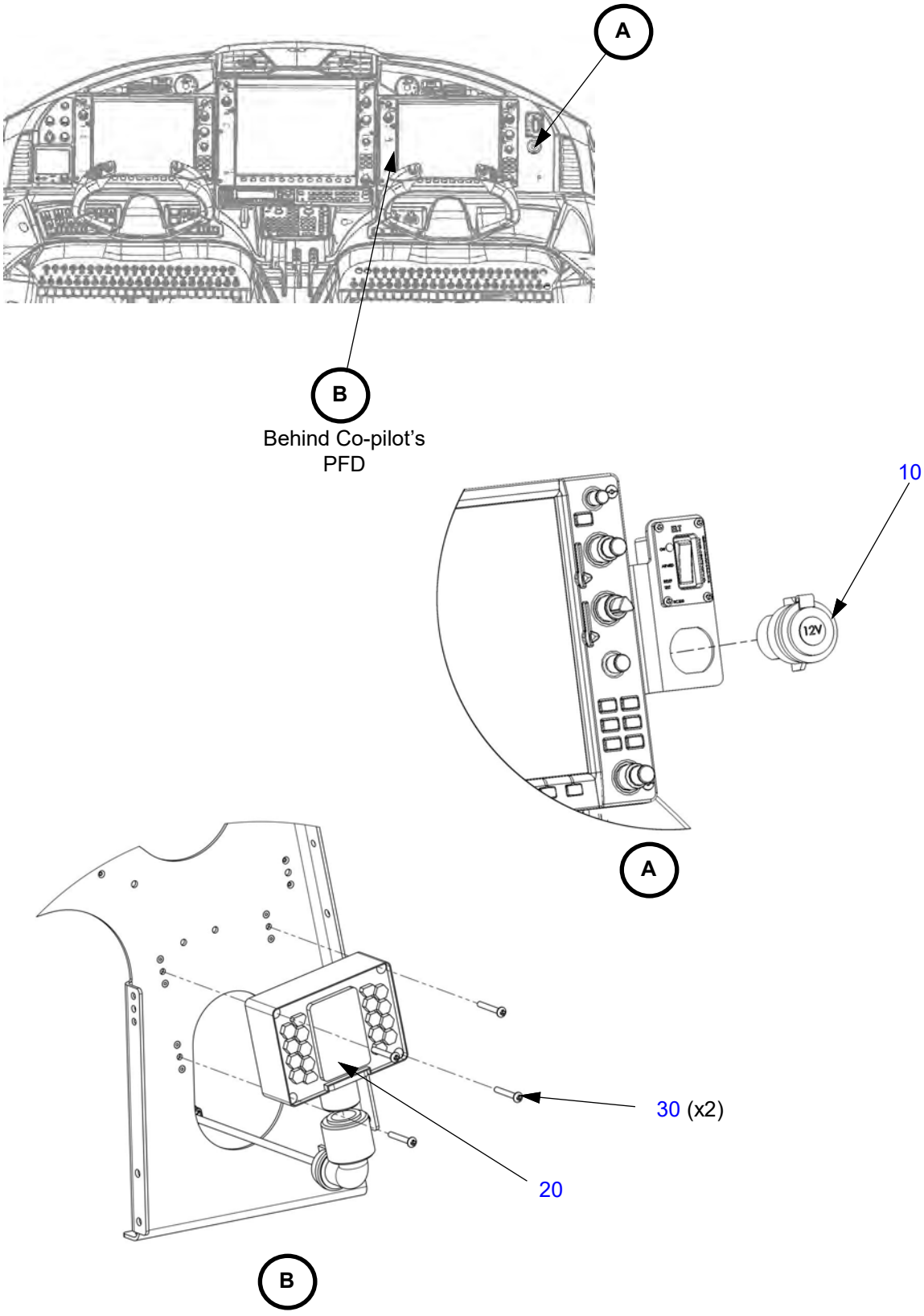

Figure 24-60.8: Power Outlets (Continued)

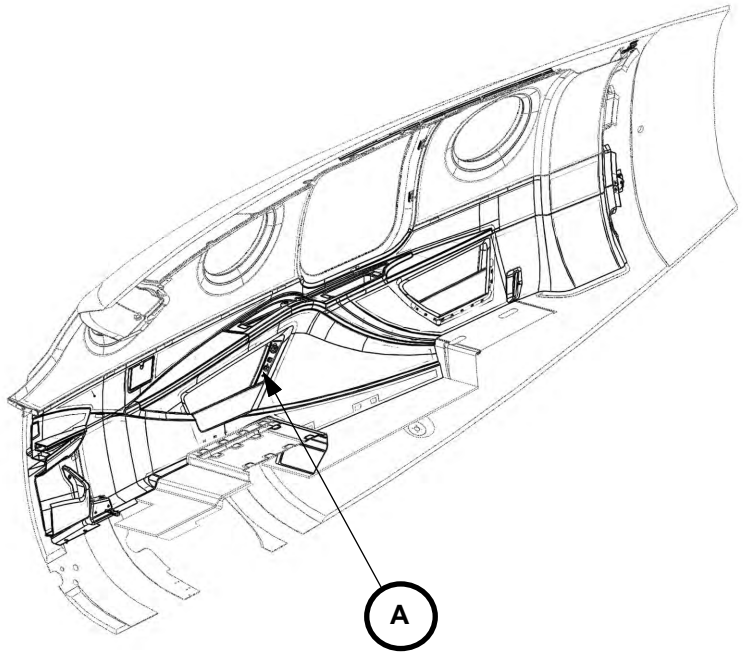

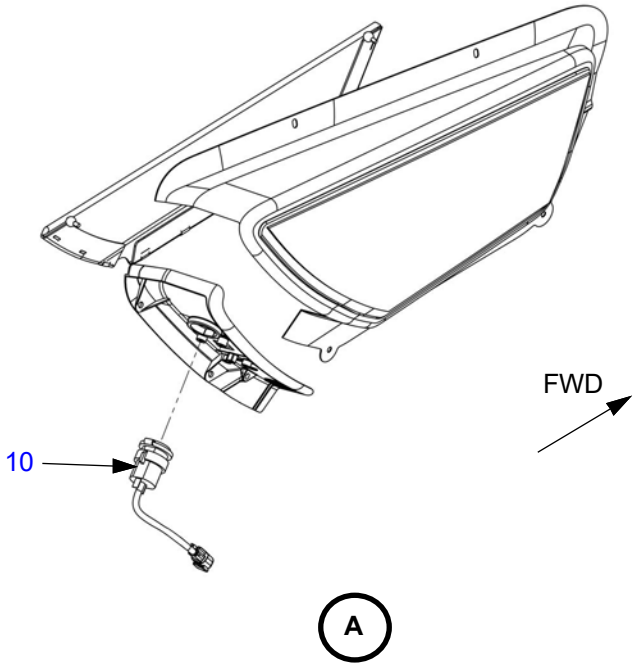

Table 24-60.8: Power Outlets

Figure Item Number	Part Number	Part Name	Effectivity Code	Amount in Assy.
10	11020	DC Power Outlet, 20A, 12V	K003 and On	2
20	6430240-1	Converter, DC/DC, 240W, Model TC240	K003 and On	1
30	MS51957-34	Screw, Pan Head, .138 x 1.000 LG., CRES	K003 and On	4

This Page Intentionally Left Blank

CHAPTER
25

Equipment and Furnishings

This Page Intentionally Left Blank

Table of Contents
and
List of Effective Pages

Chapter/Section	Page Number	Effective Date
25-Title	Page 1	03 Apr 2020
25-Title	Page 2	03 Apr 2020
25-LOEP	Page 1	26 Mar 2024
25-LOEP	Page 2	14 Jul 2021
25-LOEP	Page 3	03 Apr 2020
25-LOEP	Page 4	03 Apr 2020
25-TOC	Page 1	03 Apr 2020
25-TOC	Page 2	03 Apr 2020
Flight Compartment		
25-10	Page 1	03 Apr 2020
25-10	Page 2	26 Mar 2024
25-10	Page 3	03 Apr 2020
25-10	Page 4	03 Apr 2020
25-10	Page 5	03 Apr 2020
25-10	Page 6	13 Jan 2023
25-10	Page 7	13 Jan 2023
25-10	Page 8	03 Apr 2020
25-10	Page 9	03 Apr 2020
25-10	Page 10	03 Apr 2020
25-10	Page 11	03 Apr 2020
25-10	Page 12	03 Apr 2020
25-10	Page 13	03 Apr 2020
25-10	Page 14	03 Apr 2020
25-10	Page 15	03 Apr 2020
25-10	Page 16	03 Apr 2020
25-10	Page 17	03 Apr 2020
25-10	Page 18	03 Apr 2020
25-10	Page 19	03 Apr 2020
25-10	Page 20	03 Apr 2020
25-10	Page 21	03 Apr 2020
25-10	Page 22	03 Apr 2020
25-10	Page 23	03 Apr 2020
25-10	Page 24	03 Apr 2020
25-10	Page 25	03 Apr 2020
25-10	Page 26	03 Apr 2020
25-10	Page 27	03 Apr 2020

25-10 ..... Page 28 ..... 03 Apr 2020
25-10 ..... Page 29 ..... 03 Apr 2020
25-10 ..... Page 30 ..... 03 Apr 2020
25-10 ..... Page 31 ..... 03 Apr 2020
25-10 ..... Page 32 ..... 03 Apr 2020
25-10 ..... Page 33 ..... 14 Jul 2021
25-10 ..... Page 34 ..... 14 Jul 2021
25-10 ..... Page 35 ..... 14 Jul 2021
25-10 ..... Page 36 ..... 14 Jul 2021

Passenger Compartment

25-20 ..... Page 1 ..... 03 Apr 2020
25-20 ..... Page 2 ..... 03 Apr 2020
25-20 ..... Page 3 ..... 14 Jul 2021
25-20 ..... Page 4 ..... 13 Jan 2023
25-20 ..... Page 5 ..... 14 Jul 2021
25-20 ..... Page 6 ..... 13 Jan 2023
25-20 ..... Page 7 ..... 03 Apr 2020
25-20 ..... Page 8 ..... 03 Apr 2020
25-20 ..... Page 9 ..... 03 Apr 2020
25-20 ..... Page 10 ..... 03 Apr 2020
25-20 ..... Page 11 ..... 03 Apr 2020
25-20 ..... Page 12 ..... 03 Apr 2020
25-20 ..... Page 13 ..... 03 Apr 2020
25-20 ..... Page 14 ..... 03 Apr 2020
25-20 ..... Page 15 ..... 03 Apr 2020
25-20 ..... Page 16 ..... 03 Apr 2020
25-20 ..... Page 17 ..... 03 Apr 2020
25-20 ..... Page 18 ..... 03 Apr 2020
25-20 ..... Page 19 ..... 03 Apr 2020
25-20 ..... Page 20 ..... 03 Apr 2020
25-20 ..... Page 21 ..... 03 Apr 2020
25-20 ..... Page 22 ..... 03 Apr 2020
25-20 ..... Page 23 ..... 03 Apr 2020
25-20 ..... Page 24 ..... 03 Apr 2020
25-20 ..... Page 25 ..... 03 Apr 2020
25-20 ..... Page 26 ..... 03 Apr 2020

Cargo Compartment

25-50 ..... Page 1 ..... 03 Apr 2020
25-50 ..... Page 2 ..... 03 Apr 2020
25-50 ..... Page 3 ..... 03 Apr 2020
25-50 ..... Page 4 ..... 03 Apr 2020
25-50 ..... Page 5 ..... 03 Apr 2020
25-50 ..... Page 6 ..... 03 Apr 2020

ELT Installation

25-60 ..... Page 1 ..... 03 Apr 2020
25-60 ..... Page 2 ..... 03 Apr 2020
25-60 ..... Page 3 ..... 03 Apr 2020
25-60 ..... Page 4 ..... 03 Apr 2020

Insulation

25-80 ..... Page 1 ..... 03 Apr 2020
25-80 ..... Page 2 ..... 03 Apr 2020
25-80 ..... Page 3 ..... 03 Apr 2020
25-80 ..... Page 4 ..... 03 Apr 2020

This Page Intentionally Left Blank

CHAPTER 25

Table of Contents

List of Effective Pages ..... 25-LOEP / Page 1
Table of Contents ..... 25-TOC / Page1

Paragraph **Page Number**

Flight Compartment

Figure 25-10.1: Crew Seats ..... 25-10 / Page 1
Table 25-10.1: Crew Seats ..... 25-10 / Page 2
Figure 25-10.2: Pedestal Finish Panels ..... 25-10 / Page 3
Table 25-10.2: Pedestal Finish Panels ..... 25-10 / Page 5
Figure 25-10.3: Instrument Panel Switch Bezels ..... 25-10 / Page 6
Table 25-10.3: Instrument Panel Switch Bezels ..... 25-10 / Page 7
Figure 25-10.4: Carpet ..... 25-10 / Page 8
Table 25-10.4: Carpet ..... 25-10 / Page 9
Figure 25-10.5: Crew Finish Panels, RH ..... 25-10 / Page 10
Table 25-10.5: Crew Finish Panels, RH ..... 25-10 / Page 13
Figure 25-10.6: Crew Finish Panels, LH ..... 25-10 / Page 15
Table 25-10.6: Crew Finish Panels, LH ..... 25-10 / Page 18
Figure 25-10.7: Glare Shield ..... 25-10 / Page 20
Table 25-10.7: Glare Shield ..... 25-10 / Page 23
Figure 25-10.8: Overhead Panels ..... 25-10 / Page 24
Table 25-10.8: Overhead Panels ..... 25-10 / Page 26
Figure 25-10.9: Sunvisors and Grab Handle ..... 25-10 / Page 27
Table 25-10.9: Sunvisors and Grab Handle ..... 25-10 / Page 30
Figure 25-10.10: Rudder Boots ..... 25-10 / Page 31
Table 25-10.10: Rudder Boots ..... 25-10 / Page 32
Figure 25-10.11: Display Bezels ..... 25-10 / Page 33
Table 25-10.11: Display Bezels ..... 25-10 / Page 35

Passenger Compartment

Figure 25-20.1: Passenger Seats ..... 25-20 / Page 1
Table 25-20.1: Passenger Seats ..... 25-20 / Page 2
Figure 25-20.2: Flooring ..... 25-20 / Page 3
Table 25-20.2: Flooring ..... 25-20 / Page 5
Figure 25-20.3: Overhead Finish Panel ..... 25-20 / Page 7
Table 25-20.3: Overhead Finish Panel ..... 25-20 / Page 9
Figure 25-20.4: Upper Finish Panels, LH ..... 25-20 / Page 10
Table 25-20.4: Upper Finish Panels, LH ..... 25-20 / Page 12

Figure 25-20.5: Upper Finish Panels, RH ..... 25-20 / Page 13
Table 25-20.5: Upper Finish Panels, RH ..... 25-20 / Page 15

Figure 25-20.6: Lower Finish Panels, LH ..... 25-20 / Page 16
Table 25-20.6: Lower Finish Panels, LH ..... 25-20 / Page 20
Figure 25-20.7: Lower Finish Panels, RH ..... 25-20 / Page 21
Table 25-20.7: Lower Finish Panels, RH ..... 25-20 / Page 25

Cargo Compartment

Figure 25-50.1: Cargo Net ..... 25-50 / Page 1
Table 25-50.1: Cargo Net ..... 25-50 / Page 2
Figure 25-50.2: Cargo Floor ..... 25-50 / Page 3
Table 25-50.2: Cargo Floor ..... 25-50 / Page 4
Figure 25-50.3: Aft Finish Panel ..... 25-50 / Page 5
Table 25-50.3: Aft Finish Panel ..... 25-50 / Page 6

ELT Installation

Figure 25-60.1: ELT Installation ..... 25-60 / Page 1
Table 25-60.1: ELT Installation ..... 25-60 / Page 3

Insulation

Figure 25-80.1: Insulation ..... 25-80 / Page 1
Table 25-80.1: Insulation ..... 25-80 / Page 3

Flight Compartment

Figure 25-10.1: Crew Seats

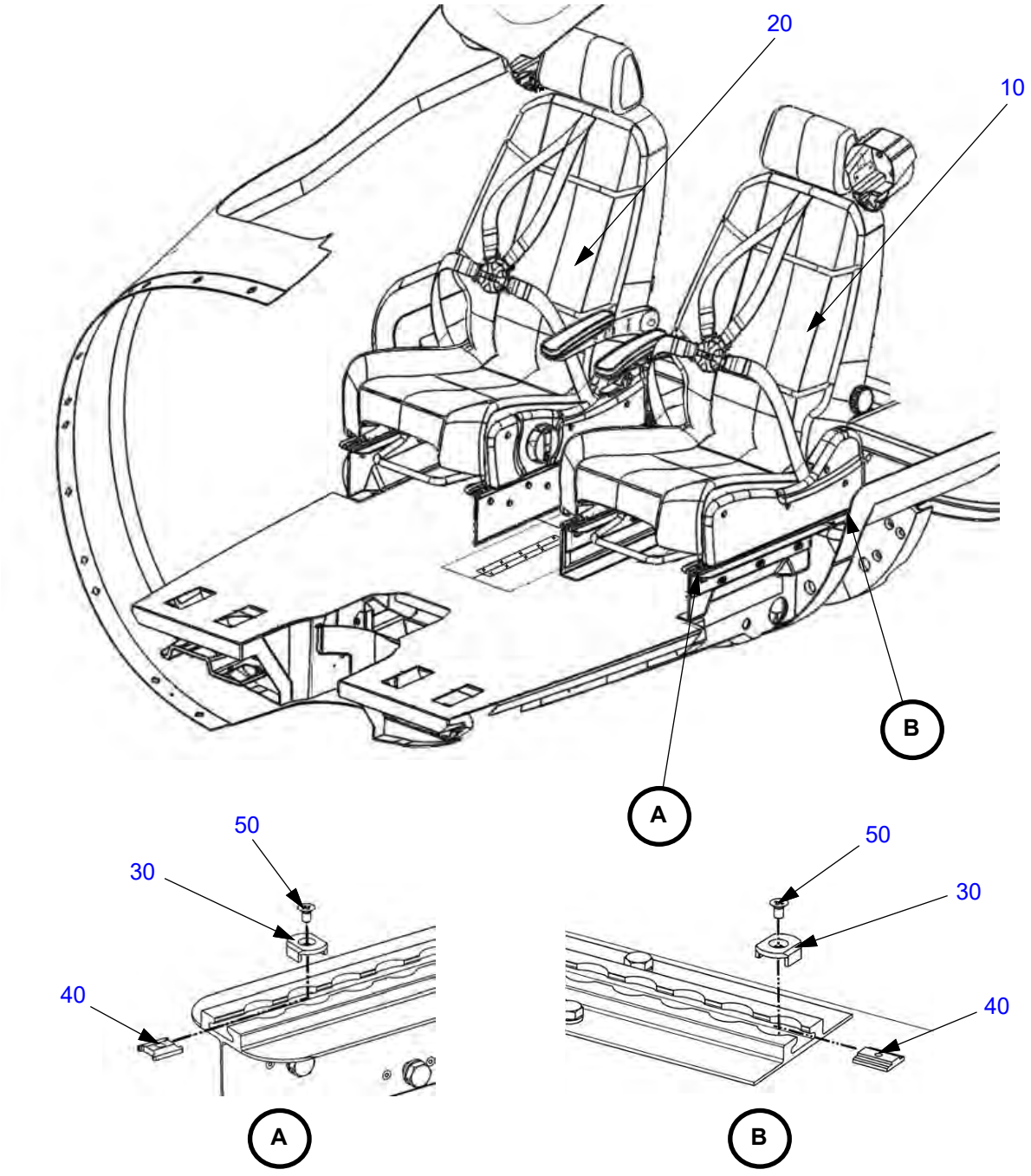

Table 25-10.1: Crew Seats

Figure Item Number	Part Number	Part Name	Effectivity Code	Amount in Assy.
10*	2041-2510101-021	Seat, Co-Pilot	K003 and On	1
*	2041-2510101-023	Seat, Pilot, No Armrests	K003 and On	1
20*	2041-2510101-022	Seat, Co-Pilot	K003 and On	1
*	2041-2510101-024	Seat, Co-Pilot, No Armrests	K003 and On	1
30	MCDS206-105	Retainer	K003 and On	4
40	MCDS206-103	Stud	K003 and On	4
50	NAS514P832-4B	Screw, Machine, C'sunk Ø .164 x 1/4	K003 and On	4

* Optional Part Numbers (Refer to Millennium CMM/IPC document number: 2041-CMM022)

Figure 25-10.2: Pedestal Finish Panels

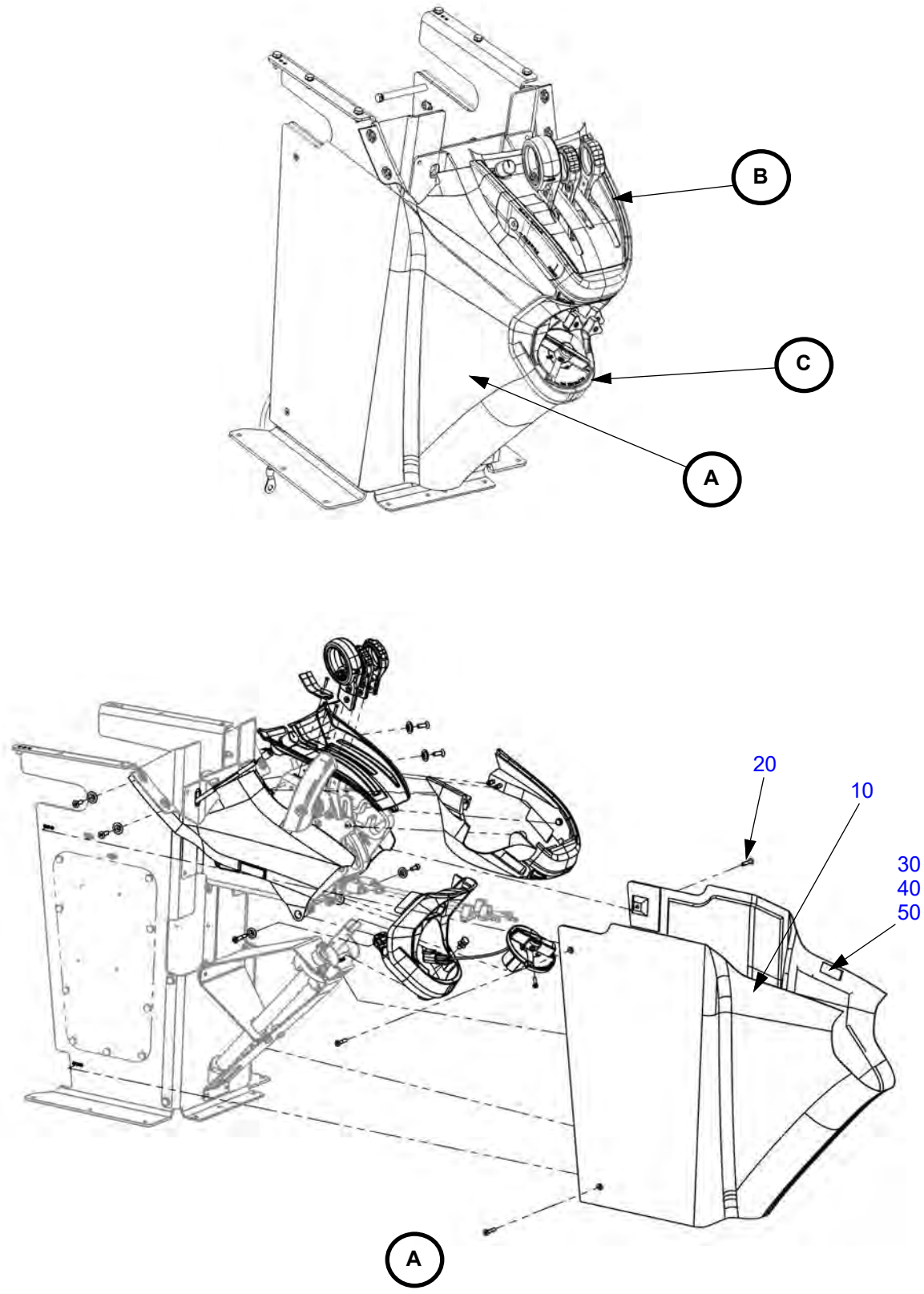

Figure 25-10.2: Pedestal Finish Panels (Continued)

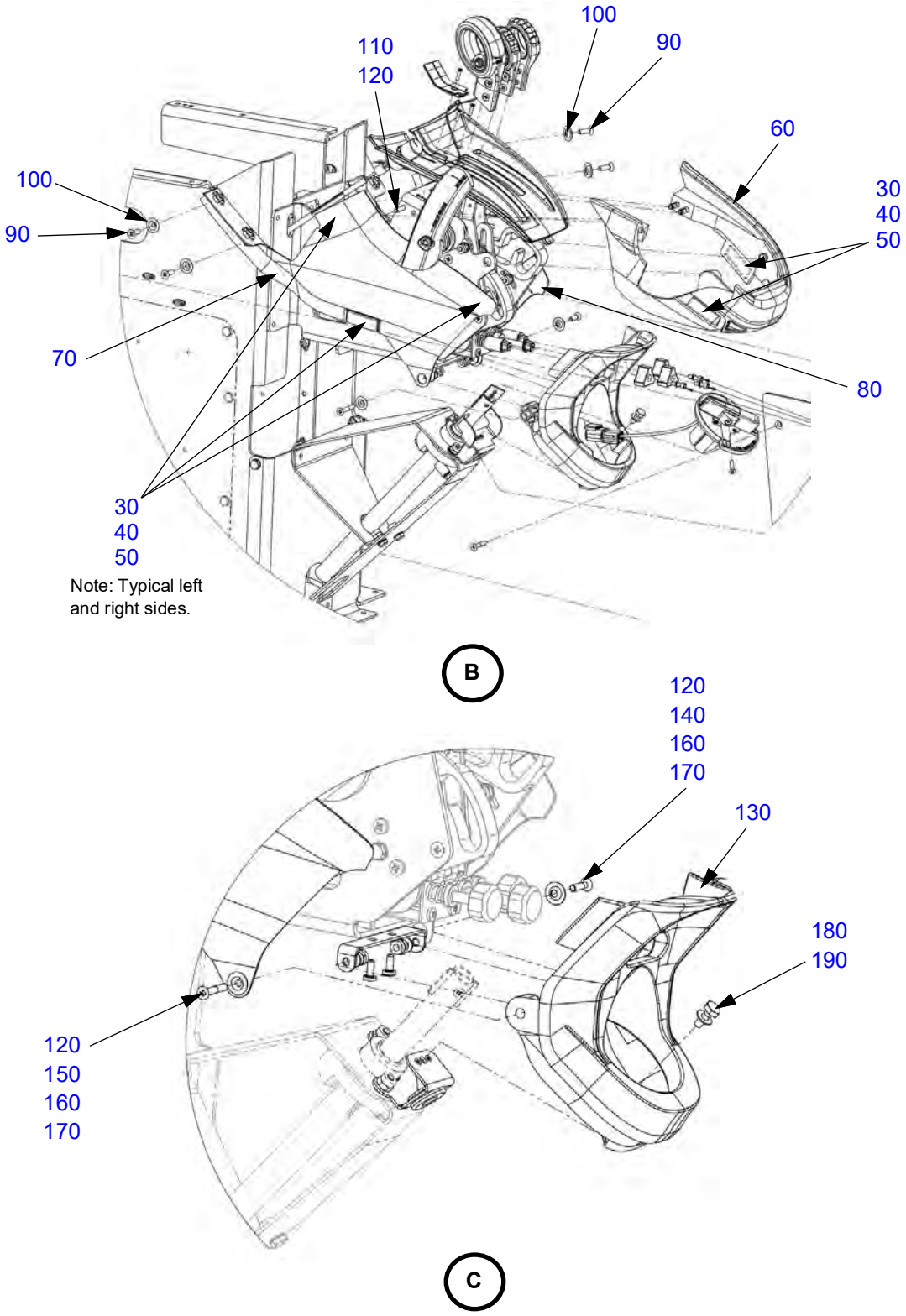

Table 25-10.2: Pedestal Finish Panels

Figure Item Number	Part Number	Part Name	Effectivity Code	Amount in Assy.
10	PK25121205	Pedestal Panel Assembly, IP	K003 and On	1
20	MS24694-S10	Screw, Machine, C'sunk Ø .164 x 27/32	K003 and On	4
*30	SJ3562	1/2 “ Dual Lock Type 170	K003 and On	A/R
*40	SJ3560	1/2 “ Dual Lock Type 250	K003 and On	A/R
*50	SJ3561	1/2 “ Dual Lock Type 400	K003 and On	A/R
60	PK25121201	Power Quad Surround, IP	K003 and On	1
70	PK25121203	Power Quad Panel Assembly, LH, IP	K003 and On	1
80	PK25121202	Power Quad Trim Assembly, RH, IP	K003 and On	1
90	MS24694-S51	Screw, Machine, C'sunk Ø .190 x 19/32	K003 and On	4
100	NAS1169C10L	Washer, Dimpled, CRES No. 10 x .016	K003 and On	4
110	NAS1352-08-12P	Screw, Socket Head .164-32 x .750	K003 and On	4
120	NAS1149FN832P	Washer, Flat #8 x .032	K003 and On	6
130	PK25121204	Fuel Selector Cover Panel, IP	K003 and On	1
140	MS24694-S6	Screw, Machine, C'sunk Ø .164 x 19/32	K003 and On	1
150	MS24694-S13	Screw, Machine, C'sunk Ø .164 x 1-1/32	K003 and On	1
160	NAS1169C8L	Washer, Dimpled, CRES No. 8 x .016	K003 and On	2
170	MS21045L08	Nut, Self-locking, Steel .164-32	K003 and On	2
180	AN3-4A	Bolt, 10-32 x 17/32" Undrilled	K003 and On	1
190	NAS1149F0332P	Washer, Flat #10 x .032	K003 and On	1

* Note: Any of the listed Dual Lock fastener stem counts can be used. To ensure proper strength, the two mating surfaces should be different stem counts.

Figure 25-10.3: Instrument Panel Switch Bezels

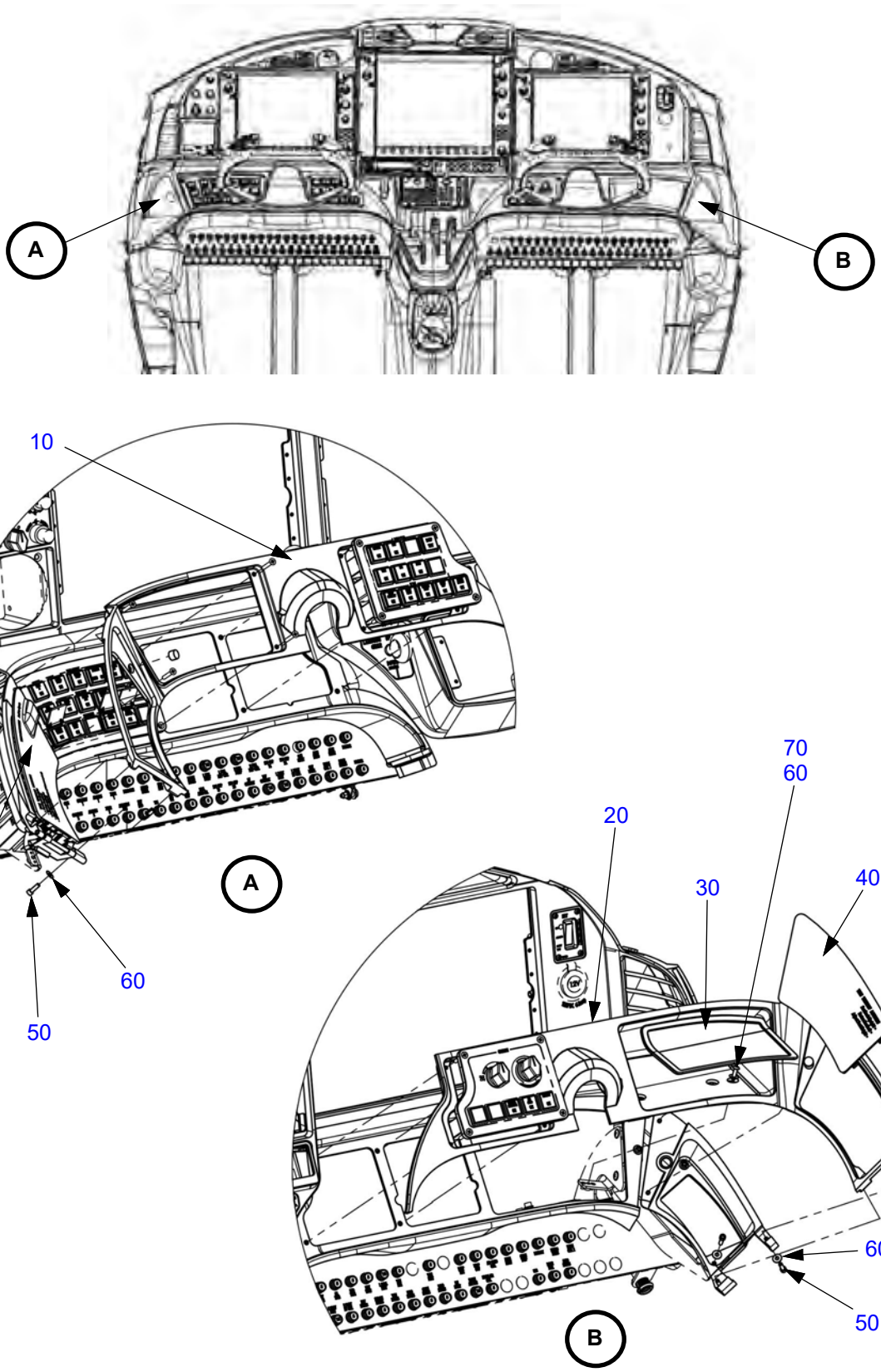

Table 25-10.3: Instrument Panel Switch Bezels

Figure Item Number	Part Number	Part Name	Effectivity Code	Amount in Assy.
10	PK25121005	Switch Bezels, LH, IP	K003 and On	1
20	PK25121004	Switch Bezels, RH, IP	K003 and On	1
30	PK25121032	Ip Pocket Traction Mat, RH	K003 and On	1
40	AK25121033	Cover Assy, Snap-in, Far Side of IP	K003 and On	1
50	NAS1352-06-7P	Screw, Socket Head .138-32 x .438	K003 and On	8
60	NAS1149FN616P	Washer, Flat #6 x .016	K003 and On	9
70	NAS601-8P	Screw, Machine, Pan Head, .138-32 x .500 Lg.	K003 and On	1
80	AK25121100	Test Switch Door Assy, LH	K003 and On	1

Figure 25-10.4: Carpet

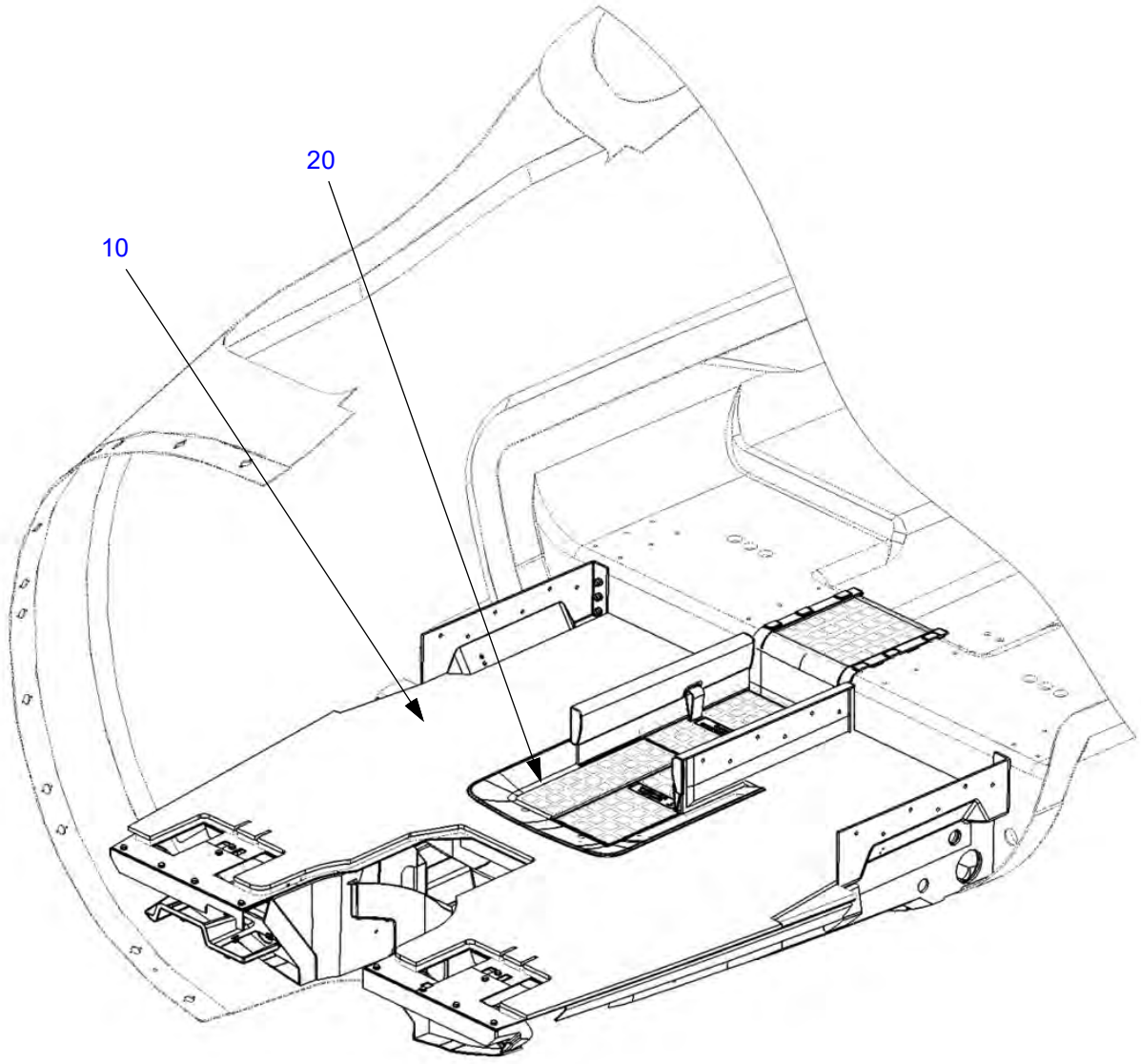

Table 25-10.4: Carpet

Figure Item Number	Part Number	Part Name	Effectivity Code	Amount in Assy.
10	PK25130001	Carpet, Crew	K003 and On	1
20	PK25130005	Panel, C Trim Ring	K003 and On	1

Figure 25-10.5: Crew Finish Panels, RH

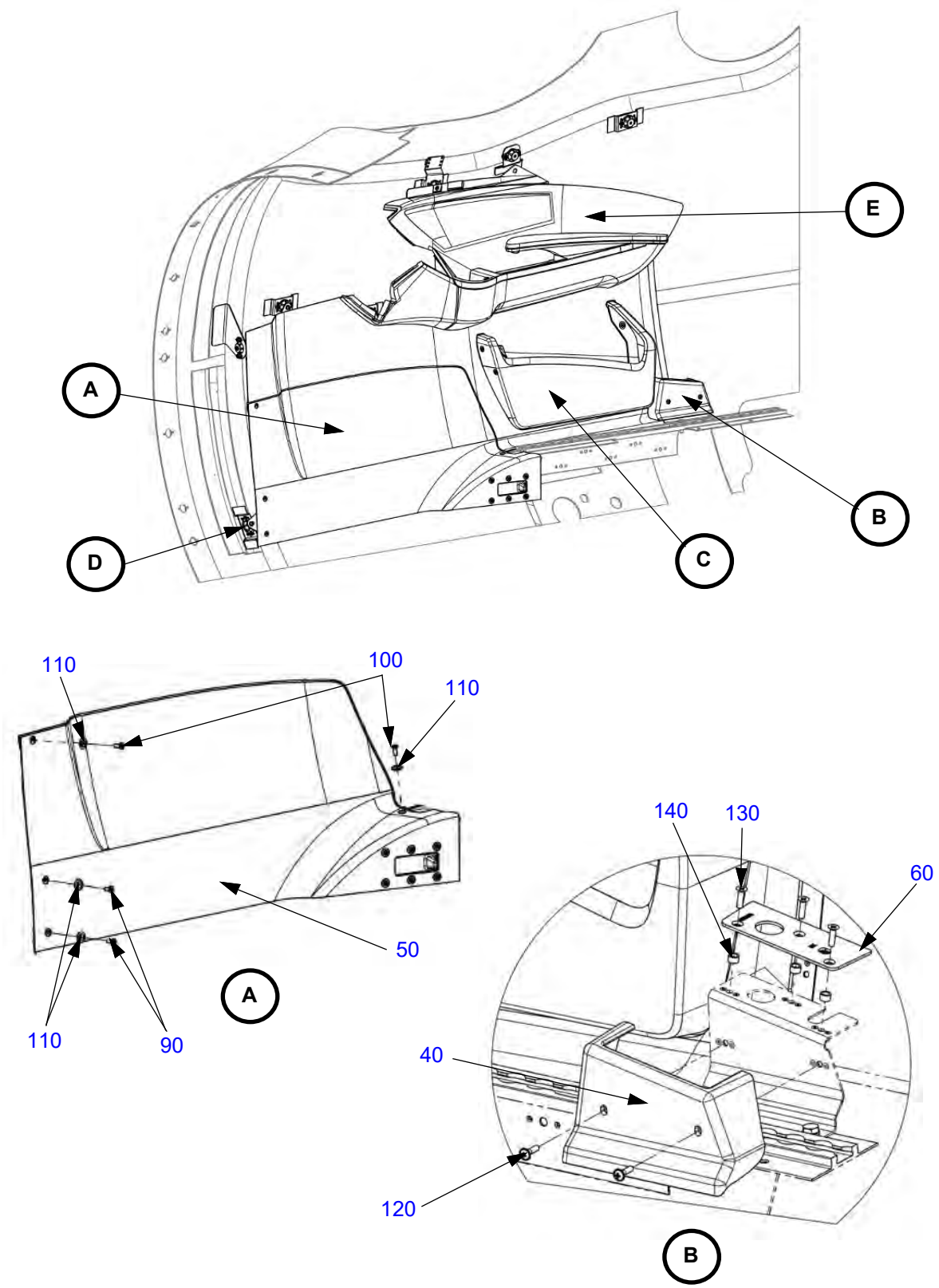

Figure 25-10.5: Crew Finish Panels, RH (Continued)

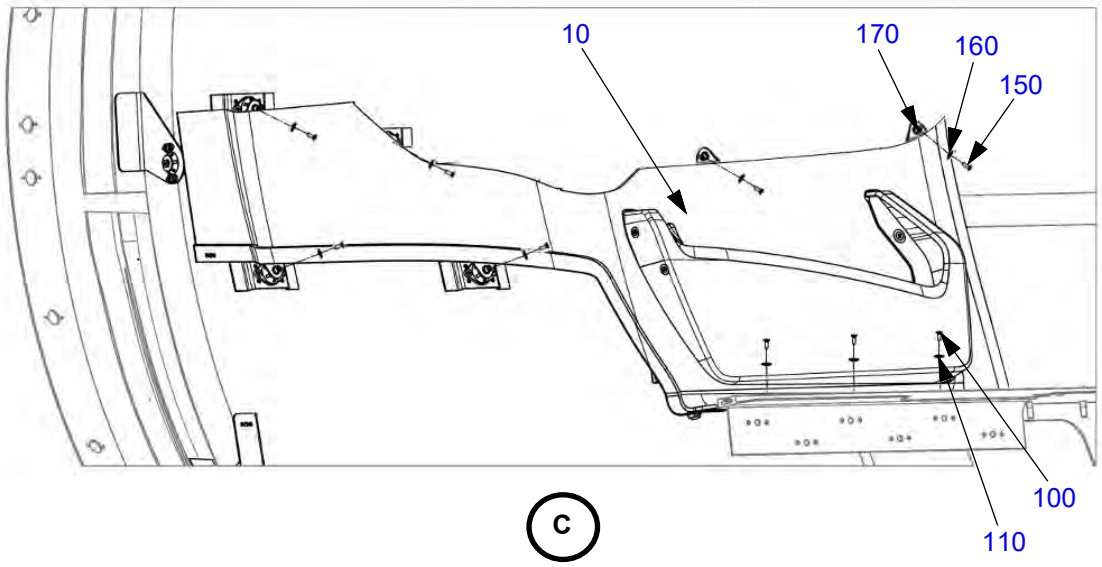

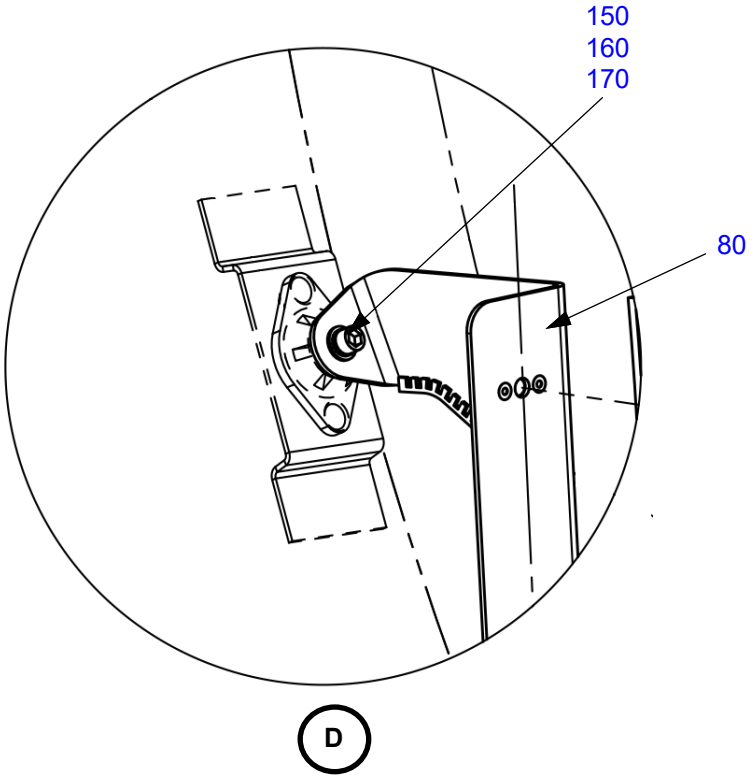

Figure 25-10.5: Crew Finish Panels, RH (Continued)

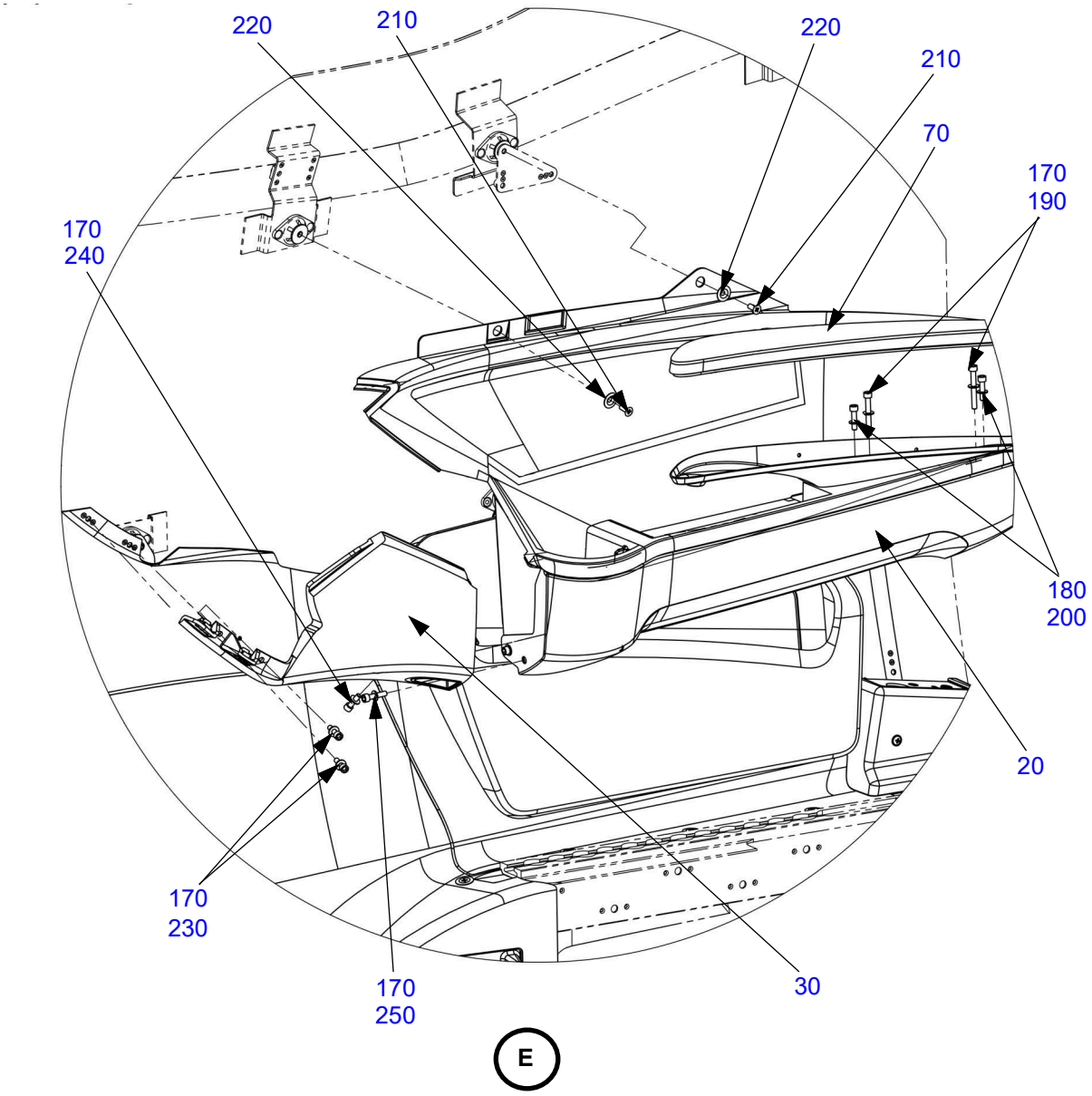

Table 25-10.5: Crew Finish Panels, RH

Figure Item Number	Part Number	Part Name	Effectivity Code	Amount in Assy.
10	AK25122030	Panel Assy, Kick, RH	K003 and On	1
20	AK25122200	Armrest Assembly, RH, Side Panels	K003 and On	1
30	AK25122112	Fwd Panel Assembly, RH, Armrest	K003 and On	1
40	PK25122032	Cover Panel, Oxygen and Mic Jacks, RH	K003 and On	1
50	AK25122012 A	Cover Assy, Kick Panel, RH	K003 - K006	1
	AK25122012 B	Cover Assy, Kick Panel, RH	K007 and On	1
60	AK25122034	Assy, Cover Plate, Oxygen and Mic Jacks, RH	K003 and On	1
70	AK25122102	Pad Assembly, RH, Armrest	K003 and On	1
80	AK25122024	Bracket Assy, Kick Panel, Fwd Attach, RH	K003 and On	1
90	MS24694-S49	Screw, Machine, C'sunk Ø .190 x 15/32	K003 and On	2
100	MS24694-S50	Screw, Machine, C'sunk Ø .190 x 17/32	K003 and On	5
110	NAS1169C10L	Washer, Dimpled, CRES No. 10 x .016	K003 and On	7
120	AN525-832R10	Screw, Washer Head, .164 x .625 Lg.	K003 and On	2
130	MS24693-51B	Screw, Machine, C'sunk, Blk Oxide Ø .164 x 0.625	K003 and On	3
140	NAS43DD3-12N	Spacer, Aluminum .214 ID x .312 OD x .188	K003 and On	3
150	NAS1352-08-10P	Screw, Socket Head .164-32 x .625	K003 and On	6
160	MS35338-42	Washer, Lock-spring, Ø.164	K003 and On	6
170	NAS1149FN832P	Washer, Flat #8 x .032	K003 and On	11
180	NAS1352-08-11P	Screw, Socket Head .164-32 x .688	K003 and On	2
190	NAS1352-08-22P	Screw, Socket Head .164-32 x 1.375	K003 and On	2

Figure Item Number	Part Number	Part Name	Effectivity Code	Amount in Assy.
200	NAS620C10L	Washer, Reduced OD, CRES, .195 ID x .354 OD	K003 and On	3
210	MS24693-S49	Screw, Machine, C'sunk Ø .164 x 0.437	K003 and On	2
220	NAS1169C8L	Washer, Dimpled, CRES No. 8 x .016	K003 and On	2
230	NAS1352-08-10P	Screw, Socket Head .164-32 x .625	K003 and On	2
240	NAS1352-08-19P	Screw, Socket Head .164-32 x .563	K003 and On	1
250	NAS1352-08-12P	Screw, Socket Head .164-32 x .750	K003 and On	1

Figure 25-10.6: Crew Finish Panels, LH

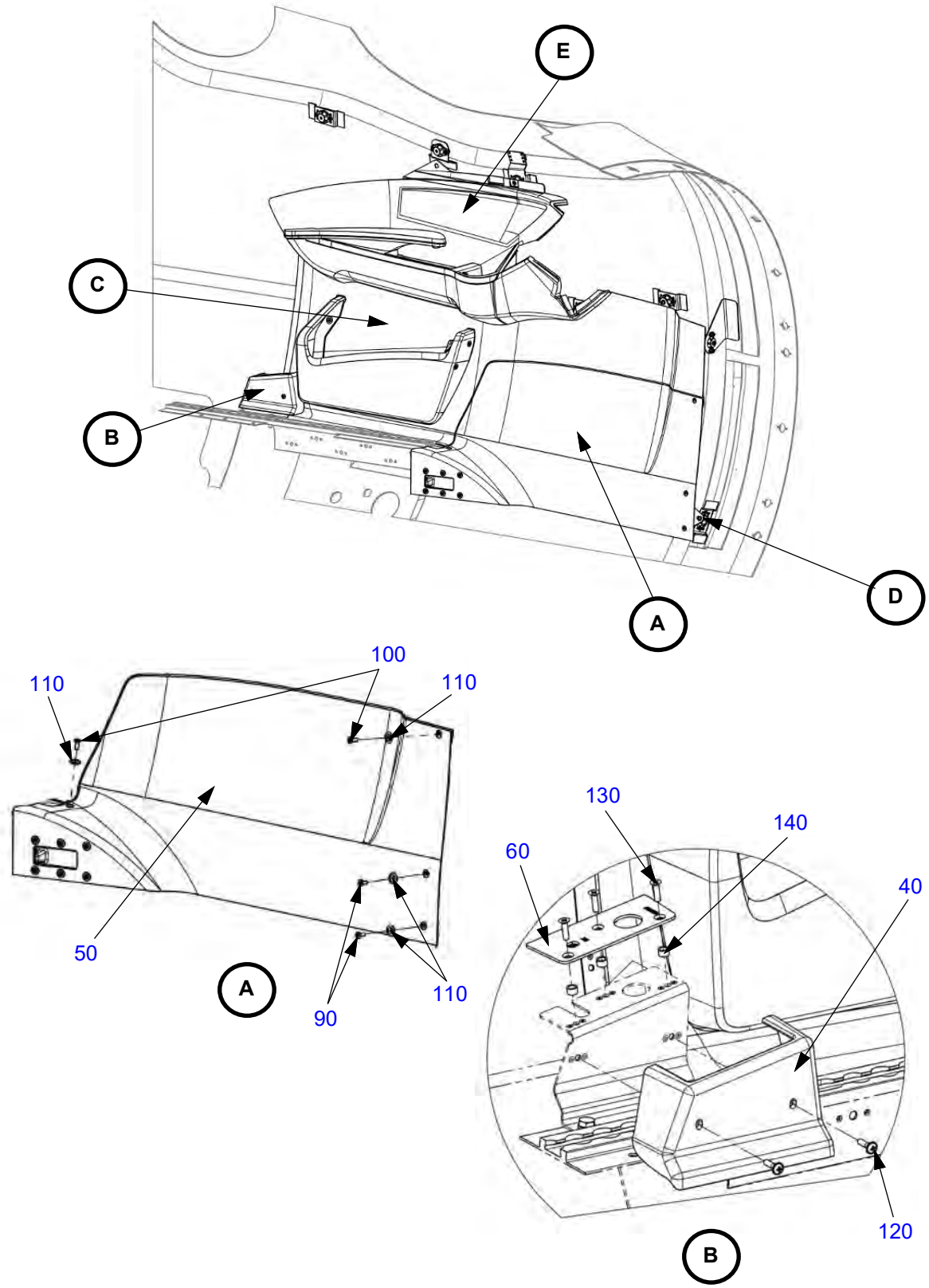

Figure 25-10.6: Crew Finish Panels, LH (Continued)

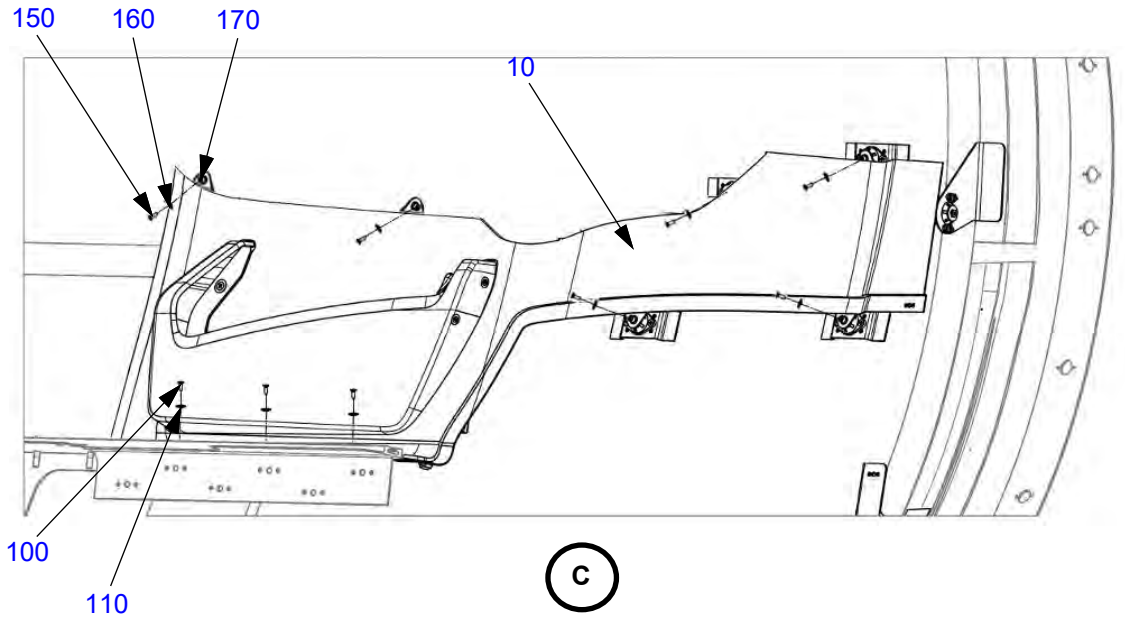

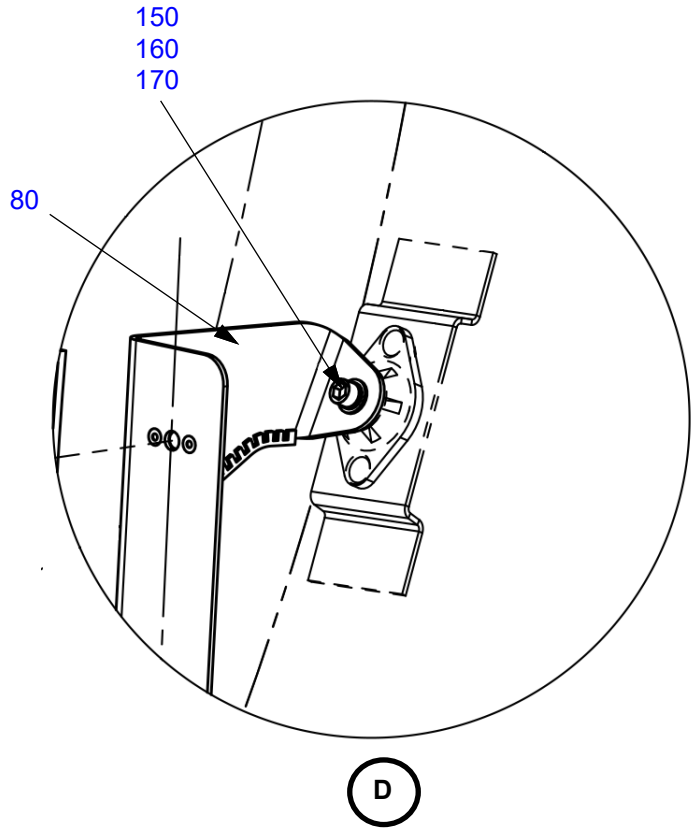

Figure 25-10.6: Crew Finish Panels, LH (Continued)

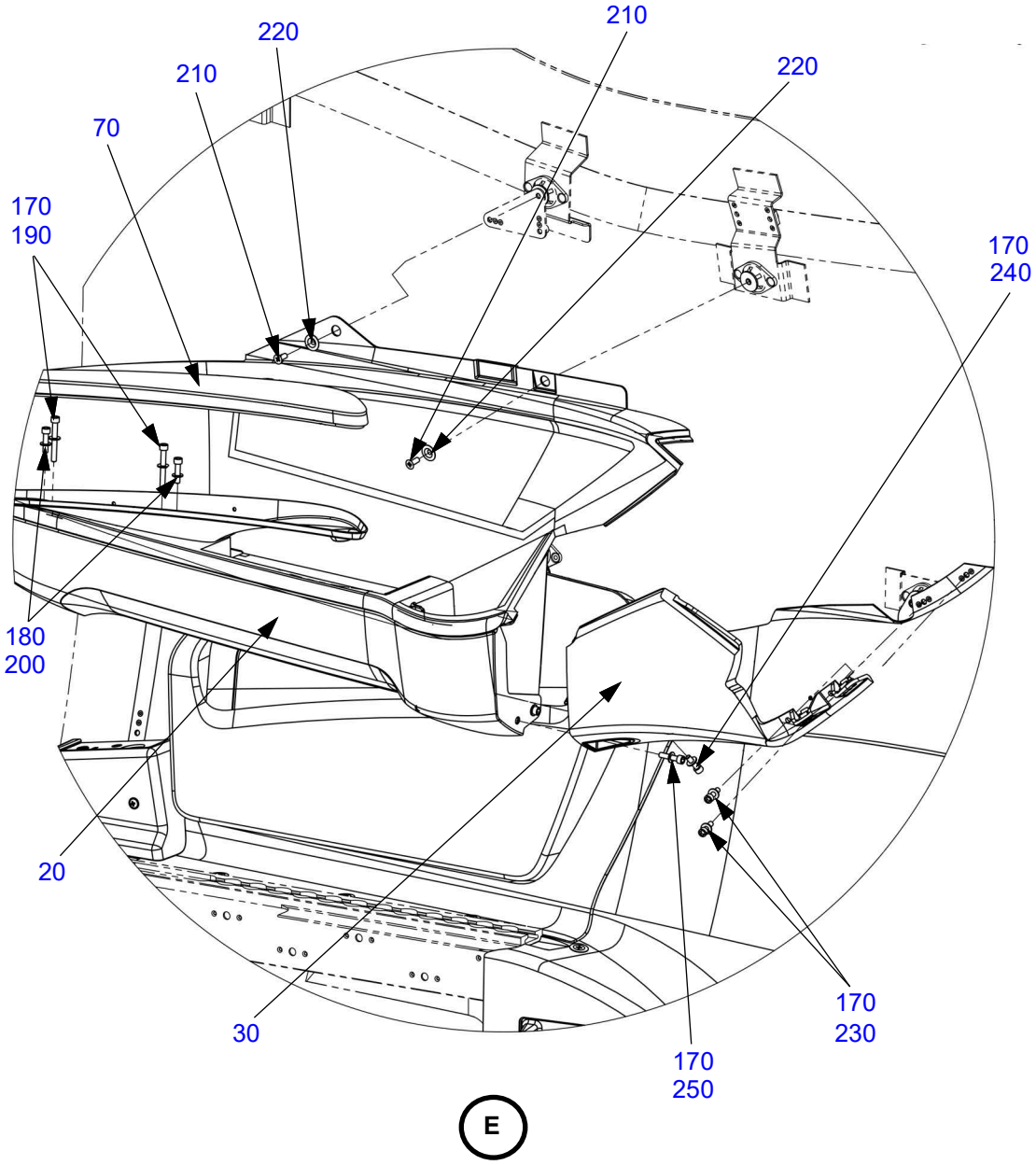

Table 25-10.6: Crew Finish Panels, LH

Figure Item Number	Part Number	Part Name	Effectivity Code	Amount in Assy.
10	AK25122029	Panel Assy, Kick, LH	K003 and On	1
20	AK25122100	Armrest Assembly, LH, Crew Side Panels	K003 and On	1
30	AK25122111	Fwd Panel Assembly, LH, Armrest	K003 and On	1
40	PK25122031	Cover Panel, Oxygen And Mic Jacks, LH	K003 and On	1
50	AK25122011 A	Cover Assy, Kick Panel, LH	K003 - K006	1
	AK25122011 B	Cover Assy, Kick Panel, LH	K007 and On	1
60	AK25122033	Assy, Cover Plate, Oxygen And Mic Jacks, LH	K003 and On	1
70	AK25122101	Pad Assembly, LH, Armrest	K003 and On	1
80	AK25122027	Assy, Bracket, Kick Panel, Fwd Attach, LH	K003 and On	1
90	MS24694-S49	Screw, Machine, C'sunk Ø .190 x 15/32	K003 and On	2
100	MS24694-S50	Screw, Machine, C'sunk Ø .190 x 17/32	K003 and On	5
110	NAS1169C10L	Washer, Dimpled, CRES No. 10 x .016	K003 and On	7
120	AN525-832R10	Screw, Washer Head, .164 x .625 Lg.	K003 and On	2
130	MS24693-51B	Screw, Machine, C'sunk, Blk Oxide Ø .164 x 0.625	K003 and On	3
140	NAS43DD3-12N	Spacer, Aluminum .214 ID x .312 OD x .188	K003 and On	3
150	NAS1352-08-10P	Screw, Socket Head .164-32 x .625	K003 and On	6
160	MS35338-42	Washer, Lock-spring, Ø.164	K003 and On	6
170	NAS1149FN832P	Washer, Flat #8 x .032	K003 and On	11
180	NAS1352-08-11P	Screw, Socket Head .164-32 x .688	K003 and On	2
190	NAS1352-08-22P	Screw, Socket Head .164-32 x 1.375	K003 and On	2

Figure Item Number	Part Number	Part Name	Effectivity Code	Amount in Assy.
200	NAS620C10L	Washer, Reduced OD, CRES, .195 ID x .354 OD	K003 and On	3
210	MS24693-S49	Screw, Machine, C'sunk Ø .164 x 0.437	K003 and On	2
220	NAS1169C8L	Washer, Dimpled, CRES No. 8 x .016	K003 and On	2
230	NAS1352-08-10P	Screw, Socket Head .164-32 x .625	K003 and On	2
240	NAS1352-08-19P	Screw, Socket Head .164-32 x .563	K003 and On	1
250	NAS1352-12-11P	Screw, Socket Head .164-32 x .750	K003 and On	1

Figure 25-10.7: Glare Shield

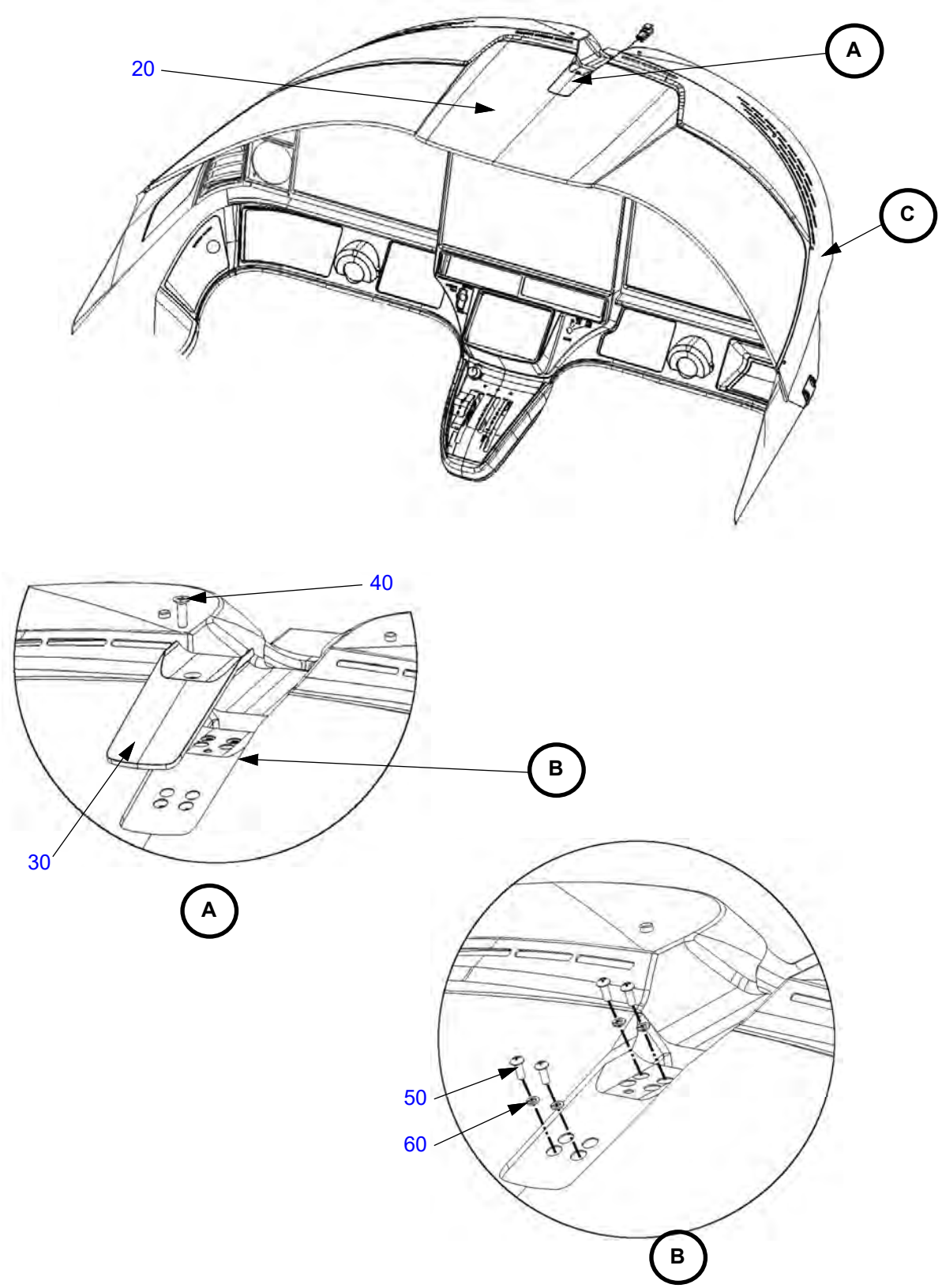

Figure 25-10.7: Glare Shield (Continued)

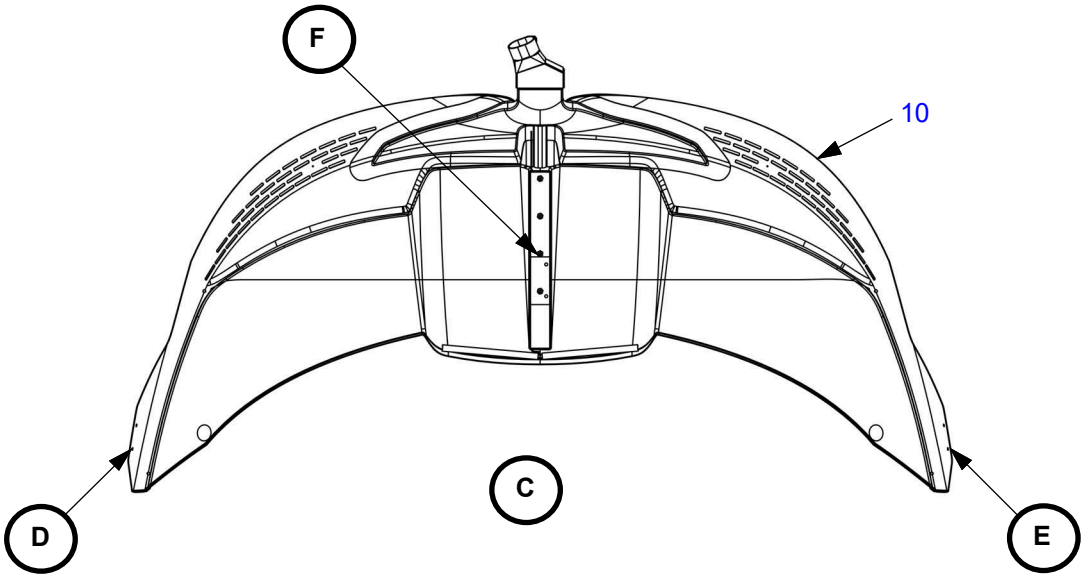

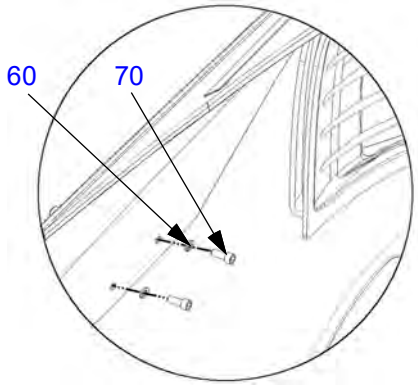

D

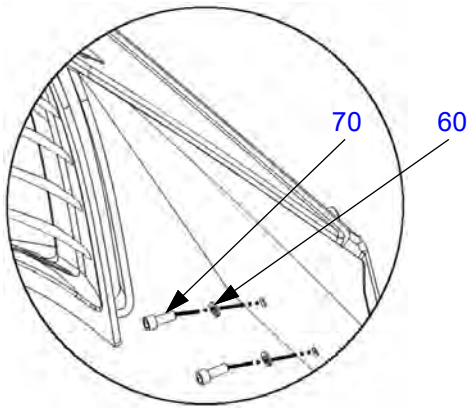

E

Figure 25-10.7: Glare Shield (Continued)

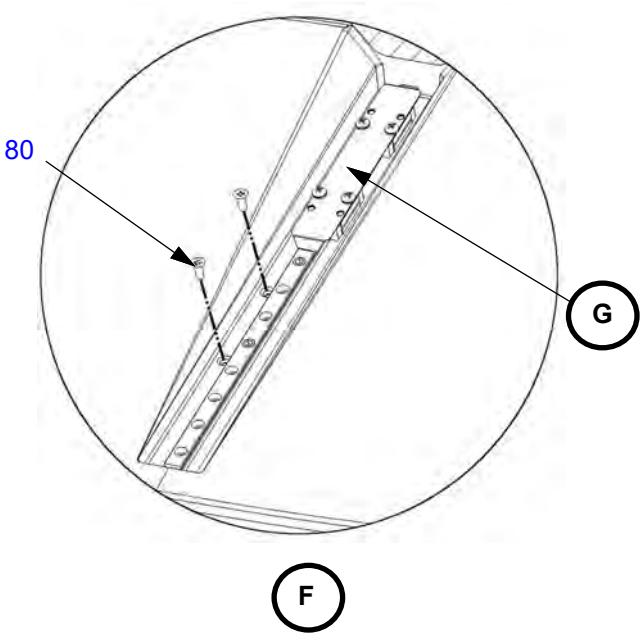

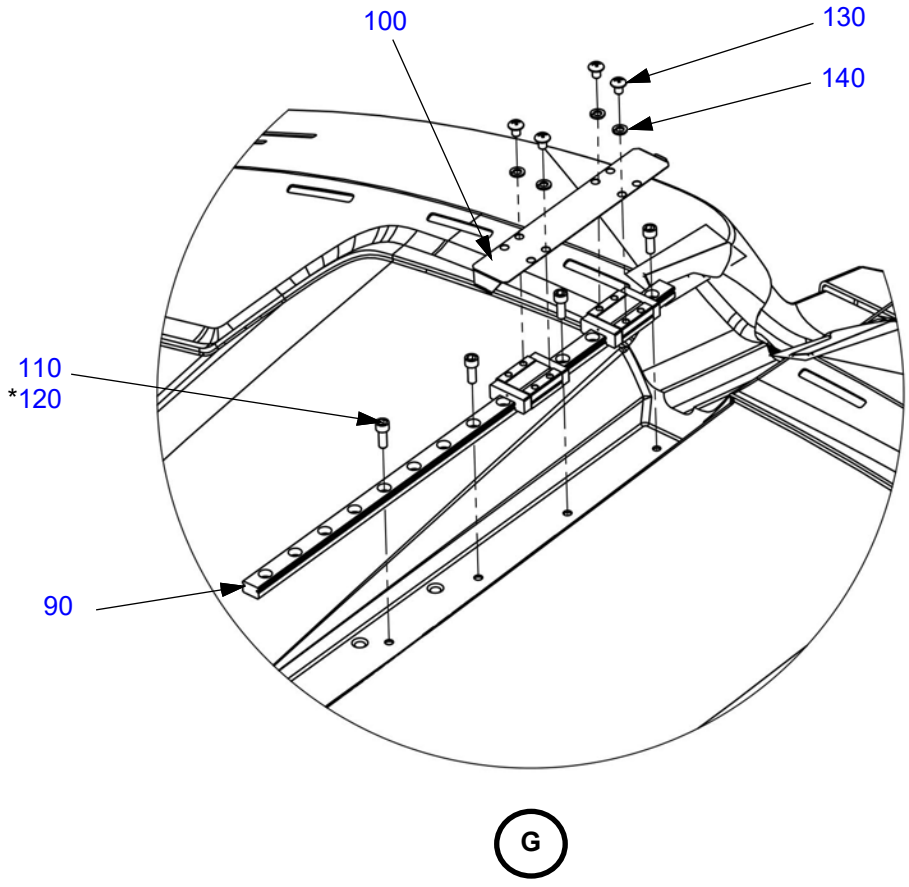

*Item not illustrated.

Table 25-10.7: Glare Shield

Figure Item Number	Part Number	Part Name	Effectivity Code	Amount in Assy.
10	AK25123000	Glare Shield Base Assembly	K003 and On	1
20	AK25123001	Slider Assy, Glare Shield	K003 and On	1
30	PK25123003	Fastener Cover, Glare Shield	K003 and On	1
40	MS24693-S73	Screw, Machine, C'sunk Ø .190 x 0.625	K003 and On	1
50	NAS601-6P	Screw, Machine, Pan Head, .138-32 x .375 Lg.	K003 and On	4
60	MS35338-41	Washer, Lock-spring, Ø.138	K003 and On	8
70	NAS1352-06-6P	Screw, Socket Head .138-32 x .375	K003 and On	4
80	MS24693-S26	Screw, Machine, C'sunk Ø .138 x 0.375	K003 and On	2
90	PK99007097	Guide Rail & Carriage Assy, Glare Shield	K003 and On	1
100	PK25123006	Spring, Flat	K003 and On	1
110	NAS1352-06-6P	Screw, Socket Head .138-32 x .375	K003 and On	4
120	MS21045L06	Nut, Self-locking, Steel .138-32	K003 and On	4
130	NAS601-3P	Screw, Machine, Pan Head, .138-32 x .190 Lg.	K003 and On	4
140	MS35338-41	Washer, Lock-spring, Ø.138	K003 and On	4

Figure 25-10.8: Overhead Panels

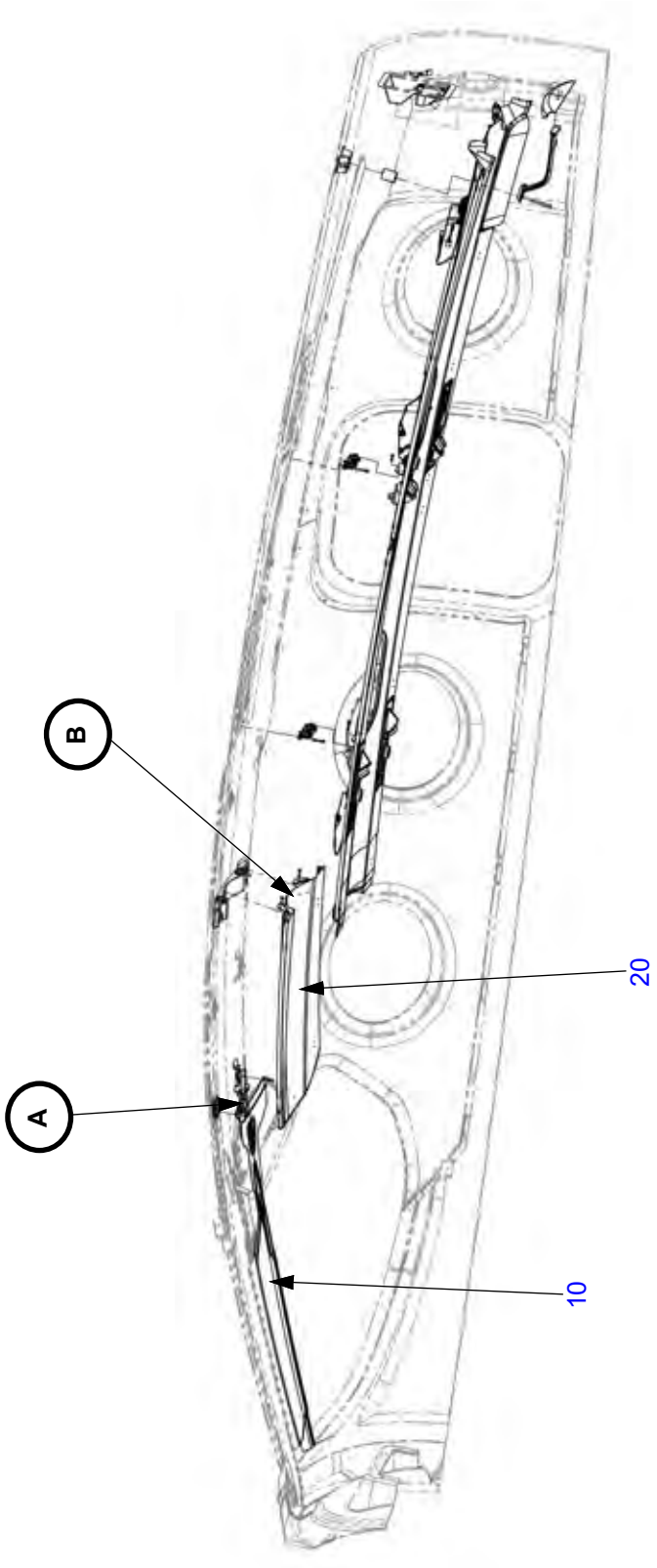

Figure 25-10.8: Overhead Panels (Continued)

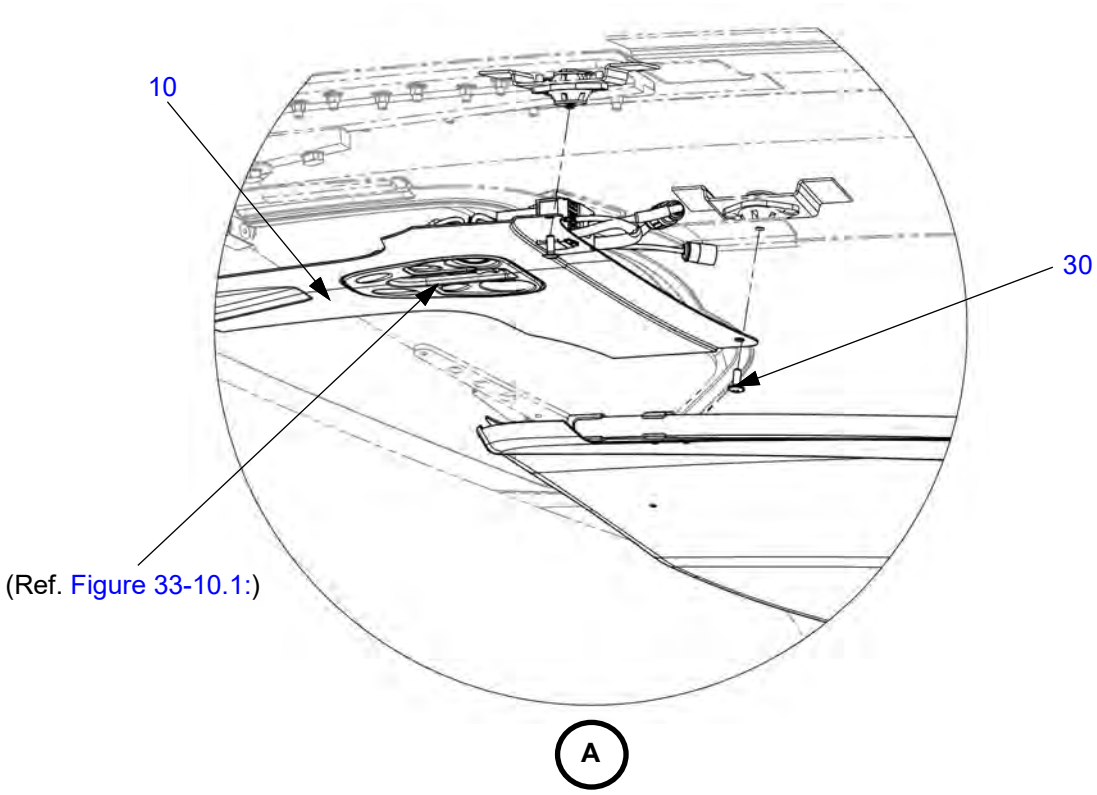

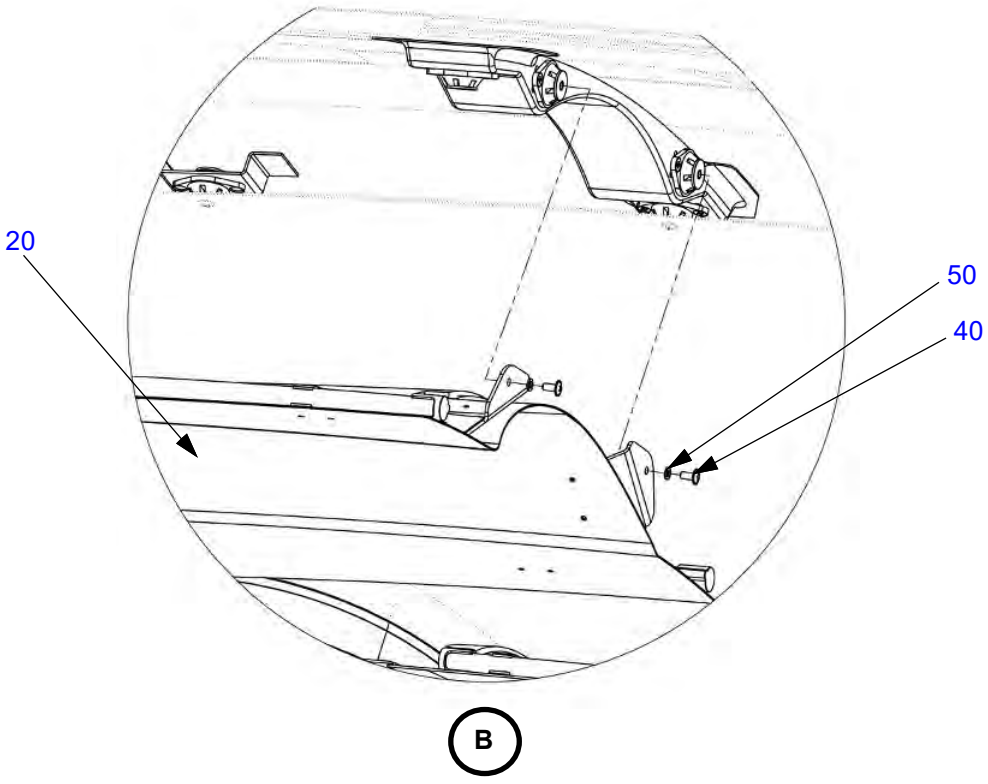

Table 25-10.8: Overhead Panels

Figure Item Number	Part Number	Part Name	Effectivity Code	Amount in Assy.
10	PK25223001	Panel, Center Post	K003 and On	1
20	AK25223501	Overhead Console, Fwd	K003 and On	1
30	AN525-832R7	Screw, Washer Head, .164 x .438 Lg.	K003 and On	2
40	AN525-832R6	Screw, Washer Head, .164 x .375 Lg.	K003 and On	2
50	MS35338-42	Washer, Lock-spring, Ø.164	K003 and On	2

Figure 25-10.9: Sunvisors and Grab Handle

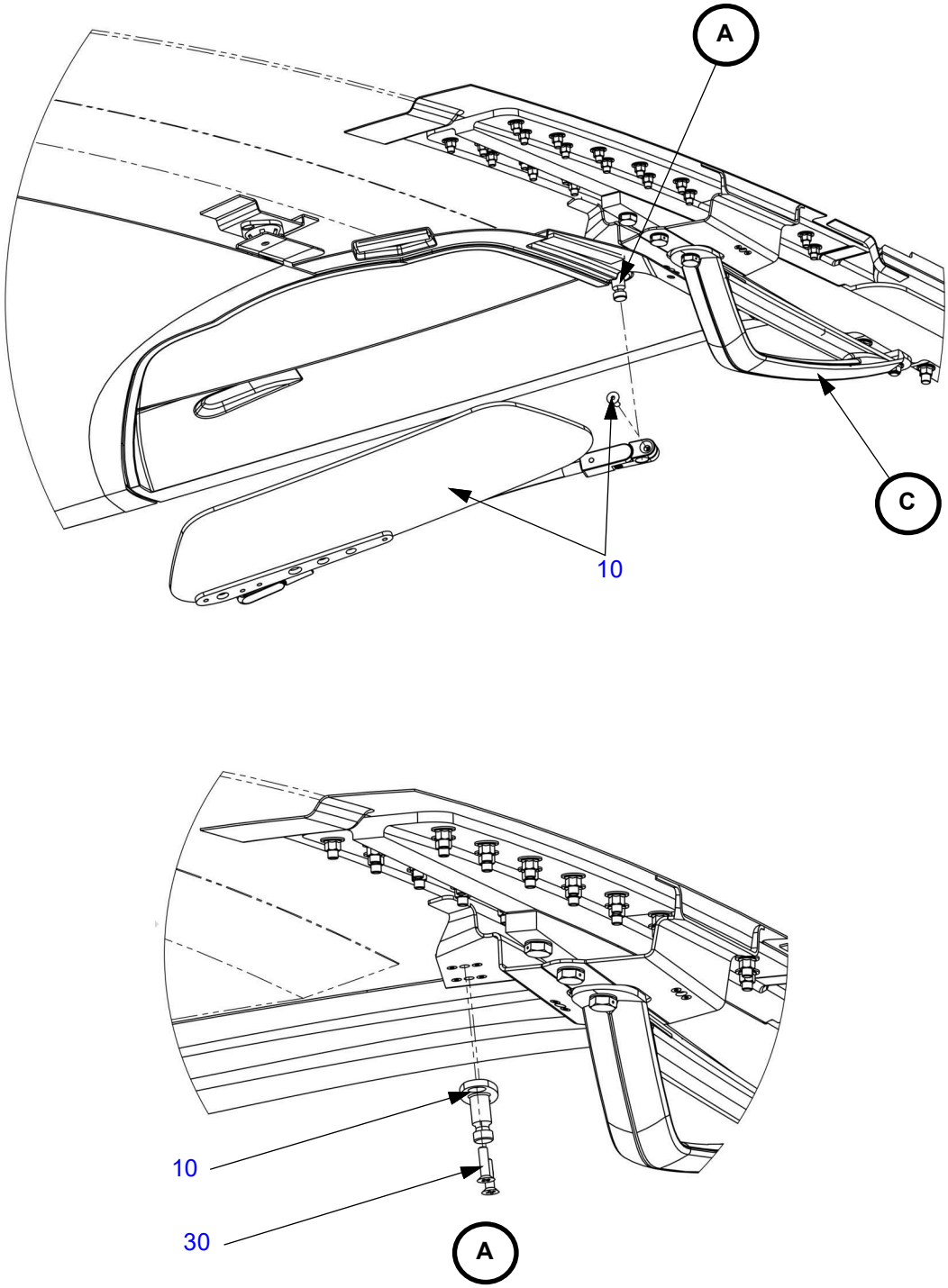

Figure 25-10.9: Sunvisors and Grab Handle (Continued)

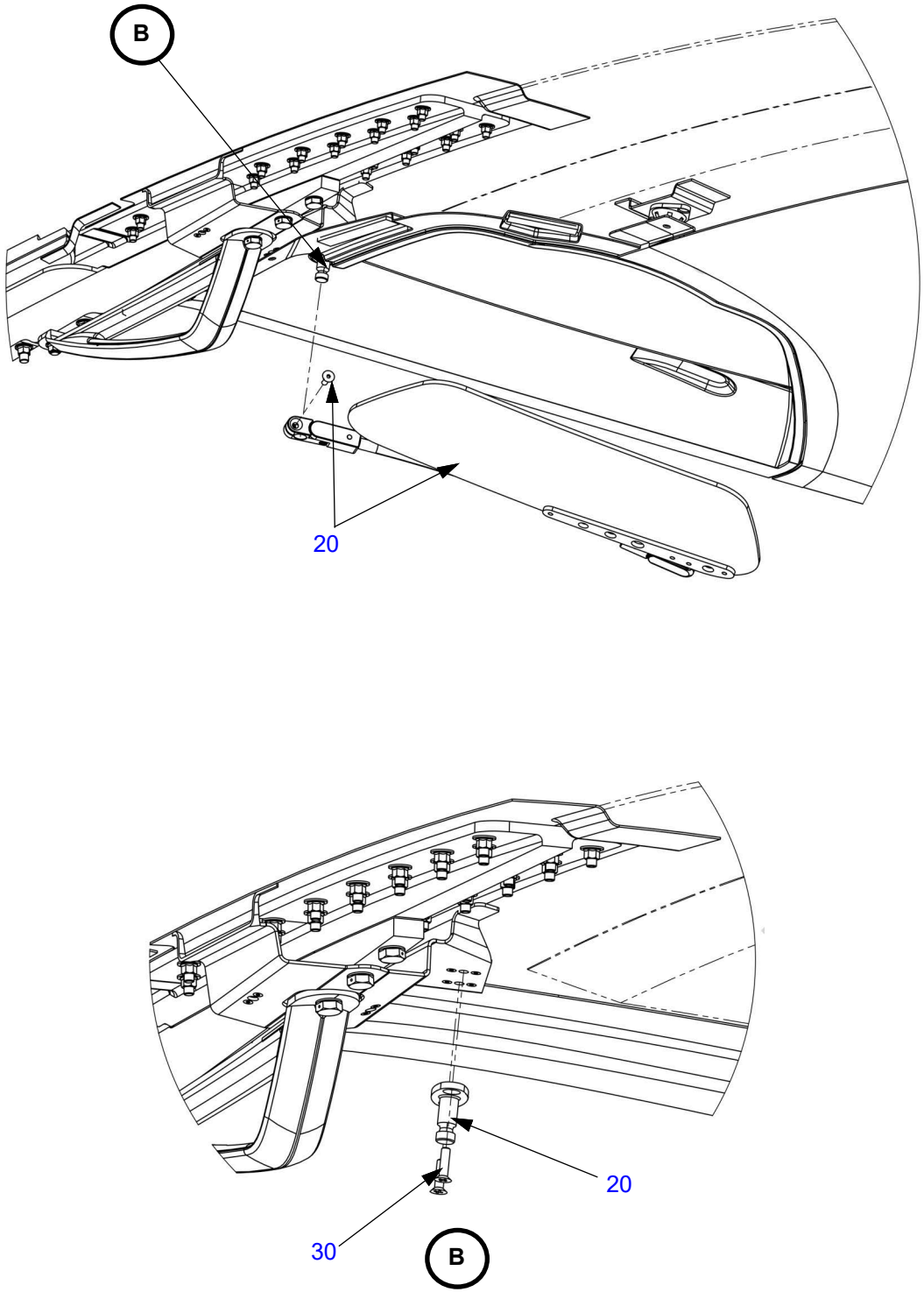

Figure 25-10.9: Sunvisors and Grab Handle (Continued)

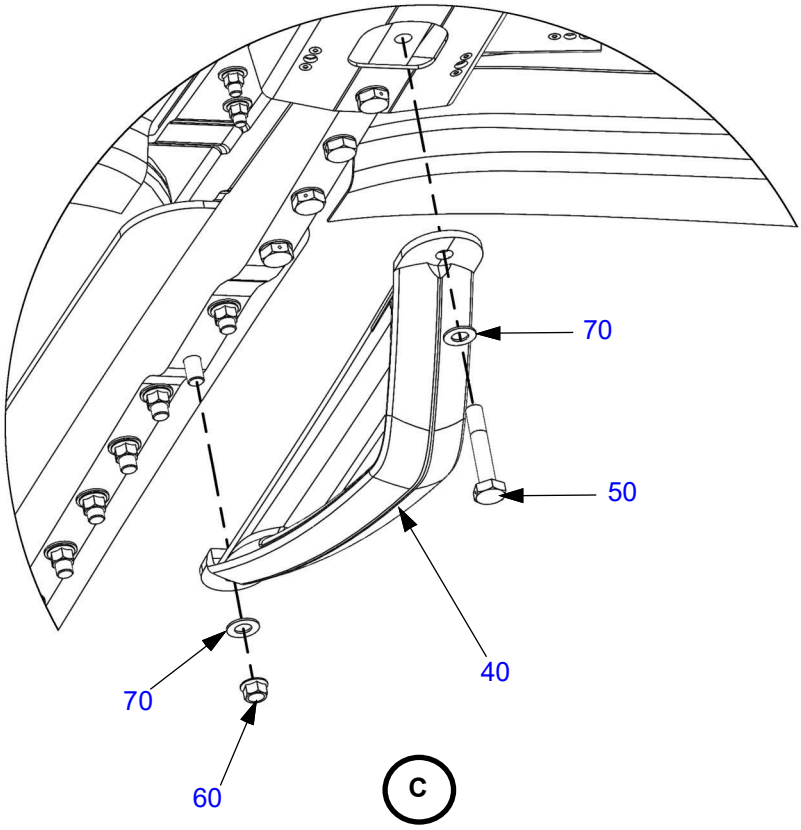

Table 25-10.9: Sunvisors and Grab Handle

Figure Item Number	Part Number	Part Name	Effectivity Code	Amount in Assy.
10	PK99007088	Sunvisor Assy, Pilot Side	K003 and On	1
20	PK99007089	Sunvisor Assy, Co-pilot Side	K003 and On	1
30	MS24693-51B	Screw, Machine, C'sunk, Blk Oxide Ø .164 x 0.625	K003 and On	4
40	AK56101000	Grab Handle Assy, Centerpost	K003 and On	1
50	AN4H15A	Bolt, 1/4-28 x 1-21/32" Drilled Head	K003 and On	1
60	MS21042L4	Nut, Self-locking, 450°, Reduced 1/4-28	K003 and On	1
70	NAS1149F0432P	Washer, Flat 1/4 x .032	K003 and On	2

Figure 25-10.10: Rudder Boots

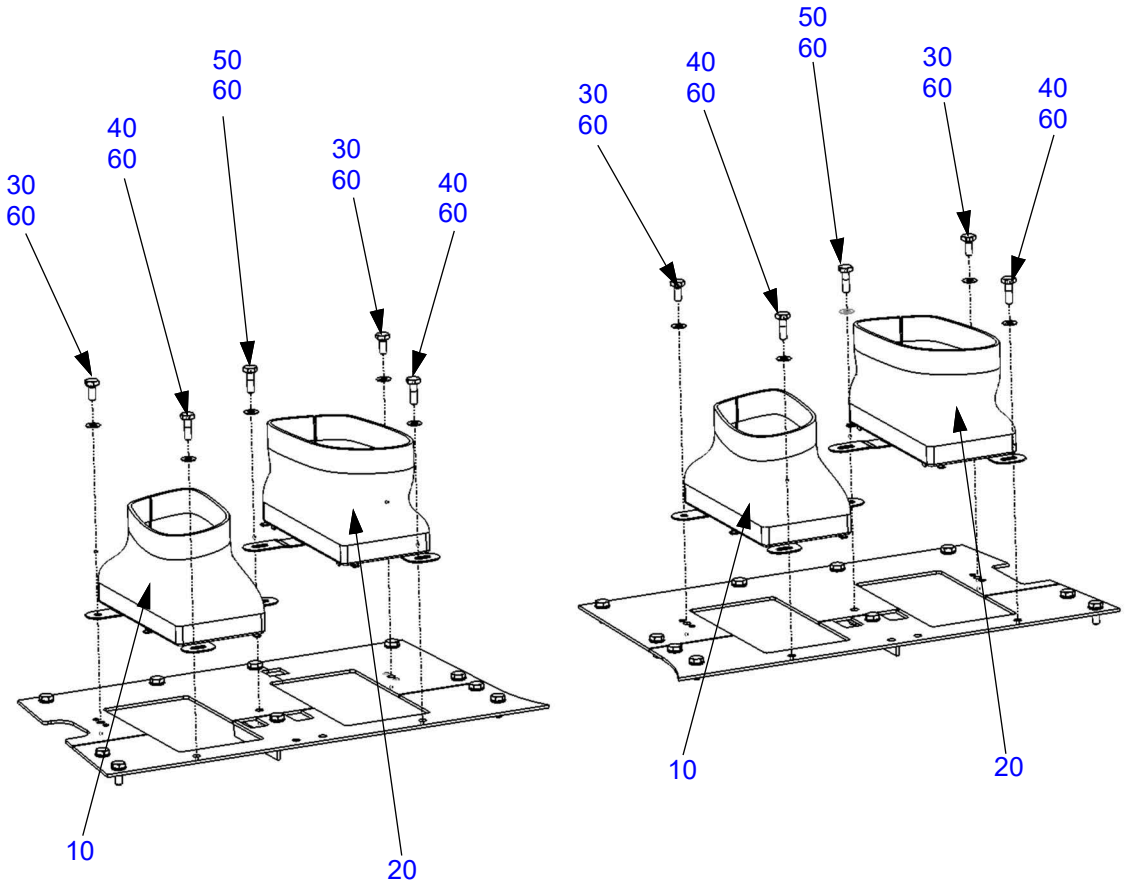

Table 25-10.10: Rudder Boots

Figure Item Number	Part Number	Part Name	Effectivity Code	Amount in Assy.
10	AK27202305	Boot, Left Foot, Rudder Pedal, Assembly	K003 and On	2
20	AK27202306	Boot, Right Foot, Rudder Pedal, Assembly	K003 and On	2
30	AN3-3A	Bolt, 10-32 x 15/32" Undrilled	K003 and On	4
40	AN3-4A	Bolt, 10-32 x 17/32" Undrilled	K003 and On	4
50	AN3-5A	Bolt, 10-32 x 21/32" Undrilled	K003 and On	2
60	NAS1149F0316P	Washer, Flat #10 x .016	K003 and On	10

Figure 25-10.11: Display Bezels

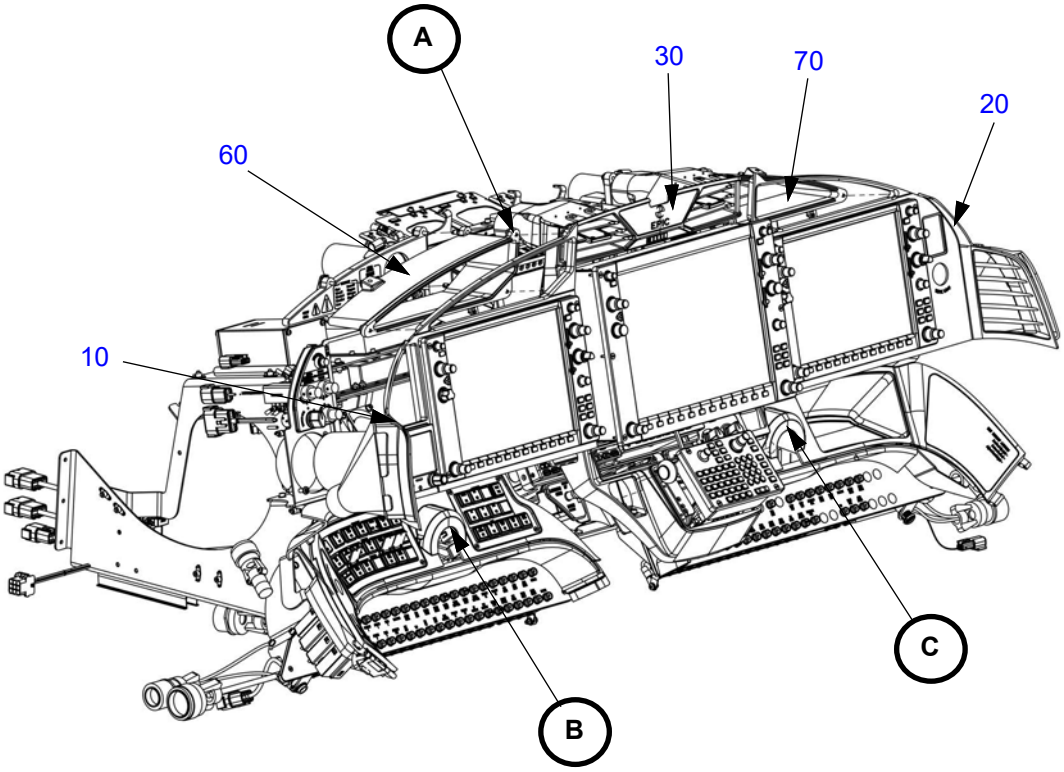

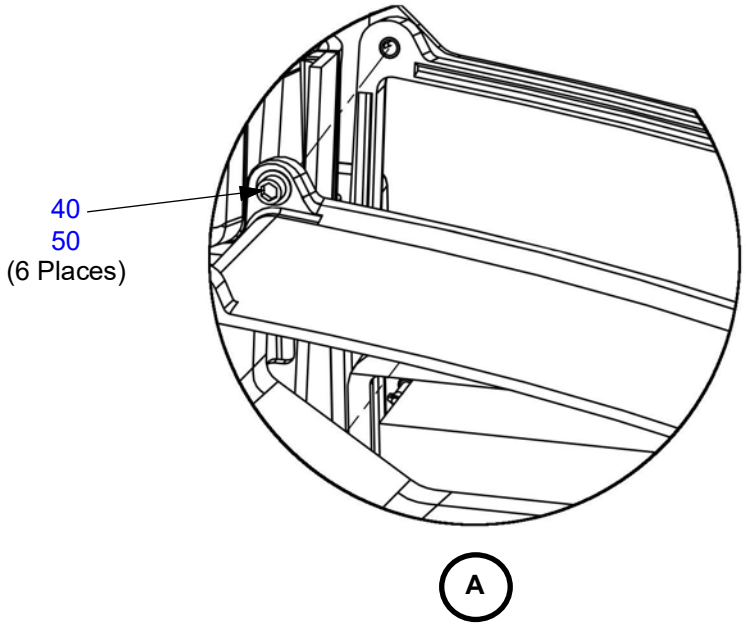

Figure 25-10.11: Display Bezels (Continued)

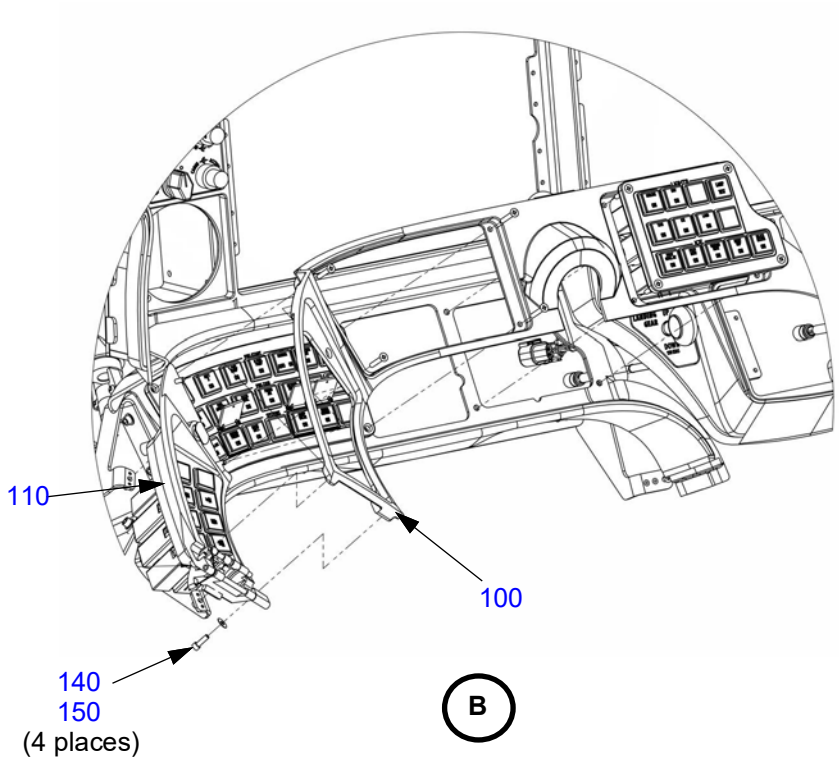

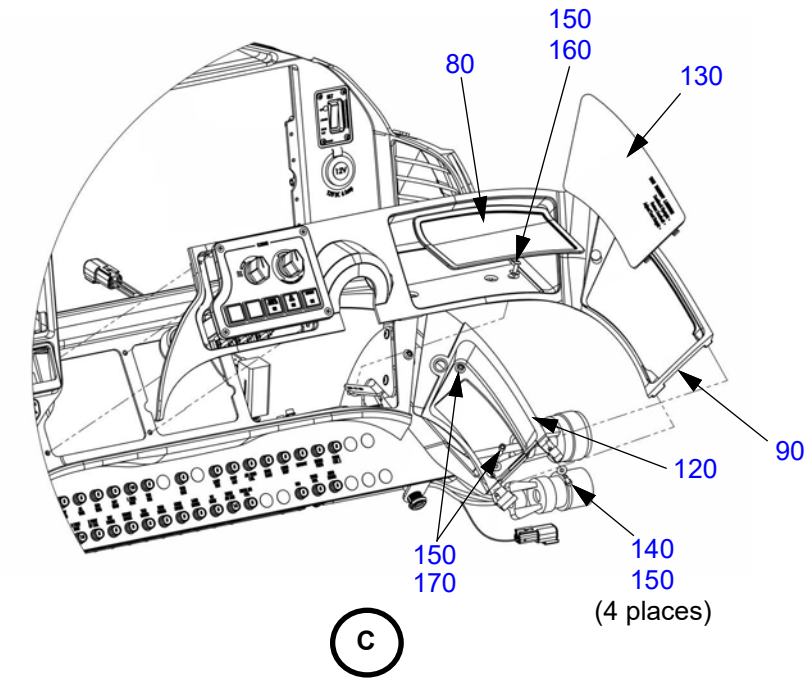

Table 25-10.11: Display Bezels

Figure Item Number	Part Number	Part Name	Effectivity Code	Amount in Assy.
10	AK25121001	Assembly, Display Bezel, LH, I.P.	K003 and On	1
20	AK25121002	Assembly, Display Bezel, RH, I.P.	K003 and On	1
30	AK25121003	Assembly, Placards, Center Display Bezel	K003 and On	1
40	NAS1352-08-8P	Screw, Socket Head .164-32 x .500	K003 and On	6
50	NAS1149FN816P	Washer, Flat #8 x .016	K003 and On	6
60	PK25121008	Subdisplay Tunnel, RH, IP	K003 and On	1
70	PK25121009	Subdisplay Tunnel, LH, IP	K003 and On	1
80	PK25121032	IP Pocket Traction Mat, RH	K003 and On	1
90	PK25121004	Switch Bezel, RH, IP	K003 and On	1
100	PK25121005	Switch Bezels, LH, IP	K003 and On	1
110	AK25121100	Test Switch Door Assy, LH	K003 and On	1
120	PK25121034	Bucket, Test Switch Door Assy, RH	K003 and On	1
130	AK25121033	Cover Assy, Snap-in, Far Side of IP	K003 and On	1
140	NAS1352-06-7P	Screw, Socket Head .138-32 x .438	K003 and On	4
150	NAS1149FN616P	Washer, Flat #6 x .016	K003 and On	7
160	NAS601-8P	Screw, Machine, Pan Head, .138-32 x .500 Lg.	K003 and On	1
170	NAS1352-06-8P	Screw, Socket Head .138-32 x .500	K003 and On	2

This Page Intentionally Left Blank

PASSENGER COMPARTMENT

Figure 25-20.1: Passenger Seats

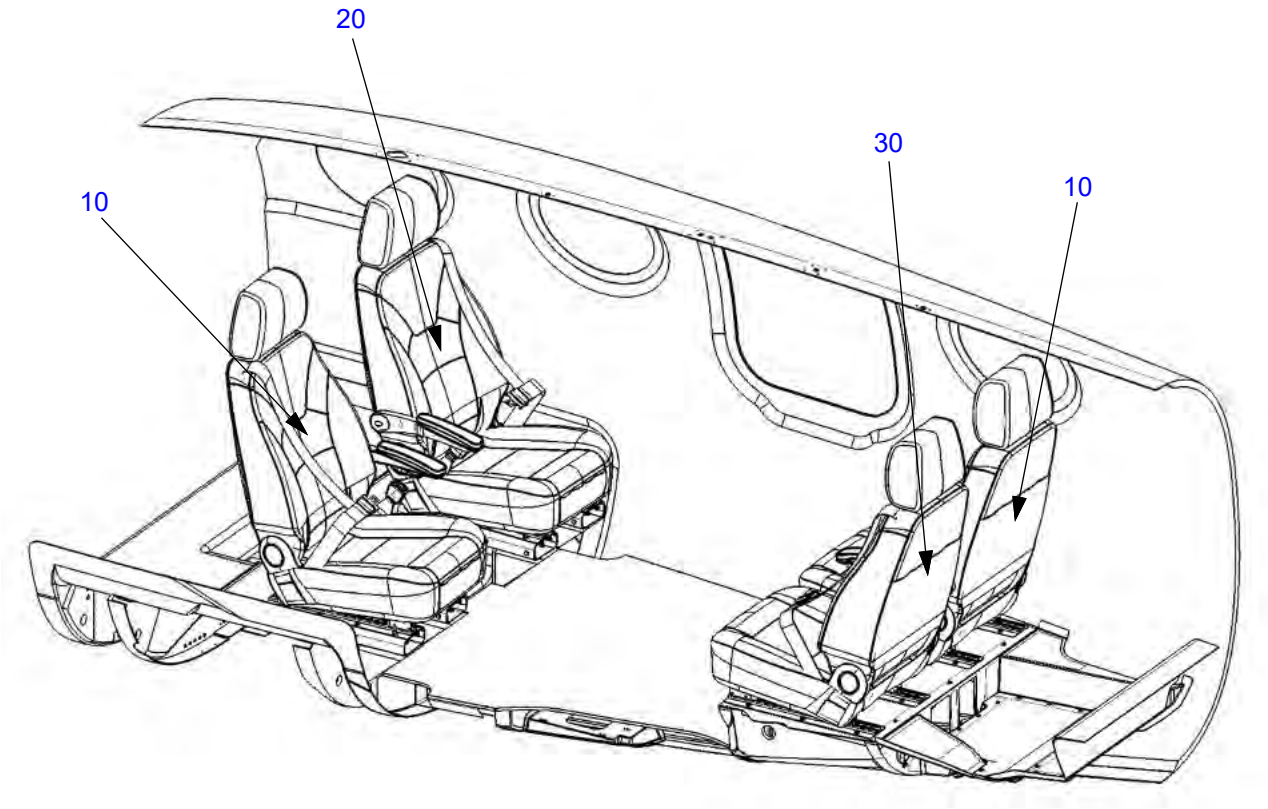

Table 25-20.1: Passenger Seats

Figure Item Number	Part Number	Part Name	Effectivity Code	Amount in Assy.
10	2041-2520255-002	Seat, Passenger, Mid Left, Aft Right (Refer to Millennium CMM/IPC document number: 2041-CMM019)	K003 and On	2
20	2041-2520255-001	Seat, Passenger, Mid Right (Refer to Millennium CMM/IPC document number: 2041-CMM019)	K003 and On	1
30	2041-2520255-003	Seat, Passenger, Aft Left (Refer to Millennium CMM/IPC document number: 2041-CMM019)	K003 and On	1

Figure 25-20.2: Flooring

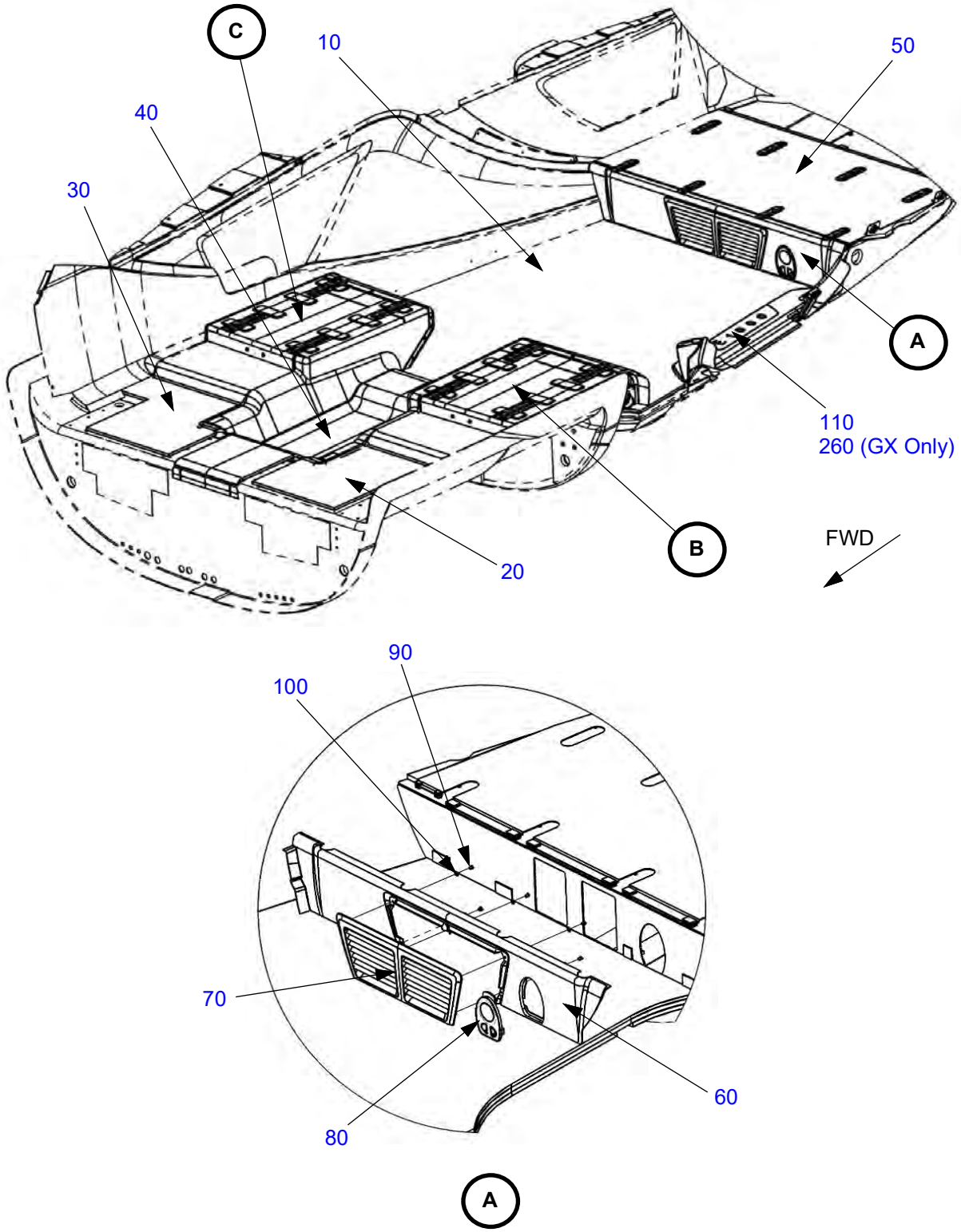

Figure 25-20.2: Flooring (Continued)

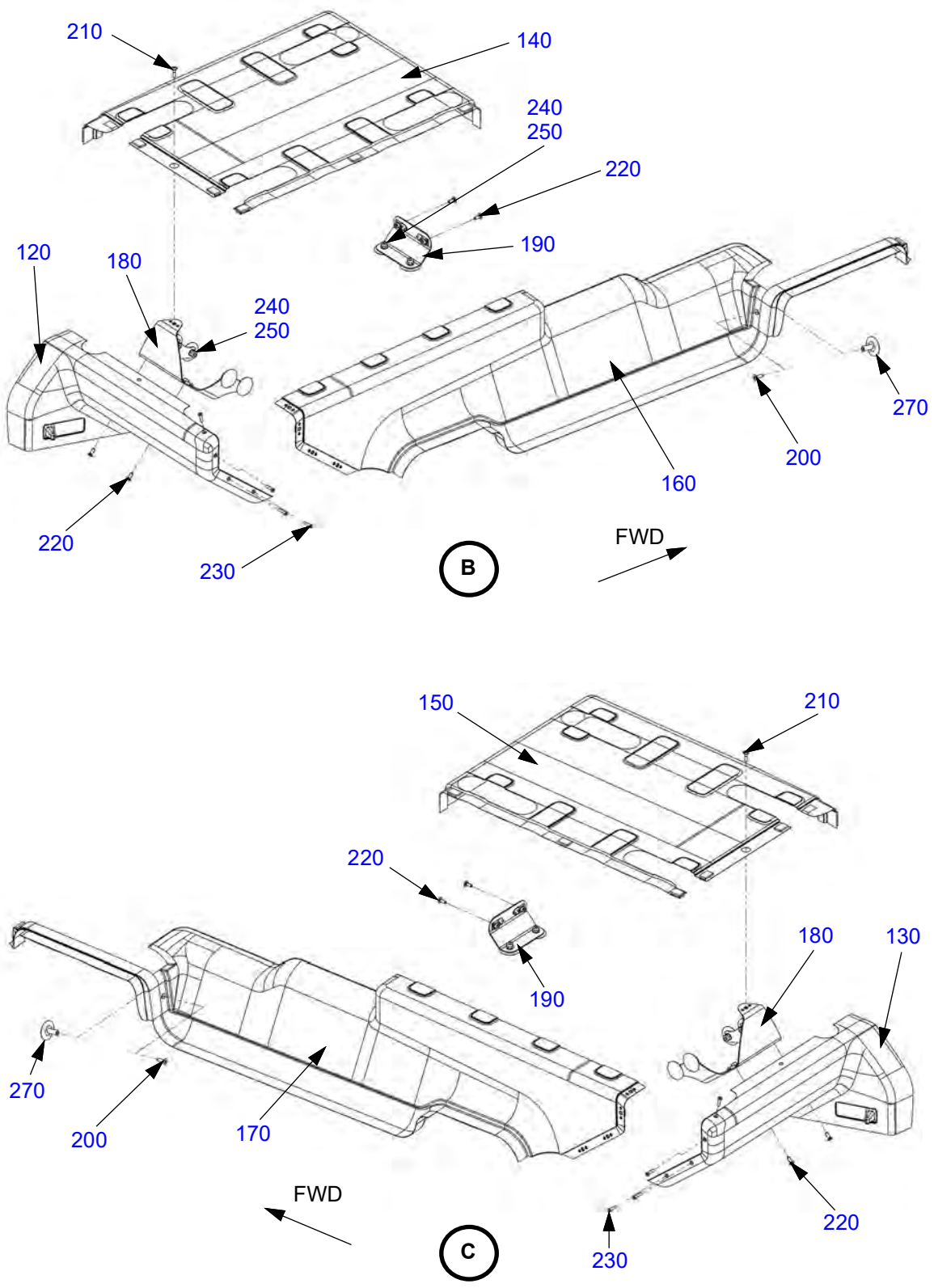

Table 25-20.2: Flooring

Figure Item Number	Part Number	Part Name	Effectivity Code	Amount in Assy.
10	PK25230007	Carpet, Cabin	K003 and On	1
20	PK25230001	Carpet, Spar Box, LH	K003 and On	1
30	PK25230002	Carpet, Spar Box, RH	K003 and On	1
40	AK25230028	Assembly, Substrate, Spar Box, Carpet Runner	K003 and On	1
50	AK25230009	Assembly, Panel, Aft Seat	K003 and On	1
60	AK25230008	Assembly, Panel, Aft Valance	K003 and On	1
70	AK25230010	Assembly, Bezel, Ac Intake Grill	K003 and On	1
80	AK25230021	Assembly, Cover, Fill Port, Oxygen	K003 and On	1
90	MS51957-26	Screw, Pan Head, .138 x .250 Lg., CRES	K003 and On	5
100	NAS1149FN632P	Washer, Flat #6 x .032	K003 and On	5
110	AK25230023	Threshold, Assembly	K003 - K010	1
120	AK25230005 B	Assembly, Forward Valance, LH	K003 - K006	1
	AK25230005 C	Assembly, Forward Valance, LH	K007 and On	1
130	AK25230006 B	Assembly, Forward Valance, RH	K003 - K006	1
	AK25230006 C	Assembly, Forward Valance, RH	K007 and On	1
140	AK25230019	Assembly, Seat Rail Cover Mid Row, LH	K003 and On	1
150	AK25230020	Assembly, Seat Rail Cover Mid Row, RH	K003 and On	1
160	AK25230029	Assembly, Cover, Sparbox, LH	K003 and On	1
170	AK25230030	Assembly, Cover, Sparbox, RH	K003 and On	1
180	AK25230031	Bracket Assembly	K003 and On	2
190	AK25230032	Bracket, Floor, Fwd, Assembly	K003 and On	2
200	MS24694-S51	Screw, Machine, C'sunk Ø .190 x 19/32	K003 and On	2
210	AN525-832R10	Screw, Washer Head, .164 x .625 Lg.	K003 and On	2
220	AN525-832R7	Screw, Washer Head, .164 x .438 Lg.	K003 and On	8
230	MS24693-29B	Screw, Machine, C'sunk, Blk Oxide Ø .138 x 0.625	K003 and On	8

Figure Item Number	Part Number	Part Name	Effectivity Code	Amount in Assy.
240	MS21044N3	Nut, Self-locking, Steel 10-32	K003 and On	12
250	NAS1149F0332P	Washer, Flat #10 x .032	K003 and On	12
260	AK25230023	Threshold, Assembly, GX	K011 and On	1
270	CB4001E3CR13	10-32 Female, 0.812 Tall, Click Bond	K003 and On	2

Figure 25-20.3: Overhead Finish Panel

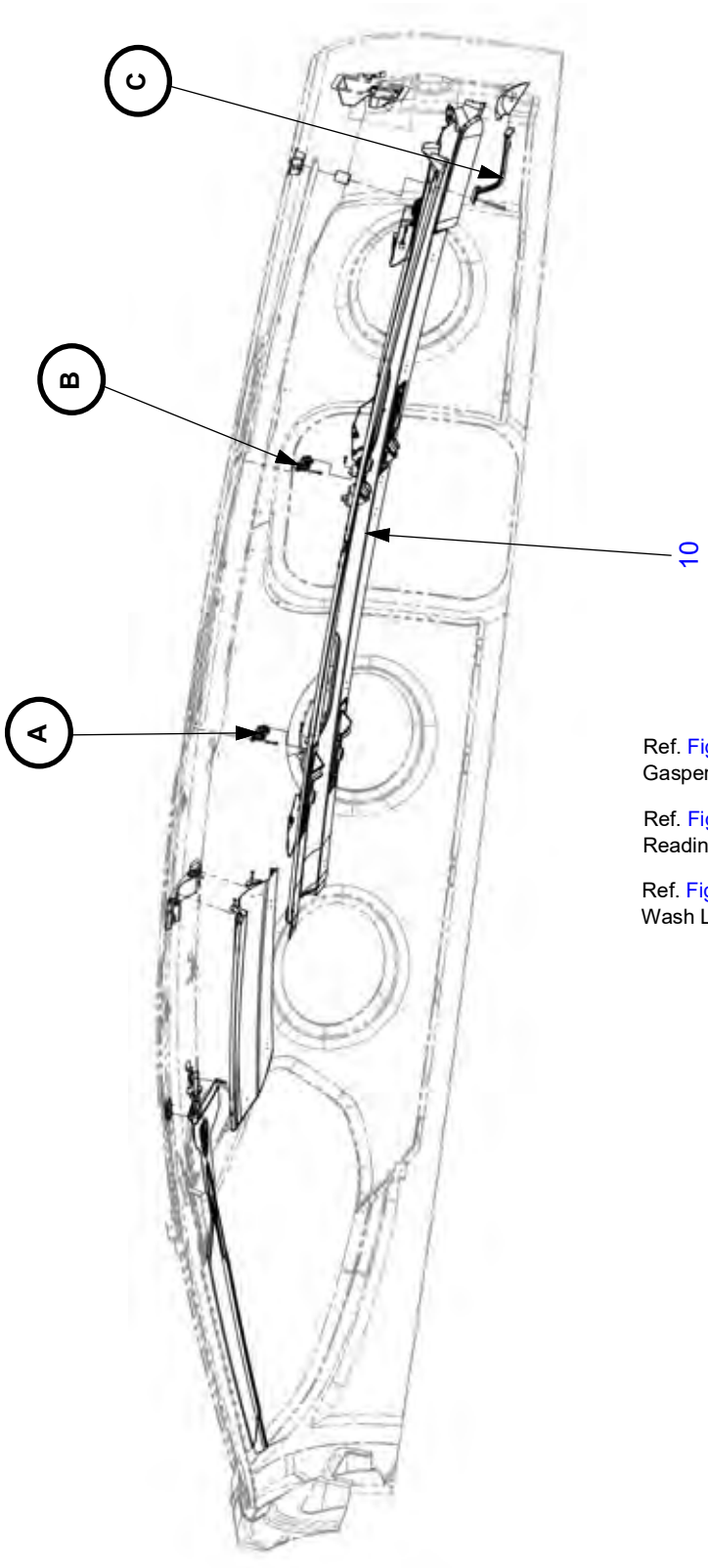

Ref. Figure 21-20.3: for Gaspers

Ref. Figure 33-20.1: for Reading/Cargo Lights.

Ref. Figure 33-20.2: for Wash Lights.

Figure 25-20.3: Overhead Finish Panel (Continued)

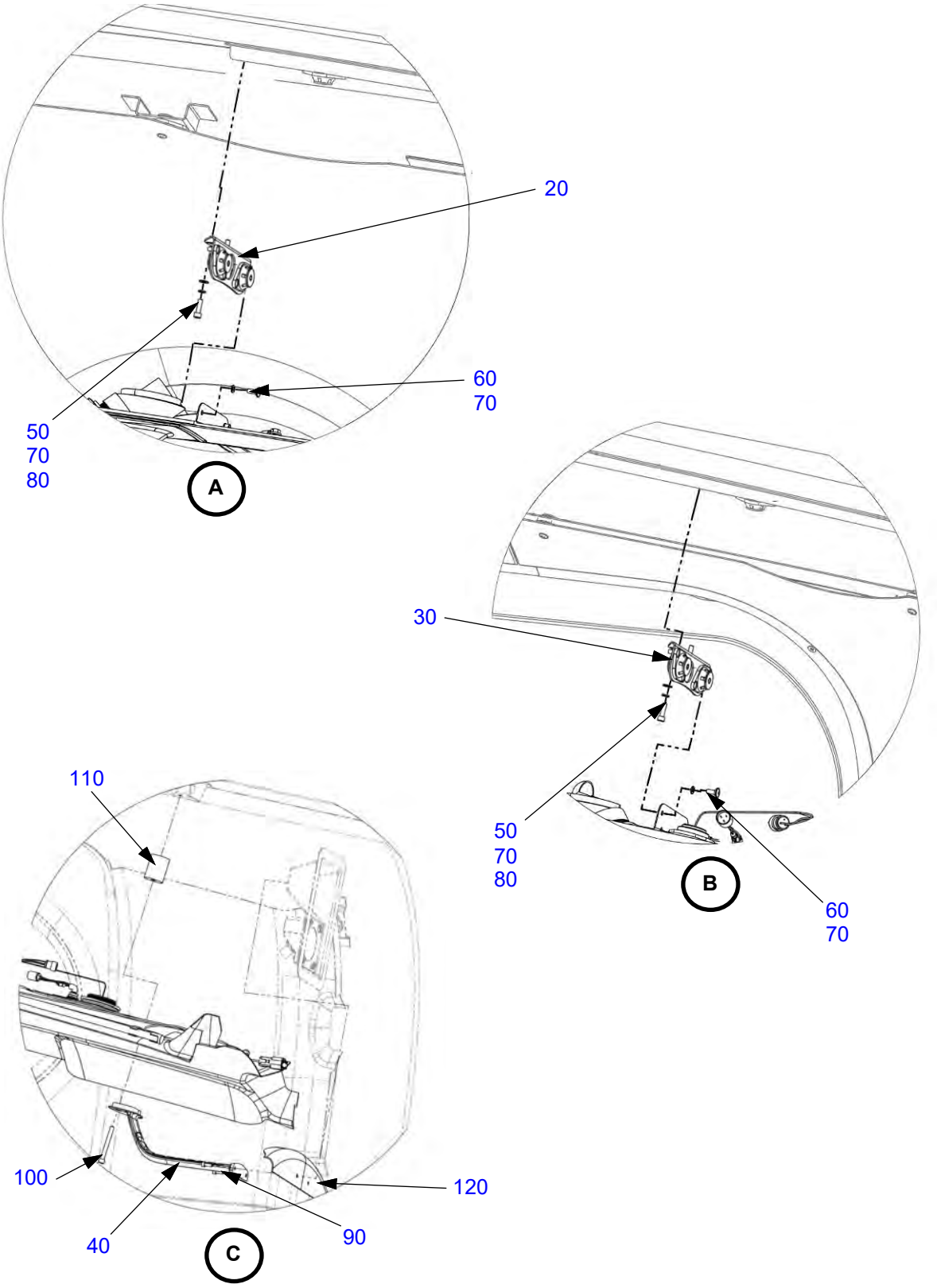

Table 25-20.3: Overhead Finish Panel

Figure Item Number	Part Number	Part Name	Effectivity Code	Amount in Assy.
10	AK25223400	Overhead Console Assy, Aft	K003 and On	1
20	AK25223100	Bracket Assy #1, Isolator, Overhead Console	K003 and On	1
30	AK25223101	Bracket Assy #2, Isolator, Overhead Console	K003 and On	1
40	AK25530000	Aft Grab Handle Assembly	K003 and On	1
50	NAS1352-08-9P	Screw, Socket Head .164-32 x .563	K003 and On	4
60	AN525-832R6	Screw, Washer Head, .164 x .375 Lg.	K003 and On	4
70	MS35338-42	Washer, Lock-spring, Ø.164	K003 and On	8
80	NAS1149FN832P	Washer, Flat #8 x .032	K003 and On	4
90	NAS1351-3-8P	Screw, Socket Head Ø .190-32 x .500	K003 and On	2
100	NAS1351-4-36P	Screw, Socket Head Ø .250-28 x 2.25	K003 and On	1
110	PK25223002	Spacer, Aft Grab Handle Mount	K003 and On	1
120	PK25530003	Scoop, Air Inflow, Cabin Panel Upper System	K003 and On	1

Figure 25-20.4: Upper Finish Panels, LH

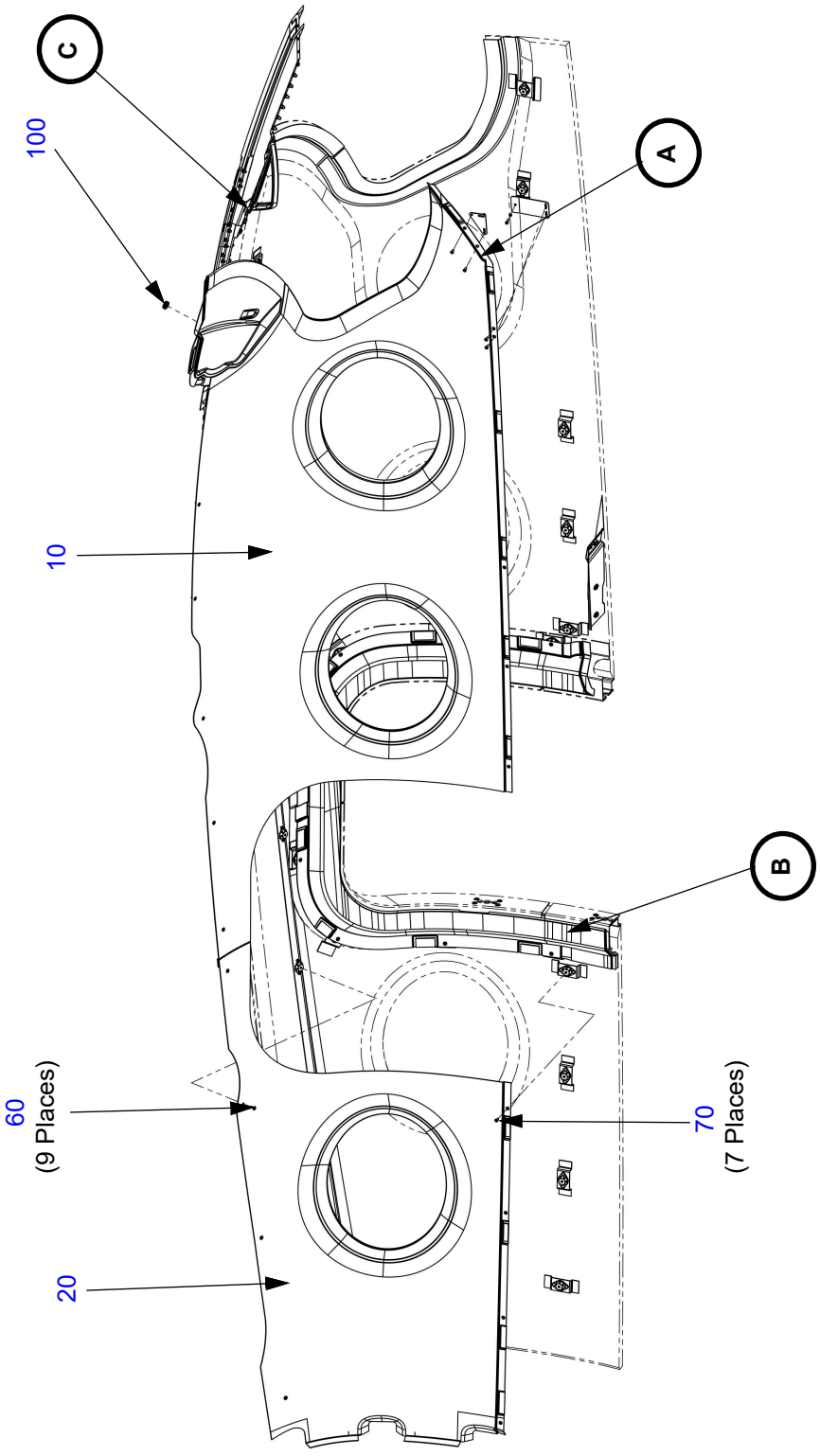

Figure 25-20.4: Upper Finish Panels, LH (Continued)

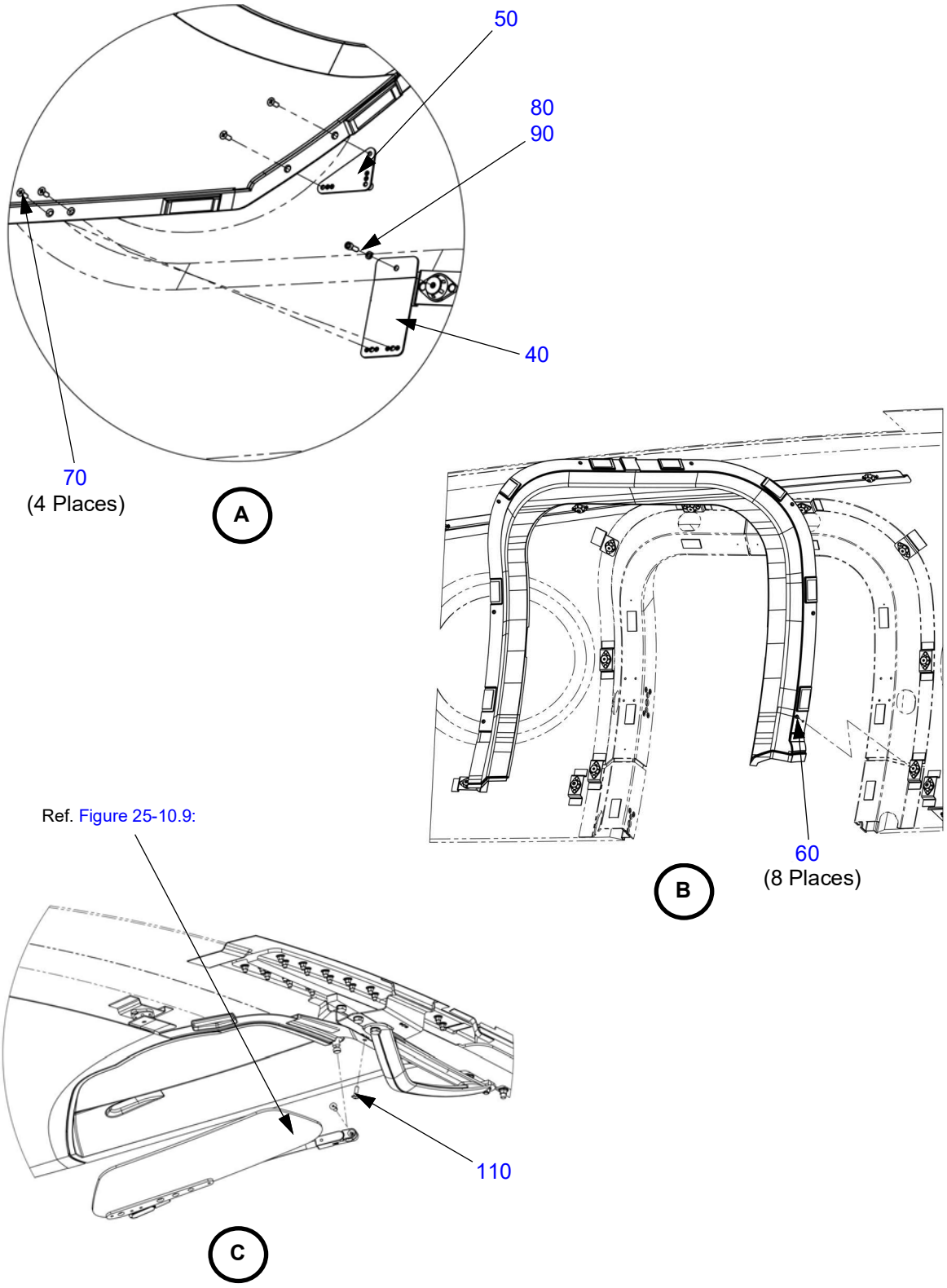

Table 25-20.4: Upper Finish Panels, LH

Figure Item Number	Part Number	Part Name	Effectivity Code	Amount in Assy.
10	AK25221201	Fwd Panel, Cabin, Upper, LH Assembly	K003 and On	1
20	AK25221202	Aft Panel, Cabin, Upper, LH Assembly	K003 and On	1
30	AK25221203	Surround Panel Assy, Cabin Door	K003 and On	1
40	AK25221225	Bracket Assy, Upper Panel	K003 and On	1
50	AK25122038	Plate Assy, Spanner, Crew Interior Panels, LH	K003 and On	1
60	AN525-832R7	Screw, Washer Head, .164 x .438 Lg.	K003 and On	17
70	MS24693-S49	Screw, Machine, C'sunk Ø .164 x 0.437	K003 and On	11
80	NAS1352-08-8P	Screw, Socket Head .164-32 x .500	K003 and On	1
90	MS35338-42	Washer, Lock-spring, Ø.164	K003 and On	1
100	MS35489-9	Grommet, .312 ID x .812 OD x .062 Groove	K003 and On	1
110	AN525-832R9	Screw, Washer Head, .164 x .563 Lg.	K003 and On	1

Figure 25-20.5: Upper Finish Panels, RH

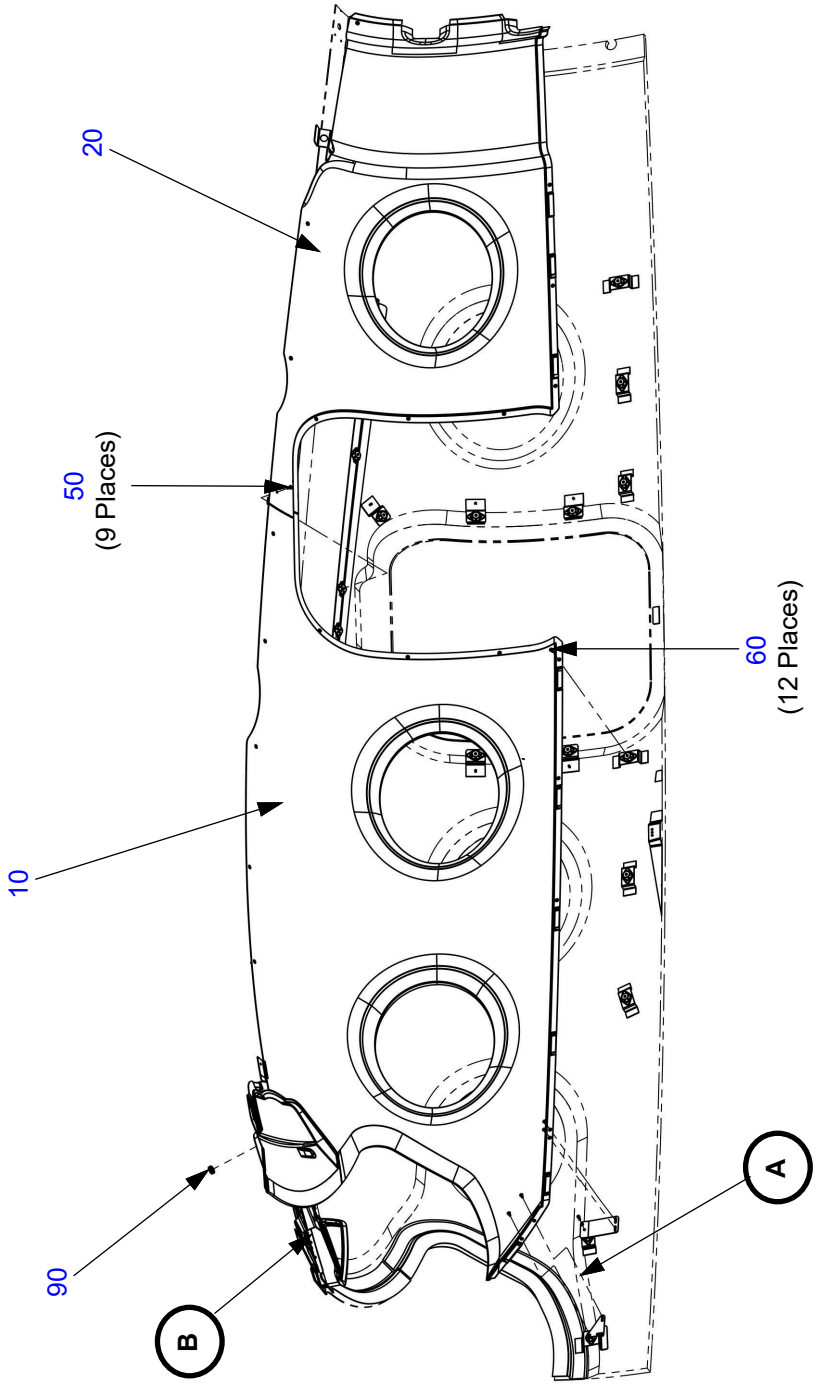

Figure 25-20.5: Upper Finish Panels, RH (Continued)

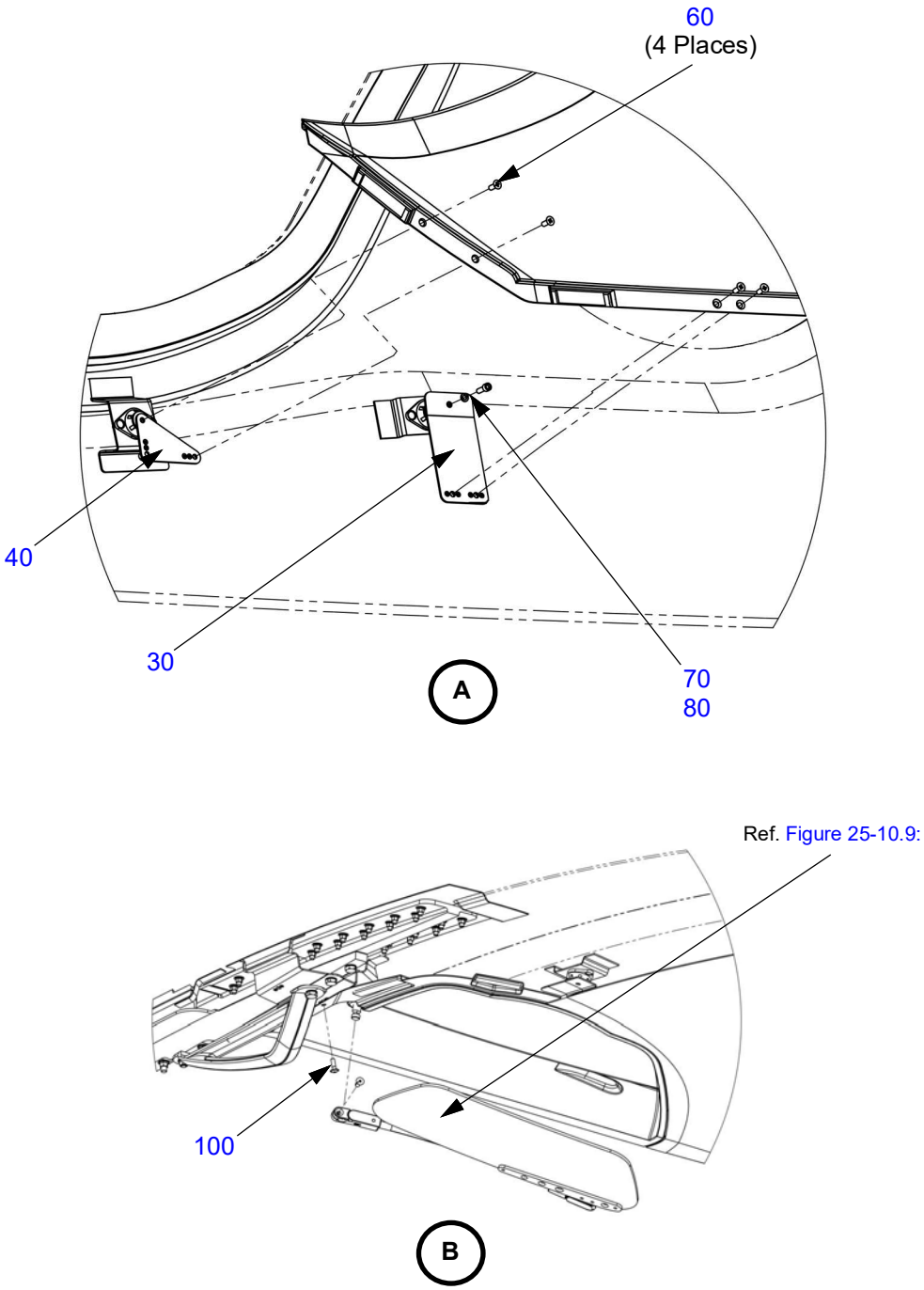

Table 25-20.5: Upper Finish Panels, RH

Figure Item Number	Part Number	Part Name	Effectivity Code	Amount in Assy.
10	AK25222201	Fwd Panel, Cabin, Upper, RH Assembly	K003 and On	1
20	AK25222202	Aft Panel, Cabin, Upper, RH Assembly	K003 and On	1
30	AK25221225	Bracket Assy, Upper Panel	K003 and On	1
40	AK25122041	Plate Assy, Spanner, Crew Interior Panels, RH	K003 and On	1
50	AN525-832R7	Screw, Washer Head, .164 x .438 Lg.	K003 and On	9
60	MS24693-S49	Screw, Machine, C'sunk Ø .164 x 0.437	K003 and On	16
70	NAS1352-08-8P	Screw, Socket Head .164-32 x .500	K003 and On	1
80	MS35338-42	Washer, Lock-spring, Ø.164	K003 and On	1
90	MS35489-9	Grommet, .312 ID x .812 OD x .062 Groove	K003 and On	1
100	AN525-832R9	Screw, Washer Head, .164 x .563 Lg.	K003 and On	1

Figure 25-20.6: Lower Finish Panels, LH

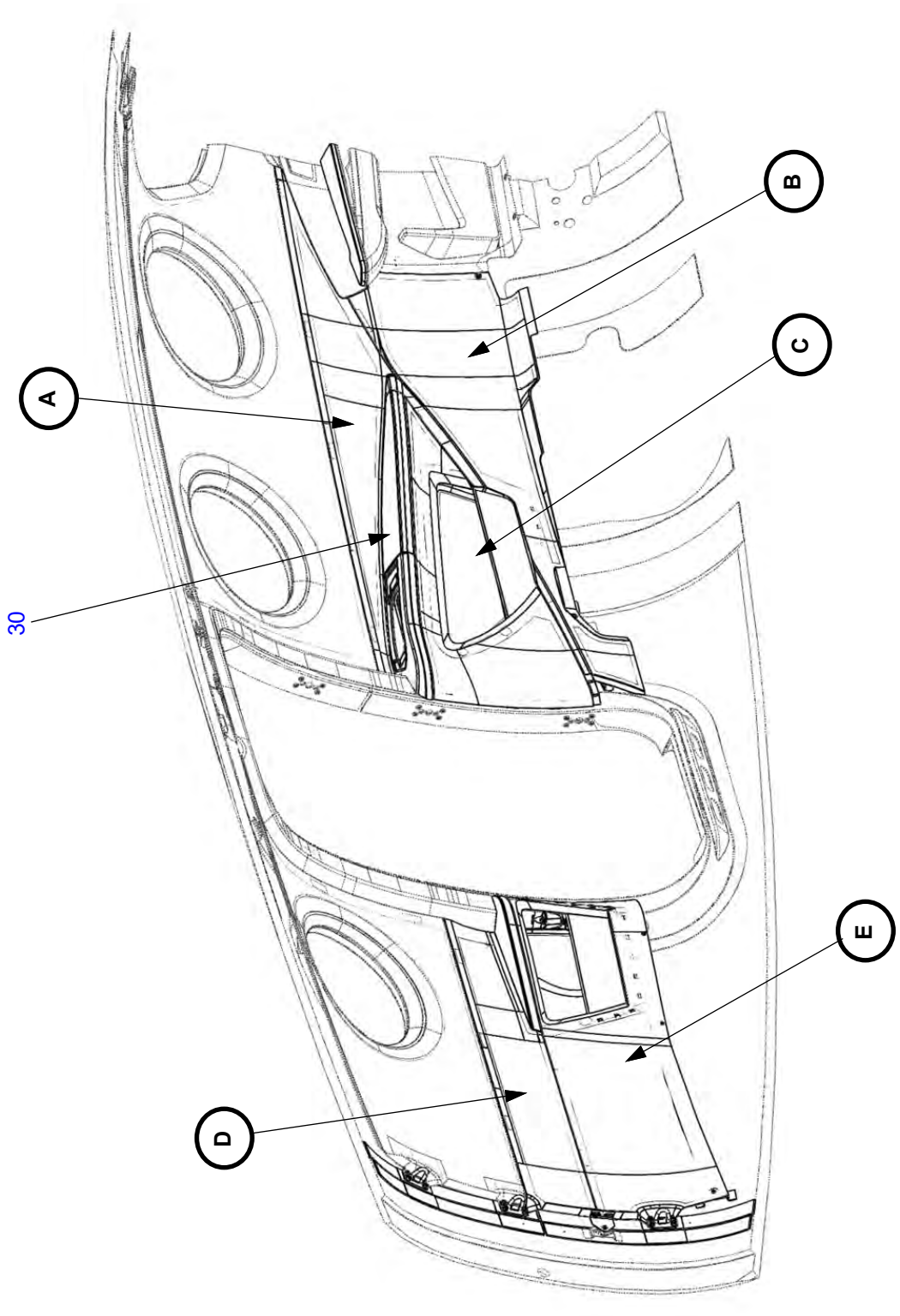

Figure 25-20.6: Lower Finish Panels, LH (Continued)

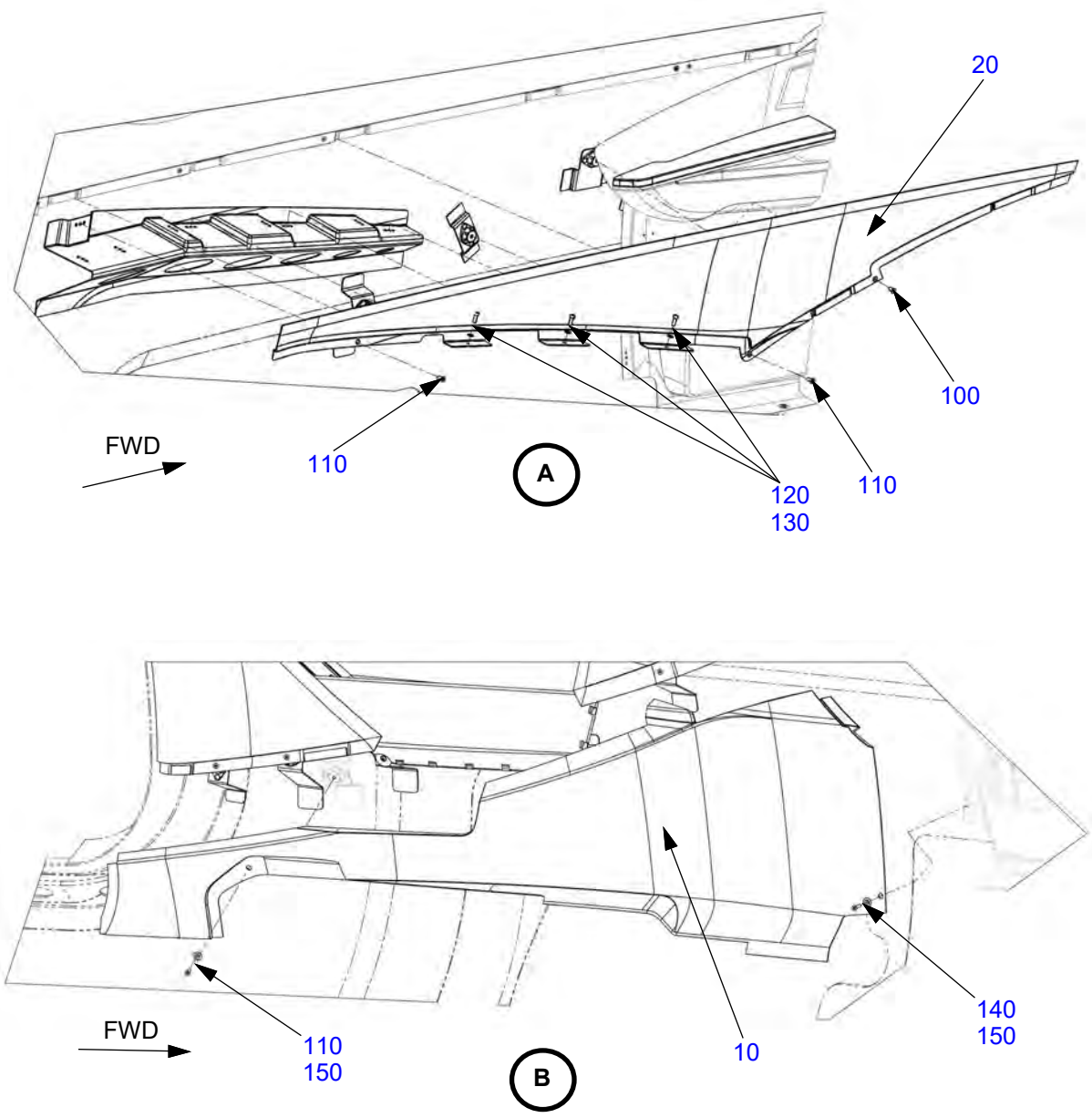

Figure 25-20.6: Lower Finish Panels, LH (Continued)

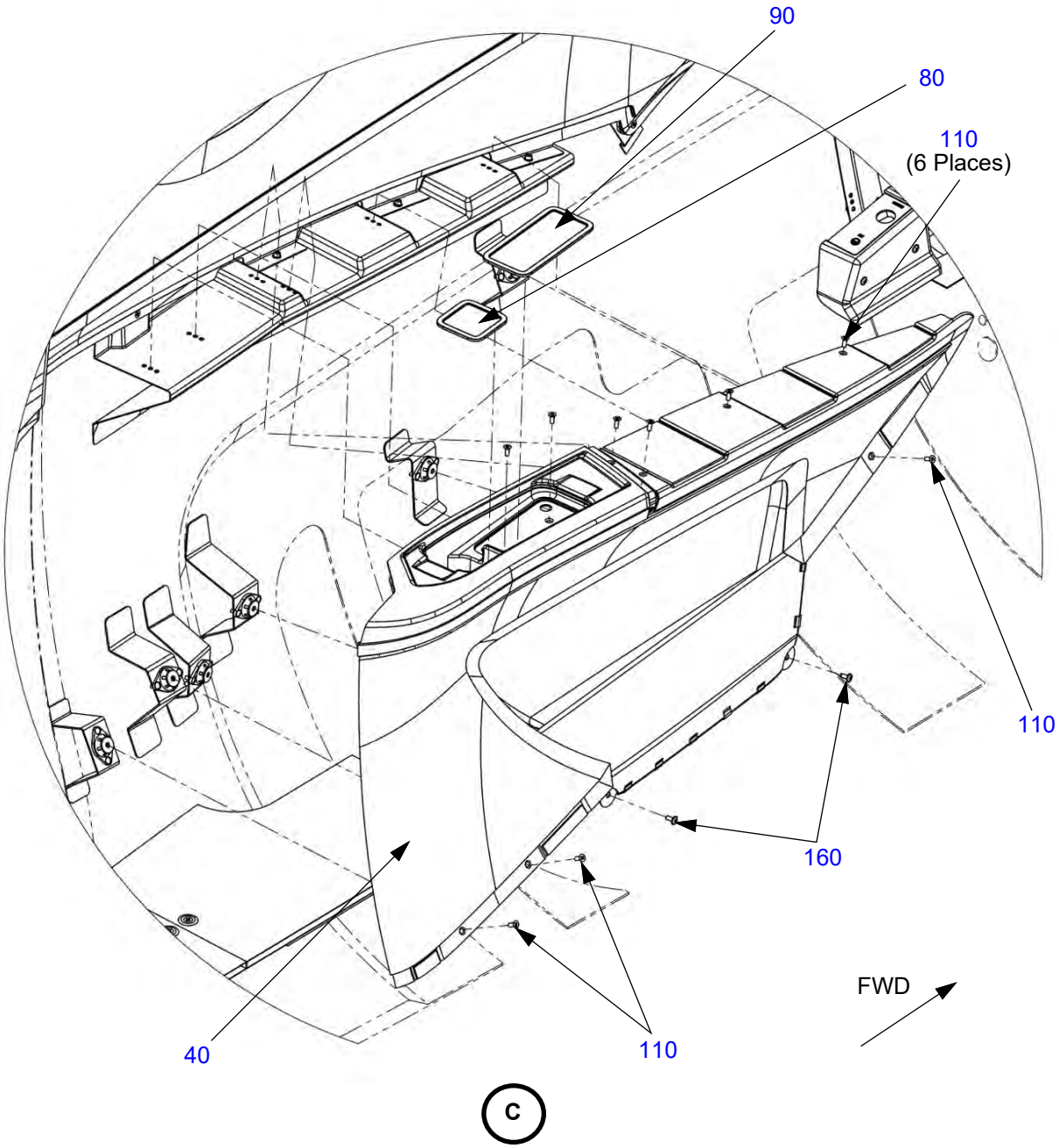

Figure 25-20.6: Lower Finish Panels, LH (Continued)

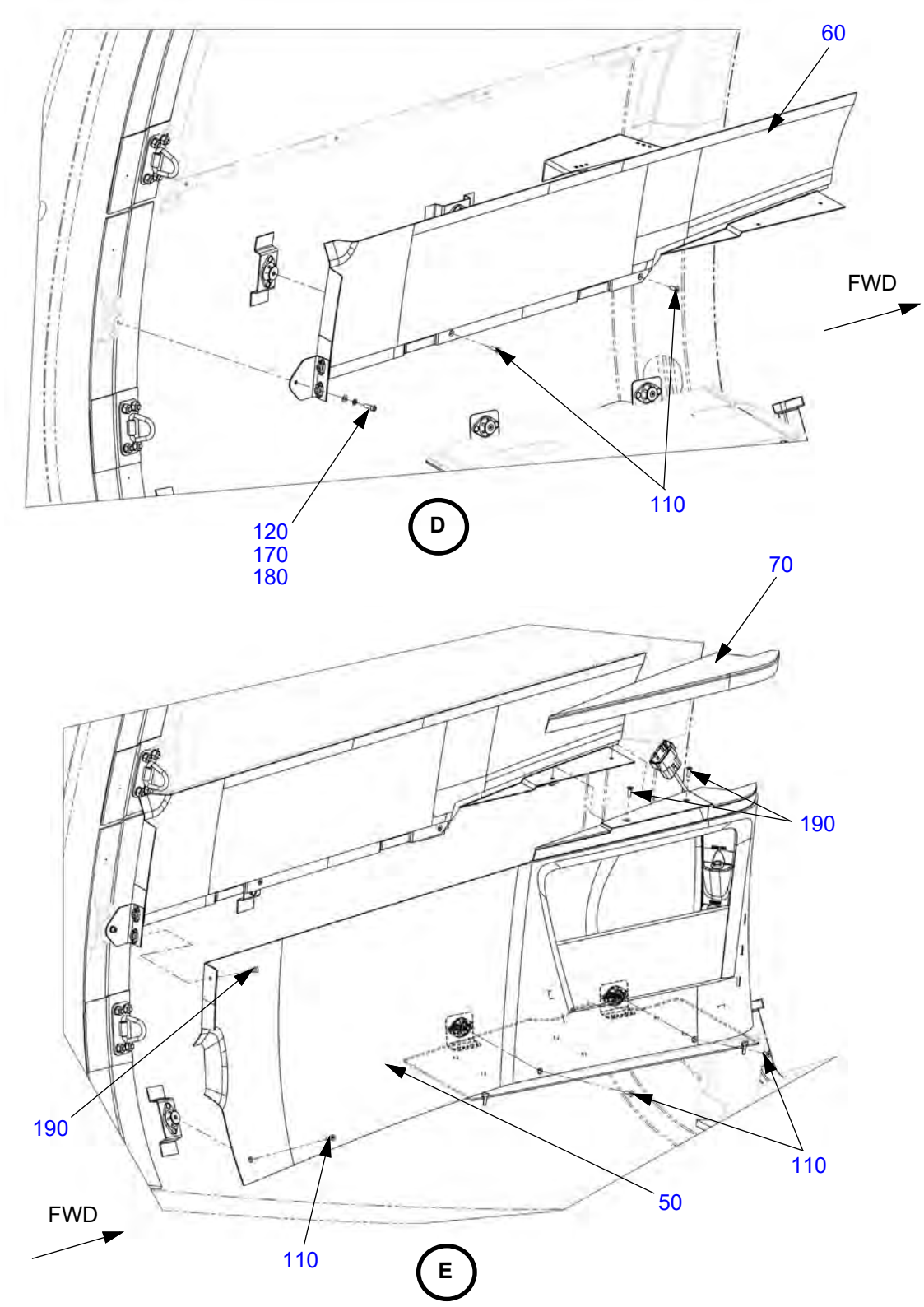

Table 25-20.6: Lower Finish Panels, LH

Figure Item Number	Part Number	Part Name	Effectivity Code	Amount in Assy.
10	AK25221121	Panel Assy, Lower, Midrow, LH	K003 and On	1
20	AK25221122	Panel Assy, Closeout, Midrow , LH	K003 and On	1
30	AK25221123	Panel Assy, Armrest, Midrow, LH	K003 and On	1
40	AK25221124	Panel Assy, Accessory Closeout, Midrow, LH	K003 and On	1
50	AK25221129	Panel Assy, Closeout, Lower, Aft Row, LH	K003 and On	1
60	AK25221130	Panel Assy, Closeout Upper, Aft Row, LH	K003 and On	1
70	AK25221134	Panel Assy, Armrest, Aft Row, LH	K003 and On	1
80	PK25222130	Mat, Cup Holders	K003 and On	1
90	PK25221118	Mat, Storage, LH	K003 and On	1
100	MS24693-S48	Screw, Machine, C'sunk Ø .164 x 0.375	K003 and On	1
110	MS24693-S49	Screw, Machine, C'sunk Ø .164 x 0.437	K003 and On	17
120	NAS1352-08-8P	Screw, Socket Head .164-32 x .500	K003 and On	4
130	NAS1149FN832P	Washer, Flat #8 x .032	K003 and On	3
140	MS24693-S51	Screw, Machine, C'sunk Ø .164 x 0.625	K003 and On	1
150	NAS1169C8	Washer, Dimpled, CRES No. 8 x .025	K003 and On	2
160	AN525-832R7	Screw, Washer Head, .164 x .438 Lg.	K003 and On	2
170	MS35338-42	Washer, Lock-spring, Ø.164	K003 and On	1
180	NAS1149FN816P	Washer, Flat #8 x .016	K003 and On	1
190	MS24693-S50	Screw, Machine, C'sunk Ø .164 x 0.500	K003 and On	3

Figure 25-20.7: Lower Finish Panels, RH

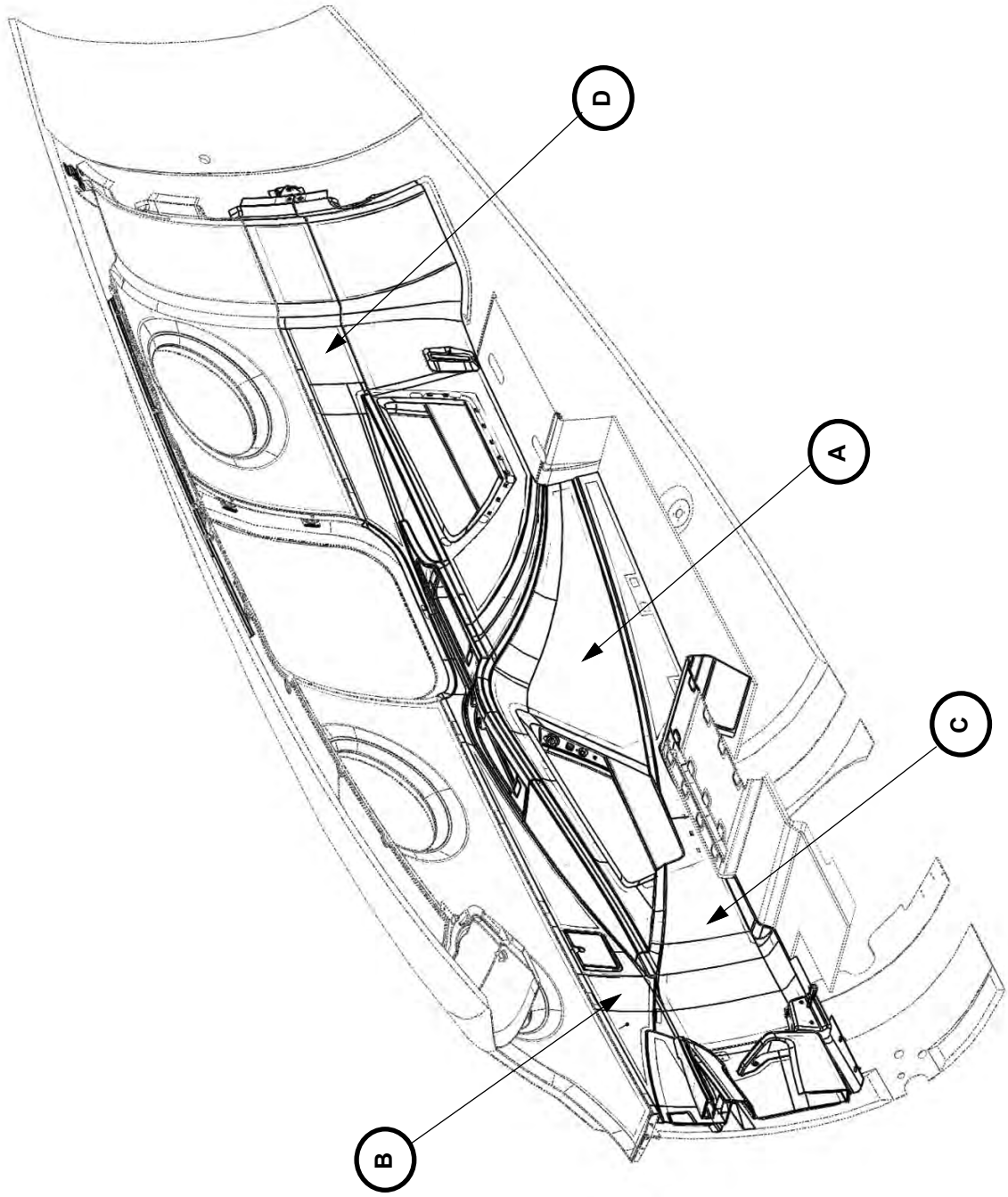

Figure 25-20.7: Lower Finish Panels, RH (Continued)

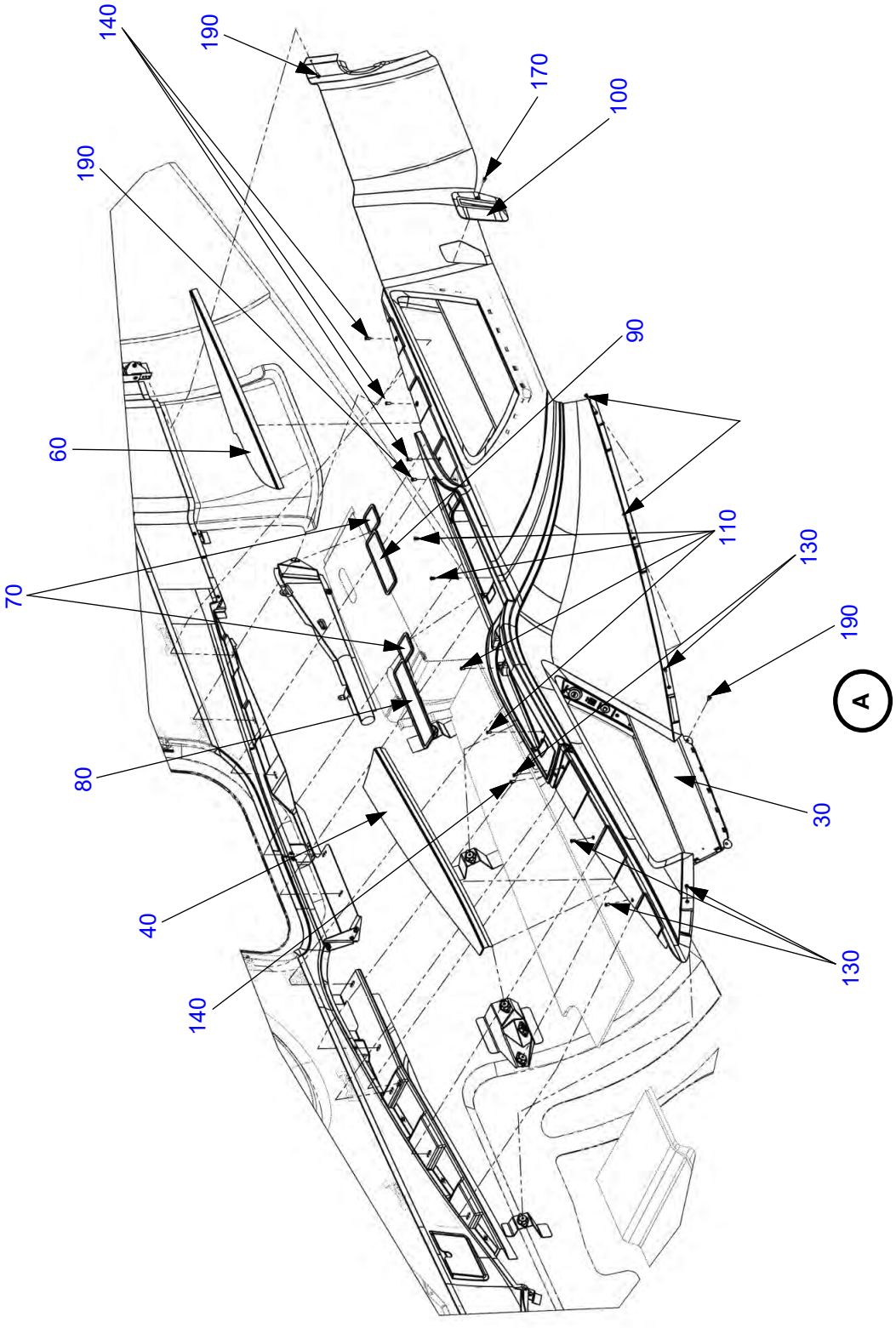

Figure 25-20.7: Lower Finish Panels, RH (Continued)

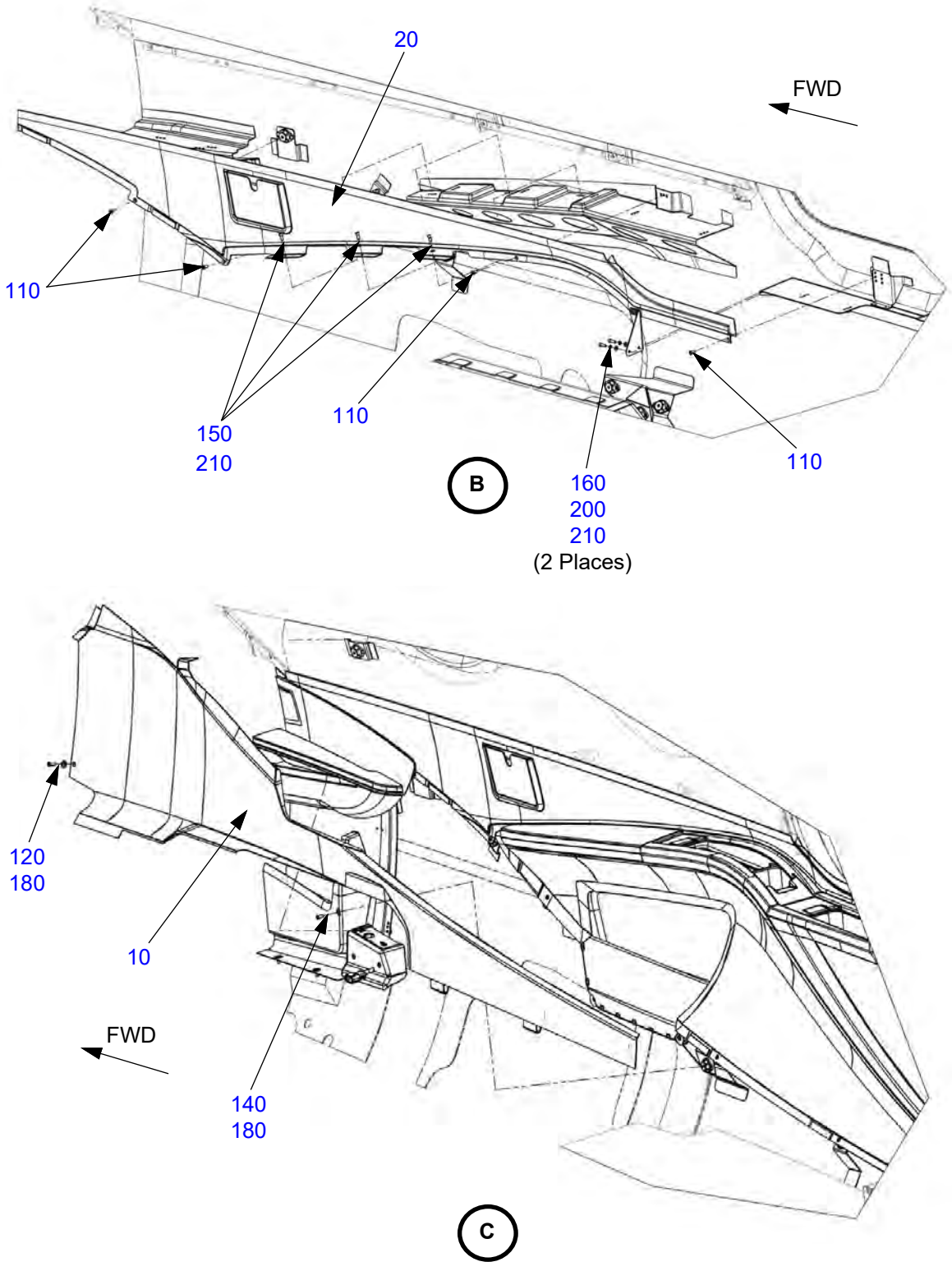

Figure 25-20.7: Lower Finish Panels, RH (Continued)

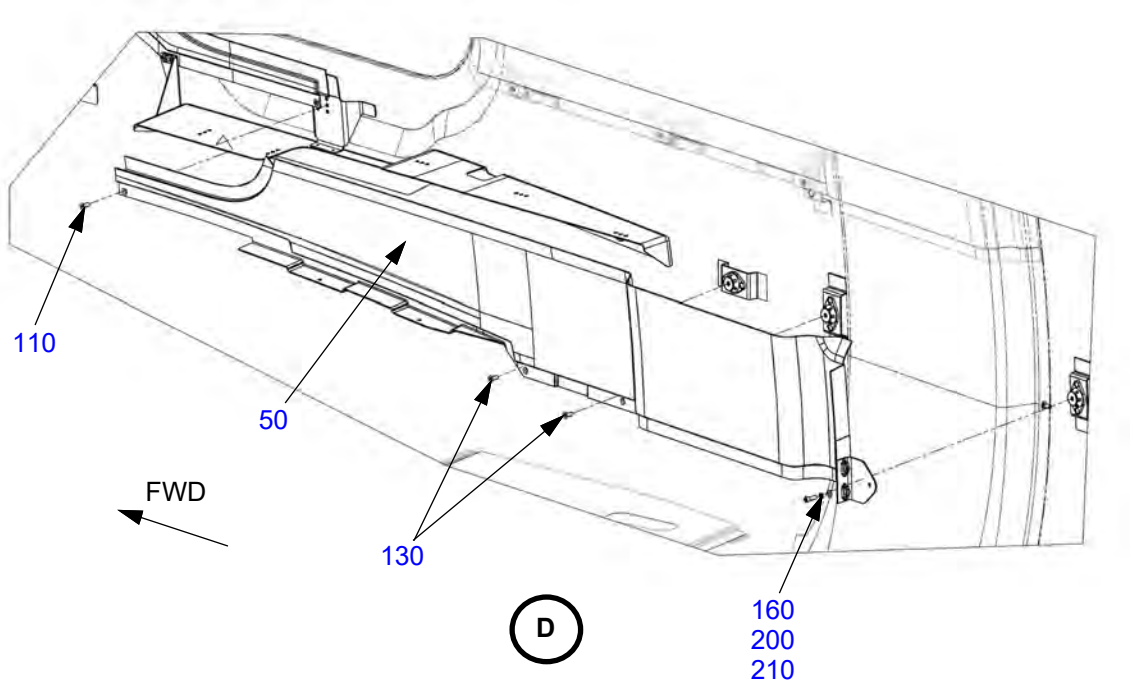

Table 25-20.7: Lower Finish Panels, RH

Figure Item Number	Part Number	Part Name	Effectivity Code	Amount in Assy.
10	AK25222131	Panel Assy, Lower, Midrow, RH	K003 and On	1
20	AK25222132	Panel Assy, Closeout, Midrow, RH	K003 and On	1
30	AK25222133	Panel Assy, Large, Closeout, RH	K003 and On	1
40	AK25222134	Panel Assy, Armrest, Midrow, RH	K003 and On	1
50	AK25222139	Panel Assy, Closeout, Aft Row, RH	K003 and On	1
60	AK25222140	Panel Assy, Armrest, Aft Row, RH	K003 and On	1
70	PK25222130	Mat, Cup Holders	K003 and On	2
80	PK25222119	Mat, Storage, Mid, RH	K003 and On	1
90	PK25222120	Mat, Storage, Aft, RH	K003 and On	1
100	PK25222177	Bezel, Vent, Aft Heat	K003 and On	1
110	MS24693-C49	Screw, Machine, C'sunk, CRES Ø .164 x 0.437	K003 and On	9
120	MS24693-C51	Screw, Machine, C'sunk, CRES Ø .164 x 0.625	K003 and On	1
130	MS24693-S49	Screw, Machine, C'sunk Ø .164 x 0.437	K003 and On	9
140	MS24693-S50	Screw, Machine, C'sunk Ø .164 x 0.500	K003 and On	5
150	NAS1352-08-6P	Screw, Socket Head .164-32 x .375	K003 and On	3
160	NAS1352-08-8P	Screw, Socket Head .164-32 x .500	K003 and On	3
170	MS24693-50B	Screw, Machine, C'sunk, Blk Oxide Ø .164 x 0.500	K003 and On	1
180	NAS1169C8	Washer, Dimpled, CRES No. 8 x .025	K003 and On	2
190	AN525-832R7	Screw, Washer Head, .164 x .438 Lg.	K003 and On	2
200	MS35338-42	Washer, Lock-spring, Ø.164	K003 and On	3
210	NAS1149FN816P	Washer, Flat #8 x .016	K003 and On	6

This Page Intentionally Left Blank

CARGO COMPARTMENT

Figure 25-50.1: Cargo Net

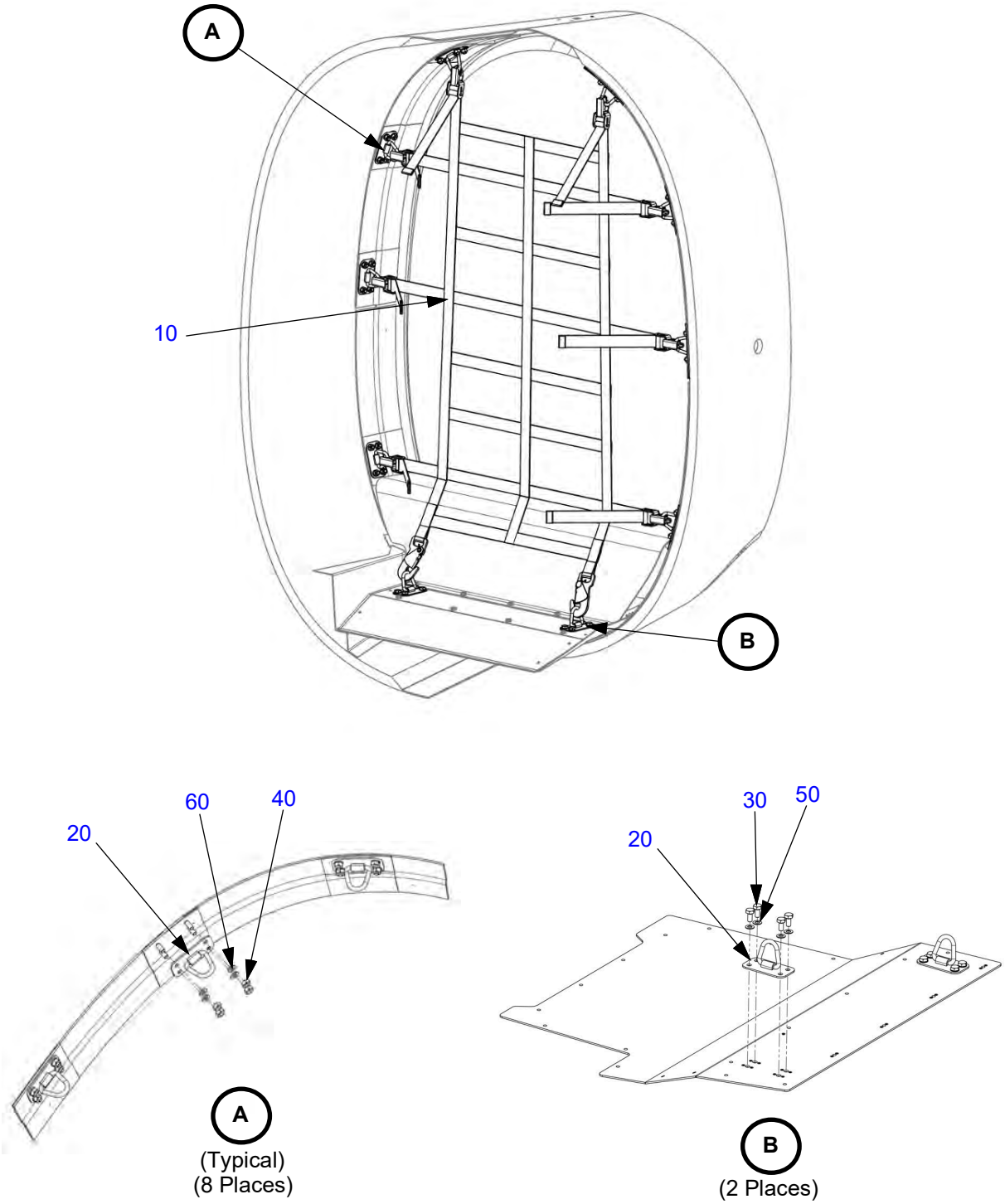

Table 25-50.1: Cargo Net

Figure Item Number	Part Number	Part Name	Effectivity Code	Amount in Assy.
10	PK99007100	Cargo Net Assembly	K003 and On	1
20	AK50400100	Anchor Plate Weldment, Cargo Net	K003 and On	8
30	AN4-4A	Bolt, 1/4-28 x 17/32" Undrilled	K003 and On	8
40	MS21083N4	Nut, Self-locking, Non-metalic Insert 1/4-28	K003 and On	32
50	NAS1149F0432P	Washer, Flat 1/4 x .032	K003 and On	8
60	NAS1149F0463P	Washer, Flat 1/4 x .063	K003 and On	32

Figure 25-50.2: Cargo Floor

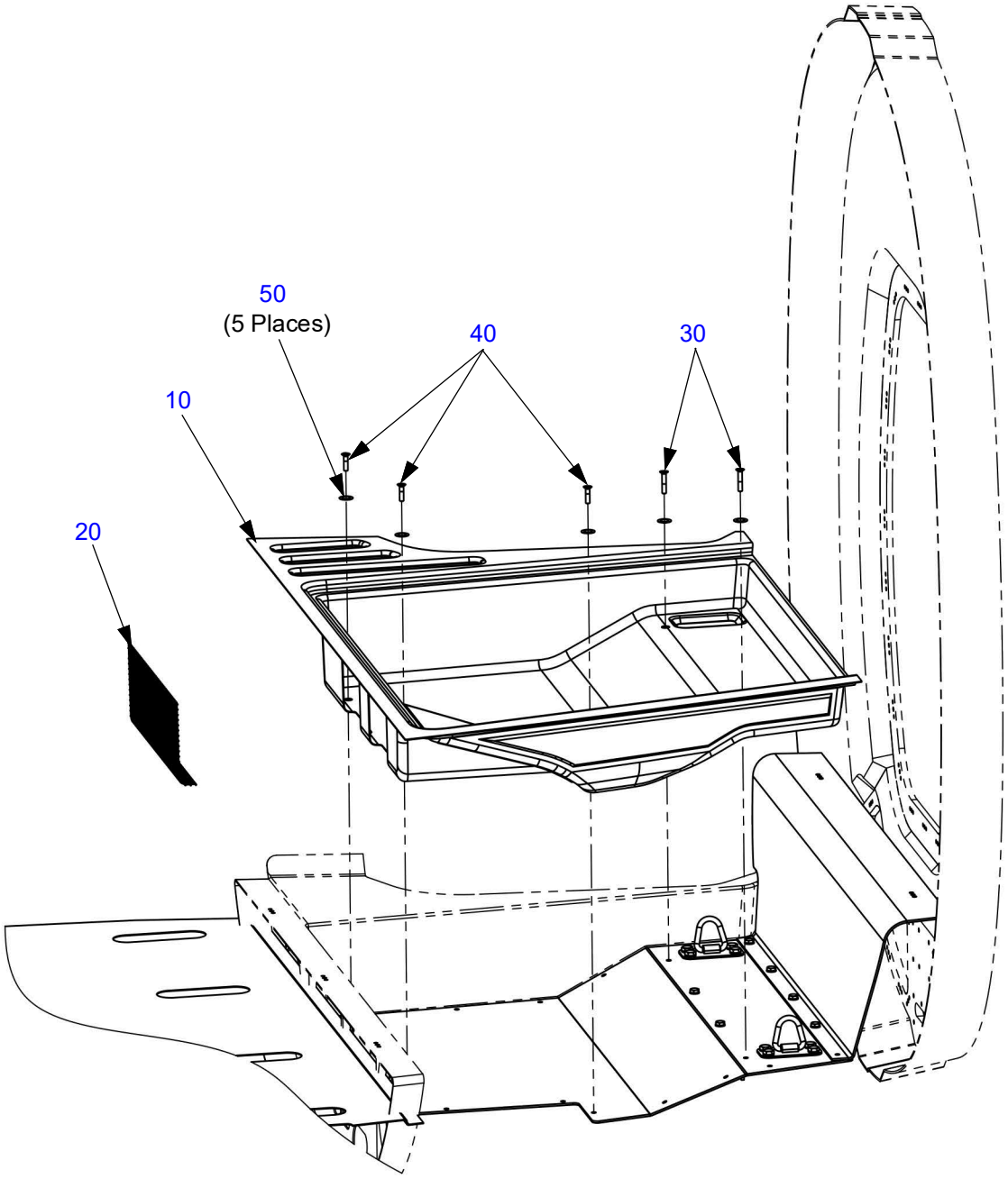

Table 25-50.2: Cargo Floor

Figure Item Number	Part Number	Part Name	Effectivity Code	Amount in Assy.
10	PK25510001	Bucket, Cargo Floor	K003 and On	1
20	PK25510002	FOD Mesh, Bucket, Cargo Floor	K003 and On	1
30	MS24694-C58	Screw, Machine, C'sunk, CRES Ø .190 x 1-1/32	K003 and On	2
40	MS24694-C54	Screw, Machine, C'sunk, CRES Ø .190 x 25/32	K003 and On	3
50	NAS1169C10L	Washer, Dimpled, CRES No. 10 x .016	K003 and On	5

Figure 25-50.3: Aft Finish Panel

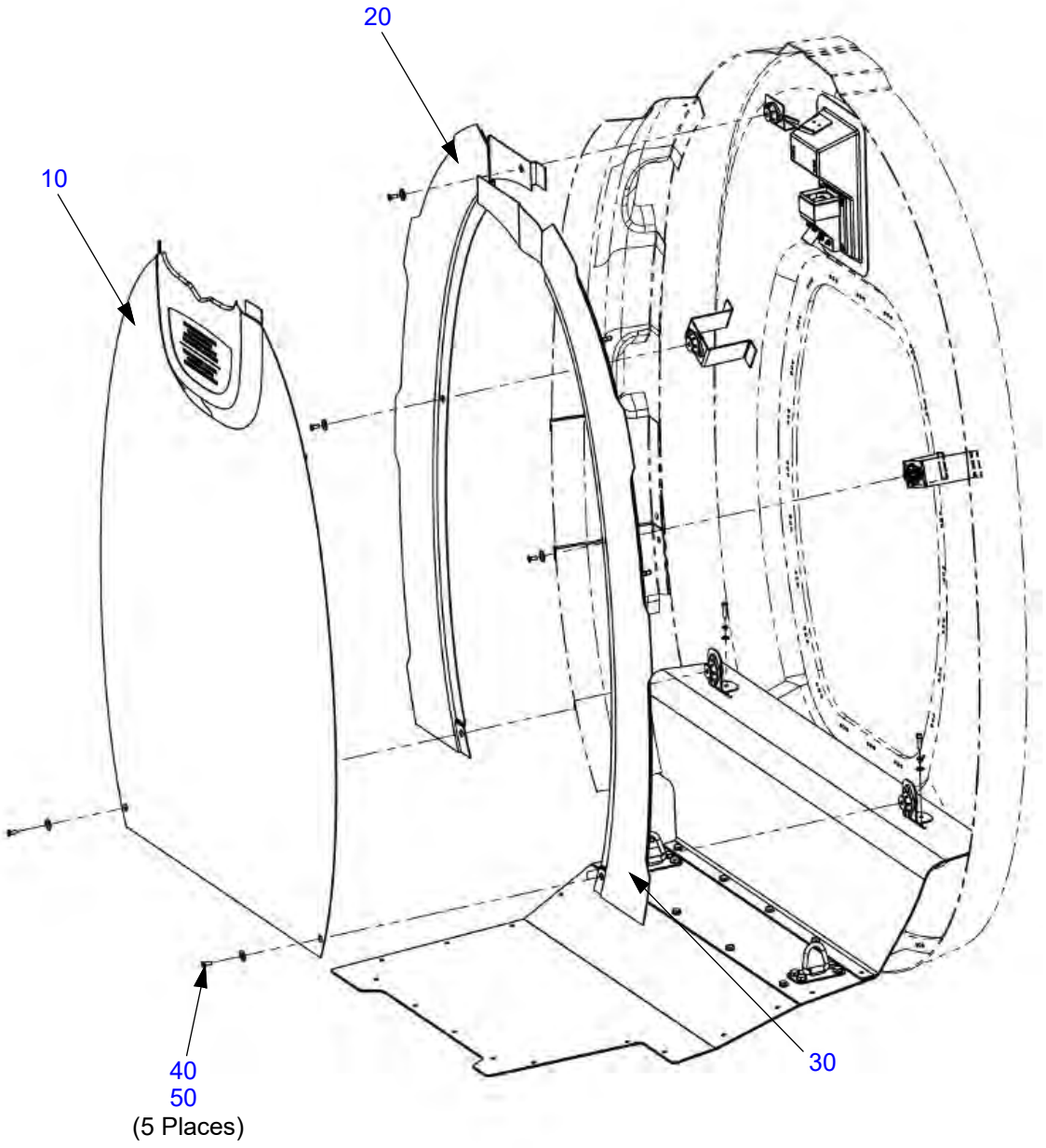

Table 25-50.3: Aft Finish Panel

Figure Item Number	Part Number	Part Name	Effectivity Code	Amount in Assy.
10	AK25520001	Assy, Aft Trim Panel, Inner W/ Outflow Aperture	K003 and On	1
20	AK25520002	Assembly, Periphery Ring, Aft Trim Panel, RH	K003 and On	1
30	AK25520003	Assembly, Periphery Ring, Aft Trim Panel, LH	K003 and On	1
40	MS24693-S49	Screw, Machine, C'sunk Ø .164 x 0.437	K003 and On	5
50	NAS1169C8L	Washer, Dimpled, CRES No. 8 x .016	K003 and On	5

ELT INSTALLATION

Figure 25-60.1: ELT Installation

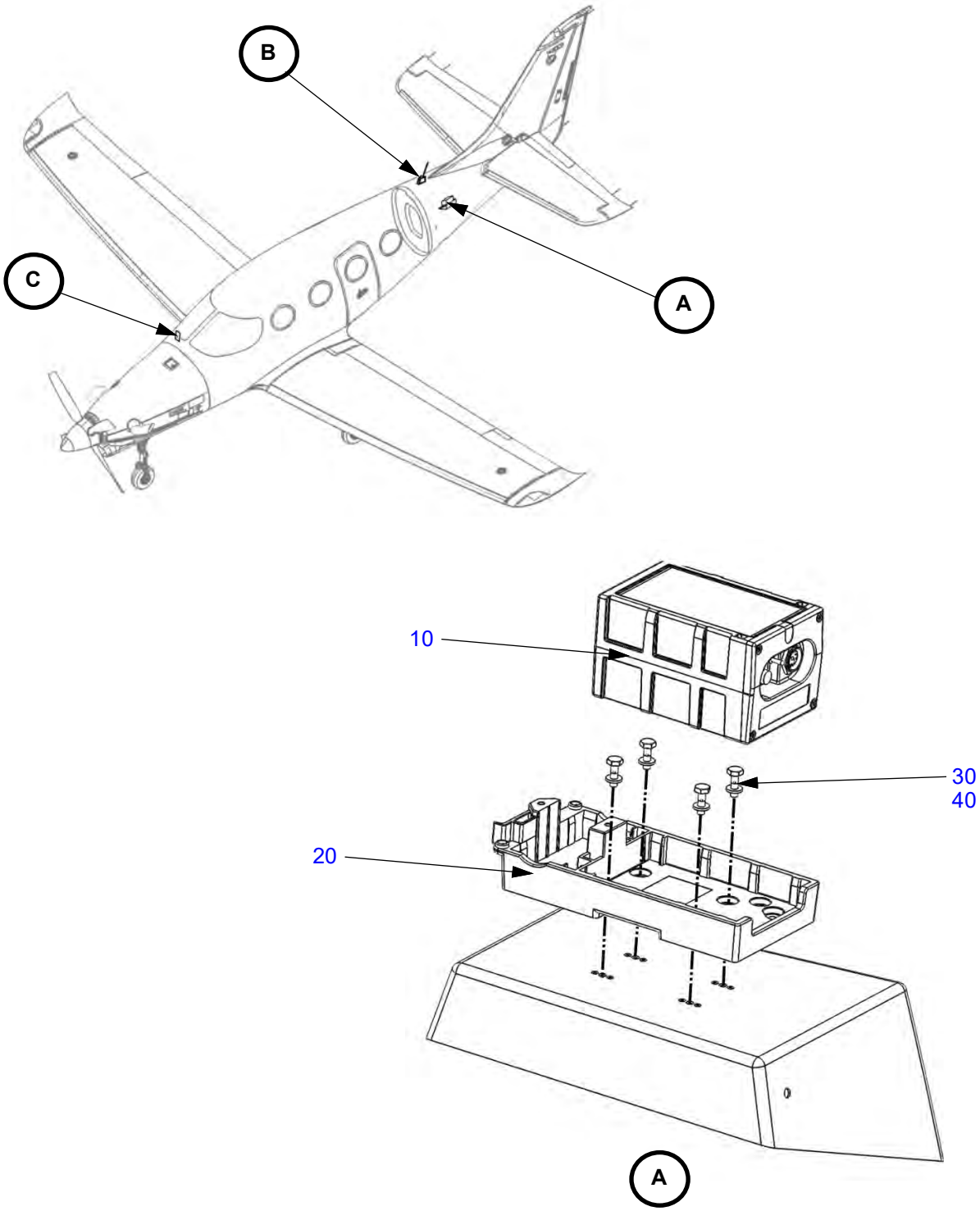

Figure 25-60.1: ELT Installation (Continued)

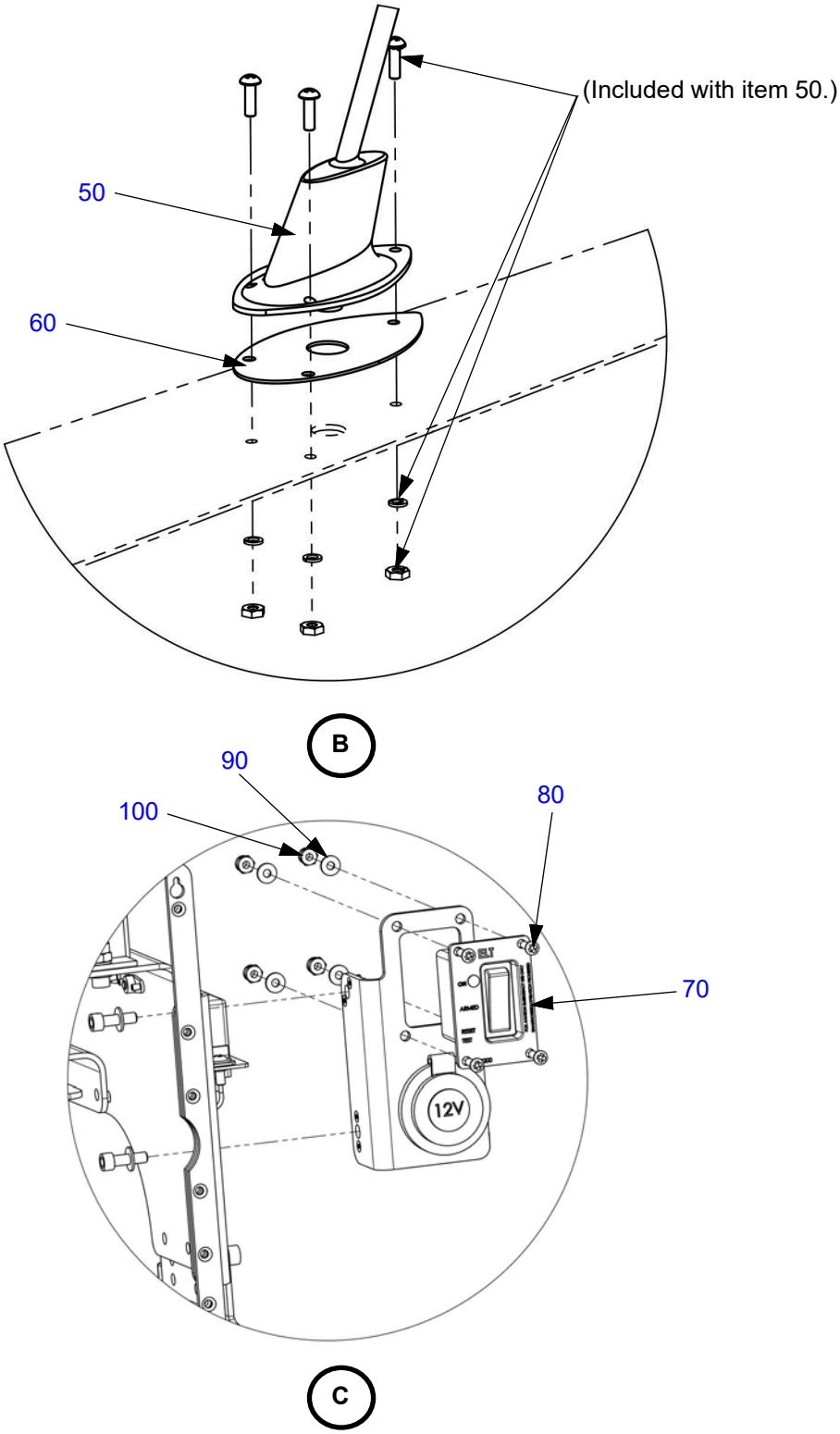

Table 25-60.1: ELT Installation

Figure Item Number	Part Number	Part Name	Effectivity Code	Amount in Assy.
10	S1851501-02	ELT Integra AF	K003 and On	1
20	S1850551-02	Integra Universal Mounting Bracket	K003 and On	1
30	AN3-5A	Bolt, 10-32 x 21/32" Undrilled	K003 and On	4
40	NAS1149F0363P	Washer, Flat #10 x .063	K003 and On	4
50	AV-300	Antenna, ELT	K003 and On	1
60	AG358000-17	Gasket - ELT Antenna	K003 and On	1
70	S1820513-18	Remote Control Panel, RC200 Kit	K003 and On	1
80	MS51957-16	Screw, Pan Head, .112 x .438 Lg., CRES	K003 and On	4
90	NAS1149FN416P	Washer, Flat #4 x .032	K003 and On	4
100	MS21045L04	Nut, Self-locking, Steel .112-40	K003 and On	4

This Page Intentionally Left Blank

INSULATION

Figure 25-80.1: Insulation

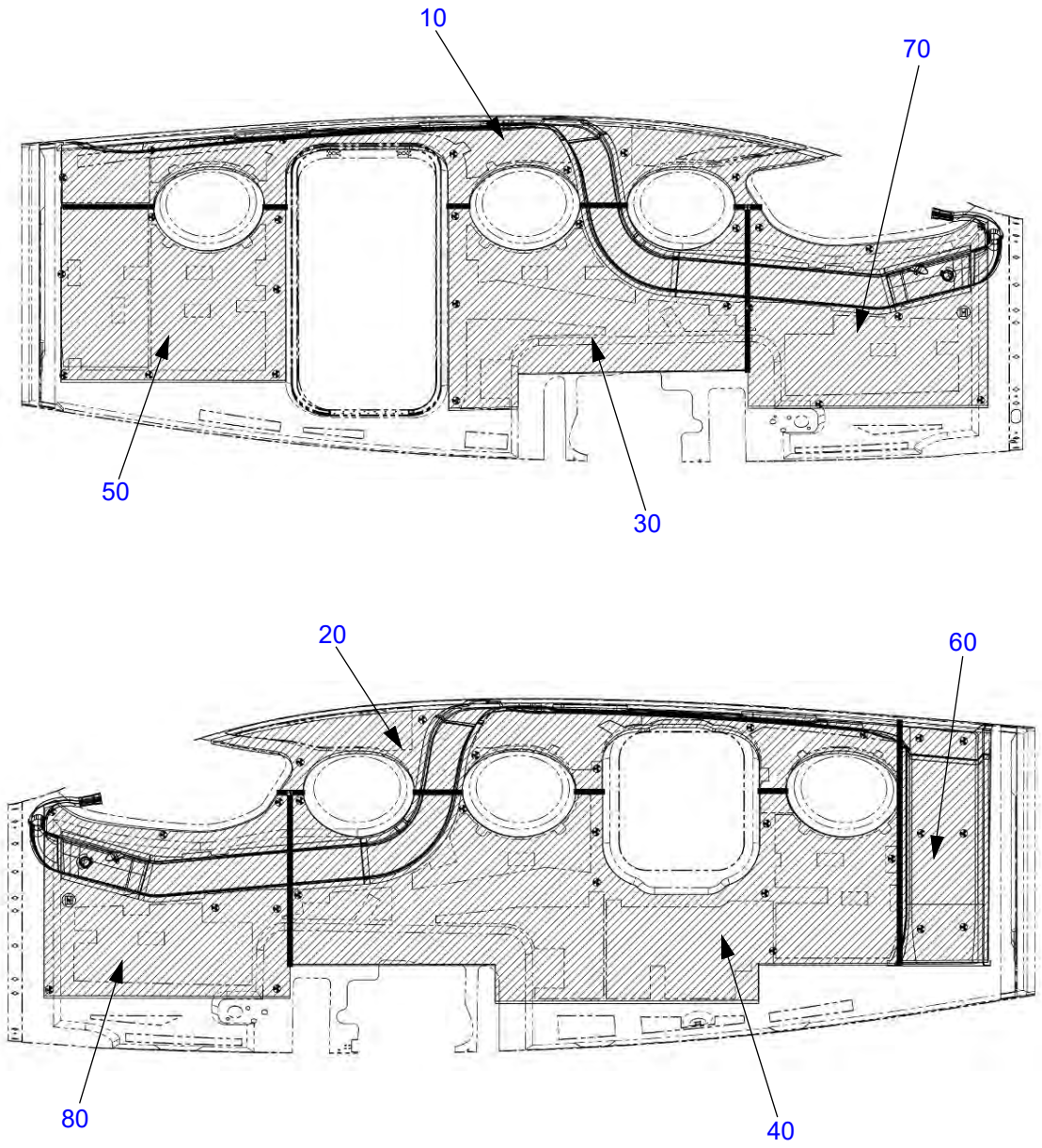

Figure 25-80.1: Insulation (Continued)

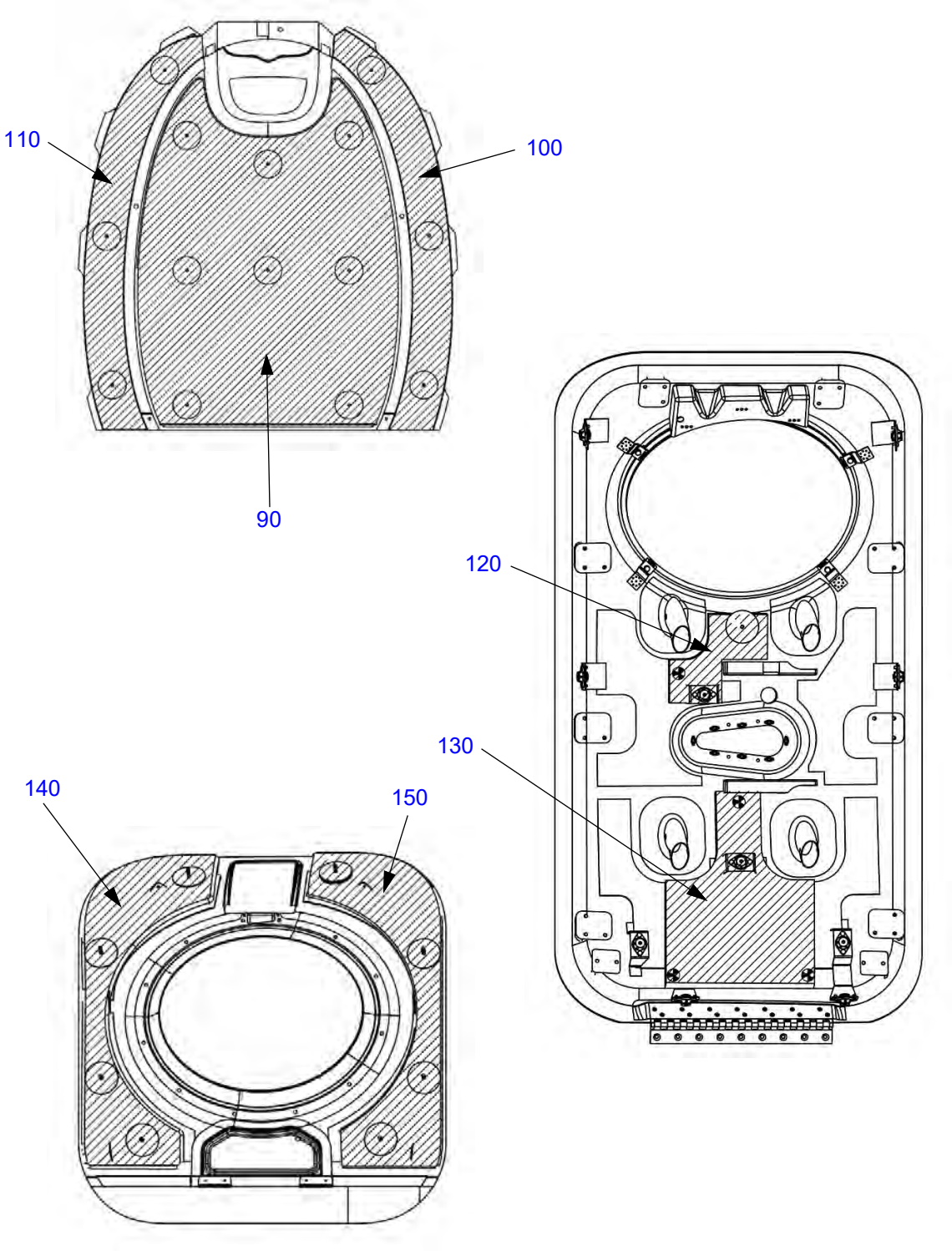

Table 25-80.1: Insulation

Figure Item Number	Part Number	Part Name	Effectivity Code	Amount in Assy.
10	60012-A5A-L1A-A5A	Cabin Insulation (Ear1607-4-611-31-101)	K003 and On	1
20	60012-A5A-L1A-A5A	Cabin Insulation (Ear1607-4-611-31-102)	K003 and On	1
30	60012-A5A-L1A-A5A	Cabin Insulation (Ear1607-4-611-31-103)	K003 and On	1
40	60012-A5A-L1A-A5A	Cabin Insulation (Ear1607-4-611-31-104)	K003 and On	1
50	60012-A5A-L1A-A5A	Cabin Insulation (Ear1607-4-611-31-105)	K003 and On	1
60	60012-A5A-L1A-A5A	Cabin Insulation (Ear1607-4-611-31-106)	K003 and On	1
70	60012-A5A-L1B-A5A	Cockpit Insulation (Ear1607-4-610-31-001)	K003 and On	1
80	60012-A5A-L1B-A5A2	Cockpit Insulation (Ear1607-4-610-31-002)	K003 and On	1
90	60012-A2CC	Insulation, Aft Trim Panel (Ear1607-4-612-31-201)	K003 and On	1
100	60012-A2CC	Insulation, Periphery Ring, Aft Trim Panel, Right (Ear1607-4-612-31-202)	K003 and On	1
110	60012-A2CC	Insulation, Periphery Ring, Aft Trim Panel, Left (Ear1607-4-612-31-203)	K003 and On	1
120	60012-A2CC	Insulation (Ear1607-4-612-31-221)	K003 and On	1
130	60012-A2CC	Insulation (Ear1607-4-612-31-222)	K003 and On	1
140	60012-A2CC	Insulation (Ear1607-4-612-31-211)	K003 and On	1
150	60012-A2CC	Insulation (Ear1607-4-612-31-212)	K003 and On	1
*160	EAR17948-100-890-01-001	Discs For Spikes	K003 and On	A/R

Figure Item Number	Part Number	Part Name	Effectivity Code	Amount in Assy.
*170	EAR1161-100-890-03-250	2.5" Adhesive Spikes	K003 and On	A/R
*180	LT-16	Lt-16 Fabrication And Repair Tape	K003 and On	A/R

* Item not illustrated.

CHAPTER
26

Fire Protection

This Page Intentionally Left Blank

Table of Contents
and
List of Effective Pages

Chapter/Section	Page Number	Effective Date
26-Title	Page 1	03 Apr 2020
26-Title	Page 2	03 Apr 2020
26-LOEP	Page 1	13 Jan 2023
26-LOEP	Page 2	03 Apr 2020
26-TOC	Page 1	03 Apr 2020
26-TOC	Page 2	03 Apr 2020
Extinguishing		
26-20	Page 1	13 Jan 2023
26-20	Page 2	13 Jan 2023,

This Page Intentionally Left Blank

CHAPTER 26

Table of Contents

List of Effective Pages ..... 26-LOEP / Page 1
Table of Contents ..... 26-TOC / Page1

Paragraph **Page Number**

Fire Extinguisher

Figure 26-20.1: Fire Extinguishing ..... 26-20 / Page 1
Table 26-20.1: Fire Extinguishing ..... 26-20 / Page 2

This Page Intentionally Left Blank

EXTINGUISHING

Figure 26-20.1: Fire Extinguishing

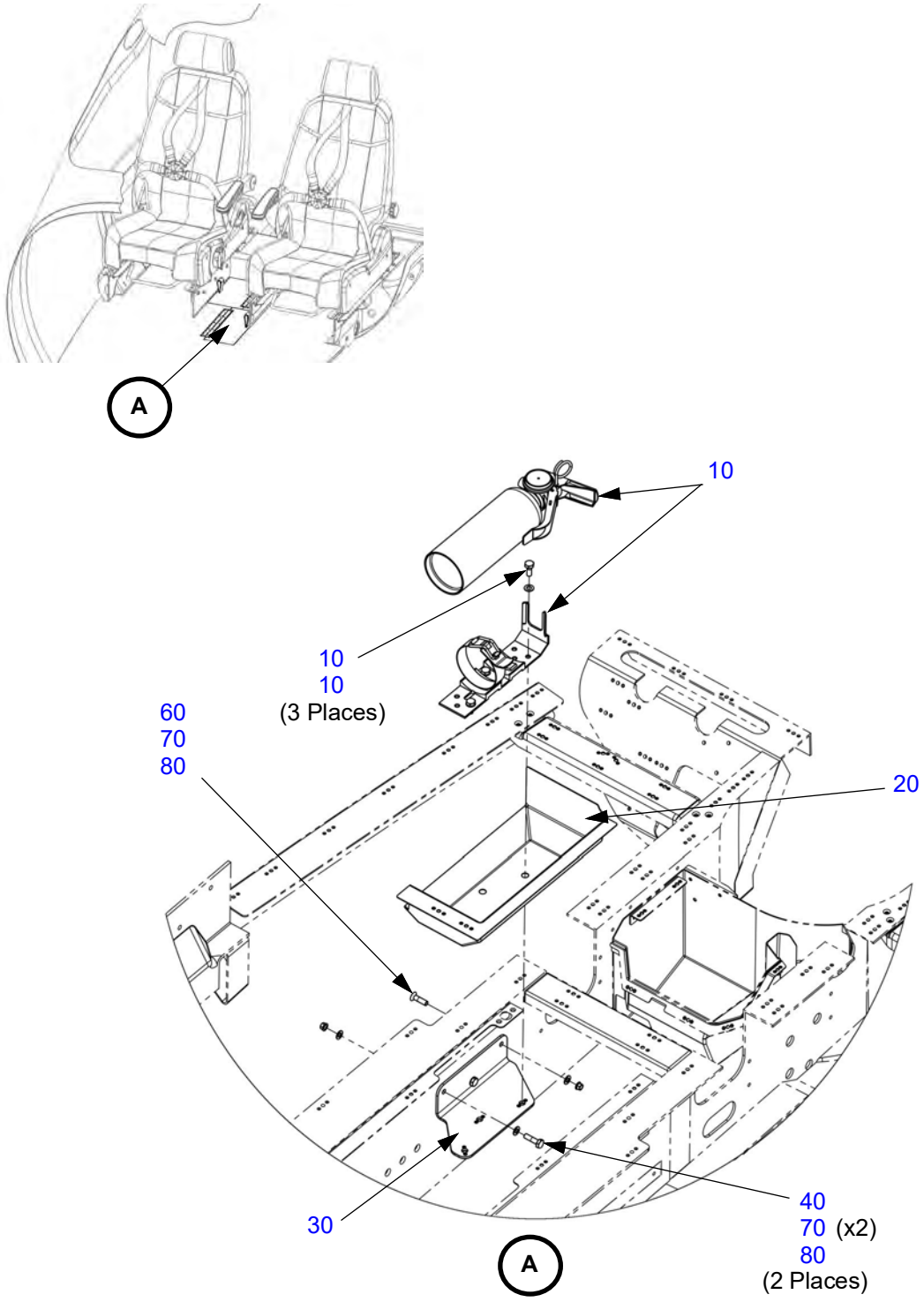

Table 26-20.1: Fire Extinguishing

Figure Item Number	Part Number	Part Name	Effectivity Code	Amount in Assy.
10	A344T	Fire Extinguisher	K003 and On	1
20	AK26202000	Tray, FOD, Fire Extinguisher, Assy	K003 and On	1
30	AK26201000	Bracket, Fire Extinguisher, Assy	K003 and On	1
40	AN4-7A	Bolt, 1/4-28 x 29/32" Undrilled	K003 and On	2
50	AN4-5A	Bolt, 1/4-28 x 21/32" Undrilled	K003 and On	3
60	MS24694-S101	Screw, Machine, C'sunk Ø .250 x 29/32	K003 and On	1
70	NAS1149F0432P	Washer, Flat 1/4 x .032	K003 and On	8
80	MS21042L4	Nut, Self-locking, 450°, Reduced 1/4-28	K003 and On	3

CHAPTER
27

Flight Controls

This Page Intentionally Left Blank

Table of Contents
and
List of Effective Pages

Chapter/Section	Page Number	Effective Date
27-Title	Page 1	03 Apr 2020
27-Title	Page 2	03 Apr 2020
27-LOEP	Page 1	26 Mar 2024
27-LOEP	Page 2	26 Mar 2024
27-LOEP	Page 3	26 Mar 2024
27-LOEP	Page 4	03 Apr 2020
27-TOC	Page 1	03 Apr 2020
27-TOC	Page 2	03 Apr 2020
	Aileron and Tab	
27-10	Page 1	03 Apr 2020
27-10	Page 2	03 Apr 2020
27-10	Page 3	03 Apr 2020
27-10	Page 4	03 Apr 2020
27-10	Page 5	03 Apr 2020
27-10	Page 6	03 Apr 2020
27-10	Page 7	03 Apr 2020
27-10	Page 8	03 Apr 2020
27-10	Page 9	03 Apr 2020
27-10	Page 10	03 Apr 2020
27-10	Page 11	03 Apr 2020
27-10	Page 12	13 Jan 2023
27-10	Page 13	03 Apr 2020
27-10	Page 14	13 Jan 2023
27-10	Page 15	03 Apr 2020
27-10	Page 16	03 Apr 2020
27-10	Page 17	13 Jan 2023
27-10	Page 18	03 Apr 2020
27-10	Page 19	26 Mar 2024
27-10	Page 20	03 Apr 2020
27-10	Page 21	03 Apr 2020
27-10	Page 22	03 Apr 2020
	Rudder and Tab	
27-20	Page 1	03 Apr 2020
27-20	Page 2	03 Apr 2020
27-20	Page 3	03 Apr 2020
27-20	Page 4	03 Apr 2020
27-20	Page 5	03 Apr 2020

27-20 ..... Page 6 ..... 03 Apr 2020
27-20 ..... Page 7 ..... 03 Apr 2020
27-20 ..... Page 8 ..... 03 Apr 2020
27-20 ..... Page 9 ..... 03 Apr 2020
27-20 ..... Page 10 ..... 03 Apr 2020
27-20 ..... Page 11 ..... 03 Apr 2020
27-20 ..... Page 12 ..... 03 Apr 2020
27-20 ..... Page 13 ..... 14 Jul 2021
27-20 ..... Page 14 ..... 03 Apr 2020
27-20 ..... Page 15 ..... 14 Jul 2021
27-20 ..... Page 16 ..... 03 Apr 2020
27-20 ..... Page 17 ..... 03 Apr 2020
27-20 ..... Page 18 ..... 03 Apr 2020
27-20 ..... Page 19 ..... 03 Apr 2020
27-20 ..... Page 20 ..... 03 Apr 2020
27-20 ..... Page 21 ..... 26 Mar 2024
27-20 ..... Page 22 ..... 03 Apr 2020

Elevator and Tab

27-30 ..... Page 1 ..... 03 Apr 2020
27-30 ..... Page 2 ..... 03 Apr 2020
27-30 ..... Page 3 ..... 03 Apr 2020
27-30 ..... Page 4 ..... 03 Apr 2020
27-30 ..... Page 5 ..... 03 Apr 2020
27-30 ..... Page 6 ..... 03 Apr 2020
27-30 ..... Page 7 ..... 03 Apr 2020
27-30 ..... Page 8 ..... 03 Apr 2020
27-30 ..... Page 9 ..... 03 Apr 2020
27-30 ..... Page 10 ..... 03 Apr 2020
27-30 ..... Page 11 ..... 03 Apr 2020
27-30 ..... Page 12 ..... 03 Apr 2020
27-30 ..... Page 13 ..... 03 Apr 2020
27-30 ..... Page 14 ..... 03 Apr 2020
27-30 ..... Page 15 ..... 03 Apr 2020
27-30 ..... Page 16 ..... 03 Apr 2020
27-30 ..... Page 17 ..... 03 Apr 2020
27-30 ..... Page 18 ..... 03 Apr 2020
27-30 ..... Page 19 ..... 03 Apr 2020
27-30 ..... Page 20 ..... 03 Apr 2020
27-30 ..... Page 21 ..... 03 Apr 2020
27-30 ..... Page 22 ..... 26 Mar 2024

Flaps

27-50 ..... Page 1 ..... 03 Apr 2020
27-50 ..... Page 2 ..... 03 Apr 2020
27-50 ..... Page 3 ..... 13 Jan 2023
27-50 ..... Page 4 ..... 13 Jan 2023

27-50 ..... Page 5 ..... 03 Apr 2020
27-50 ..... Page 6 ..... 13 Jan 2023
27-50 ..... Page 7 ..... 26 Mar 2024
27-50 ..... Page 8 ..... 26 Mar 2024
27-50 ..... Page 9 ..... 26 Mar 2024
27-50 ..... Page 10 ..... 26 Mar 2024
27-50 ..... Page 11 ..... 26 Mar 2024
27-50 ..... Page 12 ..... 26 Mar 2024
27-50 ..... Page 13 ..... 26 Mar 2024
27-50 ..... Page 14 ..... 26 Mar 2024
27-50 ..... Page 15 ..... 26 Mar 2024
27-50 ..... Page 16 ..... 26 Mar 2024
27-50 ..... Page 17 ..... 26 Mar 2024
27-50 ..... Page 18 ..... 26 Mar 2024

This Page Intentionally Left Blank

CHAPTER 27

Table of Contents

List of Effective Pages ..... 27-LOEP / Page 1
Table of Contents ..... 27-TOC / Page1

Paragraph **Page Number**

Aileron and Tab

Figure 27-10.1: Aileron Cables ..... 27-10 / Page 1
Table 27-10.1: Aileron Cables ..... 27-10 / Page 2
Figure 27-10.2: Aileron Pulleys ..... 27-10 / Page 3
Table 27-10.2: Aileron Pulleys ..... 27-10 / Page 9
Figure 27-10.3: Aileron Bellcranks ..... 27-10 / Page 11
Table 27-10.3: Aileron Bellcranks ..... 27-10 / Page 16
Figure 27-10.4: Aileron Trim Tab Servo ..... 27-10 / Page 18
Table 27-10.4: Aileron Trim Tab Servo ..... 27-10 / Page 19
Figure 27-10.5: Aileron Fairleads ..... 27-10 / Page 20
Table 27-10.5: Aileron Fairleads ..... 27-10 / Page 21

Rudder and Tab

Figure 27-20.1: Rudder Cables ..... 27-20 / Page 1
Table 27-20.1: Rudder Cables ..... 27-20 / Page 3
Figure 27-20.2: Rudder Cable Seals ..... 27-20 / Page 4
Table 27-20.2: Rudder Cable Seals ..... 27-20 / Page 6
Figure 27-20.3: Rudder Pulleys ..... 27-20 / Page 7
Table 27-20.3: Rudder Pulleys ..... 27-20 / Page 10
Figure 27-20.4: Rudder Linkage and Bellcrank ..... 27-20 / Page 12
Table 27-20.4: Rudder Linkage and Bellcrank ..... 27-20 / Page 15
Figure 27-20.5: Rudder Pedals ..... 27-20 / Page 17
Table 27-20.5: Rudder Pedals ..... 27-20 / Page 19
Figure 27-20.6: Rudder Trim Tab Servo ..... 27-20 / Page 20
Table 27-20.6: Rudder Trim Tab Servo ..... 27-20 / Page 21

Elevator and Tab

Figure 27-30.1: Elevator Cables ..... 27-30 / Page 1
Table 27-30.1: Elevator Cables ..... 27-30 / Page 3
Figure 27-30.2: Elevator Cable Seals ..... 27-30 / Page 4
Table 27-30.2: Elevator Cable Seals ..... 27-30 / Page 6
Figure 27-30.3: Elevator Pulleys ..... 27-30 / Page 7

Table 27-30.3: Elevator Pulleys ..... 27-30 / Page 13

Figure 27-30.4: Elevator Torque Tube ..... 27-30 / Page 15
Table 27-30.4: Elevator Torque Tube ..... 27-30 / Page 17
Figure 27-30.5: Control Yokes ..... 27-30 / Page 18
Table 27-30.5: Control Yokes ..... 27-30 / Page 20
Figure 27-30.6: Elevator Trim Tab Servo ..... 27-30 / Page 21
Table 27-30.6: Elevator Trim Tab Servo ..... 27-30 / Page 22

Flaps

Figure 27-50.1: Flap Actuator ..... 27-50 / Page 1
Table 27-50.1: Flap Actuator ..... 27-50 / Page 6
Figure 27-50.2: Flap Torque Tube ..... 27-50 / Page 8
Table 27-50.2: Flap Torque Tube ..... 27-50 / Page 12
Figure 27-50.3: Flap Control (SN: K003-K010) ..... 27-50 / Page 14
Table 27-50.3: Flap Control (SN: K003-K010) ..... 27-50 / Page 15
Figure 27-50.4: Flap Control (SN: K011 and On) ..... 27-50 / Page 16
Table 27-50.4: Flap Control (SN: K011 and On) ..... 27-50 / Page 17

AILERON AND TAB

Figure 27-10.1: Aileron Cables

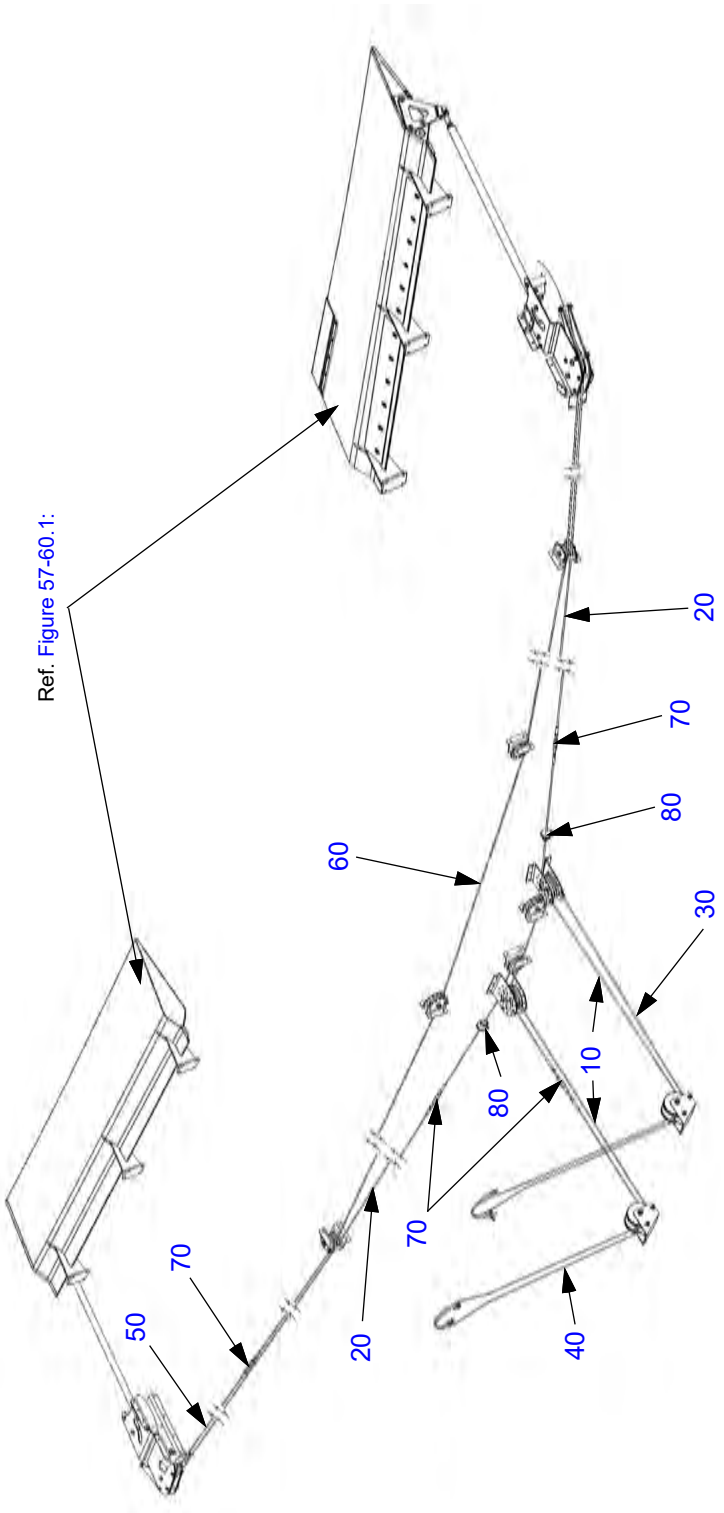

Table 27-10.1: Aileron Cables

Figure Item Number	Part Number	Part Name	Effectivity Code	Amount in Assy.
10	AK27107101	Cable Assy, Aileron, Yoke To Wing	K003 and On	2
20	AK27107102	Cable Assy, Aileron, Wing To Tip	K003 and On	2
30	AK27107201	Cable Assy, Aileron, Yoke To Floorboard	K003 and On	1
40	AK27107202	Cable Assy, Aileron, Floorboard Crossover	K003 and On	1
50	AK27107301	Cable Assy, Aileron Crossover, Right	K003 and On	1
60	AK27107302	Cable Assy, Aileron Crossover, Left	K003 and On	1
70	MS21251-B5S	Turnbuckle, Brass, Short 1/4-28 Thread	K003 and On	4
80	AK99005001	Control Cable Seal	K003 and On	2

Figure 27-10.2: Aileron Pulleys

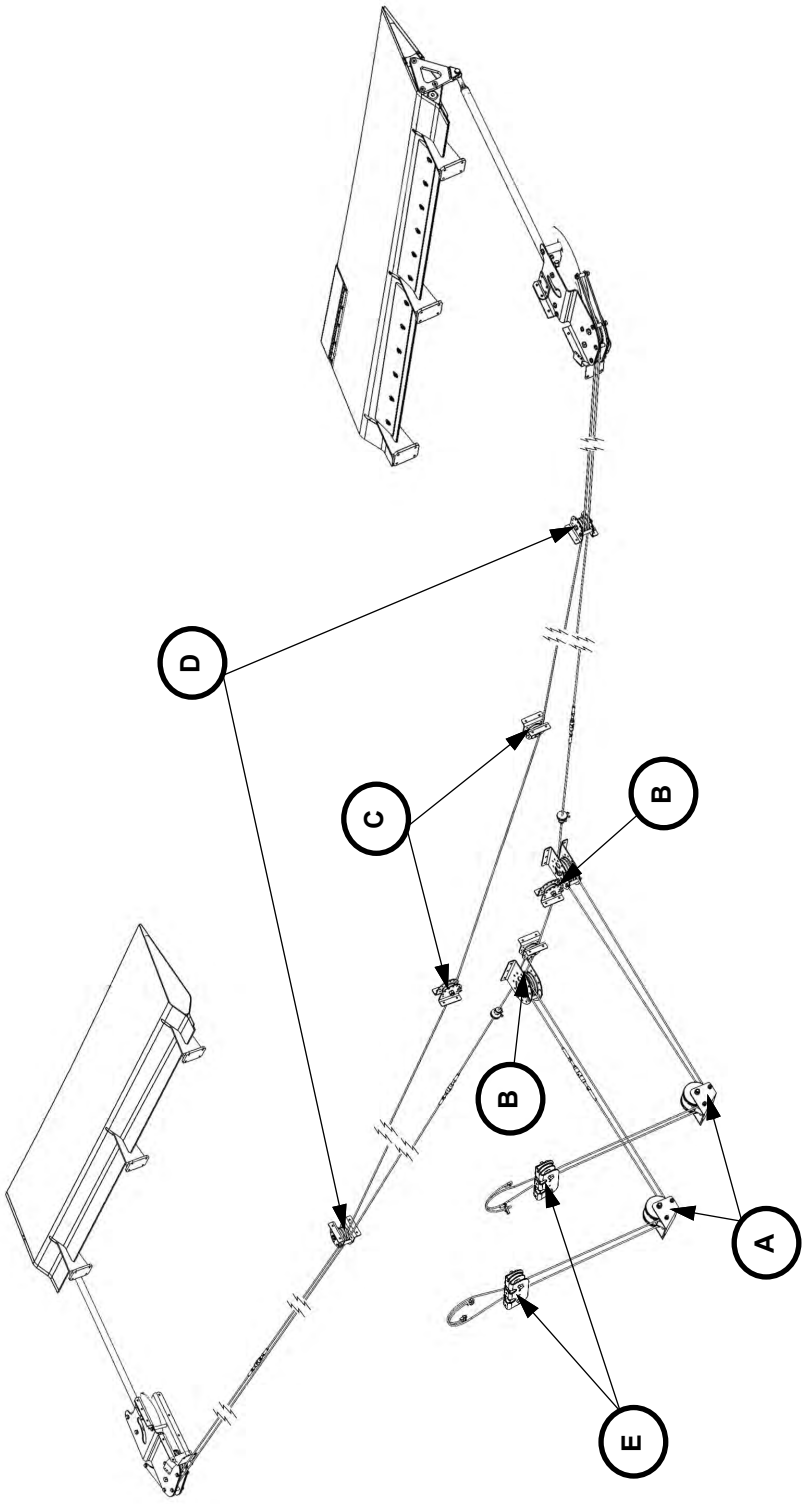

Figure 27-10.2: Aileron Pulleys (Continued)

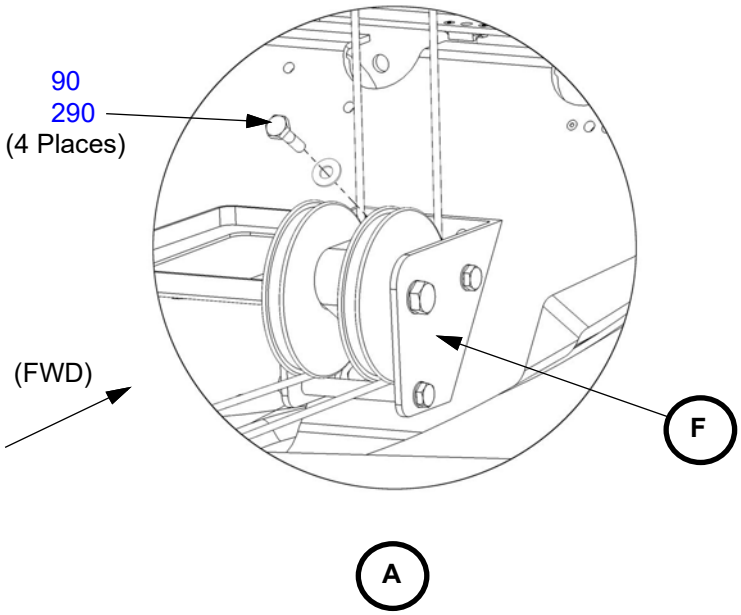

Right side shown, left side opposite.

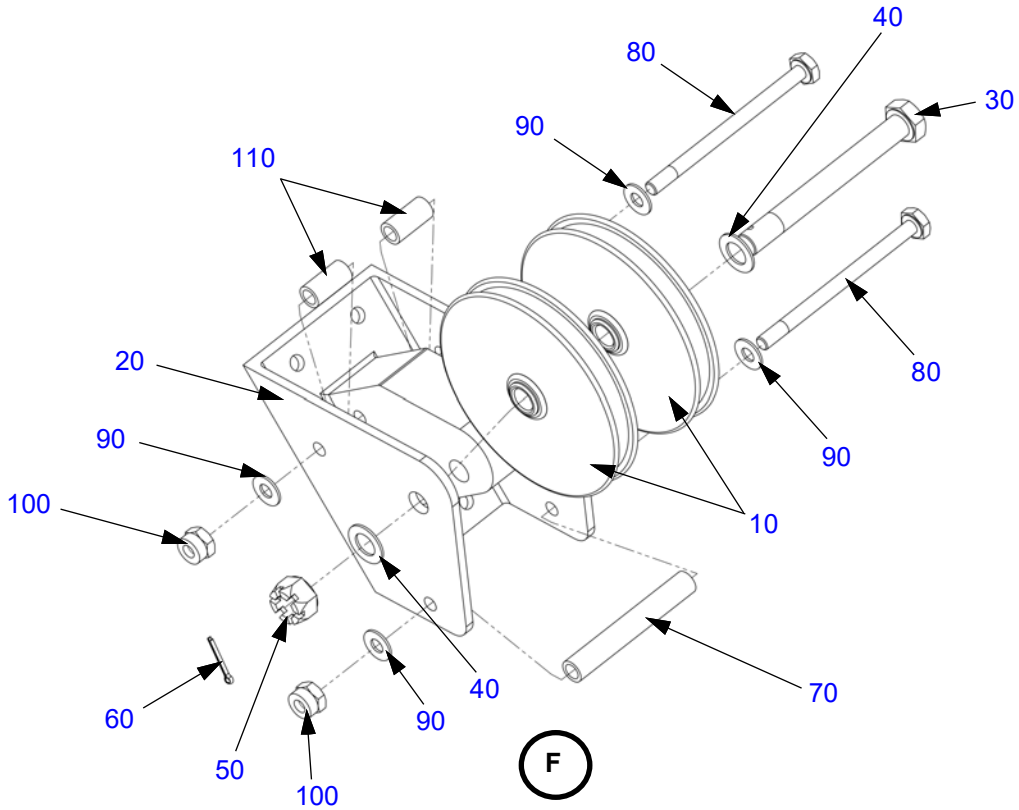

Figure 27-10.2: Aileron Pulleys (Continued)

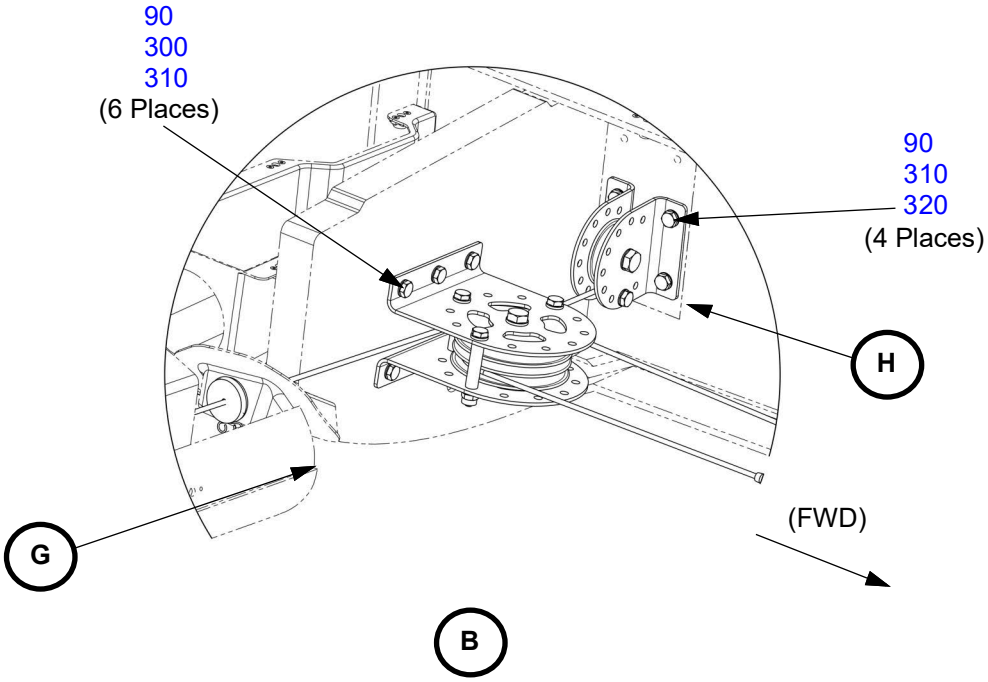

Right side shown, left side opposite.

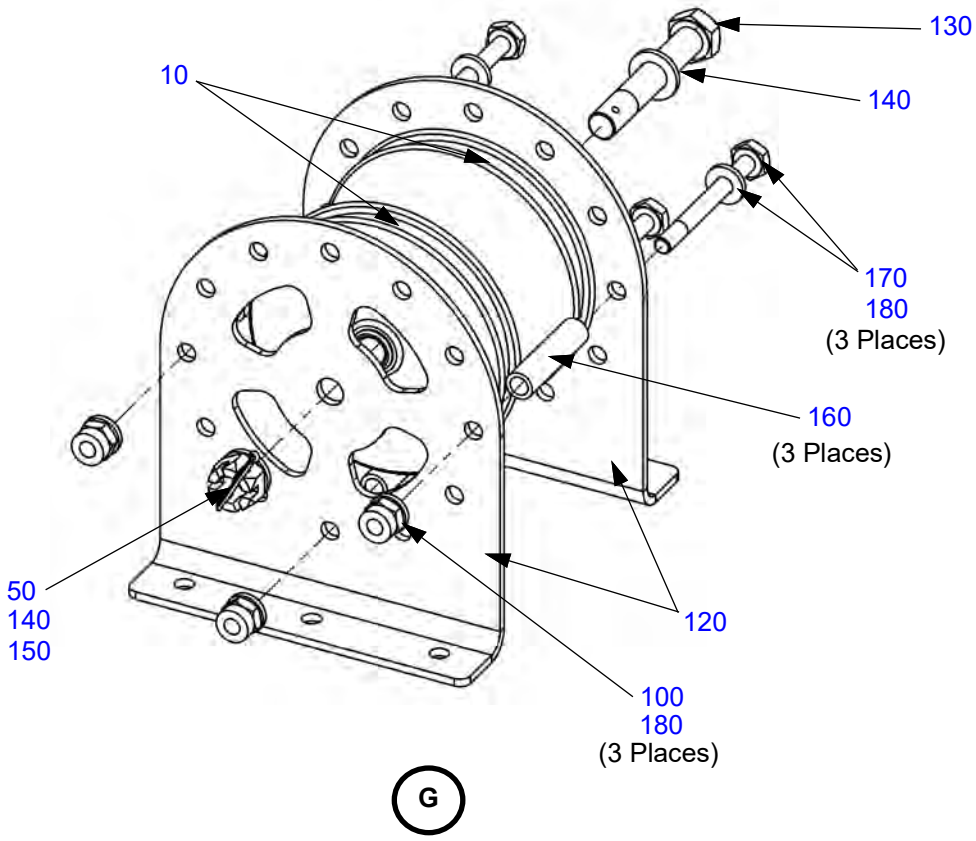

Figure 27-10.2: Aileron Pulleys (Continued)

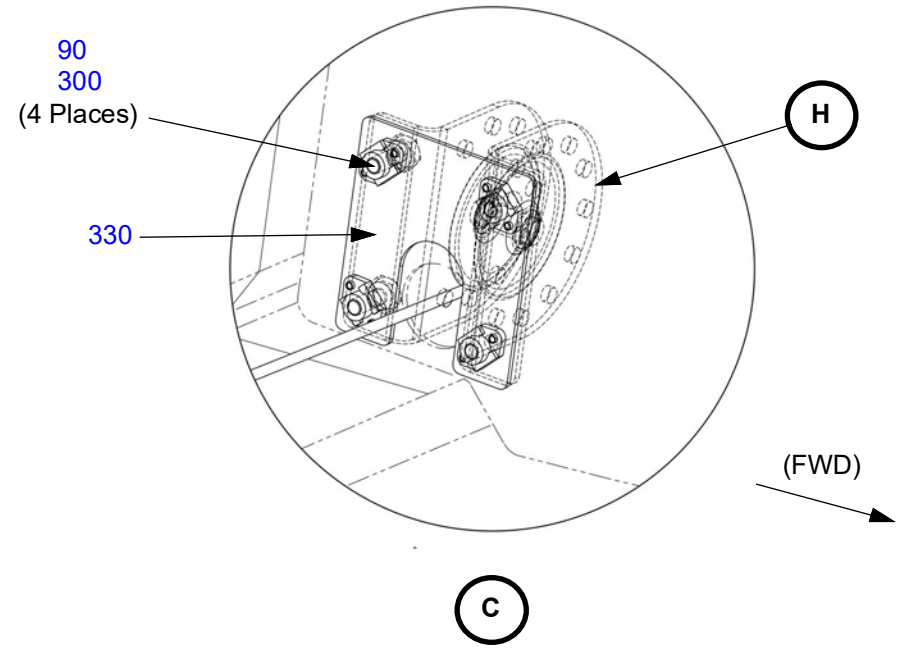

Right side shown, left side opposite.

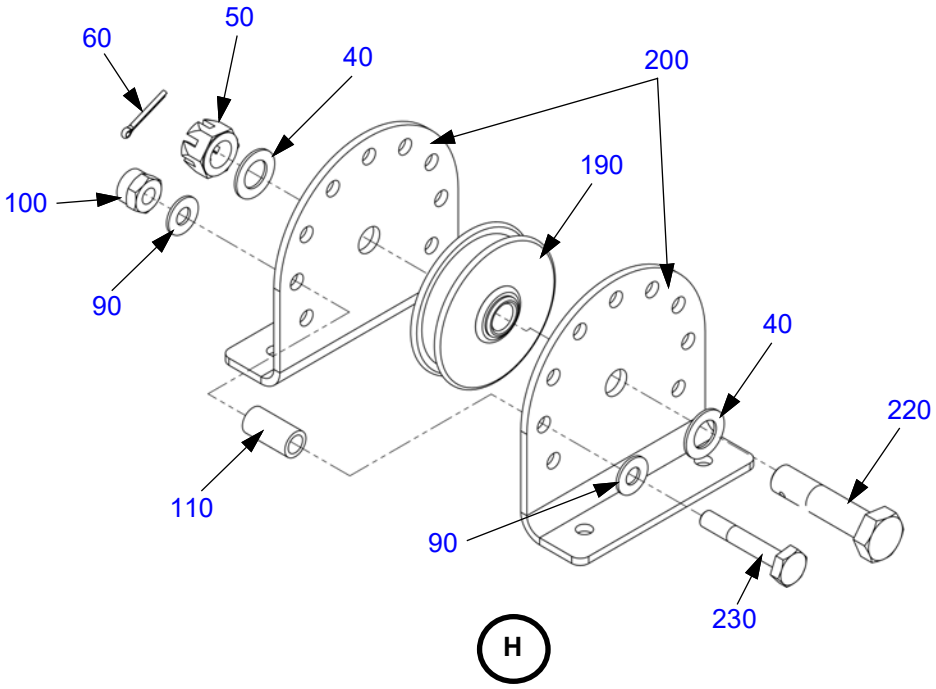

Figure 27-10.2: Aileron Pulleys (Continued)

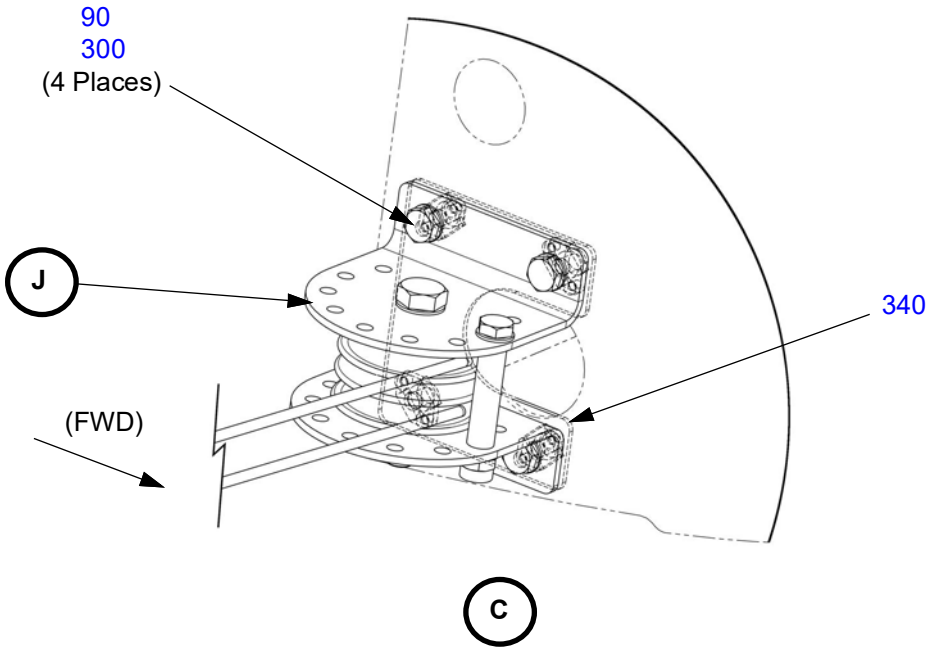

Right side shown, left side opposite.

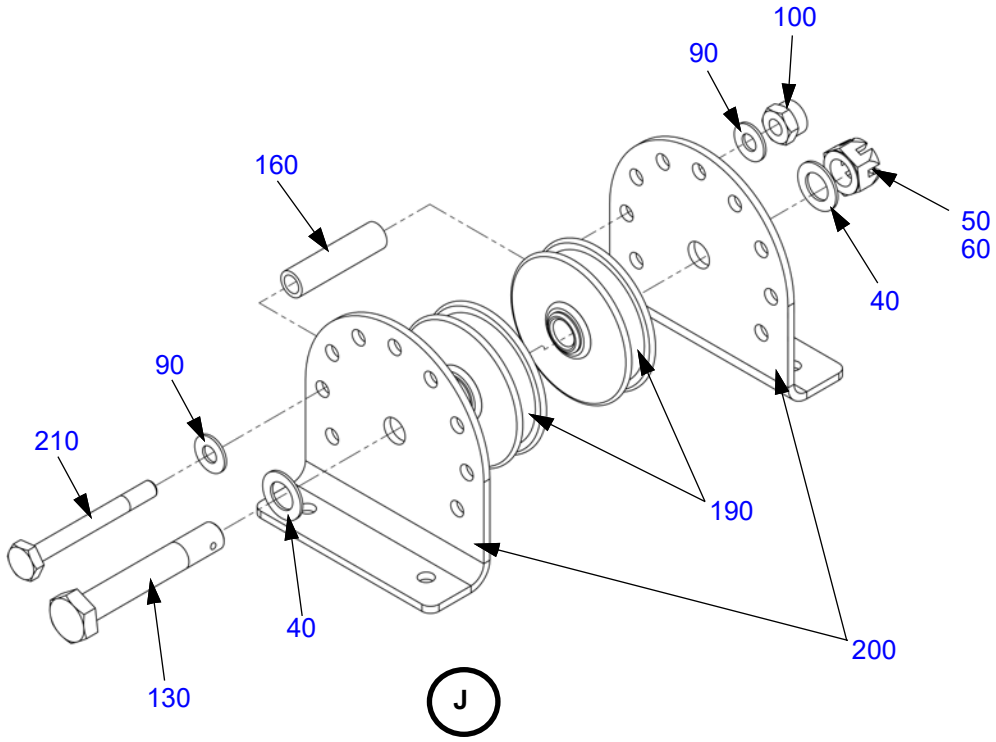

Figure 27-10.2: Aileron Pulleys (Continued)

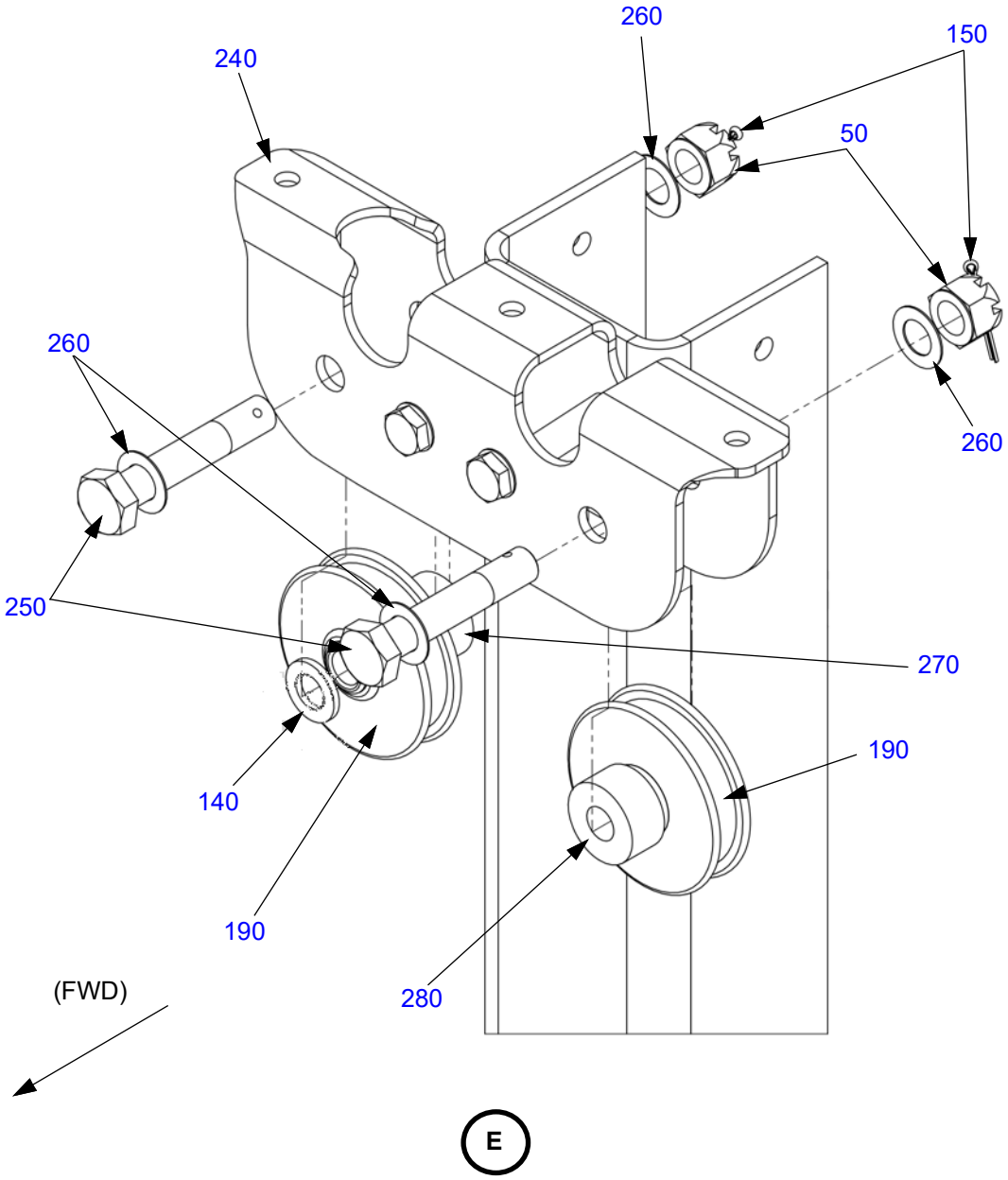

Table 27-10.2: Aileron Pulleys

Figure Item Number	Part Number	Part Name	Effectivity Code	Amount in Assy.
10	MS20220-2	Pulley, Groove, Nonmetallic Sheave 3.000 OD	K003 and On	8
20	PK27108301	Pulley Block, Ailerons	K003 and On	2
30	AN5-26	Bolt, 5/16-24 x 2-27/32" Drilled Shank	K003 and On	2
40	NAS1149F0532P	Washer, Flat 5/16 x .032	K003 and On	16
50	AN310-5	Nut, Castellated, Steel 5/16-24	K003 and On	10
60	MS24665-132	Pin, Cotter, Cad Steel Ø .062 x .50	K003 and On	8
70	NAS43DD3-136N	Spacer, Aluminum .214 ID x .312 OD x 2.125	K003 and On	2
80	AN3-26A	Bolt, 10-32 x 2-25/32" Undrilled	K003 and On	4
90	NAS1149F0332P	Washer, Flat #10 x .032	K003 and On	76
100	MS21044N3	Nut, Self-locking, Steel 10-32	K003 and On	16
110	NAS43DD3-40N	Spacer, Aluminum .214 ID x .312 OD x .625	K003 and On	8
120	PK27002500	Pulley Bracket, Universal	K003 and On	4
130	AN5-17	Bolt, 5/16-24 x 1-31/32" Drilled Shank	K003 and On	4
140	NAS1149F0563P	Washer, Flat 5/16 x .063	K003 and On	6
150	MS24665-134	Pin, Cotter, Cad Steel Ø .062 x .75	K003 and On	6
160	NAS43DD3-80N	Spacer, Aluminum .214 ID x .312 OD x 1.250	K003 and On	8
170	AN3-17A	Bolt, 10-32 x 1-29/32" Undrilled	K003 and On	6
180	NAS1149F0363P	Washer, Flat #10 x .063	K003 and On	12
190	MS20220-1	Pulley, Groove, Nonmetallic Sheave 1.750 OD	K003 and On	12
200	PK27002300	Pulley Bracket, Universal, Small	K003 and On	12
210	AN3-16A	Bolt, 10-32 x 1-25/32" Undrilled	K003 and On	2
220	AN5-12	Bolt, 5/16-24 x 1-11/32" Drilled Shank	K003 and On	4
230	AN3-11A	Bolt, 10-32 x 1-5/32" Undrilled	K003 and On	4

Figure Item Number	Part Number	Part Name	Effectivity Code	Amount in Assy.
240	PK27002600	Bracket, Double Pulley, Shelf Lwr	K003 and On	2
250	AN5-15	Bolt, 5/16-24 x 1-23/32" Drilled Shank	K003 and On	4
260	NAS1149F0516P	Washer, Flat 5/16 x .016	K003 and On	8
270	PK27002601	Pulley Spacer, 3/4" OD x 5/16" ID x 5/16" Long	K003 and On	2
280	PK27002602	Pulley Spacer, 3/4" OD x 5/16 ID" 3/8" Long	K003 and On	2
290	AN3-6A	Bolt, 10-32 x 25/32" Undrilled	K003 and On	8
300	AN3-4A	Bolt, 10-32 x 17/32" Undrilled	K003 and On	20
310	MS21042L3	Nut, Self-locking, 450°, Reduced #10-32	K003 and On	20
320	AN3-7A	Bolt, 10-32 x 29/32" Undrilled	K003 and On	8
330	AK27100002	Back Plate Assy, Aileron Pulley 1	K003 and On	2
340	AK27100001	Back Plate Assy, Aileron Pulley 2	K003 and On	2

Figure 27-10.3: Aileron Bellcranks

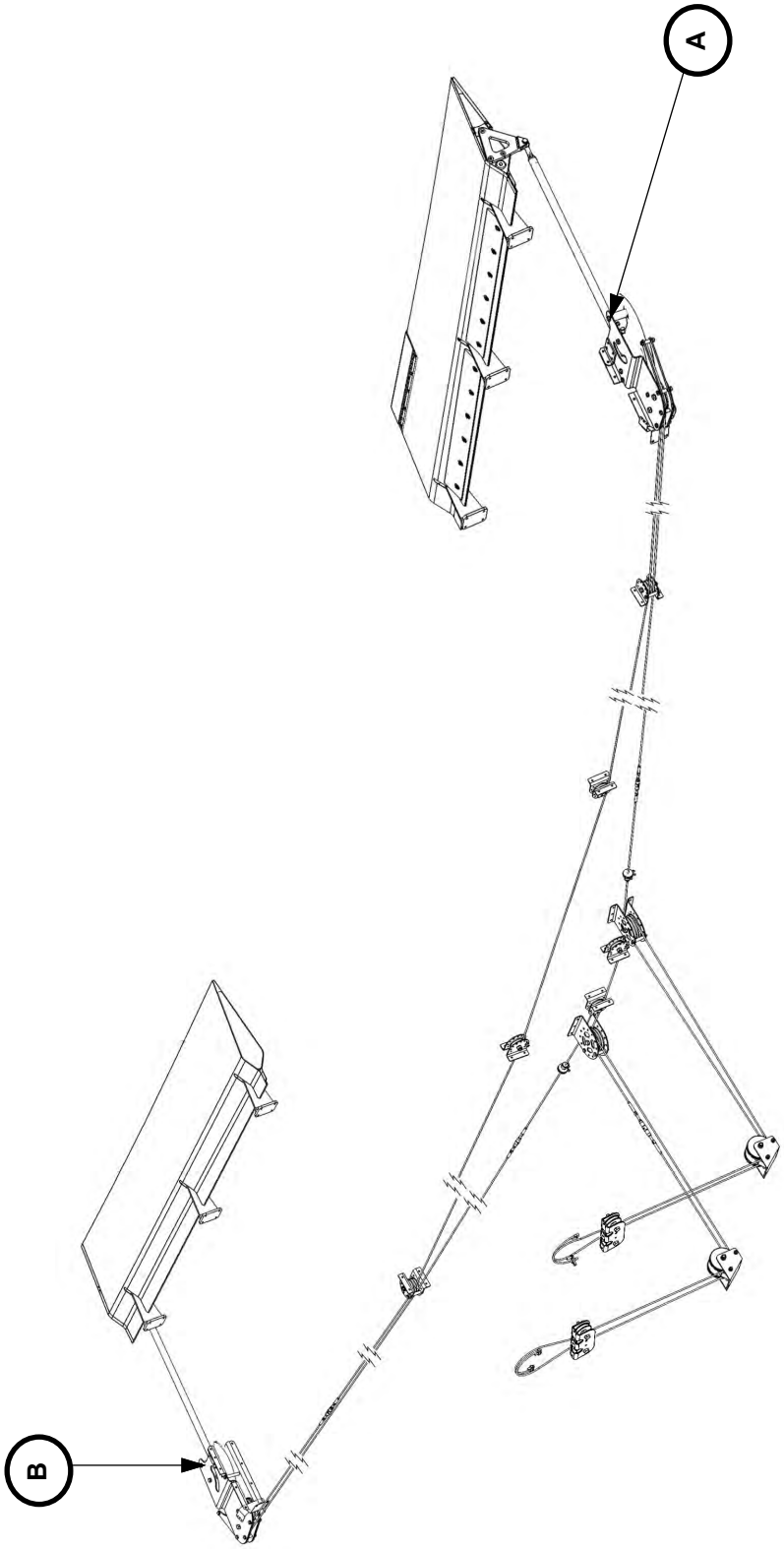

Figure 27-10.3: Aileron Bellcranks (Continued)

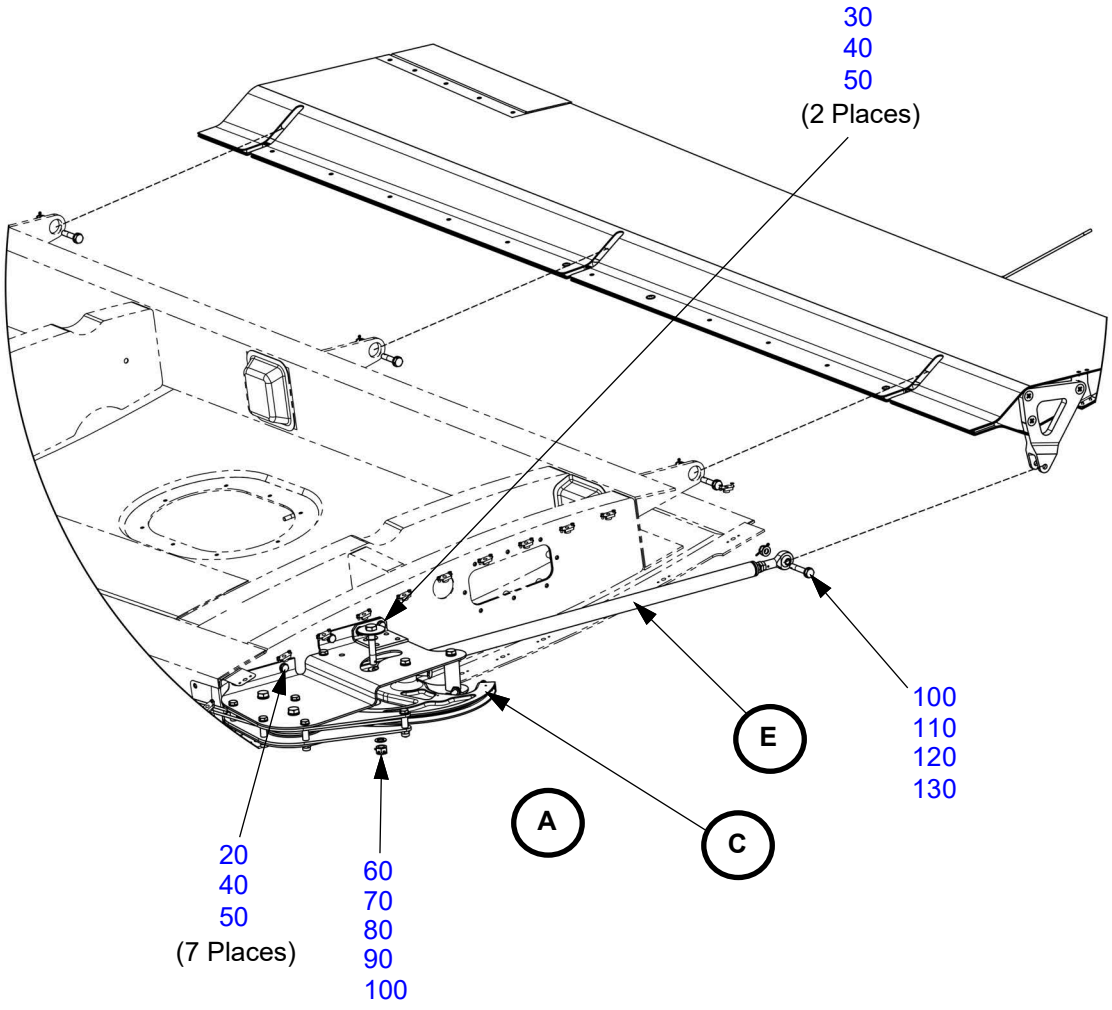

Figure 27-10.3: Aileron Bellcranks (Continued)

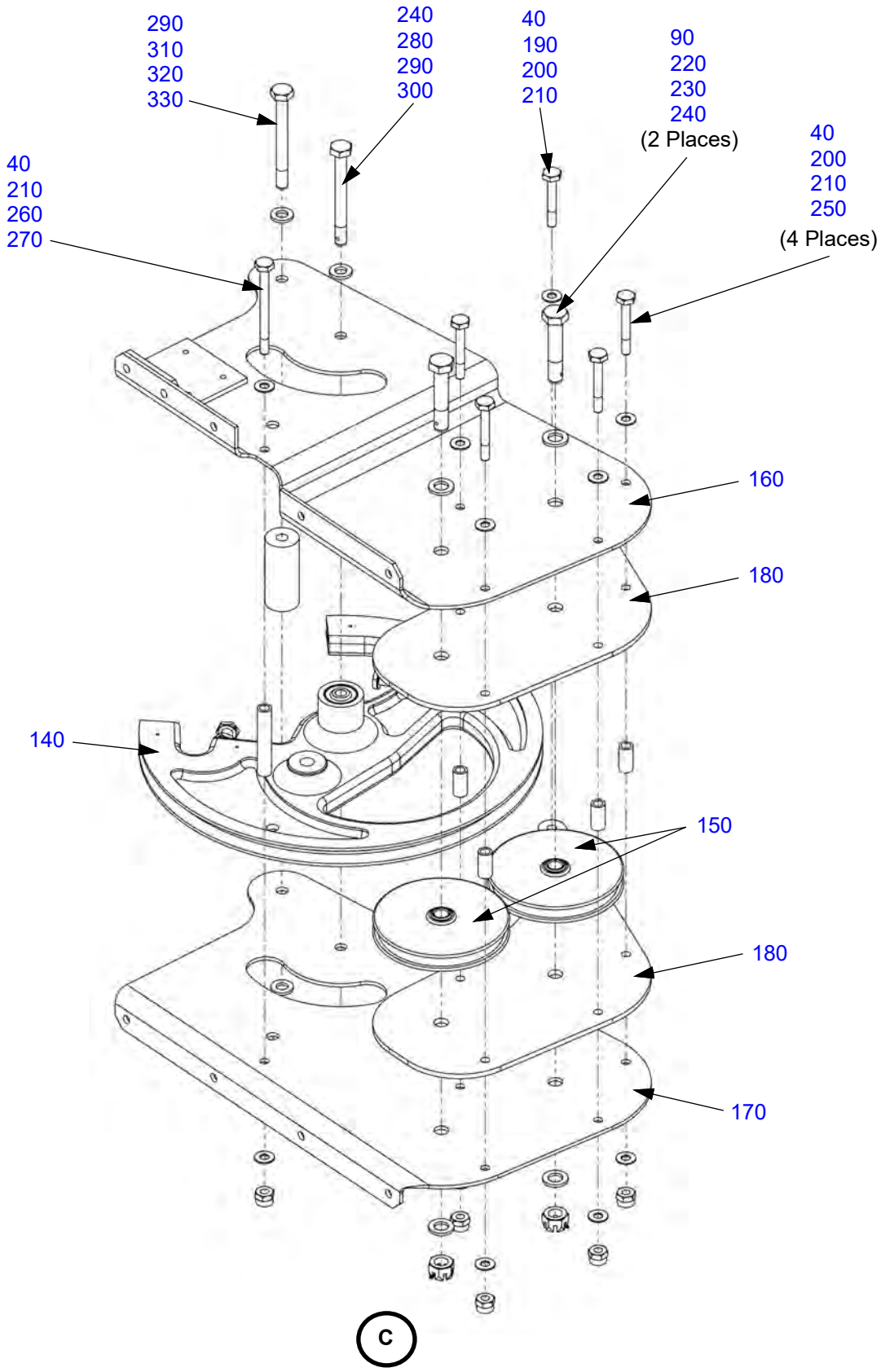

Figure 27-10.3: Aileron Bellcranks (Continued)

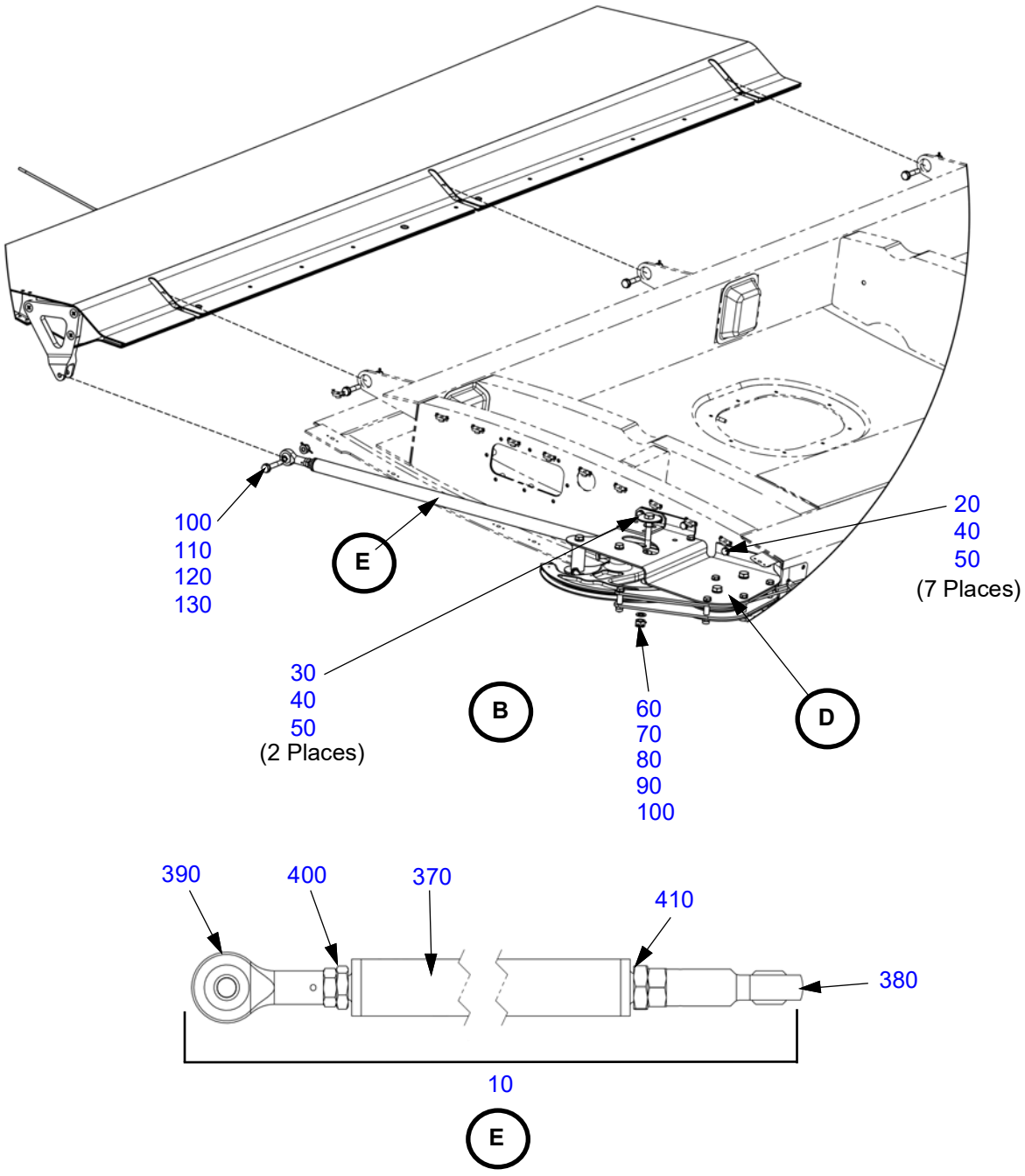

Figure 27-10.3: Aileron Bellcranks (Continued)

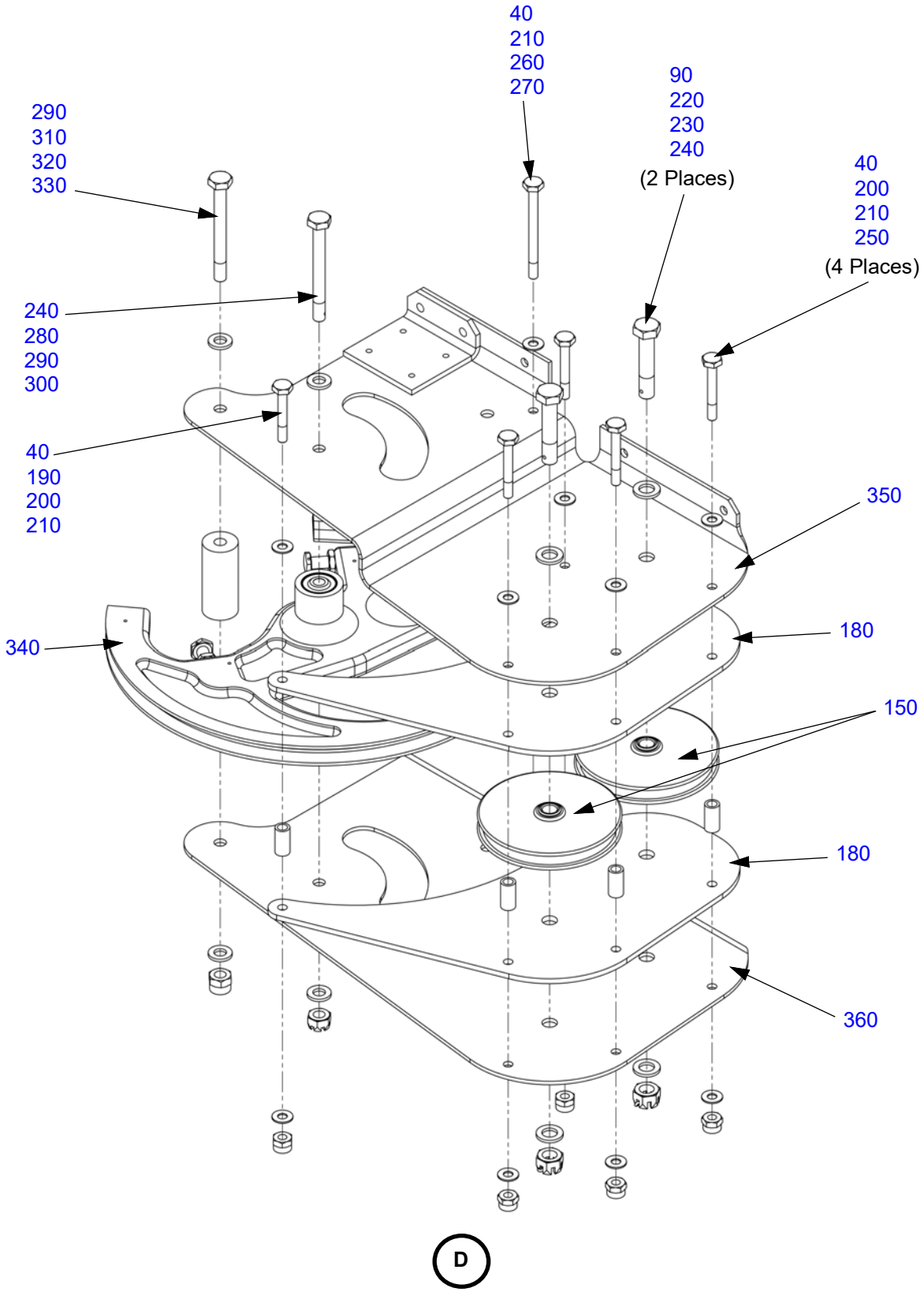

Table 27-10.3: Aileron Bellcranks

Figure Item Number	Part Number	Part Name	Effectivity Code	Amount in Assy.
10	AK27105000	Actuation Pushrod Assy, Aileron	K003 and On	2
20	AN3-6A	Bolt, 10-32 x 25/32" Undrilled	K003 and On	14
30	AN3-7A	Bolt, 10-32 x 29/32" Undrilled	K003 and On	4
40	NAS1149F0332P	Washer, Flat #10 x .032	K003 and On	60
50	MS21042L3	Nut, Self-locking, 450°, Reduced #10-32	K003 and On	18
60	AN5-16	Bolt, 5/16-24 x 1-27/32" Drilled Shank	K003 and On	2
70	NAS1149F0532P	Washer, Flat 5/16 x .032	K003 and On	4
80	AN970-5	Washer, Flat 5/16 x .063	K003 and On	2
90	AN310-5	Nut, Castellated, Steel 5/16-24	K003 and On	6
100	MS24665-134	Pin, Cotter, Cad Steel Ø .062 x .75	K003 and On	4
110	AN4-13	Bolt, 1/4-28 x 1-13/32" Drilled Shank	K003 and On	2
120	NAS1149F0432P	Washer, Flat 1/4 x .032	K003 and On	4
130	AN310-4	Nut, Castellated, Steel 1/4-28	K003 and On	2
140	AK27103100	Sector Assy, Aileron, Outbd, Left	K003 and On	1
150	MS20220-2	Pulley, Groove, Nonmetallic Sheave 3.000 OD	K003 and On	2
160	PK27103001	Bracket, Aileron Bellcrank, Upper, Left	K003 and On	1
170	PK27103002	Bracket, Aileron Bellcrank, Lower, Left	K003 and On	1
180	PK27103004	Spacer Plate, Aileron Bellcrank	K003 and On	4
190	AN3-14A	Bolt, 10-32 x 1-9/32" Undrilled	K003 and On	2
200	NAS43DD3-40N	Spacer, #10-32 x 1.734" Long	K003 and On	10
210	MS21044N3	Nut, Self-locking, Steel 10-32	K003 and On	12
220	AN5-14	Bolt, 5/16-24 x 1-19/32" Drilled Shank	K003 and On	4
230	NAS1149F0563P	Washer, Flat 5/16 x .063	K003 and On	8
240	MS24665-132	Pin, Cotter, Cad Steel Ø .062 x .50	K003 and On	4
250	AN3-13A	Bolt, 10-32 x 1-13/32" Undrilled	K003 and On	8

Figure Item Number	Part Number	Part Name	Effectivity Code	Amount in Assy.
260	AN3-22A	Bolt, 10-32 x 2-9/32" Undrilled	K003 and On	2
270	NAS43DD3-111N	Spacer, #10-32 x .625" Long	K003 and On	2
280	AN4-23	Bolt, 1/4-28 x 2-13/32" Drilled Shank	K003 and On	2
290	NAS1149F0463P	Washer, Flat 1/4 x .063	K003 and On	8
300	AN310-4	Nut, Castellated, Steel 1/4-28	K003 and On	2
310	AN4-23A	Bolt, 1/4-28 x 2-13/32" Undrilled	K003 and On	2
320	MS21044N4	Nut, Self-locking, Steel 1/4-28	K003 and On	2
330	PK27103005	Spacer, Travel Stop, Aileron Bellcrank	K003 and On	2
340	AK27104100	Sector Assy, Aileron, Outbd, Right	K003 and On	1
350	PK27104001	Bracket, Aileron Bellcrank, Upper, Right	K003 and On	1
360	PK27104002	Bracket, Aileron Bellcrank, Lower, Right	K003 and On	1
370	AK2710510	Weldment, Actuation Pushrod, Aileron	K003 and On	2
380	M81935/2-5	Rod-end, Female, No Keyway Ø .313 Bearing Bore	K003 and On	2
390	MS21153-6	Bearing, Rod End, .2500 Bore x .3125-24 UNIF-3B	K003 and On	2
400	AN316-5R	Nut, Jam, Hexagon, Cad Steel 5/16-24	K003 and On	2
410	AN316-6R	Nut, Jam, Hexagon, Cad Steel 3/8-2	K003 and On	2

Figure 27-10.4: Aileron Trim Tab Servo

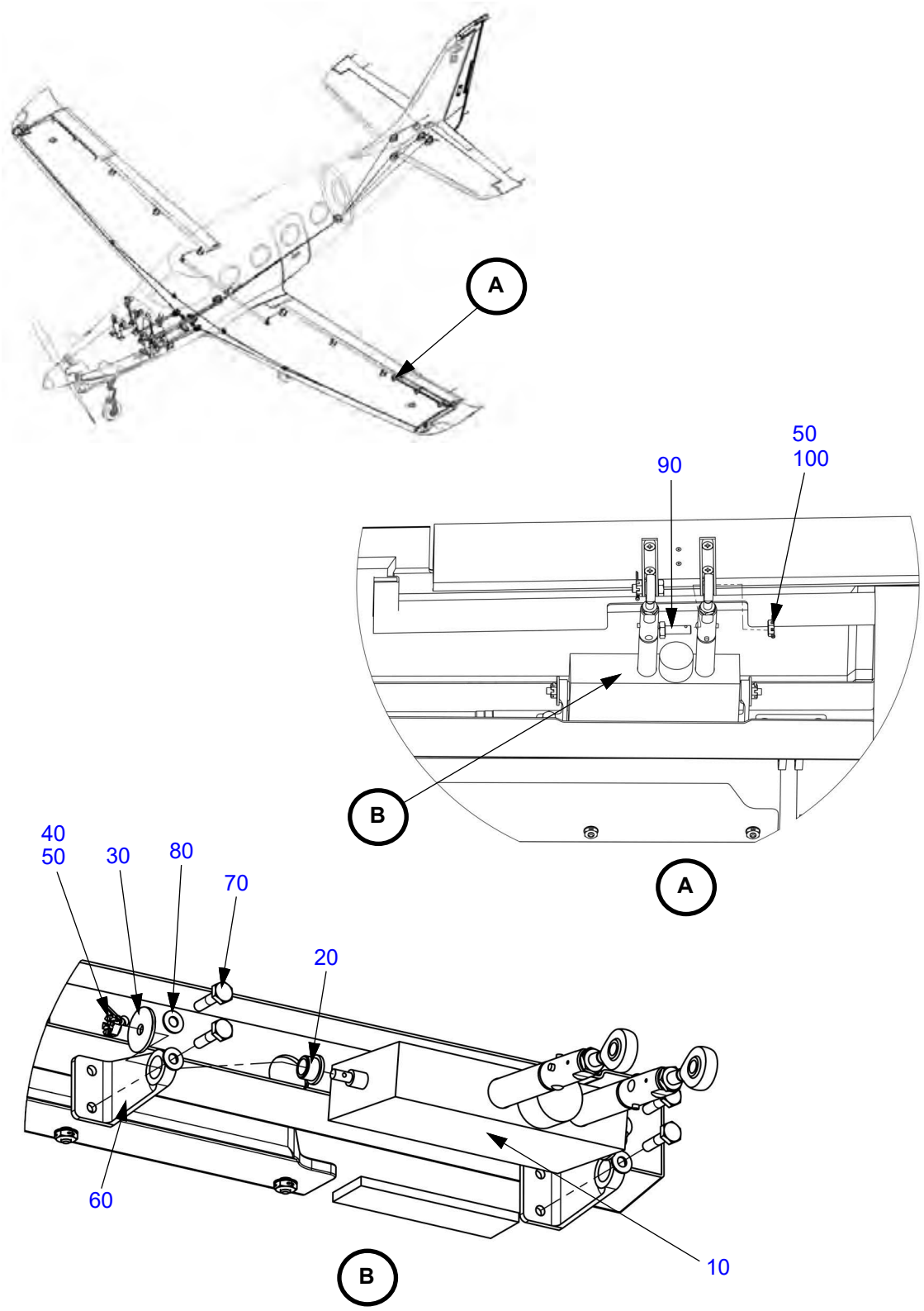

Table 27-10.4: Aileron Trim Tab Servo

Figure Item Number	Part Number	Part Name	Effectivity Code	Amount in Assy.
10	AK99003001	Trim Tab Actuator	K003 and On	1
20	M81934/2-05A008	Bushing, Sleeve, Flanged	K003 and On	2
30	AN970-3	Washer, Flat #10 x .063	K003 and On	2
40	AN320-3	Nut, Castellated, Shear, Steel 10-32	K003 and On	2
50	MS24665-134	Pin, Cotter, Cad Steel Ø .062 x .75	K003 and On	4
60	PK27101001	Mount, Aileron Servo	K003 and On	2
70	AN3-6A	Bolt, 10-32 x 25/32" Undrilled	K003 and On	4
80	NAS1149F0332P	Washer, Flat #10 x .032	K003 and On	4
90	AN4-6	Bolt, 1/4-28 x 25/32" Drilled Shank	K003 and On	2
100	AN320-4	Nut, Castellated, Shear, Steel 1/4-28	K003 and On	2

Figure 27-10.5: Aileron Fairleads

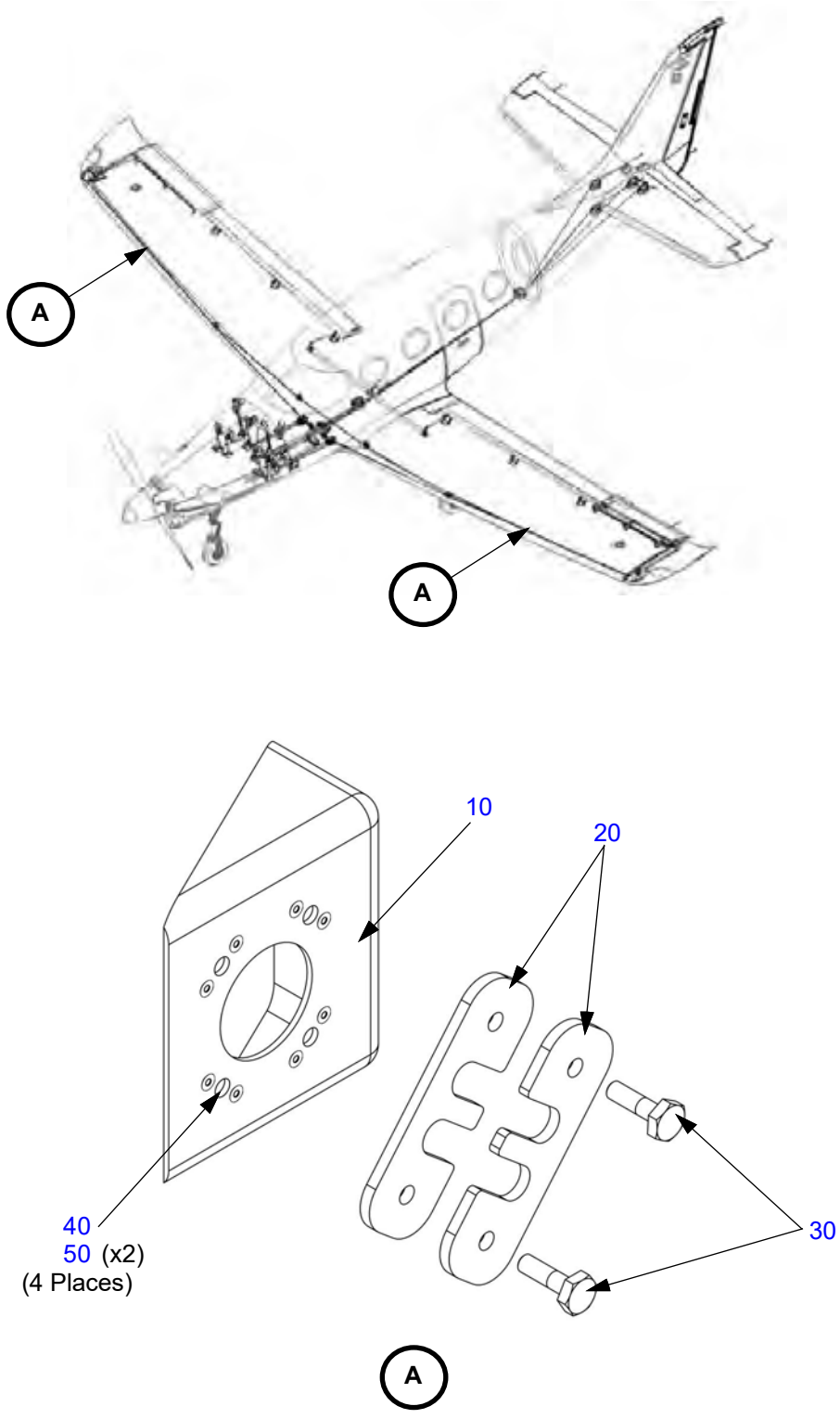

Left side shown, right side opposite.

Table 27-10.5: Aileron Fairleads

Figure Item Number	Part Number	Part Name	Effectivity Code	Amount in Assy.
10	PK27106001	Fairlead Mount Bracket, Aileron	K003 and On	2
20	PK27106002	Fairlead, Aileron, Wing	K003 and On	4
30	AN3-5A	Bolt, 10-32 x 21/32" Undrilled	K003 and On	4
40	MS21069L3	Nutplate, Self-locking, Reduced Spacing Ø .190-32	K003 and On	8
50	CCR264CS-3-02	Cherry Pull-Thru Rivet, C'sunk, CRES Ø 3/32 x .193	K003 and On	16

This Page Intentionally Left Blank

RUDDER AND TAB

Figure 27-20.1: Rudder Cables

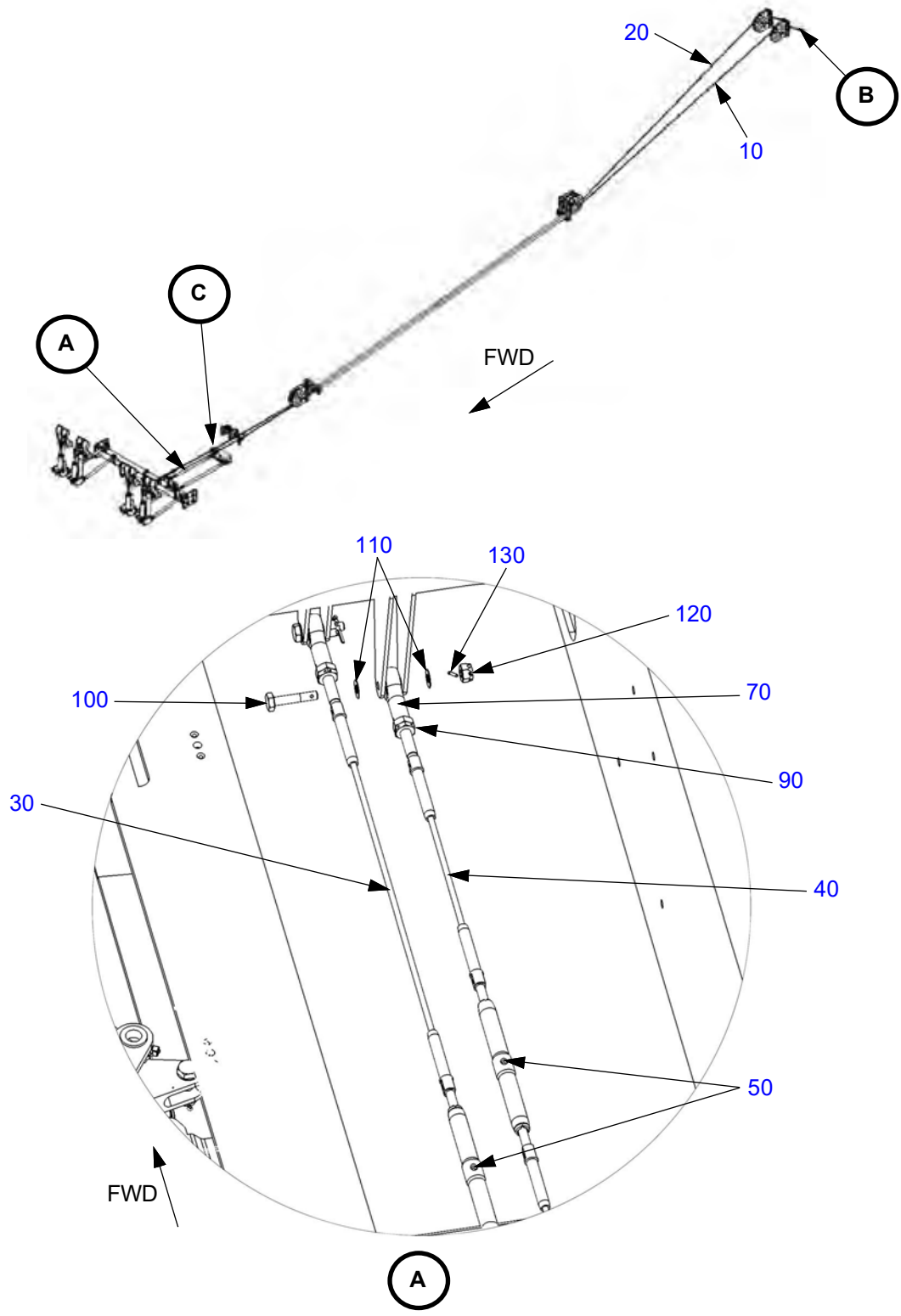

Figure 27-20.1: Rudder Cables (Continued)

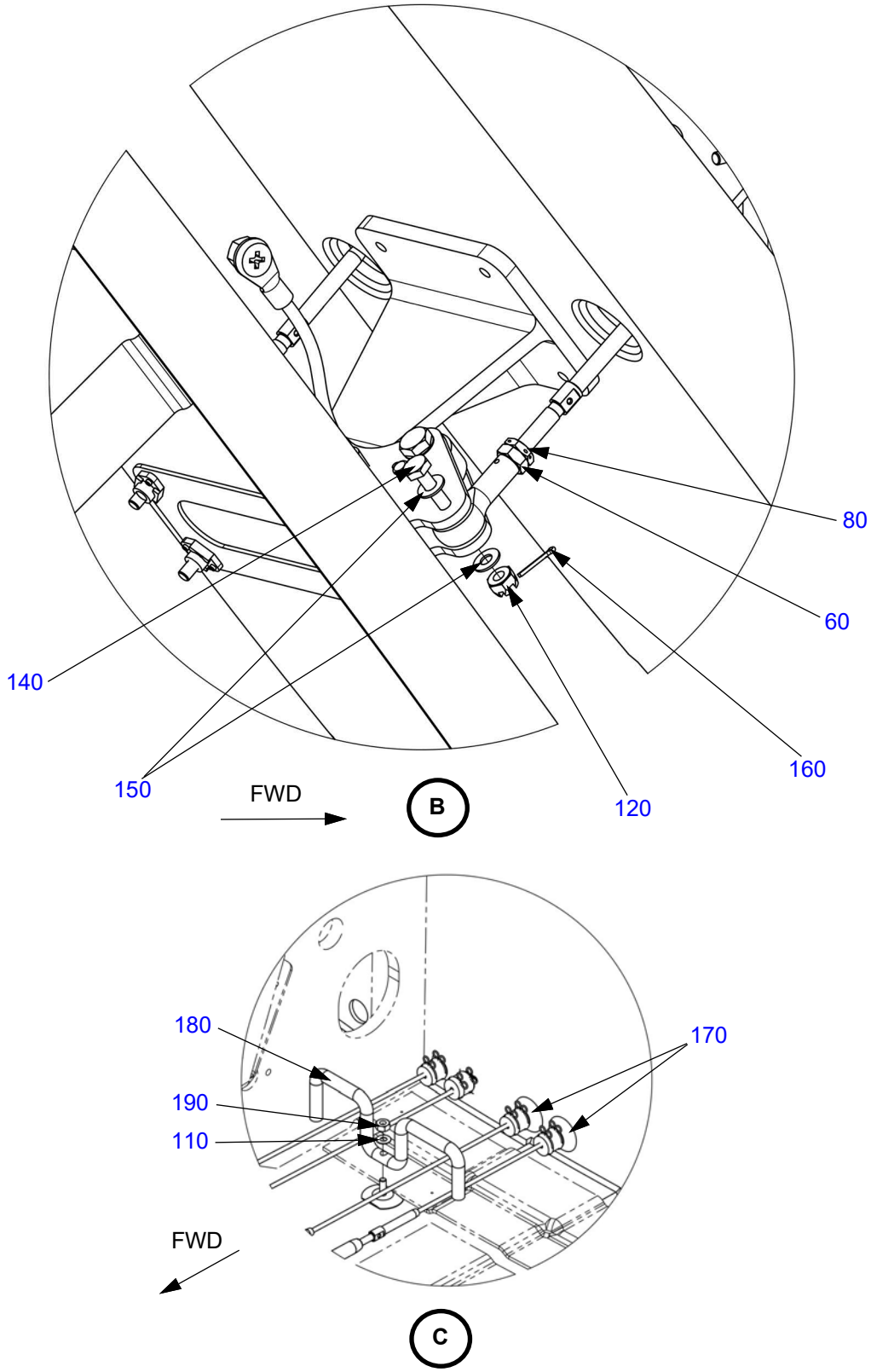

Table 27-20.1: Rudder Cables

Figure Item Number	Part Number	Part Name	Effectivity Code	Amount in Assy.
10	AK27203200	Cable Assy, Rudder, Left, Aft	K003 and On	1
20	AK27204200	Cable Assy, Rudder, Right, Aft	K003 and On	1
30	AK27203100	Cable Assy, Rudder, Left, FWD	K003 and On	1
40	AK27204100	Cable Assy, Rudder, Right, FWD	K003 and On	1
50	MS21251-B5L	Turnbuckle, Brass, Long 1/4-28 Thread	K003 and On	2
60	MS21153-1	Bearing, Rod End, .1900 Bore x .2500-28 UNJF-3B	K003 and On	2
70	MS21153-5	Bearing, Rod End, LH, .1900 Bore x .2500-28 UNJF-3B	K003 and On	2
80	NAS1423C4	Nut, Jam, Drilled, CRES 1/4-28	K003 and On	2
90	NAS1423C4L	Nut, Jam, Drilled, CRES 1/4-28 LH	K003 and On	2
100	AN3-10	Bolt, 10-32 x 1-1/32" Drilled Shank	K003 and On	2
110	NAS1149F0316P	Washer, Flat #10 x .016	K003 and On	5
120	AN310-3	Nut, Castellated, Steel 10-32	K003 and On	4
130	MS24665-134	Pin, Cotter, Cad Steel Ø .062 x .75	K003 and On	2
140	AN3-11	Bolt, 10-32 x 1-5/32" Drilled Shank	K003 and On	2
150	NAS1149F0332P	Washer, Flat #10 x .032	K003 and On	4
160	MS24665-132	Pin, Cotter, Cad Steel Ø .062 x .50	K003 and On	2
170	AK99005001	Control Cable Seal	K003 and On	2
180	PK27304007	Cable Fairlead, Rudder And Elevator Cables	K003 and On	1
190	MS21083N3	Nut, Self-locking, Non-metalic Insert 10-32	K003 and On	1

Figure 27-20.2: Rudder Cable Seals

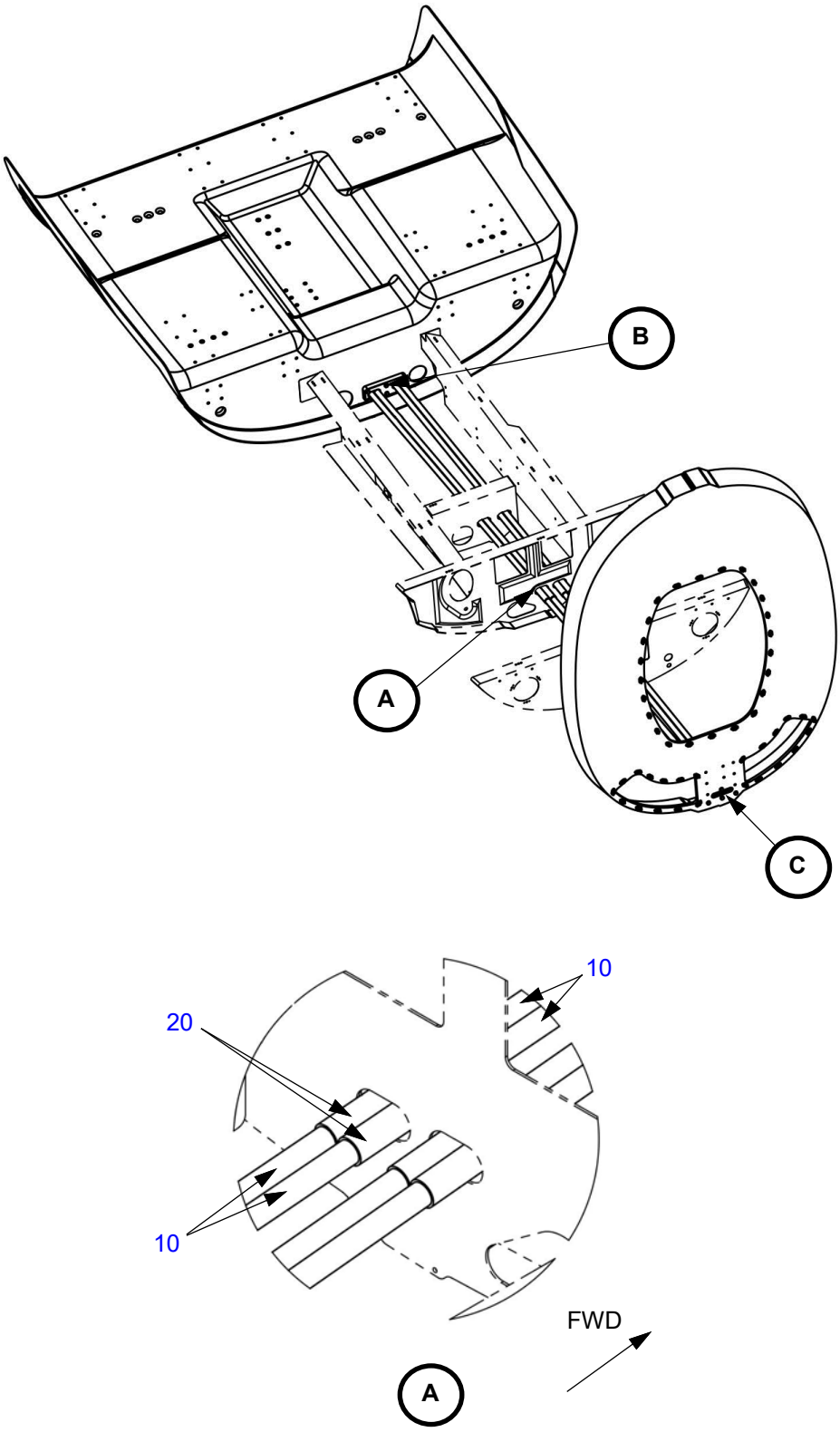

Figure 27-20.2: Rudder Cable Seals (Continued)

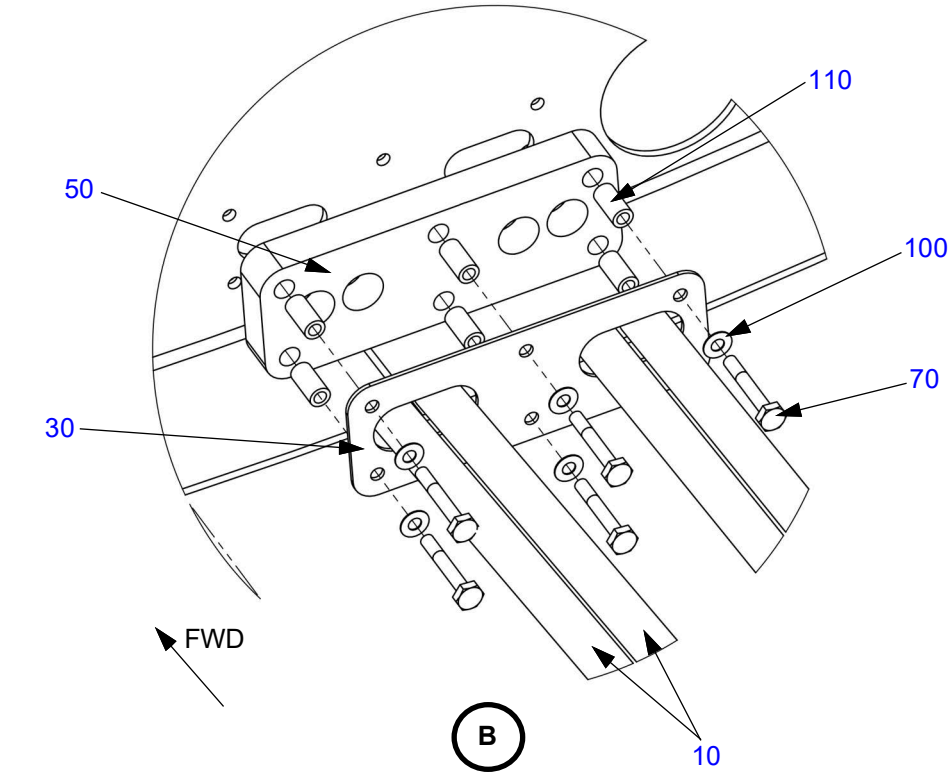

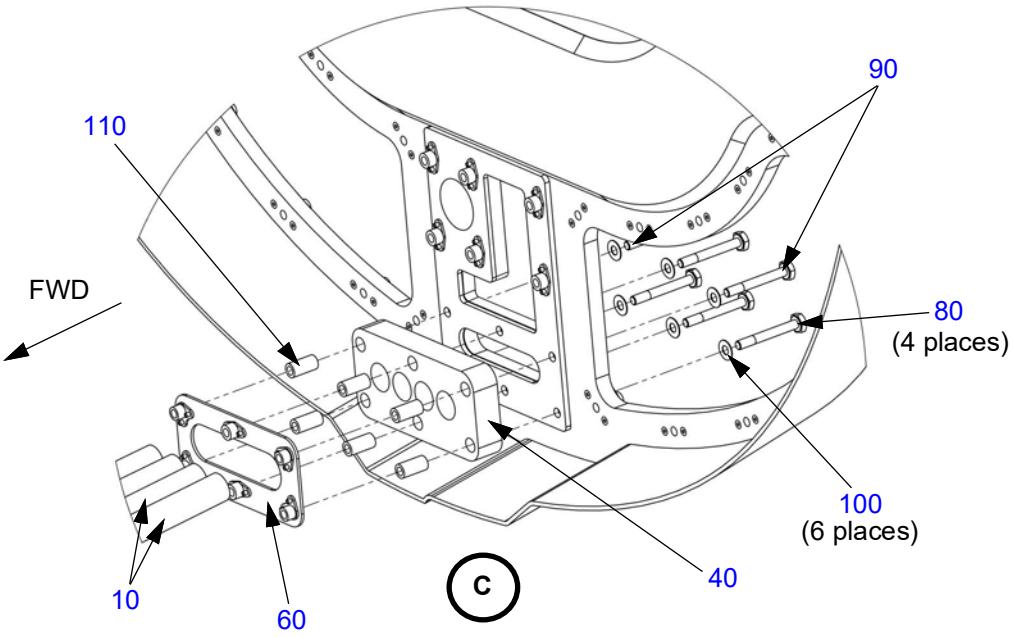

Table 27-20.2: Rudder Cable Seals

Figure Item Number	Part Number	Part Name	Effectivity Code	Amount in Assy.
10	PK27004005	Cable Tube, Elev And Rdr	K003 and On	4
20	PK27004006	Cable Tube Coupler, Elev And Rdr	K003 and On	2
30	PK27004002	Seal Block Backing Plate, Elev And Rdr, Fwd	K003 and On	1
40	PK27004003	Seal Block, Elev And Rdr, Aft	K003 and On	1
50	PK27004004	Seal Block, Elev And Rdr, Fwd	K003 and On	1
60	AK27004001	Assembly, Backing Plate, Aft Pressure Bulkhead	K003 and On	1
70	AN3-12A	Bolt, 10-32 x 1-9/32" Undrilled	K003 and On	6
80	AN3-14A	Bolt, 10-32 x 1-17/32" Undrilled	K003 and On	4
90	AN3-15A	Bolt, 10-32 x 1-21/32" Undrilled	K003 and On	2
100	NAS1149F0316P	Washer, Flat #10 x .016	K003 and On	12
110	NAS42HT6B-40	Spacer, Steel .193 ID x .312 OD x .625	K003 and On	12

Figure 27-20.3: Rudder Pulleys

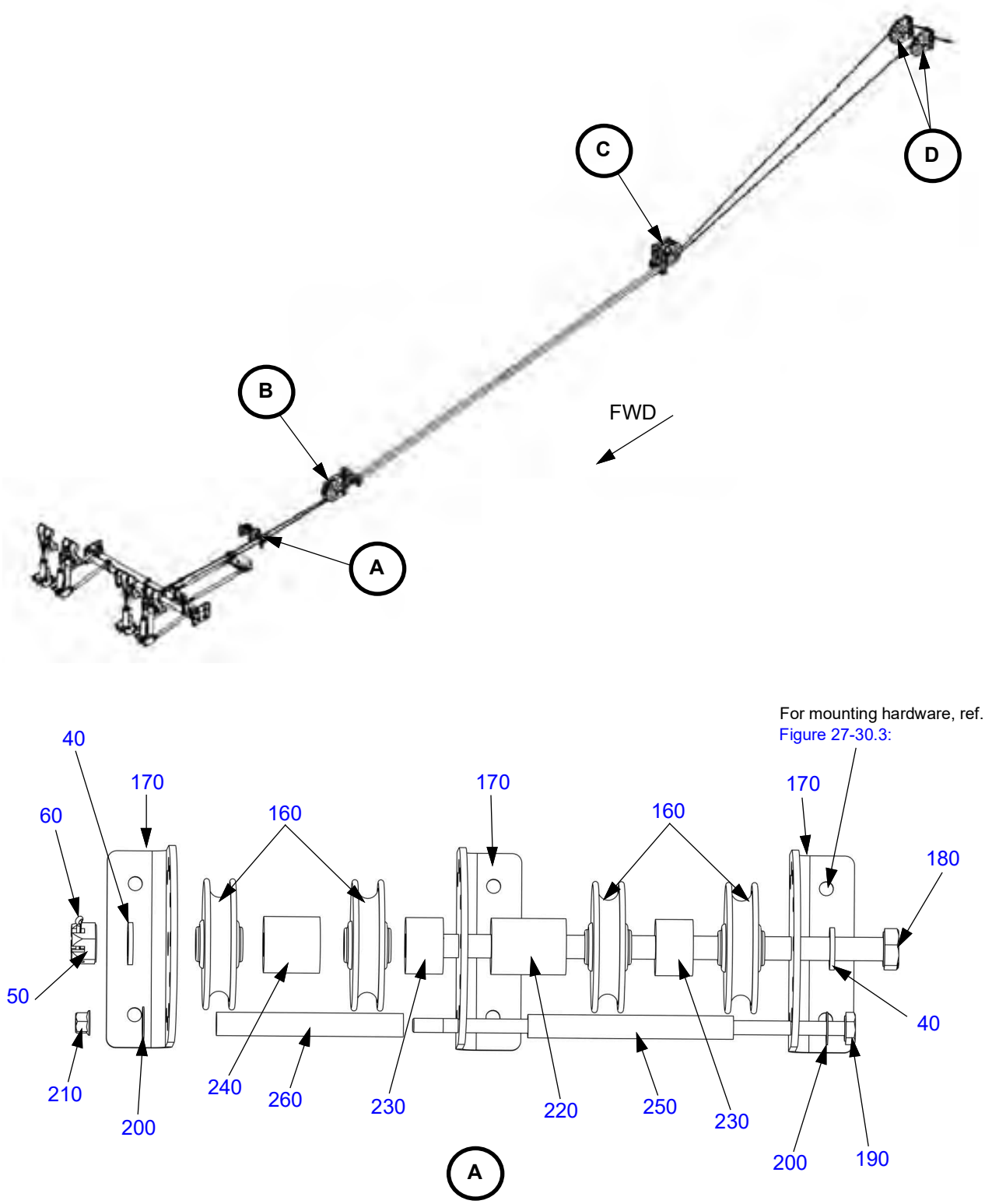

Figure 27-20.3: Rudder Pulleys (Continued)

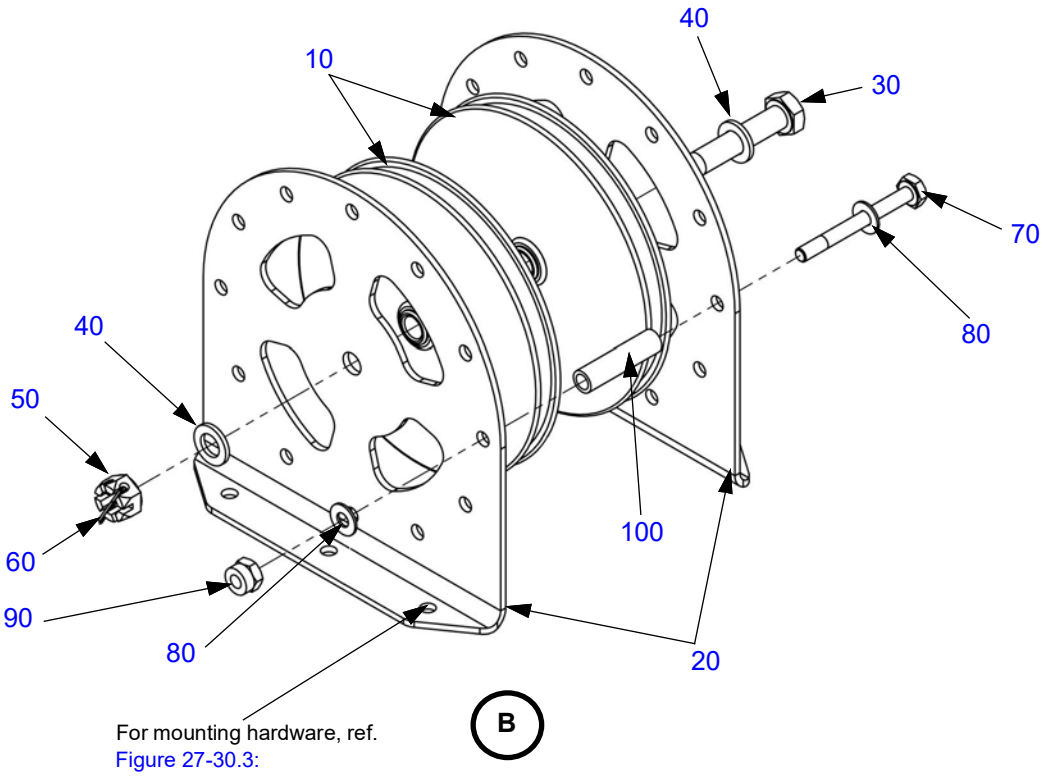

For mounting hardware, ref. Figure 27-30.3:

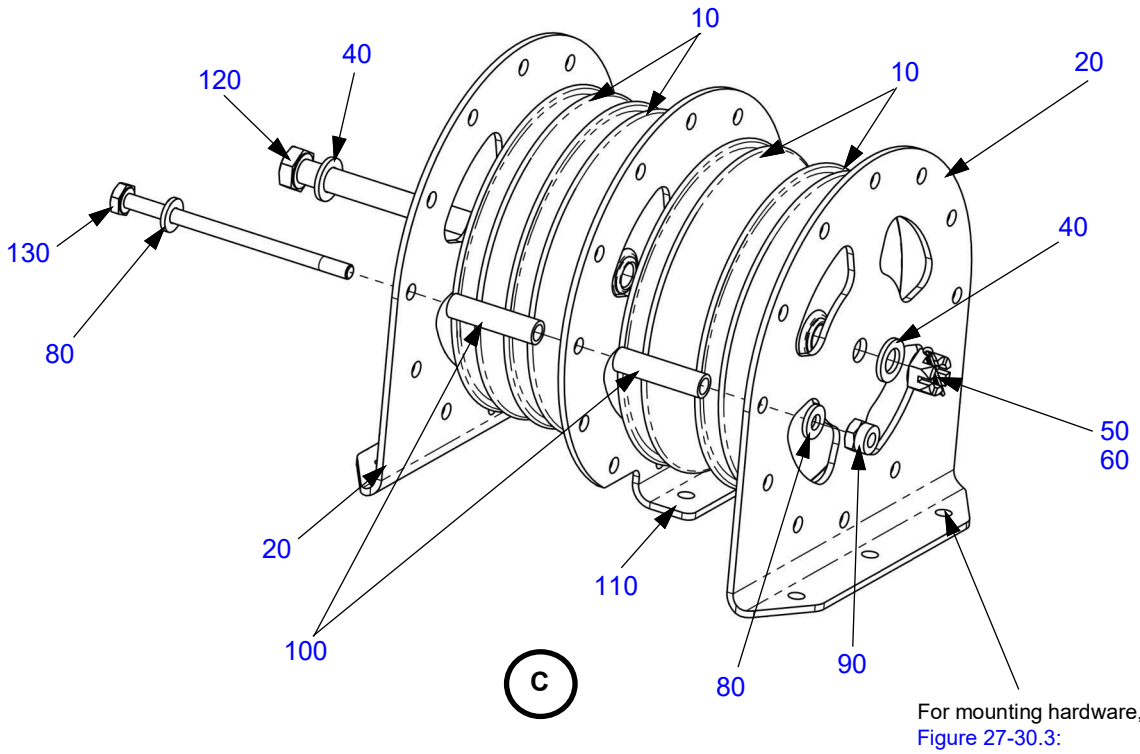

For mounting hardware, ref. Figure 27-30.3:

Figure 27-20.3: Rudder Pulleys (Continued)

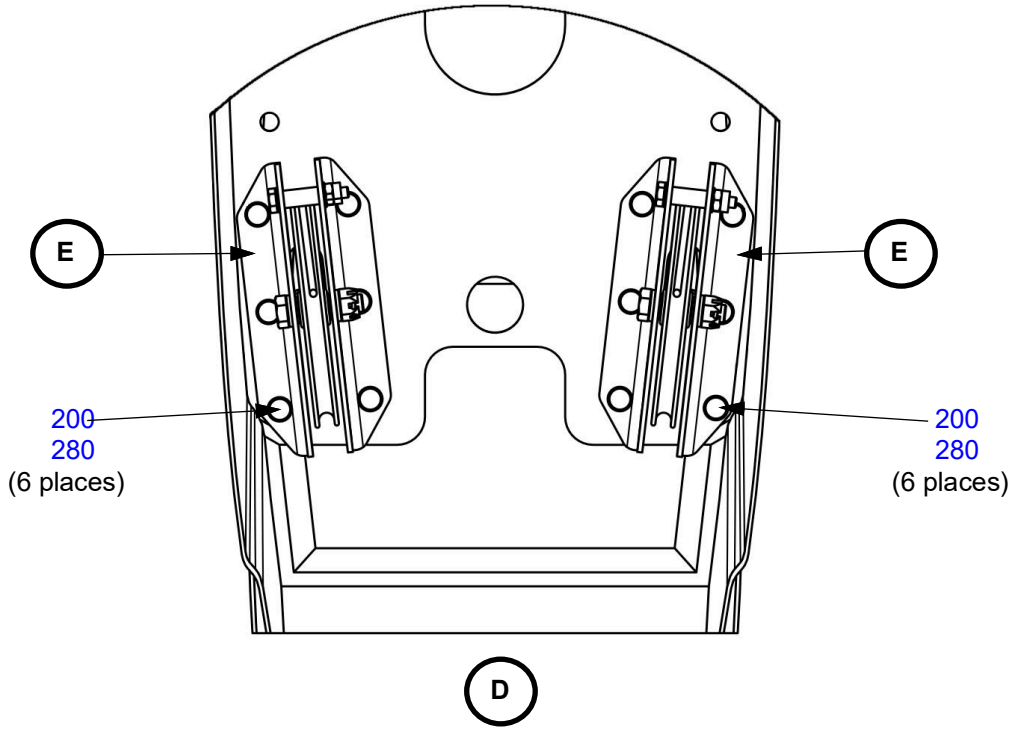

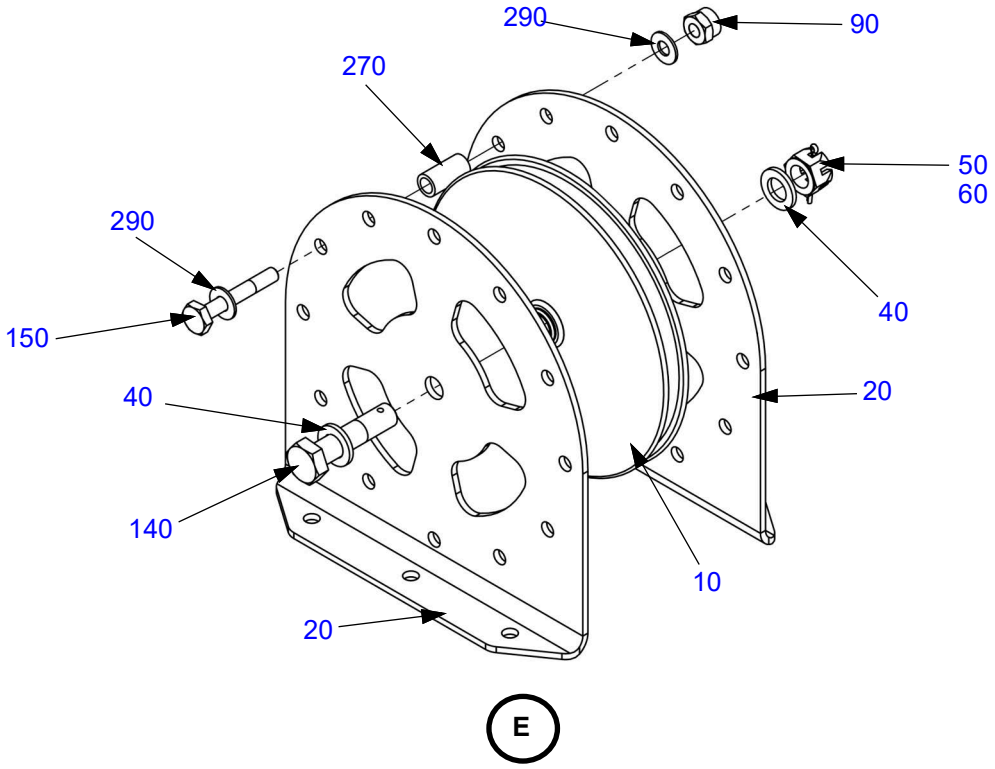

Table 27-20.3: Rudder Pulleys

Figure Item Number	Part Number	Part Name	Effectivity Code	Amount in Assy.
10	MS20220-3	Pulley, Groove, Nonmetallic Sheave 4.250 OD	K003 and On	8
20	PK27002000	Pulley Bracket, Universal, Large	K003 and On	8
30	AN5-17	Bolt, 5/16-24 x 1-31/32" Drilled Shank	K003 and On	1
40	NAS1149F0563P	Washer, Flat 5/16 x .063	K003 and On	10
50	AN310-5	Nut, Castellated, Steel 5/16-24	K003 and On	5
60	MS24665-134	Pin, Cotter, Cad Steel Ø .062 x .75	K003 and On	5
70	AN3-16A	Bolt, 10-32 x 1-29/32" Undrilled	K003 and On	1
80	NAS1149F0332P	Washer, Flat #10 x .032	K003 and On	6
90	MS21044N3	Nut, Self-locking, Steel 10-32	K003 and On	4
100	NAS43DD3-80N	Spacer, Aluminum .214 ID x .312 OD x 1.250	K003 and On	3
110	PK27002200	Pulley Bracket, Universal, Clearance	K003 and On	1
120	AN5-32	Bolt, 5/16-24 x 3-11/32" Drilled Shank	K003 and On	1
130	AN3-32A	Bolt, 10-32 x 1-29/32" Undrilled	K003 and On	1
140	AN5-12	Bolt, 5/16-24 x 1-11/32" Drilled Shank	K003 and On	2
150	AN3-12A	Bolt, 10-32 x 1-9/32" Undrilled	K003 and On	2
160	MS20220-1	Pulley, Groove, Nonmetallic Sheave 1.750 OD	K003 and On	4
170	PK27002300	Pulley Bracket, Universal, Small	K003 and On	3
180	AN5-60	Bolt, 5/16-24 x 6-3/32" Drilled Shank	K003 and On	1
190	AN3-56A	Bolt, 10-32 x 5-25/32" Undrilled	K003 and On	1
200	NAS1149F0316P	Washer, Flat #10 x .016	K003 and On	14
210	MS21042L3	Nut, Self-locking, 450°, Reduced #10-32	K003 and On	1
220	PK27002301	Pulley Spacer, 5/16" ID x 3/4" OD x 1" Lg	K003 and On	1

Figure Item Number	Part Number	Part Name	Effectivity Code	Amount in Assy.
230	PK27002302	Pulley Spacer, 5/16" ID x 3/4" OD x 1/2" Lg	K003 and On	2
240	PK27002303	Pulley Spacer, 5/16" ID x 3/4" OD x 3/4" Lg	K003 and On	1
250	NAS43DD3-176N	Spacer, Aluminum .214 ID x .312 OD x 2.750	K003 and On	1
260	NAS43DD3-160N	Spacer, Aluminum .214 ID x .312 OD x 2.500	K003 and On	1
270	NAS43DD3-40N	Spacer, Aluminum .214 ID x .312 OD x .625	K003 and On	1
280	AN3-7A	Bolt, 10-32 x 29/32" Undrilled	K003 and On	12
290	NAS1149F0363P	Washer, Flat #10 x .063	K003 and On	2

Figure 27-20.4: Rudder Linkage and Bellcrank

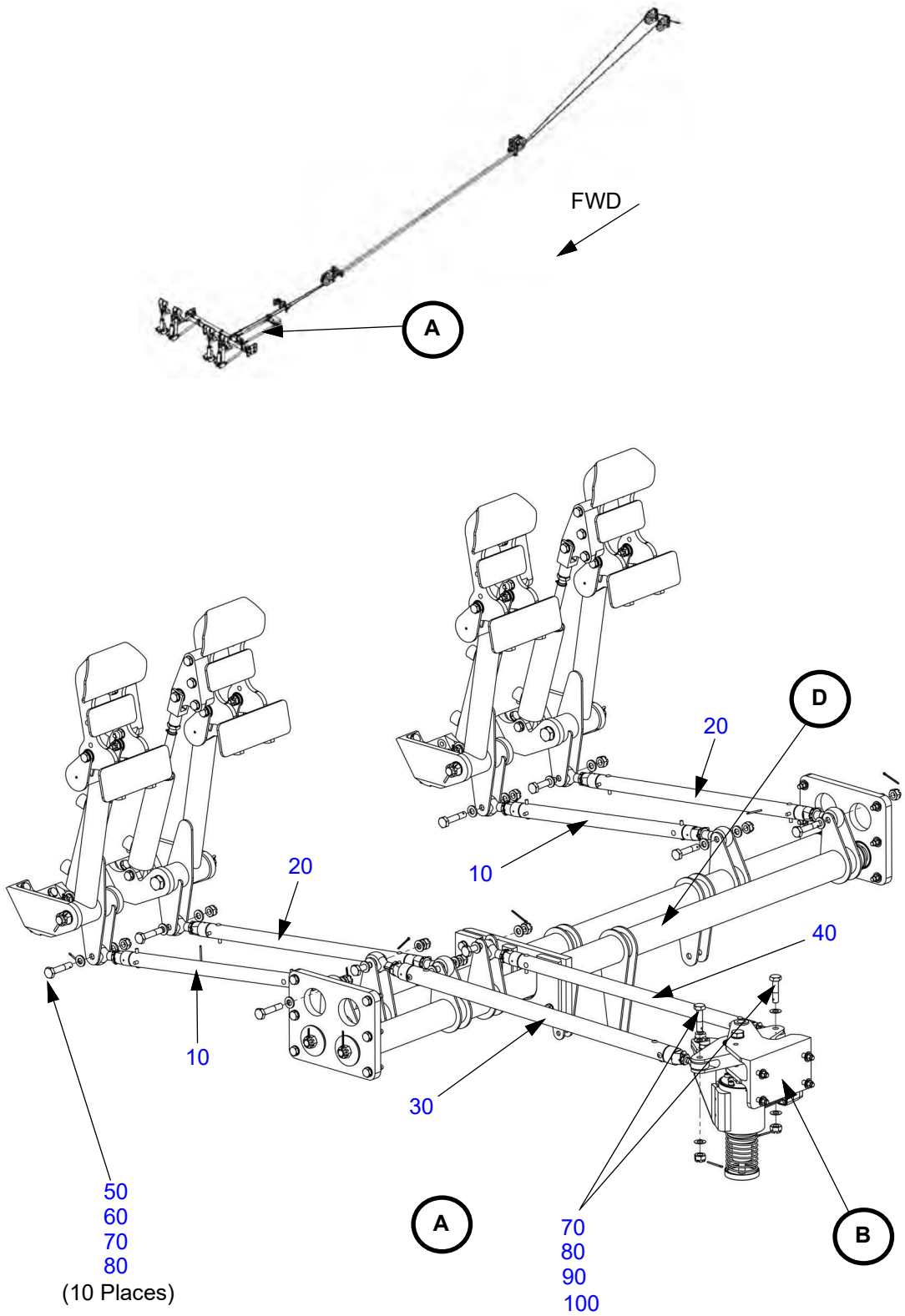

Figure 27-20.4: Rudder Linkage and Bellcrank (Continued)

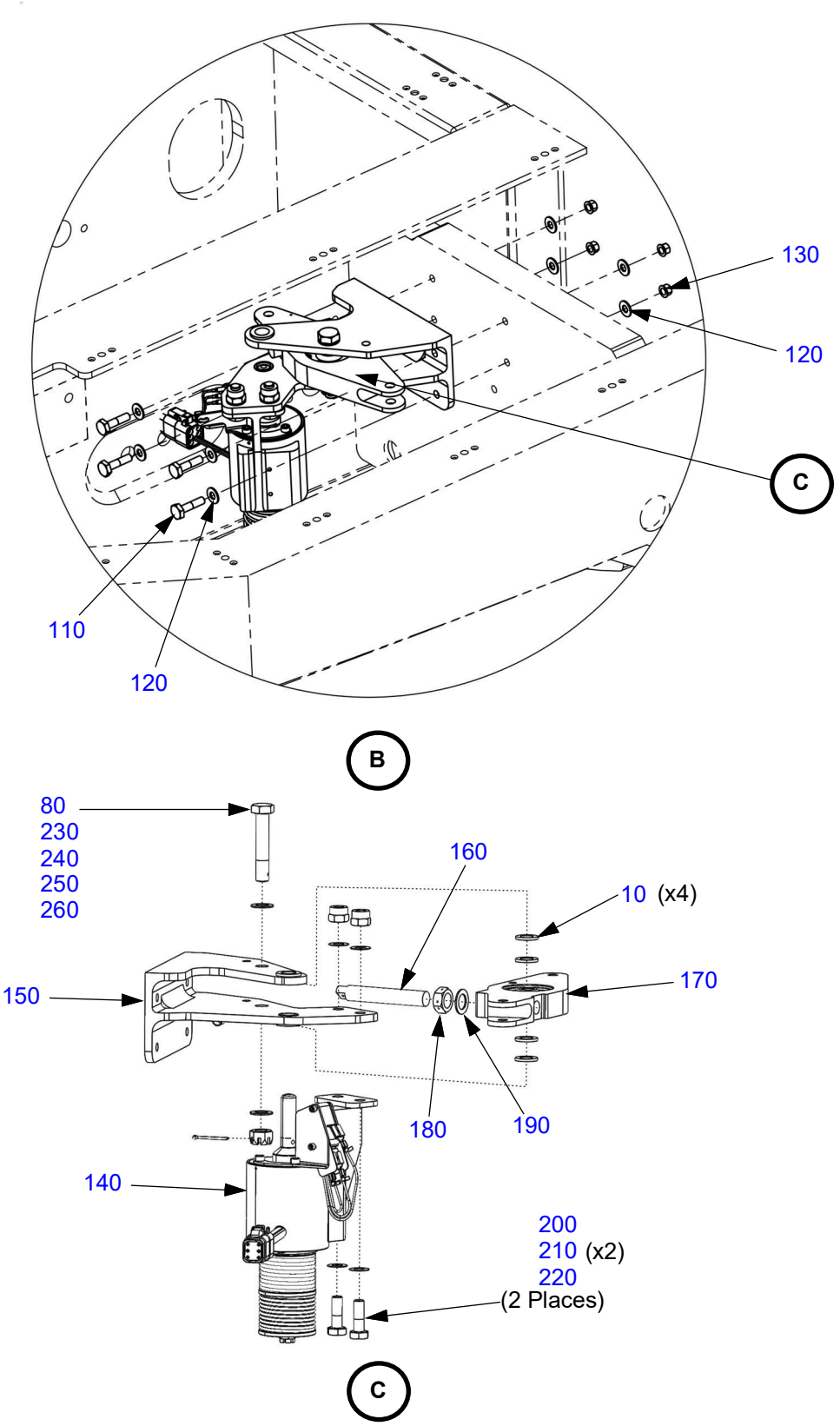

Figure 27-20.4: Rudder Linkage and Bellcrank (Continued)

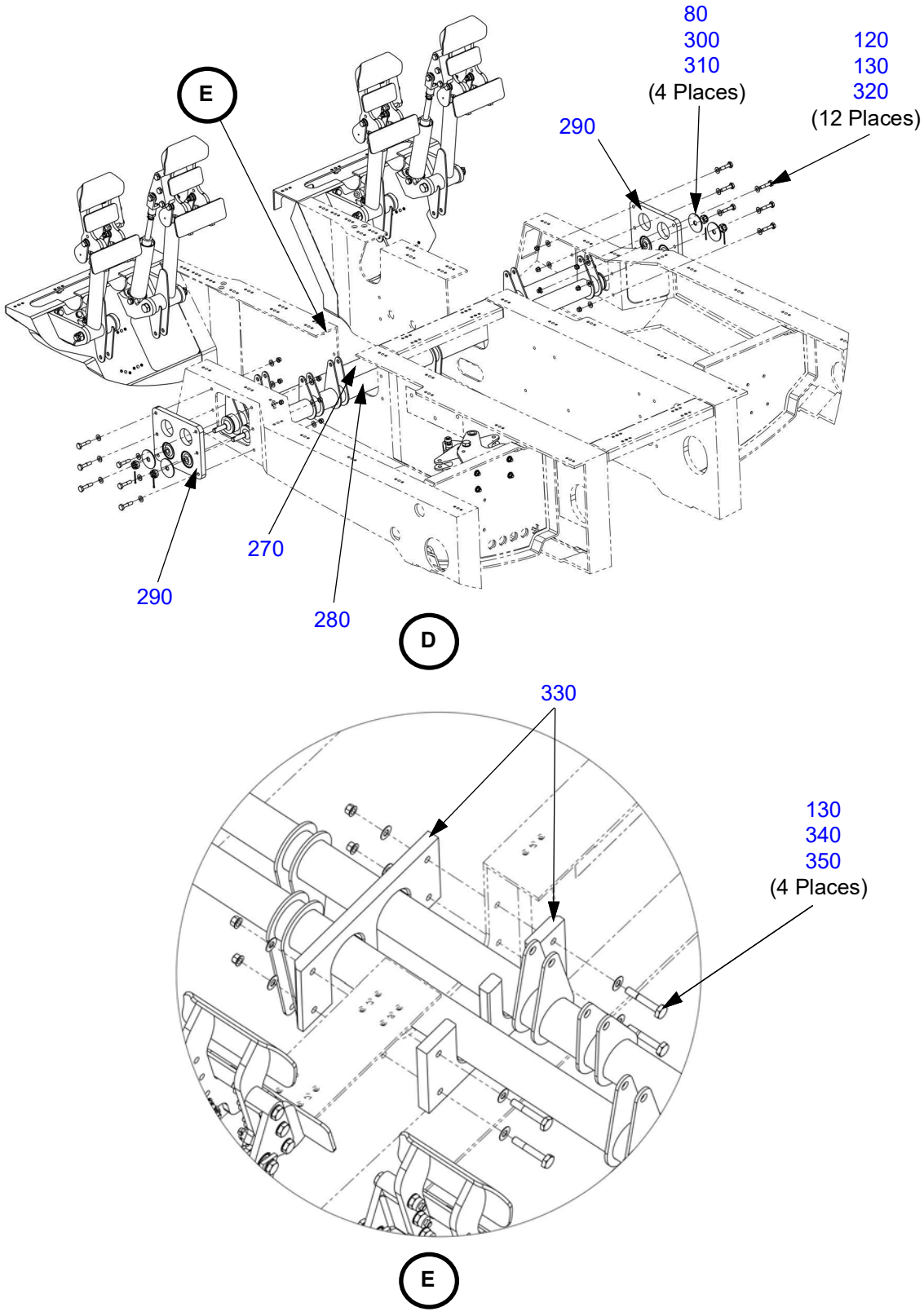

Table 27-20.4: Rudder Linkage and Bellcrank

Figure Item Number	Part Number	Part Name	Effectivity Code	Amount in Assy.
10	AK27201100	Control Rod Assy, Left Pedal, Rudder	K003 and On	2
20	AK27201200	Control Rod Assy, Right Pedal, Rudder	K003 and On	2
30	AK27201300	Control Rod Assy, Outboard, Rudder Bell-crank	K003 and On	1
40	AK27201400	Control Rod Assy, Inboard, Rudder Bell-crank	K003 and On	1
50	AN4-12	Bolt, 1/4-28 x 1-9/32" Drilled Shank	K003 and On	10
60	NAS1149F0463P	Washer, Flat 1/4 x .063	K003 and On	20
70	AN310-4	Nut, Castellated, Steel 1/4-28	K003 and On	12
80	MS24665-134	Pin, Cotter, Cad Steel Ø .062 x .75	K003 and On	17
90	AN4-10	Bolt, 1/4-28 x 1-1/32" Drilled Shank	K003 and On	2
100	NAS1149F0416P	Washer, Flat 1/4 x .016	K003 and On	2
110	AN3-6A	Bolt, 10-32 x 25/32" Undrilled	K003 and On	4
120	NAS1149F0332P	Washer, Flat #10 x .032	K003 and On	32
130	MS21042L3	Nut, Self-locking, 450°, Reduced #10-32	K003 and On	20
140	PK99003014-B	Push Type Solenoid	K003 and On	1
150	PK27205001	Bracket, Bellcrank Outer, Rdr	K003 and On	1
160	PK27205009	Adjustable Stop, Bellcrank Pivot	K003 and On	1
170	AK27205007	Assembly, Pivot, Bellcrank, Rudder	K003 and On	1
180	NAS509-6	Nut, Jam, Drilled, Cad Steel 3/8-24	K003 and On	1
190	NAS1149F0632P	Washer, Flat 3/8 x .032	K003 and On	1
200	AN4-6A	Bolt, 1/4-28 x 25/32" Undrilled	K003 and On	2
210	NAS1149F0416P	Washer, Flat 1/4 x .016	K003 and On	4
220	MS21044N4	Nut, Self-locking, Steel 1/4-28	K003 and On	2
230	AN5-15	Bolt, 5/16-24 x 1-23/32" Drilled Shank	K003 and On	1
240	NAS1149F0532P	Washer, Flat 5/16 x .032	K003 and On	2

Figure Item Number	Part Number	Part Name	Effectivity Code	Amount in Assy.
250	NAS1149F0563P	Washer, Flat 5/16 x .063	K003 and On	4
260	AN310-5	Nut, Castellated, Steel 5/16-24	K003 and On	1
270	AK27206100	Torque Tube Weldment, Rudder Crossover, Fwd	K003 and On	1
280	AK27206200	Torque Tube Weldment, Rudder Crossover, Aft	K003 and On	1
290	AK27206001	Assembly, Bracket, Rudder Torque Tubes	K003 and On	2
300	AN310-5	Nut, Castellated, Steel 5/16-24	K003 and On	4
310	AN970-5	Washer, Flat 5/16 x .063	K003 and On	4
320	AN3-7A	Bolt, 1/4-28 x 25/32" Undrilled	K003 and On	12
330	PK27206002	Bearing Block, Rudder Torque Tube	K003 and On	2
340	AN3-11A	Bolt, 10-32 x 1-5/32" Undrilled	K003 and On	4
350	NAS1149F0316P	Washer, Flat #10 x .016	K003 and On	8

Figure 27-20.5: Rudder Pedals

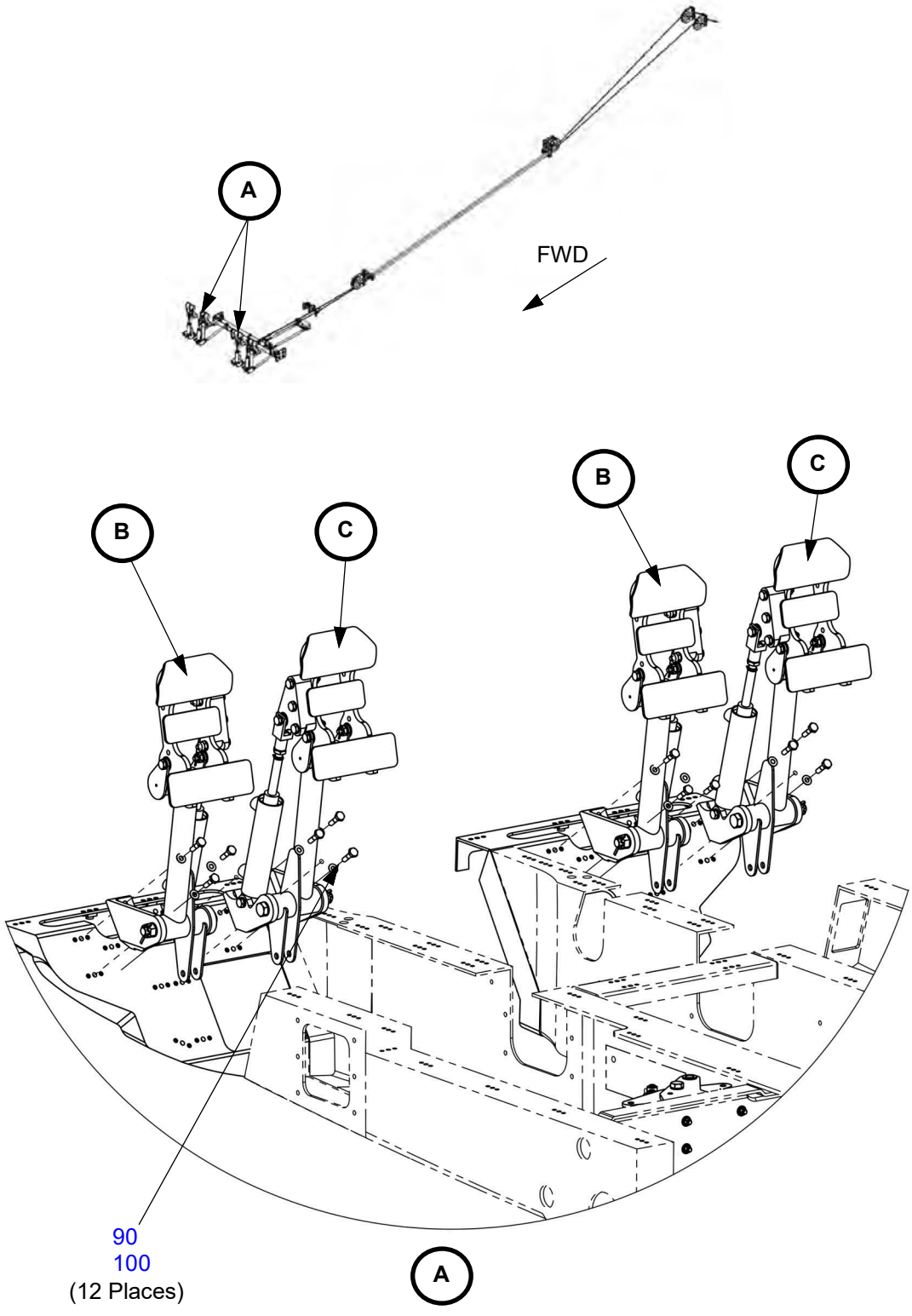

Figure 27-20.5: Rudder Pedals (Continued)

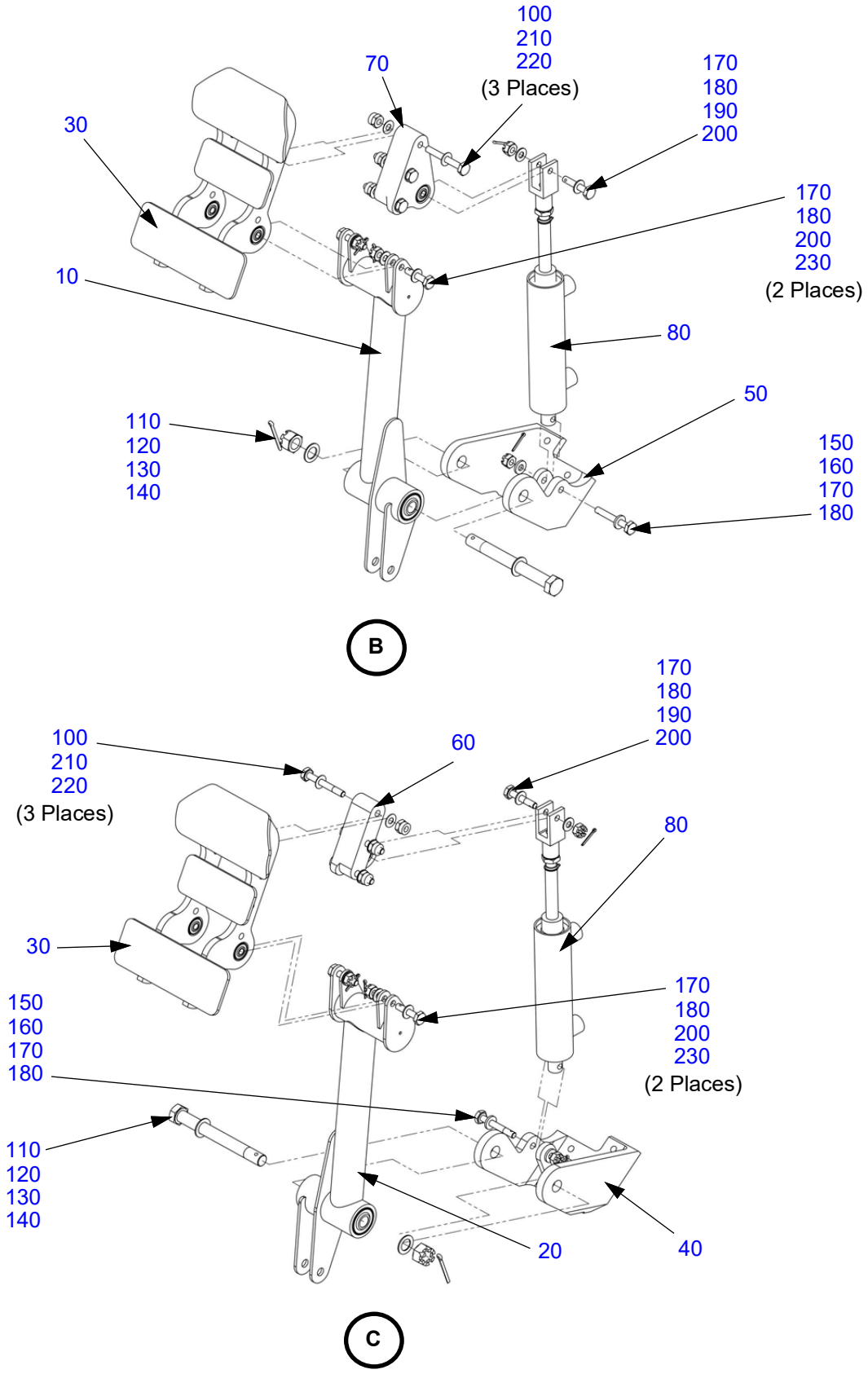

Table 27-20.5: Rudder Pedals

Figure Item Number	Part Number	Part Name	Effectivity Code	Amount in Assy.
10	AK27202100	Weldment, Rudder Pedal Arm, Left	K003 and On	2
20	AK27202200	Weldment, Rudder Pedal Arm, Right	K003 and On	2
30	AK27202300	Rudder Pedal Weldment	K003 and On	4
40	PK27202001	Bearing Block, Right, Pedal Arm W/brake	K003 and On	2
50	PK27202003	Bearing Block, Left, Pedal Arm W/brake	K003 and On	2
60	PK27202004	Bracket, RH, Brake Actuator	K003 and On	2
70	PK27202005	Bracket, LH, Brake Actuator	K003 and On	2
80	PK99003003	C100080 Series Master Cylinder	K003 and On	4
80*	AK32405000	Brake Master Cylinder Assembly	K003 and On	4
90	AN3-6A	Bolt, 10-32 x 25/32" Undrilled	K003 and On	12
100	NAS1149F0316P	Washer, Flat #10 x .016	K003 and On	36
110	AN6-34	Bolt, 3/8-24 x 3-19/32" Drilled Shank	K003 and On	4
120	NAS1149F0632P	Washer, Flat 3/8 x .032	K003 and On	8
130	AN310-6	Nut, Castellated, Steel 3/8-24	K003 and On	4
140	MS24665-285	Pin, Cotter, Cad Steel Ø .094 x 1.00	K003 and On	4
150	AN3-13	Bolt, 10-32 x 1-13/32" Drilled Shank	K003 and On	4
160	NAS1149F0363P	Washer, Flat #10 x .063	K003 and On	8
170	AN310-3	Nut, Castellated, Steel 10-32	K003 and On	12
180	MS24665-132	Pin, Cotter, Cad Steel Ø .062 x .50	K003 and On	12
190	AN3-10	Bolt, 10-32 x 1-1/32" Drilled Shank	K003 and On	4
200	NAS1149F0332P	Washer, Flat #10 x .032	K003 and On	24
210	AN3-14A	Bolt, 10-32 x 1-17/32" Undrilled	K003 and On	12
220	MS21044N3	Nut, Self-locking, Steel 10-32	K003 and On	12
230	AN3-7	Bolt, 10-32 x 29/32" Drilled Shank	K003 and On	8

* Alternate Part Number

Figure 27-20.6: Rudder Trim Tab Servo

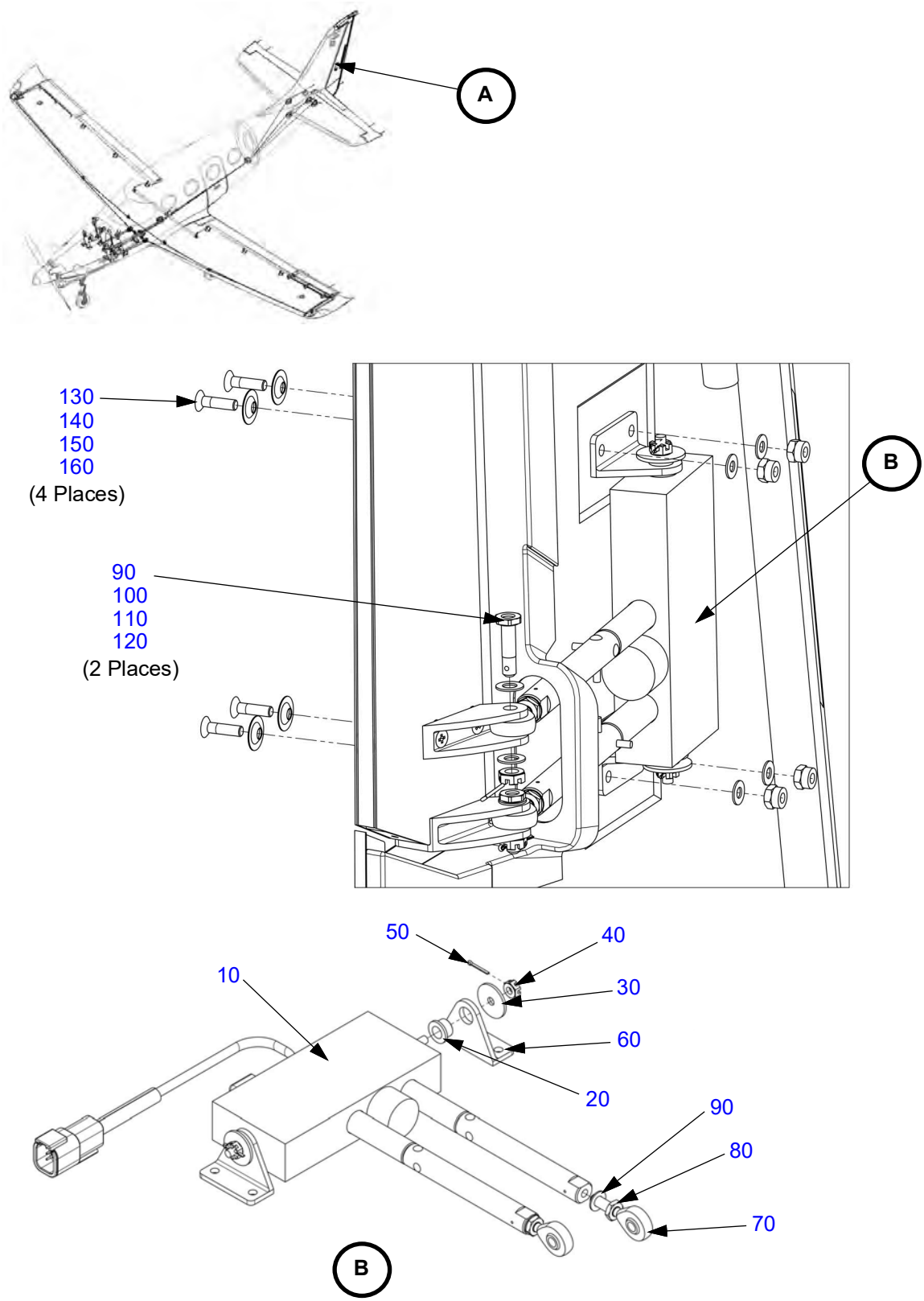

Table 27-20.6: Rudder Trim Tab Servo

Figure Item Number	Part Number	Part Name	Effectivity Code	Amount in Assy.
10	AK99003001	Trim Tab Actuator	K003 and On	1
20	NAS77A5-25	Bushing, Flanged .313 ID x .439 OD x 0.250 Grip	K003 and On	2
30	AN970-3	Washer, Flat #10 x .063	K003 and On	2
40	AN320-3	Nut, Castellated, Shear, Steel 10-32	K003 and On	2
50	MS24665-132	Pin, Cotter, Cad Steel Ø .062 x .50	K003 and On	2
60	PK55405002	Bracket, Rdr Trim Actuator	K003 and On	2
70	M81935/4-4	Rod-end, Male, No Keyway Ø .250 Bearing Bore	K003 and On	2
80	AN316-4R	Nut, Jam, Hexagon, Cad Steel 1/4-28	K003 and On	2
90	NAS1149F0432P	Washer, Flat 1/4 x .032	K003 and On	6
100	NAS6204-10D	Bolt, 1/4-28 x .625 Grip, Drilled Shank	K003 and On	2
110	AN320-4	Nut, Castellated, Shear, Steel 1/4-28	K003 and On	2
120	MS24665-134	Pin, Cotter, Cad Steel Ø .062 x .75	K003 and On	2
130	MS24694-S53	Screw, Machine, C'sunk Ø .190 x 23/32	K003 and On	2
140	NAS1169C10L	Washer, Dimpled, CRES No. 10 x .016	K003 and On	4
150	NAS1149F0332P	Washer, Flat #10 x .032	K003 and On	4
160	MS21044N3	Nut, Self-locking, Steel 10-32	K003 and On	4

This Page Intentionally Left Blank

ELEVATOR AND TAB

Figure 27-30.1: Elevator Cables

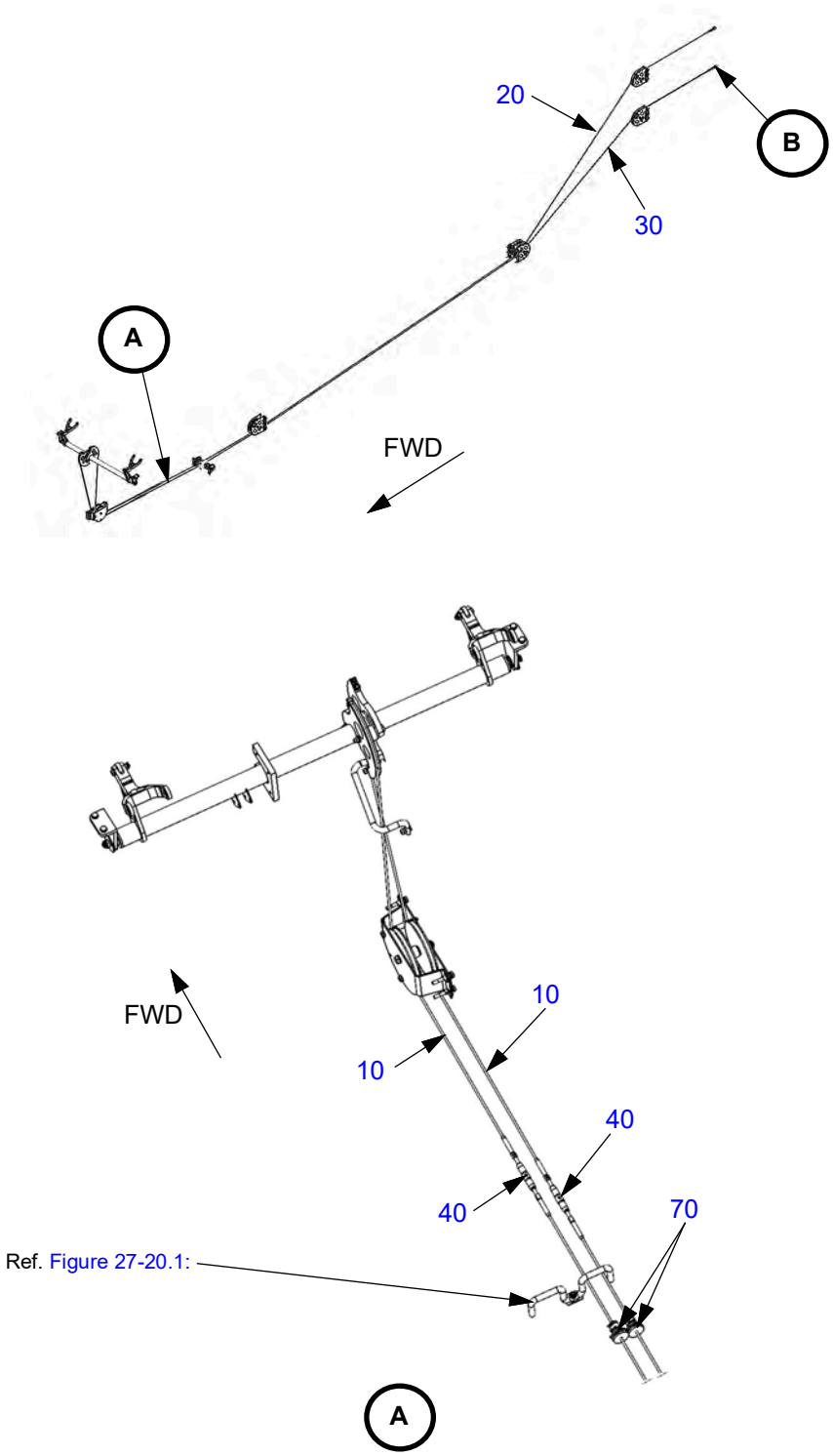

Figure 27-30.1: Elevator Cables (Continued)

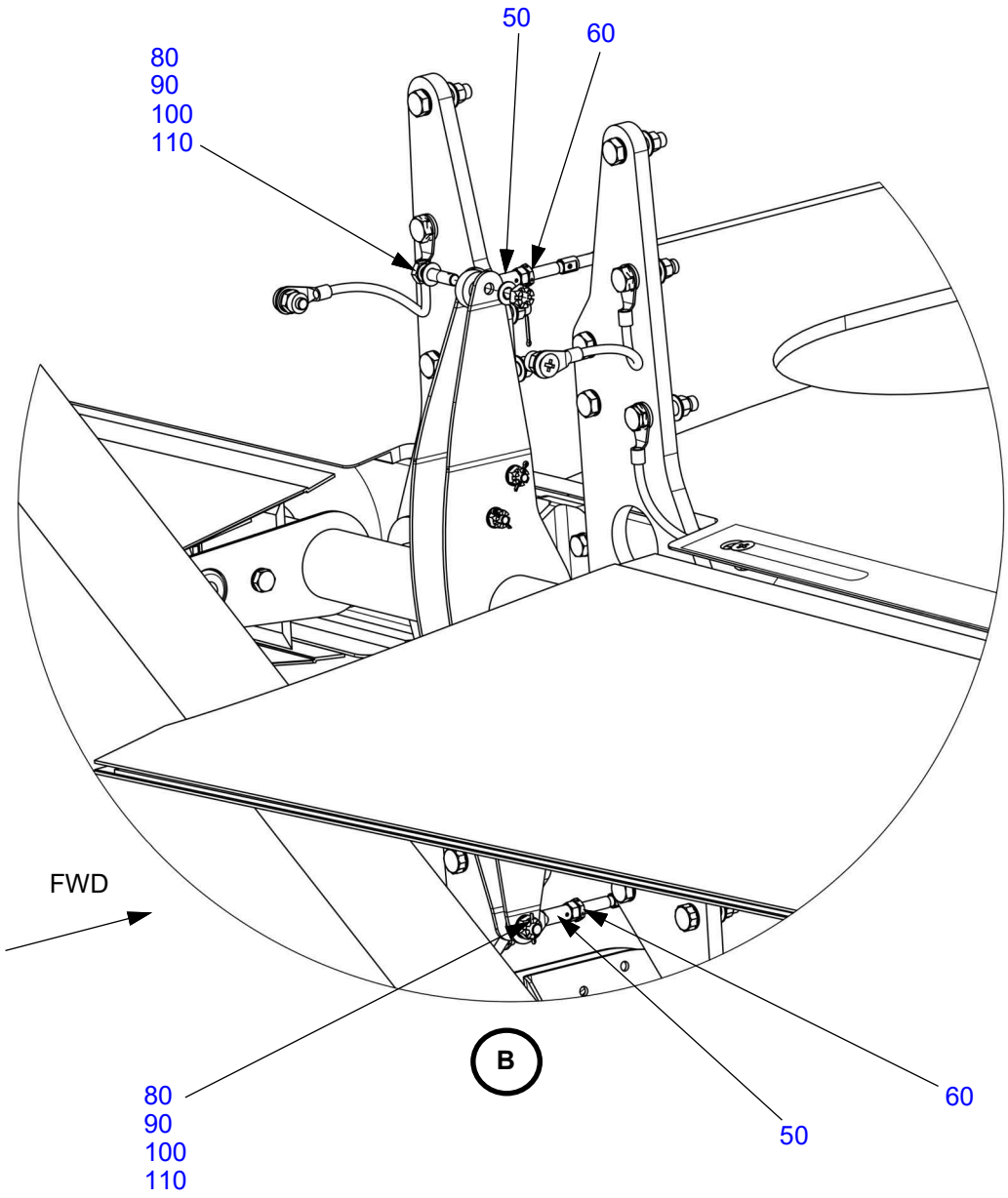

Table 27-30.1: Elevator Cables

Figure Item Number	Part Number	Part Name	Effectivity Code	Amount in Assy.
10	AK27302100	Cable Assy, Elevator, Fwd	K003 and On	2
20	AK27302200	Cable Assy, Elevator, Upper, Aft	K003 and On	1
30	AK27302100	Cable Assy, Elevator, Lower, Aft	K003 and On	1
40	MS21251-B5S	Turnbuckle, Brass, Short 1/4-28 Thread	K003 and On	2
50	M81935/5-04	Rod-end, Female, No Keyway Ø .250 Bearing Bore	K003 and On	2
	M81935/9-04	Rod-end, Female, No Keyway Ø .250 Bearing Bore (Alternate)	K003 and On	2
60	NAS1423C4	Nut, Jam, Drilled, CRES 1/4-28	K003 and On	2
70	AK99005001	Control Cable Seal	K003 and On	2
80	AN4-10	Bolt, 1/4-28 x 1-1/32" Drilled Shank	K003 and On	2
90	NAS1149F0432P	Washer, Flat 1/4 x .032	K003 and On	4
100	AN310-4	Nut, Castellated, Steel 1/4-28	K003 and On	4
110	MS24665-132	Pin, Cotter, Cad Steel Ø .062 x .50	K003 and On	2

Figure 27-30.2: Elevator Cable Seals

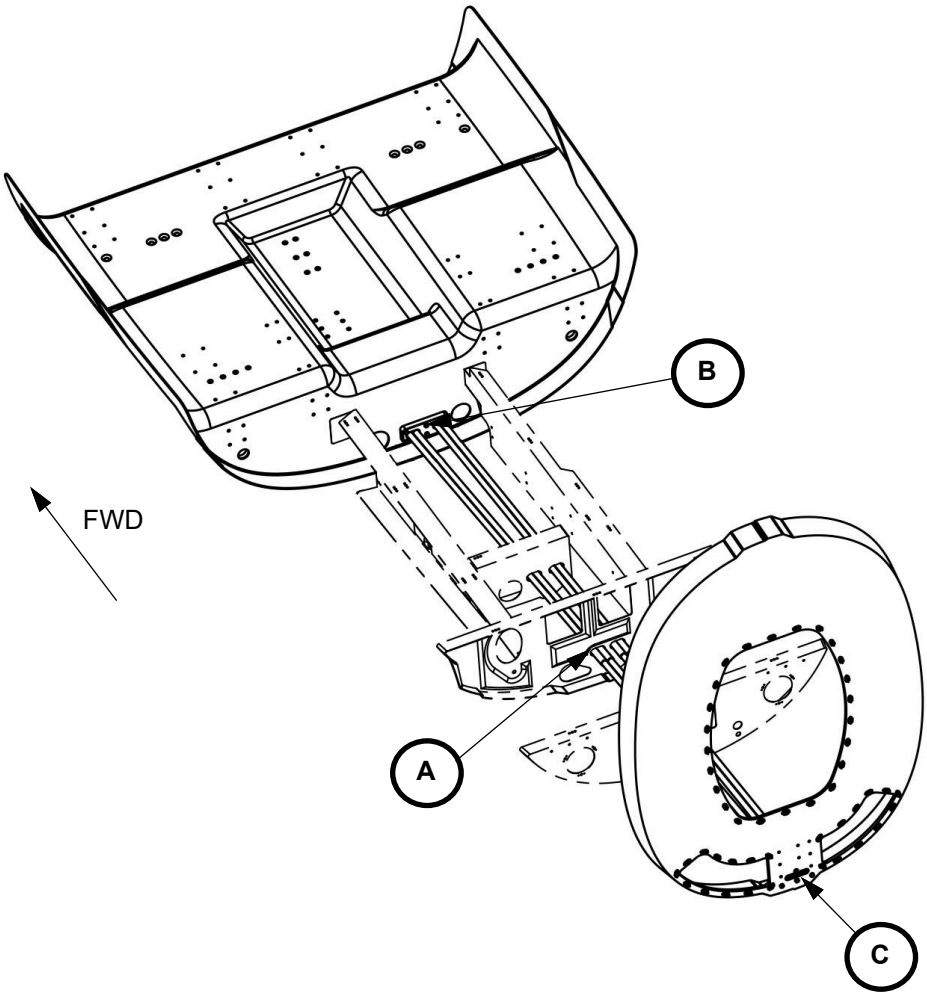

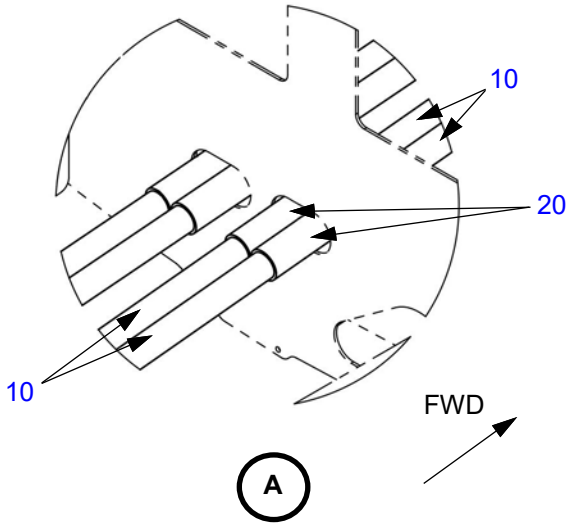

Figure 27-30.2: Elevator Cable Seals (Continued)

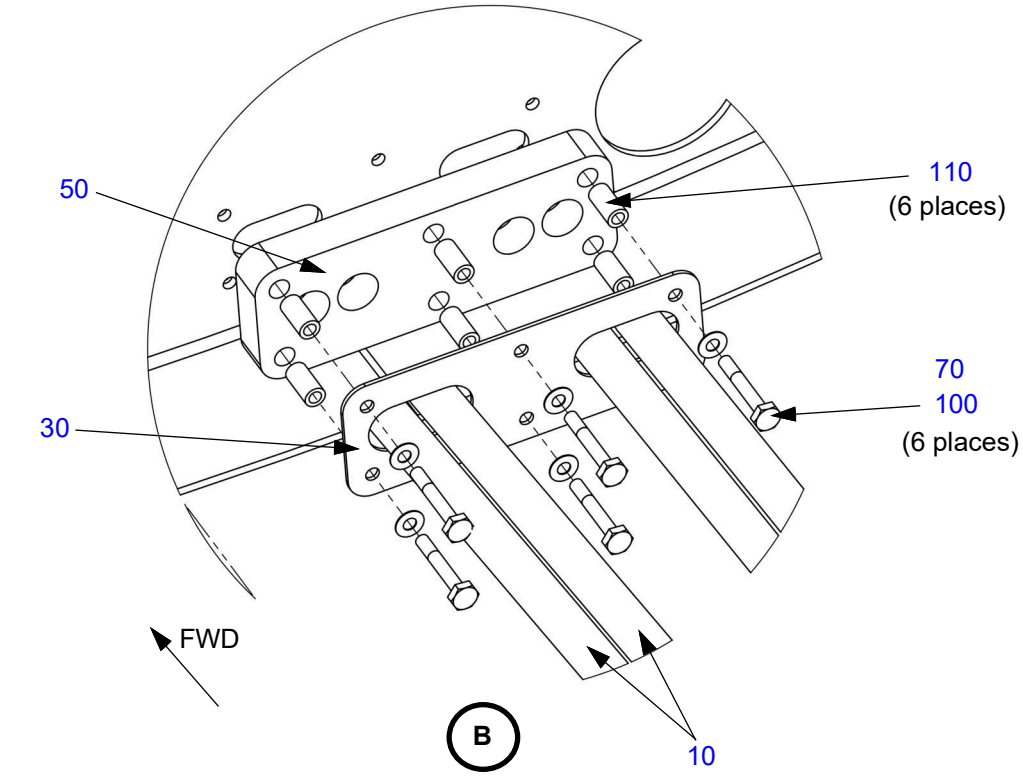

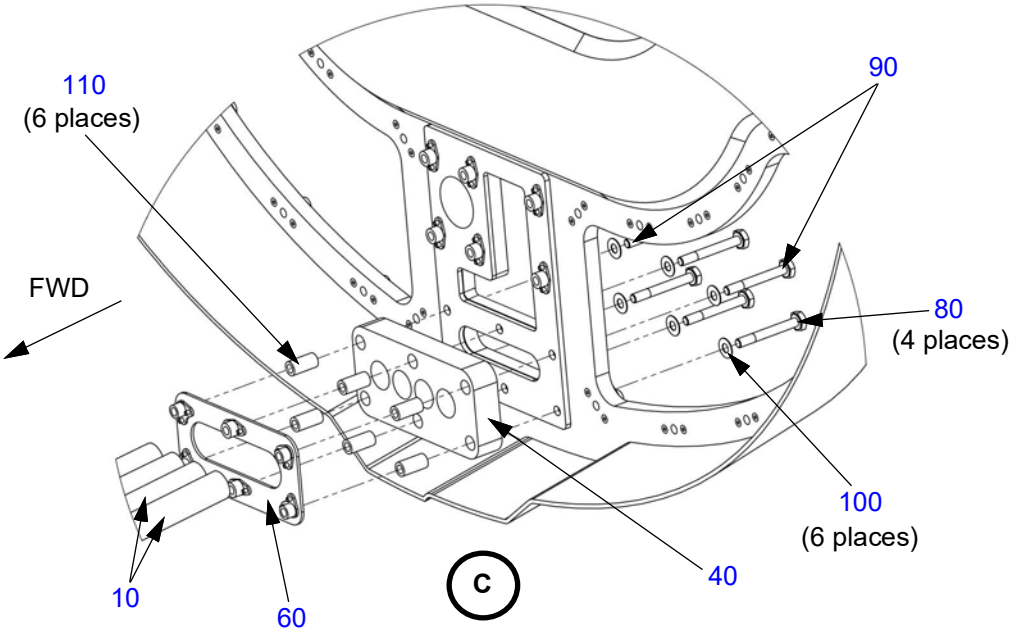

Table 27-30.2: Elevator Cable Seals

Figure Item Number	Part Number	Part Name	Effectivity Code	Amount in Assy.
10	PK27004005	Cable Tube, Elev And Rdr	K003 and On	4
20	PK27004006	Cable Tube Coupler, Elev And Rdr	K003 and On	2
30	PK27004002	Seal Block Backing Plate, Elev And Rdr, Fwd	K003 and On	1
40	PK27004003	Seal Block, Elev And Rdr, Aft	K003 and On	1
50	PK27004004	Seal Block, Elev And Rdr, Fwd	K003 and On	1
60	AK27004001	Assembly, Backing Plate, Aft Pressure Bulkhead	K003 and On	1
70	AN3-12A	Bolt, 10-32 x 1-9/32" Undrilled	K003 and On	6
80	AN3-14A	Bolt, 10-32 x 1-17/32" Undrilled	K003 and On	4
90	AN3-15A	Bolt, 10-32 x 1-21/32" Undrilled	K003 and On	2
100	NAS1149F0316P	Washer, Flat #10 x .016	K003 and On	12
110	NAS42HT6B-40	Spacer, Steel .193 ID x .312 OD x .625	K003 and On	12

Figure 27-30.3: Elevator Pulleys

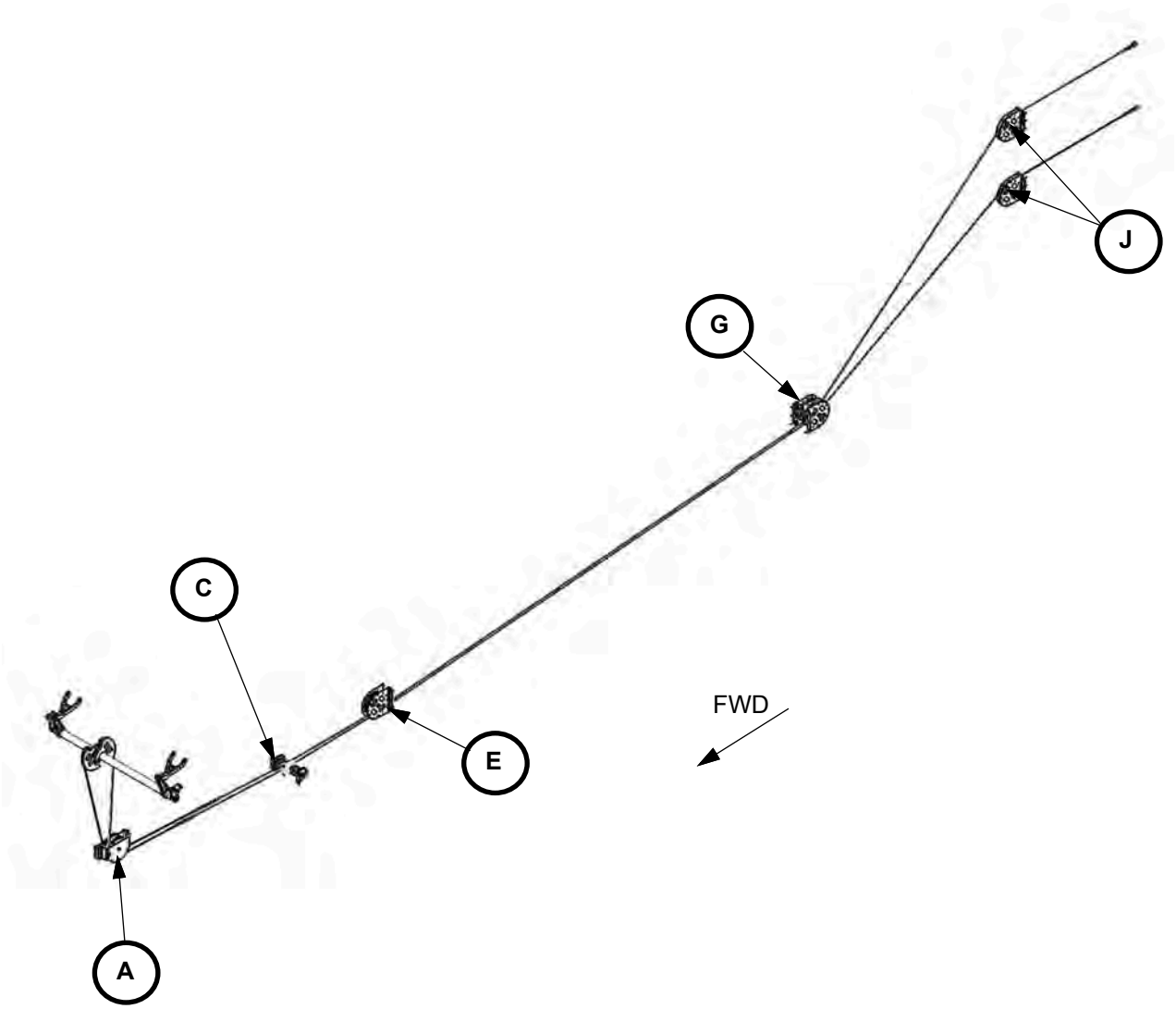

Figure 27-30.3: Elevator Pulleys (Continued)

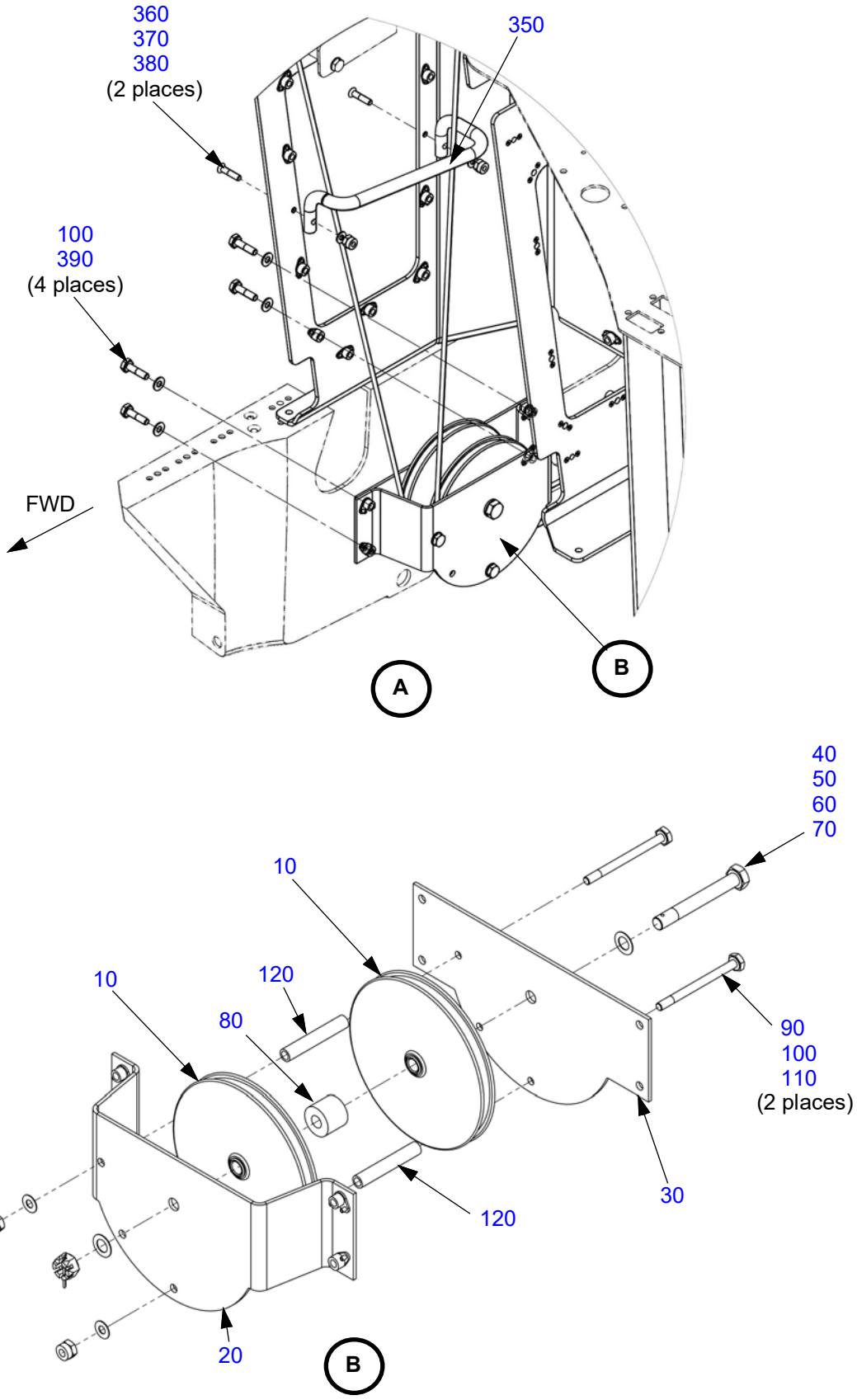

Figure 27-30.3: Elevator Pulleys (Continued)

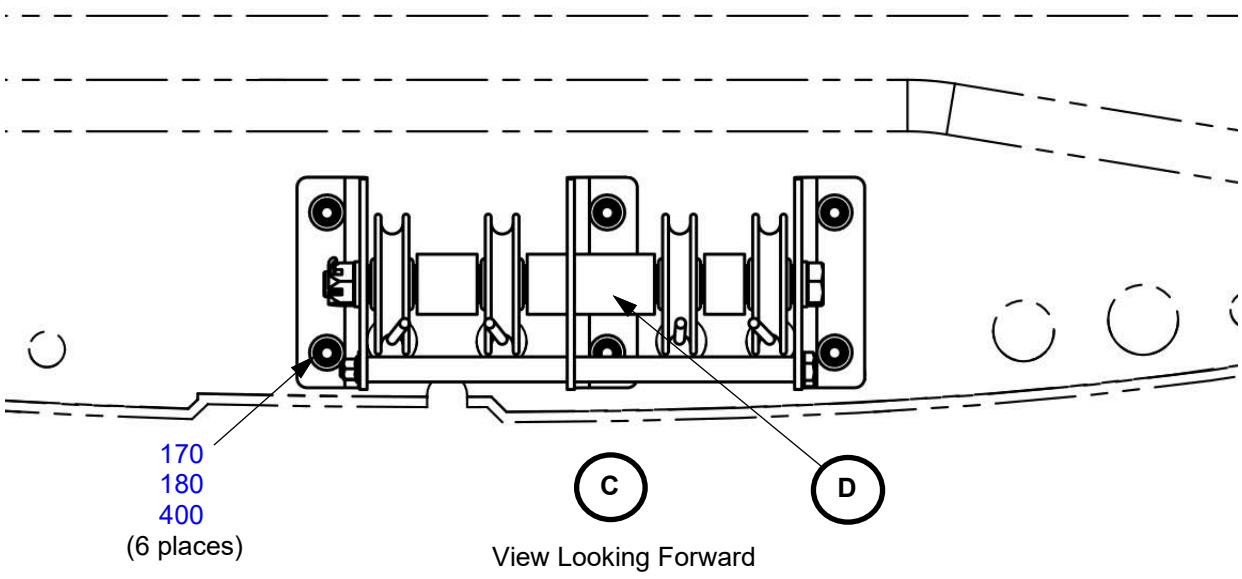

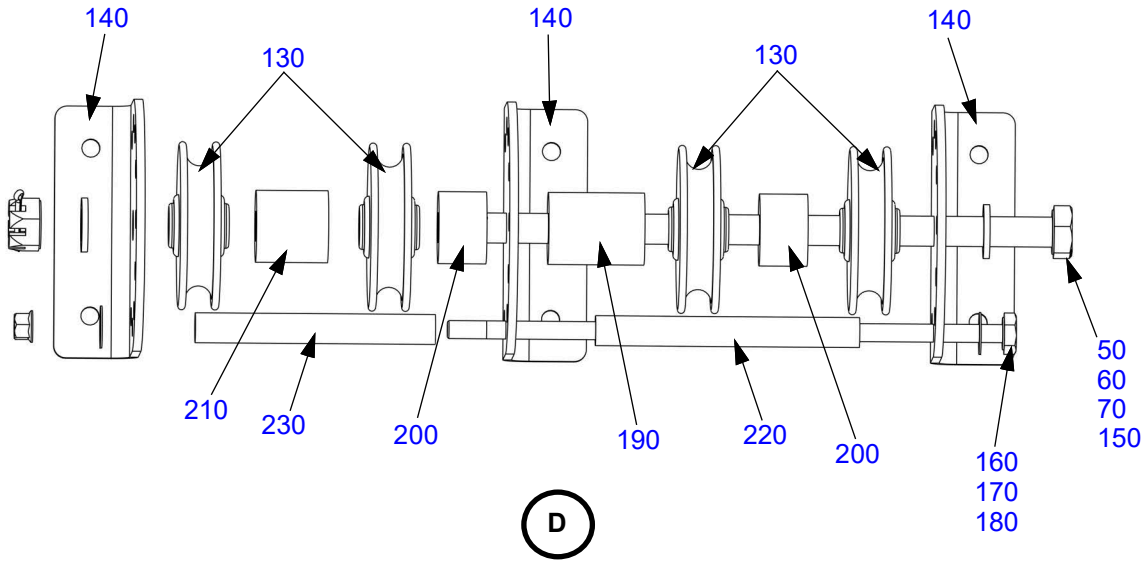

Figure 27-30.3: Elevator Pulleys (Continued)

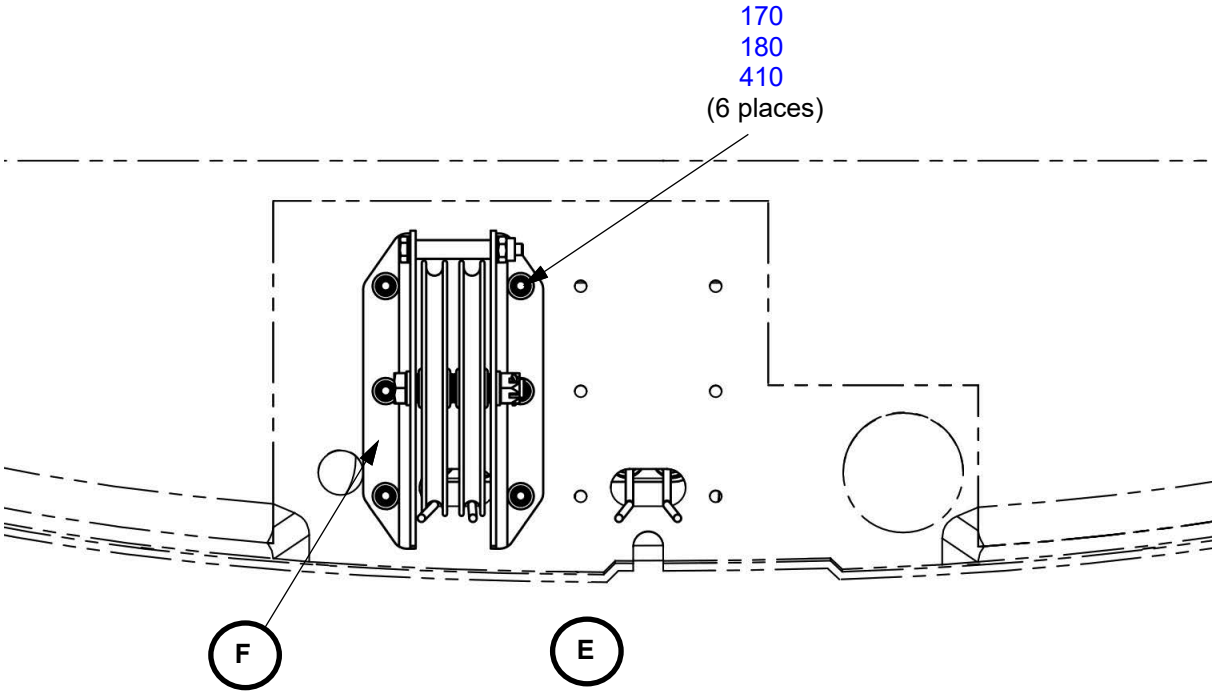

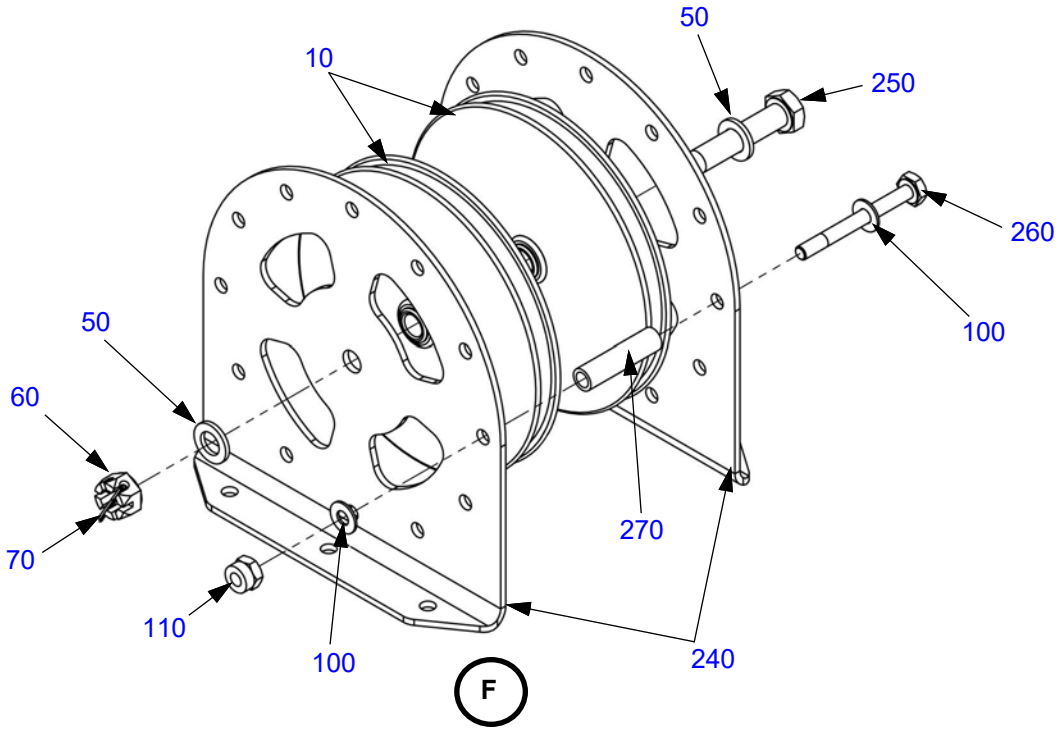

Figure 27-30.3: Elevator Pulleys (Continued)

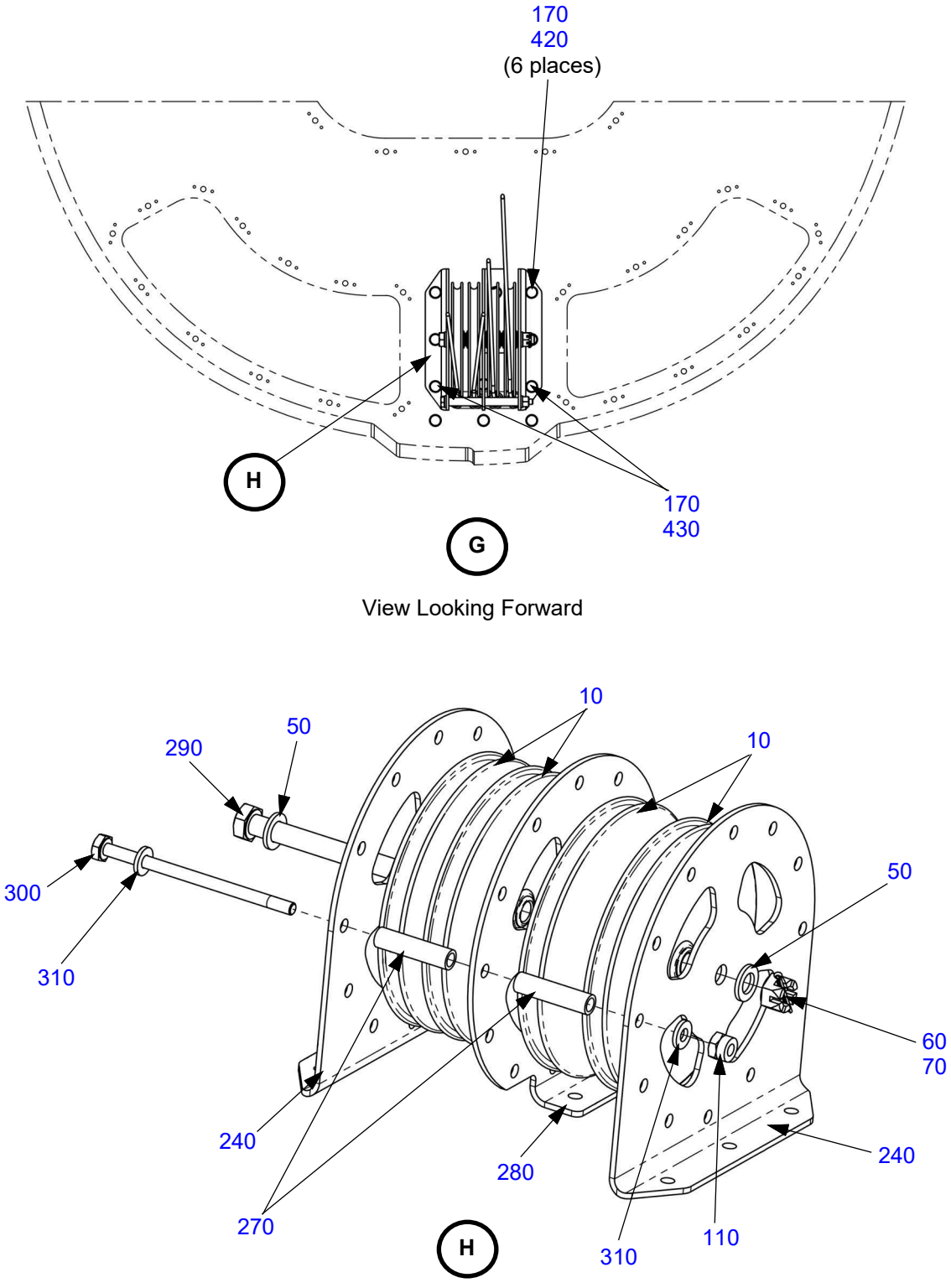

Figure 27-30.3: Elevator Pulleys (Continued)

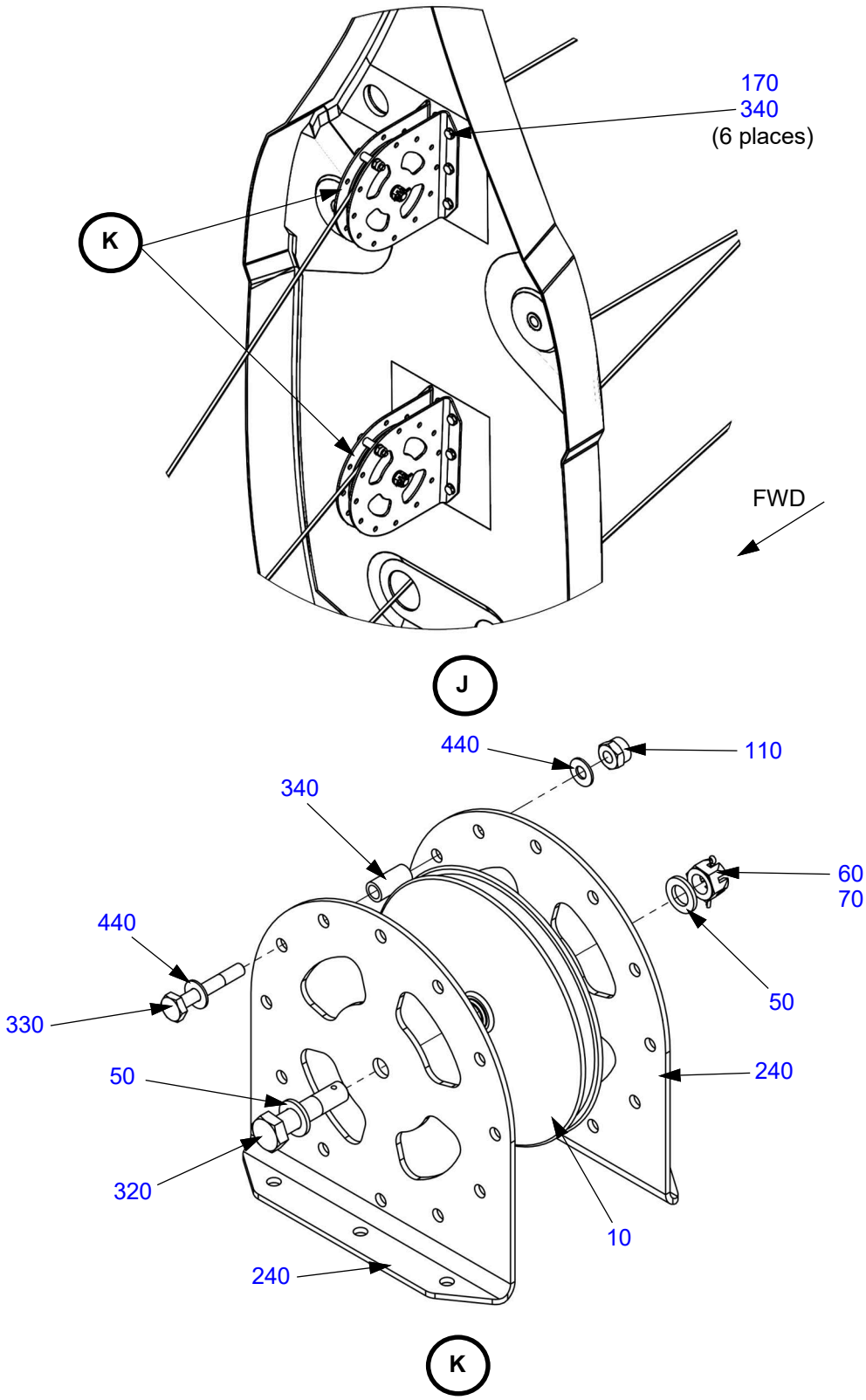

Table 27-30.3: Elevator Pulleys

Figure Item Number	Part Number	Part Name	Effectivity Code	Amount in Assy.
10	MS20220-3	Pulley, Groove, Nonmetallic Sheave 4.250 OD	K003 and On	10
20	PK27304001	Plate, Elevator Pulley, Upper	K003 and On	1
30	PK27304002	Plate, Elevator Pulley, Lower	K003 and On	1
40	AN5-24	Bolt, 5/16-24 x 2-19/32" Drilled Shank	K003 and On	1
50	NAS1149F0563P	Washer, Flat 5/16 x .063	K003 and On	12
60	AN310-5	Nut, Castellated, Steel 5/16-24	K003 and On	6
70	MS24665-134	Pin, Cotter, Cad Steel Ø .062 x .75	K003 and On	6
80	PK27304005	5/16" ID x 3/4" OD x 5/8" Lg Spacer, Aluminum	K003 and On	1
90	AN3-24A	Bolt, 10-32 x 2-17/32" Undrilled	K003 and On	2
100	NAS1149F0332P	Washer, Flat #10 x .032	K003 and On	10
110	MS21044N3	Nut, Self-locking, Steel 10-32	K003 and On	6
120	NAS43DD3-120N	Spacer, Aluminum .214 ID x .312 OD x 1.875	K003 and On	2
130	MS20220-1	Pulley, Groove, Nonmetallic Sheave 1.750 OD	K003 and On	4
140	PK27002300	Pulley Bracket, Universal, Small	K003 and On	3
150	AN5-60	Bolt, 5/16-24 x 6-3/32" Drilled Shank	K003 and On	1
160	AN3-56A	Bolt, 10-32 x 5-25/32" Undrilled	K003 and On	1
170	NAS1149F0316P	Washer, Flat #10 x .016	K003 and On	34
180	MS21042L3	Nut, Self-locking, 450°, Reduced #10-32	K003 and On	13
190	PK27002301	Pulley Spacer, 5/16" ID x 3/4" OD x 1" Lg	K003 and On	1
200	PK27002302	Pulley Spacer, 5/16" ID x 3/4" OD x 1/2" Lg	K003 and On	2
210	PK27002303	Pulley Spacer, 5/16" ID x 3/4" OD x 3/4" Lg	K003 and On	1

Figure Item Number	Part Number	Part Name	Effectivity Code	Amount in Assy.
220	NAS43DD3-176N	Spacer, Aluminum .214 ID x .312 OD x 2.750	K003 and On	1
230	NAS43DD3-160N	Spacer, Aluminum .214 ID x .312 OD x 2.500	K003 and On	1
240	PK27002000	Pulley Bracket, Universal, Large	K003 and On	8
250	AN5-17	Bolt, 5/16-24 x 1-31/32" Drilled Shank	K003 and On	1
260	AN3-16A	Bolt, 10-32 x 1-29/32" Undrilled	K003 and On	1
270	NAS43DD3-80N	Spacer, Aluminum .214 ID x .312 OD x 1.250	K003 and On	3
280	PK27002200	Pulley Bracket, Universal, Clearance	K003 and On	1
290	AN5-32	Bolt, 5/16-24 x 3-11/32" Drilled Shank	K003 and On	1
300	AN3-31A	Bolt, 10-32 x 1-29/32" Undrilled	K003 and On	1
310	NAS1149F0316P	Washer, Flat #10 x .016	K003 and On	2
320	AN5-12	Bolt, 5/16-24 x 1-11/32" Drilled Shank	K003 and On	2
330	AN3-12A	Bolt, 10-32 x 1-9/32" Undrilled	K003 and On	2
340	NAS43DD3-40N	Spacer, Aluminum .214 ID x .312 OD x .625	K003 and On	2
350	PK27304006	Cable Fairlead Bracket, Fwd Elevator Cables	K003 and On	1
360	MS24694-S8	Screw, Machine, C'sunk Ø .164 x 25/32	K003 and On	2
370	NAS1149FN832P	Washer, Flat #8 x .032	K003 and On	2
380	MS21044N08	Nut, Self-locking, Steel .164-32	K003 and On	2
390	AN3-6A	Bolt, 10-32 x 25/32" Undrilled	K003 and On	4
400	MS24694-C50	Screw, Machine, C'sunk, CRES Ø .190 x 17/32	K003 and On	6
410	MS24694-C55	Screw, Machine, C'sunk, CRES Ø .190 x 27/32	K003 and On	6
420	AN3-7A	Bolt, 10-32 x 29/32" Undrilled	K003 and On	18
430	AN3-15A	Bolt, 10-32 x 1-21/32" Undrilled	K003 and On	2
440	NAS1149F0363P	Washer, Flat #10 x .063	K003 and On	2

Figure 27-30.4: Elevator Torque Tube

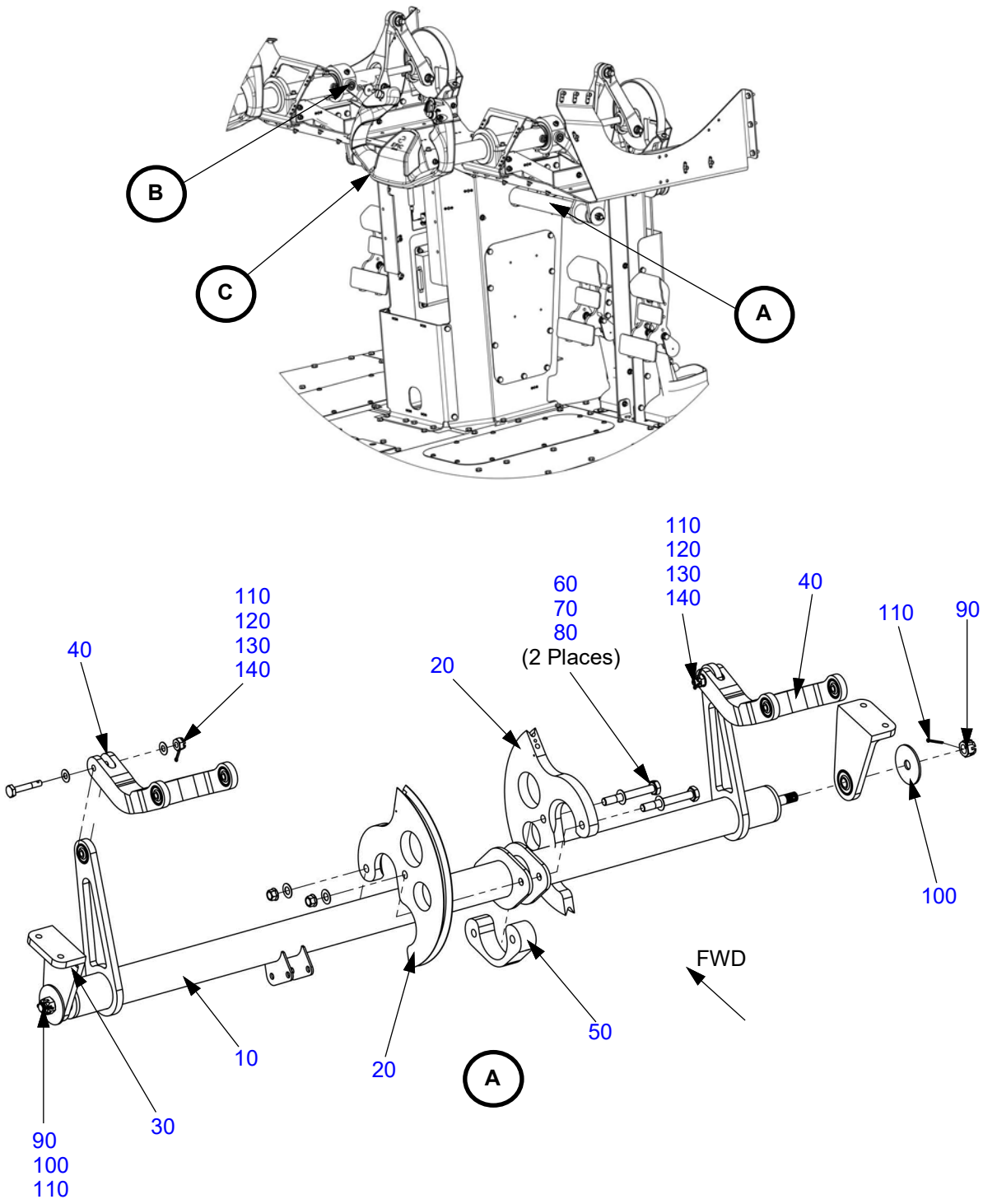

Figure 27-30.4: Elevator Torque Tube (Continued)

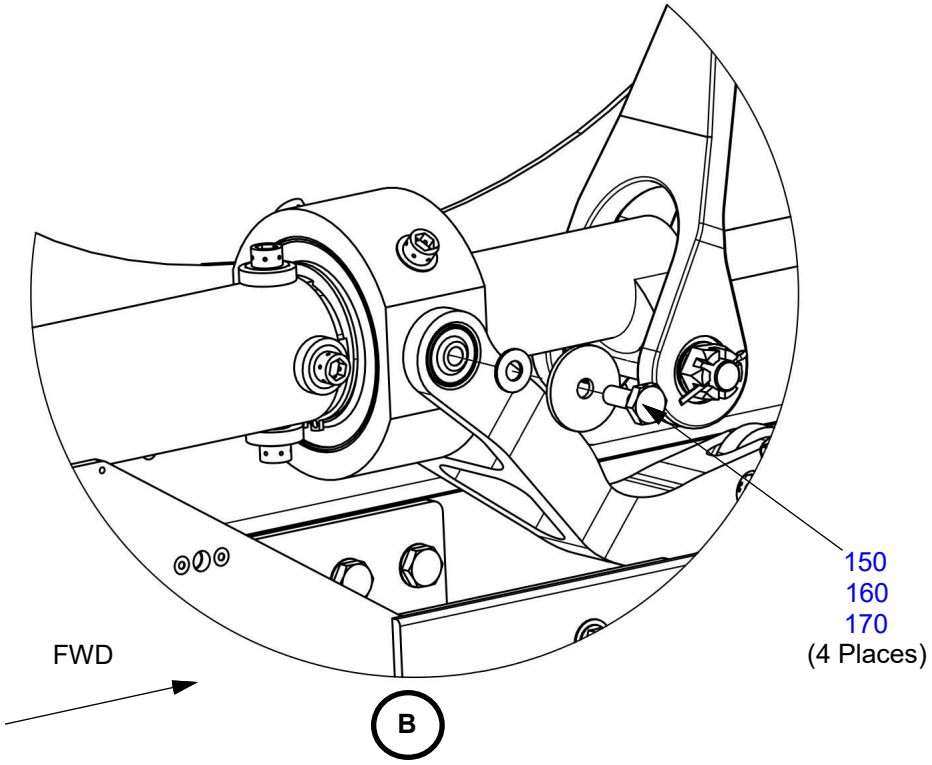

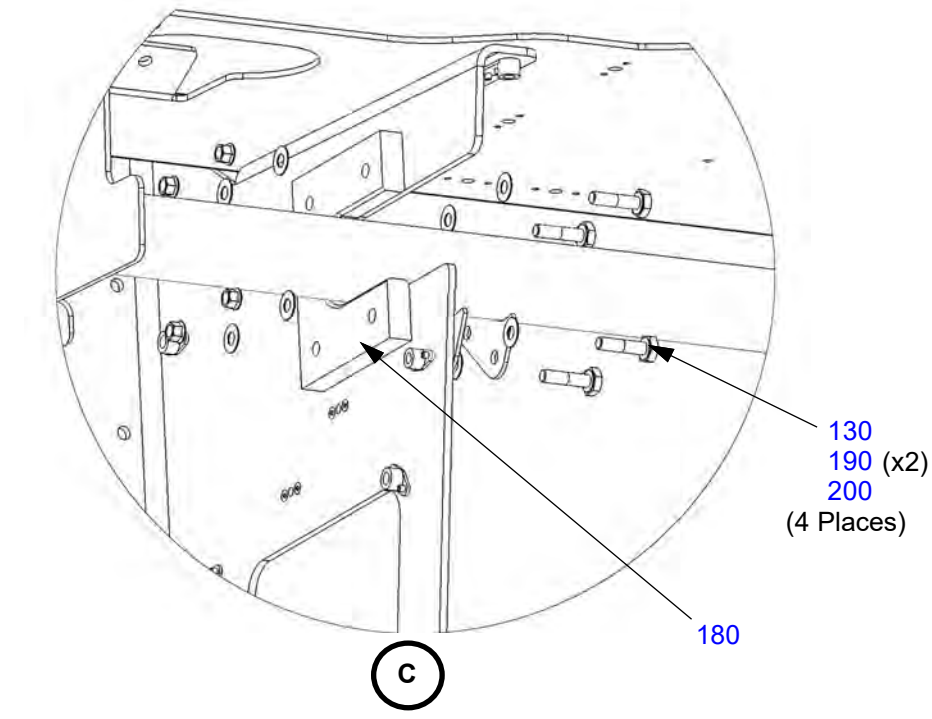

View Looking Aft

Table 27-30.4: Elevator Torque Tube

Figure Item Number	Part Number	Part Name	Effectivity Code	Amount in Assy.
10	AK27301100	Torque Tube Weldment, Elevator, Forward	K003 and On	1
20	PK27301001	Sector, 6.375" OD, Elevator	K003 and On	2
30	PK27301002	Bracket, Elevator Torque Tube	K003 and On	2
40	PK27301003	Link Arm, Elevator	K003 and On	2
50	PK27301004	Spacer, Torque Tube, Elev., Fwd	K003 and On	1
60	AN4-20A	Bolt, 1/4-28 x 2-1/32" Undrilled	K003 and On	2
70	NAS1149F0416P	Washer, Flat 1/4 x .016	K003 and On	4
80	MS21042L4	Nut, Self-locking, 450°, Reduced 1/4-28	K003 and On	2
90	AN310-5	Nut, Castellated, Steel 5/16-24	K003 and On	2
100	AN970-5	Washer, Flat 5/16 x .063	K003 and On	2
110	MS24665-153	Pin, Cotter, CRES Ø .062 x .75	K003 and On	4
120	AN3-11	Bolt, 10-32 x 1-5/32" Drilled Shank	K003 and On	2
130	NAS1149F0316P	Washer, Flat #10 x .016	K003 and On	12
140	AN310-3	Nut, Castellated, Steel 10-32	K003 and On	2
150	AN3H4A	Bolt, 10-32 x 17/32" Drilled Head	K003 - K010	4
	AN3H5A	Bolt, 10-32 x 21/32" Drilled Head	K011 and On	4
160	AN970-3	Washer, Flat #10 x .063	K003 and On	4
170	NAS1149F0332P	Washer, Flat #10 x .032	K003 and On	4
180	PK27001009	Bearing Block, Elevator	K003 and On	1
190	AN3-6A	Bolt, 10-32 x 25/32" Undrilled	K003 and On	4
200	MS21042L3	Nut, Self-locking, 450°, Reduced #10-32	K003 and On	4

Figure 27-30.5: Control Yokes

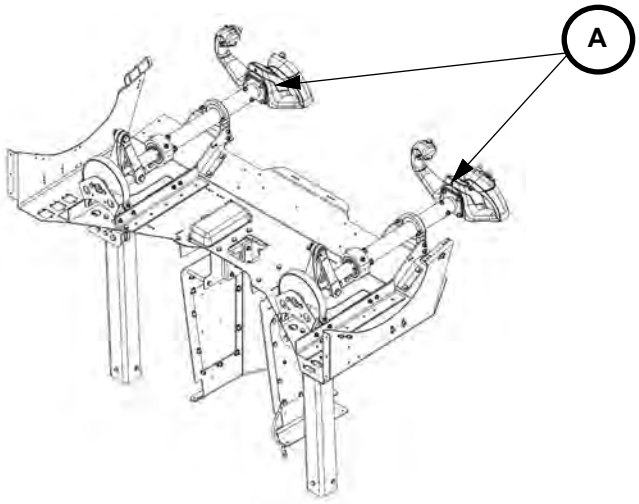

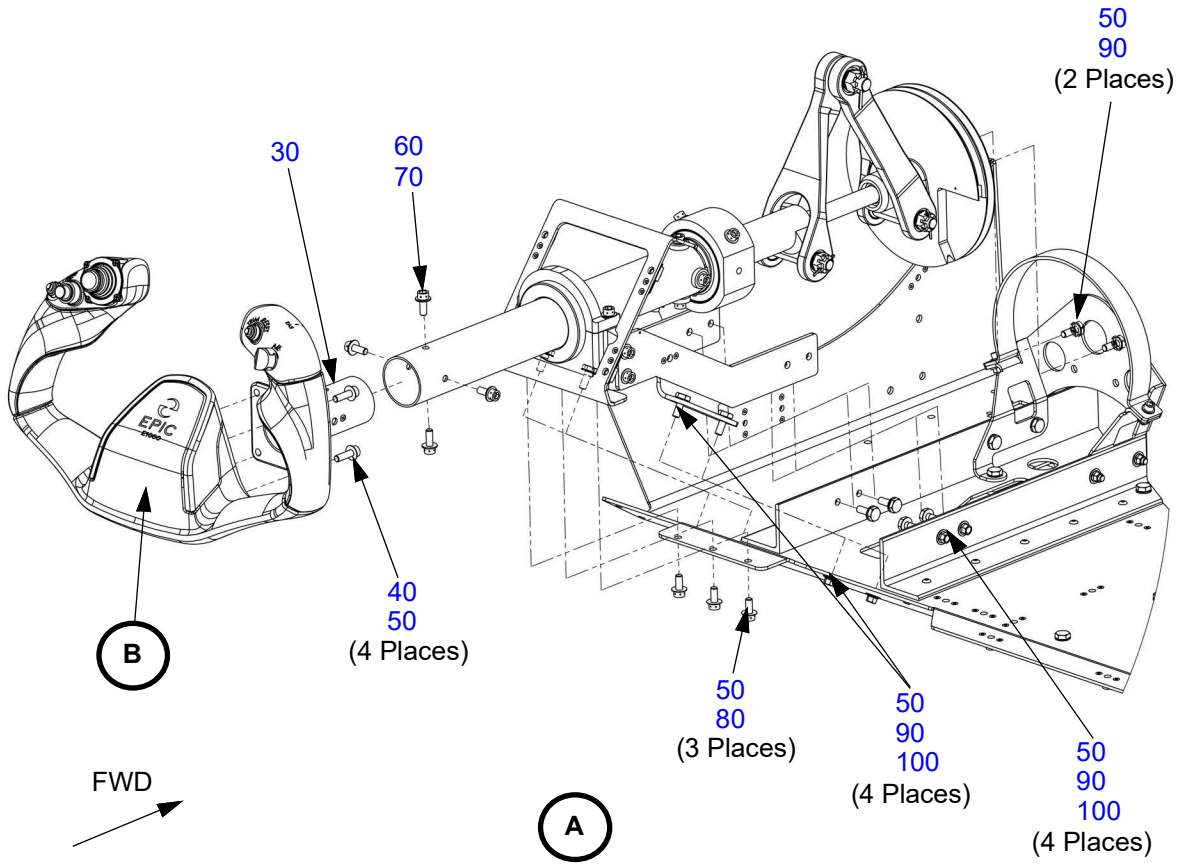

(Pilots side shown, Copilots side similar.)

Figure 27-30.5: Control Yokes (Continued)

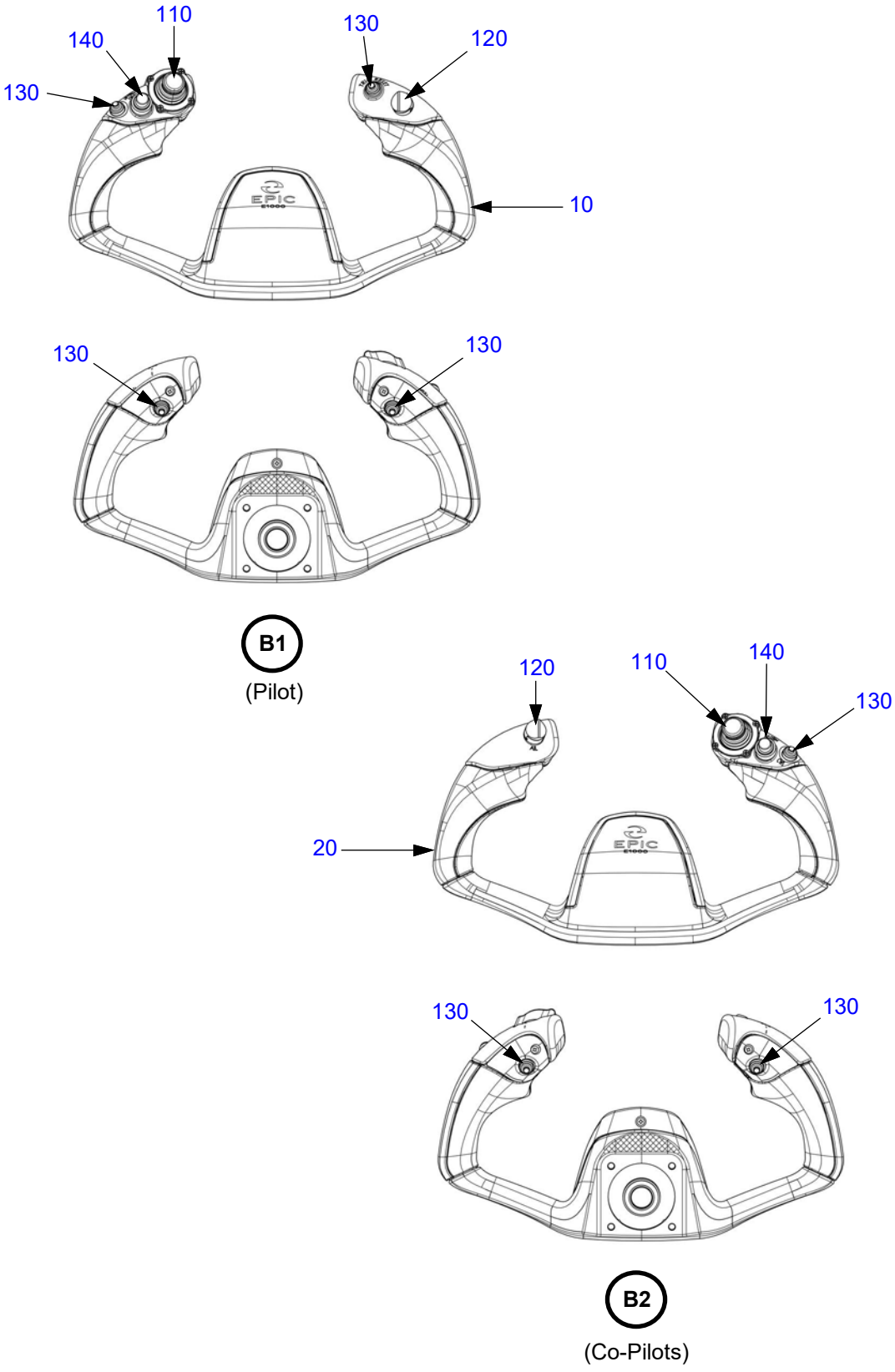

Table 27-30.5: Control Yokes

Figure Item Number	Part Number	Part Name	Effectivity Code	Amount in Assy.
10	AK27011001	Assy, Yoke, Flight Control, Pilot, LH	K003 and On	1
20	AK27011002	Assy, Yoke, Flight Control, Co-Pilot, RH	K003 and On	1
30	AK27001310	Yoke Attach Weldment	K003 and On	2
40	NAS1351-3-10P	Screw, Socket Head Ø .190-32 x .625	K003 and On	8
50	NAS1149F0316P	Washer, Flat #10 x .016	K003 and On	34
60	NAS1351-3H8P	Screw, Socket Head, Drilled Ø .190-32 x .500	K003 and On	8
70	NAS1149F0332P	Washer, Flat #10 x .032	K003 and On	8
80	NAS1351-3H7P	Screw, Socket Head, Drilled Ø .190-32 x .4375	K003 and On	6
90	AN3-4A	Bolt, 10-32 x 17/32" Undrilled	K003 and On	20
100	MS21042L3	Nut, Self-locking, 450°, Reduced #10-32	K003 and On	16
110	HS6T24SA	Switch, Thmbstk, Pushbutton, 100ma, 30v	K003 and On	2
120	SL-2111M1B2	Switch, Slide, 3 Pos, Center Off	K003 and On	2
130	P7-1A5122	Switch, Push Button, 'no', 'nc'	K003 and On	7
140	P4-10220	Switch, Pushbutton, 'off', 'level 1', 'level 2'	K003 and On	2

Figure 27-30.6: Elevator Trim Tab Servo

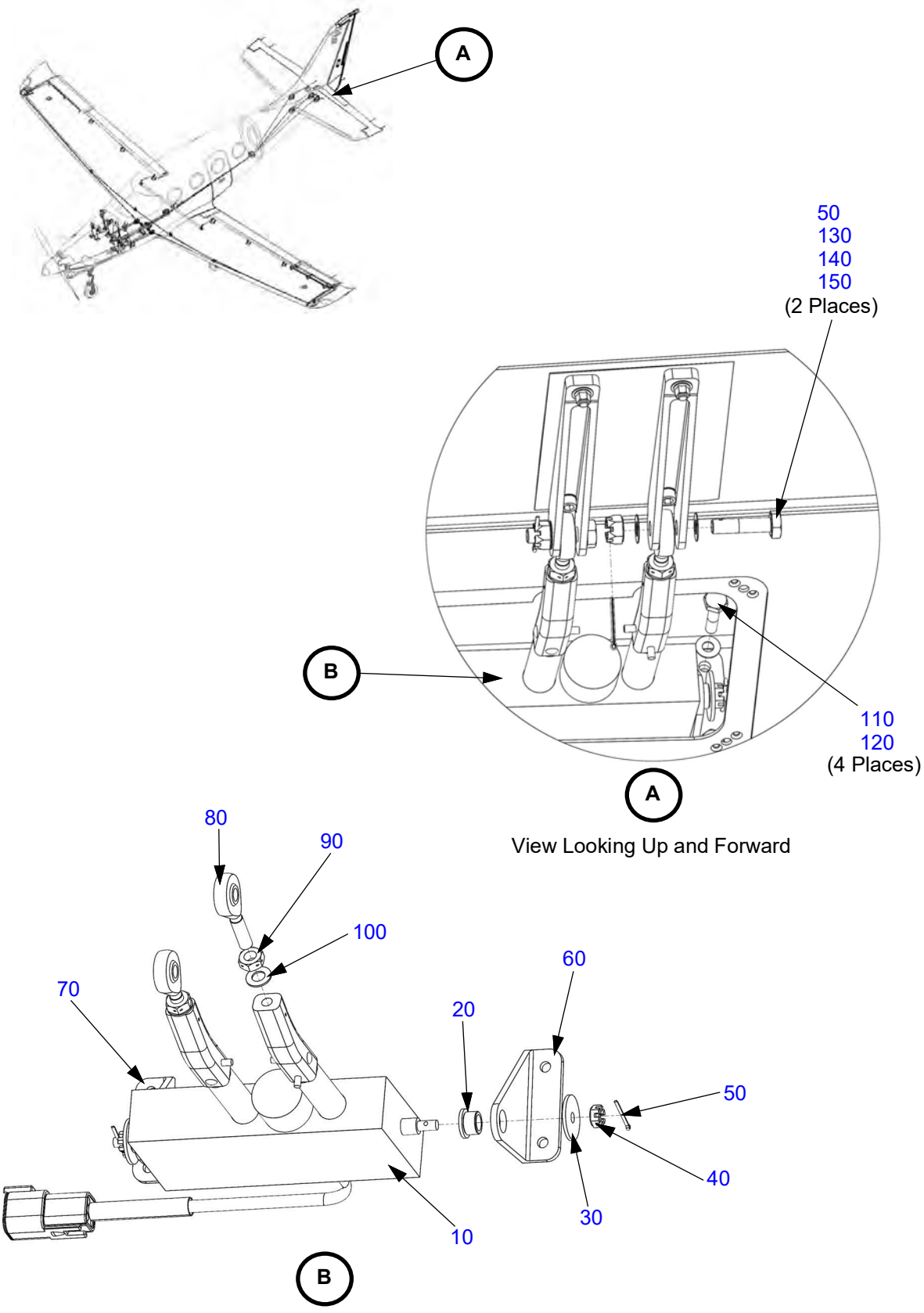

Table 27-30.6: Elevator Trim Tab Servo

Figure Item Number	Part Number	Part Name	Effectivity Code	Amount in Assy.
10	AK99003001	Trim Tab Actuator	K003 and On	1
20	NAS77A5-25	Bushing, Flanged .313 ID x .439 OD x 0.250 Grip	K003 and On	2
30	AN970-3	Washer, Flat #10 x .063	K003 and On	2
40	AN320-3	Nut, Castellated, Shear, Steel 10-32	K003 and On	2
50	MS24665-134	Pin, Cotter, Cad Steel Ø .062 x .75	K003 and On	4
60	PK55204001	Bracket, Inbd, Elevator Trim Actuator Hinge	K003 and On	1
70	PK55204002	Bracket, Outbd, Elevator Trim Actuator Hinge	K003 and On	1
80	M81935/4-4	Rod-end, Male, No Keyway Ø .250 Bearing Bore	K003 and On	2
90	NAS509-4	Nut, Jam, Drilled, Cad Steel 1/4-28	K003 and On	2
100	NAS1149F0432P	Washer, Flat 1/4 x .032	K003 and On	2
110	AN3-7A	Bolt, 10-32 x 29/32" Undrilled	K003 and On	4
120	NAS1149F0316P	Washer, Flat #10 x .016	K003 and On	4
130	AN4-10	Bolt, 1/4-28 x 1-1/32" Drilled Shank	K003 and On	2
140	NAS1149F0416P	Washer, Flat 1/4 x .016	K003 and On	4
150	AN310-4	Nut, Castellated, Steel 1/4-28	K003 and On	2

FLAPS

Figure 27-50.1: Flap Actuator

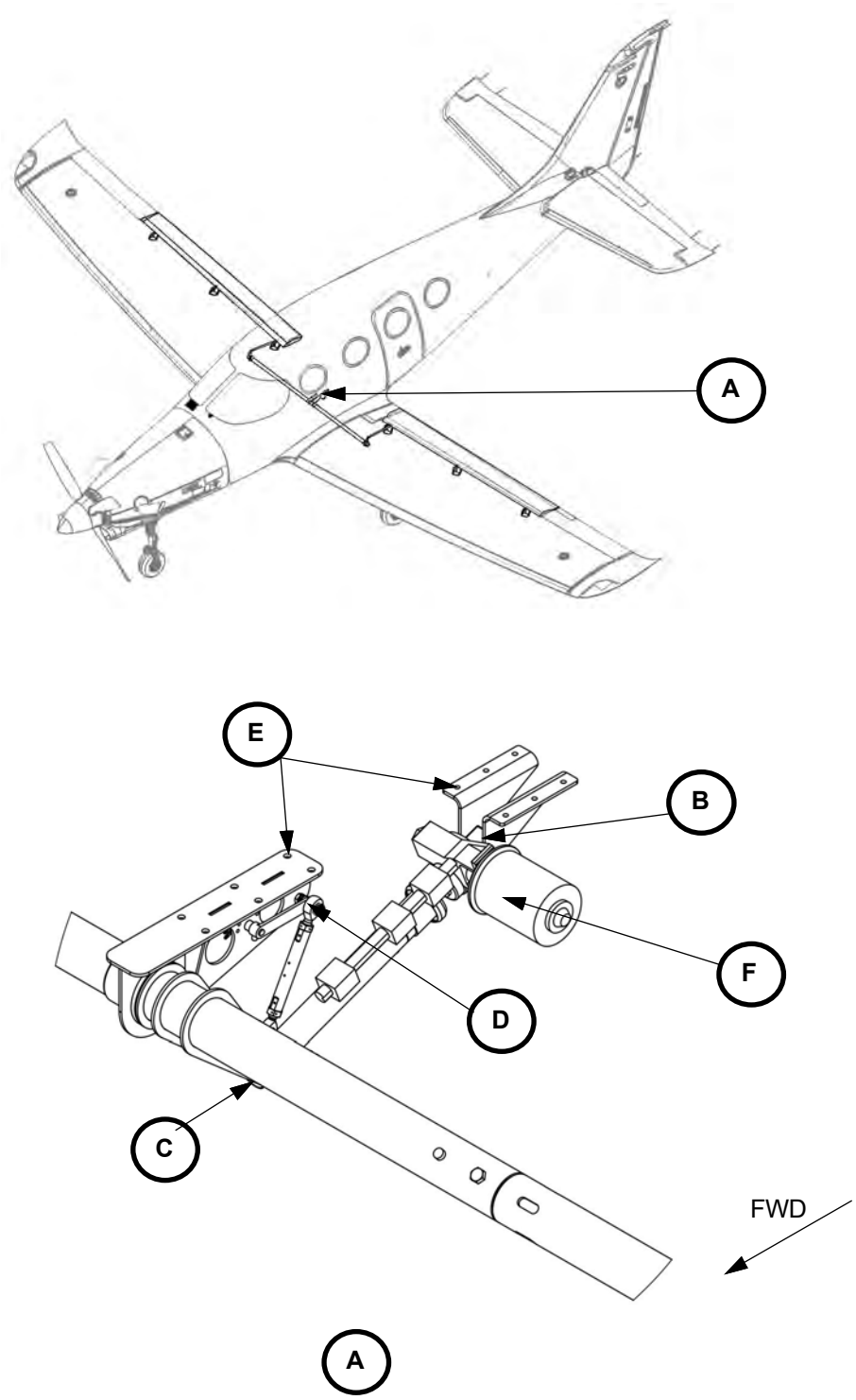

Figure 27-50.1: Flap Actuator (Continued)

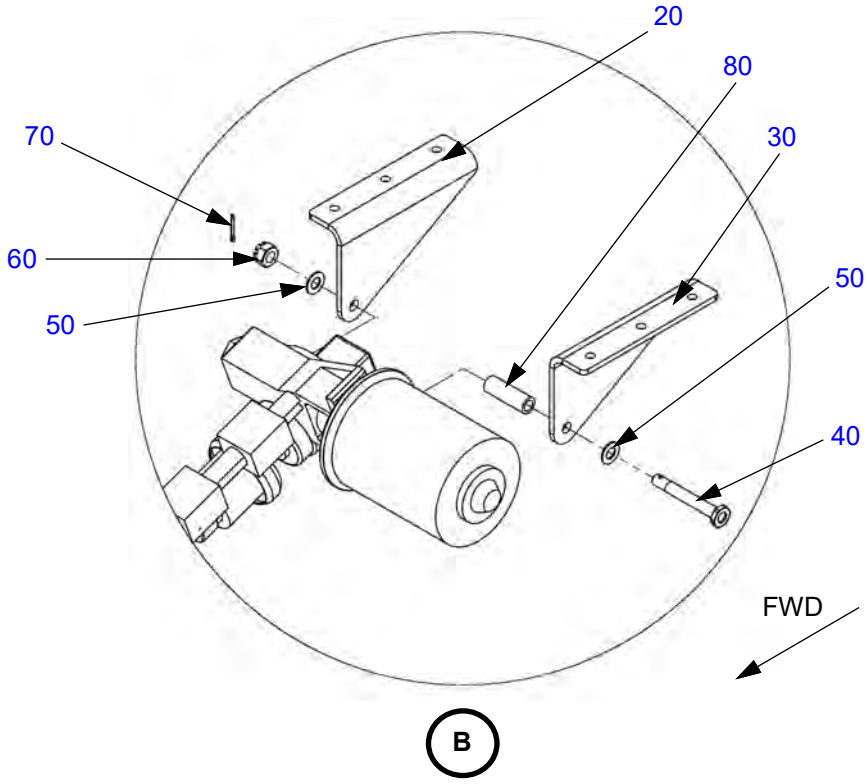

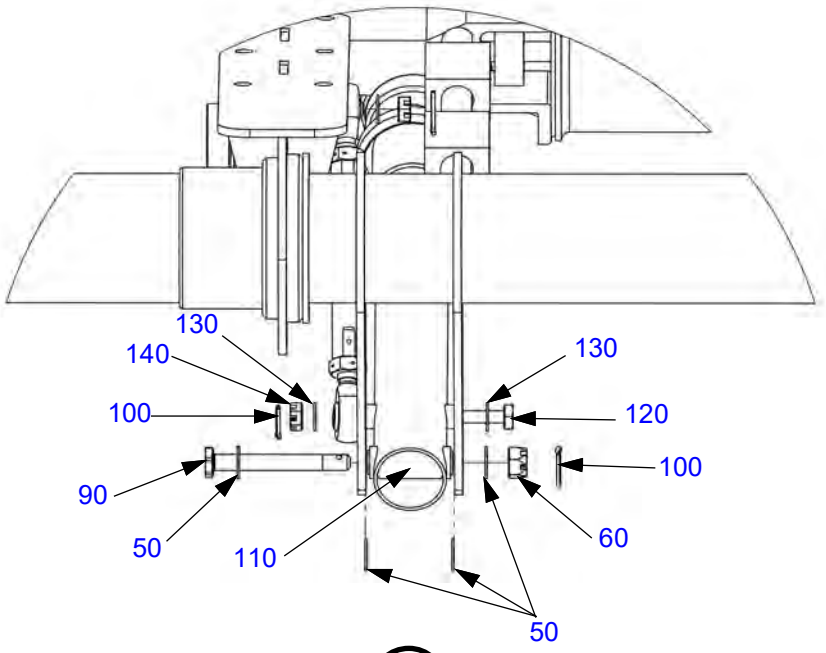

View Looking Aft

Figure 27-50.1: Flap Actuator (Continued)

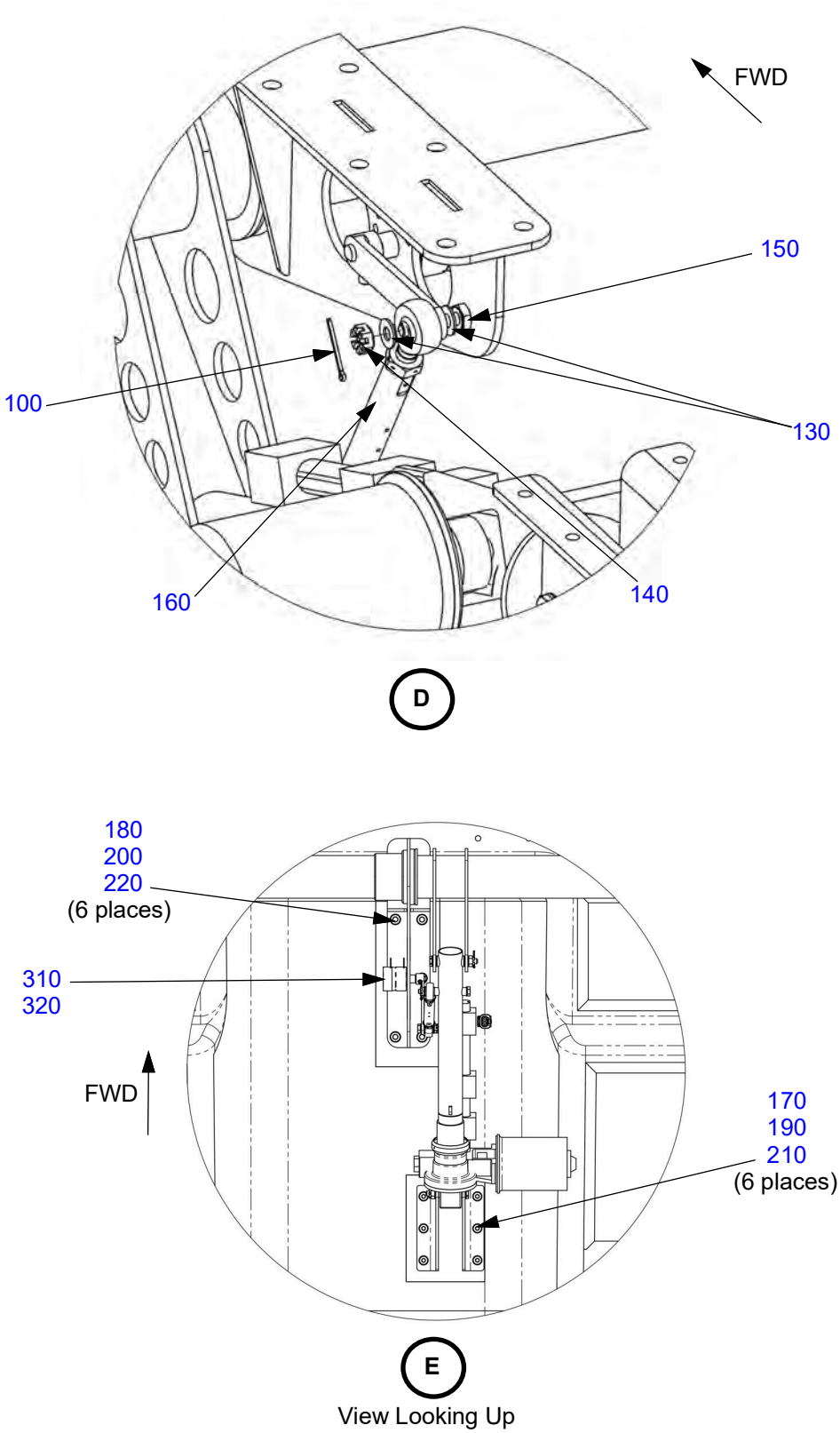

Figure 27-50.1: Flap Actuator (Continued)

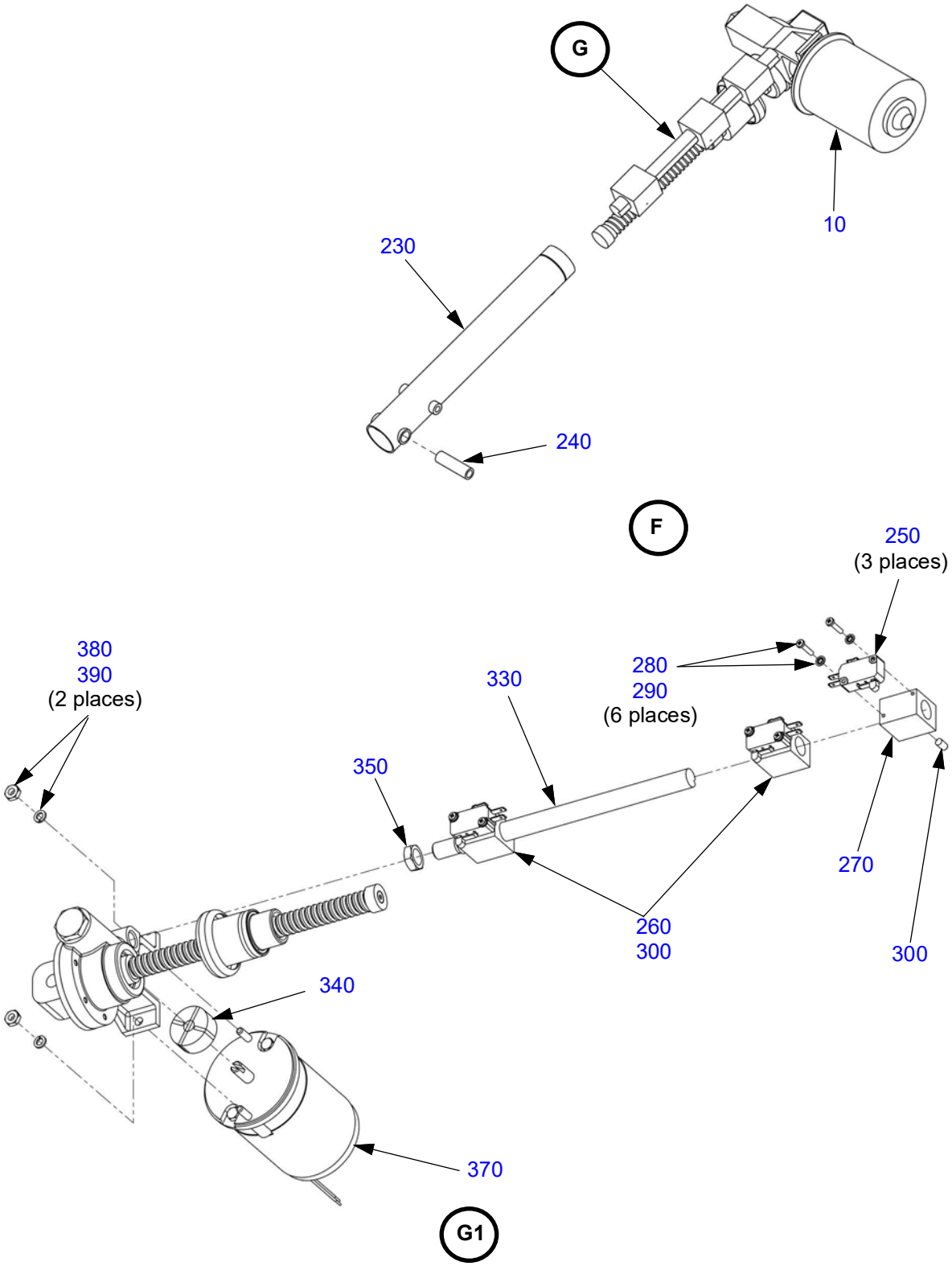

(SN: K003-K032 without SB-0034)

Figure 27-50.1: Flap Actuator (Continued)

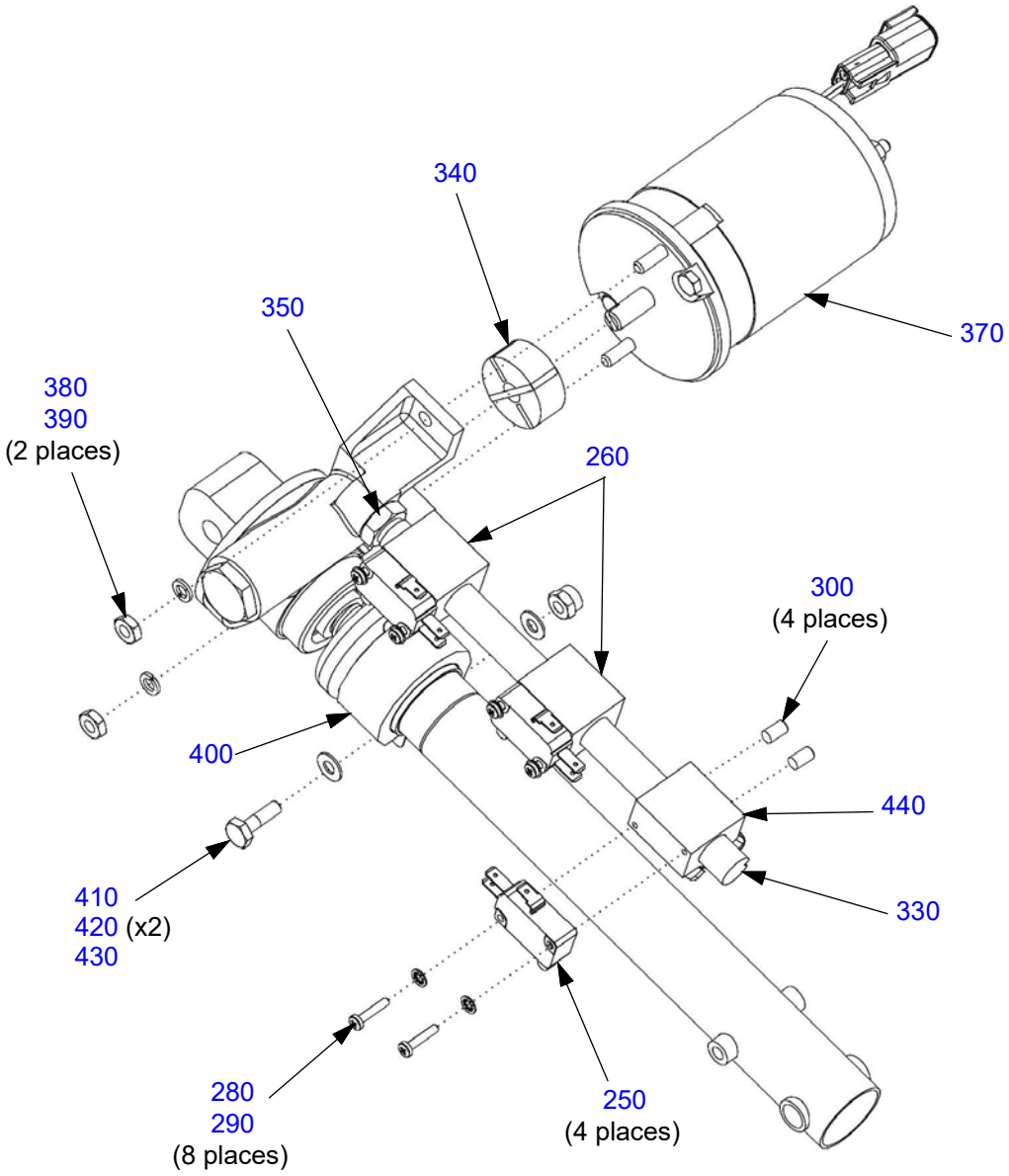

G2

(SN: K033 and on, and K003-K032 with SB-0034)

Table 27-50.1: Flap Actuator

Figure Item Number	Part Number	Part Name	Effectivity Code	Amount in Assy.
10	PK99003002	Actuator, Linear, Flaps	K003 and On	1
20	PK27504305	Bracket, Flap Actuator, Right	K003 and On	1
30	PK27504306	Bracket, Flap Actuator, Left	K003 and On	1
40	NAS6604-23D	Close Tolerance Bolt, 1/4-28 x 1.4375" Grip, Drilled Shank	K003 and On	1
50	NAS1149F0432P	Washer, Flat 1/4 x .032	K003 and On	6
60	AN310-4	Nut, Castellated, Steel 1/4-28	K003 and On	2
70	MS24665-132	Pin, Cotter, Cad Steel Ø .062 x .50	K003 and On	1
80	PK27504307	Bushing, Flap Actuator	K003 and On	1
90	NAS6604-27D	Close Tolerance Bolt, 1/4-28 x 1.6875" Grip, Drilled Shank	K003 and On	1
100	MS24665-134	Pin, Cotter, Cad Steel Ø .062 x .75	K003 and On	3
110	PK27504308	Bushing, Actuator Drive	K003 and On	1
120	AN3-22	Bolt, 10-32 x 2-9/32" Drilled Shank	K003 and On	1
130	NAS1149F0332P	Washer, Flat #10 x .032	K003 and On	4
140	AN320-3	Nut, Castellated, Shear, Steel 10-32	K003 and On	2
150	AN3-7	Bolt, 10-32 x 29/32" Drilled Shank	K003 and On	1
160	AK27504600	Pushrod Assy, Potentiometer, Flaps	K003 and On	1
170	MS24694-C60	Screw, Machine, C'sunk, CRES Ø .190 x 1-5/32	K003 and On	6
180	MS24694-C106	Screw, Machine, C'sunk, CRES Ø .250 x 1-7/32	K003 and On	6
190	NAS1149F0332P	Washer, Flat #10 x .032	K003 and On	6
200	NAS1149F0432P	Washer, Flat 1/4 x .032	K003 and On	6
210	MS21044N3	Nut, Self-locking, Steel 10-32	K003 and On	6
220	MS21044N4	Nut, Self-locking, Steel 1/4-28	K003 and On	6
230	AK27504301	Actuator Drive, Weldment	K003 and On	1

Figure Item Number	Part Number	Part Name	Effectivity Code	Amount in Assy.
240	PK27504308	Bushing, Actuator Drive	K003 and On	1
250	V71C17E9-201	Microswitch	K003-K032*	3
	V71C17E9-201	Microswitch	K033 and On**	4
260	B145-08 REV I	Switch Holder	K003 and On	2
270	B145-08-1 REV I	Switch Holder	K003 and On	1
280	MS35206-323	Pan Head Screw	K003 and On	6
290	MS35333-36	Lock Washer	K003 and On	6
300	MS51973-42	Setscrew, Hex Socket, Cone Point Ø .190-24 x .375	K003 and On	4
310	AK22100017	Assy., Flap Compensation Potentiometer	K003 - K010	1
320	AK22100217	Assy., Flap Compensation Potentiometer, GFC	K011 and On	1
330	B145-07	Switch Bar	K003 and On	1
340	B100-06	Universal Assy.	K003 and On	1
350	AN316-7R	Nut, Jam, Hexagon, Cad Steel 7/16-20	K003 and On	1
370	C145-452T	Motor Permanent Magnet 24.0 to 28.0 V.D.C. Filtered	K003 and On	1
380	MS35650-302	Nut, Plain, Hexagon, Machine Screw, UNF-2B, No. 10-32	K003 and On	2
390	MS35338-43	Washer, Lock-spring, Helical, Regular (Medium) Series	K003 and On	2
400	PK27504311	Limit Switch Ramp, Flap Actuator	K033 and On**	1
410	AN3-5A	Bolt, 10-32 x 21/32" Undrilled	K033 and On**	1
420	NAS1149F0332P	Washer, Flat #10 x .032	K033 and On**	2
430	MS21044N3	Nut, Self-locking, Steel 10-32	K033 and On**	1
440	PK27504315	Switch Block, Dual, Flaps	K033 and On**	1

*Without SB-0034
**Also SN K003-K032 with SB-0034

Figure 27-50.2: Flap Torque Tube

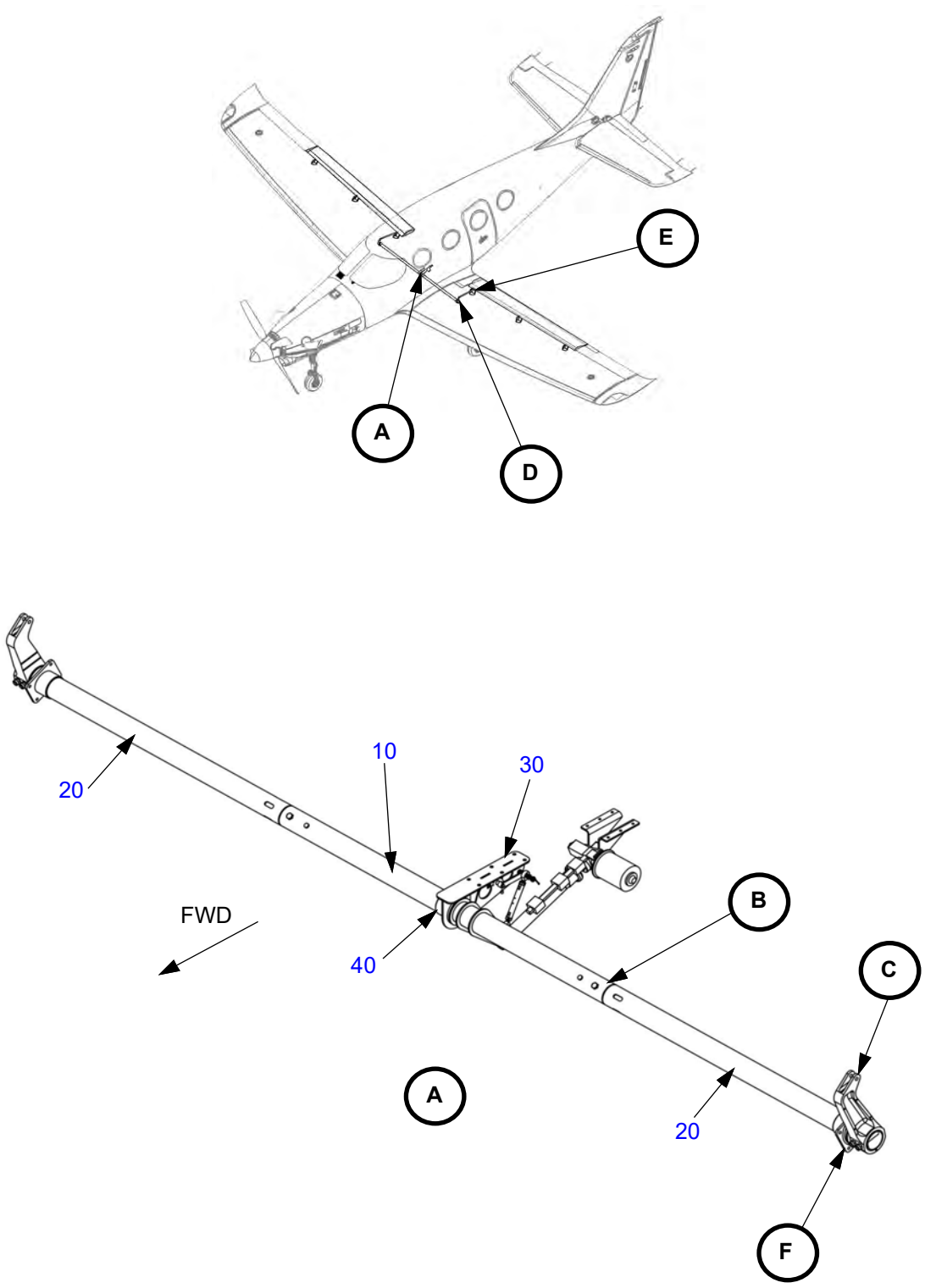

Figure 27-50.2: Flap Torque Tube (Continued)

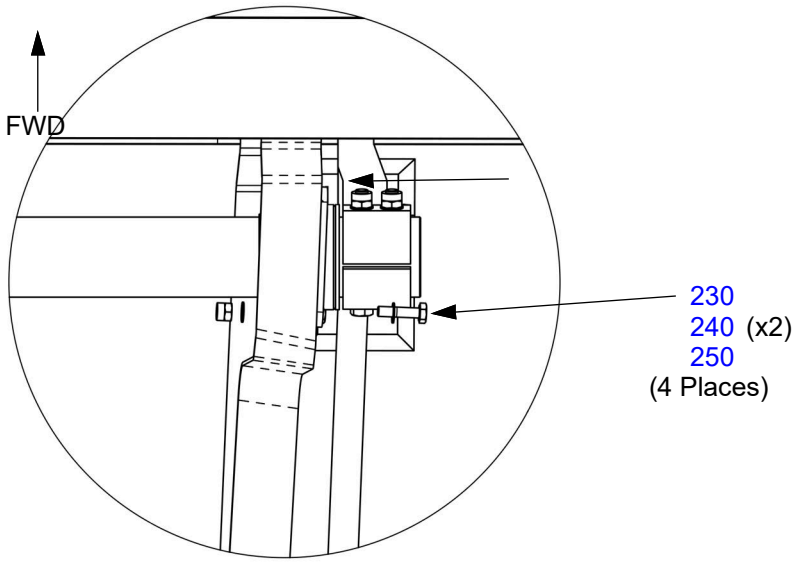

Left side shown, right side opposite.

View looking up.

F

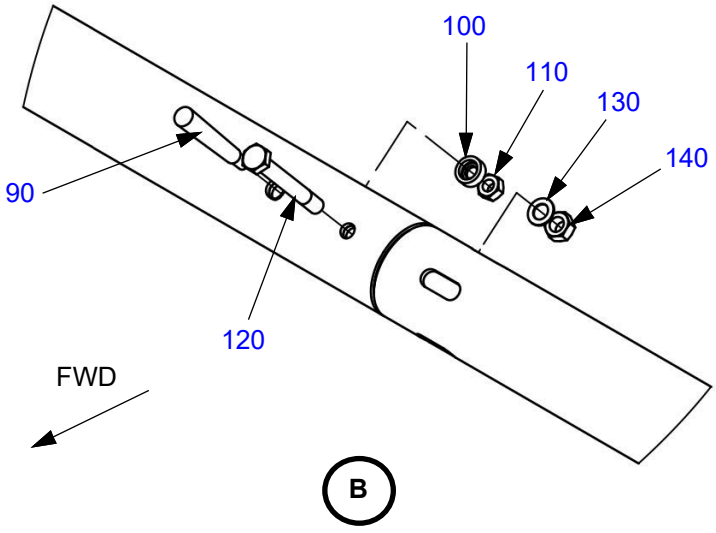

B

Left side shown, right side opposite.

Figure 27-50.2: Flap Torque Tube (Continued)

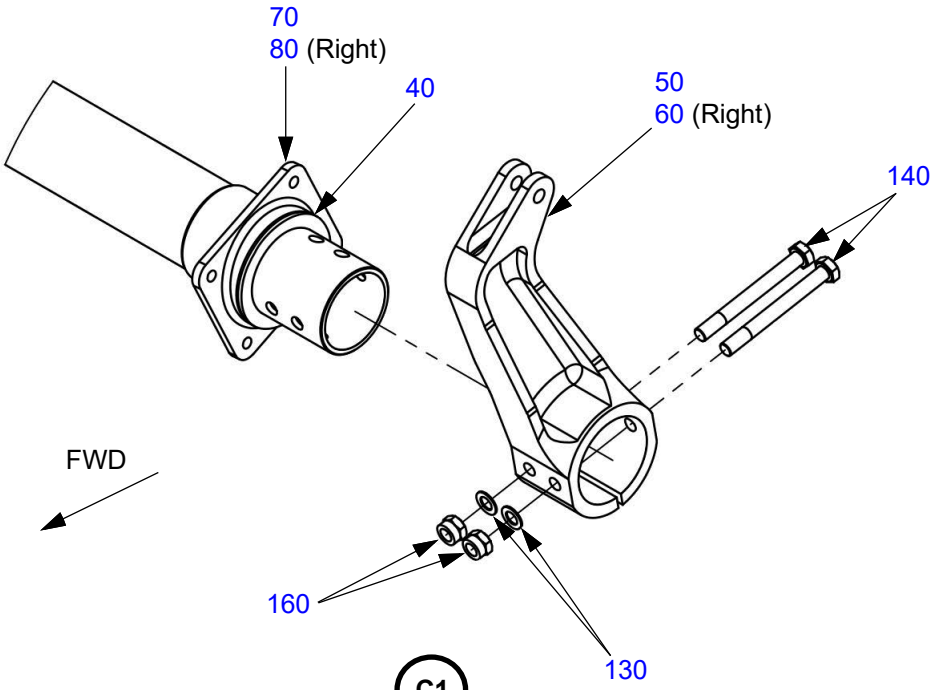

Left side shown, right side the same except where noted.

SN K003 - K0xx

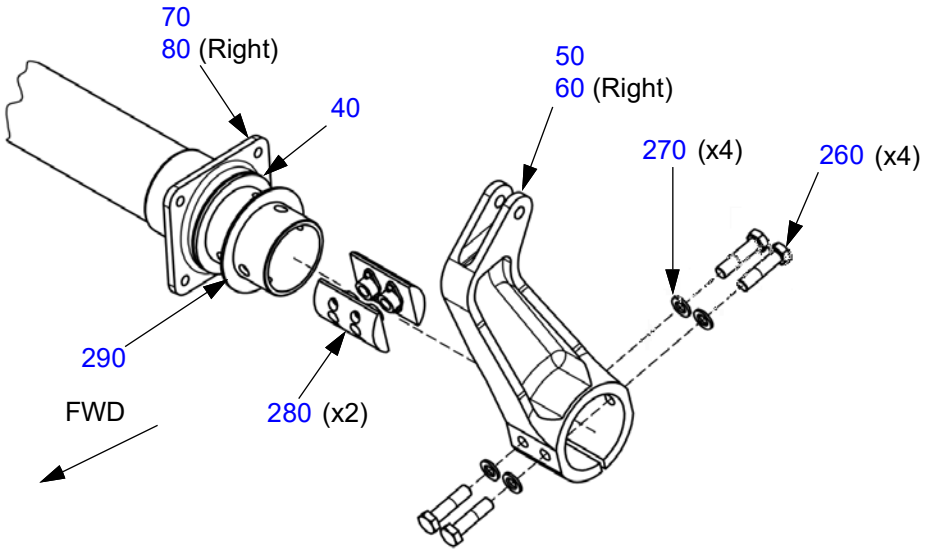

Left side shown, right side the same except where noted.

SN K0xx and On

Figure 27-50.2: Flap Torque Tube (Continued)

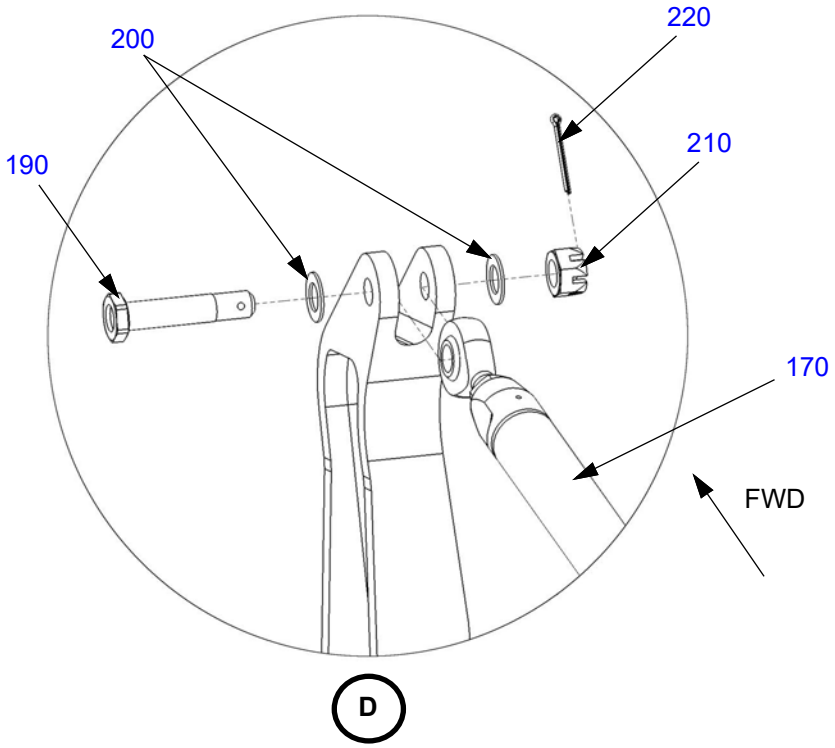

Left Side Shown, Right Side Opposite

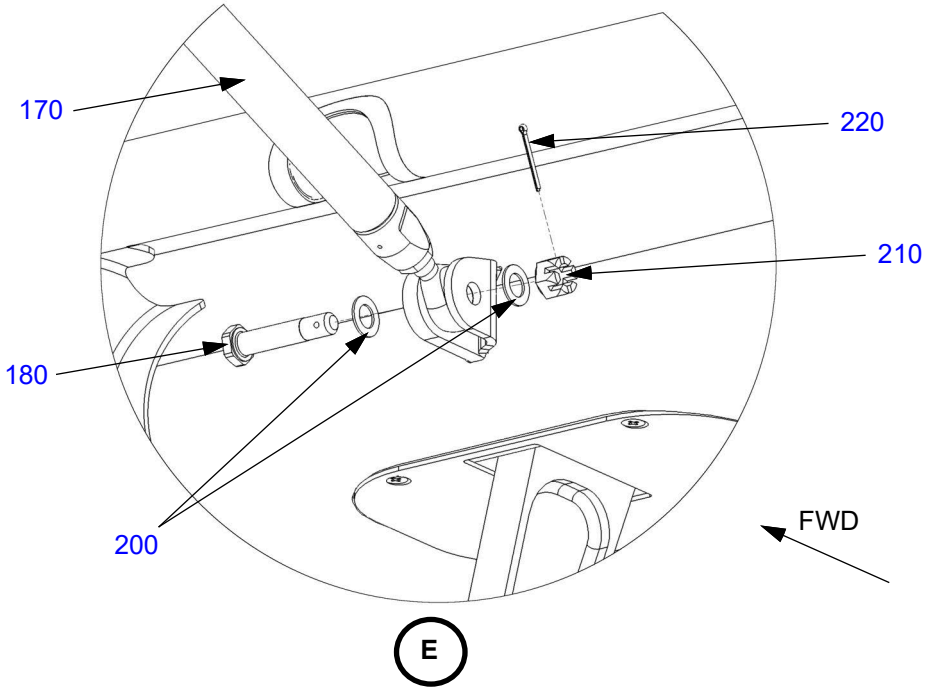

Left Side Shown, Right Side Opposite

Table 27-50.2: Flap Torque Tube

Figure Item Number	Part Number	Part Name	Effectivity Code	Amount in Assy.
10	AK27504100	End Fitting Assy, Flap	K003 and On	1
20	AK27504400	Flap Torque Tube Weldment, Outbd	K003 and On	2
30	AK27504200	Weldment, Bracket, Flaps Support	K003 and On	1
40	PK99001000	Flanged Bearing, Flaps	K003 and On	3
50	PK27504001	Flap Torque Tube Fork, Left	K003 and On	1
60	PK27504002	Flap Torque Tube Fork, Right	K003 and On	1
70	PK27504003	Flap Torque Tube Bearing Block, Left	K003 and On	1
80	PK27504004	Flap Torque Tube Bearing Block, Right	K003 and On	1
90	AN386-3-16A	Pin - Threaded Taper	K003 and On	2
100	AN975-4	Washer - Taper Pin	K003 and On	2
110	MS21083N4	Nut, Self-locking, Non-metallic Insert 1/4-28	K003 and On	2
120	AN5-23A	Bolt, 5/16-24 x 2-15/32" Undrilled	K003 and On	2
130	NAS1149F0532P	Washer, Flat 5/16 x .032	K003 and On	6
140	MS21083N5	Nut, Self-locking, Non-metalic Insert 5/16-24	K003 and On	2
150	AN5-27A	Bolt, 5/16-24 x 2-31/32" Undrilled	K003 - K0xx	4
160	MS21044N5	Nut, Self-locking, Steel 5/16-24	K003 - K0xx	4
170	AK27503000	Pushrod Assy, Flap Actuation	K003 and On	2
180	NAS6605-14D	Close Tolerance Bolt, 5/16-24 x 0.875"Grip, Drilled Shank	K003 and On	2
190	NAS6605-15D	Clogse Tolerance Bolt, 5/16-24 x 0.9375"Grip, Drilled Shank	K003 and On	2
200	NAS1149F0532P	Washer, Flat 5/16 x .032	K003 and On	8
210	AN310-5	Nut, Castellated, Steel 5/16-24	K003 and On	4
220	MS24665-134	Pin, Cotter, Cad Steel Ø .062 x .75	K003 and On	4
230	AN4-7A	Bolt, 1/4-28 x 29/32" Undrilled	K003 and On	8
240	NAS1149F0432P	Washer, Flat 1/4 x .032	K003 and On	16
250	MS21044N4	Nut, Self-locking, Steel 1/4-28	K003 and On	8

Figure Item Number	Part Number	Part Name	Effectivity Code	Amount in Assy.
260	AN5-11A	Bolt, 5/16-24 x 1-7/32" Undrilled	K0xx and On	8
270	NAS1149F0563P	Washer, Flat 5/16 x .063	K0xx and On	8
280	AK27504005	Assy, Crescent Washer, Torque Tube, Flap Actuator	K0xx and On	4
290	PK27504006	Thrust Spacer, Flap Actuator Tube Installation	K0xx and On	A/R

Figure 27-50.3: Flap Control (SN: K003-K010)

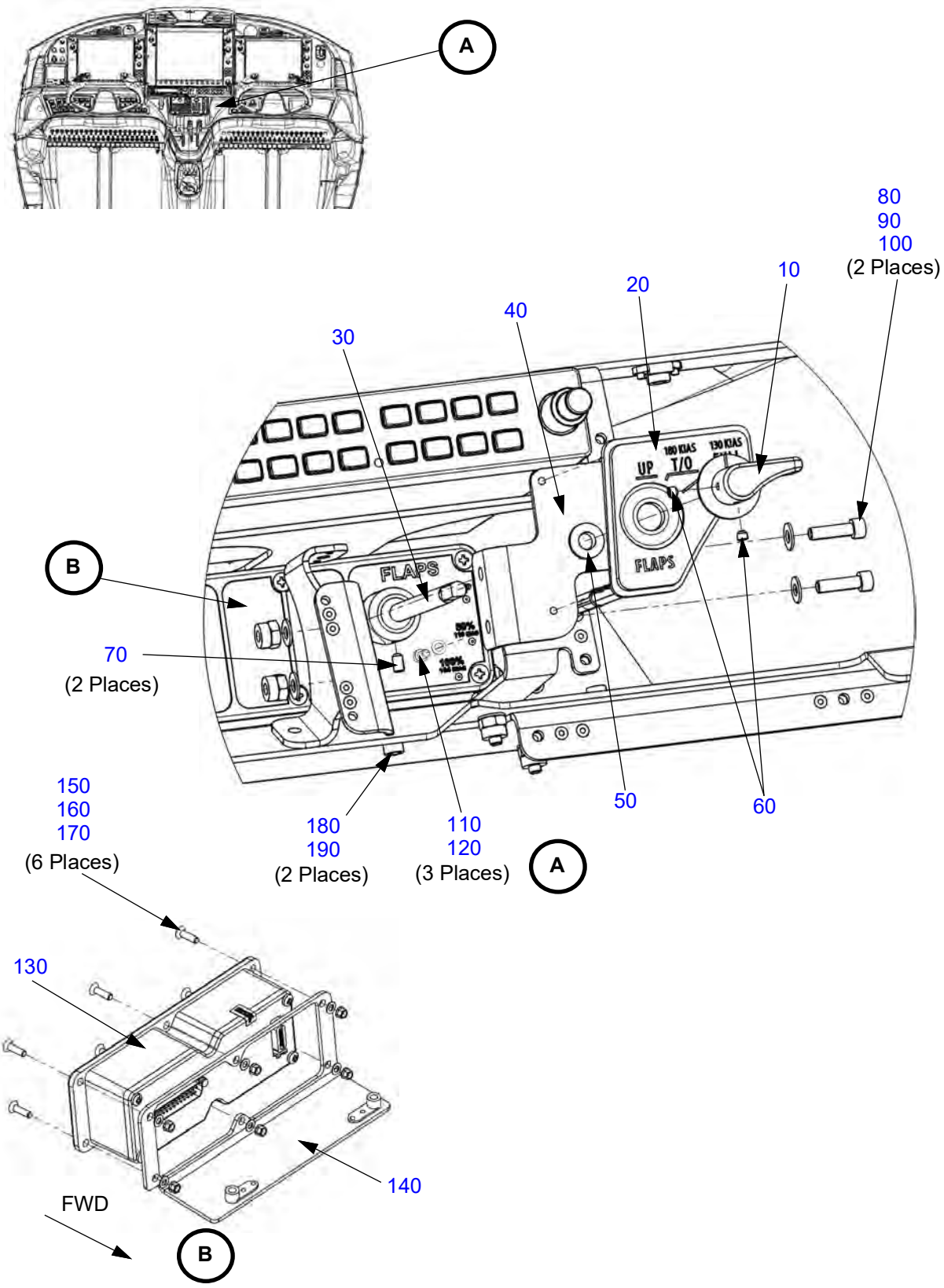

Table 27-50.3: Flap Control (SN: K003-K010)

Figure Item Number	Part Number	Part Name	Effectivity Code	Amount in Assy.
10	AK39000013	Assembly, Knob, Flap Control	K003 - K010	1
20	AK39109601	Assembly, Light Plate, Flaps	K003 - K010	1
30	PK39000021	Flap Switch Shaft, IP	K003 - K010	1
40	PK39000010	Flap Bracket	K003 - K010	1
50	NAS77A4-012	Bushing, Flanged .250 ID x .376 OD x 0.120 Grip	K003 - K010	1
60	MS51965-17	Setscrew, Hex Socket, Flat End Ø .138-32 x .125	K003 - K010	2
70	MS51965-19	Setscrew, Hex Socket, Flat End Ø .138-32 x .250	K003 - K010	2
80	NAS1352-08-10P	Screw, Socket Head .164-32 x .625	K003 - K010	2
90	NAS1149FN832P	Washer, Flat #8 x .032	K003 - K010	4
100	MS21044N08	Nut, Self-locking, Steel .164-32	K003 - K010	2
110	NAS1352-04-3P	Screw, Socket Head .112-40 x .188	K003 - K010	3
120	NAS1149FN416P	Washer, Flat #4 x .016	K003 - K010	3
130	PK99008157	Integrated Flap Switch	K003 - K010	1
140	PK39000020	Flap Switch Box Bracket, IP	K003 - K010	1
150	MS24693-28B	Screw, Machine, C'sunk, Blk Oxide Ø .138 x 0.500	K003 - K010	6
160	NAS620C6	Washer, Reduced OD, CRES, .143 ID x .267 OD	K003 - K010	6
170	MS21042L06	Nut, Self-locking, 450°, Reduced #6-32	K003 - K010	6
180	NAS1352-08-9P	Screw, Socket Head .164-32 x .563	K003 - K010	2
190	NAS1149FN832P	Washer, Flat #8 x .032	K003 - K010	2

Figure 27-50.4: Flap Control (SN: K011 and On)

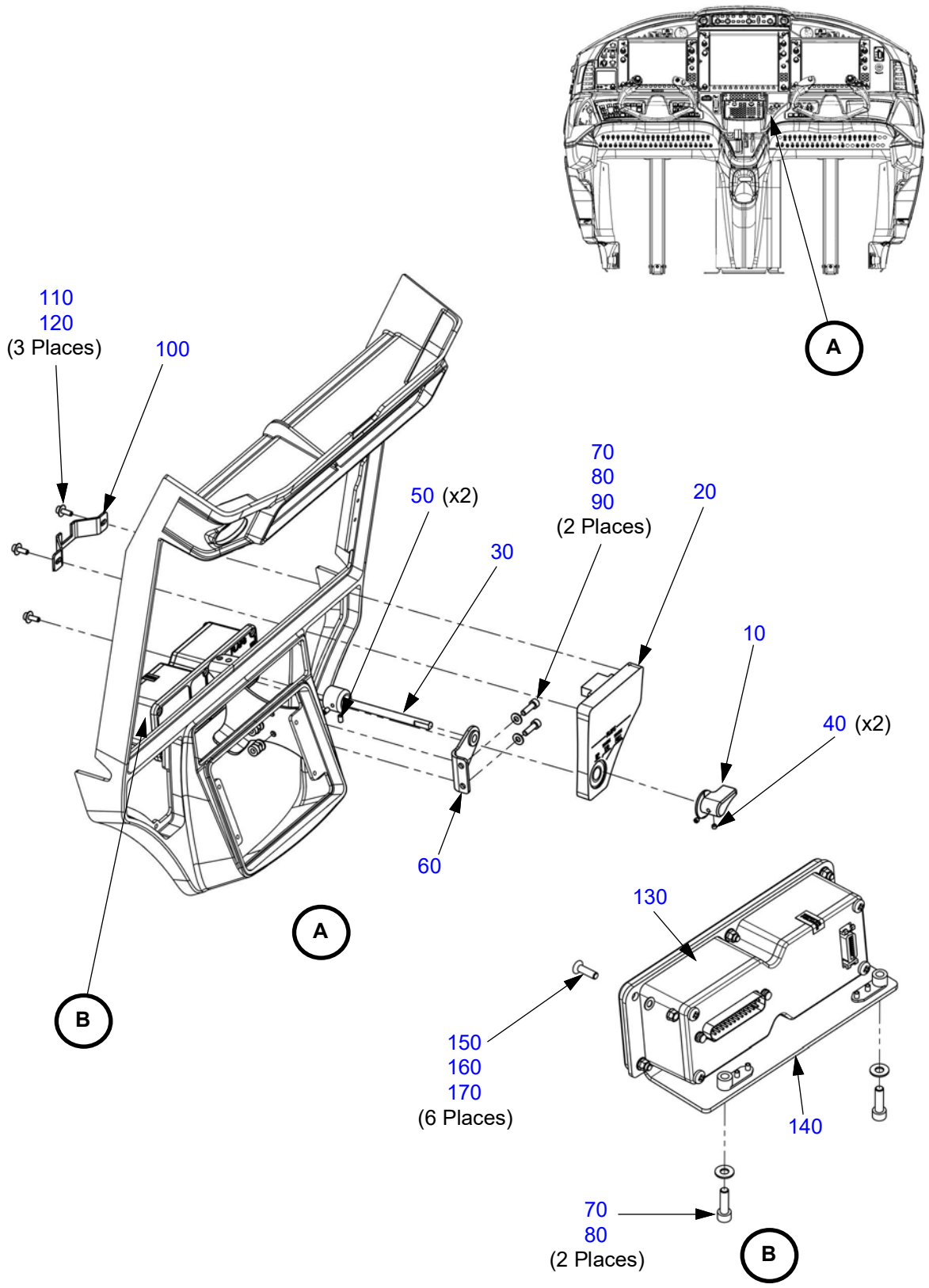

Table 27-50.4: Flap Control (SN: K011 and On)

Figure Item Number	Part Number	Part Name	Effectivity Code	Amount in Assy.
10	AK39000013	Assembly, Knob, Flap Control	K011 and On*	1
20	PK99008402	Light Plate, Flaps, GFC	K011 and On*	1
30	PK39000021	Flap Switch Shaft, IP	K011 and On*	1
40	MS51965-17	Setscrew, Hex Socket, Flat End Ø .138-32 x .125	K011 and On*	2
50	MS51965-19	Setscrew, Hex Socket, Flat End Ø .138-32 x .250	K011 and On*	2
60	AK39000022	Assy, Bracket, Shaft Support, Flap Switch	K011 and On*	1
70	NAS1352-08-9P	Screw, Socket Head .164-32 x .563	K011 and On*	4
80	NAS1149FN832P	Washer, Flat #8 x .032	K011 and On*	4
90	MS21044N08	Nut, Self-locking, Steel .164-32	K011 and On*	2
100	PK39000023	Connector Retainer, Flaps And Gear Light Plate	K011 and On*	1
110	NAS1352-06-6P	Screw, Socket Head .138-32 x .375	K011 and On*	3
120	NAS1149FN616P	Washer, Flat #6 x .016	K011 and On*	3
130	PK99008157	Integrated Flap Switch	K011 and On*	1
140	PK39000020	Flap Switch Box Bracket, IP	K011 and On*	1
150	MS24693-28B	Screw, Machine, C'sunk, Blk Oxide Ø .138 x 0.500	K011 and On*	6
160	NAS620C6	Washer, Reduced O.D., CRES, .143 I.D x .267 O.D.	K011 and On*	6
170	MS21042L06	Nut, Self-Locking, 450°, Reduced #6-32	K011 and On*	6

*Also SN:K003-K010 with SB-0017

This Page Intentionally Left Blank

CHAPTER 28

Fuel

This Page Intentionally Left Blank

Table of Contents
and
List of Effective Pages

Chapter/Section	Page Number	Effective Date
28-Title	Page 1	03 Apr 2020
28-Title	Page 2	03 Apr 2020
28-LOEP	Page 1	14 Jul 2021
28-LOEP	Page 2	14 Jul 2021
28-TOC	Page 1	03 Apr 2020
28-TOC	Page 2	03 Apr 2020
	Storage	
28-10	Page 1	03 Apr 2020
28-10	Page 2	03 Apr 2020
28-10	Page 3	03 Apr 2020
28-10	Page 4	03 Apr 2020
28-10	Page 5	03 Apr 2020
28-10	Page 6	03 Apr 2020
28-10	Page 7	03 Apr 2020
28-10	Page 8	14 Jul 2021
28-10	Page 9	03 Apr 2020
28-10	Page 10	03 Apr 2020
	Distribution	
28-20	Page 1	03 Apr 2020
28-20	Page 2	03 Apr 2020
28-20	Page 3	03 Apr 2020
28-20	Page 4	03 Apr 2020
28-20	Page 5	03 Apr 2020
28-20	Page 6	03 Apr 2020
28-20	Page 7	03 Apr 2020
28-20	Page 8	03 Apr 2020
28-20	Page 9	03 Apr 2020
28-20	Page 10	03 Apr 2020
28-20	Page 11	03 Apr 2020
28-20	Page 12	03 Apr 2020
28-20	Page 13	03 Apr 2020
28-20	Page 14	03 Apr 2020
28-20	Page 15	03 Apr 2020
28-20	Page 16	03 Apr 2020
28-20	Page 17	03 Apr 2020

28-20 ..... Page 18 ..... 03 Apr 2020
28-20 ..... Page 19 ..... 03 Apr 2020
28-20 ..... Page 20 ..... 03 Apr 2020
28-20 ..... Page 21 ..... 03 Apr 2020
28-20 ..... Page 22 ..... 03 Apr 2020
28-20 ..... Page 23 ..... 03 Apr 2020
28-20 ..... Page 24 ..... 03 Apr 2020
28-20 ..... Page 25 ..... 03 Apr 2020
28-20 ..... Page 26 ..... 14 Jul 2021
28-20 ..... Page 27 ..... 14 Jul 2021
28-20 ..... Page 28 ..... 14 Jul 2021

Indicating
28-40 ..... Page 1 ..... 14 Jul 2021
28-40 ..... Page 2 ..... 14 Jul 2021
28-40 ..... Page 3 ..... 03 Apr 2020
28-40 ..... Page 4 ..... 03 Apr 2020

CHAPTER 28

Table of Contents

List of Effective Pages ..... 28-LOEP / Page 1
Table of Contents ..... 28-TOC / Page1

Paragraph **Page Number**

Storage

Figure 28-10.1: Fuel Sump Drains ..... 28-10 / Page 1
Table 28-10.1: Fuel Sump Drains ..... 28-10 / Page 2
Figure 28-10.2: Fuel Filler Caps ..... 28-10 / Page 3
Table 28-10.2: Fuel Filler Caps ..... 28-10 / Page 4
Figure 28-10.3: Fuel Tank Vents ..... 28-10 / Page 5
Table 28-10.3: Fuel Tank Vents ..... 28-10 / Page 8
Figure 28-10.4: Fuel Collector Bay Check Valves ..... 28-10 / Page 9
Table 28-10.4: Fuel Collector Bay Check Valves ..... 28-10 / Page 10

Distribution

Figure 28-20.1: Electric Fuel Pumps ..... 28-20 / Page 1
Table 28-20.1: Electric Fuel Pumps ..... 28-20 / Page 4
Figure 28-20.2: Fuel Lines, Firewall Aft ..... 28-20 / Page 6
Table 28-20.2: Fuel Lines, Firewall Aft ..... 28-20 / Page 10
Figure 28-20.3: Fuel Selector ..... 28-20 / Page 12
Table 28-20.3: Fuel Selector ..... 28-20 / Page 16
Figure 28-20.4: Fuel Lines, Firewall Forward ..... 28-20 / Page 19
Table 28-20.4: Fuel Lines, Firewall Forward ..... 28-20 / Page 23
Figure 28-20.5: Fuel Auto Select Controller ..... 28-20 / Page 26
Table 28-20.5: Fuel Auto Select Controller ..... 28-20 / Page 27

Indicating

Figure 28-40.1: Fuel Probes ..... 28-40 / Page 1
Table 28-40.1: Fuel Probes ..... 28-40 / Page 2
Figure 28-40.2: Fuel Pressure and Fuel Flow Transducers ..... 28-40 / Page 3
Table 28-40.2: Fuel Pressure and Fuel Flow Transducers ..... 28-40 / Page 4

This Page Intentionally Left Blank

STORAGE

Figure 28-10.1: Fuel Sump Drains

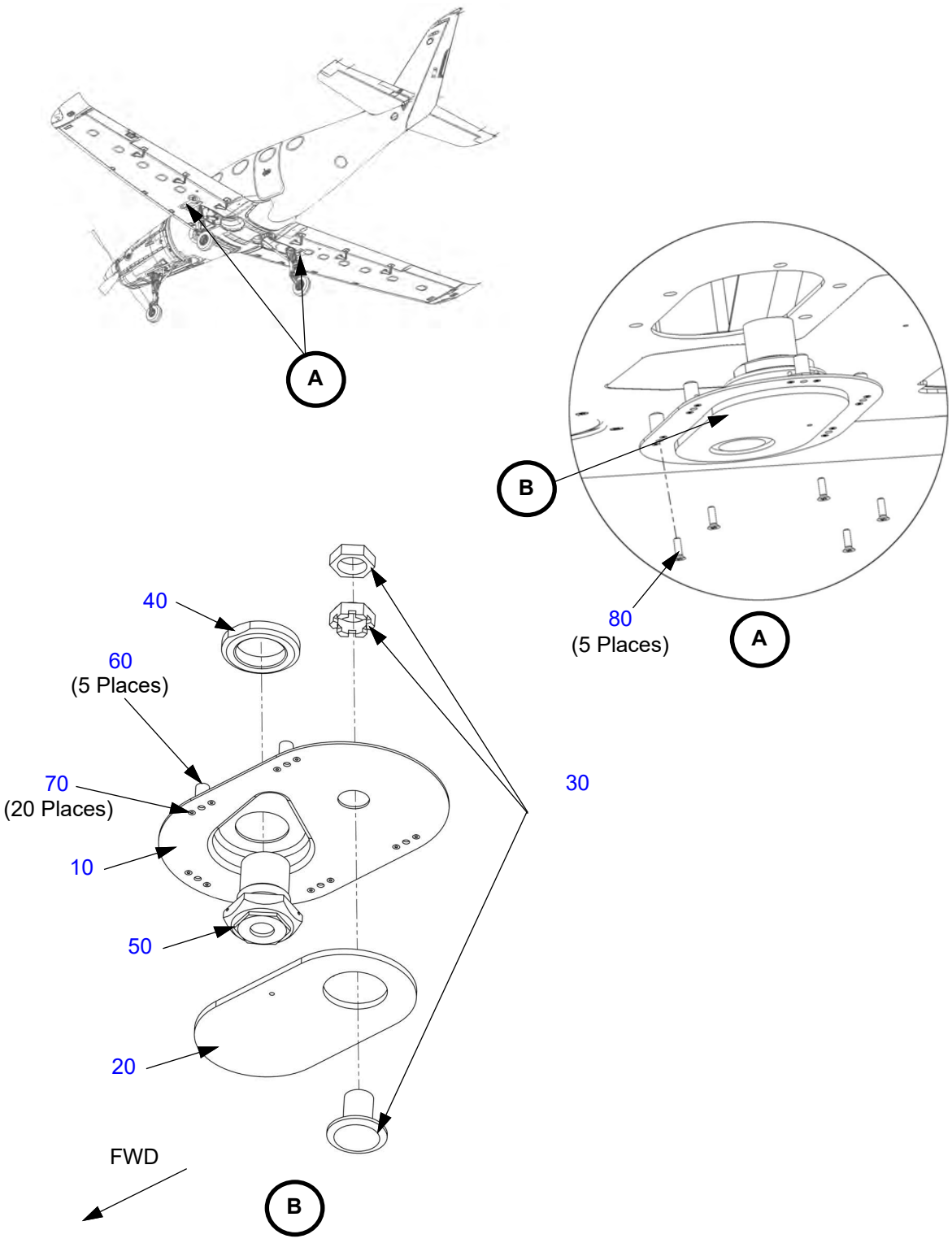

Table 28-10.1: Fuel Sump Drains

Figure Item Number	Part Number	Part Name	Effectivity Code	Amount in Assy.
10	PK57106001	Access Panel, Fuel Drain, Wing Assy	K003 and On	2
20	PK57106018	Cover, Access Panel, Fuel Drains	K003 and On	2
30	79C20AC	Auto-valve Drain Valve Assembly	K003 and On	2
40	PK28100001	Bulkhead Nut, Fuel Drain	K003 and On	2
50	967C-12	Fuel Quick Drain Plug	K003 and On	2
60	NAS1473A08	Nut, Self Locking, Plate-two Lug Cap, Floating, #8-32	K003 and On	10
70	CCR264CS-3-03	Cherry Pull-thru Rivet, C'sunk, CRES Ø 3/32 x .255	K003 and On	20
80	MS24694-S5	Screw, Machine, C'sunk Ø .164 x 17/32	K003 and On	10

Figure 28-10.2: Fuel Filler Caps

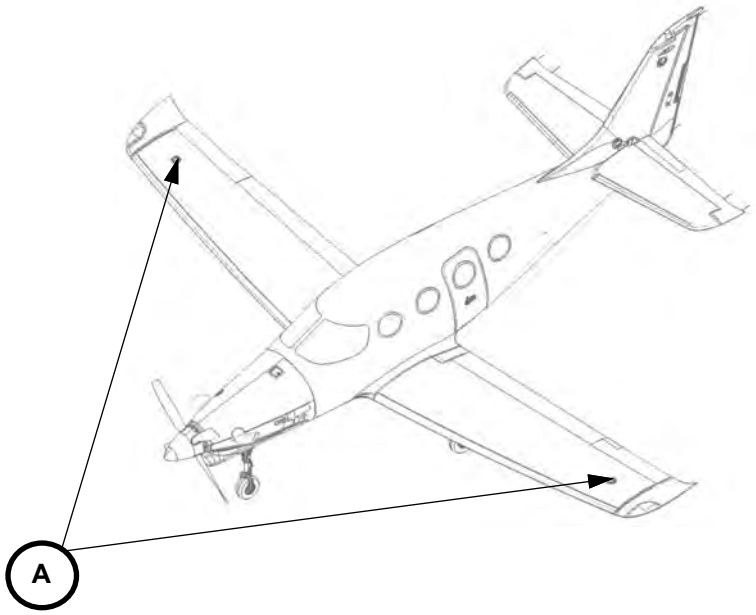

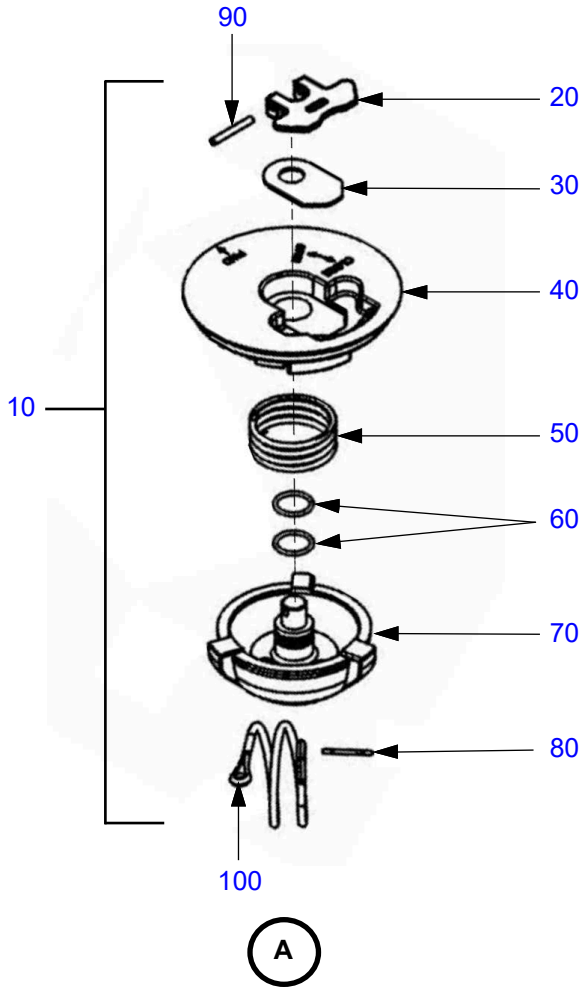

Table 28-10.2: Fuel Filler Caps

Figure Item Number	Part Number	Part Name	Effectivity Code	Amount in Assy.
10	GCAFL00004-48	Cap, Gravity Fuel (Assembly)	K003 and On	2
20	P0000194-1	Handle, Operating	K003 and On	1
30	P0000195-1	Plate, Wear	K003 and On	1
40	P0000192-1	Gravity Cap, Painted with Seal	K003 and On	1
50	P0000217	Spring	K003 and On	1
60	M25988/1-015	Seal, O-Ring	K003 and On	2
70	P0000205-1	Locking Member, Finished	K003 and On	1
80	MS24665-298	Pin, Cotter	K003 and On	1
90	MS9390-220	.125 DIA x 1.0L CRES Dowel	K003 and On	1
100	MS27380-3	Lanyard	K003 and On	1

Figure 28-10.3: Fuel Tank Vents

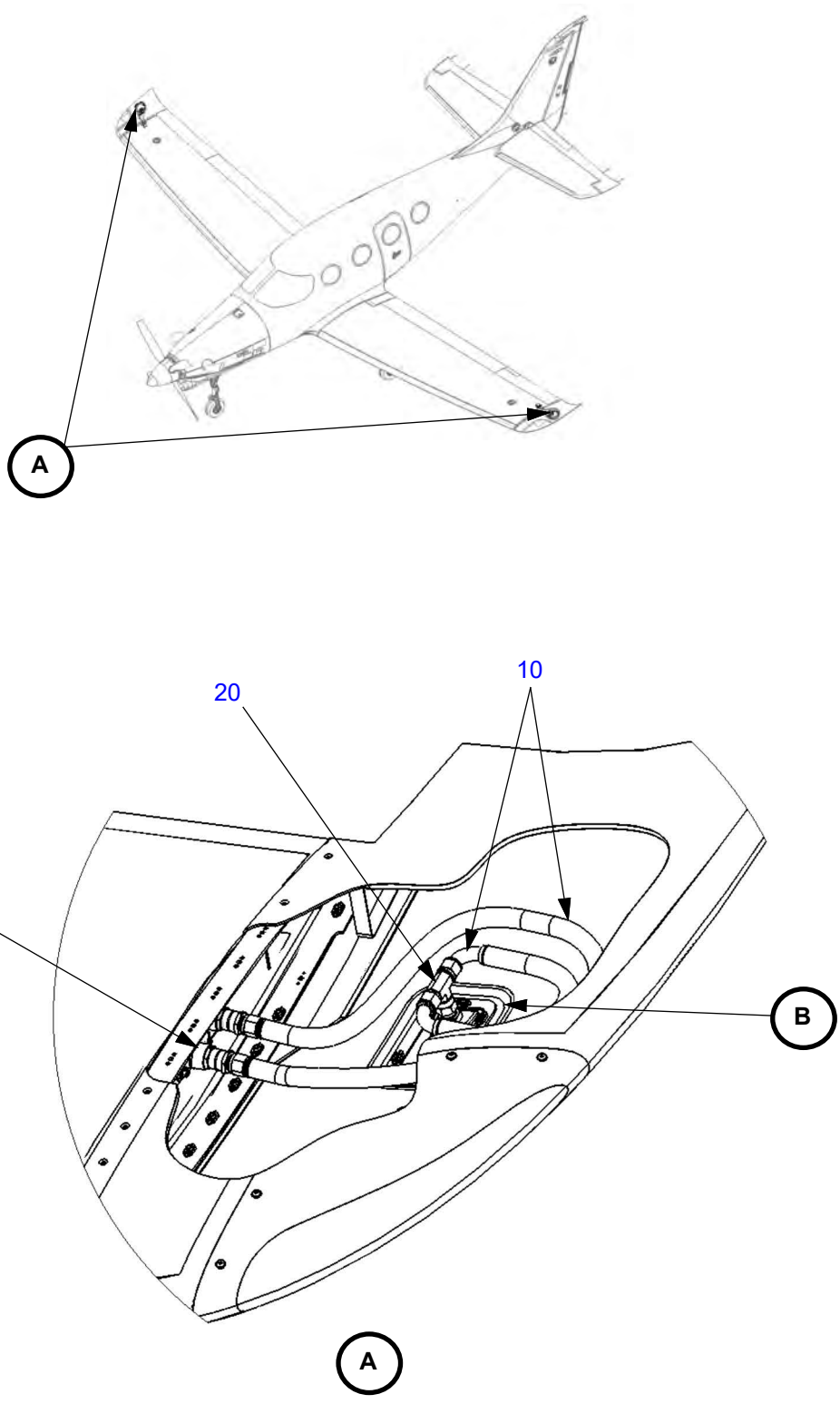

Left side shown, right side the same.

Figure 28-10.3: Fuel Tank Vents (Continued)

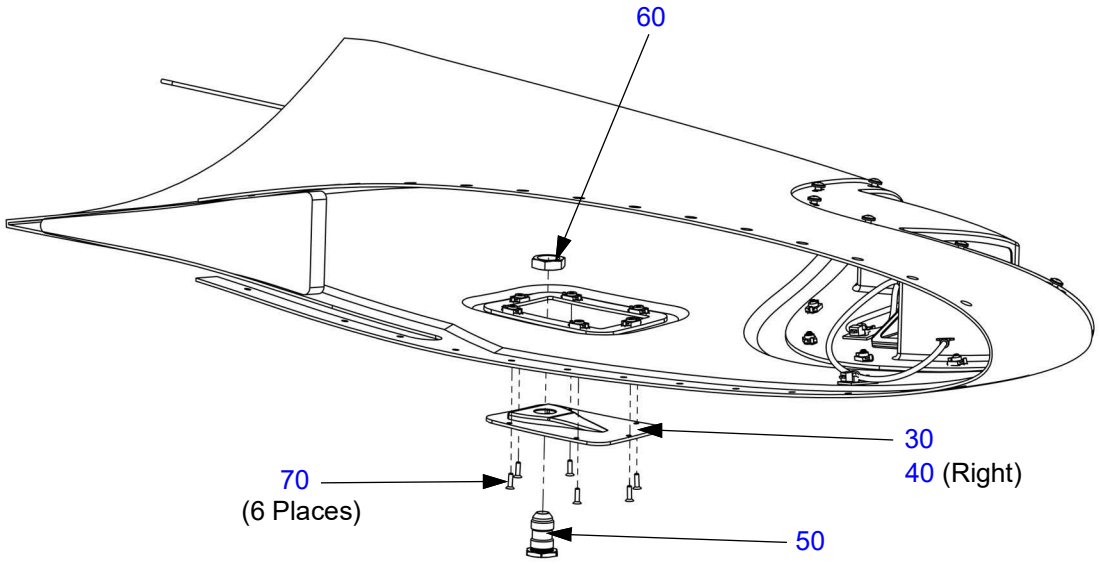

B

Left side shown, right side the same except where noted.

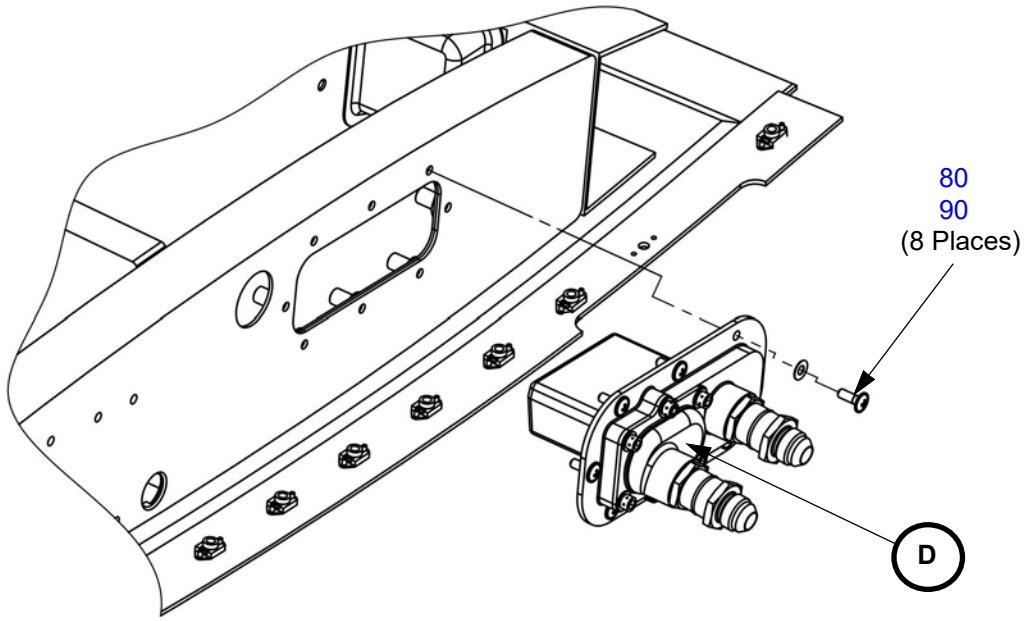

C

Left side shown, right side the same.

Figure 28-10.3: Fuel Tank Vents (Continued)

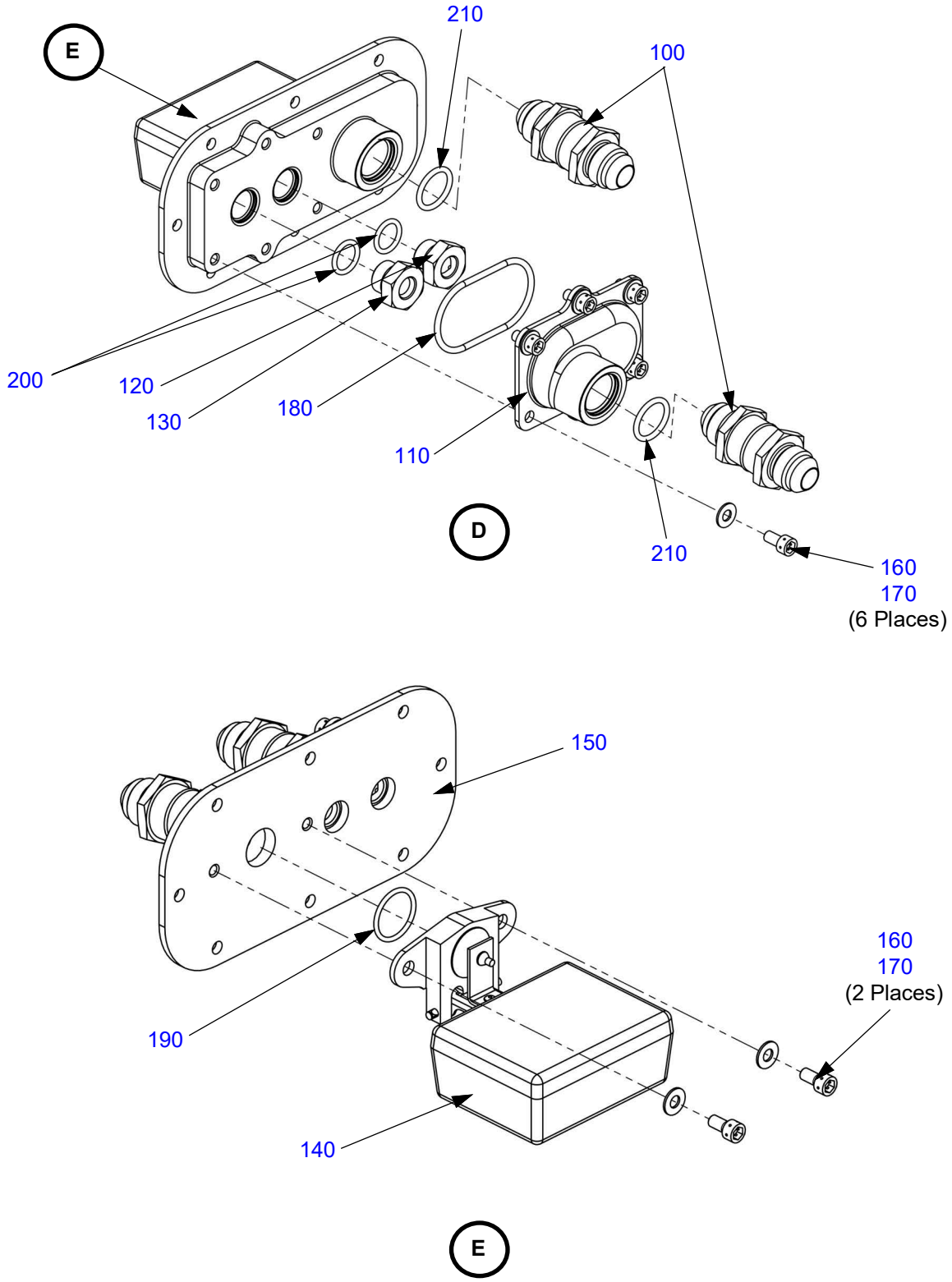

Table 28-10.3: Fuel Tank Vents

Figure Item Number	Part Number	Part Name	Effectivity Code	Amount in Assy.
10	AE1011343 H 0302	Eaton: Hose Assy, -8 x 30.3", Nomex Reinforced	K003 and On	4
20	8 S6X-SS	37° Flare, Branch Tee	K003 and On	2
30	PK57301103	NACA Duct, Fuel Vent, Left	K003 and On	1
40	PK57302203	NACA Duct, Fuel Vent, Right	K003 and On	1
50	PK28102003	Fuel Vent, Bulkhead Fitting	K003 and On	2
60	AS5178W08	Nut, Fitting, Aluminum, Ø.500 Tube x .750-16 Thread	K003 and On	2
70	MS24693-C28	Screw, Machine, C'sunk, CRES Ø .138 x 0.500	K003 and On	12
80	AN525-10R12	Screw, Washer Head, .190 x .750 Lg.	K003 and On	16
90	NAS1149F0316P	Washer, Flat #10 x .016	K003 and On	16
100	PK99007024	Flame Arrestor	K003 and On	4
110	PK28102002	Cover, Fuel Vent	K003 and On	2
120	PK99007028	Relief Valve, Fuel Vent	K003 and On	2
130	PK99007029	Vacuum Breaker, Fuel Vent	K003 and On	2
140	PK99007030	Float Valve, Fuel Vent	K003 and On	2
150	PK28102001	Manifold, Fuel Vent, Slosh Box Access	K003 and On	2
160	NAS1351C3H6P	Screw, Socket Head, Drilled, CRES, Ø .190-32 x .375	K003 and On	16
170	NAS1149C0332R	Washer, Flat, CRES #10 x .032	K003 and On	16
180	M83461/1-133	O-ring, 1.799 ID x 1.103 Width	K003 and On	2
190	M83461/1-018	O-ring, .739 ID x .070 Width	K003 and On	2
200	M83461/2-906	O-ring, SAE Straight Thread Port, -06	K003 and On	4
210	M83461/2-908	O-ring, SAE Straight Thread Port, -08	K003 and On	4

Figure 28-10.4: Fuel Collector Bay Check Valves

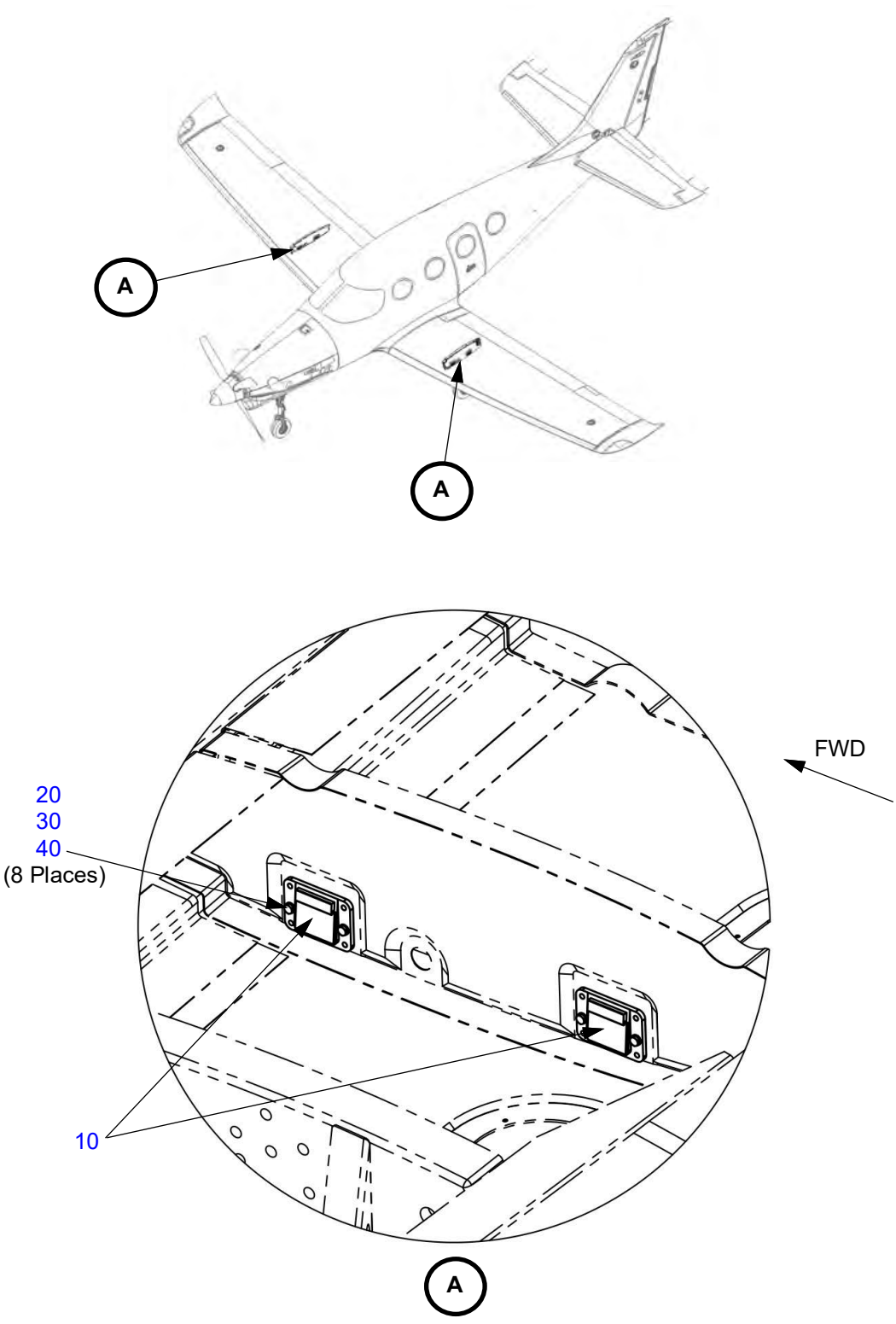

Right side shown, left side the same.

Table 28-10.4: Fuel Collector Bay Check Valves

Figure Item Number	Part Number	Part Name	Effectivity Code	Amount in Assy.
10	35B3-2	Autovalve: Fuel Flapper Check Valve	K003 and On	4
20	AN3-5A	Bolt, 10-32 x 21/32" Undrilled	K003 and On	8
30	NAS1149F0332P	Washer, Flat #10 x .032	K003 and On	16
40	MS21042L3	Nut, Self-locking, 450°, Reduced #10-32	K003 and On	8

DISTRIBUTION

Figure 28-20.1: Electric Fuel Pumps

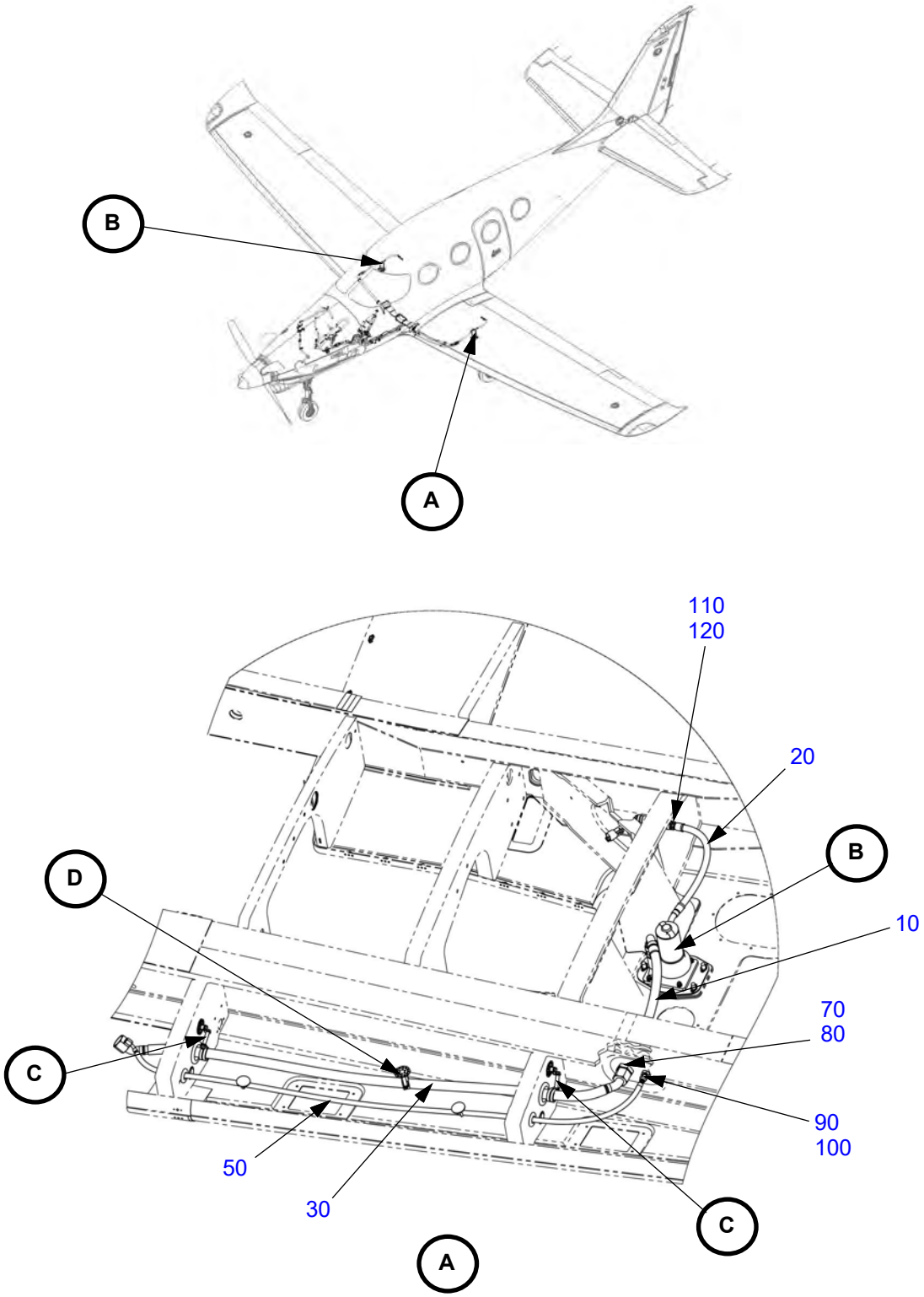

Figure 28-20.1: Electric Fuel Pumps (Continued)

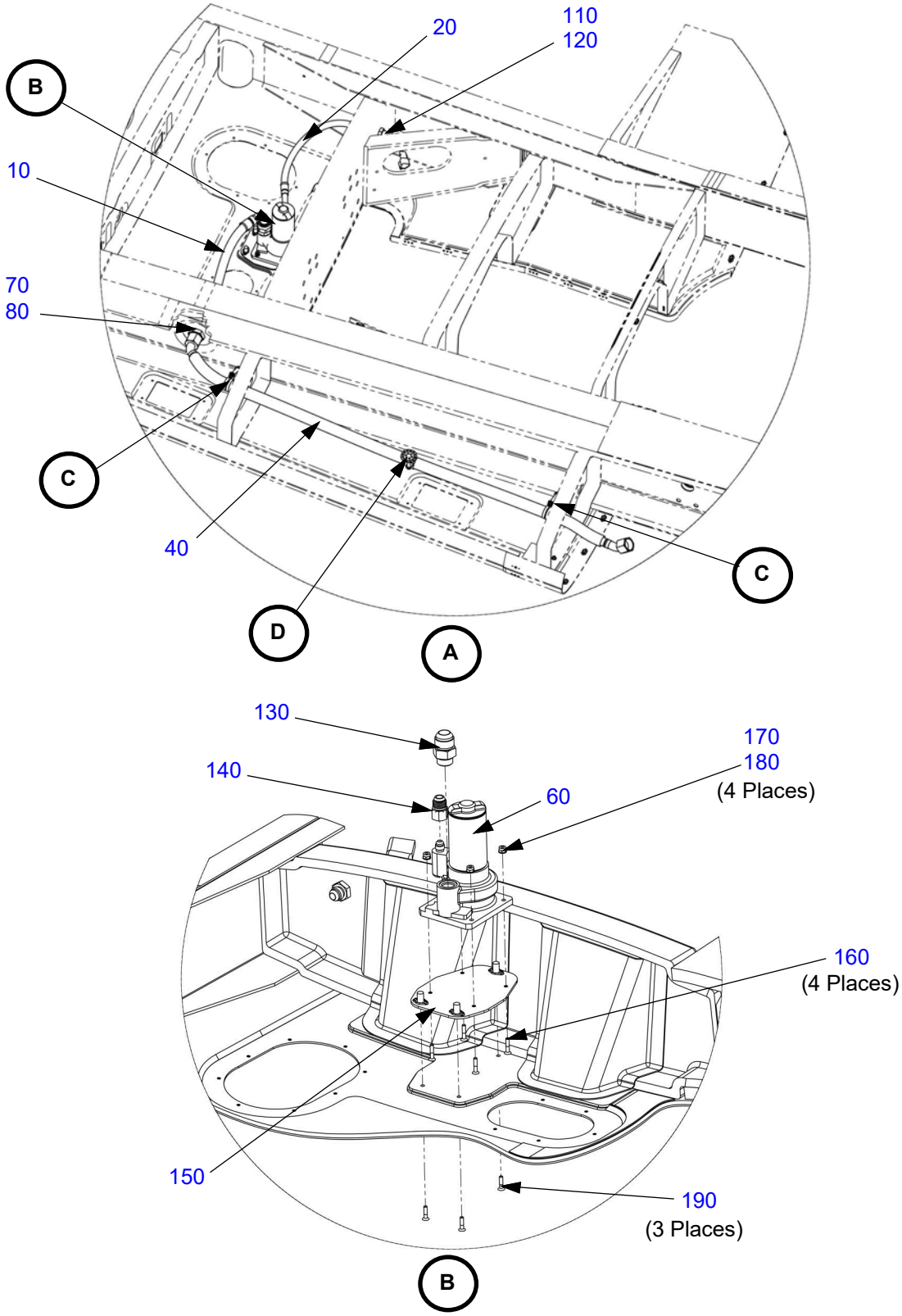

Right side shown, left side the same.

Figure 28-20.1: Electric Fuel Pumps (Continued)

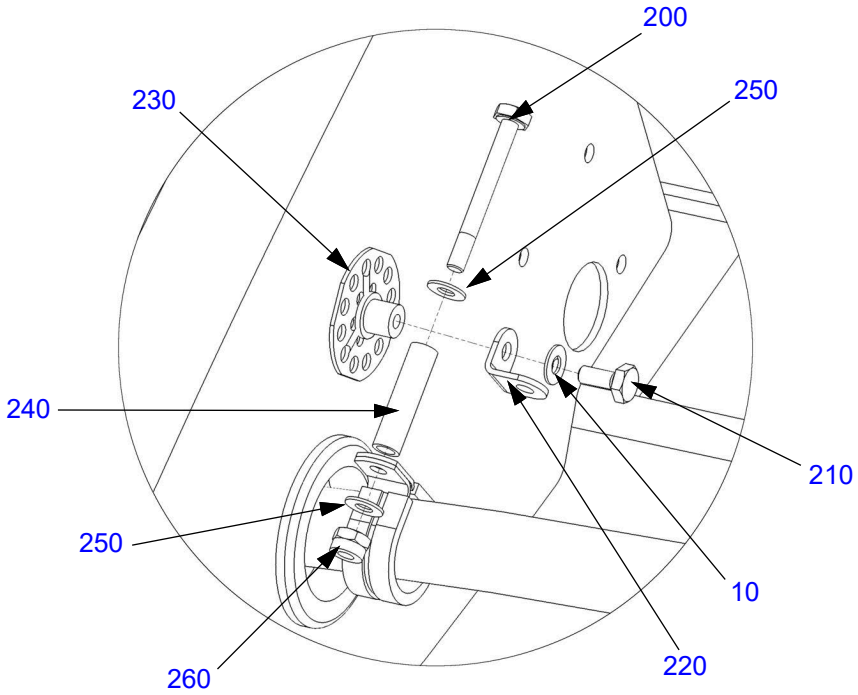

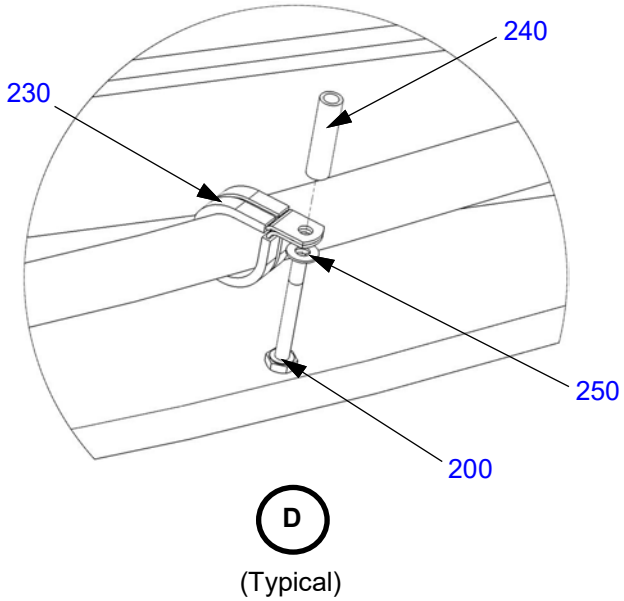

Table 28-20.1: Electric Fuel Pumps

Figure Item Number	Part Number	Part Name	Effectivity Code	Amount in Assy.
10	AE1011343 K 0144	Eaton: Hose Assy, Aeroquip, -12 x 14.5", Nomex Reinforced	K003 and On	2
20	AE1011343 H 0150	Eaton: Hose Assy, Aeroquip, -8 x 15.0", Nomex Reinforced	K003 and On	2
30	AE6202 K 0484-090 124K007G0484C 090	Eaton/parker: Hose Assy, -12 x 48.5", 45 Deg Fittings, Integral Chafe Sleeve	K003 and On	1
40	AE6202 K 0484-270 124K007G0484C 270	Eaton/parker: Hose Assy, -12 x 48.5", 45 Deg Fittings, Integral Chafe Sleeve	K003 and On	1
50	AE3663232 E 0534 124K003-4CR-0534	Eaton/parker: Hose Assy, -4 x 53.5", Straight To 45 Deg, Integral Chafe Sleeve	K003 and On	1
60	1C12-43	DC Fuel Boost Pump	K003 and On	2
70	AS5406J12	Fitting, Union, Tube, .375 Bulkhead, 3/4" OD Tube	K003 and On	2
80	AS5178J12	Nut, Fitting, CRES, Ø.750 Tube x 1.063-12 Thread	K003 and On	2
90	AS5406J04	Fitting, Union, Tube, .375 Bulkhead, 1/4" OD Tube	K003 and On	1
100	AS5178J04	Nut, Fitting, CRES, Ø.250 Tube x .438-20 Thread	K003 and On	1
110	PK29000008	Fitting, Union, Tube, 1.25 Bulkhead, 1/2" OD Tube	K003 and On	2
120	AS5178J08	Nut, Fitting, CRES, Ø.500 Tube x .750-16 Thread	K003 and On	2
130	12-10 F5OX-SS	Parker: Fitting, Straight, SAE-ORB To JIC (See item 290 for replacement o-ring.)	K003 and On	2
140	FG2406-06-08	Brennan: Fitting, Reducer, 1/2 To 3/8	K003 and On	2

Figure Item Number	Part Number	Part Name	Effectivity Code	Amount in Assy.
150	AK28204008	Assembly, Mounting Pad, Fuel Pump	K003 and On	2
160	MS24694-S56	Screw, Machine, C'sunk Ø .190 x 29/32	K003 and On	10
170	NAS1149F0332P	Washer, Flat #10 x .032	K003 and On	8
180	MS21045L3	Nut, Self-locking, Steel 10-32	K003 and On	8
190	MS24694-S54	Screw, Machine, C'sunk Ø .190 x 25/32	K003 and On	6
200	AN3-16A	Bolt, 10-32 X 1-25/32" Undrilled	K003 and On	4
210	AN3-3A	Bolt, 10-32 X 15/32" Undrilled	K003 and On	4
220	AN743-12	Bracket, Support Clamp, Al, .204	K003 and On	4
230	AS21919WDG14	Clamp, Loop Type, Cushioned, Ø .875	K003 and On	6
240	NAS43DD3-79N	Spacer, Aluminum .214 Id X .312 OD x 1.234	K003 and On	6
250	NAS1149F0332P	Washer, Flat #10 X .032	K003 and On	10
260	MS21045L3	Nut, Self-locking, Steel 10-32	K003 and On	4
270	AN3-15A	Bolt, 10-32 X 1-21/32" Undrilled	K003 and On	2
*280	AS33671-2	Strap, Tie Down, Adjustable	K003 and On	A/R
*290	MS28778-10	O-Ring	K003 and On	2

* Item not illustrated.

Figure 28-20.2: Fuel Lines, Firewall Aft

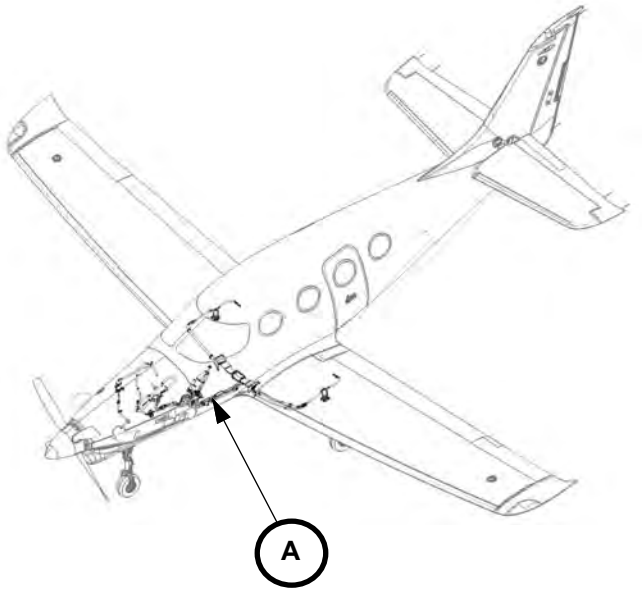

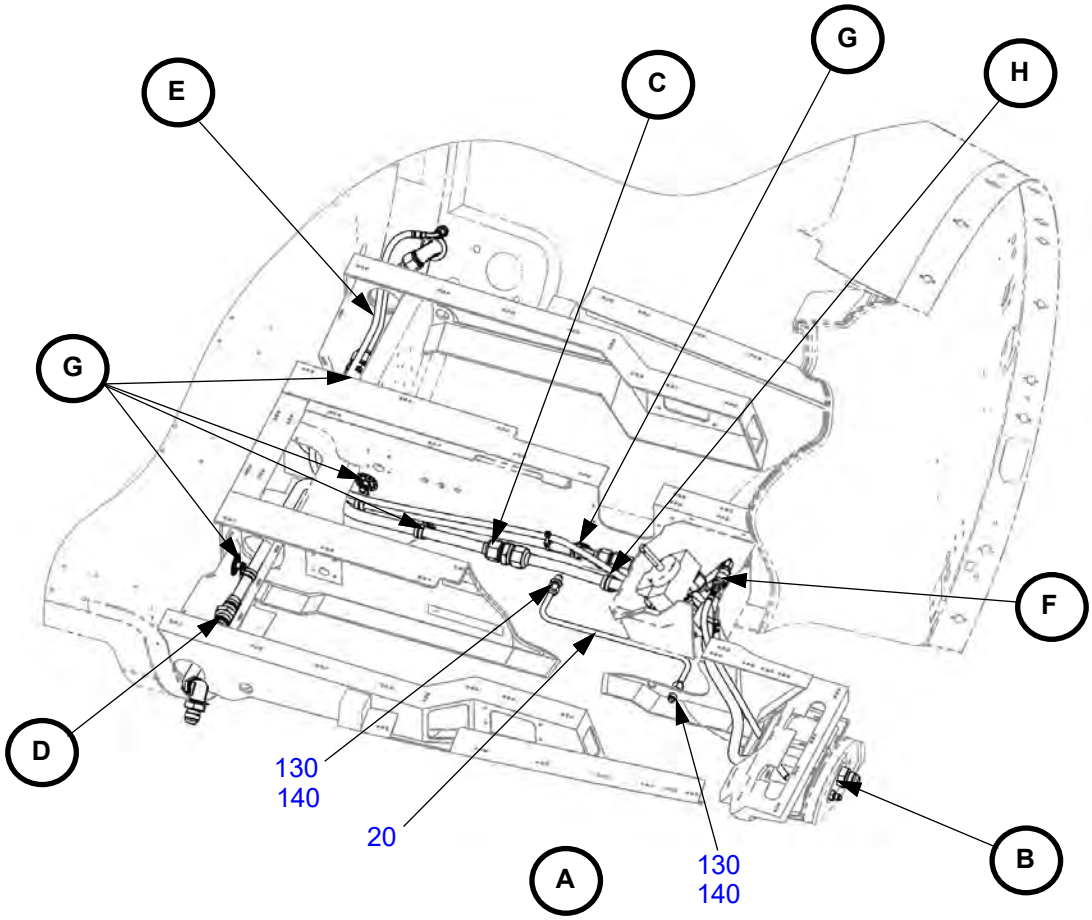

Figure 28-20.2: Fuel Lines, Firewall Aft (Continued)

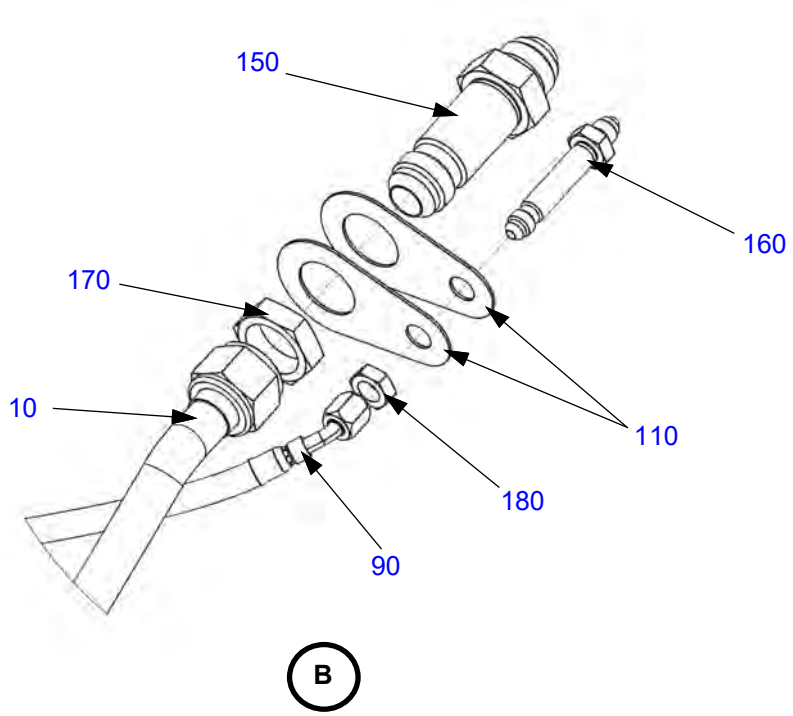

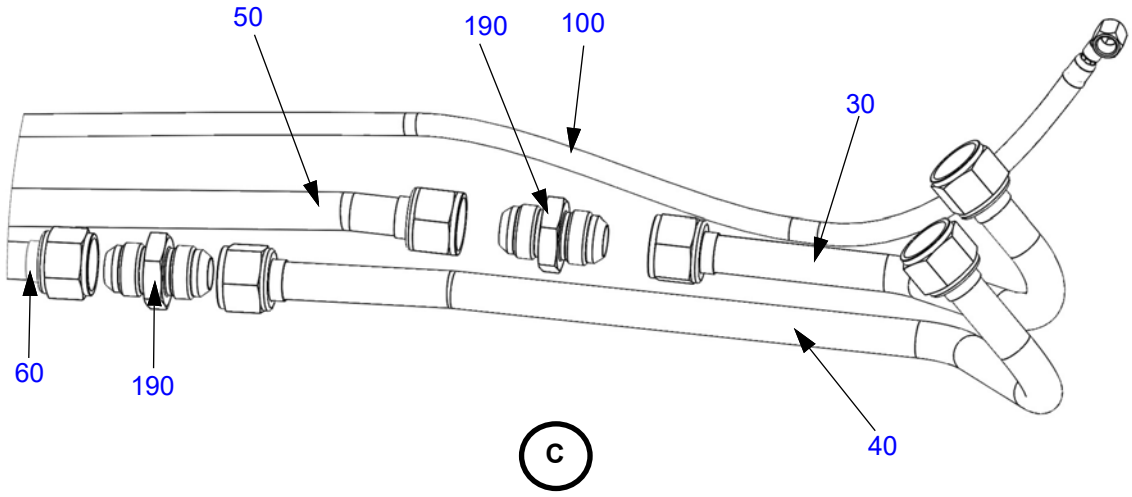

Figure 28-20.2: Fuel Lines, Firewall Aft (Continued)

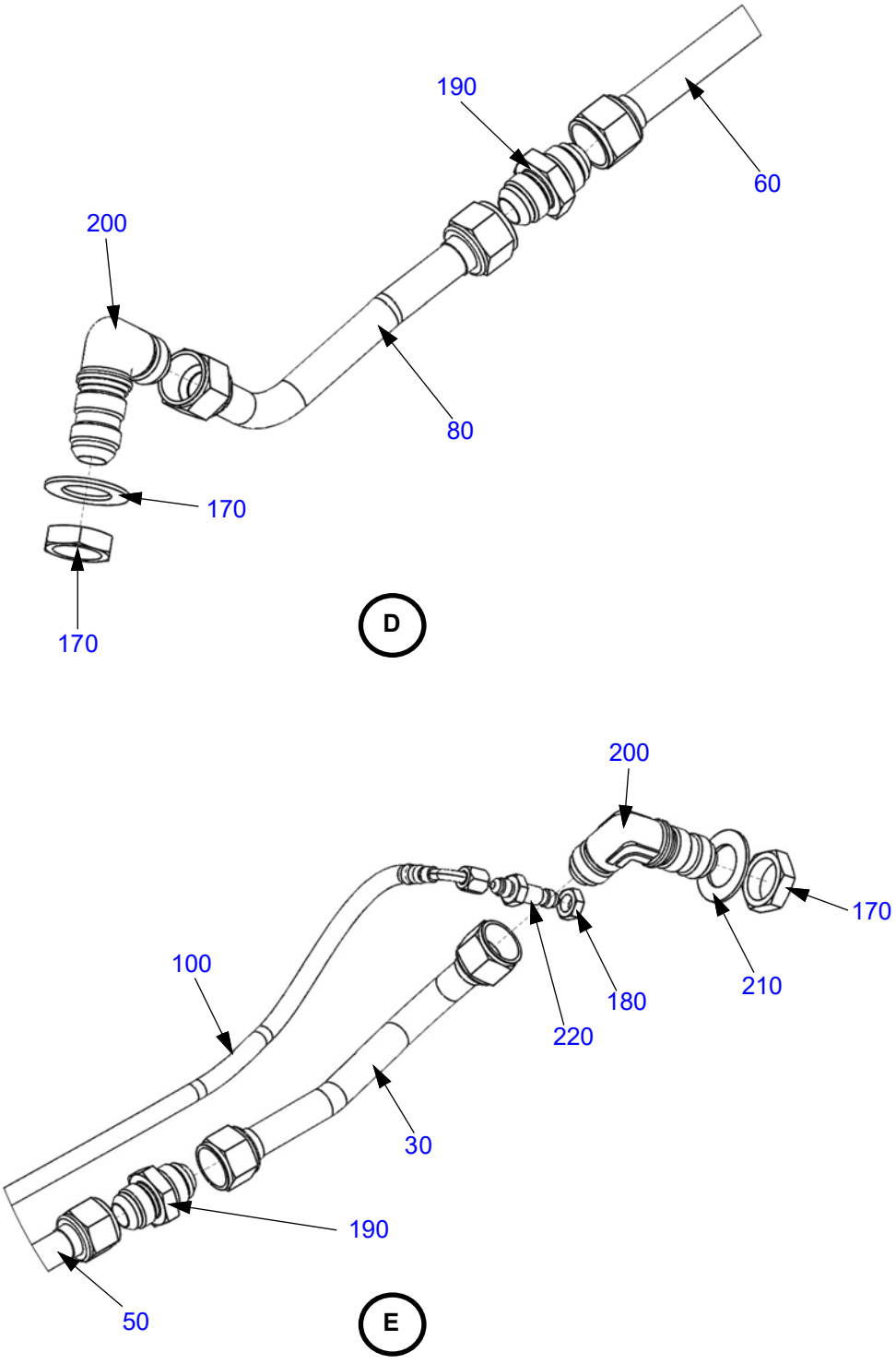

Figure 28-20.2: Fuel Lines, Firewall Aft (Continued)

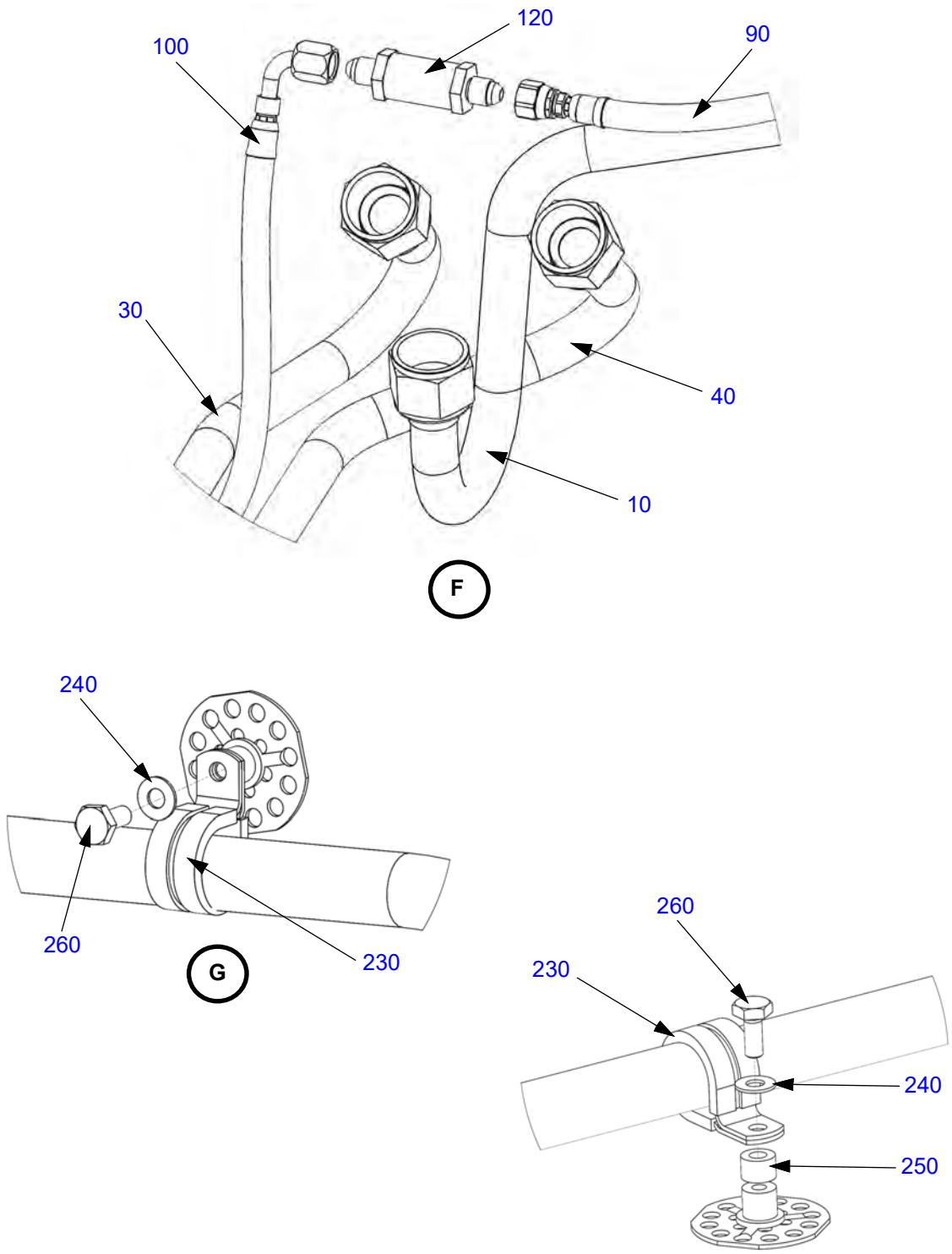

Table 28-20.2: Fuel Lines, Firewall Aft

Figure Item Number	Part Number	Part Name	Effectivity Code	Amount in Assy.
10	AK28201001	Tube Assembly, Fuel, Selector To Firewall	K003 and On	1
20	AK28201002	Tube Assembly, Fuel, Cross Drain	K003 and On	1
30	AK28201003	Tube Assembly, Fuel, Fwd, Left	K003 and On	1
40	AK28201004	Tube Assembly, Fuel, Fwd, Right	K003 and On	1
50	AK28201005	Tube Assembly, Fuel, Mid, Left	K003 and On	1
60	AK28201006	Tube Assembly, Fuel, Mid, Right	K003 and On	1
70	AK28201007	Tube Assembly, Fuel, Aft, Left	K003 and On	1
80	AK28201008	Tube Assembly, Fuel, Aft, Right	K003 and On	1
90	AE3663232E0220124K003-4CR-0220	Eaton / Parker: Hose Assy, -4 x 22", Straight To 45 Deg, Integral Chafe Sleeve	K003 and On	1
100	AE6204E0590-090124K012B0590C090	Eaton / Parker: Hose Assy, -4 x 58", 90° To 90°, Integral Chafe Sleeve	K003 and On	1
110	PK28201010	Plate, Firewall, Fuel Lines	K003 and On	2
120	PK99007050	Check Valve, In Line, 1/4 Tube Size .1 Psig Cracking	K003 and On	1
130	AN815-6	Union, Flared Tube, .500 nominal Tube Size	K003 and On	3
140	AS5178-06	Nut, Fitting, Steel, Ø.375 Tube x .563-18 Thread	K003 and On	2
150	PK29000012	Fitting, Union, Tube, 1.25 Bulkhead, 3/4" OD Tube	K003 and On	1
160	PK29000004	Fitting, Union, Tube, 1.25 Bulkhead, 1/4" OD Tube	K003 and On	1
170	AS5178J12	Nut, Fitting, CRES, Ø.750 Tube x 1.063-12 Thread	K003 and On	3
180	AS5178J04	Nut, Fitting, CRES, Ø.250 Tube x .438-20 Thread	K003 and On	2
190	AN815-12J	Union, Flared Tube	K003 and On	4

Figure Item Number	Part Number	Part Name	Effectivity Code	Amount in Assy.
200	AS1038J1212	Fitting, Elbow, 90 Deg, Bulkhead, Flared, 3/4" OD Tube	K003 and On	2
210	NAS1149F1790P	Washer, Flat 1-1/16 x .090	K003 and On	2
220	AS5406J04	Fitting, Union, Tube, .375 Bulkhead, 1/4" OD Tube	K003 and On	1
230	AS21919WDG12	Clamp, Loop Type, Cushioned, Ø .750	K003 and On	A/R
240	NAS1149F0332P	Washer, Flat #10 x .032	K003 and On	15
250	NAS42DD6-16N	Spacer, Aluminum .193 ID x .375 OD x .250	K003 and On	1
260	AN3-3A	Bolt, 10-32 x 15/32" Undrilled	K003 and On	4

Figure 28-20.3: Fuel Selector

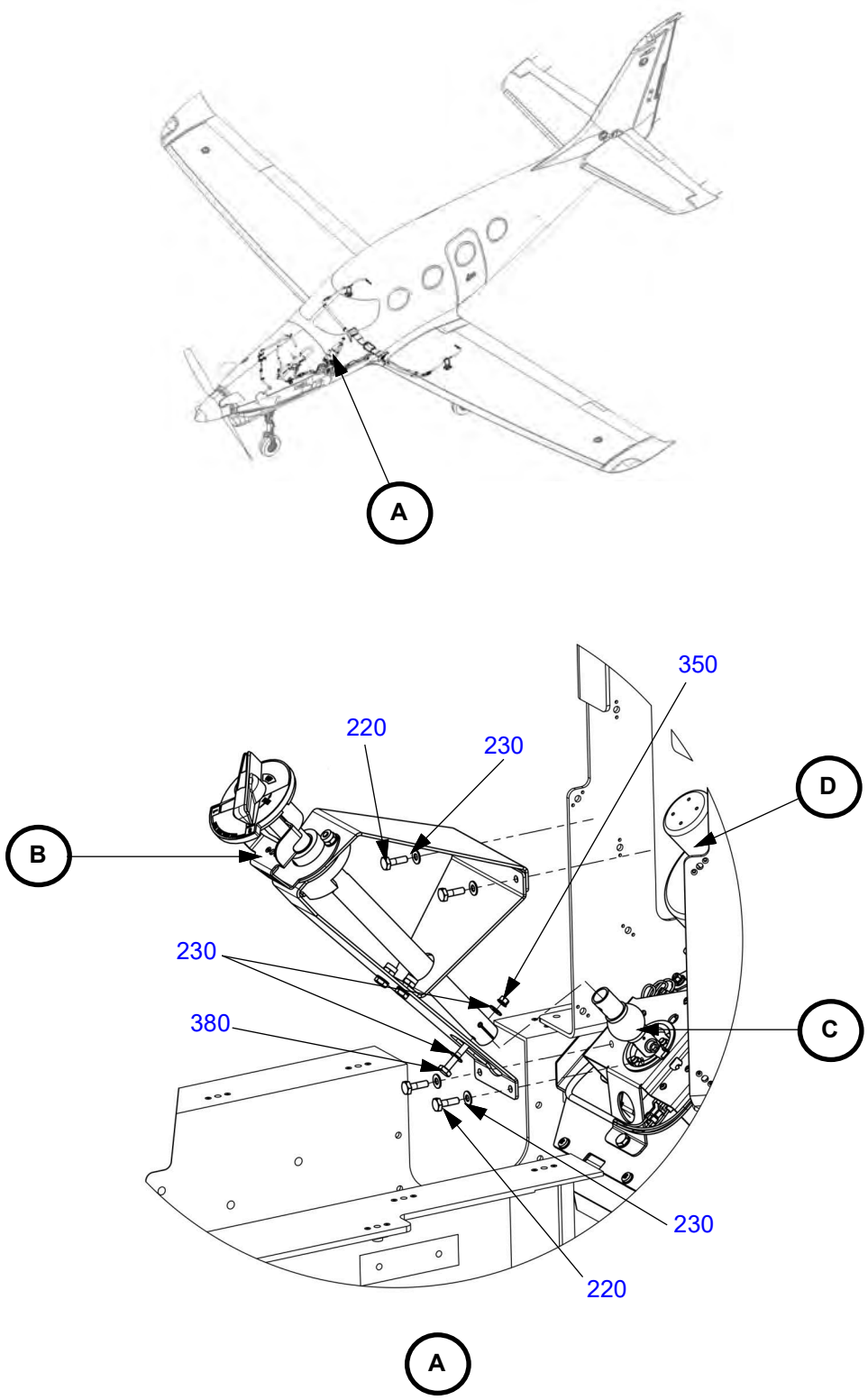

Figure 28-20.3: Fuel Selector (Continued)

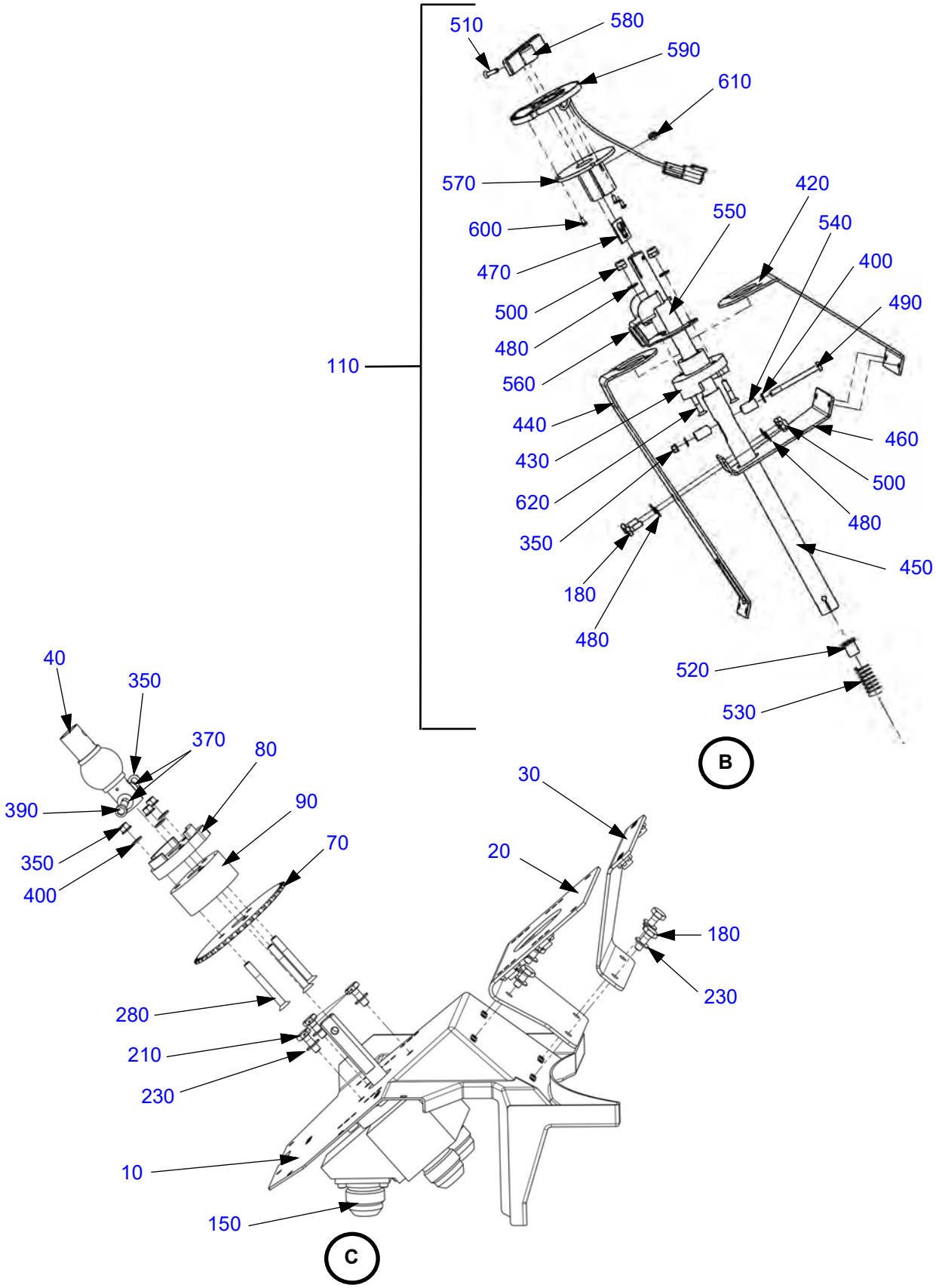

Figure 28-20.3: Fuel Selector (Continued)

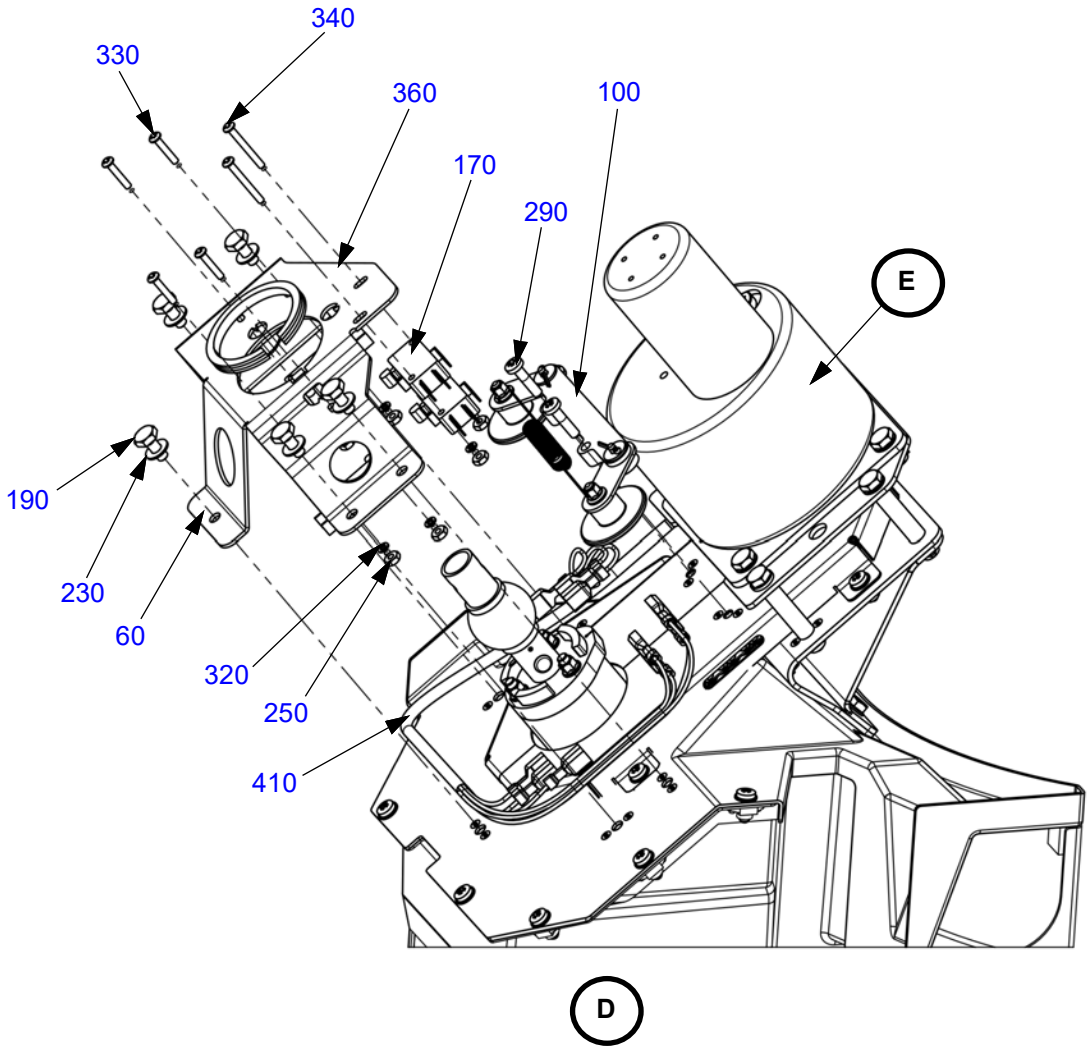

Figure 28-20.3: Fuel Selector (Continued)

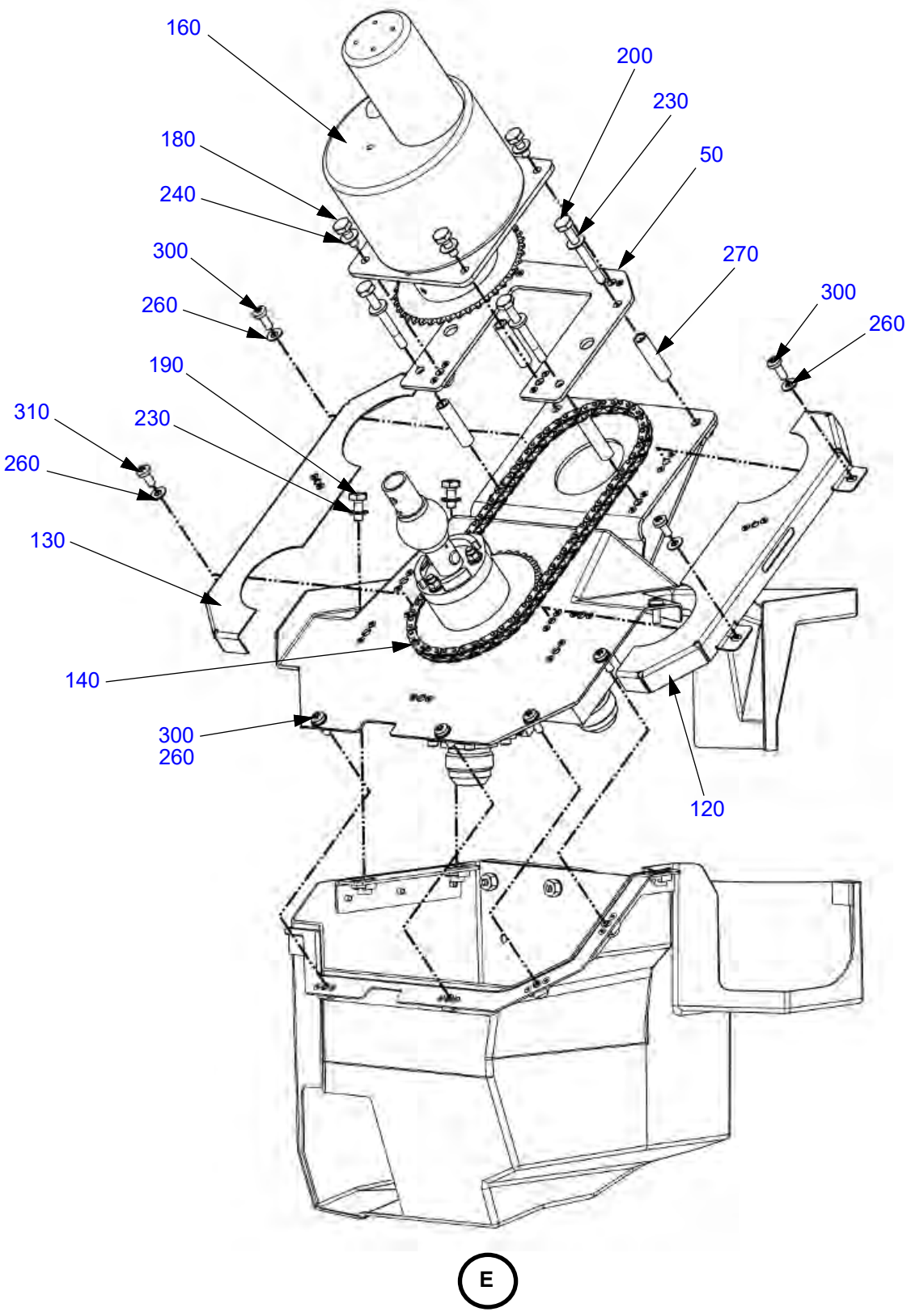

Table 28-20.3: Fuel Selector

Figure Item Number	Part Number	Part Name	Effectivity Code	Amount in Assy.
10	AK28203001	Assy, Closeout Lid, Enclosure Base	K003 and On	1
20	AK28203002	Assy, Mounting Plate, Servo	K003 and On	1
30	AK28203003	Assy, Support Flange, Mounting Plate, Servo	K003 and On	1
40	PK28203010	Joint-universal, Heavy Duty, .500 ID x .620 OD	K003 and On	1
50	AK28203004	Assy, Spanner Plate, Servo	K003 and On	1
60	PK28203005	Mounting Plate, Microswitches	K003 and On	1
70	PK99007008	Sprocket, 40 Tooth, .25 Pitch, .500 Dia. Bore	K003 and On	1
80	PK28203006	Cam, Microswitch, Top	K003 and On	1
90	PK28203007	Cam, Microswitch, Bottom	K003 and On	1
100	AK28203100	Assy, Chain Tensioner, Fuel Tank Selector	K003 and On	1
110	AK28203200	Assy, Shaft, Fuel Selector, Auto Balancing	K003 and On	1
120	AK28203008	Assy, Shield, Sprockets, Servo, Right	K003 and On	1
130	AK28203009	Assy, Shield, Sprockets, Servo, Left	K003 and On	1
140	AK28203400	Chain Assy, Fuel Selector, Auto Balancing	K003 and On	1
150	PK99005265	Valve, Fuel Selector, Auto-valve	K003 and On	1
160	0106-2-T3	Servo, Sprocket Drive, 40 Tooth, S-tec	K003 and On	1
170	V7-1C17E9-201	Switch, Miniature, 15.1 Amps, Honeywell	K003 and On	4
180	AN3-4A	Bolt, 10-32 x 17/32" Undrilled	K003 and On	8
190	AN3-3A	Bolt, 10-32 x 15/32" Undrilled	K003 and On	9
200	AN3-16A	Bolt, 10-32 x 1-25/32" Undrilled	K003 and On	4
210	AN3H4A	Bolt, 10-32 x 17/32" Drilled Head	K003 and On	3
220	AN3-5A	Bolt, 10-32 x 21/32" Undrilled	K003 and On	4
230	NAS1149F0332P	Washer, Flat #10 x .032	K003 and On	26
240	NAS1149F0363P	Washer, Flat #10 x .063	K003 and On	2

Figure Item Number	Part Number	Part Name	Effectivity Code	Amount in Assy.
250	MS35649-242	Nut, Plain, Hexagon, .112-40	K003 and On	6
260	NAS1149FN832P	Washer, Flat #8 x .032	K003 and On	9
270	NAS43DD3-79N	Spacer, Aluminum .214 ID x .312 OD x 1.234	K003 and On	4
280	MS24694-S67	Screw, Machine, C'sunk Ø .190 x 1-19/32	K003 and On	3
290	MS27039-0811	Screw, Pan Head, .164 x .719 Lg.	K003 and On	2
300	MS27039-0807	Screw, Pan Head, .164 x .469 Lg.	K003 and On	7
310	MS27039-0806	Screw, Pan Head, .164 x .406 Lg.	K003 and On	2
320	MS35338-40	Washer, Lock-spring, Ø.112	K003 and On	6
330	MS21090-0415	Screw, Self-locking, Panhead, Ø.112 x .625 Lg.	K003 and On	4
340	MS21090-0418	Screw, Self-locking, Panhead, Ø.112 x 1.000 Lg.	K003 and On	2
350	MS21042L3	Nut, Self-locking, 450°, Reduced #10-32	K003 and On	6
360	PK28203012	Bushing, Grooved, Internal	K003 and On	1
370	NAS1149F0316P	Washer, Flat #10 x .016	K003 and On	2
380	AN3-10A	Bolt, 10-32 x 1-1/32" Undrilled	K003 and On	1
390	NAS1351-3-14P	Screw, Socket Head Ø .190-32 x .875	K003 and On	1
400	NAS620C10L	Washer, Reduced OD, CRES, .195 ID x .354 OD	K003 and On	5
410	HK25100036	Harness Assy, Auto Fuel Tank Selector	K003 and On	1
420	PK28203201	Bracket, Support, Fuel Selector Shaft	K003 and On	1
430	PK28203202	Detent Bearing, Fuel Selector Shaft	K003 and On	1
440	PK28203203	Bracket, Compression, Fuel Selector Shaft	K003 and On	1
450	PK28203205	Drive Tube, Lower, Fuel Selector	K003 and On	1
460	PK28203207	Brace, Fuel Selector Brackets	K003 and On	1
470	AK28203210	Assy, Lock Plate, Knob, Fuel Selector	K003 and On	1
480	NAS1149F0332P	Washer, Flat #10 x .032	K003 and On	6

Figure Item Number	Part Number	Part Name	Effectivity Code	Amount in Assy.
490	MS27039-1-34	Screw, Pan Head, .190 x 1.688 Lg.	K003 and On	1
500	MS21044N3	Nut, Self-locking, Steel 10-32	K003 and On	4
510	MS24693-29B	Screw, Machine, C'sunk, Blk Oxide Ø .138 x 0.625	K003 and On	1
520	PK99007013	Shoulder Washer, Nylon	K003 and On	1
530	PK99006007	Spring, Compression, .625 Dia.	K003 and On	1
540	PK99007014	Protrude Spacer, Fuel Selector	K003 and On	2
550	AK28203206	Assy, Drive Tube, Top, Fuel Selector	K003 and On	1
560	AK28203212	Assy, Pedestal Panel Dowel Bracket, IP	K003 and On	1
570	PK28203211	Spacer, Light Plate, Fuel Selector	K003 and On	1
580	AK28203208	Assy, Knob, Fuel Selector, Valve	K003 and On	1
590	AK39109000	Assy, Light Plate, Fuel Selector	K003 and On	1
600	MS51957-13	Screw, Pan Head, .112 x .250lg., CRES	K003 and On	3
610	MS3367-4	Strap, Tie Down, Adjustable	K003 and On	1
620	MS24694-S56	Screw, Machine, C'sunk Ø .190 x 29/32	K003 and On	2

Figure 28-20.4: Fuel Lines, Firewall Forward

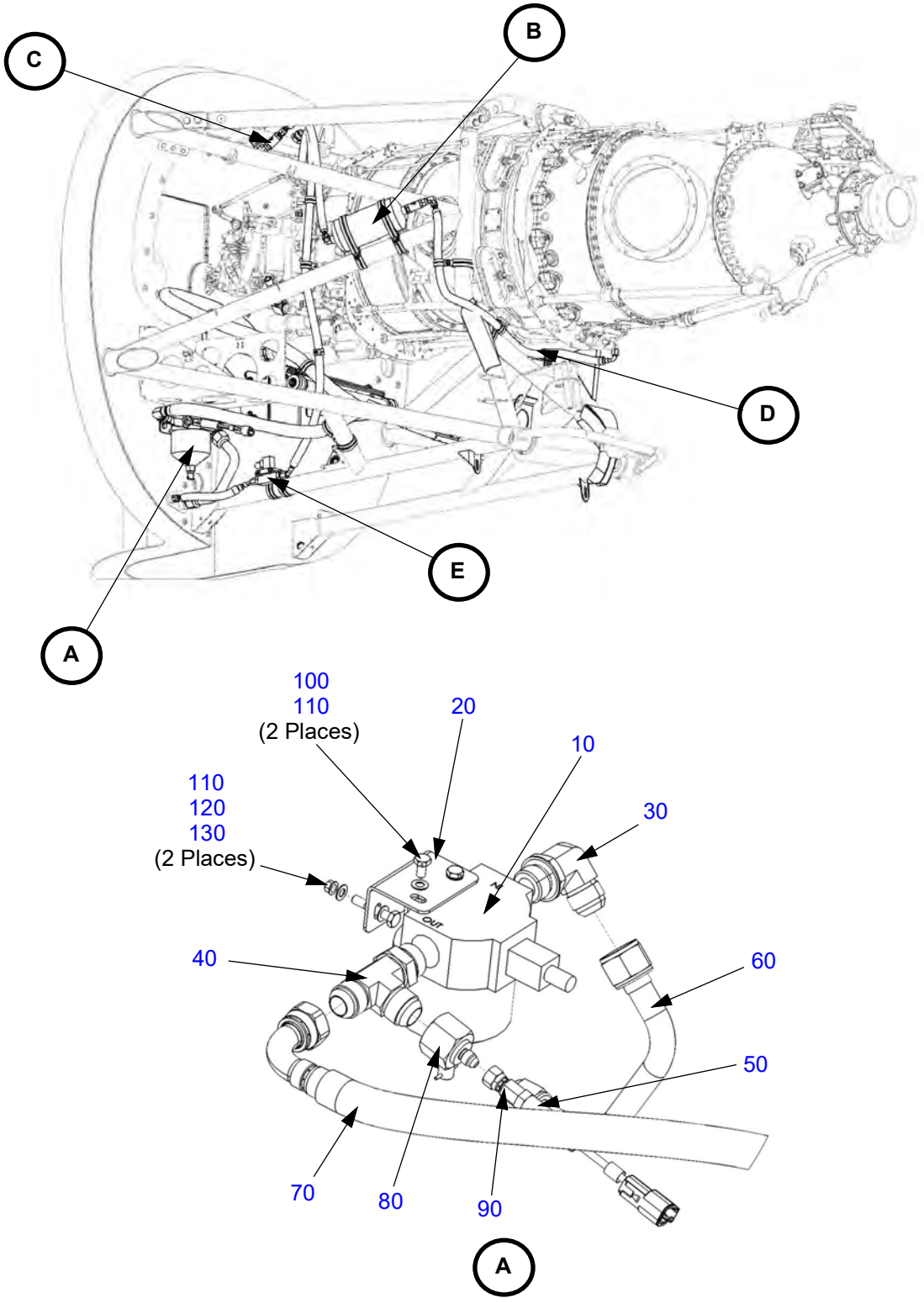

Figure 28-20.4: Fuel Lines, Firewall Forward (Continued)

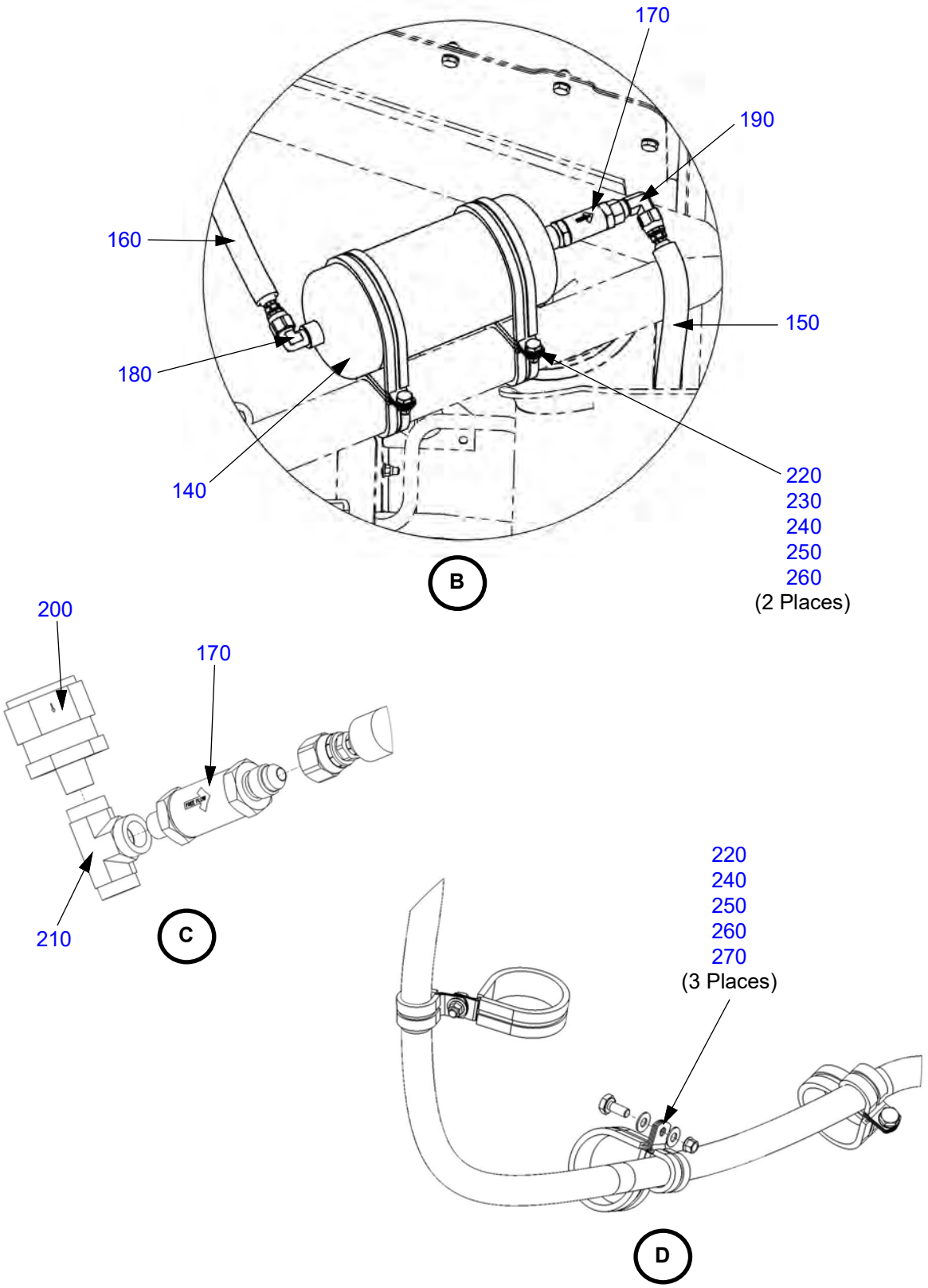

Figure 28-20.4: Fuel Lines, Firewall Forward (Continued)

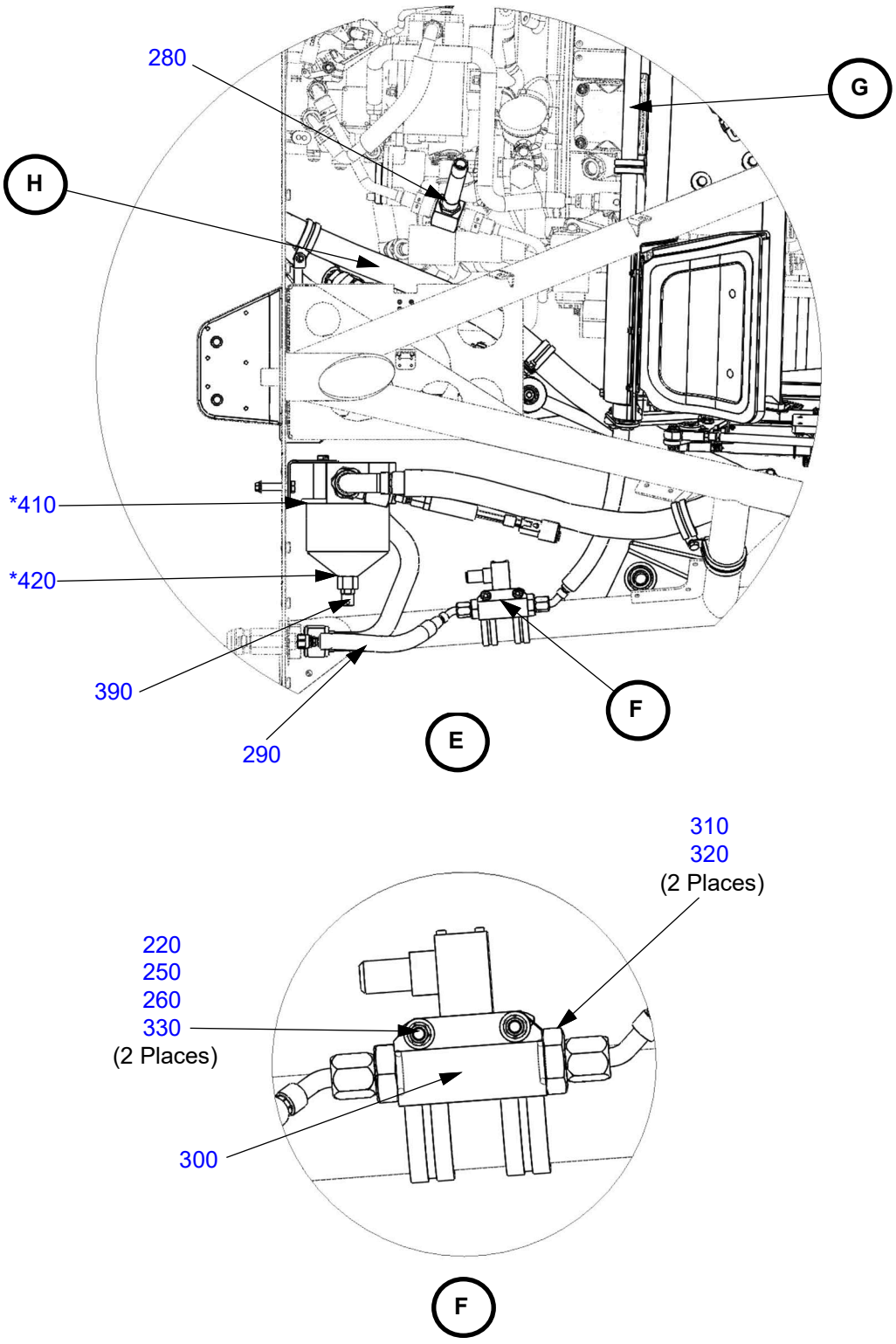

Figure 28-20.4: Fuel Lines, Firewall Forward (Continued)

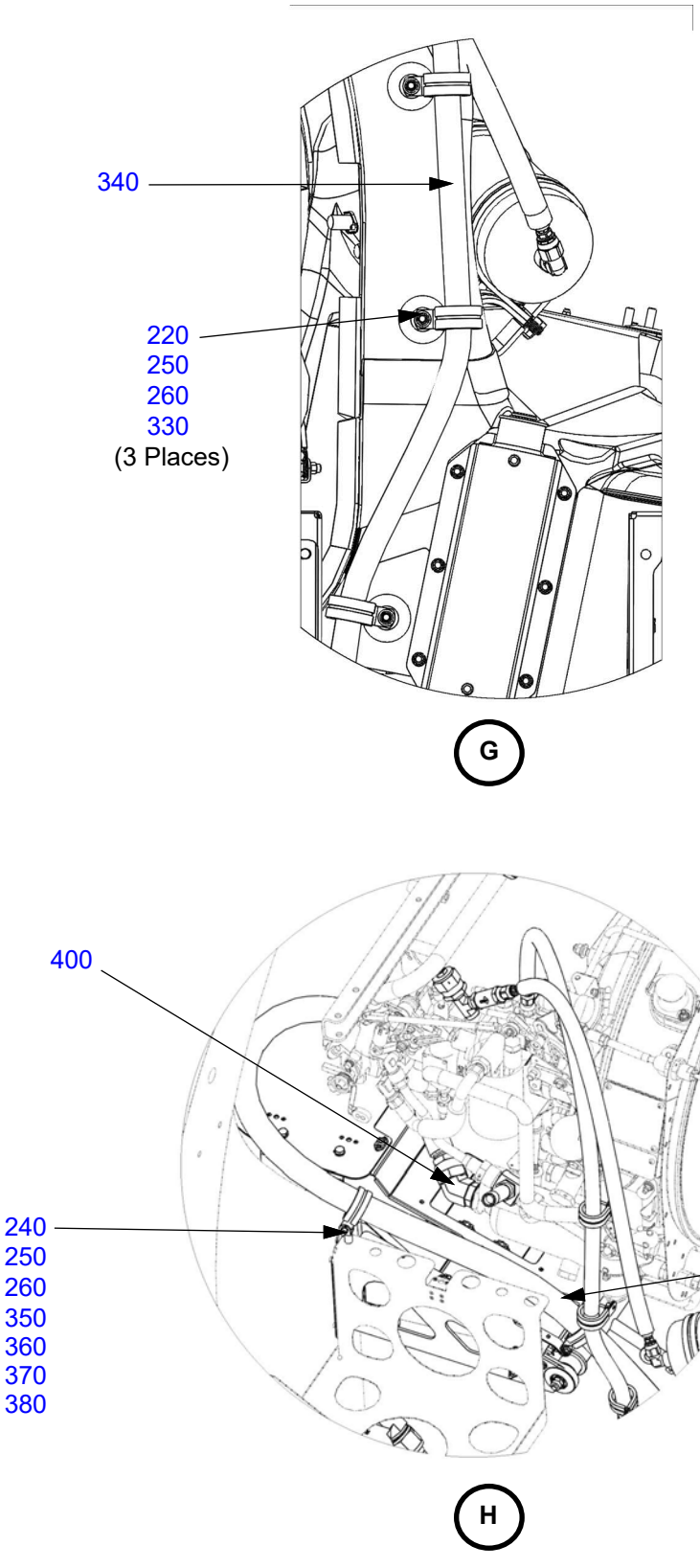

Table 28-20.4: Fuel Lines, Firewall Forward

Figure Item Number	Part Number	Part Name	Effectivity Code	Amount in Assy.
10	03W062584	Filter, Fluid, Pressure, Fuel	K003 and On	1
20	PK28205001	Bracket, Fuel Filter	K003 and On	1
30	12C5OX-SS	Parker: Fitting, Elbow, SAE-ORB / 37 Deg Flare	K003 and On	1
40	12 R5OX	Parker: 37° Flare To Straight Thread Tee, SAE-ORB, -12	K003 and On	1
50	AK28205200	Fuel Pressure Transducer with Connector	K003 and On	1
60	AK28205011	Tube Assy, Fuel, Firewall To Fuel Filter	K003 and On	1
70	AE2463532K0681 171J005-12CR-0681	Eaton/Parker: Hose Assy, -12 x 68.125", Straight To 90° Fittings, Integral Fire Sleeve	K003 and On	1
80	12-4 TRTXN-SS	Parker: Reducer, -12 To -4	K003 and On	1
90	4 G6X-SS	Parker: Gauge Fitting , NPT / 37 Degree Swivel	K003 and On	1
100	AN4H3A	Bolt, 1/4-28 x 15/32" Drilled Head	K003 and On	2
110	NAS1149F0432P	Washer, Flat 1/4 x .032	K003 and On	6
120	AN4-13A	Bolt, 1/4-28 x 1-13/32" Undrilled	K003 and On	2
130	MS21042L4	Nut, Self-locking, 450°, Reduced 1/4-28	K003 and On	2
140	AK28205100	Accumulator, Fuel Blowback	K003 and On	1
150	AE2463532E030 0171J005-4CR-0300	Eaton/parker: Hose Assy, -4 x 30.0", Straight To 90 Deg, Integral Fire Sleeve	K003 and On	1
160	AE2463530E019 6 171J001-4CR-0196	Eaton/parker: Hose Assy, -4 x 19.75", Straight To Straight, Integral Fire Sleeve	K003 and On	1
170	PK99005256	Check Valve, 1/8 Male NPT To 1/4 JIC	K003 and On	2
180	MS20822-4J	Elbow, Flared, Tube And Pipe Threads, 90°, Stainless Steel	K003 and On	1
190	4 C6X-SS	Parker: Fitting, 90 Deg Swivel, Male - Female Flare, 1/4" OD Tube	K003 and On	1

Figure Item Number	Part Number	Part Name	Effectivity Code	Amount in Assy.
200	PK99005254	Filter, In-line	K003 and On	1
210	1/8 MMO-SS	Parker: 1/8 Female NPT Tee	K003 and On	1
220	AS21919WCJ24	Clamp, Loop Type, Cushioned, CRES, Ø 1.500	K003 and On	7
230	AS21919WCJ48	Clamp, Loop Type, Cushioned, CRES, Ø 3.000	K003 and On	2
240	AN3-3A	Bolt, 10-32 x 15/32" Undrilled	K003 and On	6
250	NAS1149F0332P	Washer, Flat #10 x .032	K003 and On	16
260	MS21042L3	Nut, Self-locking, 450°, Reduced #10-32	K003 and On	8
270	AS21919WCJ10	Clamp, Loop Type, Cushioned, CRES, Ø .625	K003 and On	3
280	PK99005252	Fuel Flow Transducer	K003 and On	1
290	AE2463531E0076 171J003-4CR-0076	Eaton/parker: Hose Assy, -4 x 7.75", Straight To 45 Deg, Integral Fire Sleeve	K003 and On	1
300	PK99005253	Solenoid Valve	K003 and On	1
310	AS5174J0604	Reducer - External Thread Flared Tube	K003 and On	2
320	M83461/2-906	O-ring, SAE Straight Thread Port, -06	K003 and On	2
330	AN3-17A	Bolt, 10-32 x 1-29/32" Undrilled	K003 and On	2
340	AE2463531E0496 171J003-4CR-0496	Eaton/parker: Hose Assy, -4 x 49.75", Straight To 45 Deg, Integral Fire Sleeve	K003 and On	1
350	AS21919WCJ18	Clamp, Loop Type, Cushioned, CRES, Ø 1.125	K003 and On	1
360	AN3-13A	Bolt, 10-32 x 1-13/32" Undrilled	K003 and On	1
370	AN743-C12	Bracket, Support Clamp	K003 and On	1
380	NAS43HT3-64	Spacer, Steel .214 ID x .312 OD x 1.000	K003 and On	1
390	CCA-1550	Curtis Superior Valve: Drain Valve, 1/8 NPT	K003 and On	1
400	12-10 V50X-SS	Parker: Fitting, 45 Deg, -12 JIC To -10 ORB	K003 and On	1

Figure Item Number	Part Number	Part Name	Effectivity Code	Amount in Assy.
*410	MS29513-233	Packing, Preformed, O-Ring	K003 and On	1
*420	600-3142-1/2	Gasket, Washer Seal (Stat-O-Seal)	K003 and On	1

* Item not illustrated.

Figure 28-20.5: Fuel Auto Select Controller

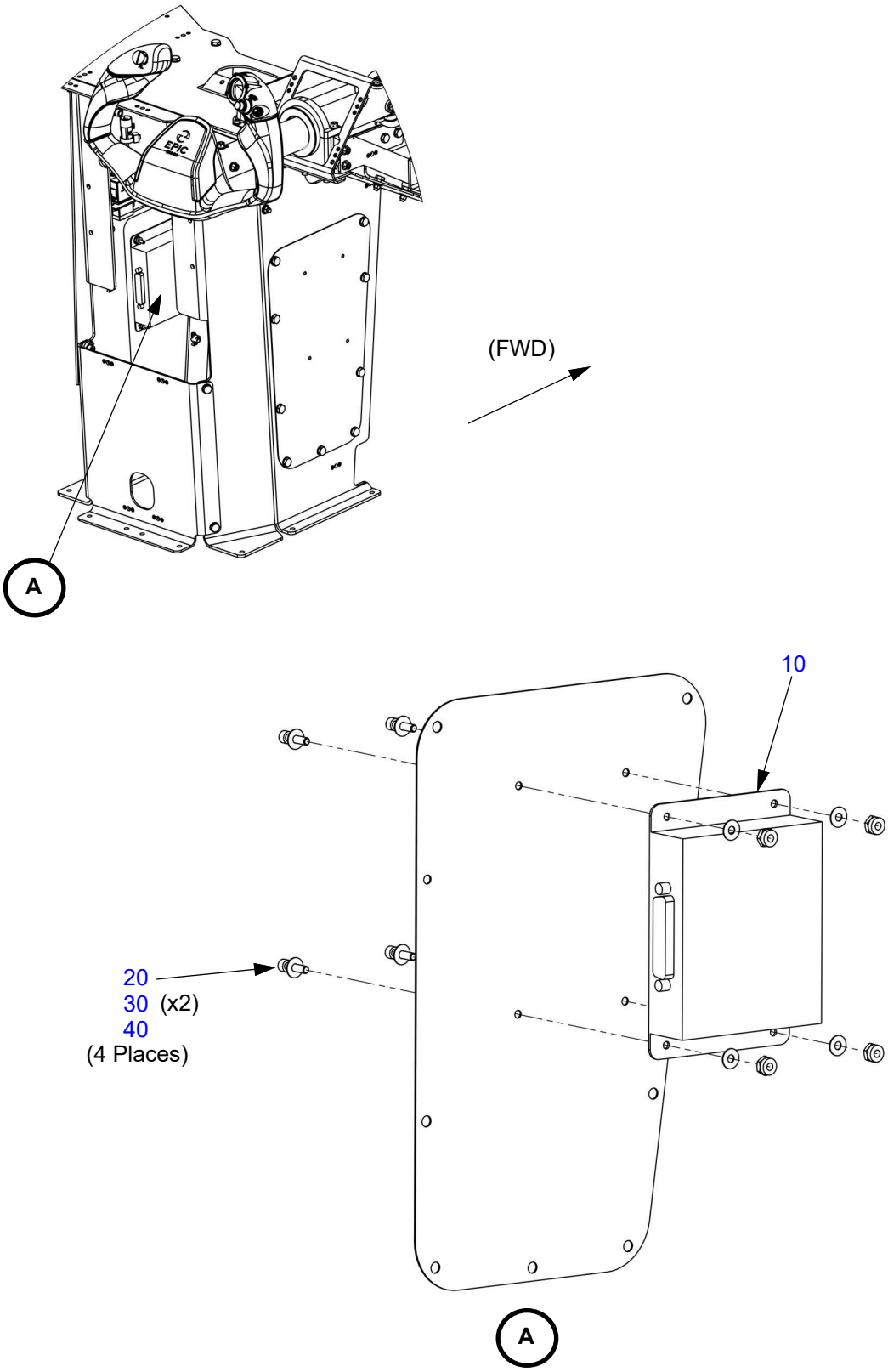

Table 28-20.5: Fuel Auto Select Controller

Figure Item Number	Part Number	Part Name	Effectivity Code	Amount in Assy.
10	PK99008010	Auto Fuel Control	K003 and On	1
20	NAS1352-06-9P	Screw, Socket Head .138-32 x .563	K003 and On	4
30	NAS1149FN616P	Washer, Flat #6 x .016	K003 and On	8
40	MS21044N06	Nut, Self-locking, Steel .138-32	K003 and On	4

This Page Intentionally Left Blank

INDICATING

Figure 28-30.1: Fuel Probes

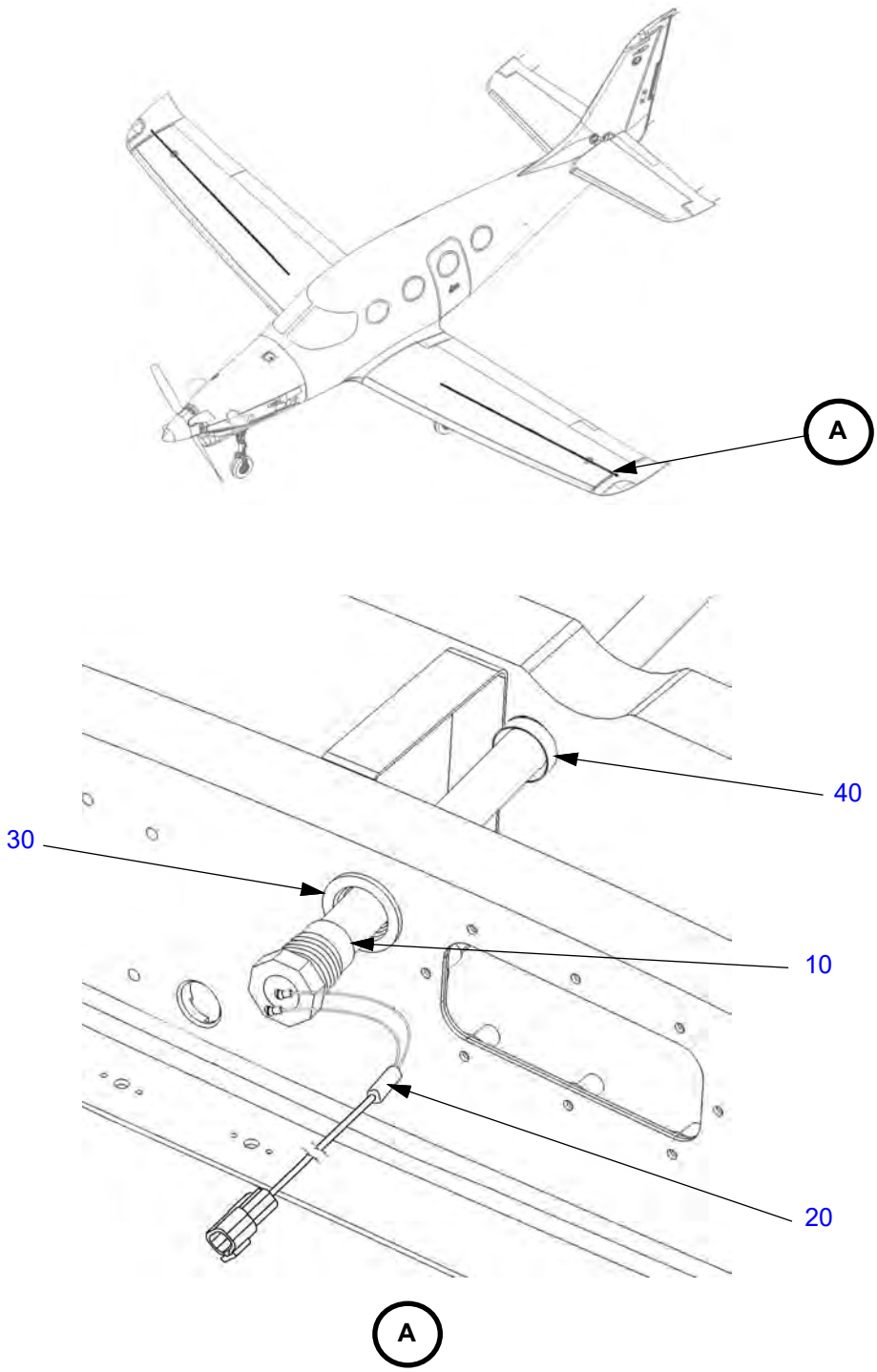

Left side shown, right side opposite.

Table 28-30.1: Fuel Probes

Figure Item Number	Part Number	Part Name	Effectivity Code	Amount in Assy.
10	P-300C	Fuel Probe	K003 and On	2
20	IMC-96-180	IMC Interface Module	K003 and On	2
30	515-0504-00	Fuel Probe Coupler 3/4" NPT	K003 and On	2
40	520-0008-00	Guide, Fuel Probe	K003 and On	12

Figure 28-30.2: Fuel Pressure and Fuel Flow Transducers

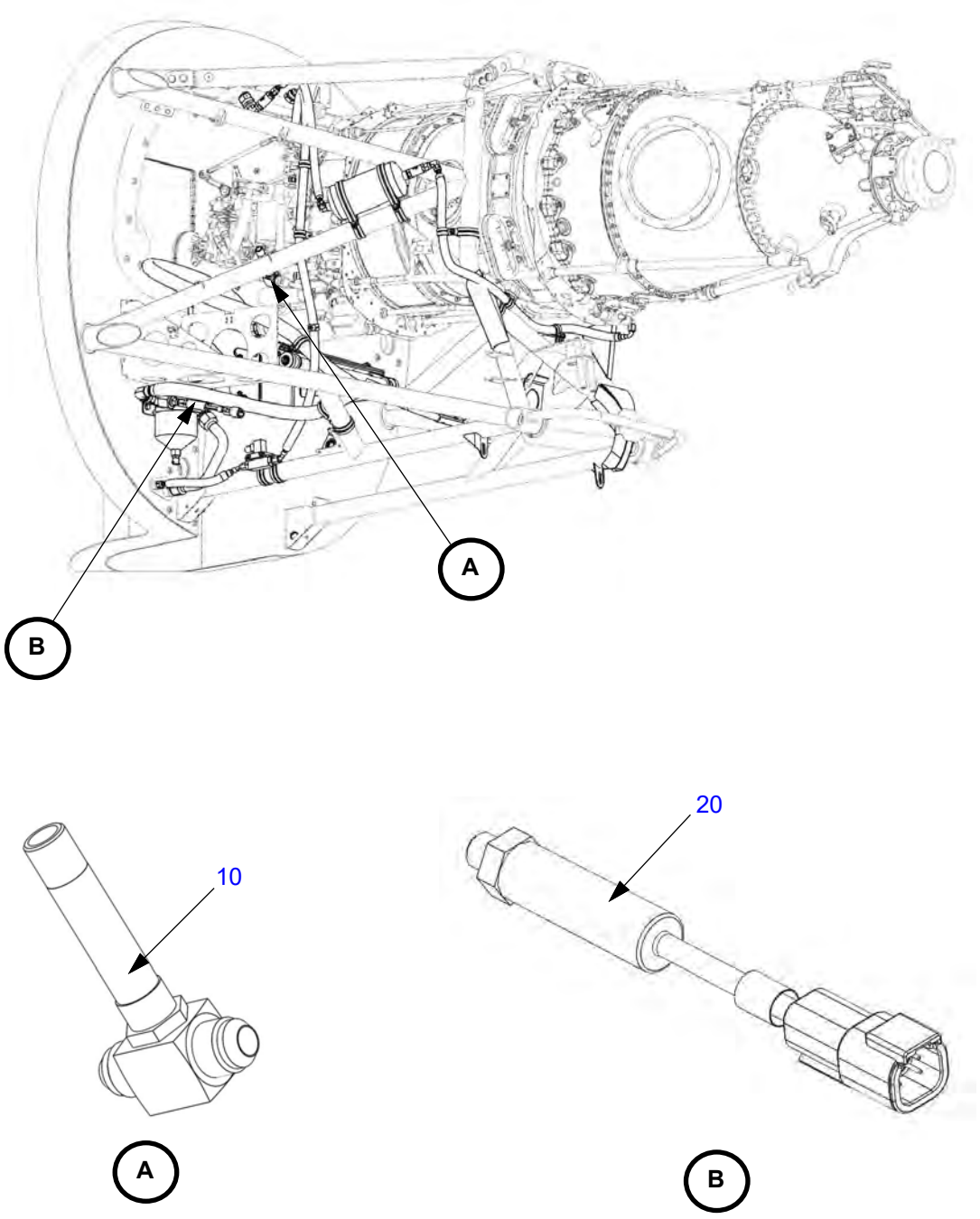

Table 28-30.2: Fuel Pressure and Fuel Flow Transducers

Figure Item Number	Part Number	Part Name	Effectivity Code	Amount in Assy.
10	PK99005252	Fuel Flow Transducer	K003 and On	1
20	AK28205200	Fuel Pressure Transducer With Connector	K003 and On	1

CHAPTER
29

Hydraulic Power

This Page Intentionally Left Blank

Table of Contents
and
List of Effective Pages

Chapter/Section	Page Number	Effective Date
29-Title	Page 1	03 Apr 2020
29-Title	Page 2	03 Apr 2020
29-LOEP	Page 1	26 Mar 2024
29-LOEP	Page 2	26 Mar 2024
29-TOC	Page 1	13 Jan 2023
29-TOC	Page 2	03 Apr 2020
	Main	
29-10	Page 1	26 Mar 2024
29-10	Page 2	26 Mar 2024
29-10	Page 3	14 Jul 2021
29-10	Page 4	14 Jul 2021
29-10	Page 5	03 Apr 2020
29-10	Page 6	03 Apr 2020
29-10	Page 7	03 Apr 2020
29-10	Page 8	03 Apr 2020
29-10	Page 9	03 Apr 2020
29-10	Page 10	03 Apr 2020
29-10	Page 11	13 Jan 2023
29-10	Page 12	13 Jan 2023
29-10	Page 13	03 Apr 2020
29-10	Page 14	14 Jul 2021
29-10	Page 15	14 Jul 2021
29-10	Page 16	03 Apr 2020
29-10	Page 17	03 Apr 2020
29-10	Page 18	03 Apr 2020
29-10	Page 19	03 Apr 2020
29-10	Page 20	03 Apr 2020
29-10	Page 21	03 Apr 2020
29-10	Page 22	03 Apr 2020
29-10	Page 23	03 Apr 2020
29-10	Page 24	03 Apr 2020
29-10	Page 25	03 Apr 2020
29-10	Page 26	03 Apr 2020
29-10	Page 27	03 Apr 2020
29-10	Page 28	03 Apr 2020
29-10	Page 29	26 Mar 2024

29-10 ..... Page 30 ..... 26 Mar 2024
29-10 ..... Page 31 ..... 26 Mar 2024
29-10 ..... Page 32 ..... 26 Mar 2024
29-10 ..... Page 33 ..... 26 Mar 2024
29-10 ..... Page 34 ..... 26 Mar 2024
29-10 ..... Page 35 ..... 26 Mar 2024
29-10 ..... Page 36 ..... 26 Mar 2024

Auxiliary

29-20 ..... Page 1 ..... 26 Mar 2024
29-20 ..... Page 2 ..... 26 Mar 2024
29-20 ..... Page 3 ..... 26 Mar 2024
29-20 ..... Page 4 ..... 26 Mar 2024
29-20 ..... Page 5 ..... 26 Mar 2024
29-20 ..... Page 6 ..... 26 Mar 2024

CHAPTER 29

Table of Contents

List of Effective Pages ..... 29-LOEP / Page 1
Table of Contents ..... 29-TOC / Page1

Paragraph **Page Number**

Main

Figure 29-10.1: Hydraulic Pump ..... 29-10 / Page 1
Table 29-10.1: Hydraulic Pump ..... 29-10 / Page 2
Figure 29-10.2: Hydraulic Reservoir ..... 29-10 / Page 3
Table 29-10.2: Hydraulic Reservoir ..... 29-10 / Page 4
Figure 29-10.3: Hydraulic Accumulator ..... 29-10 / Page 5
Table 29-10.3: Hydraulic Accumulator ..... 29-10 / Page 6
Figure 29-10.4: Hydraulic Suppressor ..... 29-10 / Page 7
Table 29-10.4: Hydraulic Suppressor ..... 29-10 / Page 8
Figure 29-10.5: Hydraulic Pump Lines, Firewall Forward ..... 29-10 / Page 9
Table 29-10.5: Hydraulic Pump Lines, Firewall Forward ..... 29-10 / Page 11
Figure 29-10.6: Hydraulic Landing Gear Lines, Firewall Forward ..... 29-10 / Page 13
Table 29-10.6: Hydraulic Landing Gear Lines, Firewall Forward ..... 29-10 / Page 15
Figure 29-10.7: Hydraulic Reservoir Pneumatic Line, Firewall Forward ..... 29-10 / Page 17
Table 29-10.7: Hydraulic Reservoir Pneumatic Line, Firewall Forward ..... 29-10 / Page 18
Figure 29-10.8: Hydraulic Lines, Firewall Aft ..... 29-10 / Page 19
Table 29-10.8: Hydraulic Lines, Firewall Aft ..... 29-10 / Page 22
Figure 29-10.9: Hydraulic Lines, Wing Saddle ..... 29-10 / Page 24
Table 29-10.9: Hydraulic Lines, Wing Saddle ..... 29-10 / Page 27
Figure 29-10.10: Hydraulic Lines, Main Landing Gear and Reservoir ..... 29-10 / Page 28
Table 29-10.10: Hydraulic Lines, Main Landing Gear and Reservoir ..... 29-10 / Page 34

Auxiliary

Figure 29-20.1: Emergency Landing Gear Extension Bottle ..... 29-20 / Page 1
Table 29-20.1: Emergency Landing Gear Extension Bottle ..... 29-20 / Page 4

This Page Intentionally Left Blank

MAIN

Figure 29-10.1: Hydraulic Pump

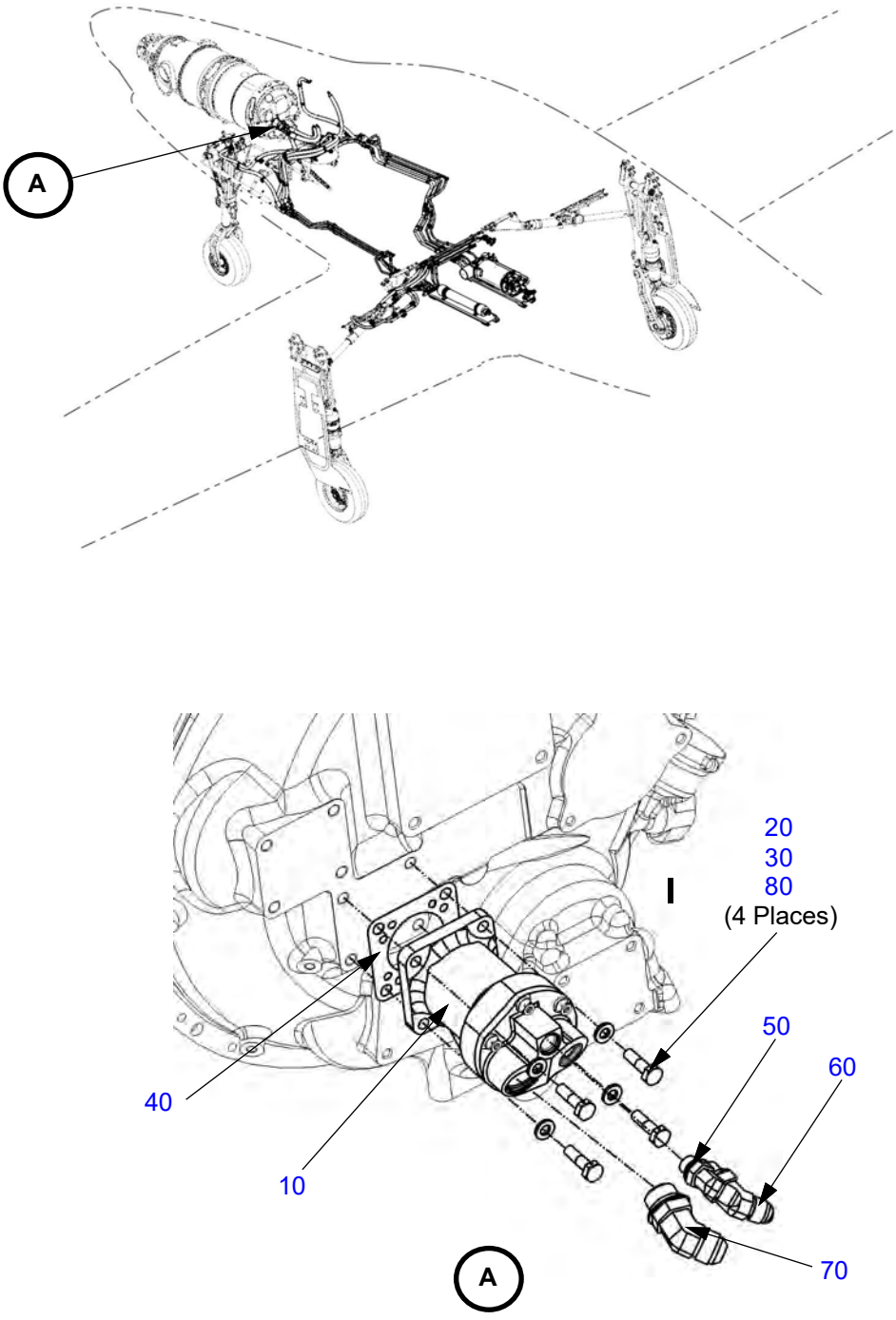

Table 29-10.1: Hydraulic Pump

Figure Item Number	Part Number	Part Name	Effectivity Code	Amount in Assy.
10	PK99007070	Pump, Hydraulic Power	K003 and On	1
20	AN4-6A	Bolt, 1/4-28 x 25/32" Undrilled	K003 and On	4
30	AN960-416L	Washer, Flat, Corrosion Resistant, 1/4-28 X .032 Thk.	K003 and On	4
40	AS3491-01	Gasket, Engine Accessory Drive	K003 and On	1
50	4 V5OX-SS	Parker: Fitting, 45 Deg Elbow, SAE-ORB/ 37 Deg Flare	K003 and On	1
60	6 V5OX-SS	Parker: Fitting, 45 Deg Elbow, SAE-ORB/ 37 Deg Flare	K003 and On	1
70	8 F5OX-SS	Parker: Fitting, Straight, SAE-ORB/37 Deg Flare	K003 and On	1
80	MS35338-44	Washer, Lock-spring, Ø.250	K003 and On	4

Figure 29-10.2: Hydraulic Reservoir

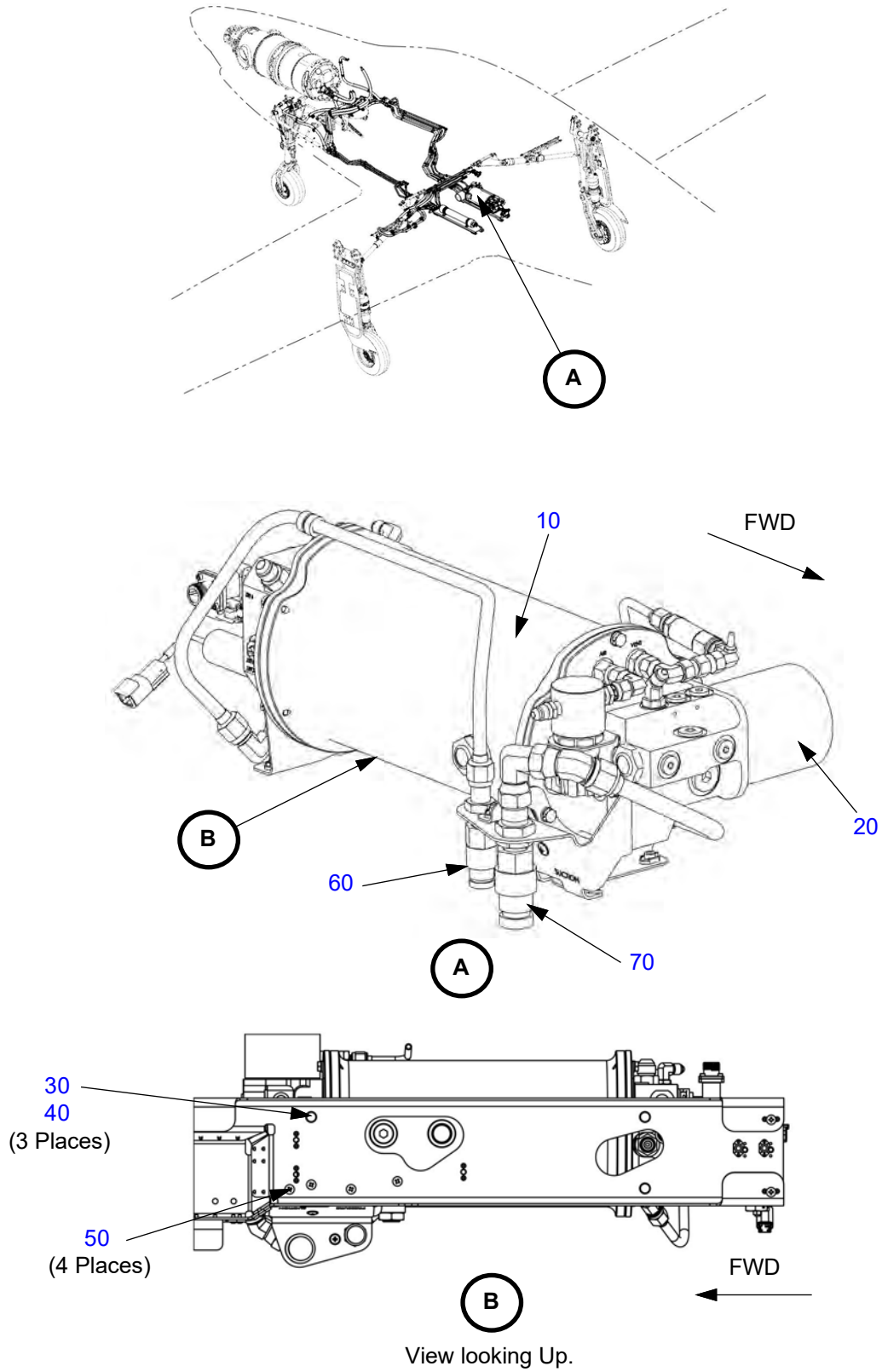

Table 29-10.2: Hydraulic Reservoir

Figure Item Number	Part Number	Part Name	Effectivity Code	Amount in Assy.
10	AK29131000	Reservoir Assembly, Hydraulic Power	K003 and On	1
20	PK99005201	Filter Element, Spin On	K003 and On	1
*	201025	Norman Filter Company	-	-
*	BE-10-18	Zinga Filtration Group	-	-
*	CP-1018	Lenz Inc.	-	-
30	AN3-4A	Bolt, 10-32 x 17/32" Undrilled	K003 and On	3
40	NAS1149F0332P	Washer, Flat #10 x .032	K003 and On	3
50	MS24694-S50	Screw, Machine, C'sunk Ø .190 x 17/32	K003 and On	4
60	S71-3N4-4F	Parker: Quick Coupling, 1/4" Nipple, Stainless	K003 and On	1
70	S71-3N6-6F	Parker: Quick Coupling, 3/8" Nipple, Stainless	K003 and On	1

* Alternate Part Number

Figure 29-10.3: Hydraulic Accumulator

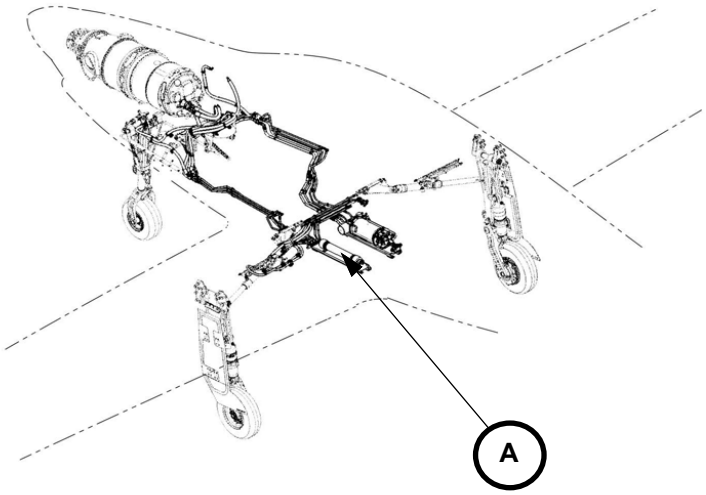

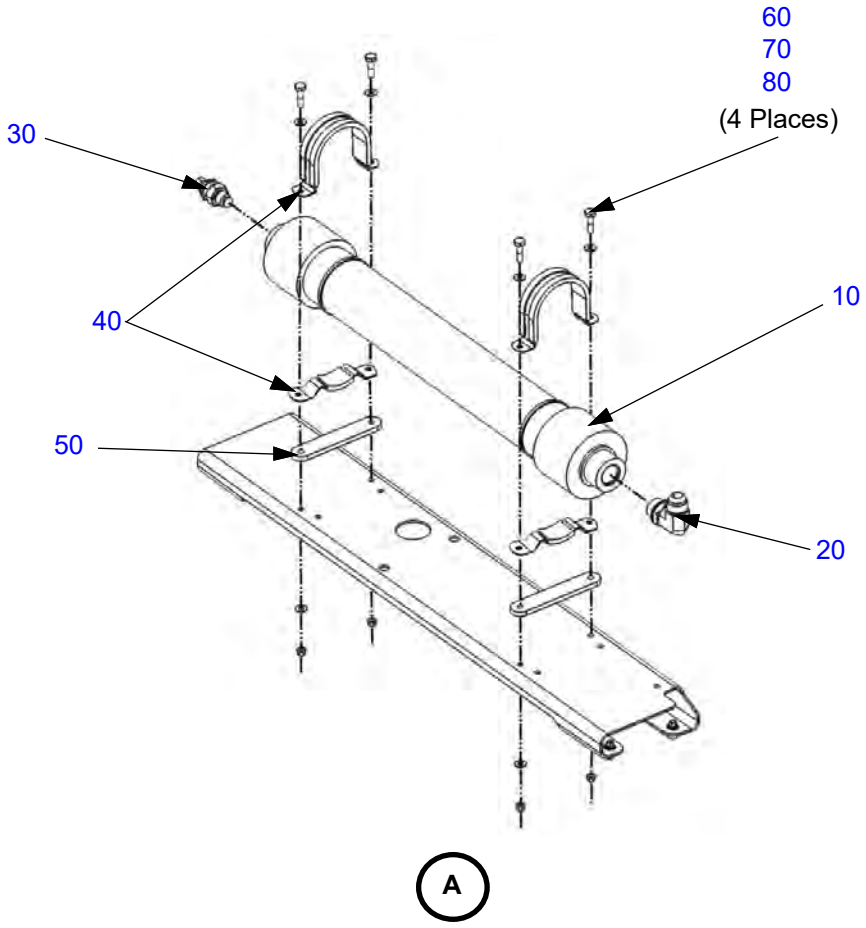

Table 29-10.3: Hydraulic Accumulator

Figure Item Number	Part Number	Part Name	Effectivity Code	Amount in Assy.
10	PK99005222	Accumulator - Cylindrical, 3000 PSI	K003 and On	1
20	8 C5OX-SS	Parker: Fitting, Elbow, SAE ORB - 37 Deg Flare	K003 and On	1
30	MS28889-2	Valve, Air, High Pressure Charging, 5000 PSI	K003 and On	1
40	M85449-1-36	Clamp Assy, Saddle-type, Cushioned	K003 and On	2
50	PK29130003	Spacer, Accumulator Mount	K003 and On	2
60	AN3-6A	Bolt, 10-32 x 25/32" Undrilled	K003 and On	4
70	NAS1149F0332P	Washer, Flat #10 x .032	K003 and On	8
80	MS21042L3	Nut, Self-locking, 450°, Reduced #10-32	K003 and On	4

Figure 29-10.4: Hydraulic Suppressor

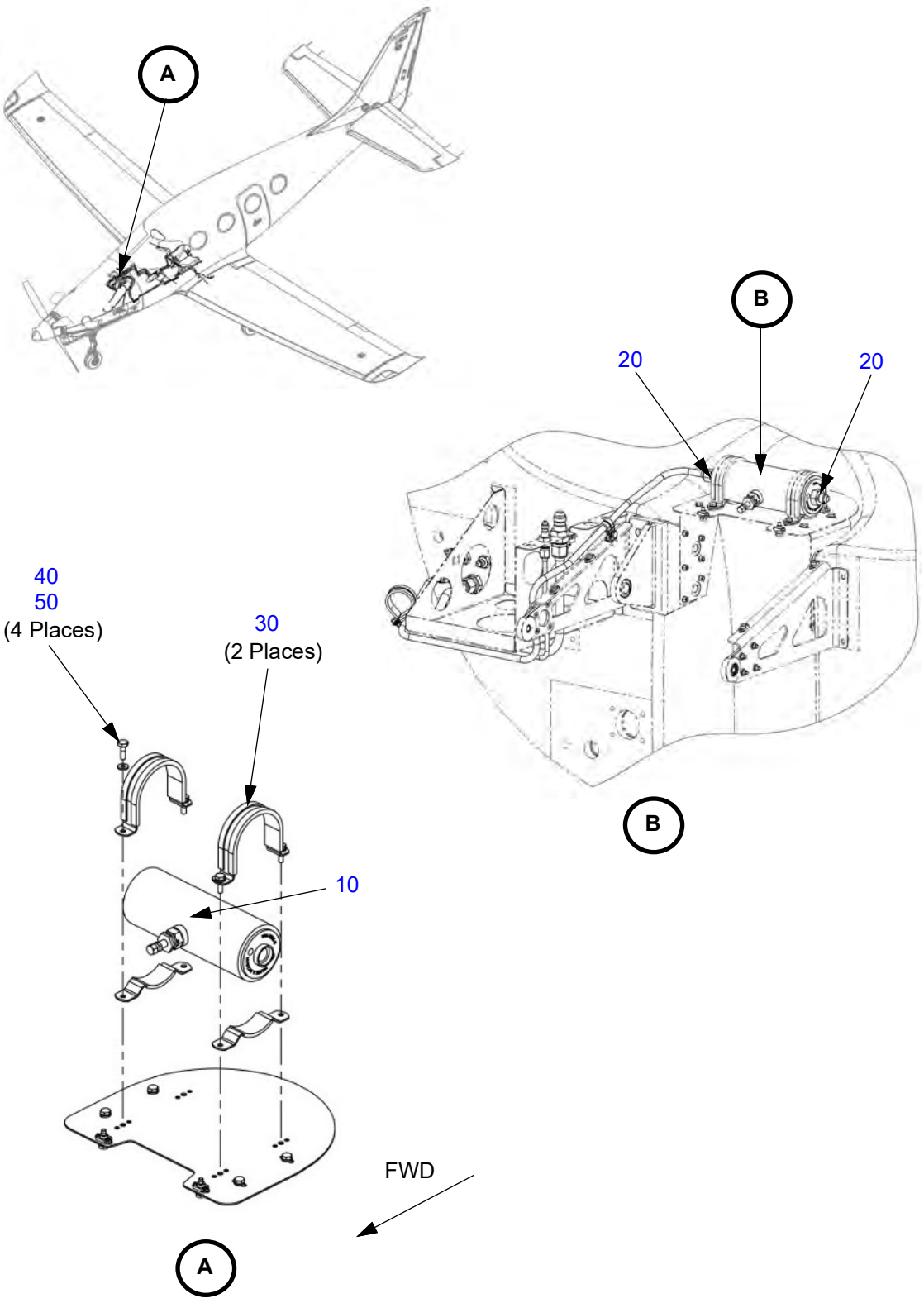

Table 29-10.4: Hydraulic Suppressor

Figure Item Number	Part Number	Part Name	Effectivity Code	Amount in Assy.
10	PK99005371	Suppressor, Hyd Shock/noise/vib/pulsation, 3/4-16 St Thd, 3000 PSI	K003 and On	1
20	6-8 F5OX-SS	Parker Fitting: Reducer, 3/4 SAE-ORB To 3/8 37° Flare JIC	K003 and On	2
30	M85449/1-40	Clamp Assy, Saddle-type, Cushioned, 2.500 Dia	K003 and On	2
40	AN3-5A	Bolt, 10-32 x 21/32" Undrilled	K003 and On	4
50	NAS1149C0363R	Washer, Flat, CRES #10 x .063	K003 and On	4

Figure 29-10.5: Hydraulic Pump Lines, Firewall Forward

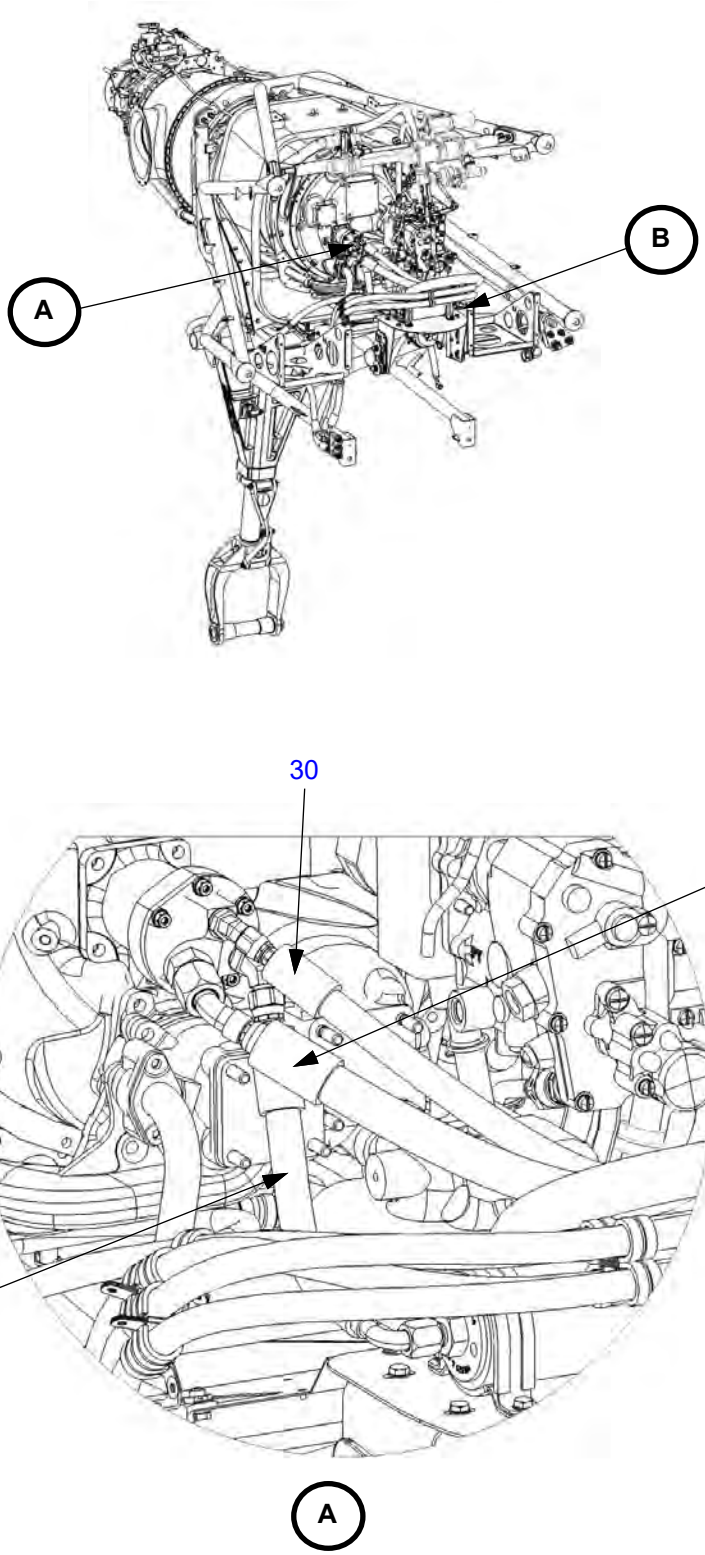

Figure 29-10.5: Hydraulic Pump Lines, Firewall Forward (Continued)

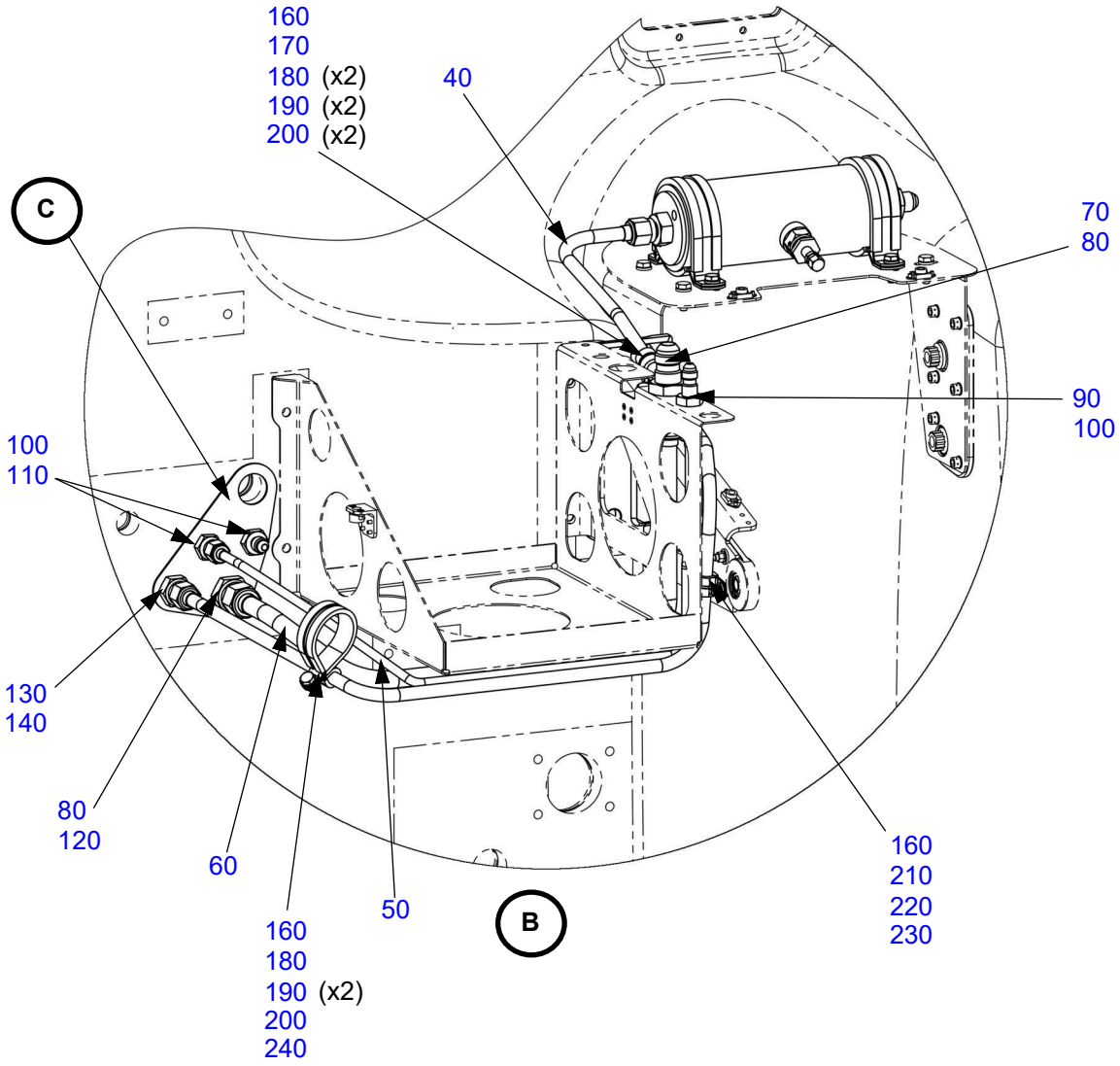

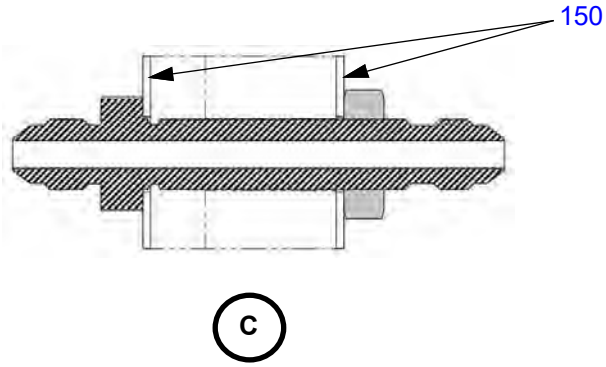

Table 29-10.5: Hydraulic Pump Lines, Firewall Forward

Figure Item Number	Part Number	Part Name	Effectivity Code	Amount in Assy.
10	AE1010966G0101	Hose Assy, Int Fire Sleeve, -6 x 10.13", Straight To 90 Deg Fittings	K003 and On	1
*	3164J005-6CR-0101, 3164F005-6CR-0101, M66000206-0101, 66000206-0101S, M37000206-0101, 37000206-0101S	-	-	-
20	AE4704H0203-120	Hose Assy, Int Fire Sleeve, -8 x 20.38", 45 To 90 Deg Fittings	K003 and On	1
*	171J062E0203C120			
30	AE2463532E0190	Hose Assy, Int Fire Sleeve, -4 x 19.0", Straight To 90 Deg Fittings	K003 and On	1
*	171J005-4CR-0190			
40	AK29120100	Tube Assembly, Pressure, Firewall Forward	K003 and On	1
50	AK29120200	Tube Assembly, Case Drain, Firewall Forward	K003 and On	1
60	AK29120300	Tube Assembly, Suction, Firewall Forward	K003 and On	1
70	AS5406J08	Fitting, Union, Tube, .375 Bulkhead, 1/2" OD Tube	K003 and On	1
80	AS5178J08	Nut, Fitting, CRES, Ø.500 Tube x .750-16 Thread	K003 and On	1
90	AS5406J04	Fitting, Union, Tube, .375 Bulkhead, 1/4" OD Tube	K003 and On	1
100	AS5178J04	Nut, Fitting, CRES, Ø.250 Tube x .438-20 Thread	K003 and On	3
110	PK29000004	Fitting, Union, Tube, 1.25 Bulkhead, 1/4" OD Tube	K003 and On	2
120	PK29000008	Fitting, Union, Tube, 1.25 Bulkhead, 1/2" OD Tube	K003 and On	1

Figure Item Number	Part Number	Part Name	Effectivity Code	Amount in Assy.
130	PK29000006	Fitting, Union, Tube, 1.25 Bulkhead, 3/8" OD Tube	K003 and On	1
140	AS5178J06	Nut, Fitting, CRES, Ø.375 Tube x .563-18 Thread	K003 and On	1
150	PK29120001	Plate, Firewall, Hydraulic Power	K003 and On	2
160	AS21919WCJ06	Clamp, Loop Type, Cushioned, CRES, Ø .375	K003 and On	3
170	AN743-12	Bracket, Support Clamp, Al, .204	K003 and On	1
180	AN3-3A	Bolt, 10-32 x 15/32" Undrilled	K003 and On	3
190	NAS1149F0332P	Washer, Flat #10 x .032	K003 and On	4
200	MS21042L3	Nut, Self-locking, 450°, Reduced #10-32	K003 and On	3
210	NAS1149F0363P	Washer, Flat #10 x .063	K003 and On	1
220	MS24694-S53	Screw, Machine, C'sunk Ø .190 x 23/32	K003 and On	1
230	MS21043-3	Nut, Self-locking, 800°, Reduced #10-32	K003 and On	1
240	AS21919WCJ24	Clamp, Loop Type, Cushioned, CRES, Ø 1.500	K003 and On	1

*Alternate part numbers.

Figure 29-10.6: Hydraulic Landing Gear Lines, Firewall Forward

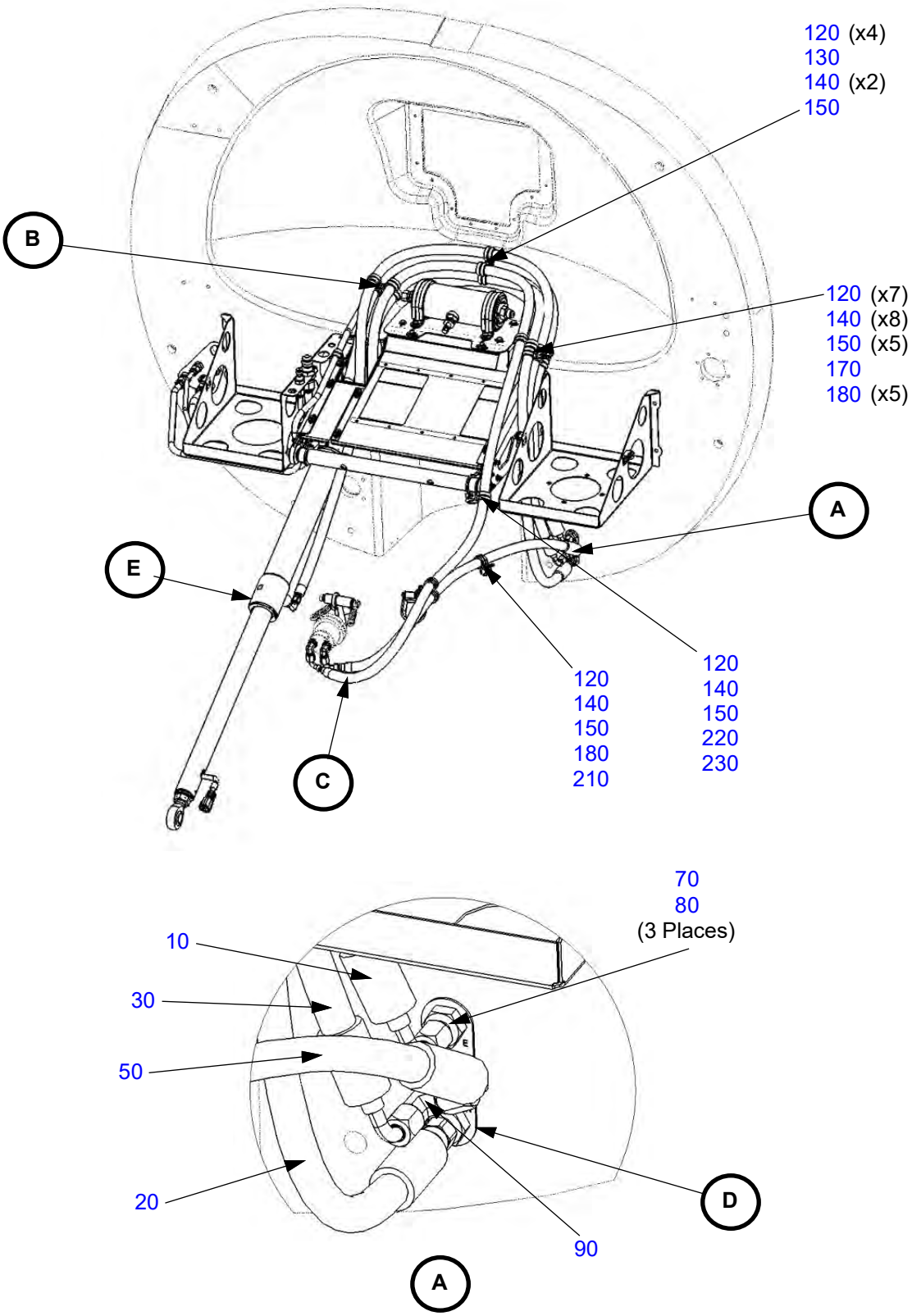

Figure 29-10.6: Hydraulic Landing Gear Lines, Firewall Forward (Continued)

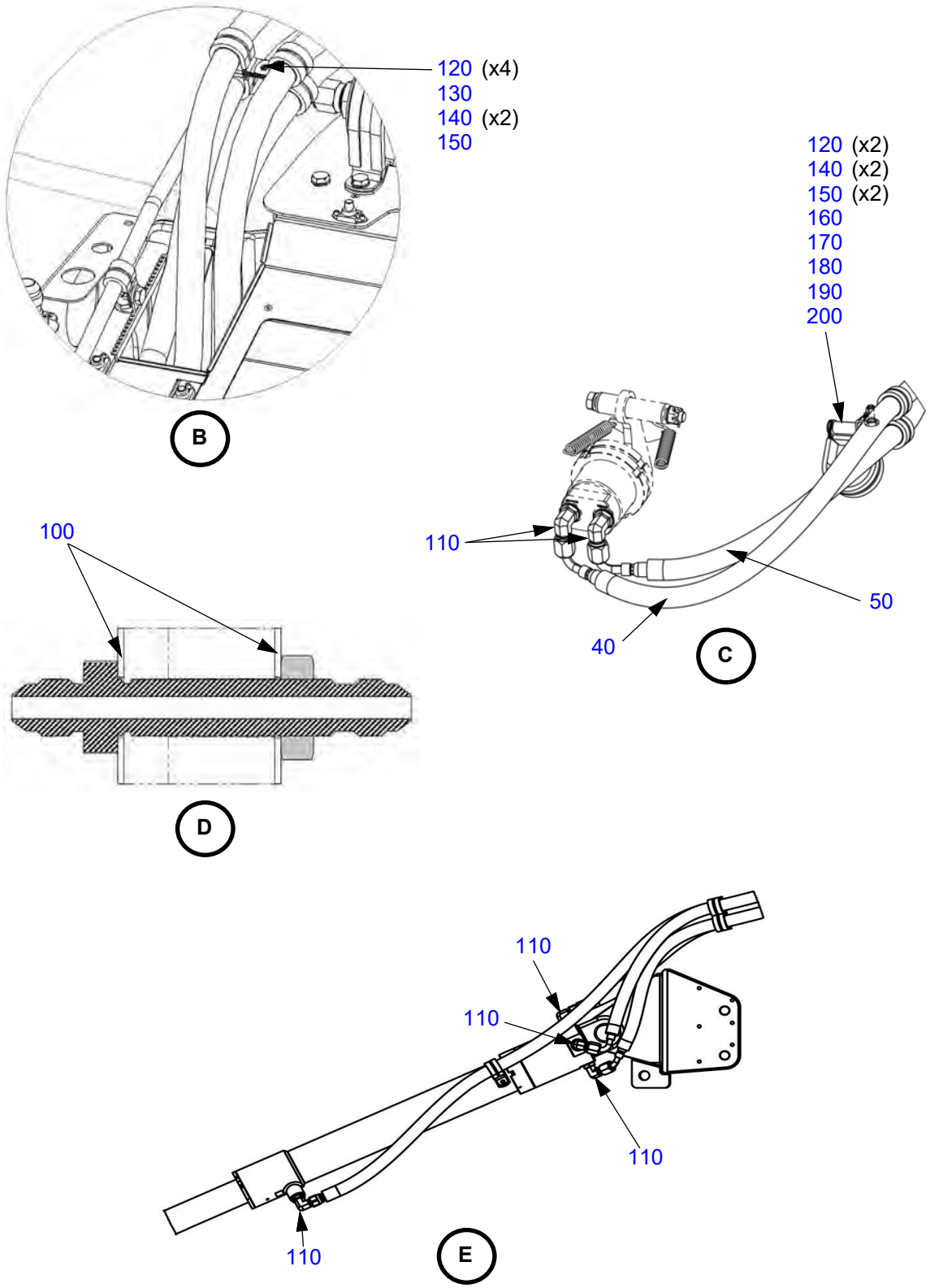

Table 29-10.6: Hydraulic Landing Gear Lines, Firewall Forward

Figure Item Number	Part Number	Part Name	Effectivity Code	Amount in Assy.
10	AE2463532E0484 171J005-4CR-0484	Eaton/parker: Hose Assy, Int Fire Sleeve, -4 x 48.5", Straight To 90 Deg Fittings	K003 and On	1
20	AE2463531E0540 171J003-4CR-0540	Eaton/parker: Hose Assy, Int Fire Sleeve, -4 x 54.0", Straight To 45 Deg	K003 and On	1
30	AE2463532E0674 171J005-4cr-0674	Eaton/parker: Hose Assy, Int Fire Sleeve, -4 x 67.5", Straight To 90 Deg	K003 and On	1
40	AE4705E0690-000 171J115B0690C000	Eaton/parker: Hose Assy, Int Fire Sleeve, -4 x 69.0", 90 To 90 Deg	K003 and On	1
60	AE4705E0362-070 171J115B0362C070	Eaton/parker: Hose Assy, Int Fire Sleeve, -4 x 36.25", 90 Deg Fittings	K003 and On	1
70	PK29000004	Fitting, Union, Tube, 1.25 Bulkhead, 1/4" OD Tube	K003 and On	3
80	AS5178J04	Nut, Fitting, CRES, Ø.250 Tube x .438-20 Thread	K003 and On	3
90	4 R6X-SS	Parker: 37 Deg Swivel Run Tee	K003 and On	1
100	PK29110001	Plate, Firewall, Actuator Hoses	K003 and On	2
110	4 C5OX-SS	Parker: Fitting, Elbow, SAE-ORB / 37 Deg Flare	K003 and On	6
120	AS21919WCJ11	Clamp, Loop Type, Cushioned, CRES, Ø .688	K003 and On	19
130	AN3-4A	Bolt, 10-32 x 17/32" Undrilled	K003 and On	2
140	NAS1149F0332P	Washer, Flat #10 x .032	K003 and On	18
150	MS21042L3	Nut, Self-locking, 450°, Reduced #10-32	K003 and On	7
160	AS21919WCJ24	Clamp, Loop Type, Cushioned, CRES, Ø 1.500	K003 and On	1
170	AN743-C12	Bracket, Support Clamp	K003 and On	2
180	AN3-3A	Bolt, 10-32 x 15/32" Lg, Undrilled	K003 and On	7
190	AN3-12A	Bolt, 10-32 x 1-9/32" Undrilled	K003 and On	1

Figure Item Number	Part Number	Part Name	Effectivity Code	Amount in Assy.
200	NAS43HT4-52N	Spacer, Aluminum .277 ID x .375 OD x .813	K003 and On	1
210	AS21919WCJ06	Clamp, Loop Type, Cushioned, CRES, Ø .375	K003 and On	1
220	AS21919WCJ18	Clamp, Loop Type, Cushioned, CRES, Ø 1.125	K003 and On	1
230	AN3-4A	Bolt, 10-32 x 17/32" Undrilled	K003 and On	1

Figure 29-10.7: Hydraulic Reservoir Pneumatic Line, Firewall Forward

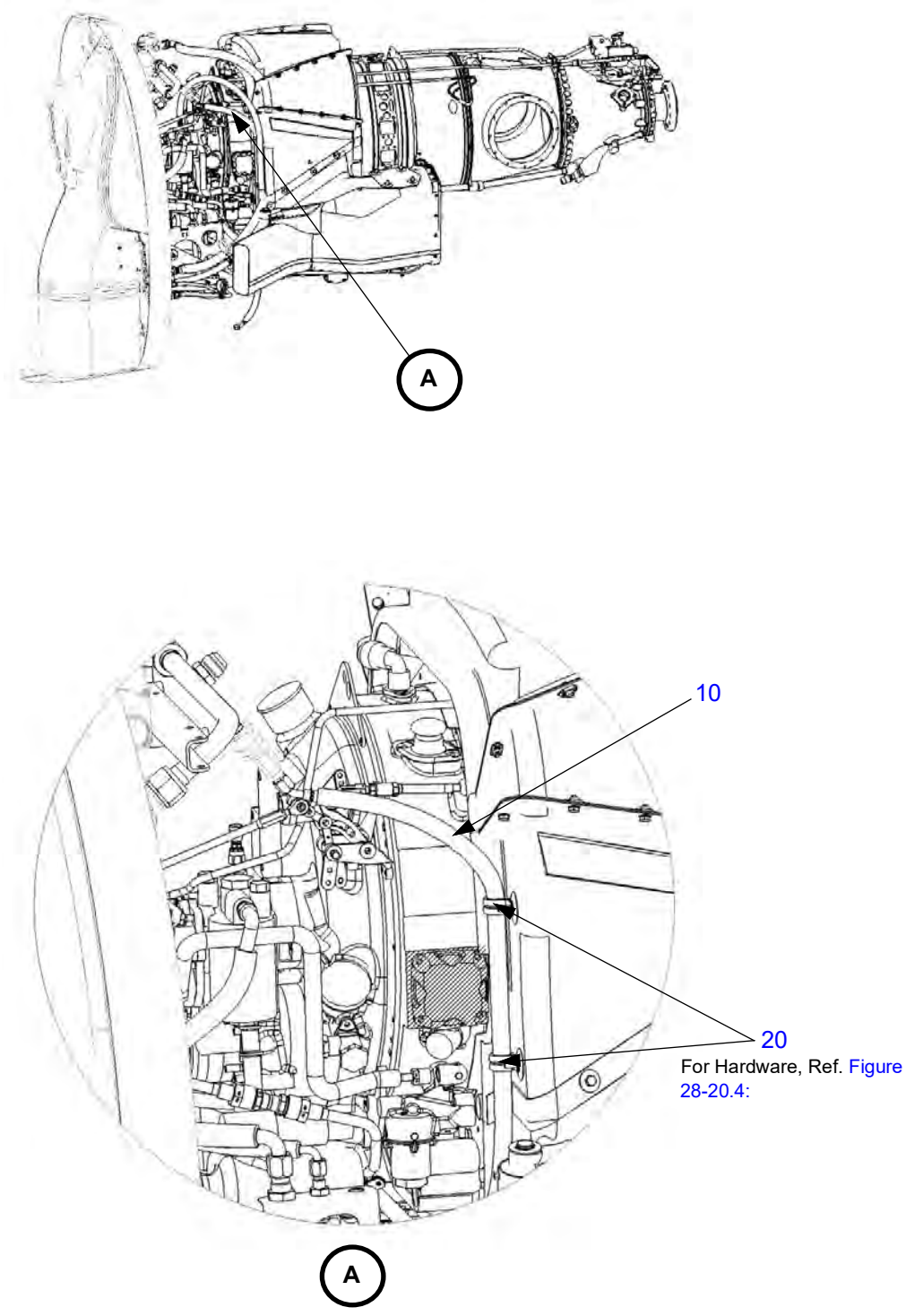

Table 29-10.7: Hydraulic Reservoir Pneumatic Line, Firewall Forward

Figure Item Number	Part Number	Part Name	Effectivity Code	Amount in Assy.
10	AE2463531E0384 171J003-4CR-0384	Eaton/parker: Hose Assy, Int Fire Sleeve, -4 x 38.5", Straight To 45 Deg Fittings	K003 and On	1
20	AS21919WCJ11	Clamp, Loop Type, Cushioned, CRES, Ø .688	K003 and On	2

Figure 29-10.8: Hydraulic Lines, Firewall Aft

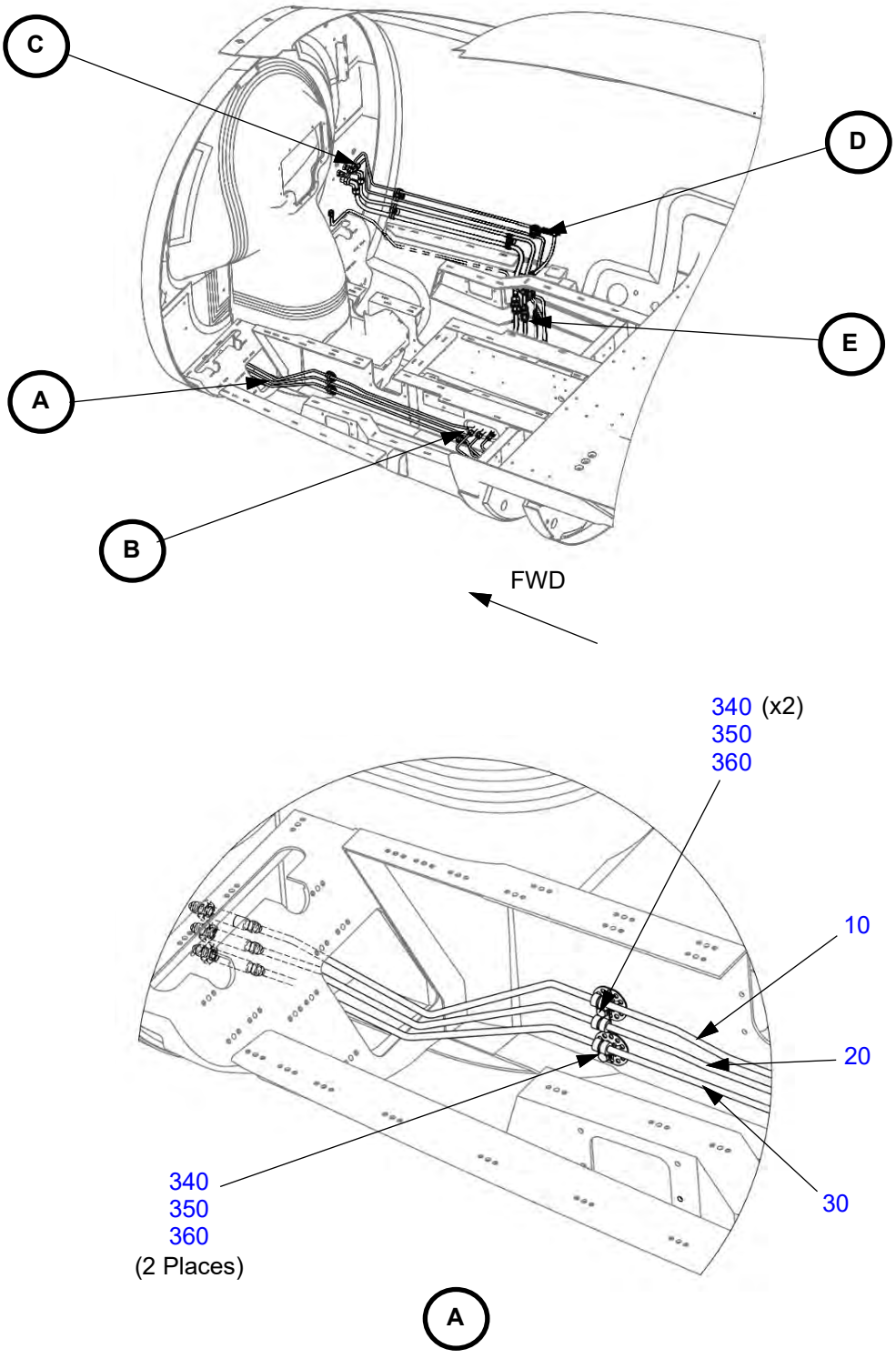

Figure 29-10.8: Hydraulic Lines, Firewall Aft (Continued)

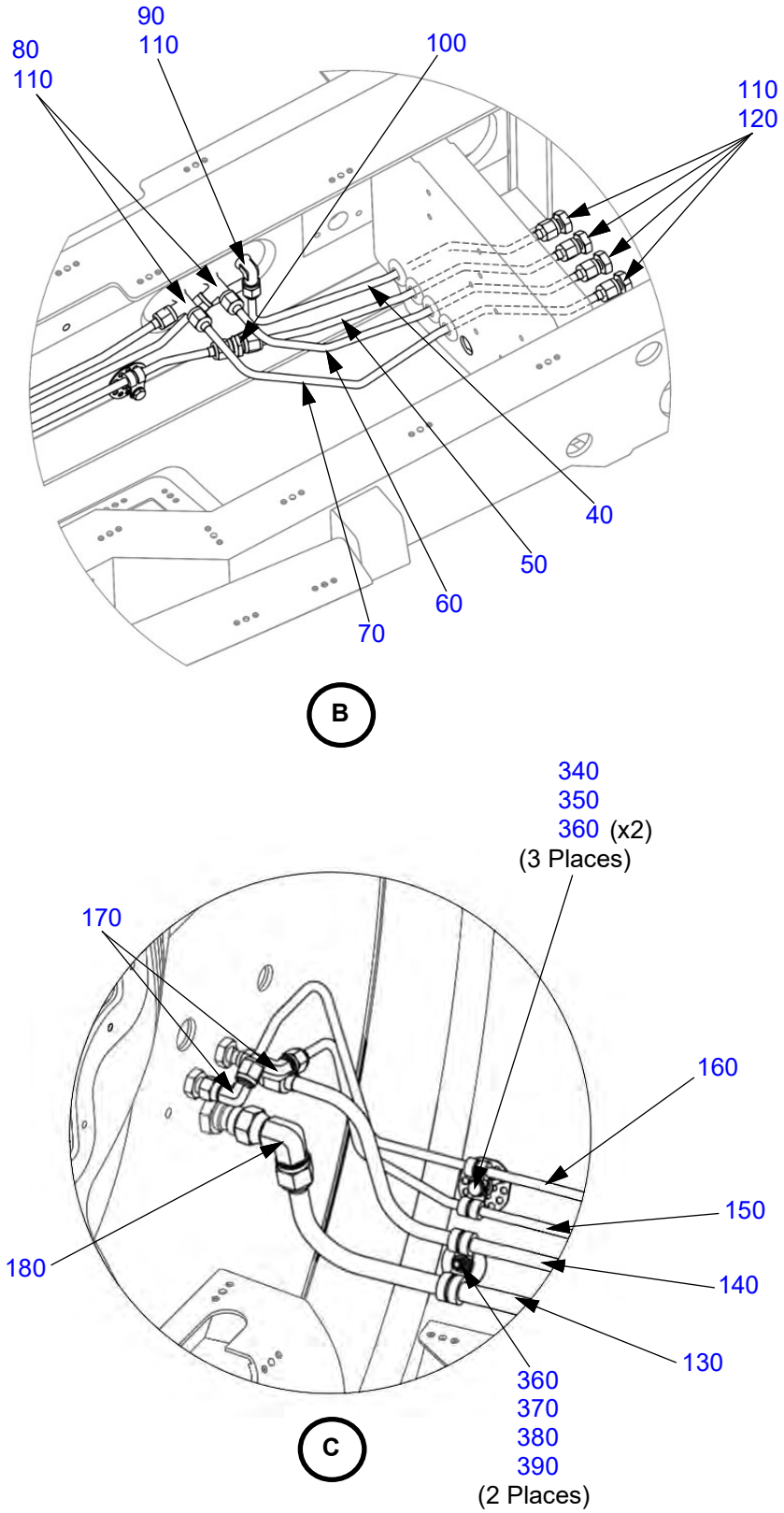

Figure 29-10.8: Hydraulic Lines, Firewall Aft (Continued)

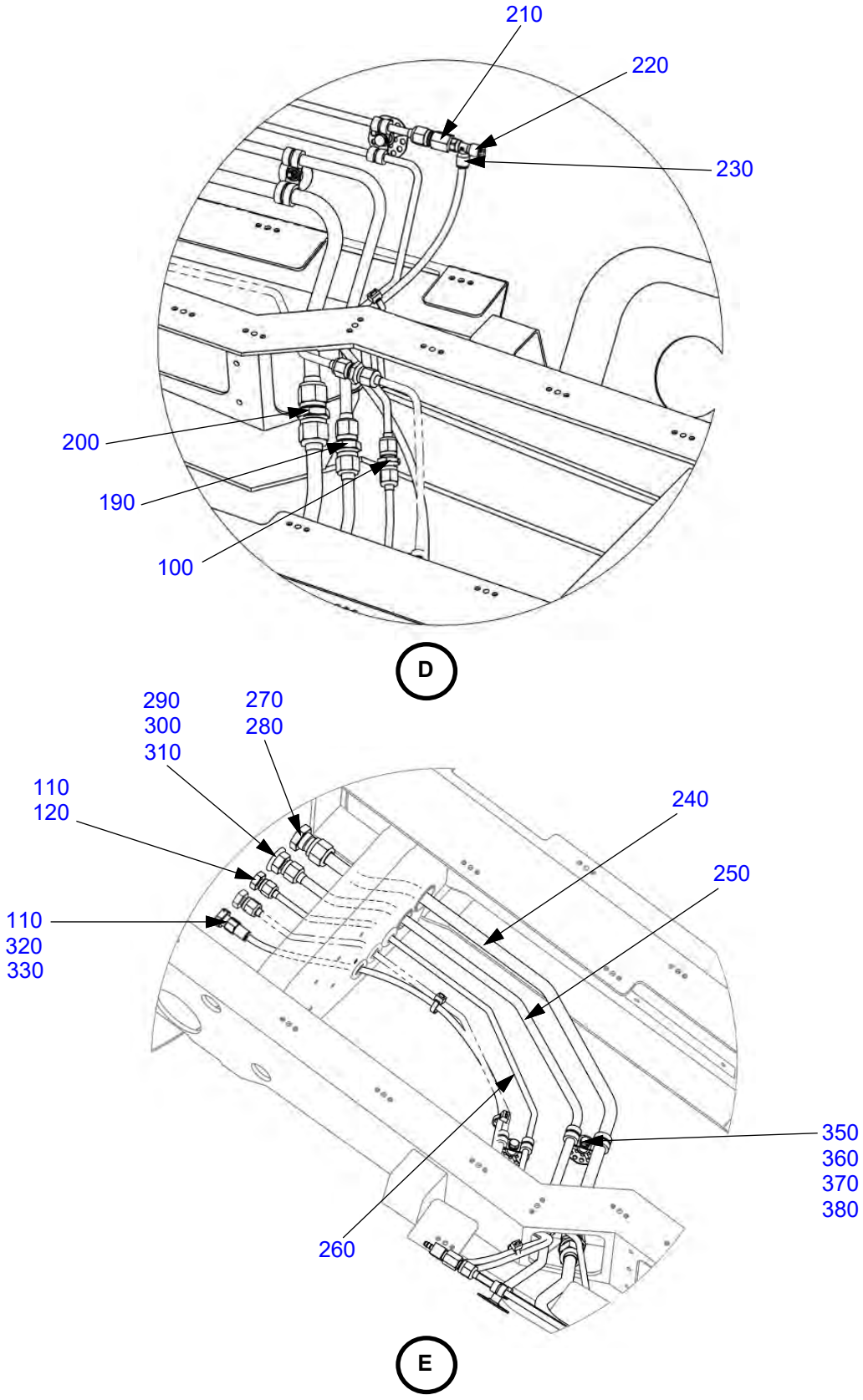

Table 29-10.8: Hydraulic Lines, Firewall Aft

Figure Item Number	Part Number	Part Name	Effectivity Code	Amount in Assy.
10	AK29170100	Tube Assembly, Blowdown, Fwd Floor	K003 and On	1
20	AK29170200	Tube Assembly, Retract, Fwd Floor	K003 and On	1
30	AK29170300	Tube Assembly, Extend, Fwd Floor	K003 and On	1
40	AK29170400	Tube Assembly, Return, Floor Rib To Wing Saddle	K003 and On	1
50	AK29170500	Tube Assembly, Extend, Floor Aft	K003 and On	1
60	AK29170600	Tube Assembly, Retract, Floor Tee To Sad-dle	K003 and On	1
70	AK29170700	Tube Assembly, Blowdown, Floor Tee To Saddle	K003 and On	1
80	AS1033J040404	Fitting, Tee, Bulkhead On Run, Flared, 1/4" OD Tube	K003 and On	2
90	AS1038J0404	Fitting, Elbow, 90 Deg, Bulkhead, Flared, 1/4" OD Tube	K003 and On	1
100	AN815-4J	Union, Flared Tube	K003 and On	2
110	AS5178J04	Nut, Fitting, CRES, Ø.250 Tube x .438-20 Thread	K003 and On	9
120	AS5406J04	Fitting, Union, Tube, .375 Bulkhead, 1/4" OD Tube	K003 and On	4
130	AK29172100	Tube Assembly, Suction, Firewall To Rib	K003 and On	1
140	AK29172300	Tube Assembly, Pressure, Firewall To Rib	K003 and On	1
150	AK29172500	Tube Assembly, Case Drain, Firewall To Rib	K003 and On	1
160	AK29172700	Tube Assembly, Bleed Air, Firewall To Tee	K003 and On	1
170	4 C6X-SS	Parker: Fitting, 90 Deg Swivel, Male - Female Flare, 1/4" OD Tube	K003 and On	2
180	8 C6X-SS	Parker: Fitting, 90 Deg Swivel, Male - Female Flare, 1/2" OD Tube	K003 and On	1

Figure Item Number	Part Number	Part Name	Effectivity Code	Amount in Assy.
190	AN815-6J	Union, Flared Tube	K003 and On	1
200	AN815-8J	Union, Flared Tube	K003 and On	1
210	4 GTX-SS	Parker: Fitting, 1/4 JIC To Female 1/8 NPT	K003 and On	1
220	3103 56 11	Parker: Male Run Tee, 1/8 NPT, 1/4 Tube	K003 and On	1
230	HU-4-RED-0100	Parker: Tubing, Polyurethane, 1/4 OD	K003 and On	A/R
240	AK29172200	Tube Assembly, Suction, Rib To Saddle	K003 and On	1
250	AK29172400	Tube Assembly, Pressure, Rib To Saddle	K003 and On	1
260	AK29172600	Tube Assembly, Case Drain, Rib To Saddle	K003 and On	
270	AS5406J08	Fitting, Union, Tube, .375 Bulkhead, 1/2" OD Tube	K003 and On	1
280	AS5178J08	Nut, Fitting, CRES, Ø.500 Tube x .750-16 Thread	K003 and On	1
290	AS5406J06	Fitting, Union, Tube, .375 Bulkhead, 3/8" OD Tube	K003 and On	1
300	NAS1149F0932P	Washer, Flat 9/16 x .032	K003 and On	1
310	MS35489-46	Grommet, .625 ID x 1.125 OD x .125 Groove	K003 and On	1
320	4 WFTX-SS	Parker: Male Bulkhead Connector, 37 Deg Flare/NPTF	K003 and On	1
330	3103 56 11	Parker: Male Run Tee, 1/8 Npt, 1/4 Tube	K003 and On	1
340	AS21919WDG04	Clamp, Loop Type, Cushioned Support	K003 and On	11
350	AN3-3A	Bolt, 10-32 x 15/32" Undrilled	K003 and On	6
360	NAS1149F0332P	Washer, Flat #10 x .032	K003 and On	8
370	AS21919WDG06	Clamp, Loop Type, Cushioned Support	K003 and On	2
380	AS21919WDG08	Clamp, Loop Type, Cushioned Support	K003 and On	2
390	MS21042L3	Nut, Self-locking, 450°, Reduced #10-32	K003 and On	2

Figure 29-10.9: Hydraulic Lines, Wing Saddle

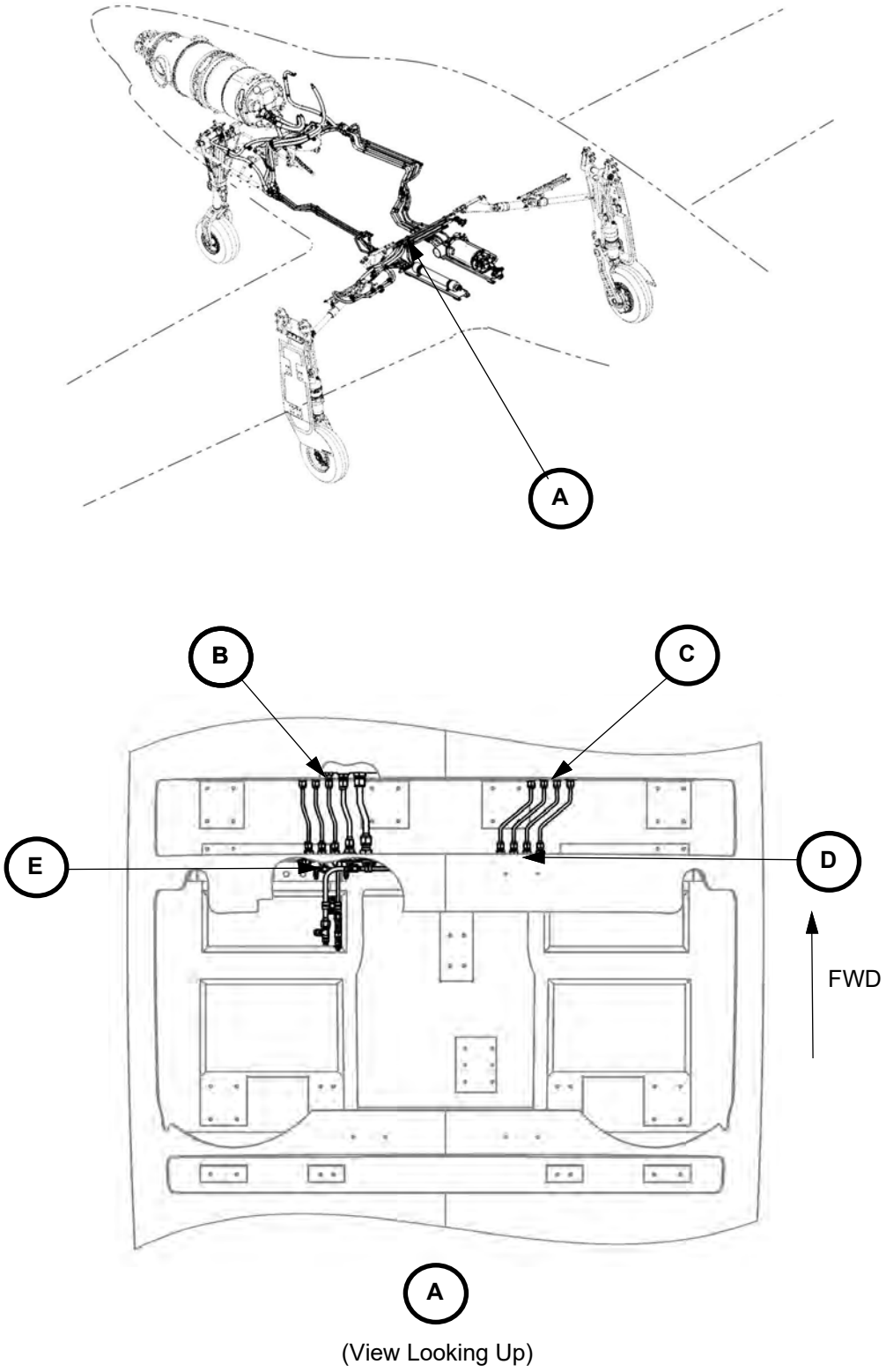

Figure 29-10.9: Hydraulic Lines, Wing Saddle (Continued)

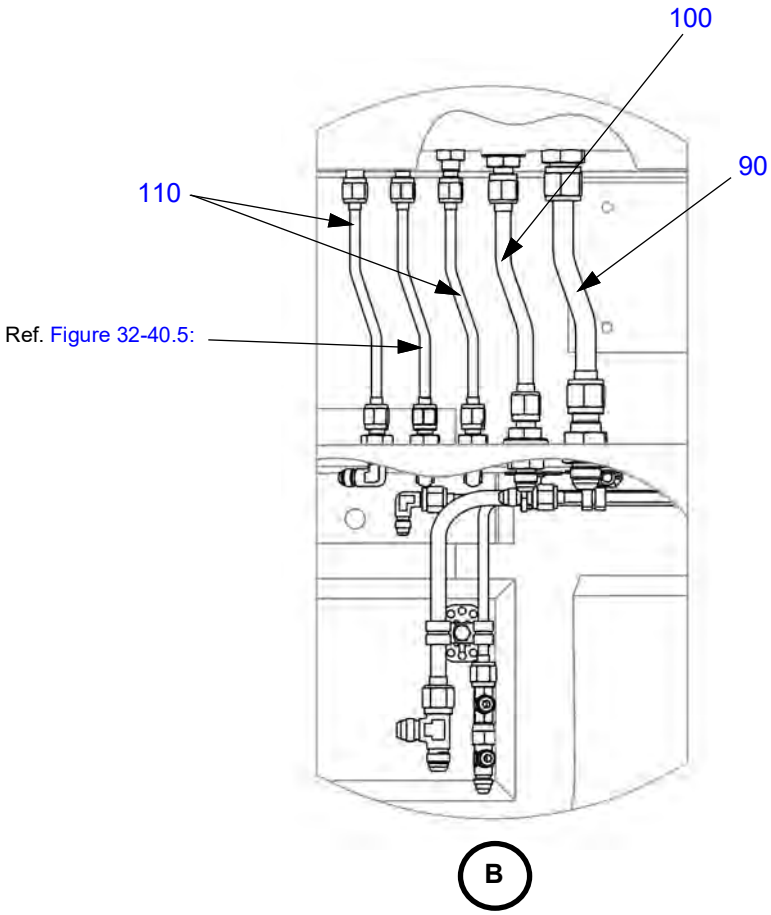

Figure 29-10.9: Hydraulic Lines, Wing Saddle (Continued)

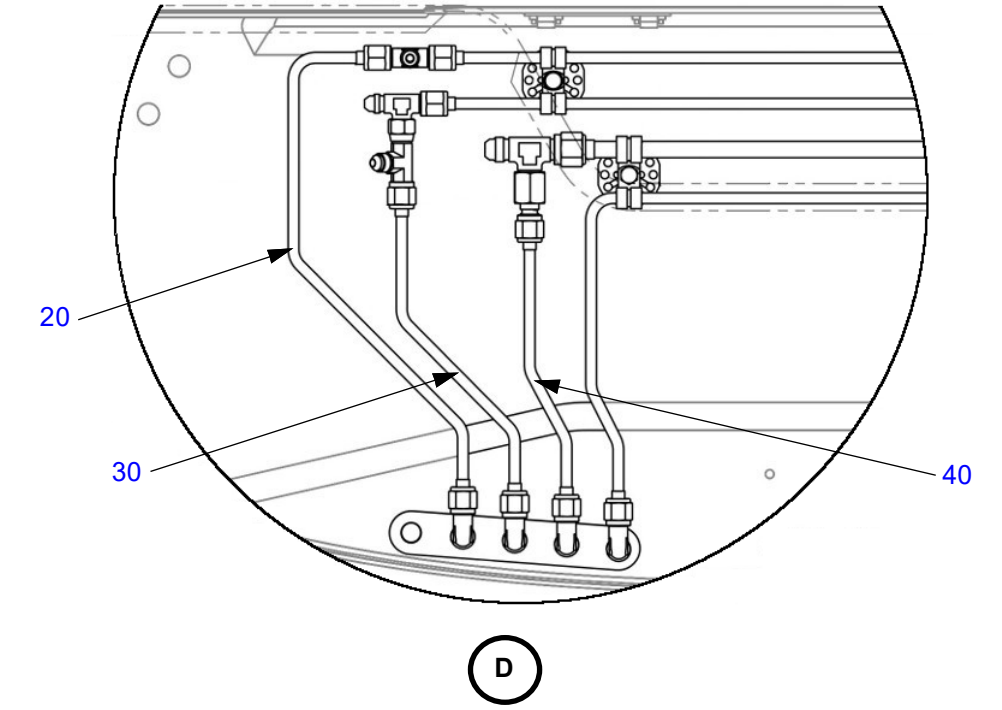

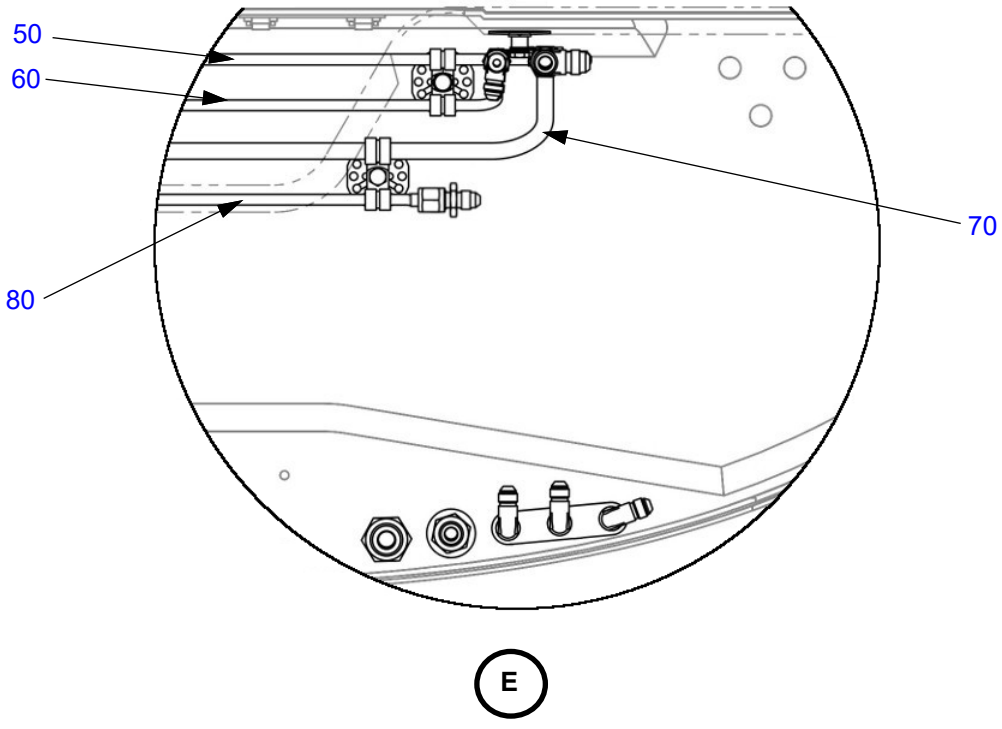

Table 29-10.9: Hydraulic Lines, Wing Saddle

Figure Item Number	Part Number	Part Name	Effectivity Code	Amount in Assy.
10	AK29171000	Tube Assembly, Spar Bay, Pilot Side	K003 and On	4
20	AK29171200	Tube Assembly, Blow Down, Wing Saddle To Tee	K003 and On	1
30	AK29171300	Tube Assembly, Retract, Saddle To Tee	K003 and On	1
40	AK29171400	Tube Assembly, Extend, Saddle To Tee	K003 and On	1
50	AK29171500	Tube Assembly, Blowdown, Saddle Tee To Elbow	K003 and On	1
60	AK29171600	Tube Assembly, Retract, Saddle Tee To Tee	K003 and On	1
70	AK29171700	Tube Assembly, Extend, Saddle Tee To Tee	K003 and On	1
80	AK29171800	Tube Assembly, Return, Saddle To Reser-voir	K003 and On	1
90	AK29173000	Tube Assembly, Suction, Spar	K003 and On	1
100	AK29173100	Tube Assembly, Pressure, Spar Bay	K003 and On	1
110	AK29173200	Tube Assembly, Spar Bay, Co-pilot Side	K003 and On	2

Figure 29-10.10: Hydraulic Lines, Main Landing Gear and Reservoir

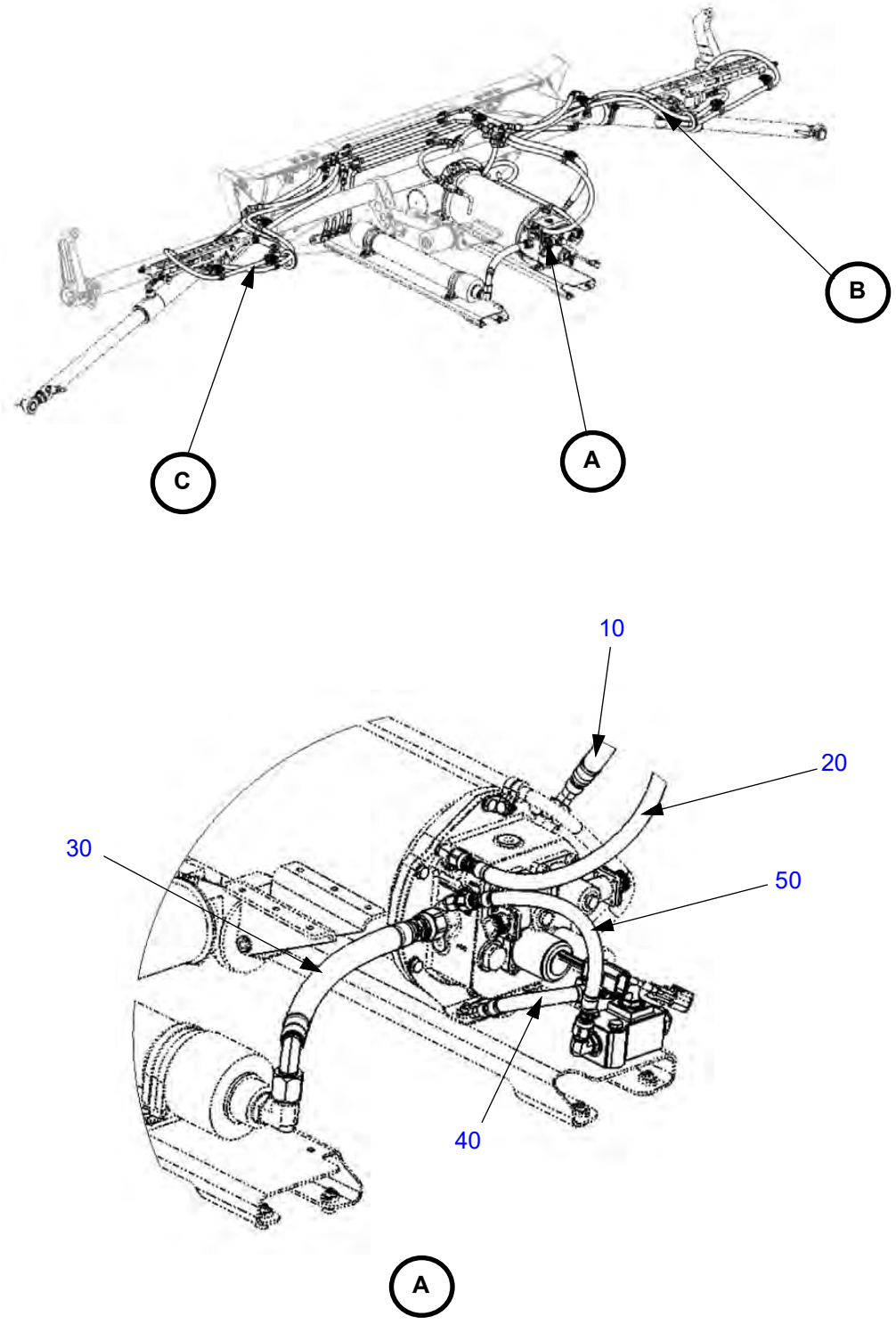

Figure 29-10.10: Hydraulic Lines, Main Landing Gear and Reservoir (Continued)

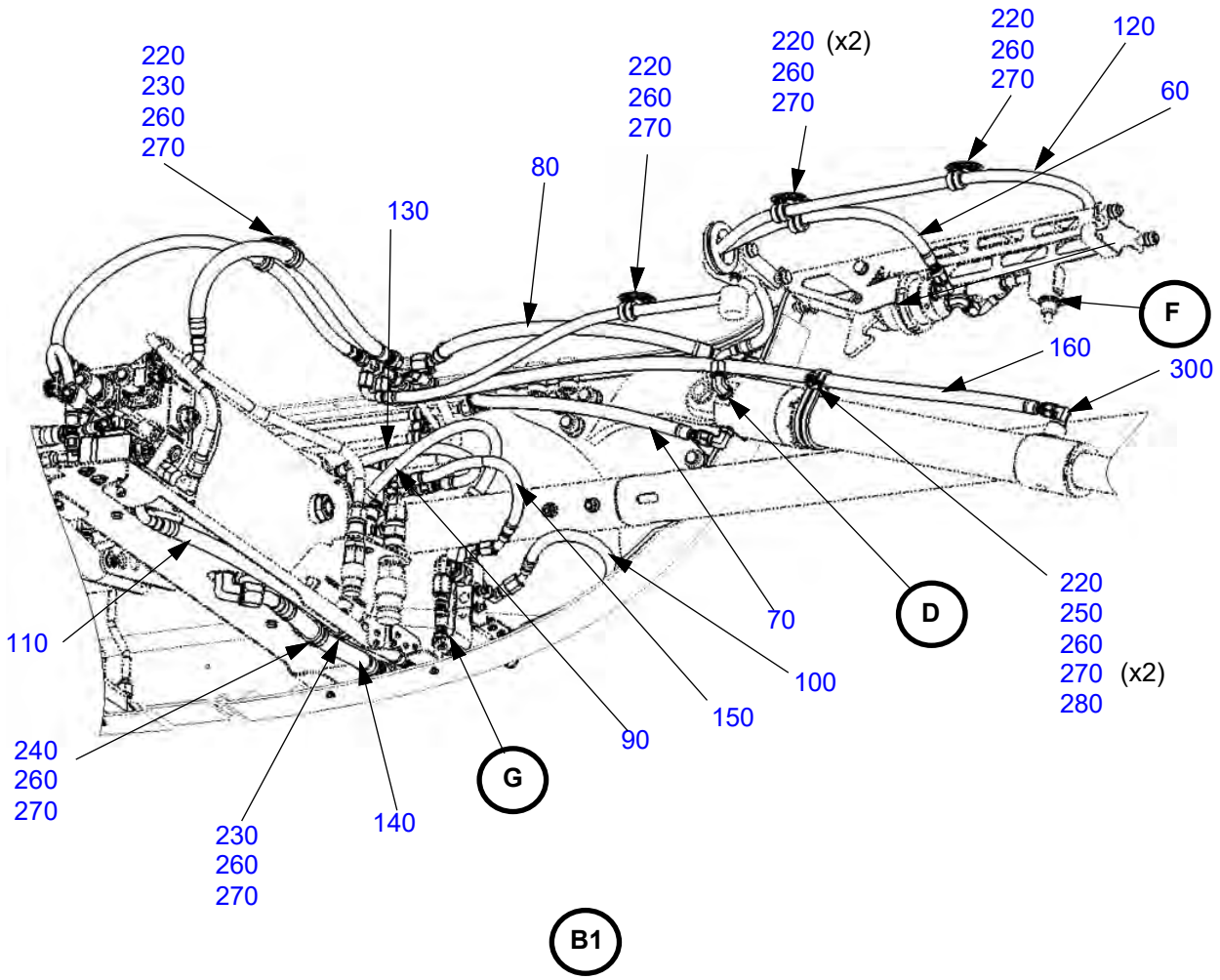

(SN: K003 - K018)
(View Looking Up and Forward)

Figure 29-10.10: Hydraulic Lines, Main Landing Gear and Reservoir (Continued)

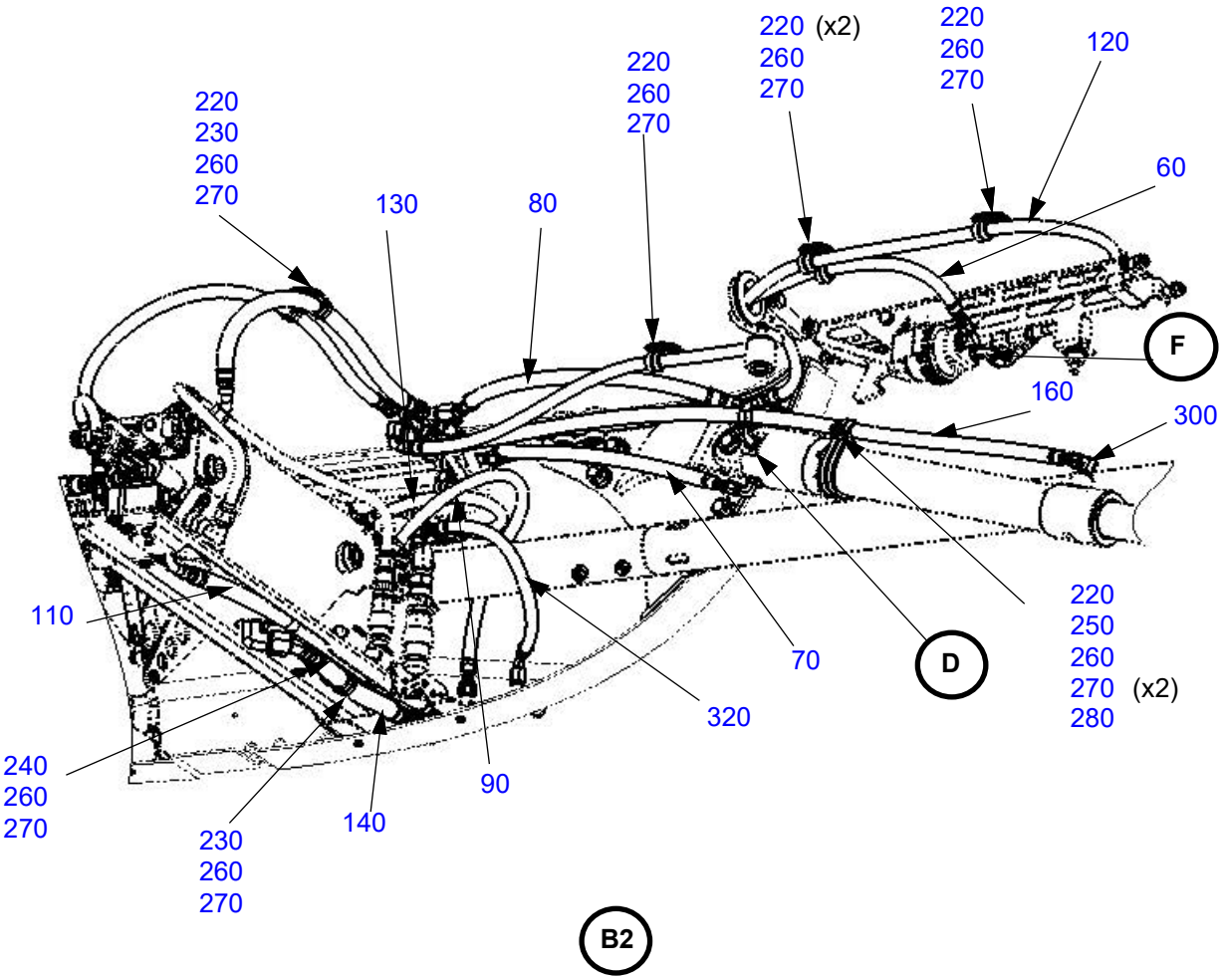

(SN: K019 and On)
(View Looking Up and Forward)

Figure 29-10.10: Hydraulic Lines, Main Landing Gear and Reservoir (Continued)

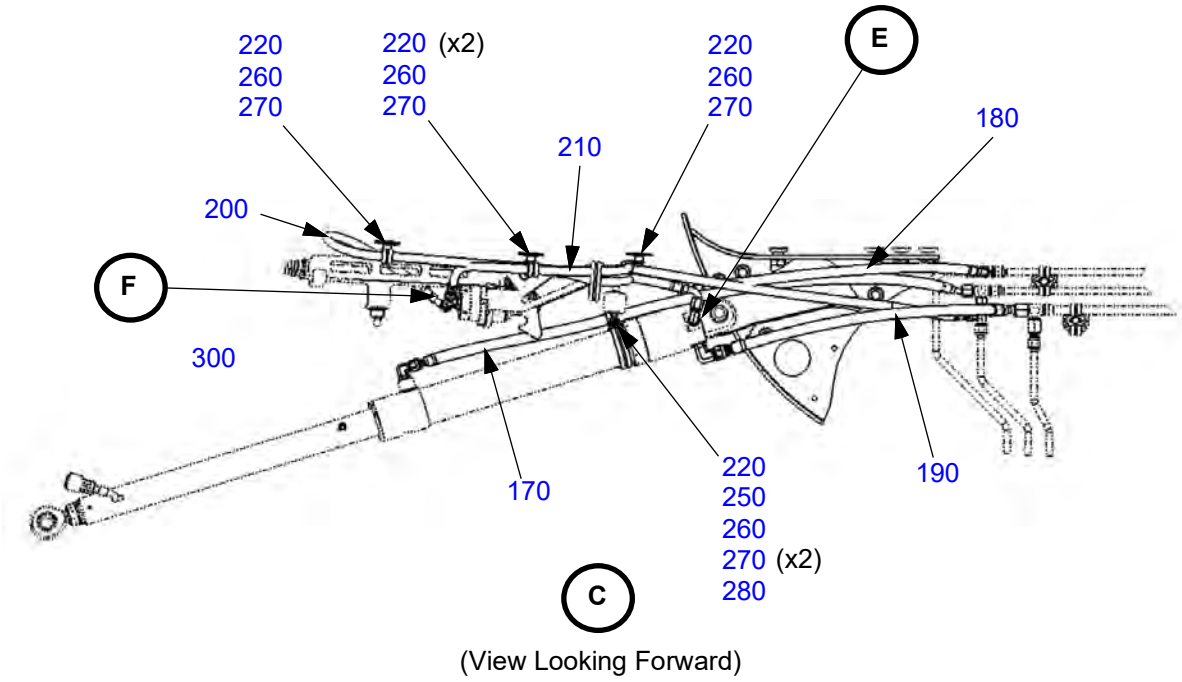

Figure 29-10.10: Hydraulic Lines, Main Landing Gear and Reservoir (Continued)

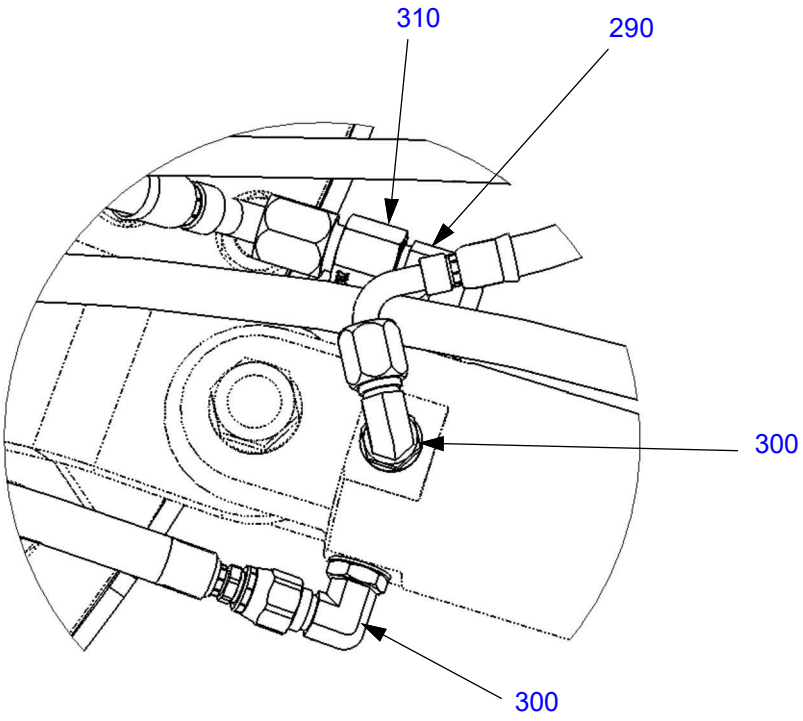

D

(View Looking Forward)

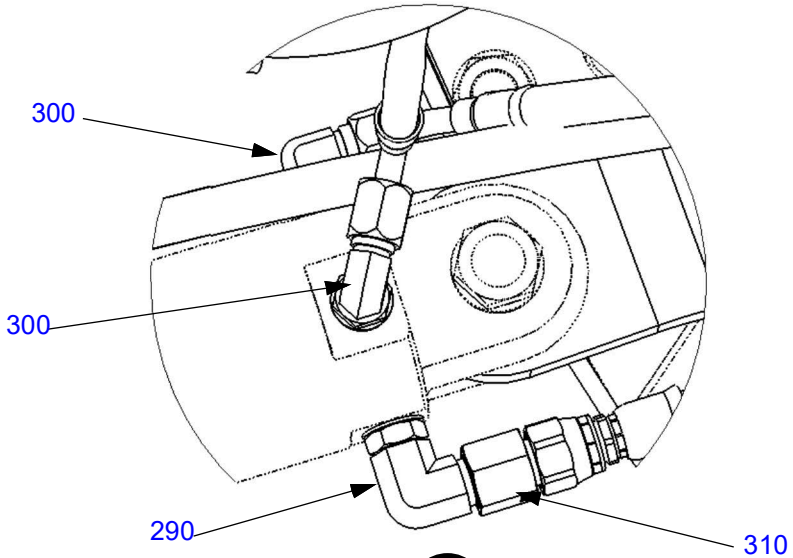

E

(View Looking Forward)

Figure 29-10.10: Hydraulic Lines, Main Landing Gear and Reservoir (Continued)

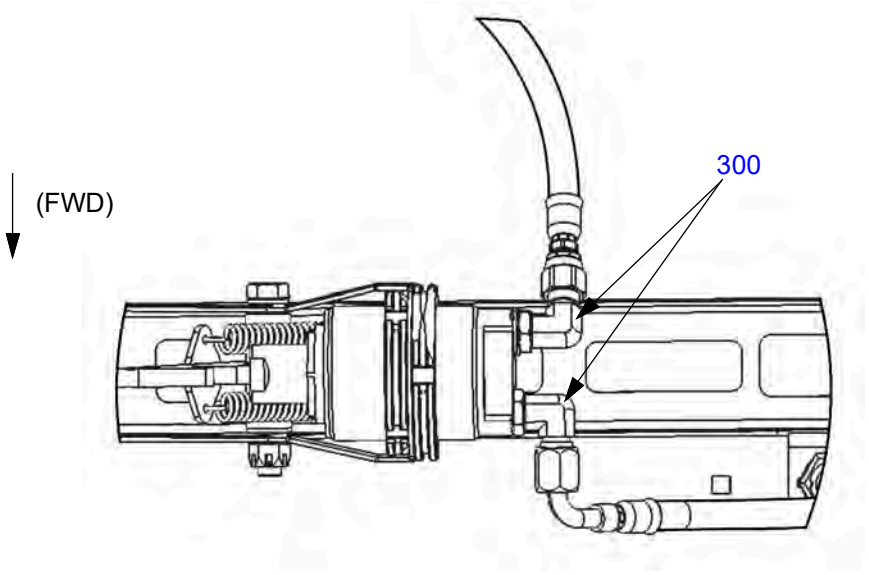

F

(Right side shown, left side opposite.)

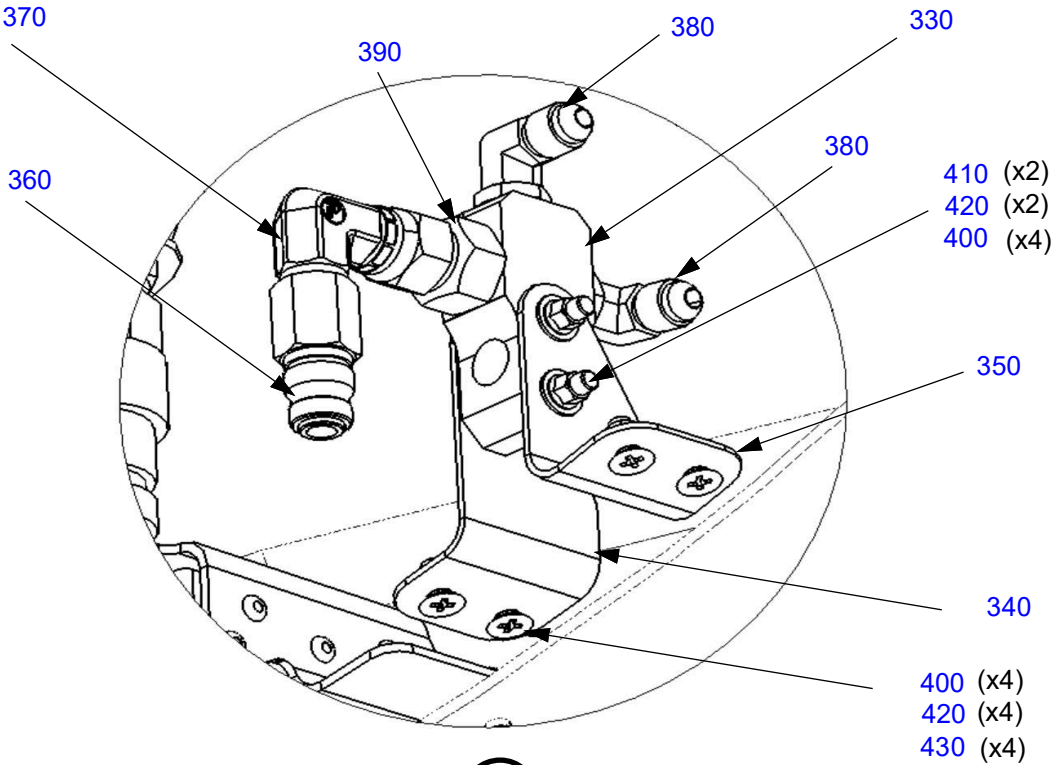

G

(SN: K003 - K018)

Table 29-10.10: Hydraulic Lines, Main Landing Gear and Reservoir

Figure Item Number	Part Number	Part Name	Effectivity Code	Amount in Assy.
10	AE2463510G0190 171K003-6CR-0190	Eaton/Parker: Hose Assy, -6 x 19.0" Straight To 45 Deg, Integral Chafe Sleeve	K003 and On	1
20	AE2463509E0280 171K001-4CR-0280	Eaton/Parker: Hose Assy, -4 x 28.0", Straight Fittings, Integral Chafe Sleeve	K003 and On	1
30	AE2463511H0110 171K005-8CR-0110	Eaton/Parker: Hose Assy, -8 x 11.0", Straight To 90 Deg, Integral Chafe Sleeve	K003 and On	1
40	AE2463511E0053 171K005-4CR-0053	Eaton/Parker: Hose Assy, -4 x 5.375", Straight To 90 Deg, Integral Chafe Sleeve	K003 and On	1
50	AE2463509E0080 171K001-4CR-0080	Eaton/Parker: Hose Assy, -4 x 8.0", Straight Fittings, Integral Chafe Sleeve	K003 and On	1
60	AE2463511E0260 171K005-4CR-0260	Eaton/Parker: Hose Assy, -4 x 26.0", Straight To 90 Deg, Integral Chafe Sleeve	K003 and On	1
70	AE2463510E0154 171K003-4CR-0154	Eaton/Parker: Hose Assy, -4 x 15.5", Straight To 45 Deg, Integral Chafe Sleeve	K003 and On	1
80	AE4695G0155-345 171K060D0155C345	Eaton/Parker: Hose Assy, -6 x 15.5", 45 Deg Fittings, Integral Chafe Sleeve	K003 and On	1
90	AE2463510E0190 171K003-4CR-0190	Eaton/Parker: Hose Assy, -4 x 19.0", Straight To 45 Deg, Integral Chafe Sleeve	K003 and On	1
110	AE2463511G0200 171K005-6CR-0200	Eaton/Parker: Hose Assy, -6 x 20.0 ", Straight To 90 Deg, Integral Chafe Sleeve	K003 and On	1
120	AE4697E0560-090 171K115B0560C090	Eaton/Parker: Hose Assy, -4 x 56.0" , 90 Deg Fittings, Integral Chafe Sleeve	K003 and On	1
130	AE2463511E0111 171K005-4CR-0111	Eaton/parker: Hose Assy, -4 x 11.125", Straight To 90Deg, Integral Chafe Sleeve	K003 and On	1

Figure Item Number	Part Number	Part Name	Effectivity Code	Amount in Assy.
140	AE2463510H0104 171K003-8CR-0104	Eaton/Parker: Hose Assy, -8 x 10.5" Straight To 45 Deg, Integral Chafe Sleeve	K003 and On	1
160	AE2463511E0330 171K005-4CR-0330	Eaton/Parker: Hose Assy, -4 x 33.0", Straight To 90 Deg, Integral Chafe Sleeve	K003 and On	1
170	AE2463510E0334 171K003-4CR-0334	Eaton/Parker: Hose Assy, -4 x 33.5", Straight To 45 Deg, Integral Chafe Sleeve	K003 and On	1
180	AE4695E0194-180 171K060B0194C180	Eaton/Parker: Hose Assy, -4 x 19.5", 45 Deg Fittings, Integral Chafe Sleeve	K003 and On	1
190	AE2463510G0180 171K003-6CR-0180	Eaton/Parker: Hose Assy, -6 x 18.0", Straight To 45 Deg, Integral Chafe Sleeve	K003 and On	1
200	AE4697E0424-090 171K115B0424C090	Eaton/Parker: Hose Assy, -4 x 42.5", 90 Deg Fittings,Integral Chafe Sleeve	K003 and On	1
210	AE2463511E0111 171K005-4CR-0111	Eaton/Parker: Hose Assy, -4 x 11.125", Straight To 90 Deg, Integral Chafe Sleeve	K003 and On	1
220	AS21919WDG08	Clamp, Loop Type, Cushioned, Ø .500	K003 and On	16
230	AS21919WDG09	Clamp, Loop Type, Cushioned, Ø .563	K003 and On	3
240	AS21919WDG11	Clamp, Loop Type, Cushioned, Ø .688	K003 and On	1
250	AS21919WDG32	Clamp, Loop Type, Cushioned, Ø 2.000	K003 and On	2
260	AN3-3A	Bolt, 10-32 x 15/32" Undrilled	K003 and On	14
270	NAS1149F0332P	Washer, Flat #10 x .032	K003 and On	16
280	MS21042L3	Nut, Self-locking, 450°, Reduced #10-32	K003 and On	2
290	6-4 C5OX-SS	Parker: Fitting, Elbow, 37° Flare/SAE-ORB, #6 to 7/16	K003 and On	2
300	4 C5OX-SS	Parker: Fitting, Elbow, SAE-ORB / 37 Deg Flare	K003 and On	10
310	6 XHX7 062 Ori-fice	Parker: Xhx7 3/8 X 37 Deg Flare .062 Ori-fice	K003 and On	2

Figure Item Number	Part Number	Part Name	Effectivity Code	Amount in Assy.
320	AE2463511E0260 171K005-4CR-0260	Eaton/parker: Hose Assy, -4 x 26.0", Straight To 90 Deg, Integral Chafe Sleeve	K003-K018	1
330	PK29130010	Manifold, Air Connect	K003-K018	1
340	PK29130011	Bracket, Air Connect, Left	K003-K018	1
350	PK 29130012	Bracket, Air Connect, Right	K003-K018	1
360	J2F2-B	Bisco: Hose Coupling, 1/4 Male, 1/4 NPT Female, Brass	K003-K018	1
370	6 X6EF-SS	Parker: Fitting, Elbow, 3/8 Orb Outlet, 1 Psi	K003-K018	1
380	4 C5OX-SS	Parker: Fitting, Elbow, SAE-ORB / 37 Deg Flare	K003-K018	2
390	DT-370-MFMO-1	Parker: Check Valve, JIC Inlet, 3/8 Orb Outlet, 1 Psi	K003-K018	1
400	NAS1149F0332P	Washer, Flat #10 x 0.032	K003-K018	8
410	AN3-12A	Bolt, 10-32 x 1-9/32" Undrilled	K003-K018	2
420	MS21042L3	Nut, Self-locking, 450 Deg, Reduced #10-32	K003-K018	6
430	MS24694-S49	Screw, Machine, C'sunk Ø .190 x 15/32	K003-K018	4

AUXILIARY

Figure 29-20.1: Emergency Landing Gear Extension Bottle

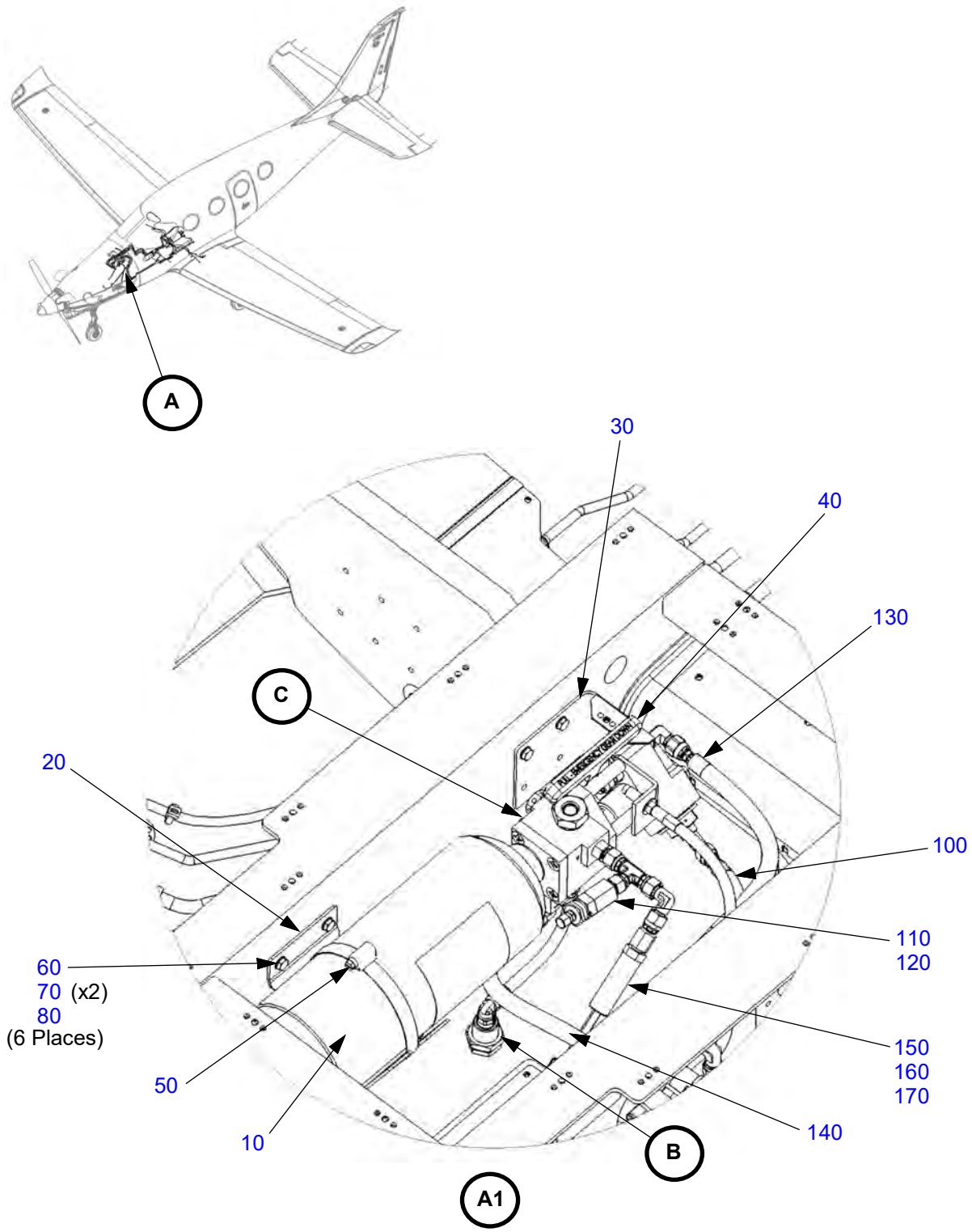

SN: K003 - K041 w/o SL-0014

Figure 29-20.1: Emergency Landing Gear Extension Bottle (Continued)

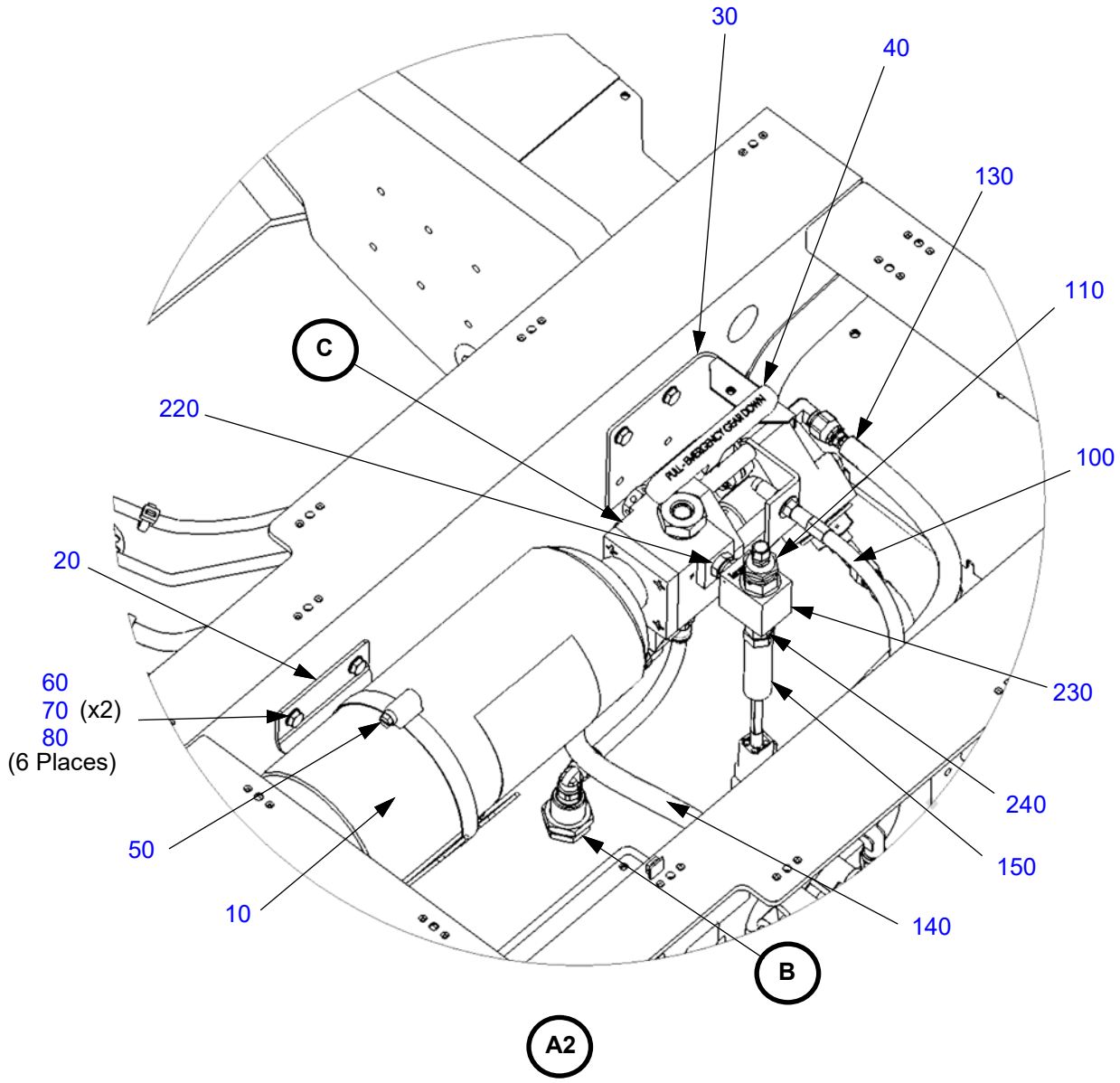

SN: K042 and On and K003 - K041 w/ SL-0014

Figure 29-20.1: Emergency Landing Gear Extension Bottle (Continued)

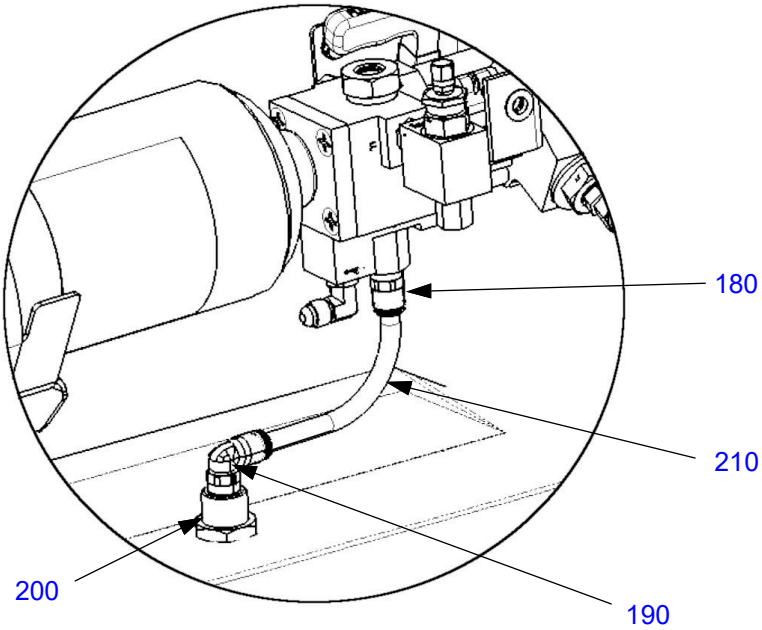

B

SN: K003 and ON

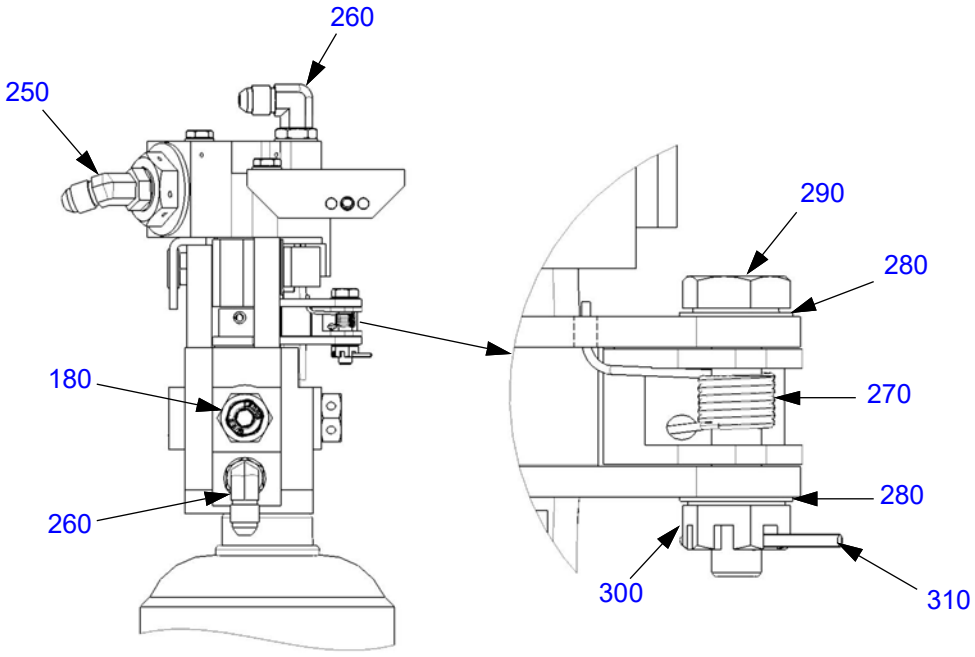

C

SN: K003 and ON

Table 29-20.1: Emergency Landing Gear Extension Bottle

Figure Item Number	Part Number	Part Name	Effectivity Code	Amount in Assy.
10	PK99007032 (Vendor PN: 115522-2-000)	Pneumatic Pressurization System	K003 and On	1
20	PK29200001	Bracket, Pneumatic Pressurization Sys, Aft	K003 and On	1
30	PK29200002	Bracket, Pneumatic Pressurization Sys, Fwd	K003 and On	1
40	PK29200003	Handle, Pneumatic Pressurization System	K003 and On	1
50	AA52506F064	Hose Clamp, Style F, Size 64	K003 and On	1
60	AN3-7A	Bolt, 10-32 x 29/32" Undrilled	K003 and On	6
70	NAS1149F0332P	Washer, Flat #10 x .032	K003 and On	12
80	MS21042L3	Nut, Self-locking, 450°, Reduced #10-32	K003 and On	6
90	AE2463511E0064 171K005-4CR-0064	Eaton/parker: Hose Assy, -4 x 6.5", Straight To 90 Deg, Integral Chafe Sleeve	K003 and On	1
100	PK29200004	Bracket, Blowdown Reset	K003 and On	1
110	MS28889-2	Valve, Air, High Pressure Charging, 5000 PSI	K003 and On	1
120	AS5173J0504	Fitting, Bushing, Port, Reducer	K003 - K041*	1
130	AE2463511E0126 171K005-4CR-0126	Eaton/parker: Hose Assy, -4 x 12.75", Straight To 90 Deg, Integral Chafe Sleeve	K003 and On	1
140	AE2463509E0090 171K001-4CR-0090	Eaton/parker: Hose Assy, -4 x 9.0", Straight Fittings, Integral Chafe Sleeve	K003 and On	1
150	AK29202000	Nitrogen Pressure Transducer With Connector	K003 and On	1
160	4 G6X-SS	Parker: Gauge Fitting , NPT / 37 Degree Swivel	K003 - K041*	1
170	AS1034J0404	Fitting, Elbow, 90 Deg, Flared, 1/4" OD Tube	K003 - K041*	1

Figure Item Number	Part Number	Part Name	Effectivity Code	Amount in Assy.
180	PK99005380	Male Stud Coupling, Hexagonal, NPT Thread	K003 and On	1
190	PK99005381	Male Stud Elbow, NPT Thread	K003 and On	1
200	1871-00-14	Bulkhead Adapter, 1/4 NPT Thread	K003 and On	1
210	101-0312062-9T-C25 (or) 103-0312062-9T-C25 (or) 104-0312062-9T-C25	Parker Flexible Nylon Tubing	K003 and On	A/R
220	4 F5OHAO-SS	Parker: Straight Thread Union, SAE-ORB, 1/4	K042 and On**	1
230	PK29200006	Adapter, Nitrogen Blowdown Bottle	K042 and On**	1
240	4 1/8 F5OG-SS	SAE-ORB / NPTF, Male To Female	K042 and On**	1
250	4 V5OX-SS	Parker: Fitting, 45 Deg Elbow, SAE-ORB/ 37 Deg Flare	K003 and On	1
260	4 C5OX-SS	Parker: Fitting, Elbow, SAE-ORB / 37 Deg Flare	K003 and On	2
270	PK99006017	Torsion Spring	K003 and On	1
280	NAS1149F0316P	Washer, Flat #10 x .016	K003 and On	2
290	AN3-10	Bolt, 10-32 x 1-1/32" Drilled Shank	K003 and On	1
300	AN320-3	Nut, Castellated, Shear, Steel 10-32	K003 and On	1
310	MS24665-71	Pin, Cotter, Cad Steel Ø .047 x .75	K003 and On	1

*Without SL-0014
**Also: K003 - K041 with SL-0014

This Page Intentionally Left Blank

CHAPTER
30

Ice and Rain Protection

This Page Intentionally Left Blank

Table of Contents
and
List of Effective Pages

Chapter/Section	Page Number	Effective Date
30-Title	Page 1	03 Apr 2020
30-Title	Page 2	03 Apr 2020
30-LOEP	Page 1	26 Mar 2024
30-LOEP	Page 2	26 Mar 2024
30-TOC	Page 1	26 Mar 2024
30-TOC	Page 2	03 Apr 2020
Airfoil and Engine Inlet		
30-10	Page 1	26 Mar 2024
30-10	Page 2	03 Apr 2020
30-10	Page 3	03 Apr 2020
30-10	Page 4	13 Jan 2023
30-10	Page 5	03 Apr 2020
30-10	Page 6	03 Apr 2020
30-10	Page 7	14 Jul 2021
30-10	Page 8	14 Jul 2021
30-10	Page 9	13 Jan 2023
30-10	Page 10	26 Mar 2024
30-10	Page 11	26 Mar 2024
30-10	Page 12	26 Mar 2024
30-10	Page 13	26 Mar 2024
30-10	Page 14	26 Mar 2024
30-10	Page 15	26 Mar 2024
30-10	Page 16	26 Mar 2024
30-10	Page 17	26 Mar 2024
30-10	Page 18	26 Mar 2024
Pitot and Stall Prevention Systems		
30-30	Page 1	26 Mar 2024
30-30	Page 2	26 Mar 2024

Windshield
30-40 ..... Page 1 ..... 03 Apr 2020
30-40 ..... Page 2 ..... 26 Mar 2024
30-40 ..... Page 3 ..... 26 Mar 2024
30-40 ..... Page 4 ..... 26 Mar 2024

Propeller
30-60 ..... Page 1 ..... 03 Apr 2020
30-60 ..... Page 2 ..... 03 Apr 2020
30-60 ..... Page 3 ..... 03 Apr 2020
30-60 ..... Page 4 ..... 03 Apr 2020

CHAPTER 30

Table of Contents

List of Effective Pages ..... 30-LOEP / Page 1
Table of Contents ..... 30-TOC / Page1

Paragraph **Page Number**

Airfoil and Engine Inlet

Figure 30-10.1: Airfoil De-Ice Boots ..... 30-10 / Page 1
Table 30-10.1: Airfoil De-Ice Boots ..... 30-10 / Page 7
Figure 30-10.2: Engine Inlet De-Ice Boot ..... 30-10 / Page 10
Table 30-10.2: Engine Inlet De-Ice Boot ..... 30-10 / Page 14
Figure 30-10.3: Ice Detector - (SN: K011 - K055 without SB-0035) ..... 30-10 / Page 15
Table 30-10.3: Ice Detector - (SN: K011 - K055 without SB-0035) ..... 30-10 / Page 16
Figure 30-10.4: Ice Detector - (SN: K056 and on and K003-K055 with SB-0035) ..... 30-10 / Page 17
Table 30-10.4: Ice Detector - (SN: K056 and on and K003-K055 with SB-0035) ..... 30-10 / Page 18

Pitot And Stall Prevention Systems

Figure 30-30.1: Supplemental Stall Heaters ..... 30-30 / Page 1
Table 30-30.1: Supplemental Stall Heaters ..... 30-30 / Page 2

Windshield

Figure 30-40.1: Windshield De-Ice Exhaust Manifold ..... 30-40 / Page 1
Table 30-40.1: Windshield De-Ice Exhaust Manifold ..... 30-40 / Page 4

Propeller

Figure 30-60.1: Propeller De-Ice ..... 30-60 / Page 1
Table 30-60.1: Propeller De-Ice ..... 30-60 / Page 3

This Page Intentionally Left Blank

AIRFOIL AND ENGINE INLET

Figure 30-10.1: Airfoil De-Ice Boots

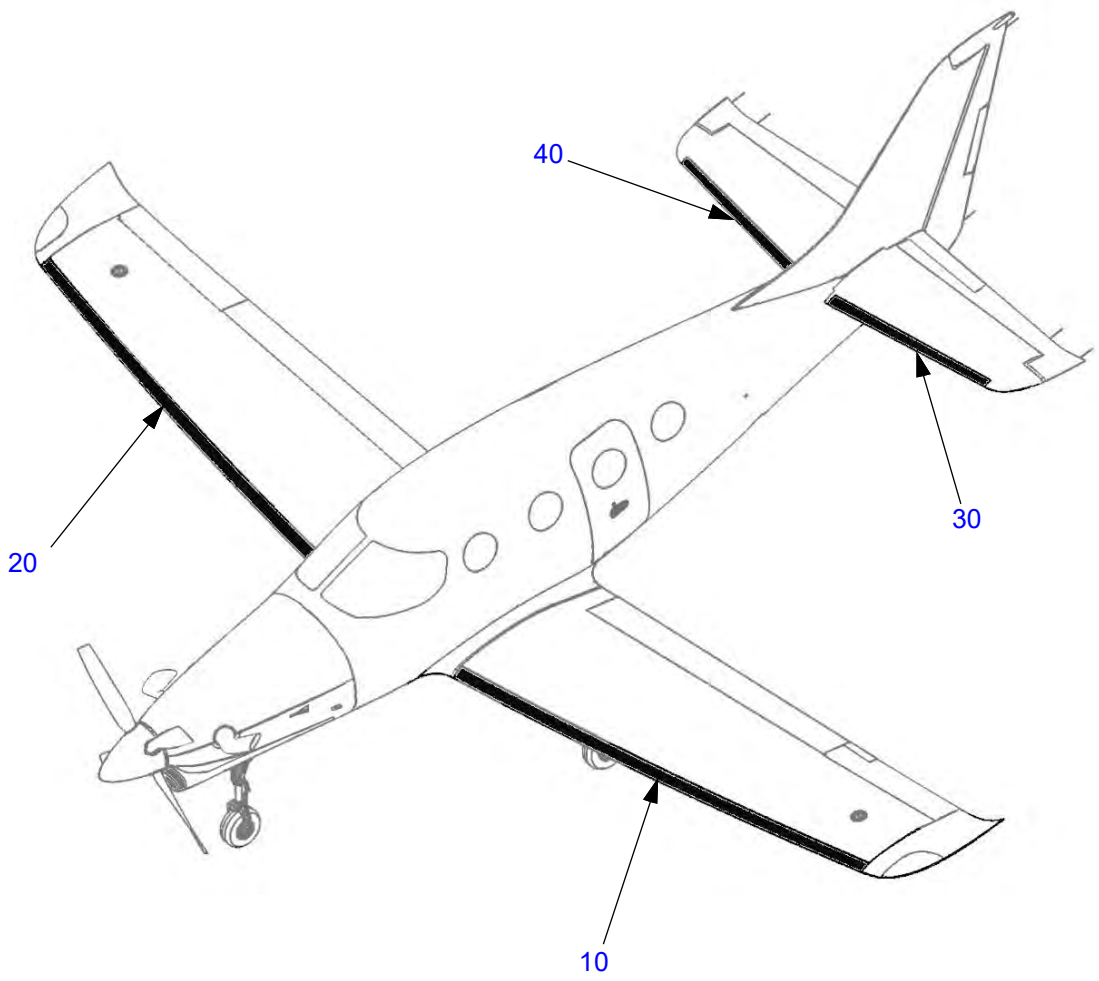

Figure 30-10.1: Airfoil De-Ice Boots (Continued)

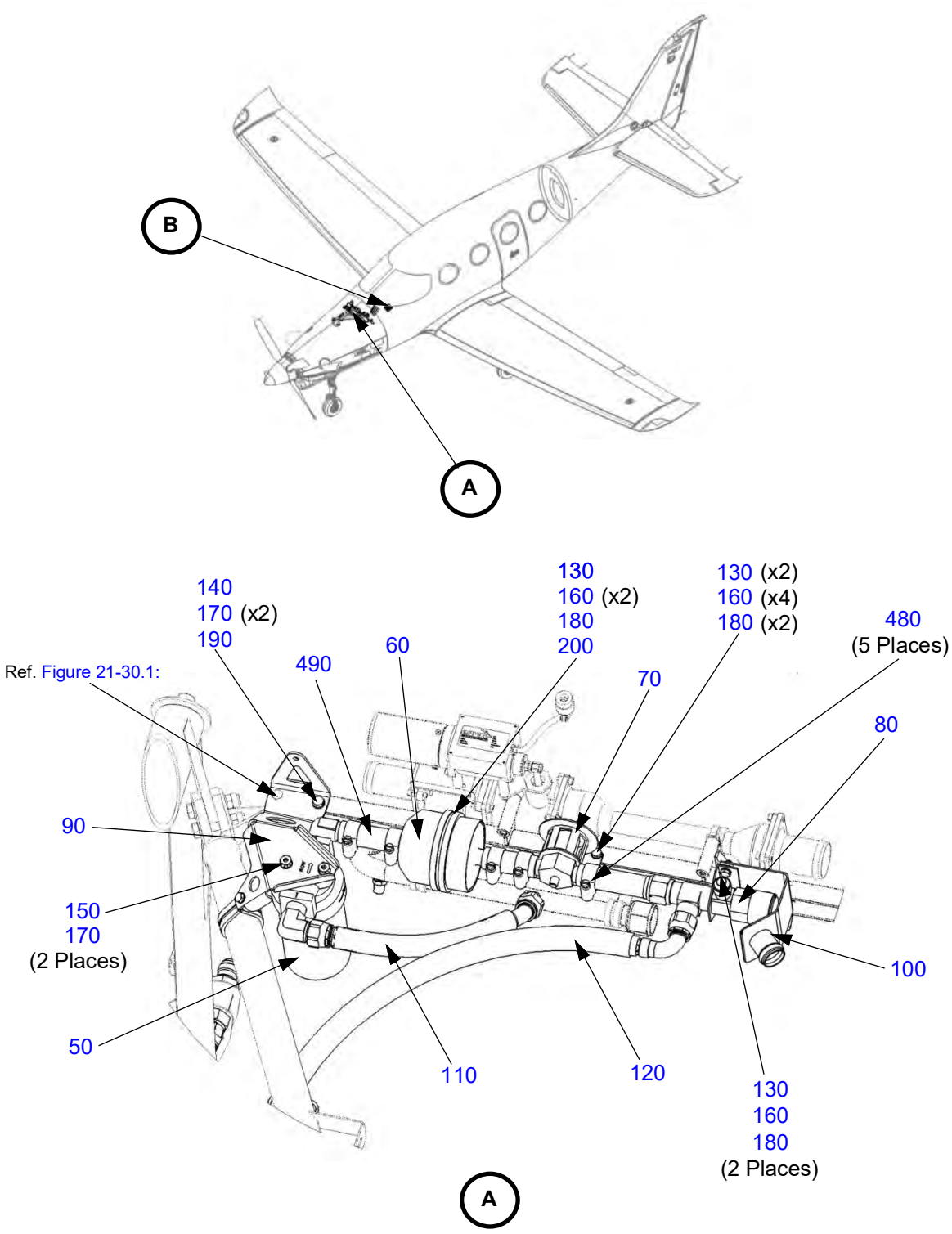

Figure 30-10.1: Airfoil De-Ice Boots (Continued)

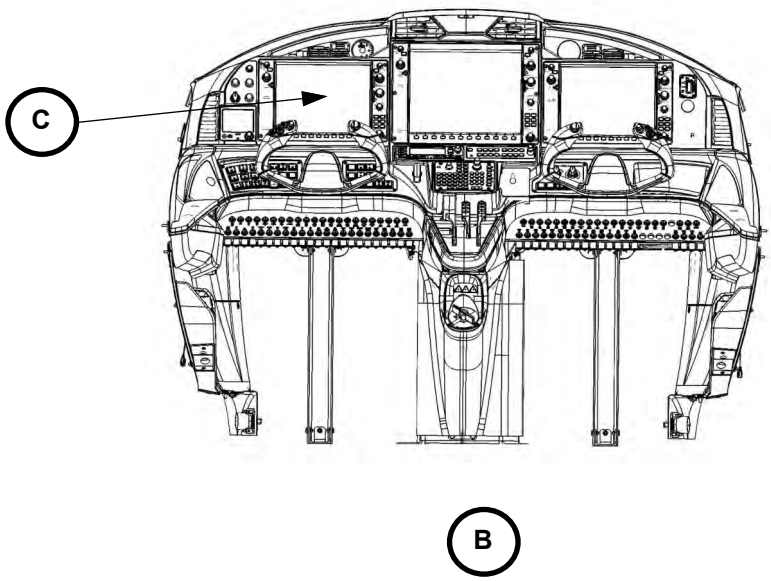

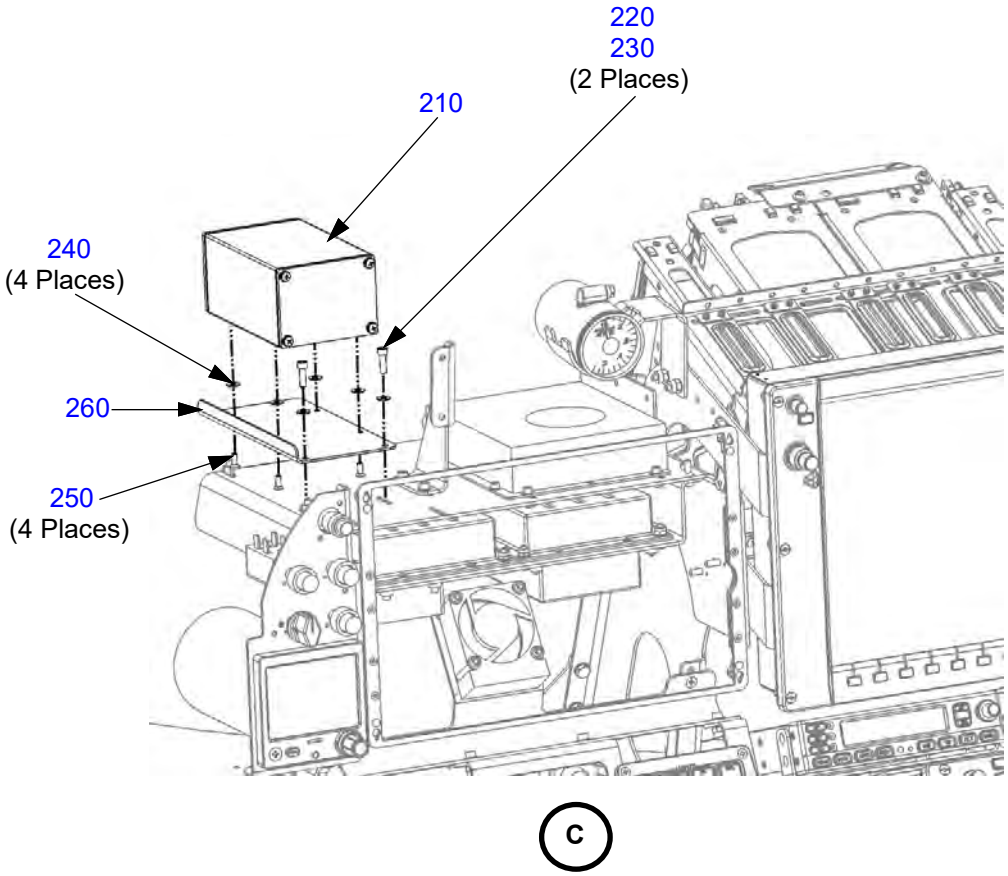

Figure 30-10.1: Airfoil De-Ice Boots (Continued)

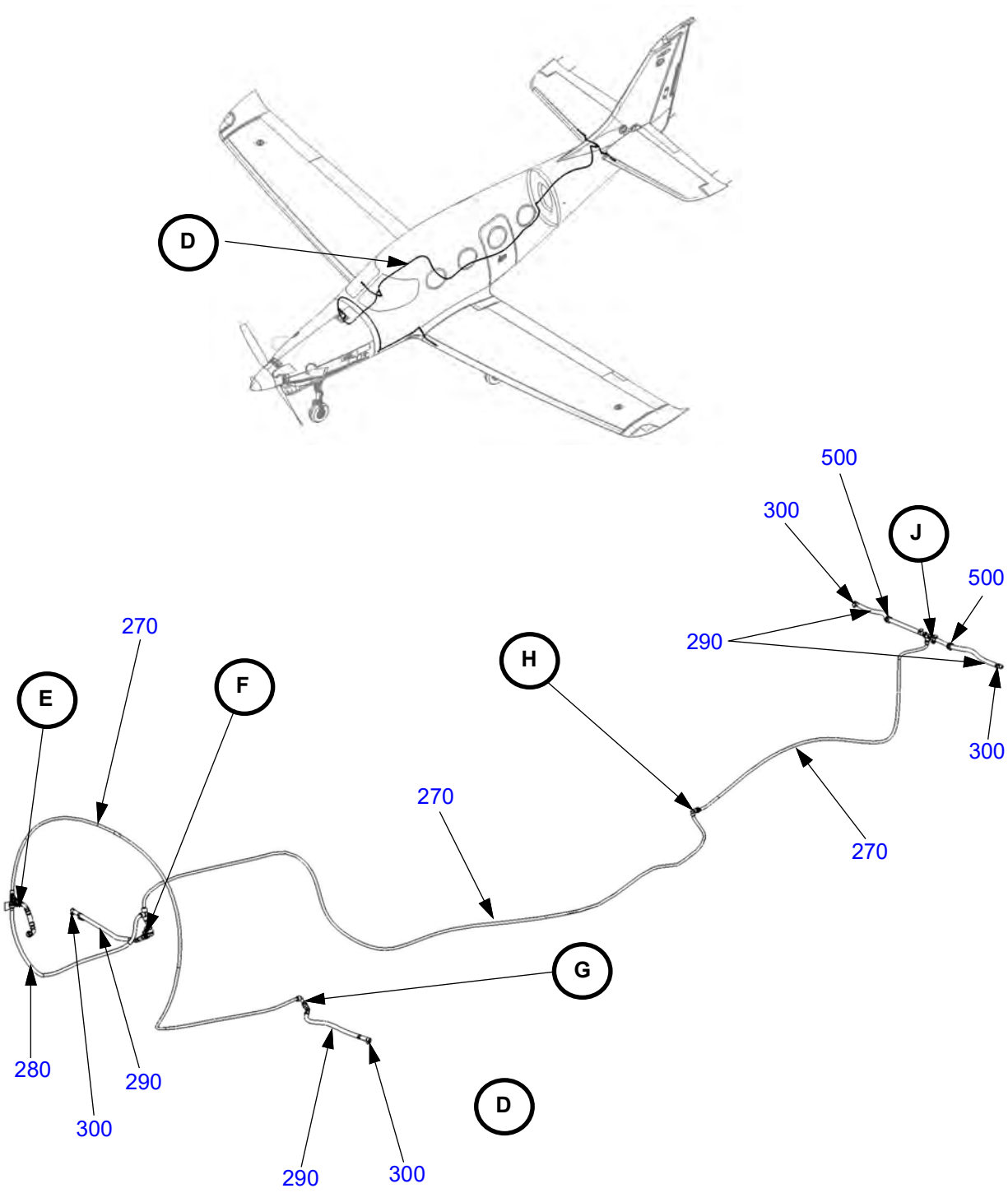

Figure 30-10.1: Airfoil De-Ice Boots (Continued)

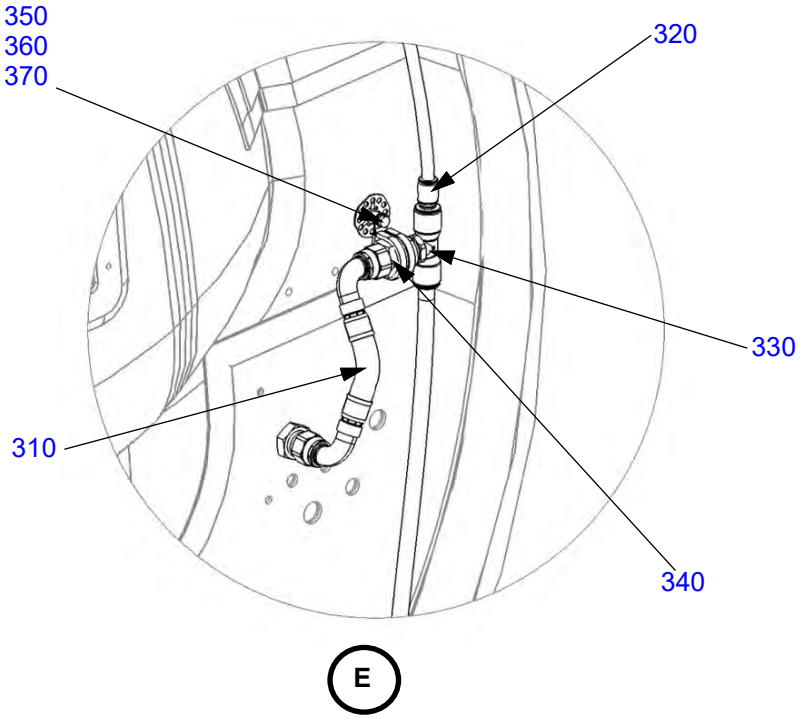

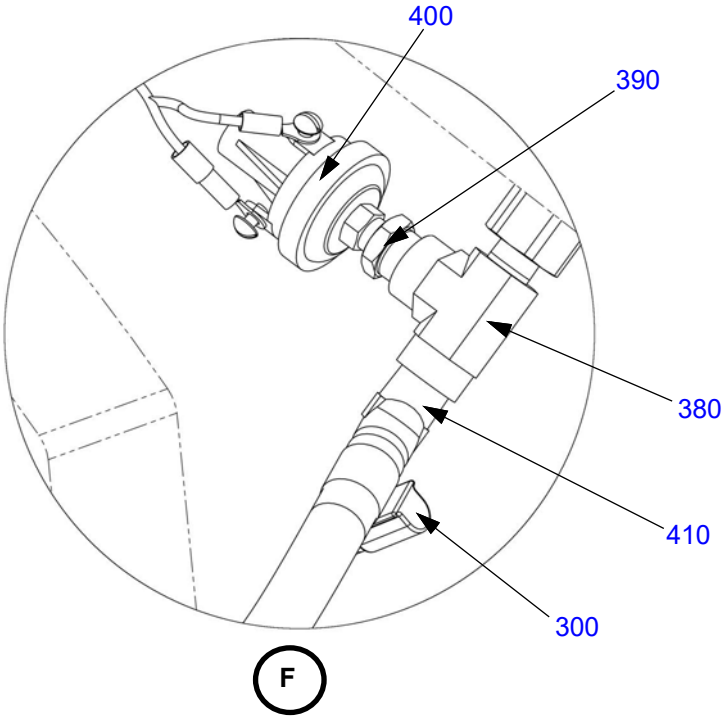

Figure 30-10.1: Airfoil De-Ice Boots (Continued)

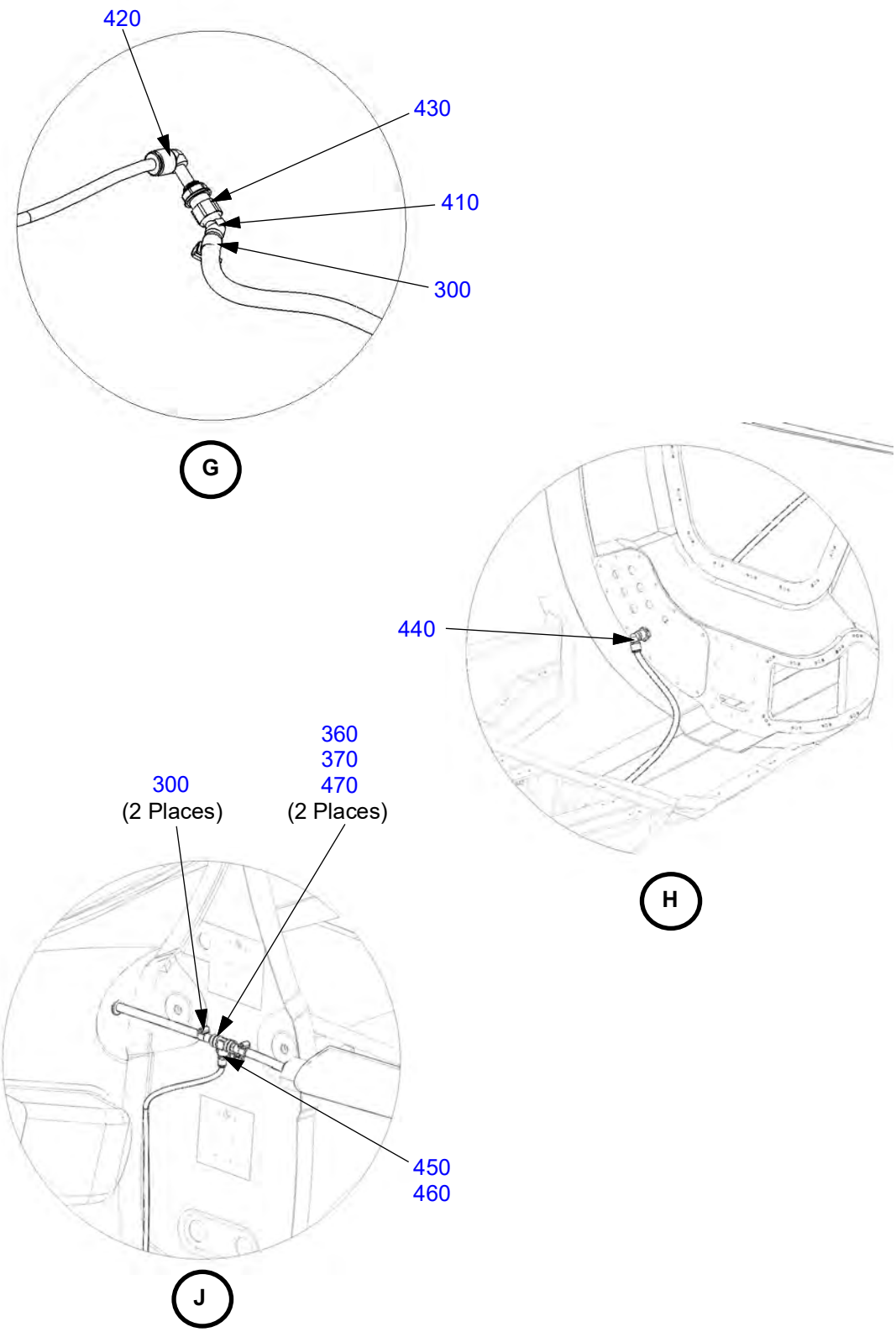

Table 30-10.1: Airfoil De-Ice Boots

Figure Item Number	Part Number	Part Name	Effectivity Code	Amount in Assy.
10	PK99300001	De-ice Boot, Wing, Left	K003 and On	1
20	PK99300002	De-ice Boot, Wing, Right	K003 and On	1
30	PK99300003	De-ice Boot, Horizontal, Left	K003 and On	1
40	PK99300004	De-ice Boot, Horizontal, Right	K003 and On	1
50	PK99007074	Water Separator, De-ice	K003 and On	1
60	PK99007075	Inline Filter, De-ice	K003 and On	1
70	PK99007076	Pressure Regulator Valve, De-ice	K003 and On	1
80	AK30001077	Ejector Flow Control Valve, Assy With Connector	K003 and On	1
90	PK30001001	Bracket, Water Seperator	K003 and On	1
100	AK71804000	Assy, Cooling Shroud, Eject. Flow Control Valve	K003 and On	1
110	AE2463531J0100/ 124J003-10CR-0100	Eaton/parker: Hose Assy, -10 x 10.0", Straight To 45 Deg, Integral Fire Sleeve	K003 and On	1
120	AE2463532J0500/ 124J002-10CR-0500	Eaton/parker: Hose Assy, -10 x 50", Straight To 90 Deg, Integral Fire Sleeve	K003 and On	1
130	AN3-4A	Bolt, 10-32 x 17/32" Undrilled	K003 and On	4
140	AN4-4A	Bolt, 1/4-28 x 17/32" Undrilled	K003 and On	1
150	MS20074-04-03	Bolt, Coarse Thread, 1/4-20 x .469	K003 and On	2
160	NAS1149F0332P	Washer, Flat #10 x .032	K003 and On	10
170	NAS1149F0432P	Washer, Flat 1/4 x .032	K003 and On	4
180	MS21042L3	Nut, Self-locking, 450°, Reduced #10-32	K003 and On	5
190	MS21042L4	Nut, Self-locking, 450°, Reduced 1/4-28	K003 and On	1
200	AS21919WCJ48	Clamp, Loop Type, Cushioned, CRES, Ø 3.000	K003 and On	1
210	PK99300006	De-ice Timer	K003-K010*	1

Figure Item Number	Part Number	Part Name	Effectivity Code	Amount in Assy.
220	NAS1352-08-9P	Screw, Socket Head .164-32 x .563	K003-K010*	2
230	NAS1149FN832P	Washer, Flat #8 x .032	K003-K010*	2
240	MS24693-S48	Screw, Machine, C'sunk Ø .164 x 0.375	K003-K010*	4
250	NAS1149F0332P	Washer, Flat #10 x .032	K003-K010*	4
260	PK39202002	De-Ice Timer Bracket	K003-K010*	1
270	N-6-050-GRN	Flexible Nylon Tubing, Green, 3/8"	K003 and On	A/R
280	N-8-062-GRN	Flexible Nylon Tubing, Green, 1/2"	K003 and On	A/R
290	836-6	Hose, Multipurpose, Push-lok Plus, Parker	K003 and On	A/R
300	MS35842-10	Clamp, Hose	K003 and On	8
310	AE5280J0094-094	Eaton, Hose Assy, Aeroquip, -10 9.375" Nomex Reinforced	K003 and On	1
320	3166 60 62	Reducer, 1/2" x 3/8", Parker, Legris	K003 and On	1
330	3108 62 22	Male Stud Run Tee, 1/2", Parker, Legris	K003 and On	1
340	10 GTX-SS	Adapter, 5/8 37deg Flare x 1/2 Npt, Parker	K003 and On	1
350	AS21919WCJ19	Clamp, Loop Type, Cushioned, CRES, Ø 1.188	K003 and On	1
360	AN3-3A	Bolt, 10-32 x 15/32" Lg, Undrilled	K003 and On	3
370	NAS1149F0363P	Washer, Flat #10 x .063	K003 and On	3
380	1-4_MRO-SS	Tee, Male Run, 1/4, Nptf, Steel	K003 and On	1
390	AS4861W01	Bushing, Pipe, 1/4" External x 1/8" Internal, Aluminum	K003 and On	1
400	AK30002005 B	De-ice Pressure Switch Assy With Connector	K003 and On	1
410	AS5186W0604	Elbow, 3/8 ID Hose, 7075-t6 Aluminum Alloy	K003 and On	2
420	3036 60 14	Female Bulkhead Connector, 3/8" x 1/4" NPT, Parker, Legris	K003 and On	1
430	9 3182 60 00	Plug-in Compact Elbow, .375", Parker, Legris	K003 and On	1

Figure Item Number	Part Number	Part Name	Effectivity Code	Amount in Assy.
440	3139 10 00	Bulkhead Elbow, 3/8", Parker, Legris	K003 and On	1
450	3175 60 14	Male Stud Coupling, 3/8" x 1/4" NPT, Parker, Legris	K003 and On	1
460	AS4857W02	Tee, Pipe	K003 and On	1
470	AS21919WCJ12	Clamp, Loop Type, Cushioned, CRES, Ø .750	K003 and On	2
480	MS35842-11	Clamp, Hose	K003 and On	5
490	836-10	Parker: Hose, Push-Lok, Multipurpose - High Temp	K003 and On	A/R
500	MS35489-106	Grommet, .688 I.D. X 1.312 O.D. x .25 Groove	K003 and On	2

*Without SB-0017.

Figure 30-10.2: Engine Inlet De-Ice Boot

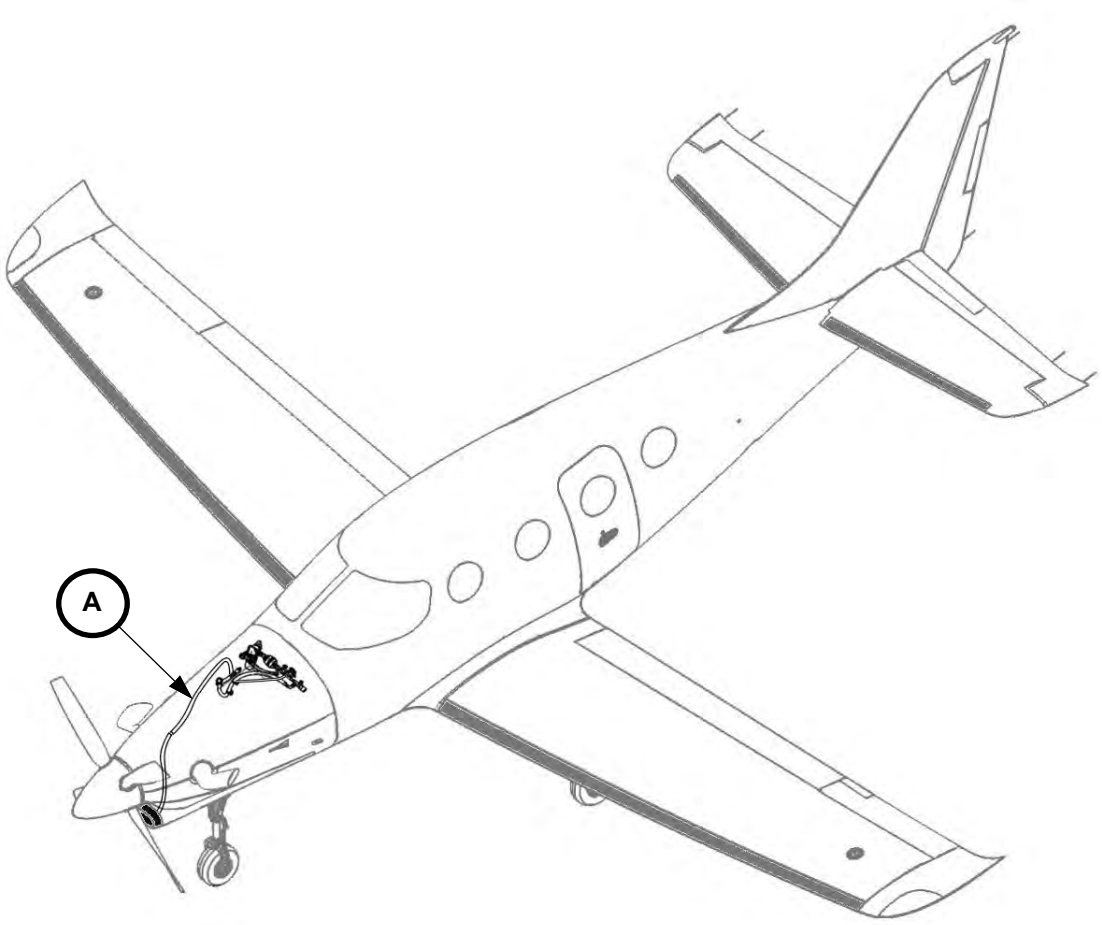

Figure 30-10.2: Engine Inlet De-Ice Boot (Continued)

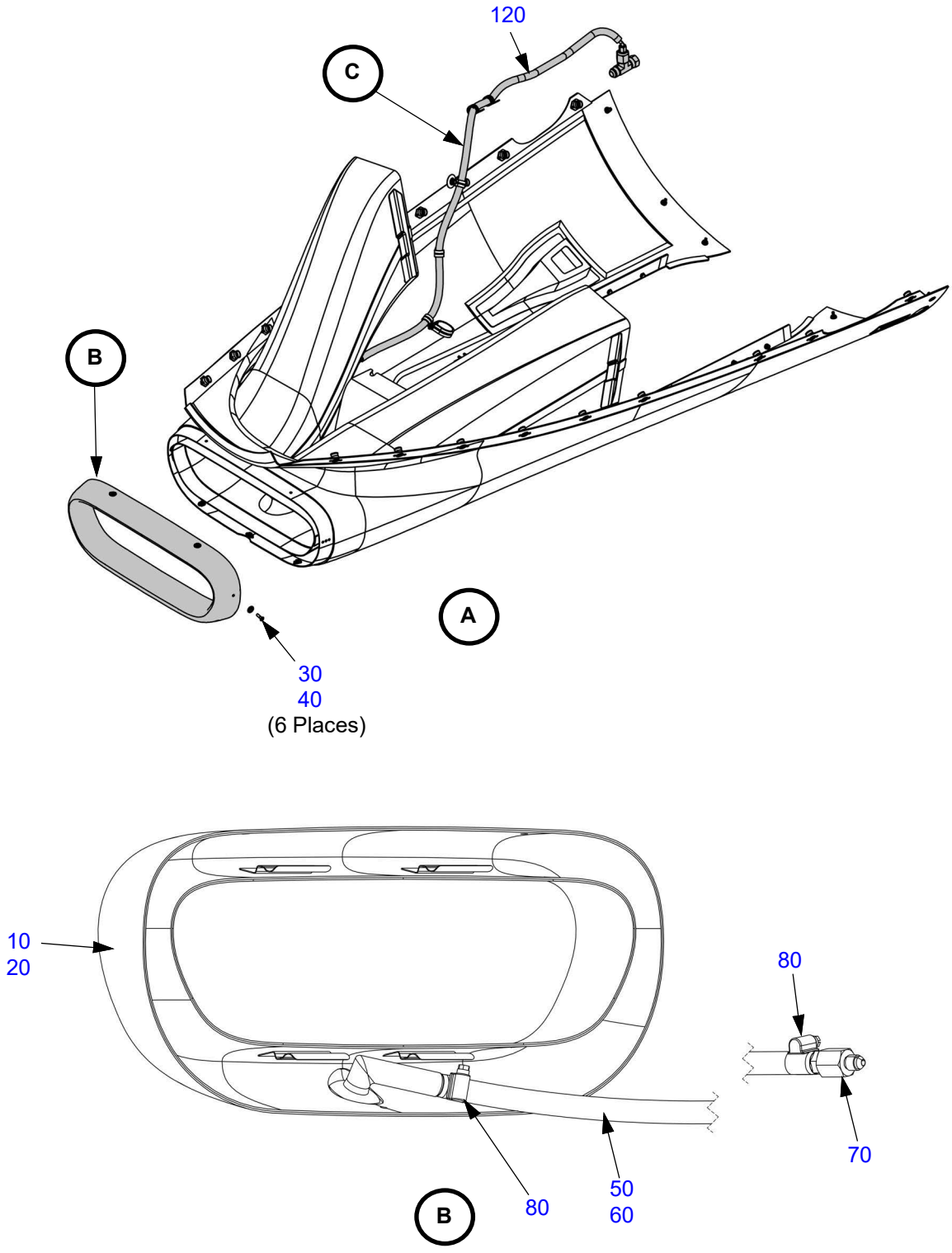

Figure 30-10.2: Engine Inlet De-Ice Boot (Continued)

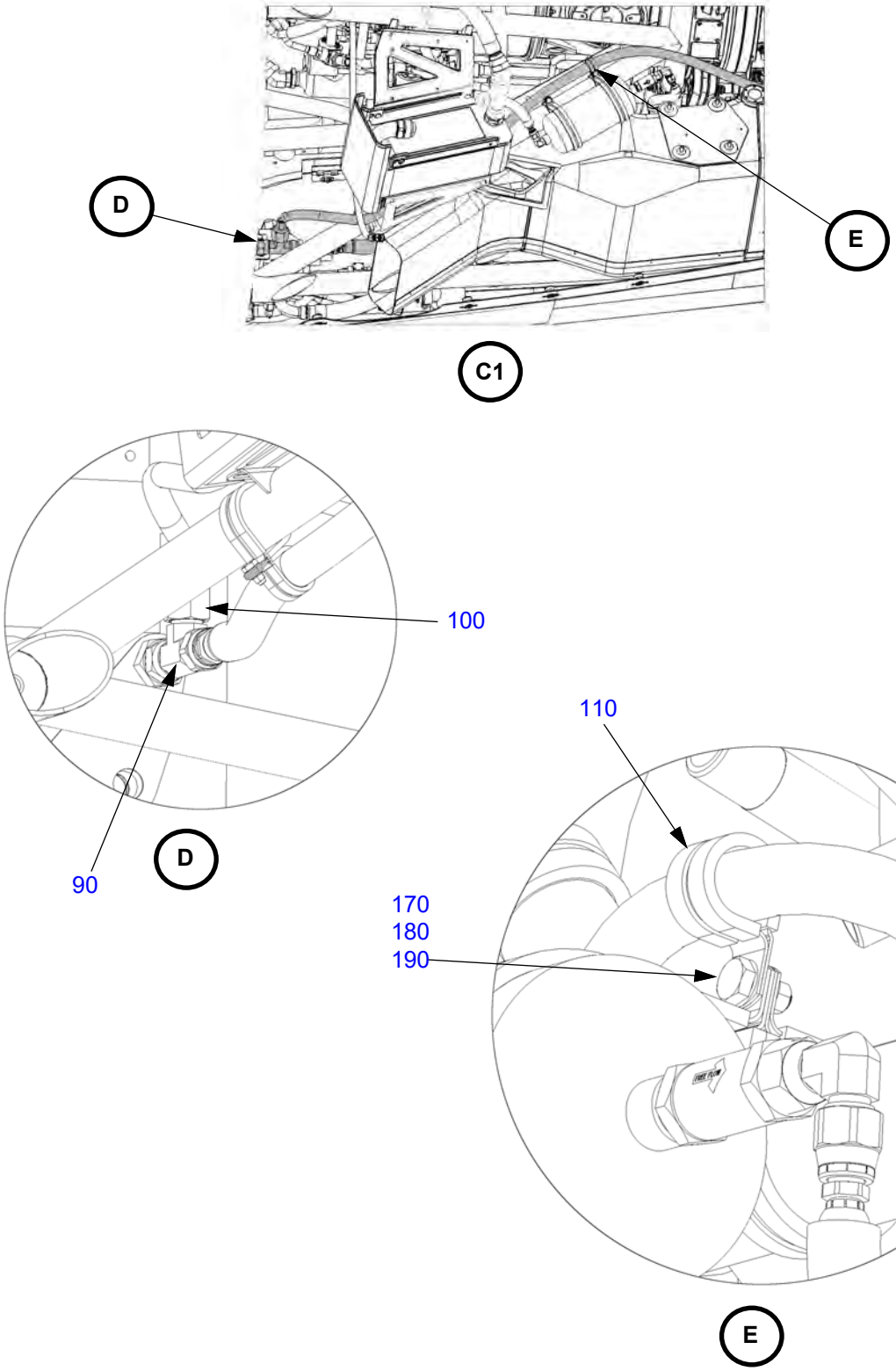

Figure 30-10.2: Engine Inlet De-Ice Boot (Continued)

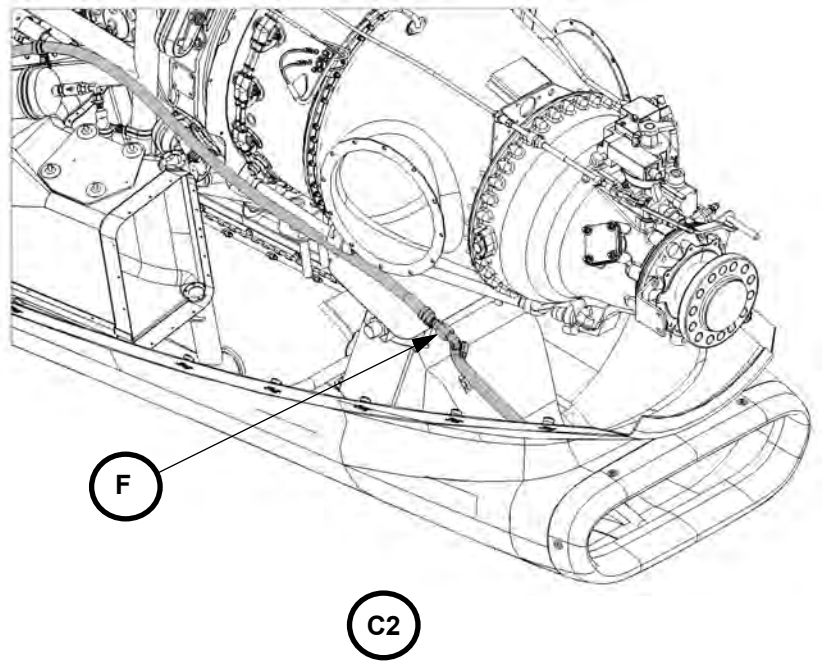

C2

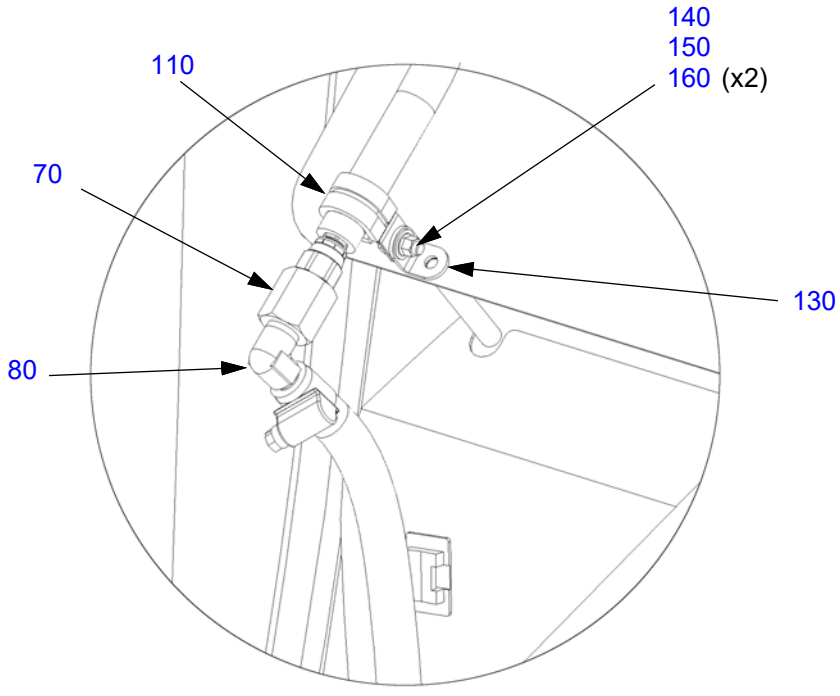

F

Table 30-10.2: Engine Inlet De-Ice Boot

Figure Item Number	Part Number	Part Name	Effectivity Code	Amount in Assy.
10	PK99300008	Boot, Lip, 2.5 Inch, Classic and GX	K056 and On*	1
20	PK71600072	Lip, 2.5 Inch, Classic and GX	K056 and On*	1
30	MS24694-C50	Screw, Machine, C'sunk, CRES Ø .190 x 17/32	K056 and On*	6
40	NAS1169C10L	Washer, Dimpled, CRES No. 10 x .016	K056 and On*	6
50	836-6	Hose, Multipurpose, Push-Lok Plus, Parker	K056 and On*	A/R
60	2650-12 AE102-12	Parker/Eaton: Fire Resistant Sleeve, 3/4" ID, -65F to 450F	K056 and On*	A/R
70	4-4 GTX-SS	Fitting, 1/4-18 Straight, Parker	K056 and On*	1
80	MS35842-10	Clamp, Hose	K056 and On*	2
90	10 R6X-SS	Parker Fitting	K056 and On*	1
100	10-4 TRTXN-SS	Parker Reducer, -12 to -4	K056 and On*	1
110	AS21919WCJ10	Clamp, Loop Type, Cushioned, Cres, Ø .625	K056 and On*	2
120	AE3663162E057 0, 124J003-4CR-0570	Hose, Cowling Pneumatic Boot, -4 X 57", Straight to 45deg, Integral Fire Sleeve	K056 and On*	1
130	AN743-C12	Bracket, Support, Clamp	K056 and On*	1
140	AN3-3A	Bolt, 10-32 x 15/32" Undrilled	K056 and On*	1
150	MS21042L3	Nut, Self-locking, 450°, Reduced #10-32	K056 and On*	1
160	NAS1149F0332P	Washer, Flat #10 x .032	K056 and On*	2
170	AN3-3A	Bolt, 10-32 x 15/32" Undrilled	K056 and On*	2
180	NAS1149F0332P	Washer, Flat #10 x .032	K056 and On*	4
190	MS21042L3	Nut, Self-locking, 450°, Reduced #10-32	K056 and On*	2

*Note: Also aircraft SN K003 - K055 with SB-0035

Figure 30-10.3: Ice Detector - (SN: K011 - K055 without SB-0035)

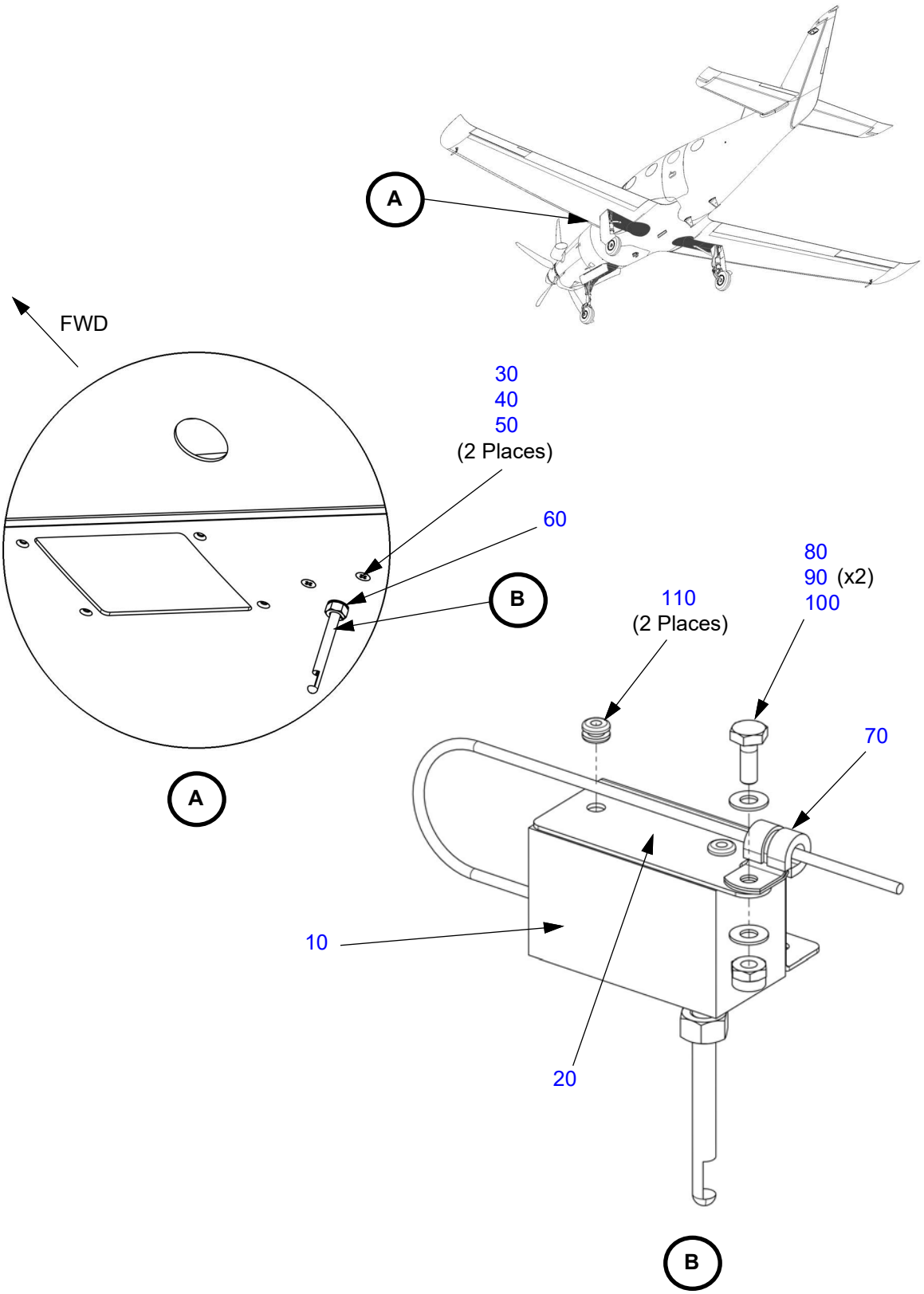

Table 30-10.3: Ice Detector - (SN: K011 - K055 without SB-0035)

Figure Item Number	Part Number	Part Name	Effectivity Code	Amount in Assy.
10	300A0100-1	Assembly, Sensor, Ice Detection, Garmin	*See Note	1
20	PK30003001	Bracket, Ice Sensor	*See Note	1
30	MS24694-C54	Screw, Machine, C'sunk, Cres Ø .190 x 25/32	*See Note	2
40	NAS1149F0332P	Washer, Flat #10 x .032	*See Note	2
50	MS21045L3	Nut, Self-locking, Steel 10-32	*See Note	2
60	NAS1149F0532P	Washer, Flat 5/16 x .032	*See Note	1
70	AS21919WDG04	Clamp, Loop Type, Cushioned, Ø .250	*See Note	1
80	AN3-4A	Bolt, 10-32 x 17/32" Undrilled	*See Note	1
90	NAS1149F0332P	Washer, Flat #10 x .032	*See Note	2
100	MS21045L3	Nut, Self-locking, Steel 10-32	*See Note	1
110	MS35489-140	Grommet, .125 I.D. x .312 O.D. x .062 Groove	*See Note	2

*Note: SN: K011 - K055 without SB-0035

Figure 30-10.4: Ice Detector - (SN: K056 and on and K003-K055 with SB-0035)

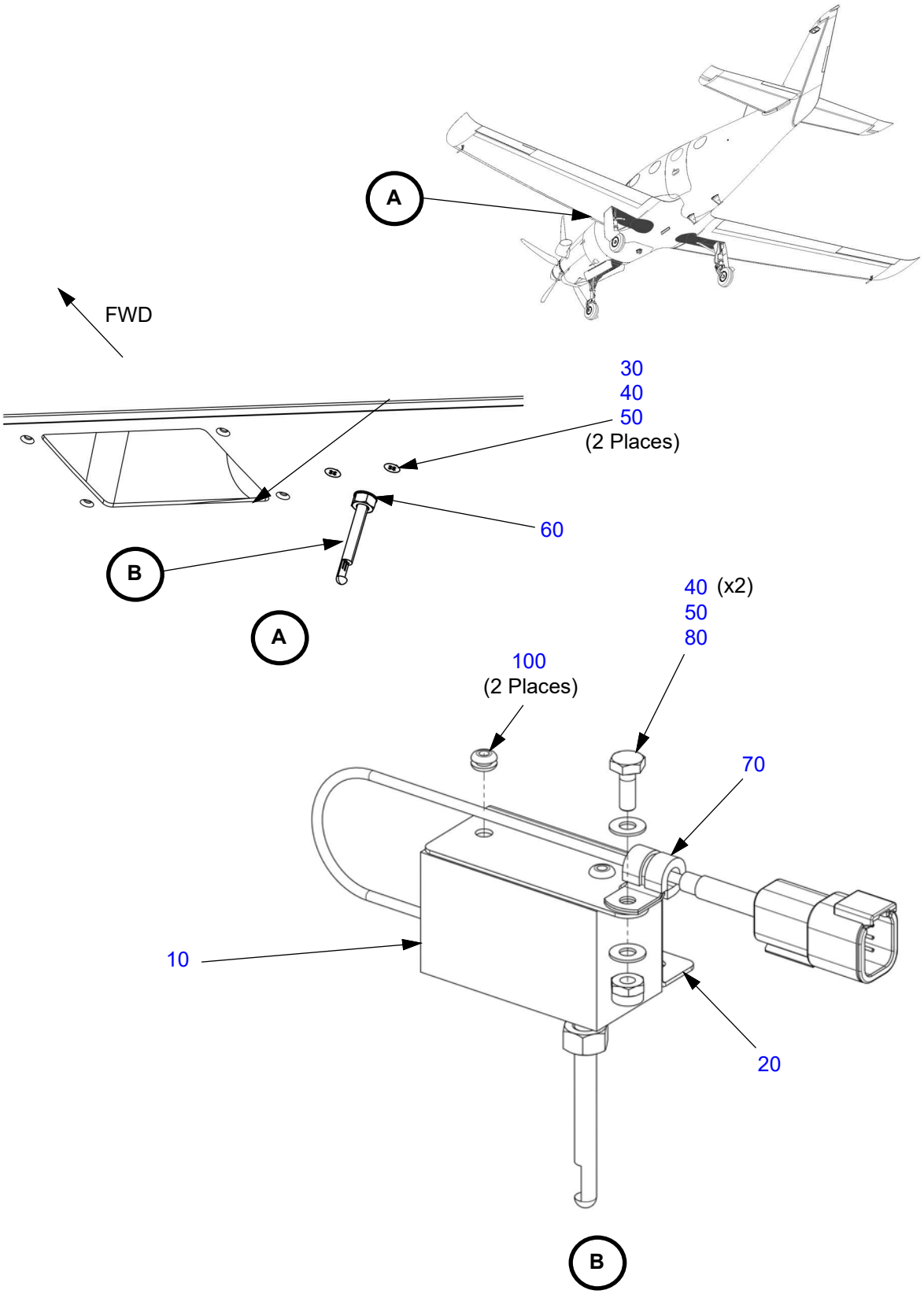

Table 30-10.4: Ice Detector - (SN: K056 and on and K003-K055 with SB-0035)

Figure Item Number	Part Number	Part Name	Effectivity Code	Amount in Assy.
10	PK99009001	Assembly, Sensor, Ice Detection, FIKI	*See Note	1
20	PK30003001	Bracket, Ice Sensor	*See Note	1
30	MS24694-C54	Screw, Machine, C'sunk, Cres Ø .190 x 25/32	*See Note	2
40	NAS1149F0332P	Washer, Flat #10 x .032	*See Note	4
50	MS21045L3	Nut, Self-locking, Steel 10-32	*See Note	3
60	NAS1149F0532P	Washer, Flat 5/16 x .032	*See Note	1
70	AS21919WDG04	Clamp, Loop Type, Cushioned, Ø .250	*See Note	1
80	AN3-4A	Bolt, 10-32 x 17/32" Undrilled	*See Note	1
90	MS35489-140	Grommet, .125 I.D. x .312 O.D. x .062 Groove	*See Note	2

*Note: SN: K056 and on and K003-K055 with SB-0035

Figure 30-30.1: Supplemental Stall Heaters

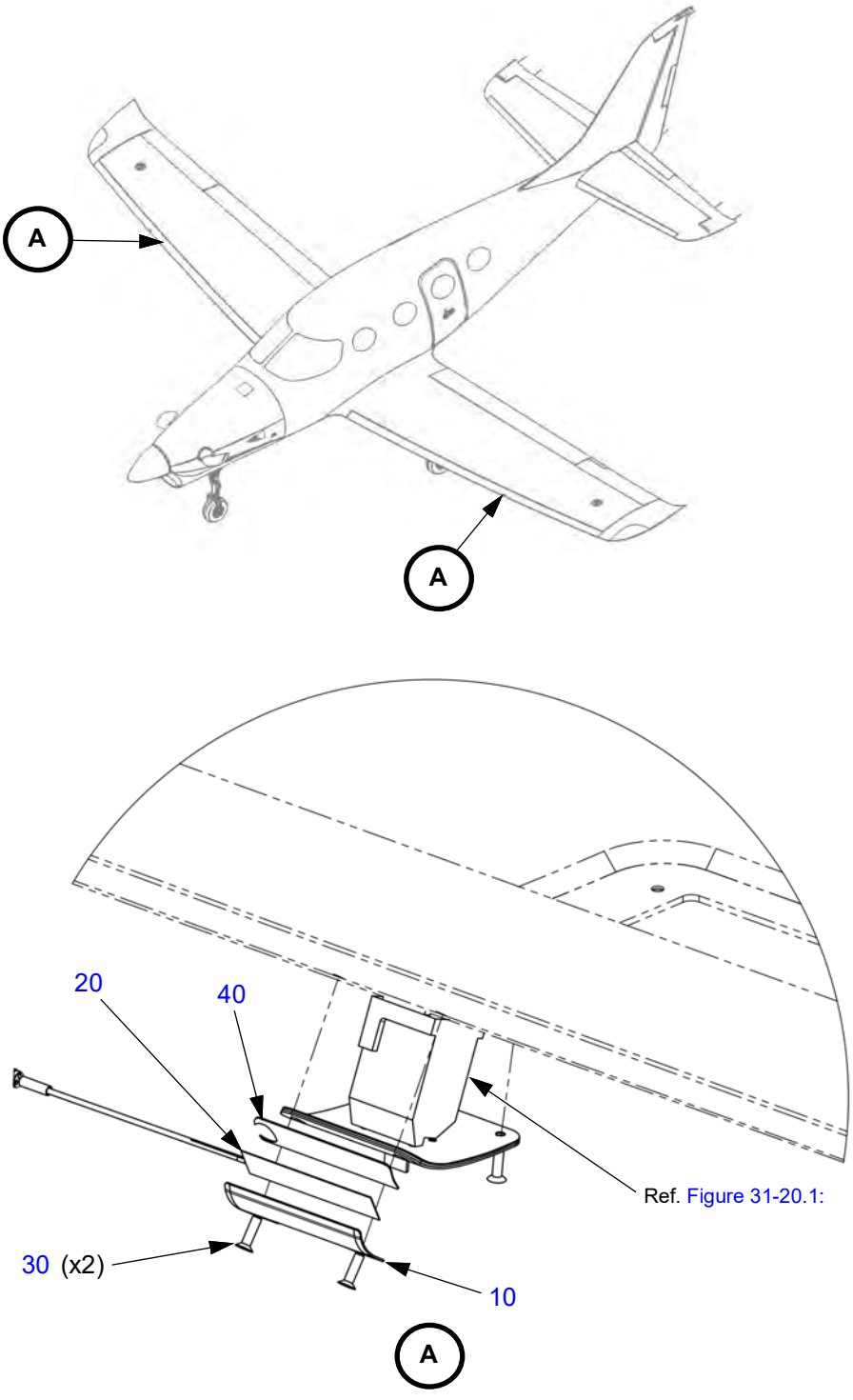

(Left side shown, right side opposite.)

Table 30-30.1: Supplemental Stall Heaters

Figure Item Number	Part Number	Part Name	Effectivity Code	Amount in Assy.
10	PK30005001	Plate, Lift Transducer, Supplemental De-Icer	K056 and On*	2
20	AK30005001	Harness Assy., Lift Transducer, Supplemental Deicer	K056 and On*	2
30	MS24693-C29	Screw, Machine, C'sunk, Cres Ø .138 X 0.625	K056 and On*	4
40	9470K25 9470K36	Insulation, McMaster-Carr, 1/64 In Thk	K056 and On*	A/R

*Also SN: K003 - K055 with SB-0035

WINDSHIELD

Figure 30-40.1: Windshield De-Ice Exhaust Manifold

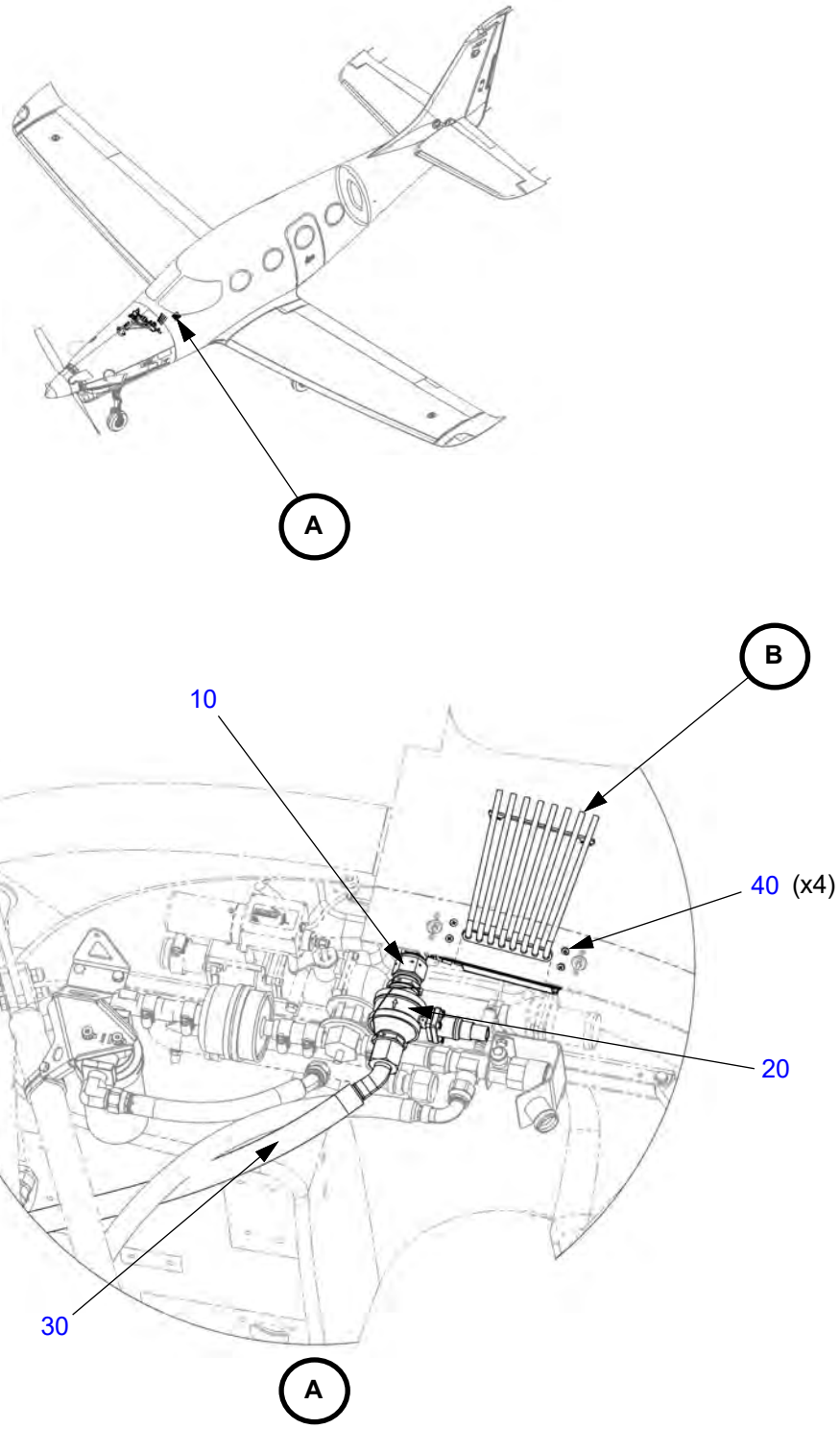

Figure 30-40.1: Windshield De-Ice Exhaust Manifold (Continued)

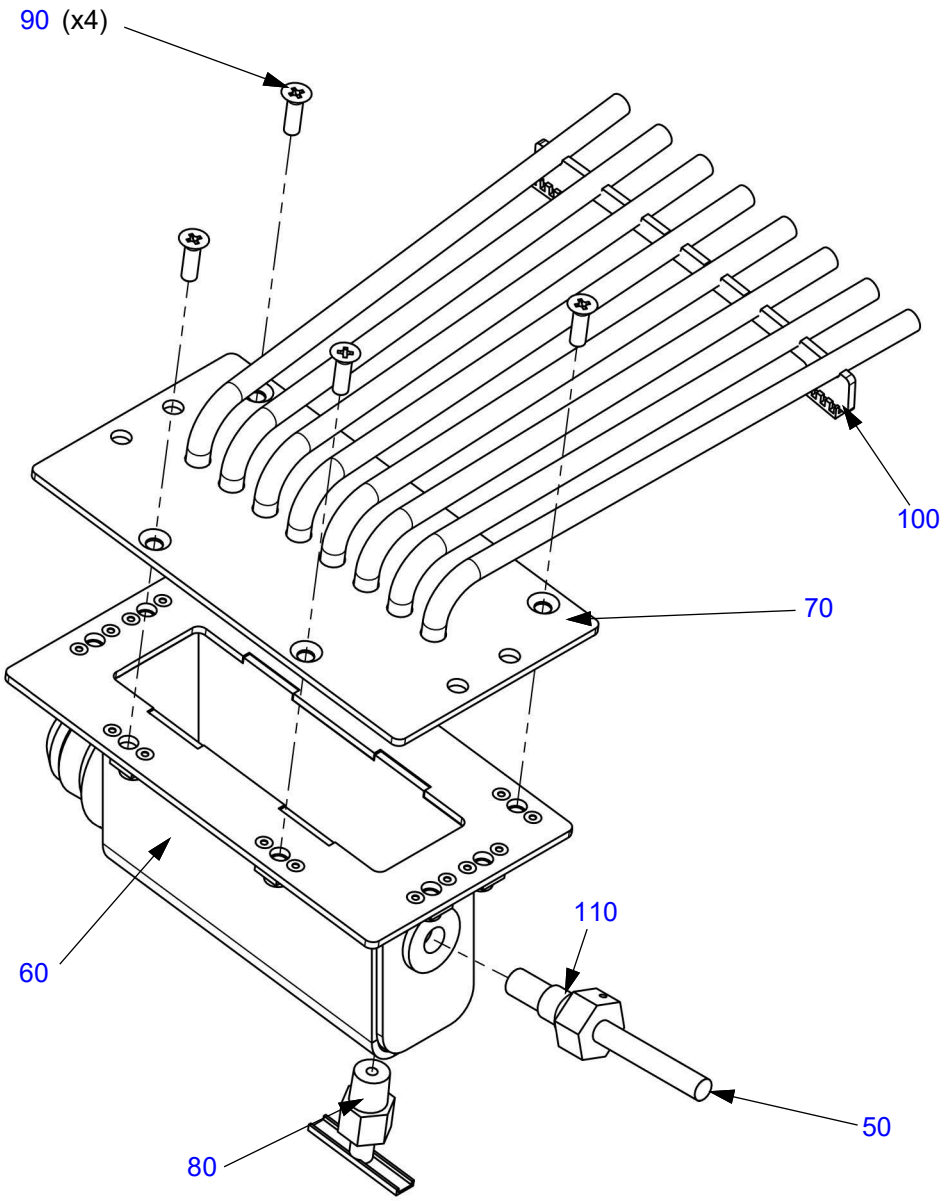

SN: K003 - K055 without SB-0035

B1

Figure 30-40.1: Windshield De-Ice Exhaust Manifold (Continued)

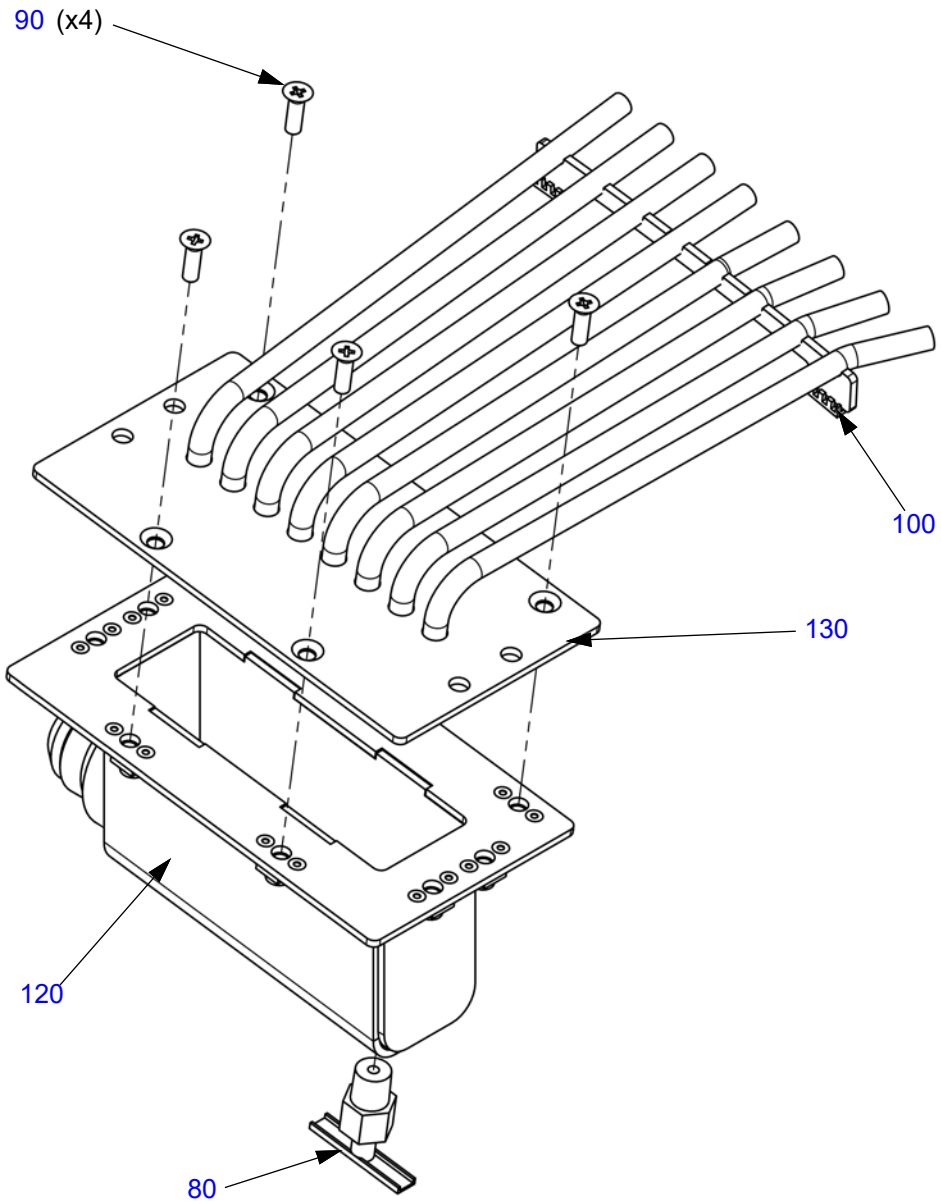

SN: K056 and On, and K003 - K055 with SB-0035

B2

Table 30-40.1: Windshield De-Ice Exhaust Manifold

Figure Item Number	Part Number	Part Name	Effectivity Code	Amount in Assy.
10	12 C6X-SS	Parker: Fitting, 3/4", 37° Flare, 90° Elbow	K003 and On	1
20	PK99007039	Solenoid Shutoff Valve	K003 and On	1
30	AE2463531K0270 124J003-12CR-0270	Eaton/parker Hose Assy, -12 x 27.0", Straight To 45 Deg, Integral Fire Sleeve	K003 and On	1
40	MS24694-S8	Screw, Machine, C'sunk Ø .164 x 23/32	K003 and On	4
50	AK3000110	Thermocouple Assy, De-ice Manifold	K003 - K055	1
60	AK30001102	Weldment, Manifold, Windshield De-ice	K003 - K055	1
70	AK30001101	Tube Assy, Windsheild De-ice	K003 - K055	1
80	MS35782-4	Cock, Drain, Center Drain, 150 Psi, 1/8"	K003 and On	1
90	MS24694-S5	Screw, Machine, C'sunk Ø .164 x 17/32	K003 and On	4
100	MS21266-3N	Grommet, Plastic, Edging	K003 and On	A/R
110	Viton 109 (or) MS35769-6 (Alternate)	O-Ring Crushwasher	K003 - K055	1
120	AK30001102 B	Weldment, Manifold, Windshield De-ice	K056 and On	1
130	AK30001101 B	Tube Assy, Windsheild De-ice	K056 and On*	1

* Also SN: K003 - K055 with SB-0035

PROPELLER

Figure 30-60.1: Propeller De-Ice

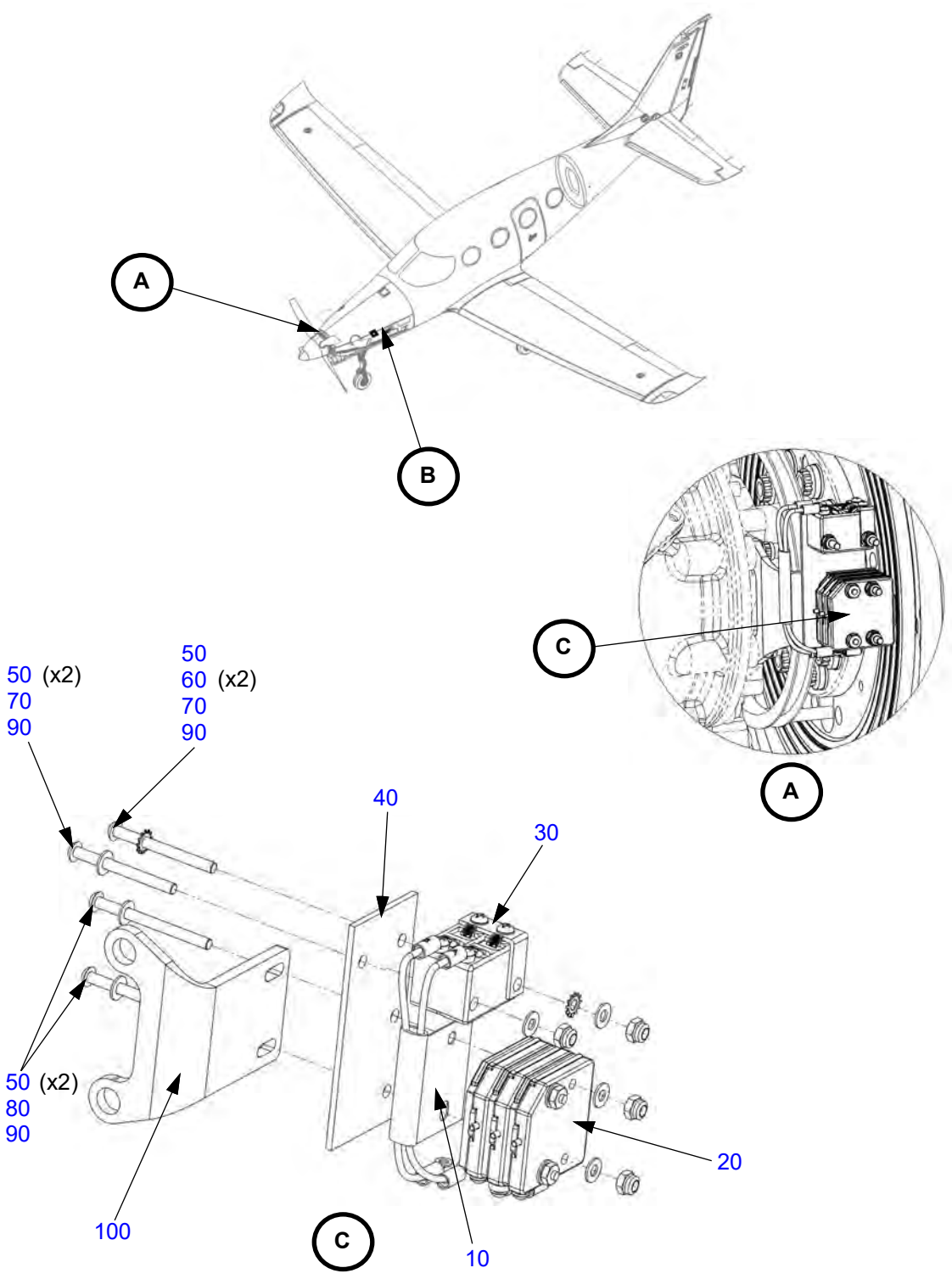

Figure 30-60.1: Propeller De-Ice (Continued)

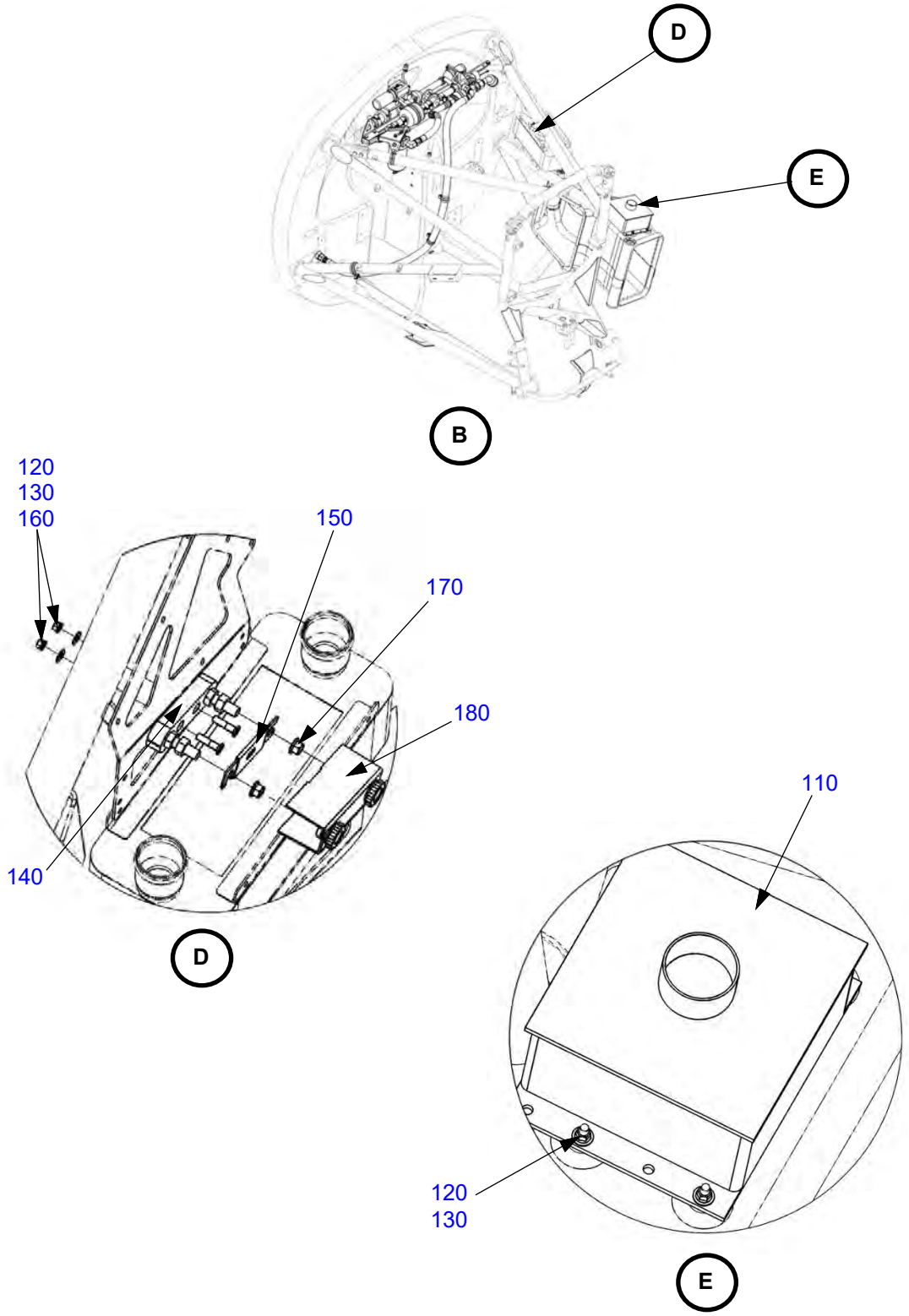

Table 30-60.1: Propeller De-Ice

Figure Item Number	Part Number	Part Name	Effectivity Code	Amount in Assy.
10	1H1157	Shim, Brush Block	K003 and On	A/R
20	3H2042-1	Modular Brush Block Assembly	K003 and On	1
30	4H3076-3	Mov Module - Assembly	K003 and On	1
40	105070	Bracket, Mounting	K003 and On	1
50	B-3837-N832	Washer, Corrosion Resistant	K003 and On	7
60	B-3855-31	Washer, Lock, External Tooth	K003 and On	2
70	B-6637-52	Screw, 8-32, Pan Head, CRES	K003 and On	2
80	B-6637-53	Screw, 8-32, Pan Head, CRES	K003 and On	2
90	B-6655-08	Nut, Hex, Self-locking	K003 and On	4
100	PK61000001	Bracket, Brush Block	K003 and On	1
110	102337	Hartzell: Timer, De-ice, Monitor	K003 and On	1
120	MS21042L3	Nut, Self-locking, 450°, Reduced #10-32	K003 and On	6
130	NAS1149F0332P	Washer, Flat #10 x .032	K003 and On	6
140	4164	Fuse Block, 800a Max, 80vdc, Bussman	K003 and On	1
150	ANL-35	Fuse, Low Voltage Limiter, 35 Amps	K003 and On	1
160	MS24694-S55	Screw, Machine, C'sunk Ø .190 x 27/32	K003 and On	2
170	PK99008169	Fuse Block Cover, ANL Fuse, 5/16"	K003 and On	1
180	MS21042L5	Nut, Self-locking, 450°, Reduced 5/16-24	K003 and On	1

This Page Intentionally Left Blank

CHAPTER
31

Indicating/Recording Systems

This Page Intentionally Left Blank

Table of Contents
and
List of Effective Pages

Chapter/Section	Page Number	Effective Date
31-Title	Page 1	03 Apr 2020
31-Title	Page 2	03 Apr 2020
31-LOEP	Page 1	03 Apr 2020
31-LOEP	Page 2	03 Apr 2020
31-TOC	Page 1	03 Apr 2020
31-TOC	Page 2	03 Apr 2020
Independent Instruments		
31-20	Page 1	03 Apr 2020
31-20	Page 2	03 Apr 2020
31-20	Page 3	03 Apr 2020
31-20	Page 4	13 Jan 2023

This Page Intentionally Left Blank

CHAPTER 31

Table of Contents

List of Effective Pages ..... 31-LOEP / Page 1
Table of Contents ..... 31-TOC / Page1

Paragraph **Page Number**

Independent Instruments

Figure 31-20.1: Stall Prevention System ..... 31-20 / Page 1
Table 31-20.1: Stall Prevention System ..... 31-20 / Page 4

This Page Intentionally Left Blank

INDEPENDENT INSTRUMENTS

Figure 31-20.1: Stall Prevention System

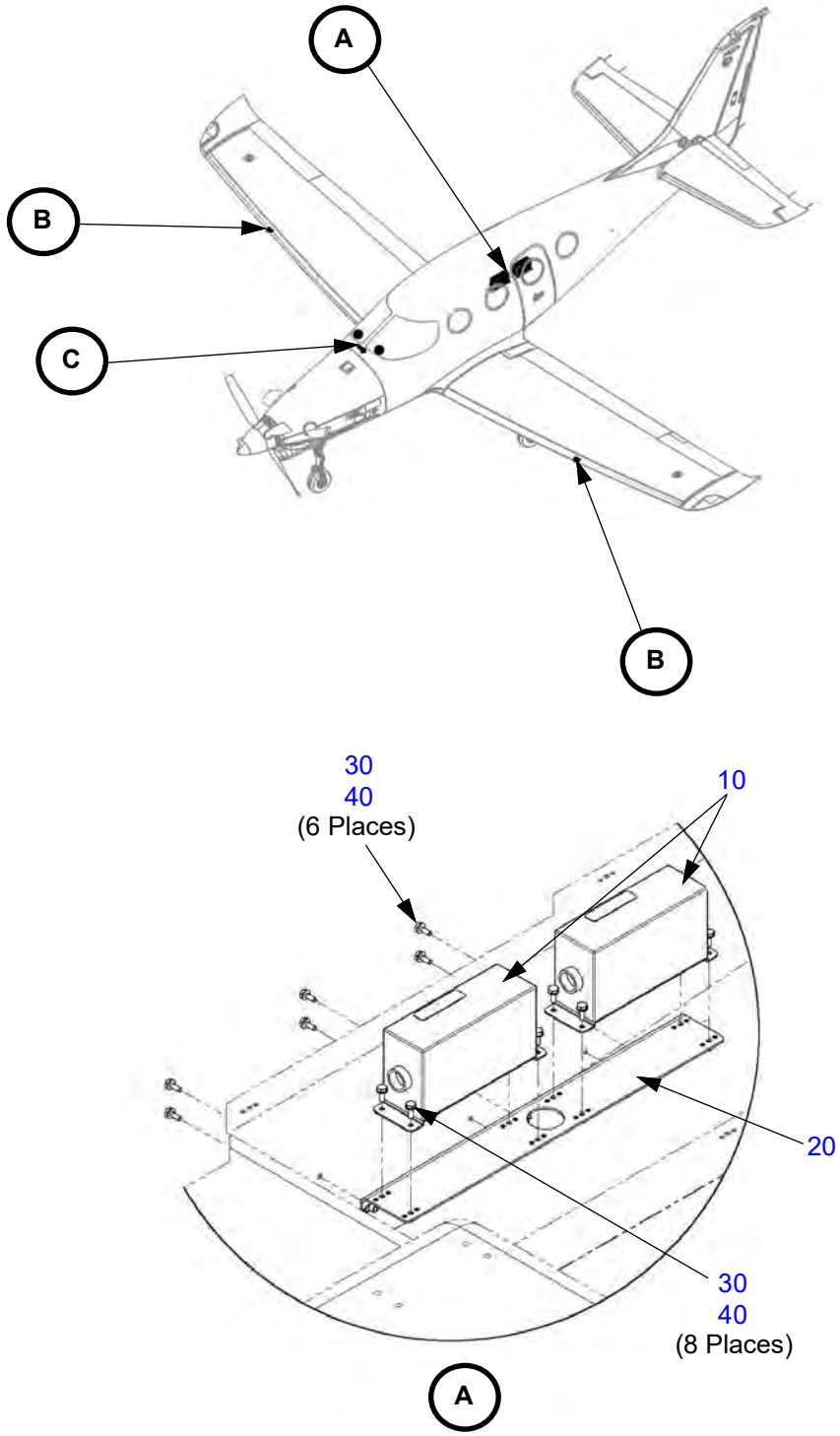

Figure 31-20.1: Stall Prevention System (Continued)

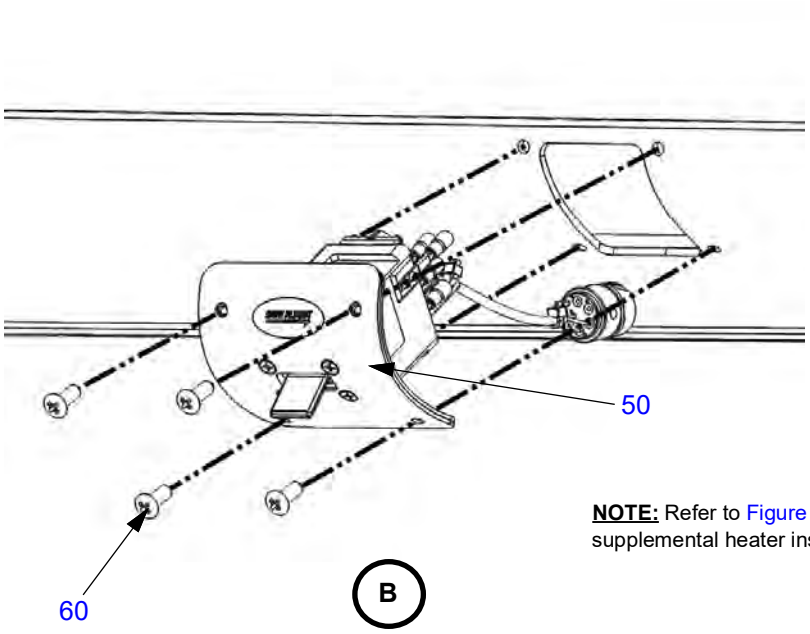

NOTE: Refer to Figure 30-30.1: for the supplemental heater installation.

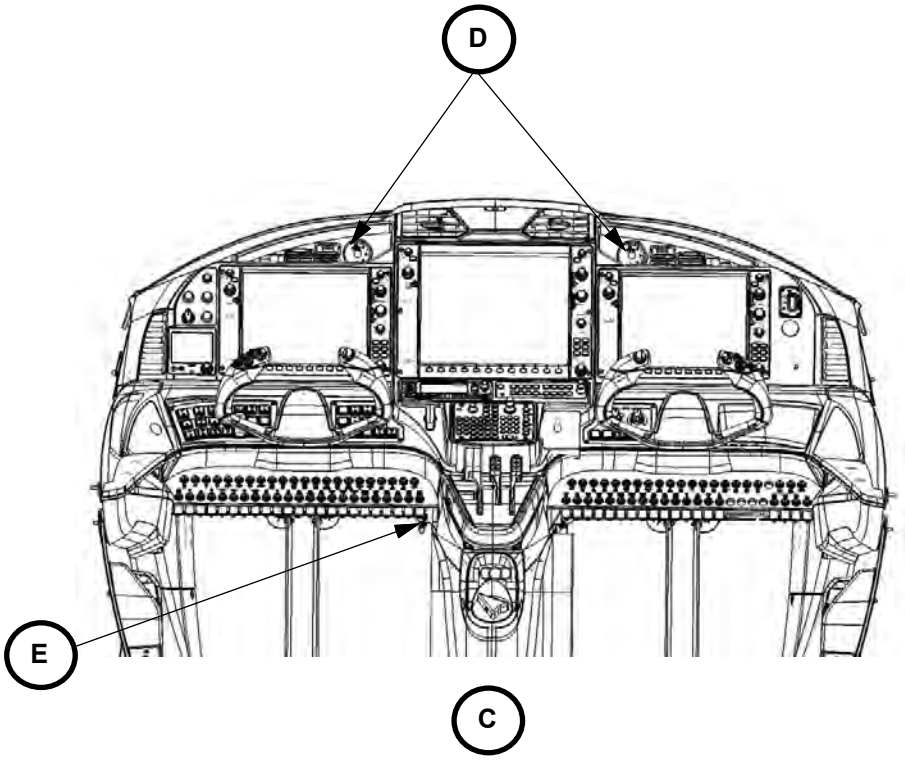

Figure 31-20.1: Stall Prevention System (Continued)

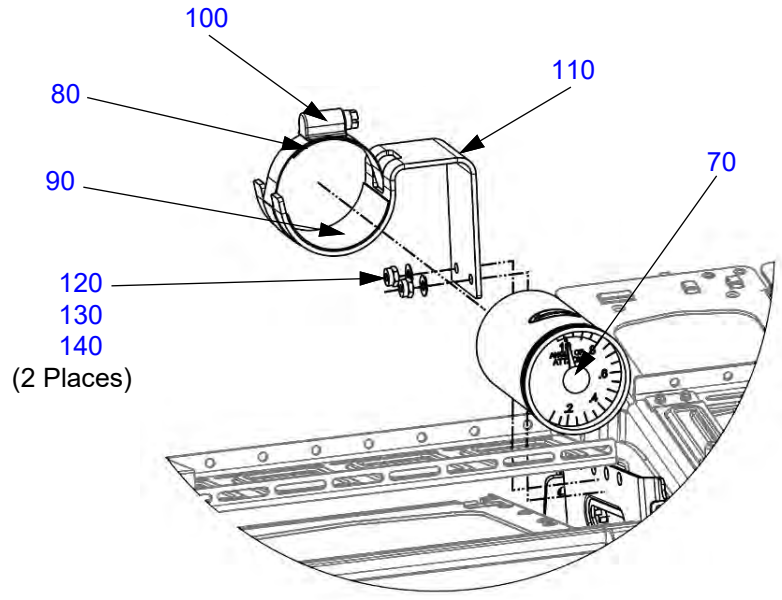

D
(TYPICAL)

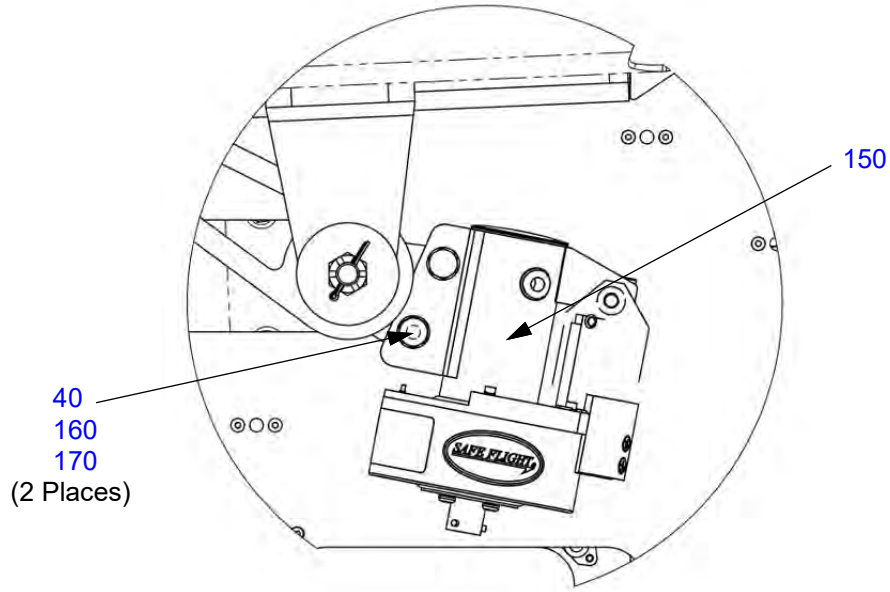

E

Table 31-20.1: Stall Prevention System

Figure Item Number	Part Number	Part Name	Effectivity Code	Amount in Assy.
10	C-101506-5	Lift Computer	K003 and On	2
20	PK31000001	Shelf, Lift Computers	K003 and On	1
30	AN3-3A	Bolt, 10-32 x 15/32" Undrilled	K003 and On	14
40	NAS1149F0332P	Washer, Flat #10 x .032	K003 and On	18
50	C-101507-1	Safe Flight Lift Transducer	K003 and On	2
60	MS24693-C28	Screw, Machine, C'sunk, CRES Ø .138 x 0.500	K003 and On	8
70	TR-1-EP-1 BASE CFG102	AOA Indicator	K003 and On	2
80	PK99007057	Wear Strip, Top AOA Gauge	K003 and On	2
90	PK99007058	Wear Strip, Bottom AOA Gauge	K003 and On	2
100	MS35842-13	Clamp, Hose	K003 and On	2
110	PK39000011	AOA Bracket, Instrument Panel	K003 and On	2
120	NAS1352-08-10P	Screw, Socket Head .164-32 x .625	K003 and On	4
130	NAS1149FN816P	Washer, Flat #8 x .016	K003 and On	8
140	MS21044N08	Nut, Self-locking, Steel .164-32	K003 and On	4
150	C-101502-3	Safe Flight Shaker	K003 and On	1
160	AN3-13A	Bolt, 10-32 x 1-13/32" Undrilled	K003 and On	2
170	MS21044N3	Nut, Self-locking, Steel 10-32	K003 and On	2

CHAPTER
32

Landing Gear

This Page Intentionally Left Blank

Table of Contents
and
List of Effective Pages

Chapter/Section	Page Number	Effective Date
32-Title	Page 1	03 Apr 2020
32-Title	Page 2	03 Apr 2020
32-LOEP	Page 1	26 Mar 2024
32-LOEP	Page 2	26 Mar 2024
32-LOEP	Page 3	14 Jul 2021
32-LOEP	Page 4	03 Apr 2020
32-TOC	Page 1	03 Apr 2020
32-TOC	Page 2	13 Jan 2023
Main Gear and Doors		
32-10	Page 1	03 Apr 2020
32-10	Page 2	03 Apr 2020
32-10	Page 3	03 Apr 2020
32-10	Page 4	03 Apr 2020
32-10	Page 5	13 Jan 2023
32-10	Page 6	03 Apr 2020
32-10	Page 7	03 Apr 2020
32-10	Page 8	03 Apr 2020
32-10	Page 9	03 Apr 2020
32-10	Page 10	03 Apr 2020
Nose Gear and Doors		
32-20	Page 1	14 Jul 2021
32-20	Page 2	14 Jul 2021
32-20	Page 3	14 Jul 2021
32-20	Page 4	03 Apr 2020
32-20	Page 5	13 Jan 2023
32-20	Page 6	13 Jan 2023
32-20	Page 7	13 Jan 2023
32-20	Page 8	03 Apr 2020
32-20	Page 9	03 Apr 2020
32-20	Page 10	03 Apr 2020
32-20	Page 11	03 Apr 2020
32-20	Page 12	03 Apr 2020
32-20	Page 13	03 Apr 2020
32-20	Page 14	03 Apr 2020
32-20	Page 15	03 Apr 2020
32-20	Page 16	03 Apr 2020

Extension and Retraction

32-30 ..... Page 1 ..... 14 Jul 2021
32-30 ..... Page 2 ..... 03 Apr 2020
32-30 ..... Page 3 ..... 14 Jul 2021
32-30 ..... Page 4 ..... 13 Jan 2023
32-30 ..... Page 5 ..... 03 Apr 2020
32-30 ..... Page 6 ..... 13 Jan 2023
32-30 ..... Page 7 ..... 03 Apr 2020
32-30 ..... Page 8 ..... 03 Apr 2020
32-30 ..... Page 9 ..... 13 Jan 2023
32-30 ..... Page 10 ..... 13 Jan 2023
32-30 ..... Page 11 ..... 13 Jan 2023
32-30 ..... Page 12 ..... 03 Apr 2020
32-30 ..... Page 13 ..... 14 Jul 2021
32-30 ..... Page 14 ..... 26 Mar 2024
32-30 ..... Page 15 ..... 26 Mar 2024
32-30 ..... Page 16 ..... 26 Mar 2024
32-30 ..... Page 17 ..... 26 Mar 2024
32-30 ..... Page 18 ..... 26 Mar 2024
32-30 ..... Page 19 ..... 26 Mar 2024
32-30 ..... Page 20 ..... 26 Mar 2024

Wheels and Brakes

32-40 ..... Page 1 ..... 03 Apr 2020
32-40 ..... Page 2 ..... 13 Jan 2023
32-40 ..... Page 3 ..... 03 Apr 2020
32-40 ..... Page 4 ..... 03 Apr 2020
32-40 ..... Page 5 ..... 03 Apr 2020
32-40 ..... Page 6 ..... 03 Apr 2020
32-40 ..... Page 7 ..... 03 Apr 2020
32-40 ..... Page 8 ..... 03 Apr 2020
32-40 ..... Page 9 ..... 13 Jan 2023
32-40 ..... Page 10 ..... 03 Apr 2020
32-40 ..... Page 11 ..... 14 Jul 2021
32-40 ..... Page 12 ..... 14 Jul 2021
32-40 ..... Page 13 ..... 14 Jul 2021
32-40 ..... Page 14 ..... 14 Jul 2021
32-40 ..... Page 15 ..... 13 Jan 2023
32-40 ..... Page 16 ..... 14 Jul 2021
32-40 ..... Page 17 ..... 14 Jul 2021
32-40 ..... Page 18 ..... 03 Apr 2020
32-40 ..... Page 19 ..... 03 Apr 2020
32-40 ..... Page 20 ..... 03 Apr 2020

Steering

32-50 ..... Page 1 ..... 03 Apr 2020
32-50 ..... Page 2 ..... 03 Apr 2020
32-50 ..... Page 3 ..... 03 Apr 2020
32-50 ..... Page 4 ..... 03 Apr 2020
32-50 ..... Page 5 ..... 03 Apr 2020
32-50 ..... Page 6 ..... 03 Apr 2020

Positioning, Warning, and Ground Safety Switch

32-60 ..... Page 1 ..... 03 Apr 2020
32-60 ..... Page 2 ..... 03 Apr 2020
32-60 ..... Page 3 ..... 03 Apr 2020
32-60 ..... Page 4 ..... 03 Apr 2020
32-60 ..... Page 5 ..... 03 Apr 2020
32-60 ..... Page 6 ..... 03 Apr 2020

This Page Intentionally Left Blank

CHAPTER 32

Table of Contents

List of Effective Pages ..... 32-LOEP / Page 1
Table of Contents ..... 32-TOC / Page1

Paragraph **Page Number**

Main Gear and Doors

Figure 32-10.1: Main Landing Gear Assembly ..... 32-10 / Page 1
Table 32-10.1: Main Landing Gear Assembly ..... 32-10 / Page 5
Figure 32-10.2: Main Landing Gear Doors ..... 32-10 / Page 6
Table 32-10.2: Main Landing Gear Door ..... 32-10 / Page 9

Nose Gear and Doors

Figure 32-20.1: Nose Landing Gear ..... 32-20 / Page 1
Table 32-20.1: Nose Landing Gear ..... 32-20 / Page 3
Figure 32-20.2: Nose Landing Gear Strut ..... 32-20 / Page 4
Table 32-20.2: Nose Landing Gear Strut ..... 32-20 / Page 6
Figure 32-20.3: Nose Wheel Steering Damper ..... 32-20 / Page 8
Table 32-20.3: Nose Wheel Steering Damper ..... 32-20 / Page 9
Figure 32-20.4: Nose Gear Doors ..... 32-20 / Page 10
Table 32-20.4: Nose Gear Doors ..... 32-20 / Page 12
Figure 32-20.5: Blast Shield ..... 32-20 / Page 13
Table 32-20.5: Blast Shield ..... 32-20 / Page 15

Extension and Retraction

Figure 32-30.1: Actuator Attachment - Nose Gear ..... 32-30 / Page 1
Table 32-30.1: Actuator Attachment - Nose Gear ..... 32-30 / Page 3
Figure 32-30.2: Actuator Attachment - Main Gear ..... 32-30 / Page 4
Table 32-30.2: Actuator Attachment - Main Gear ..... 32-30 / Page 6
Figure 32-30.3: Landing Gear Uplock, Nose Landing Gear ..... 32-30 / Page 7
Table 32-30.3: Landing Gear Uplock, Nose Landing Gear ..... 32-30 / Page 8
Figure 32-30.4: Landing Gear Uplock, Main Landing Gear ..... 32-30 / Page 9
Table 32-30.4: Landing Gear Uplock, Main Landing Gear ..... 32-30 / Page 11
Figure 32-30.5: Nose and Main Landing Gear Upstops ..... 32-30 / Page 12
Table 32-30.5: Nose and Main Landing Gear Upstops ..... 32-30 / Page 15
Figure 32-30.6: Landing Gear Switch (SN: K003-K010) ..... 32-30 / Page 16
Table 32-30.6: Landing Gear Switch (SN: K003-K010) ..... 32-30 / Page 17

Figure 32-30.7: Landing Gear Switch (SN: K011 and On and SN:K003-K010 with SB-0017) 32-30 / Page 18
Table 32-30.7: Landing Gear Switch (SN: K011 and On and SN:K003-K010 with SB-0017). 32-30 / Page 19

Wheels and Brakes

Figure 32-40.1: Main Wheels ..... 32-40 / Page 1
Table 32-40.1: Main Wheels ..... 32-40 / Page 2
Figure 32-40.2: Nose Wheel ..... 32-40 / Page 3
Table 32-40.2: Nose Wheel ..... 32-40 / Page 4
Figure 32-40.3: Brakes ..... 32-40 / Page 5
Table 32-40.3: Brakes ..... 32-40 / Page 6
Figure 32-40.4: Master Cylinders ..... 32-40 / Page 7
Table 32-40.4: Master Cylinders ..... 32-40 / Page 9
Figure 32-40.5: Brake Reservoir and Lines, Fuselage ..... 32-40 / Page 10
Table 32-40.5: Brake Reservoir and Lines, Fuselage *(Also SN:K003-K010 with SB-0017) .. 32-40 / Page 16
Figure 32-40.6: Brake Lines, Wings ..... 32-40 / Page 18
Table 32-40.6: Brake Lines, Wings ..... 32-40 / Page 21

Steering

Figure 32-50.1: Steering Assembly ..... 32-50 / Page 1
Table 32-50.1: Steering Assembly ..... 32-50 / Page 6

Positioning, Warning, and Ground Safety Switch

Figure 32-60.1: Main and Nose Gear Up Switches ..... 32-60 / Page 1
Table 32-60.1: Main and Nose Gear Up Switches ..... 32-60 / Page 3
Figure 32-60.2: Weight on Wheels Switch ..... 32-60 / Page 4
Table 32-60.2: Weight on Wheels Switch ..... 32-60 / Page 6

MAIN GEAR AND DOORS

Figure 32-10.1: Main Landing Gear Assembly

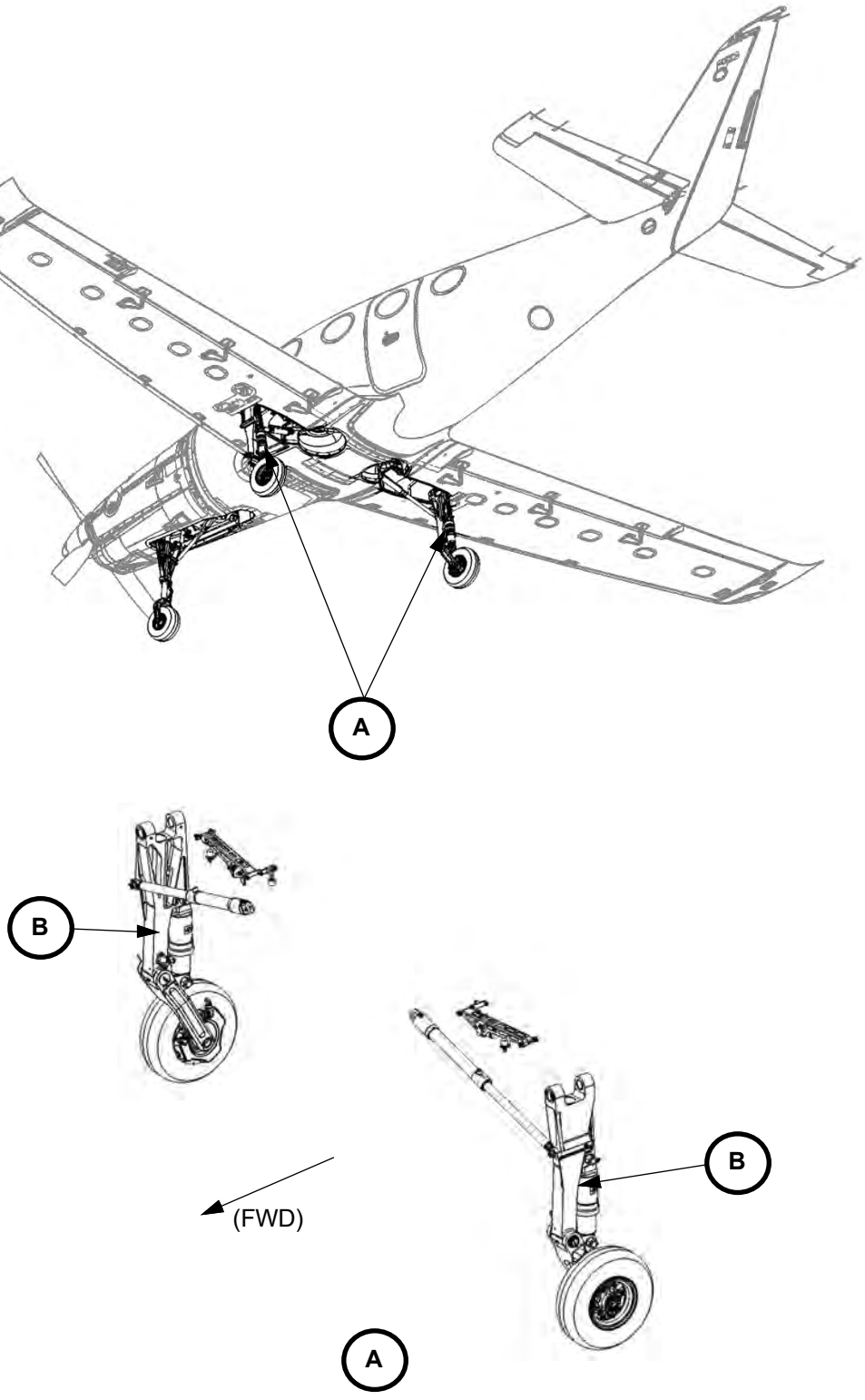

Figure 32-10.1: Main Landing Gear Assembly (Continued)

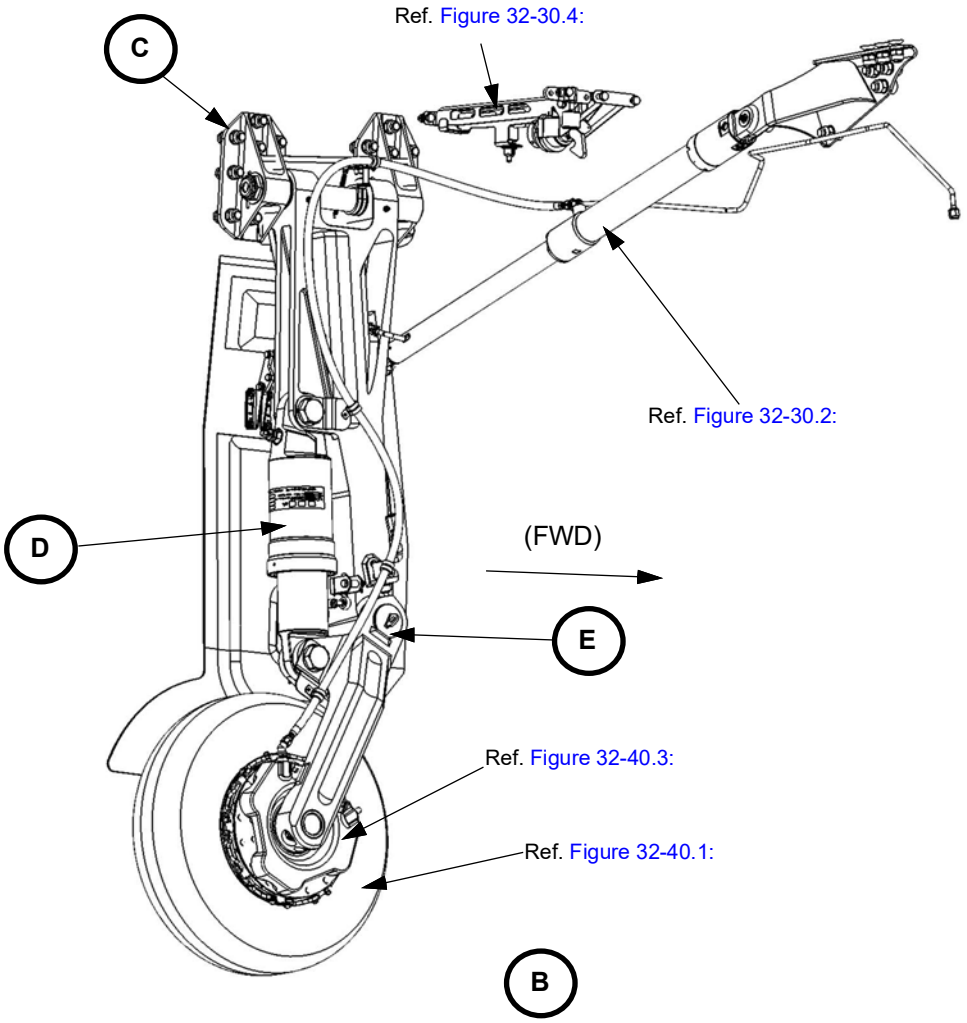

(Left side shown, right side opposite.)

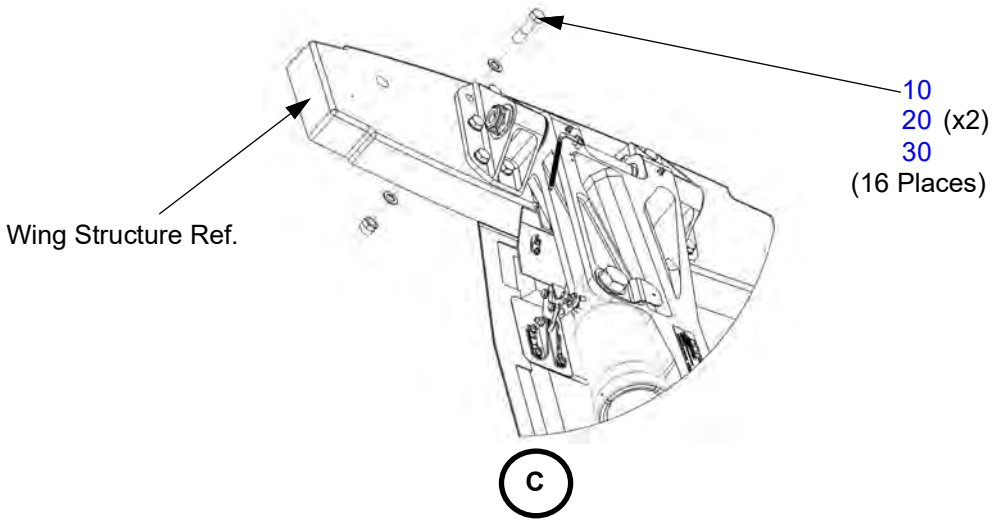

(Left side shown, right side opposite.)

Figure 32-10.1: Main Landing Gear Assembly (Continued)

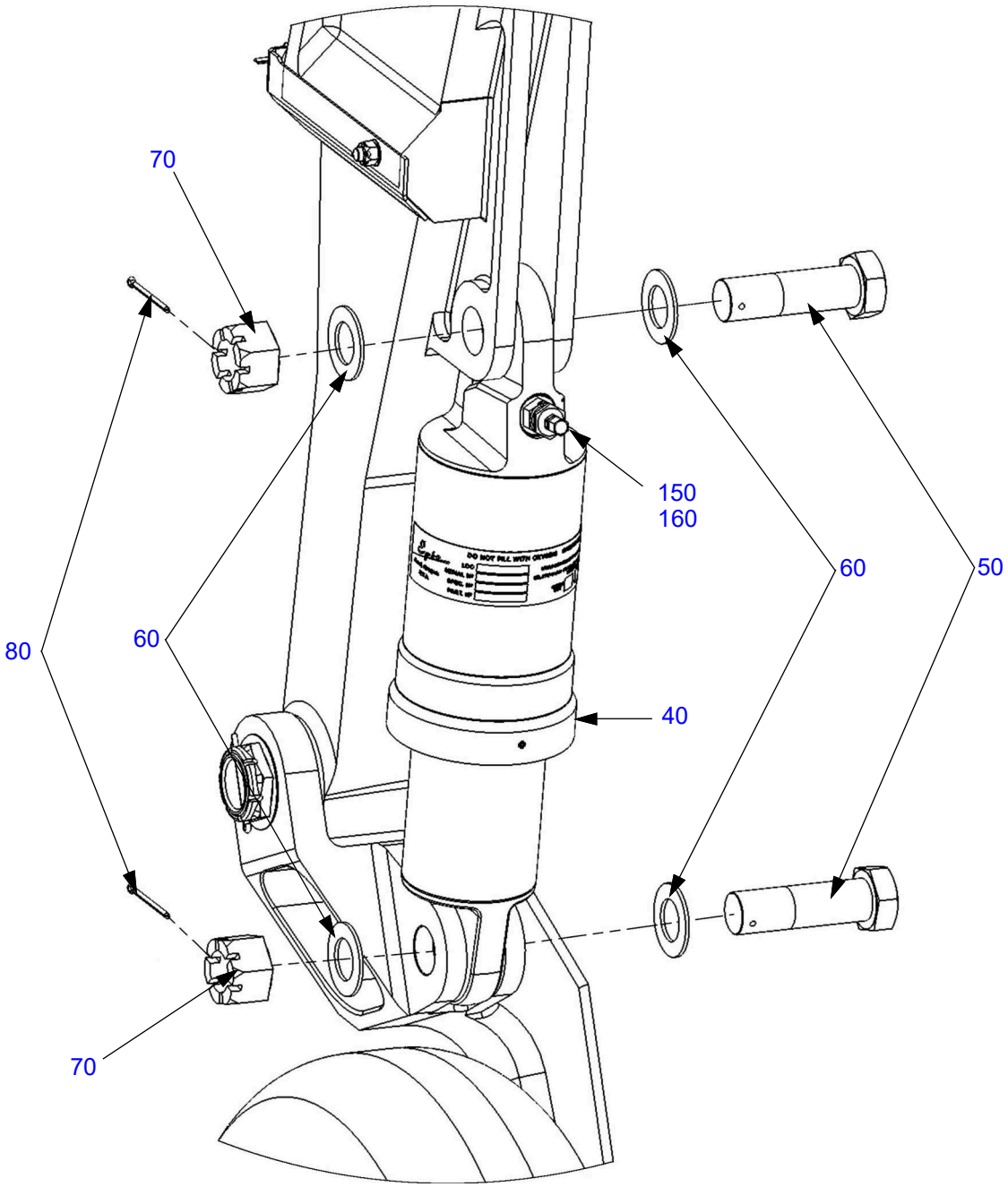

D

(Left side shown, right side opposite.)

Figure 32-10.1: Main Landing Gear Assembly (Continued)

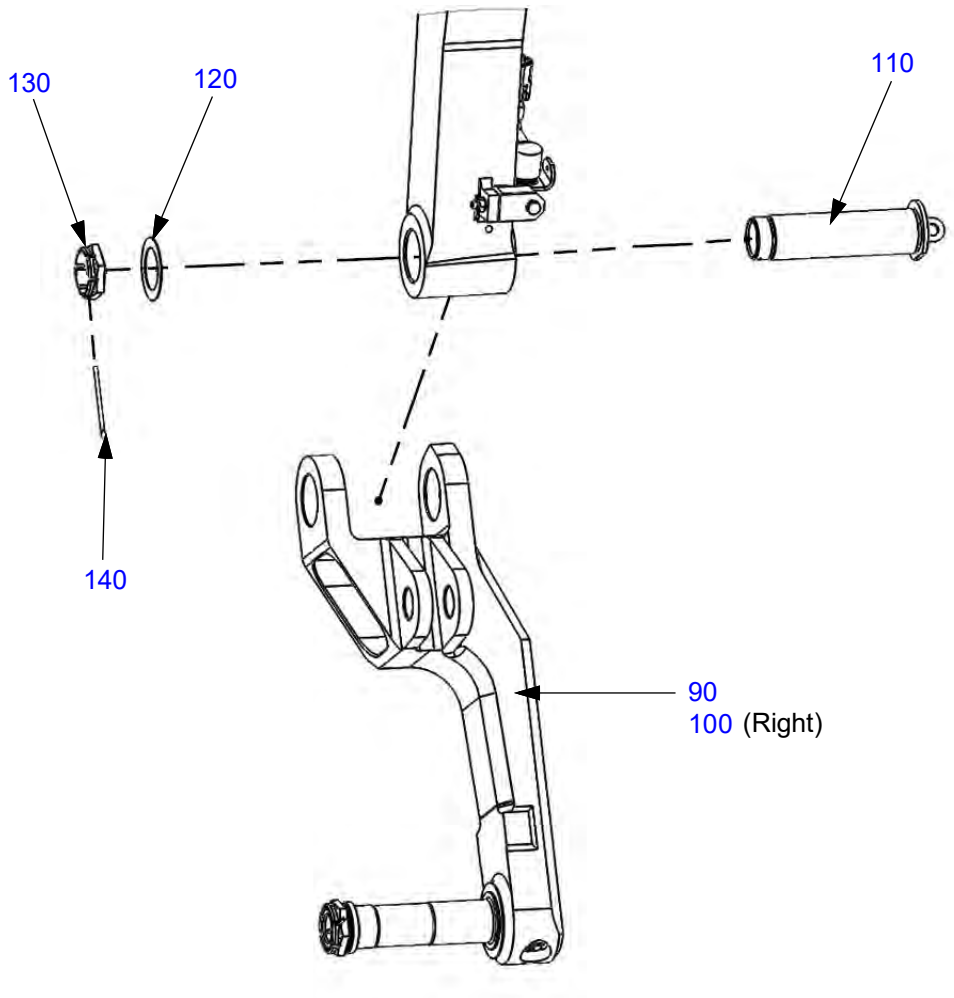

(Left side shown, right side opposite.)

Table 32-10.1: Main Landing Gear Assembly

Figure Item Number	Part Number	Part Name	Effectivity Code	Amount in Assy.
10	AN8-16A	Bolt, 1/2-20 x 1-27/32" Undrilled	K003 and On	32
20	NAS1149G0863P	Washer, Flat 1/2 x .063	K003 and On	64
30	MS21045L8	Nut, Self-locking, Steel 1/2-20	K003 and On	32
40	AK32101300 C	Damper Assy, MLG	K003 and On	2
50	PK32101009	Bolt, Damper Can, MLG	K003 and On	4
60	NAS1149F1632P	Washer, Flat 1 x .032	K003 and On	12
70	AN320-15	Nut, Castellated, Shear, Steel 1-12	K003 and On	4
80	MS24665-360	Pin, Cotter, Cad Steel Ø .125 x 2.00	K003 and On	4
90	AK32101200	Left Fork Assy, MLG	K003 and On	1
100	AK32102200	Right Fork Assy, MLG	K003 and On	1
110	PK32101004	Pin, Pivot, Bracket To Fork, MLG	K003 and On	2
120	NAS1149F2432P	Washer, Flat 1-1/2 x .032	K003 and On	2
130	MS21025-24	Nut, Castellated Ø 1.500-16	K003 and On	2
140	MS24665-361	Pin, Cotter, Cad Steel Ø .125 x 2.25	K003 and On	2
150	PK99005382	Valve, Air, High Pressure Charging	K003 and On	2
*	043617010	-	-	-
*	AN6287-4000	-	-	-
160	M83461/1-015	O-Ring, I.D 0.551", Thickness: 0.070"	K003 and On	2

*Alternate Part Number

Figure 32-10.2: Main Landing Gear Doors

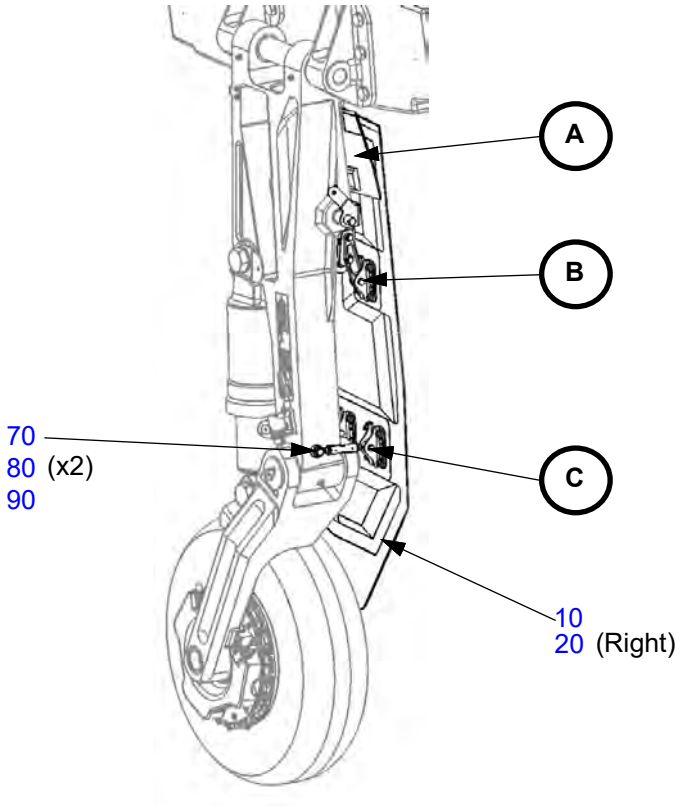

(Left side shown, right side opposite.)

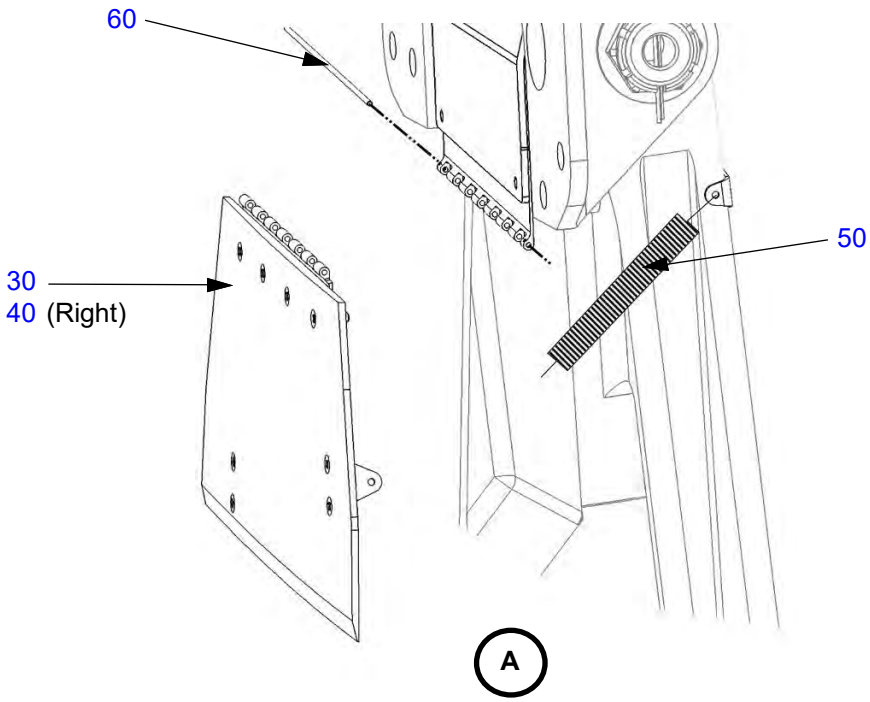

(Left side shown, right side opposite.)

Figure 32-10.2: Main Landing Gear Doors (Continued)

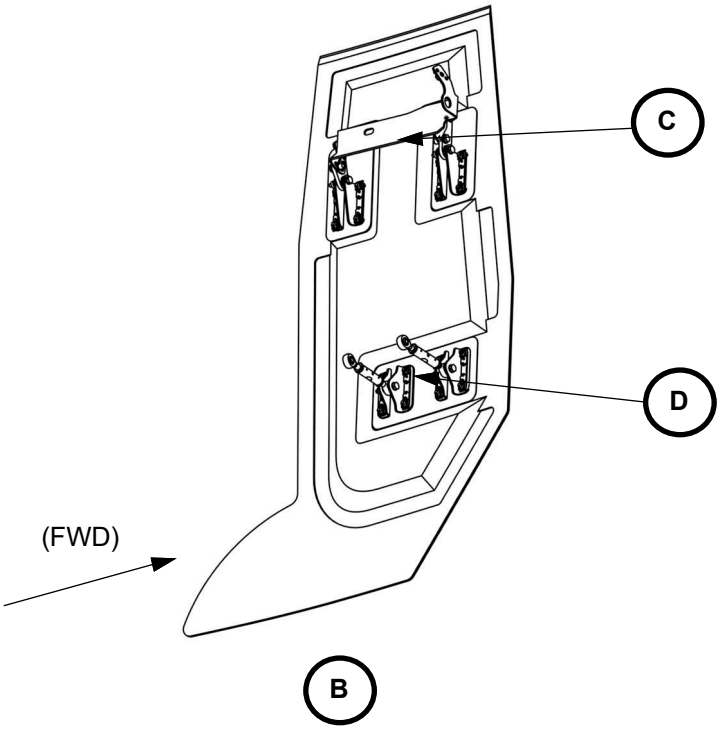

(Left side shown, right side opposite.)

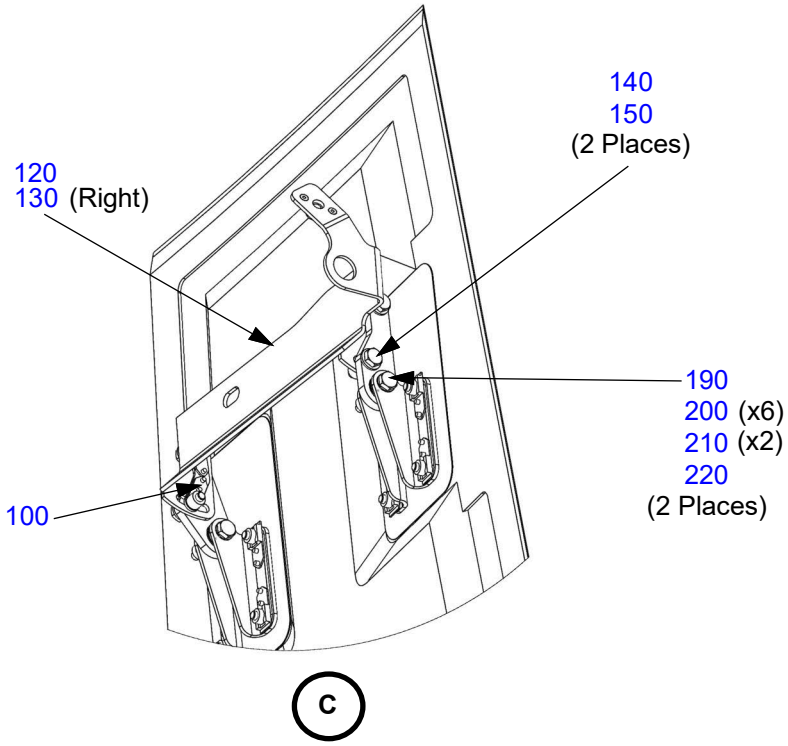

(Left side shown, right side opposite.)

Figure 32-10.2: Main Landing Gear Doors (Continued)

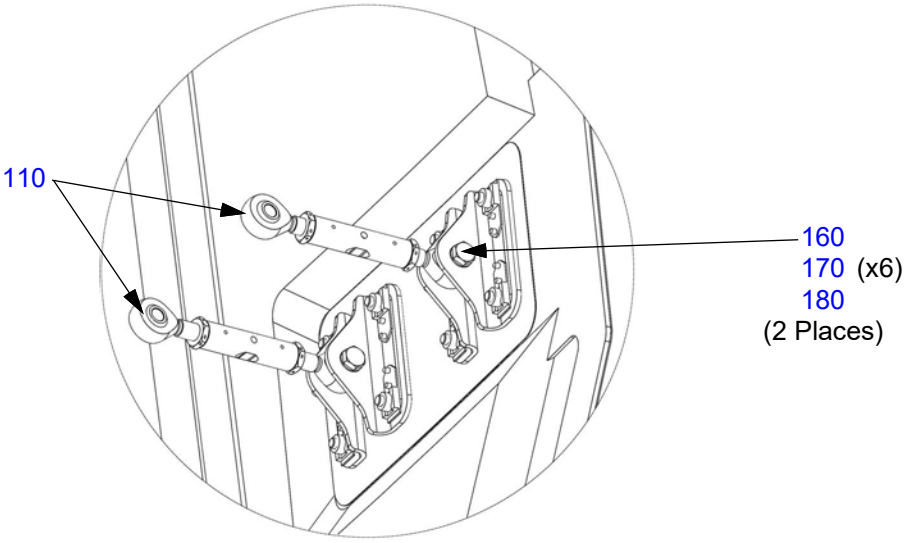

(Left side shown, right side opposite.)

Table 32-10.2: Main Landing Gear Door

Figure Item Number	Part Number	Part Name	Effectivity Code	Amount in Assy.
10	AK32103100	Assembly, MLG, Primary, Left	K003 and On	1
20	AK32103200	Assembly, MLG, Primary, Right	K003 and On	1
30	AK32103200	Assembly, Outboard MLG Door, Left	K003 and On	1
40	AK32104200	Assembly, Outboard MLG Door, Right	K003 and On	1
50	PK99006009	Spring, Extension, 3in L x .25 OD x 2.4 LB Per In	K003 and On	2
60	PK32104206	Pin, Hinge, MLG, Outboard	K003 and On	2
70	AN4-45A	Bolt, 1/4-28 x 4-21/32" Undrilled	K003 and On	2
80	NAS1149F0463P	Washer, Flat 1/4 x .063	K003 and On	12
90	MS21044N4	Nut, Self-locking, Steel 1/4-28	K003 and On	2
100	AK32104107	Assy, Backing Plate, Attch, MLG Door, Bent	K003 and On	4
110	AK32104108	Link Assy, Lower Attach - Main Door, MLG	K003 and On	4
120	AK32103130	Bracket, MLG Door, Attachment, Assembly, Left	K003 and On	1
130	AK32104130	Bracket, MLG Door, Attachment, Assembly, Right	K003 and On	1
140	AN3-6A	Bolt, 10-32 x 25/32" Undrilled	K003 and On	8
150	MS27183-42	Washer, Flat, .219 ID x .500 OD x .049	K003 and On	8
160	AN3-12A	Bolt, 10-32 x 1-9/32" Undrilled	K003 and On	4
170	NAS1149F0332P	Washer, Flat #10 x .032	K003 and On	24
180	MS21044N3	Nut, Self-locking, Steel 10-32	K003 and On	4
190	AN3-11A	Bolt, 10-32 x 1-5/32" Undrilled	K003 and On	4
200	NAS1149F0332P	Washer, Flat #10 x .032	K003 and On	24
210	NAS1149F0363P	Washer, Flat #10 x .063	K003 and On	8
220	MS21044N3	Nut, Self-locking, Steel 10-32	K003 and On	4

This Page Intentionally Left Blank

NOSE GEAR AND DOORS

Figure 32-20.1: Nose Landing Gear

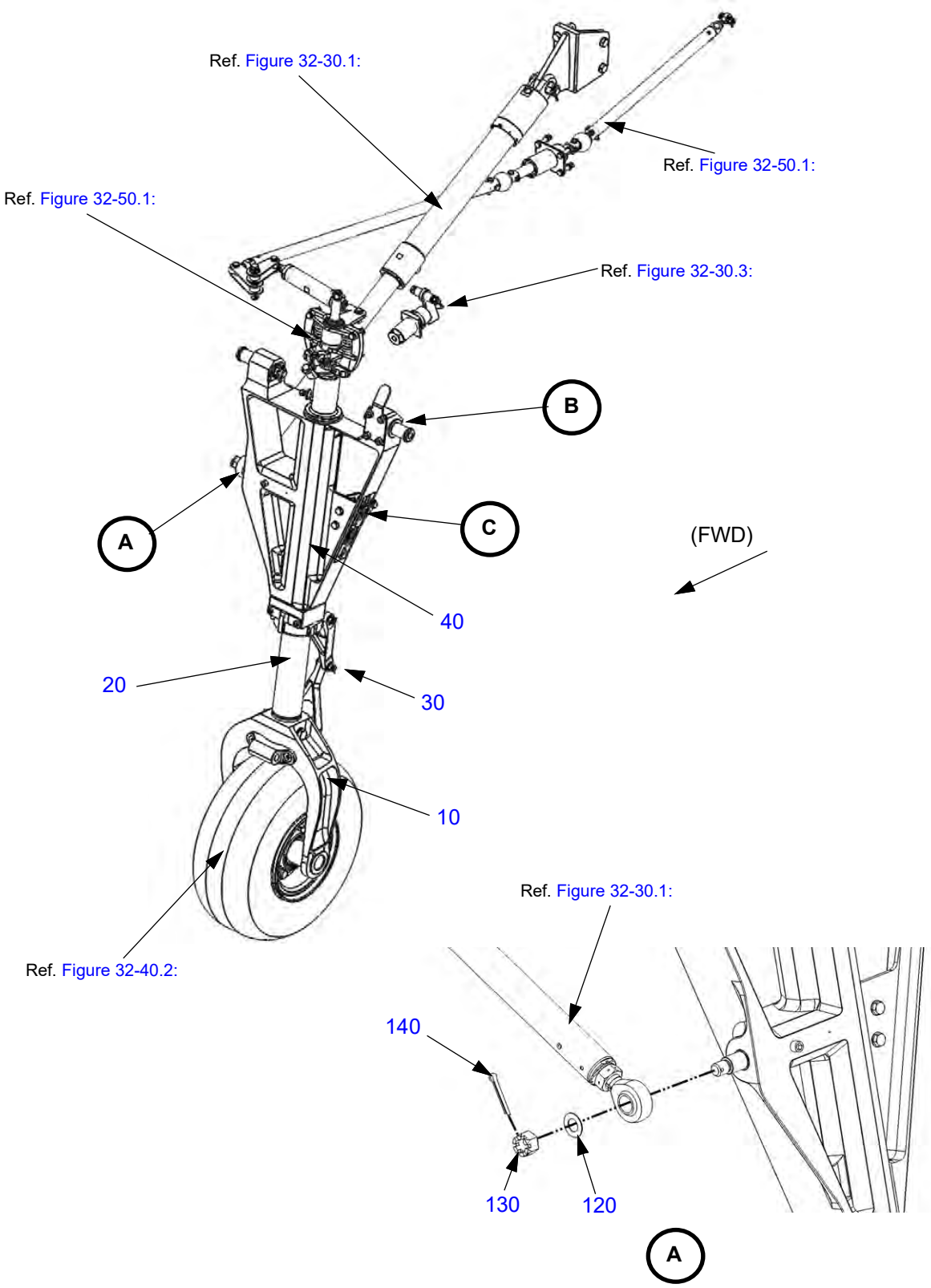

Figure 32-20.1: Nose Landing Gear (Continued)

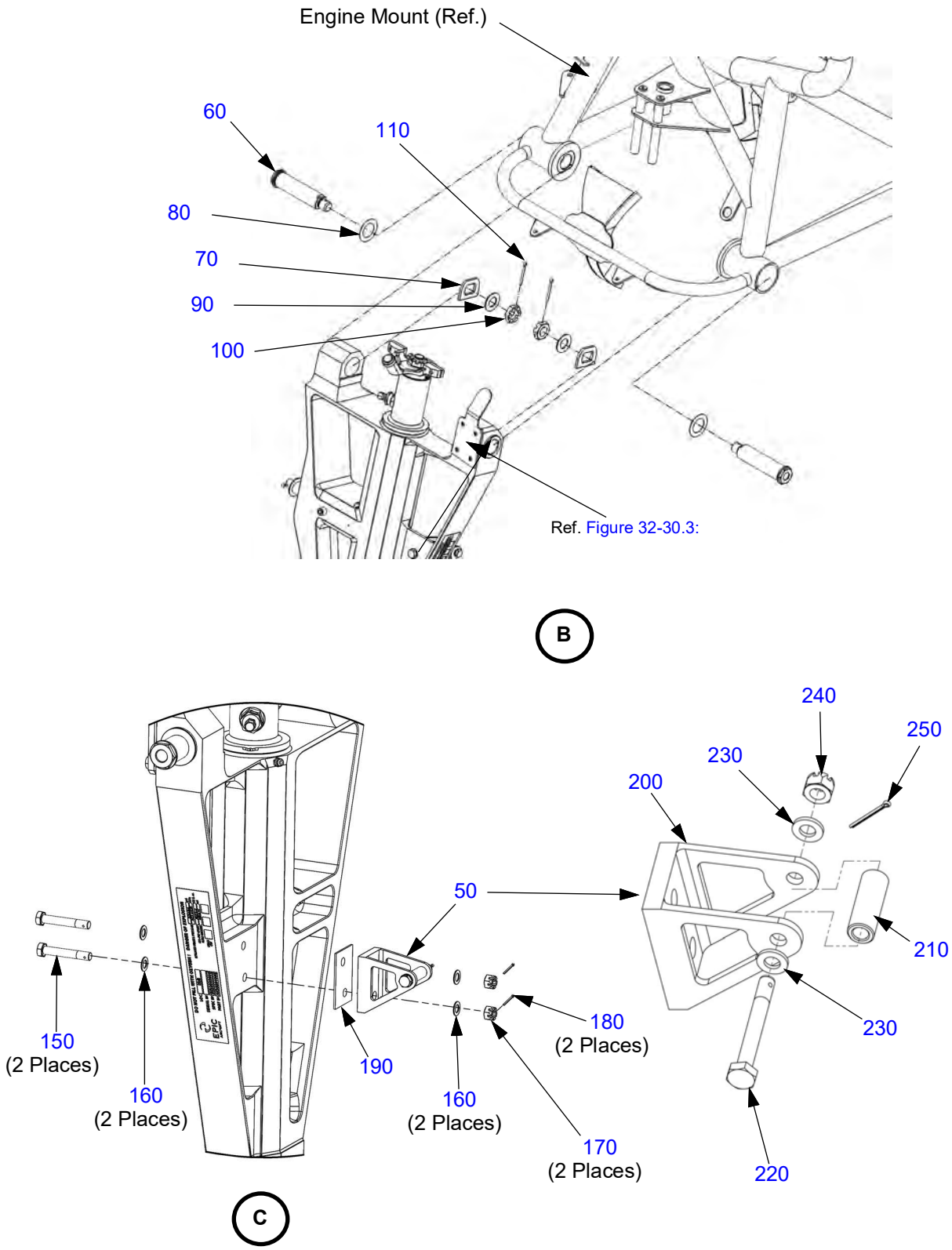

Table 32-20.1: Nose Landing Gear

Figure Item Number	Part Number	Part Name	Effectivity Code	Amount in Assy.
10	AK32201100	Fork And Piston Rod Assy, NLG	K003 and On	1
20	PK32201101	Piston Rod, NLG	K003 and On	1
30	AK32201500	Scissors Assy, NLG	K003 and On	2
40	AK32201300	Housing Assy, NLG	K003 and On	1
50	AK32201600	Assy, Uplock, Receiver, NLG	K003 and On	1
60	PK32201015	Pin, Suspension	K003 and On	2
70	PK32201016	Washer, Pin, Suspension, NLG	K003 and On	2
80	PK32201017	Shim Washer, Pin, NLG	K003 and On	2
90	NAS1149F1063P	Washer, Flat 5/8 x .063	K003 and On	2
100	AN320-10	Nut, Castellated, Shear, Steel 5/8-18	K003 and On	3
110	MS24665-421	Pin, Cotter, Cad Steel Ø .156 x 1.25	K003 and On	3
120	NAS1149F0932P	Washer, Flat 9/16 x .032	K003 and On	1
130	AN310-9	Nut, Castellated, Steel 9/16-18	K003 and On	1
140	MS24665-355	Pin, Cotter, Cad Steel Ø .125 x 1.25	K003 and On	1
150	AN5-17	Bolt, 5/16-24 x 1-31/32" Drilled Shank	K003 and On	2
160	NAS1149F0532P	Washer, Flat 5/16 x .032	K003 and On	4
170	AN310-5	Nut, Castellated, Steel 5/16-24	K003 and On	2
180	MS24665-134	Pin, Cotter, Cad Steel Ø .062 x .75	K003 and On	2
190	PK32201604	Shim, .125 Thick, Uplock Bracket, NLG	K003 and On	AR
200	PK32201601	Bracket, Receiver, NLG	K003 and On	1
210	PK32201603	Sleeve, Receiver, NLG	K003 and On	1
220	AN4-20	Bolt, 1/4-28 x 2-1/32" Drilled Shank	K003 and On	1
230	NAS1149F0463P	Washer, Flat 1/4 x .063	K003 and On	2
240	AN310-4	Nut, Castellated, Steel 1/4-28	K003 and On	1
250	MS24665-134	Pin, Cotter, Cad Steel Ø .062 x .75	K003 and On	1

Figure 32-20.2: Nose Landing Gear Strut

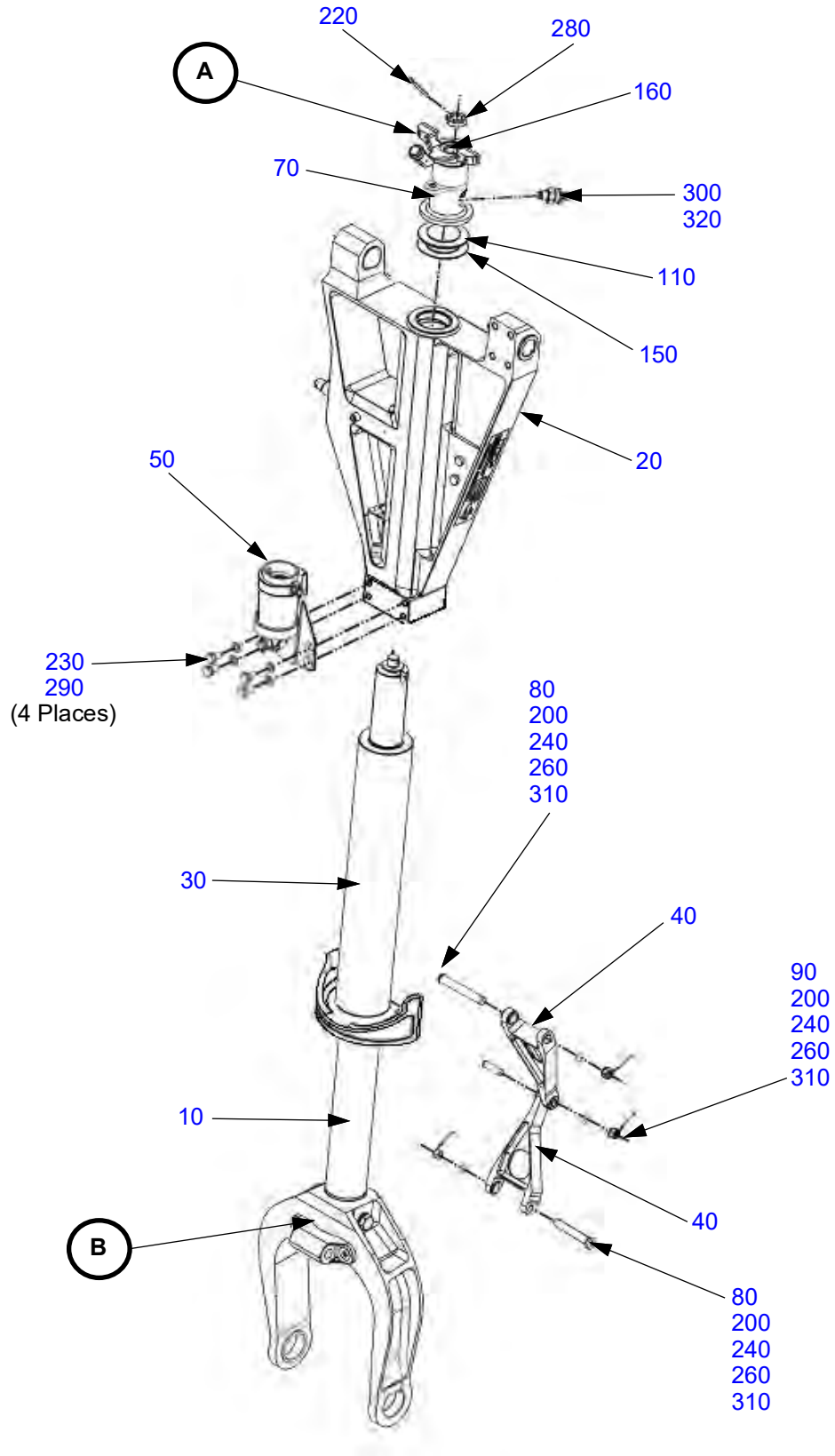

Figure 32-20.2: Nose Landing Gear Strut (Continued)

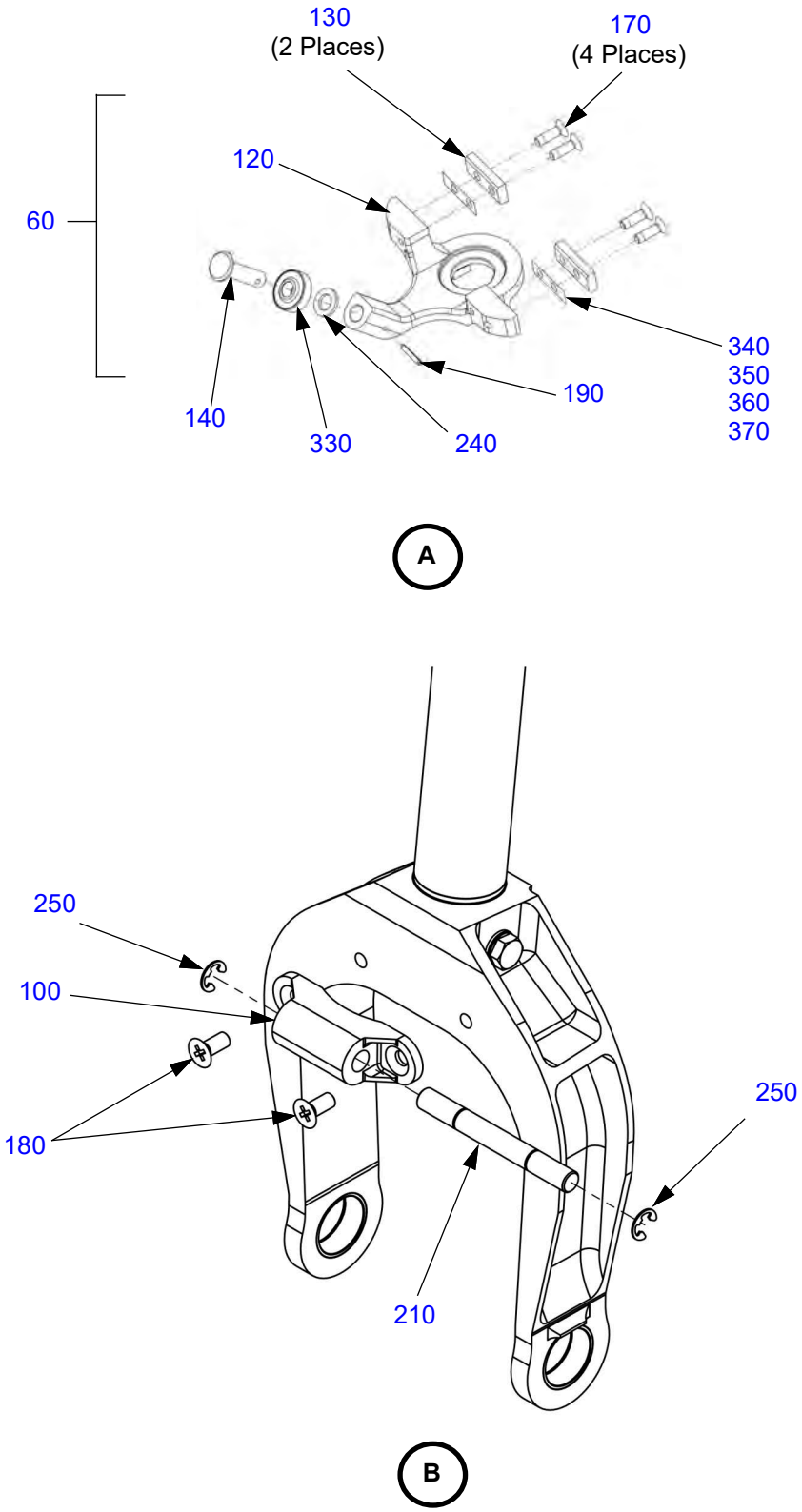

Table 32-20.2: Nose Landing Gear Strut

Figure Item Number	Part Number	Part Name	Effectivity Code	Amount in Assy.
10	AK32201100	Fork And Piston Rod Assy, NLG	K003 and On	1
20	AK32201300	Housing Assy, NLG	K003 and On	1
30	AK32201400	Cylinder Assy, NLG	K003 and On	1
40	AK32201500	Scissors Assy, NLG	K003 and On	2
50	AK32201900	Nose Wheel Centering Device, NLG	K003 and On	1
60	AK32203000	Steering Arm Assy, NLG	K003 and On	1
70	AK32206000	Distance Piece Assy, NLG	K003 and On	1
80	PK32201010	Big Pin, Scissors, NLG	K003 and On	2
90	PK32201011	Small Pin, Scissors, NLG	K003 and On	1
100	PK32201012	Towbar Hitch, NLG	K003 and On	1
110	PK32201013	Distance Ring, NLG	K003 and On	1
120	PK32203001	Steering Arm, NLG	K003 and On	1
130	PK32203002	Pad, Contact, Steering Arm, NLG	K003 and On	2
140	PK32203003	Bearing Pin, Steering Arm, NLG	K003 and On	1
150	PK99001001	Slip Ring, NLG	K003 and On	1
160	PK99005021	O-Ring, NLG	K003 and On	1
170	MS24694-C51	Screw, Machine, C'sunk, CRES Ø .190 x 19/32	K003 and On	4
180	MS24694-S188	Screw, Machine, C'sunk Ø .375 x 27/32	K003 and On	2
190	MS16562-215	Pin, Spring, CRES Ø .094 x 0.625	K003 and On	1
200	MS24665-134	Pin, Cotter, Cad Steel Ø .062 x .75	K003 and On	5
210	PK32000001	Pin, Tow Bar, NLG	K003 and On	1
220	MS24665-421	Pin, Cotter, Cad Steel Ø .156 x 1.25	K003 and On	3
230	NAS1149F0516P	Washer, Flat 5/16 x .016	K003 and On	4
240	NAS1149F0563P	Washer, Flat 5/16 x .063	K003 and On	3
250	MS3215-1050	External E-type Retaining Rings	K003 and On	2

Figure Item Number	Part Number	Part Name	Effectivity Code	Amount in Assy.
260	AN310-5	Nut, Castellated, Steel 5/16-24	K003 and On	5
270	Deleted			
280	AN320-10	Nut, Castellated, Shear, Steel 5/8-18	K003 and On	1
290	AN5H4A	Bolt, 5/16-24 x 19/32" Drilled Head	K003 and On	4
300	M83461/A-015	O-Ring, I.D 0.551", Thickness: 0.070"	K003 and On	1
310	MS15001-1	Fitting, Lubrication, Straight 1/4-28 x 1/2	K003 and On	3
320	PK99005382	Valve, Air, High Pressure Charging	K003 and On	1
*	043617010	-	-	-
*	AN6287-4000	-	-	-
330	MS27641-5	Bearing, Ball, Intermediate Duty .313 ID x .813 OD	K003 and On	1
340	PK32203004	Shim, .019 Thick, Steering Arm, NLG	K003 and On	A/R
350	PK32203005	Shim, .031 Thick, Steering Arm, NLG	K003 and On	A/R
360	PK32203006	Shim, .050 Thick, Steering Arm, NLG	K003 and On	A/R
370	PK32203007	Shim, .090 Thick, Steering Arm, NLG	K003 and On	A/R

*Alternate Part Number

Figure 32-20.3: Nose Wheel Steering Damper

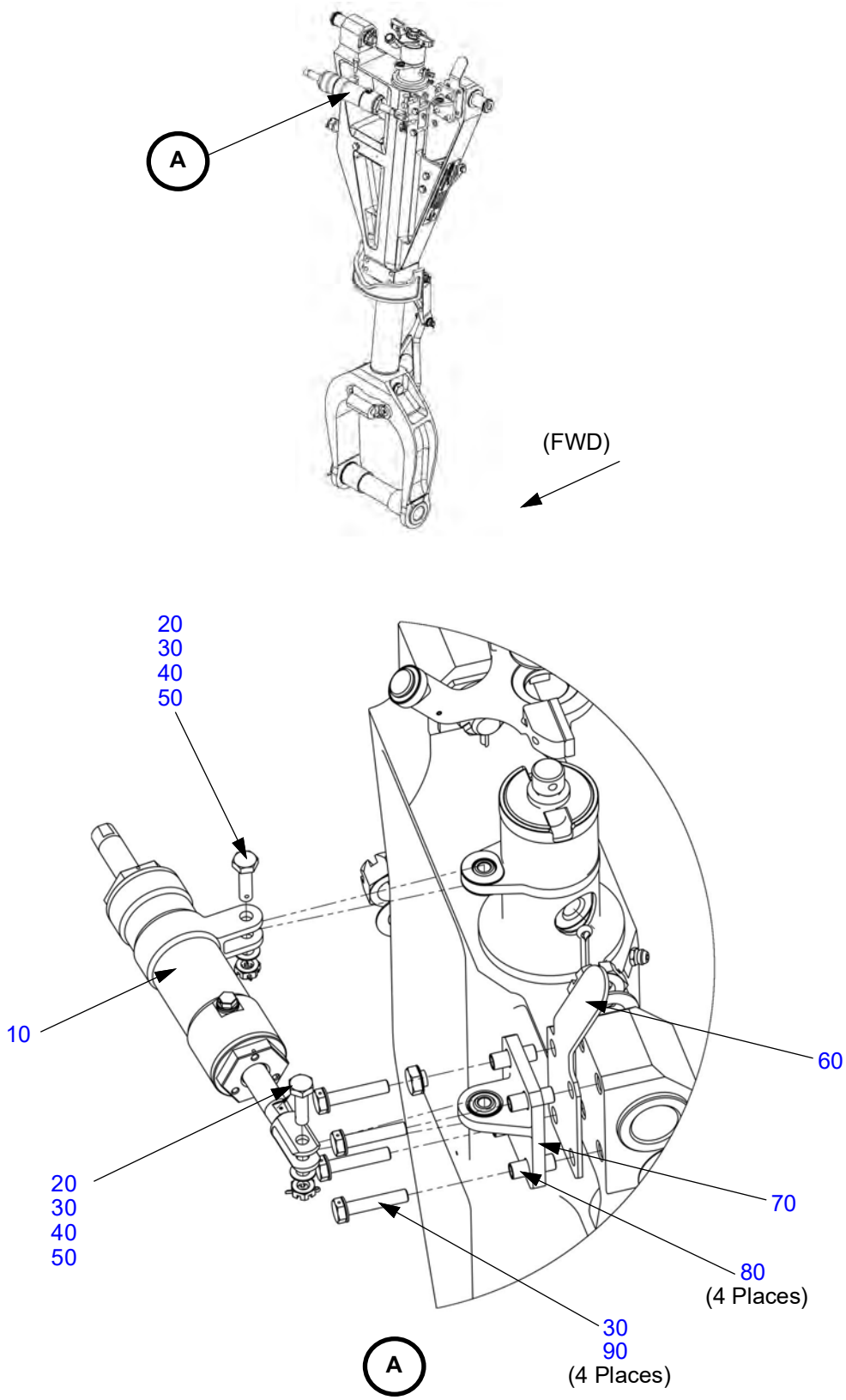

Table 32-20.3: Nose Wheel Steering Damper

Figure Item Number	Part Number	Part Name	Effectivity Code	Amount in Assy.
10	AK32207000	Damper Assembly, Steering, NLG	K003 and On	1
20	AN4-7	Bolt, 1/4-28 x 29/32" Drilled Shank	K003 and On	2
30	NAS1149F0432P	Washer, Flat 1/4 x .032	K003 and On	6
40	AN320-4	Nut, Castellated, Shear, Steel 1/4-28	K003 and On	2
50	MS24665-132	Pin, Cotter, Cad Steel Ø .062 x .50	K003 and On	2
60	PK32200001	Position Switch Plate, NLG	K003 and On	1
70	AK32206100	Bracket Assy, Shimmy Damper, NLG	K003 and On	1
80	PK32206005	Fastener Sleeve, Shimmy Damper, NLG	K003 and On	4
90	AN4H12A	Bolt, 1/4-28 x 1-9/32" Drilled Head	K003 and On	4

Figure 32-20.4: Nose Gear Doors

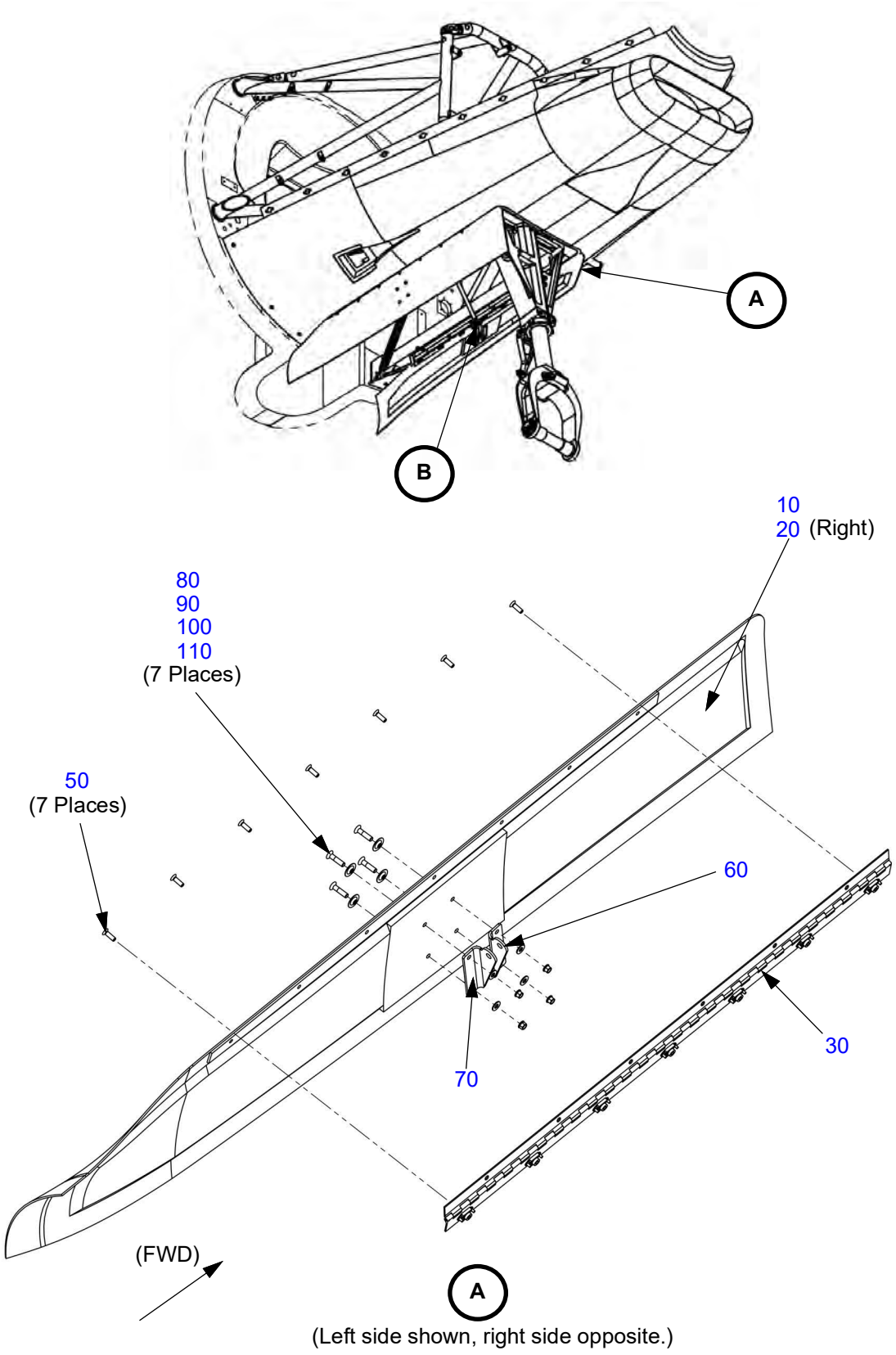

Figure 32-20.4: Nose Gear Doors (Continued)

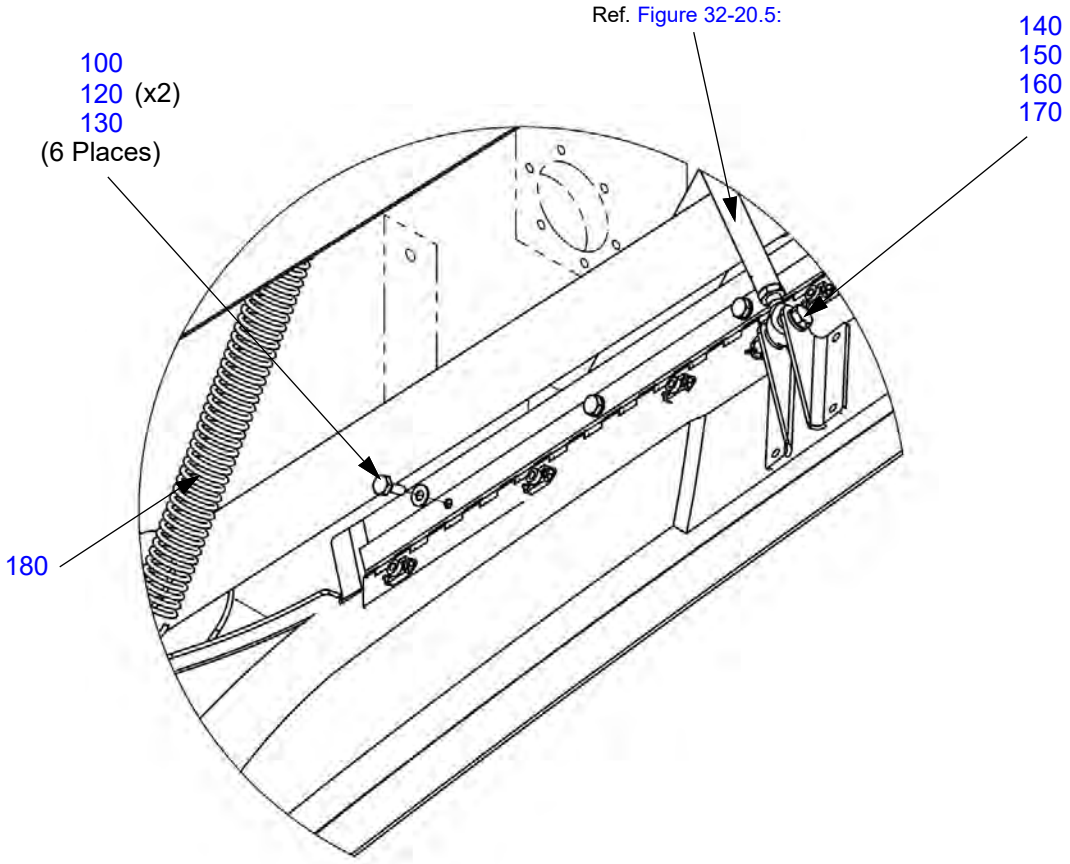

(Left side shown, right side opposite.)

Table 32-20.4: Nose Gear Doors

Figure Item Number	Part Number	Part Name	Effectivity Code	Amount in Assy.
10	PK32202501	Left Door, NLG	K003 and On	1
20	PK32202601	Right Door, NLG	K003 and On	1
30	AK32202400	Hinge, NLG Door	K003 and On	2
*40	PK32202403	Hinge Pin, NLG Door	K003 and On	2
50	MS24694-S5	Screw, Machine, C'sunk Ø .164 x 17/32	K003 and On	14
60	PK32202502	Right Push Rod Attach, NLG Door	K003 and On	2
70	PK32202503	Left Push Rod Attach, NLG Door	K003 and On	2
80	MS24694-S54	Screw, Machine, C'sunk Ø .190 x 25/32	K003 and On	8
90	NAS1169C10L	Washer, Dimpled, CRES No. 10 x .016	K003 and On	8
100	NAS1149F0332P	Washer, Flat #10 x .032	K003 and On	24
110	MS21043-3	Nut, Self-locking, 800°, Reduced #10-32	K003 and On	8
120	AN3-4A	Bolt, 10-32 x 17/32" Undrilled	K003 and On	12
130	MS21045L3	Nut, Self-locking, Steel 10-32	K003 and On	12
140	AN4-12	Bolt, 1/4-28 x 1-9/32" Drilled Shank	K003 and On	2
150	NAS1149F0463P	Washer, Flat 1/4 x .063	K003 and On	8
160	AN310-4	Nut, Castellated, Steel 1/4-28	K003 and On	2
170	MS24665-134	Pin, Cotter, Cad Steel Ø .062 x .75	K003 and On	2
180	PK99006012	Extension Spring, NLG Door	K003 and On	2

* Item not illustrated.

Figure 32-20.5: Blast Shield

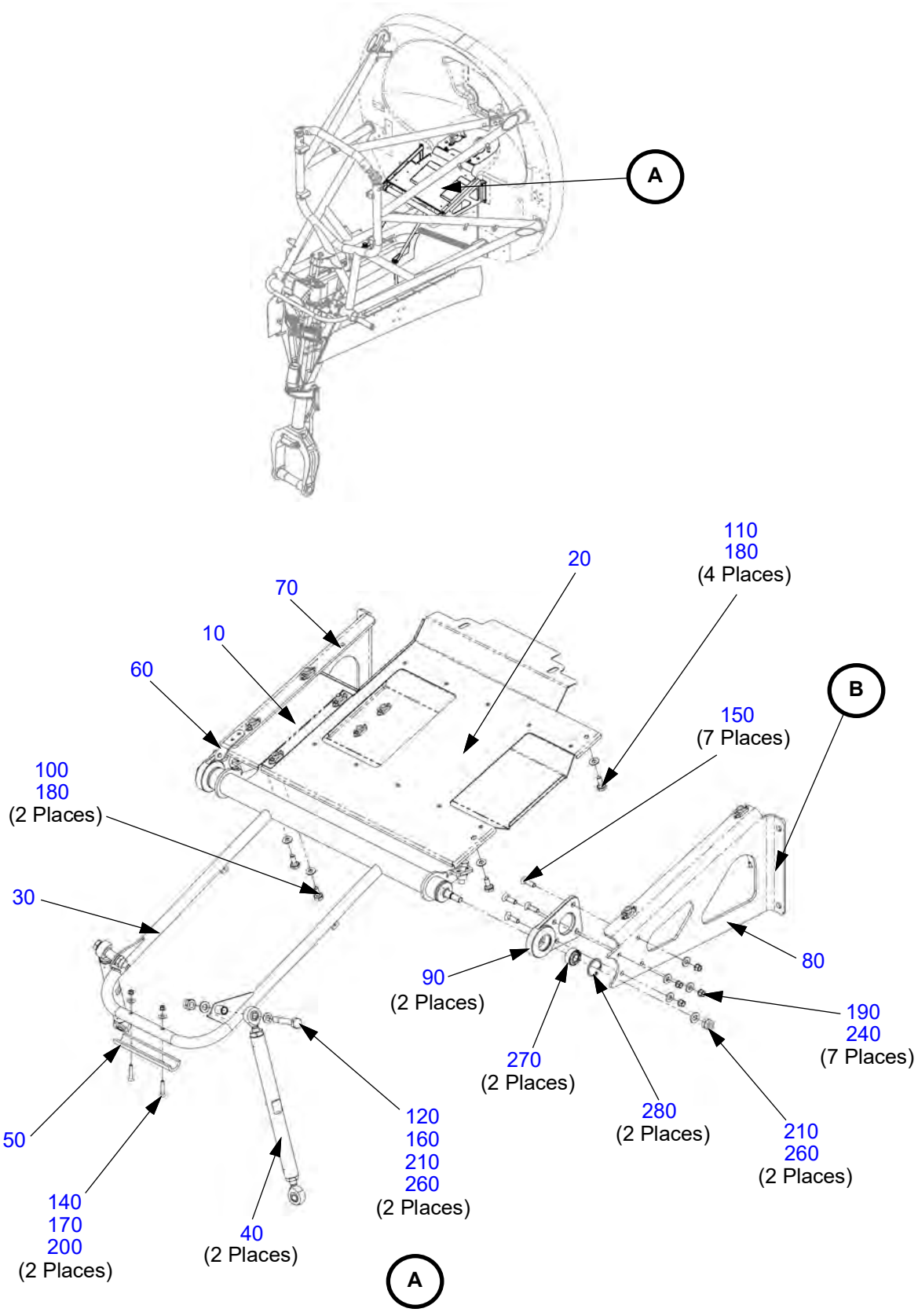

Figure 32-20.5: Blast Shield (Continued)

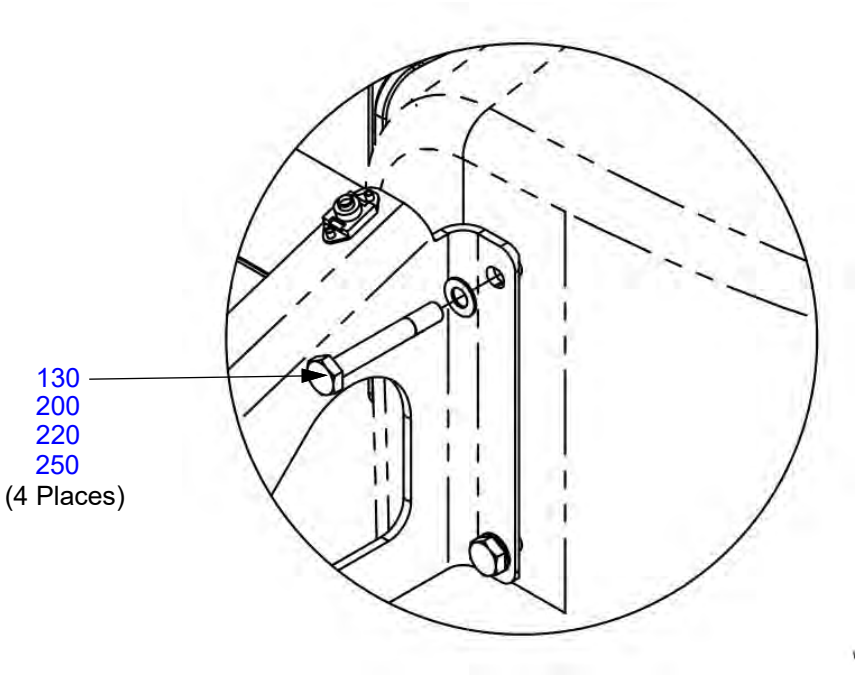

(Left side shown, right side opposite.)

Table 32-20.5: Blast Shield

Figure Item Number	Part Number	Part Name	Effectivity Code	Amount in Assy.
10	AK32205009	Assy, Shield, Debris, Right Side, NLG Door	K003 and On	1
20	AK32205012	Assy, Debris Shield, Left Side, NLG Door	K003 and On	1
30	AK32205014	Weldment, Door Retraction, NLG	K003 and On	1
40	AK32205100	Turnbuckle Assy, NLG Door Actuator	K003 and On	2
50	PK32202004	Retract Tube Wear Sleeve	K003 and On	1
60	PK28205002	Bracket, Support Clamp	K003 and On	1
70	PK32205007	Bracket, Right Side, Debris Shield	K003 and On	1
80	PK32205008	Bracket, Left Side, Debris Shield	K003 and On	1
90	PK32205013	Block, Bearing, Door Actuation, NLG	K003 and On	2
100	AN3-3A	Bolt, 10-32 x 15/32" Undrilled	K003 and On	2
110	AN3-4A	Bolt, 10-32 x 17/32" Undrilled	K003 and On	4
120	AN4-15A	Bolt, 1/4-28 x 1-21/32" Undrilled	K003 and On	2
130	AN4-16A	Bolt, 1/4-28 x 1-25/32" Undrilled	K003 and On	4
140	MS24693-C30	Screw, Machine, C'sunk, CRES Ø .138 x 0.750	K003 and On	2
150	MS24694-S52	Screw, Machine, C'sunk Ø .190 x 21/32	K003 and On	7
160	NAS620C416L	Washer, Reduced OD, CRES, .255 ID x .468 OD	K003 and On	2
170	NAS1149FN616P	Washer, Flat #6 x .016	K003 and On	2
180	NAS1149F0332P	Washer, Flat #10 x .032	K003 and On	6
190	NAS1149F0363P	Washer, Flat #10 x .063	K003 and On	7
200	NAS1149F0432P	Washer, Flat 1/4 x .032	K003 and On	4
210	NAS1149F0463P	Washer, Flat 1/4 x .063	K003 and On	4
*220	AN970-4	Washer, Flat 1/4 x .063	K003 and On	4
230	MS21042L06	Nut, Self-locking, 450°, Reduced #6-32	K003 and On	2
240	MS21043-3	Nut, Self-locking, 800°, Reduced #10-32	K003 and On	7

Figure Item Number	Part Number	Part Name	Effectivity Code	Amount in Assy.
*250	MS21043-4	Nut, Self-locking, Steel 800°, Reduced, 1/4-28	K003 and On	4
260	MS21045L4	Nut, Self-locking, Steel, 1/4-28	K003 and On	4
270	MS14101-5A	Bearing, Self-aligning, Low Speed .3125 ID x .7500 OD x .375 W	K003 and On	2
280	MS16625-4081	Ring, Retaining, Internal, CRES Ø .812 x .042	K003 and On	2

* Item not illustrated.

EXTENSION AND RETRACTION

Figure 32-30.1: Actuator Attachment - Nose Gear

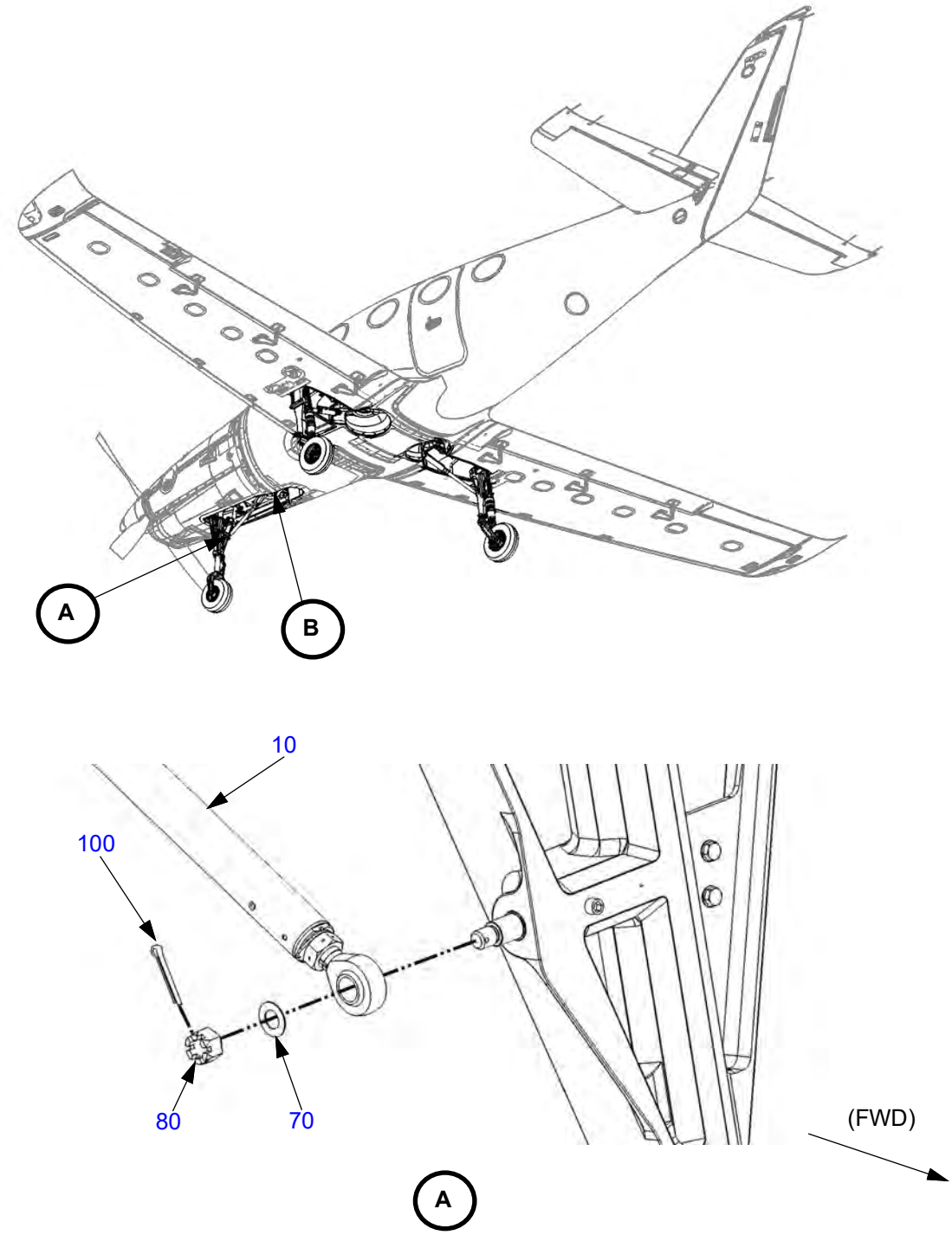

Figure 32-30.1: Actuator Attachment - Nose Gear (Continued)

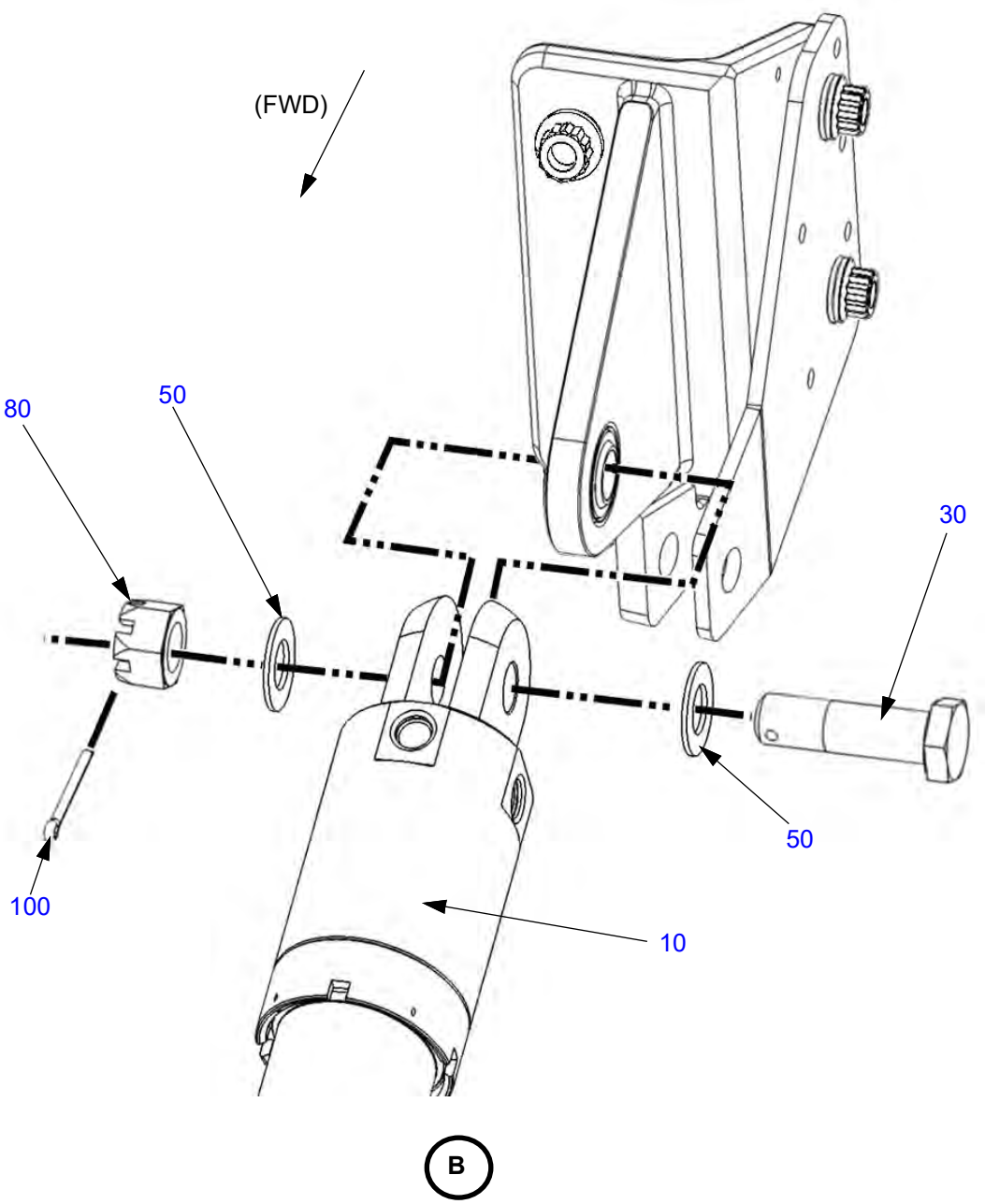

Table 32-30.1: Actuator Attachment - Nose Gear

Figure Item Number	Part Number	Part Name	Effectivity Code	Amount in Assy.
10	AK32301000	Land Gear Actuator	K003 and On	1
20	Deleted			
30	NAS6609-20D	Close Tolerance Bolt, 9/16-18 x 1.25" Grip, Drilled Shank	K003 and On	1
40	Deleted			
50	MS20002C9	Washer, Countersunk, High Strength, 9/16" ID	K003 and On	2
60	Deleted			
70	NAS1149F0932P	Washer, Flat 9/16 x .032	K003 and On	1
80	AN310-9	Nut, Castellated, Steel 9/16-18	K003 and On	1
90	Deleted			
100	MS24665-355	Pin, Cotter, Cad Steel Ø .125 x 1.25	K003 and On	2

* Item not illustrated.

Figure 32-30.2: Actuator Attachment - Main Gear

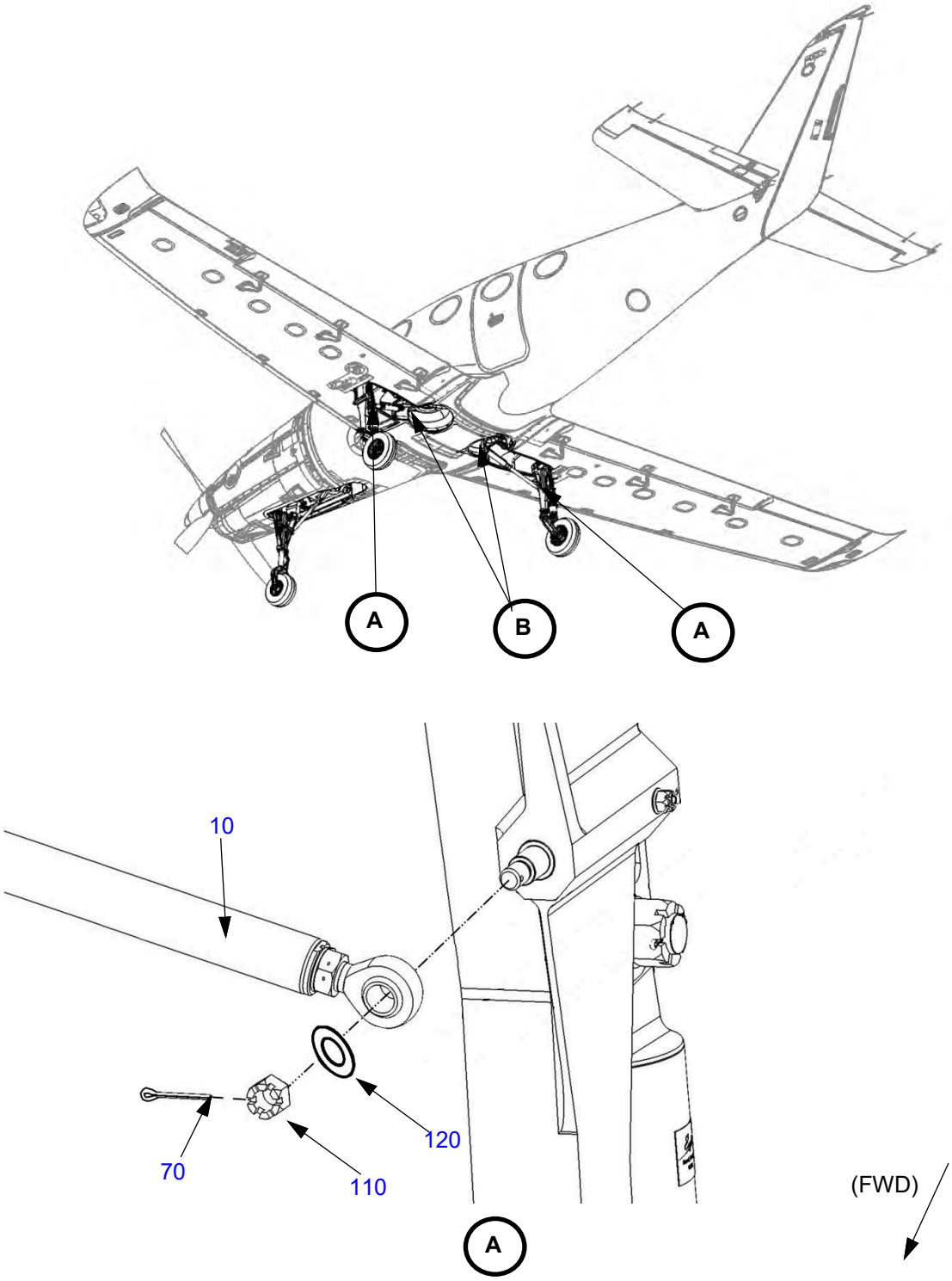

(Left side shown, right side opposite.)

Figure 32-30.2: Actuator Attachment - Main Gear (Continued)

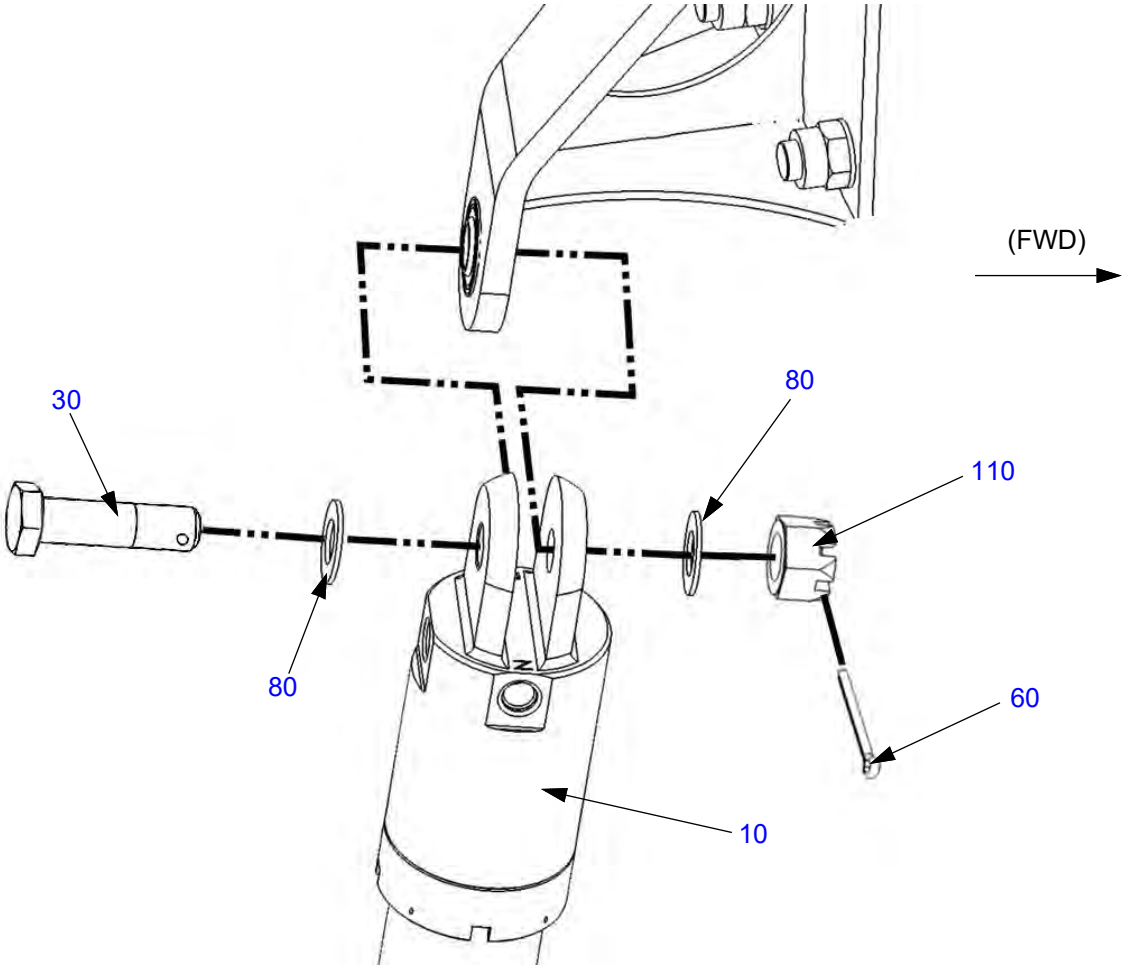

(Left side shown, right side opposite.)

Table 32-30.2: Actuator Attachment - Main Gear

Figure Item Number	Part Number	Part Name	Effectivity Code	Amount in Assy.
10	AK32301000	Landing Gear Actuator	K003 and On	1
20	Deleted			
30	NAS6609-20D	Close Tolerance Bolt, 9/16-18 x 1.25" Grip, Drilled Shank	K003 and On	1
40	Deleted			
50	Deleted			
60	MS24665-355	Pin, Cotter, Cad Steel Ø .125 x 1.25	K003 and On	2
70	MS24665-357	Pin, Cotter, Cad Steel Ø .125 x 1.50	K003 and On	1
80	MS20002C9	Washer, Countersunk, High Strength, 9/16" ID	K003 and On	2
90	Deleted			
100	Deleted			
110	AN310-9	Nut, Castellated, Steel 9/16-18	K003 and On	2
120	NAS1149F0916P	Washer, Flat, 9/16 x .016	K003 and On	A/R

Figure 32-30.3: Landing Gear Uplock, Nose Landing Gear

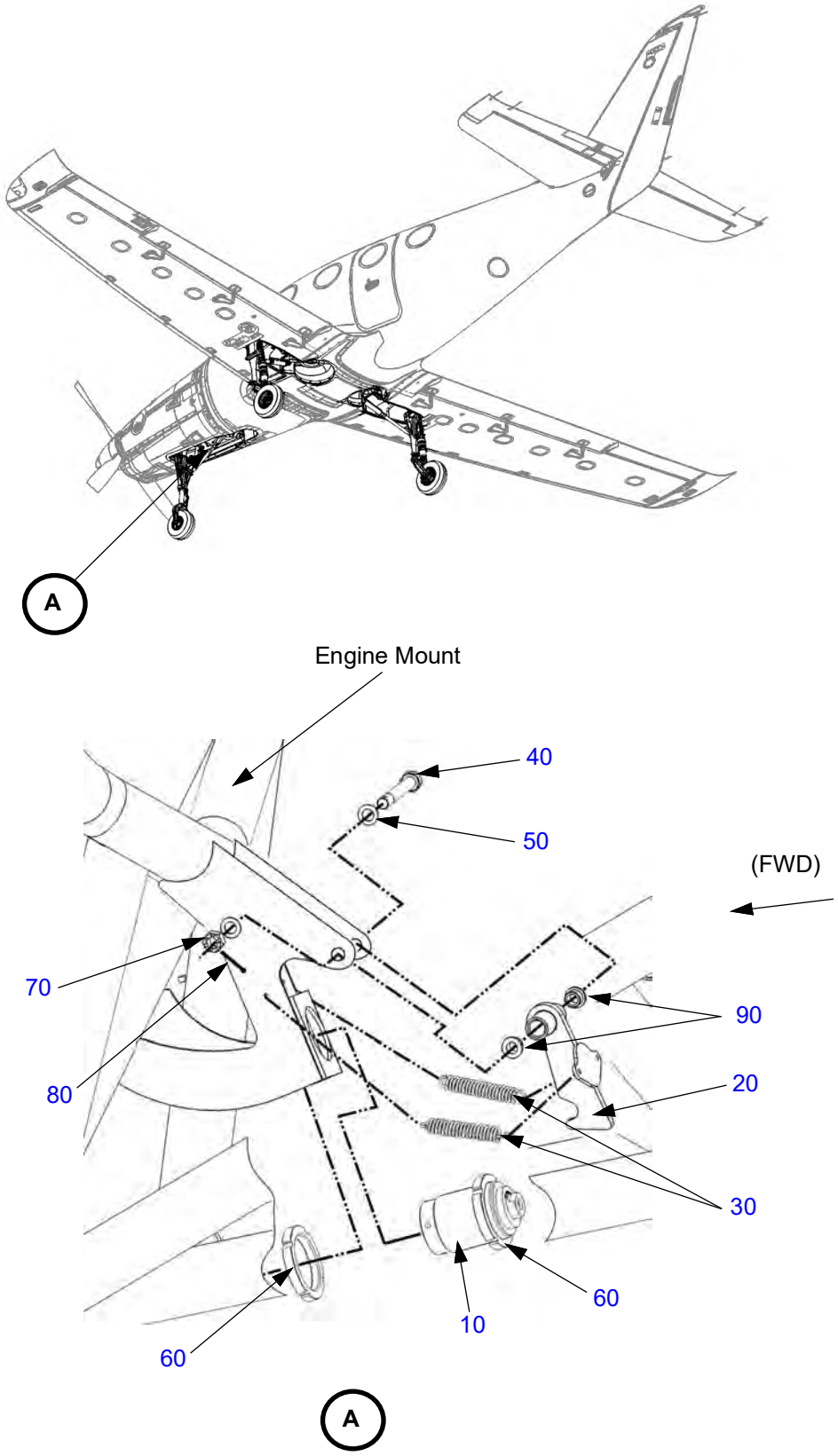

Table 32-30.3: Landing Gear Uplock, Nose Landing Gear

Figure Item Number	Part Number	Part Name	Effectivity Code	Amount in Assy.
10	PK99005372	Cylinder, Threaded 1.8750-16, Dual Acting, .5 Stroke	K003 and On	1
20	AK32308001	Weldment, Hook, NLG	K003 and On	1
30	PK99006005	Extension Spring, 2.00", Up Lock	K003 and On	2
40	AN5-27	Bolt, 5/16-24 x 2-31/32" Drilled Shank	K003 and On	1
50	NAS1149F0532P	Washer, Flat 5/16 x .032	K003 and On	2
60	PK32301011	Nut, Uplock Actuator	K003 and On	2
70	AN310-5	Nut, Castellated, Steel 5/16-24	K003 and On	1
80	MS24665-134	Pin, Cotter, Cad Steel Ø .062 x .75	K003 and On	1
90	PK32308004	Bushing, NLG Up-lock Assembly	K003 and On	2

Figure 32-30.4: Landing Gear Uplock, Main Landing Gear

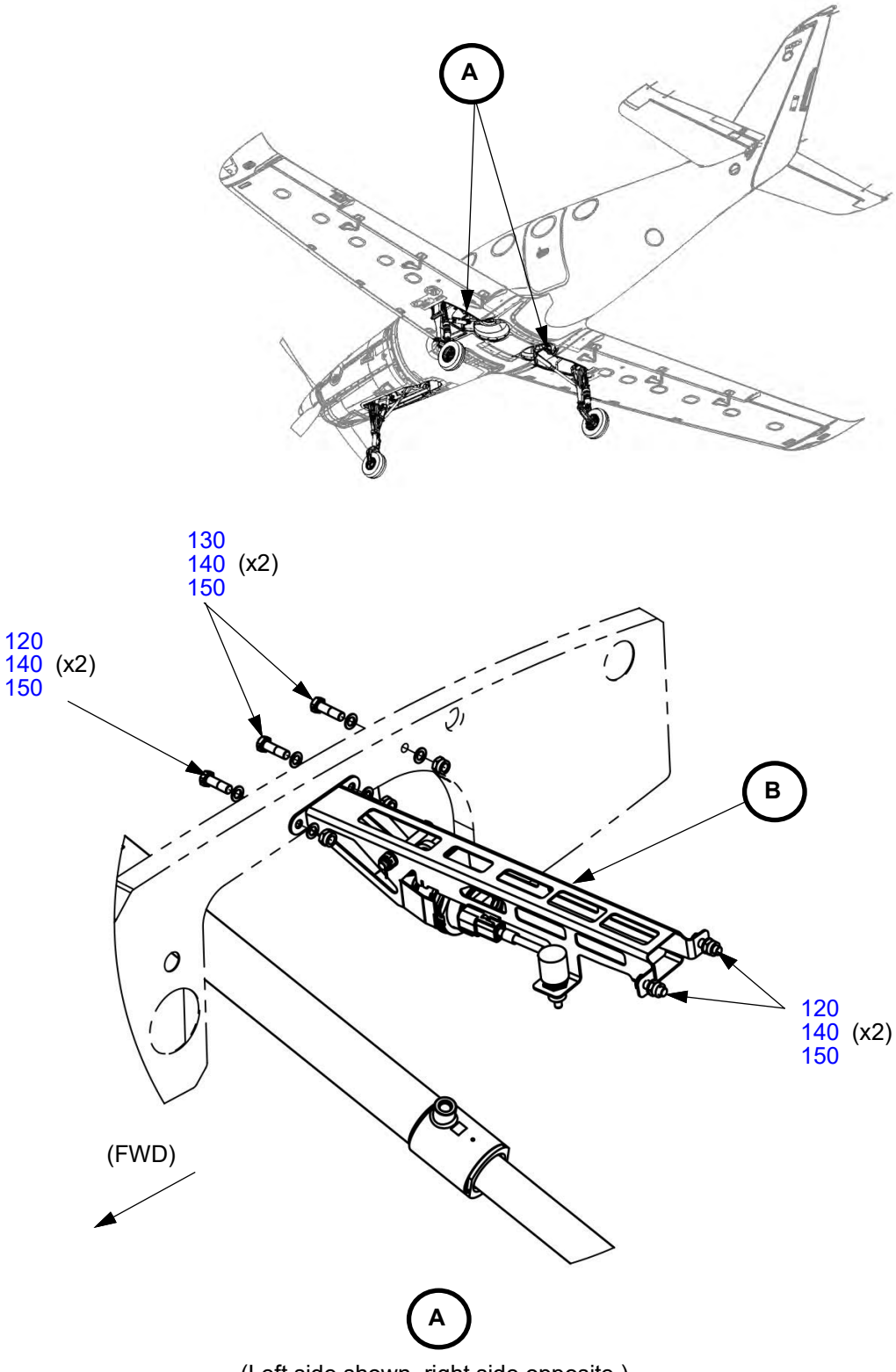

(Left side shown, right side opposite.)

Figure 32-30.4: Landing Gear Uplock, Main Landing Gear (Continued)

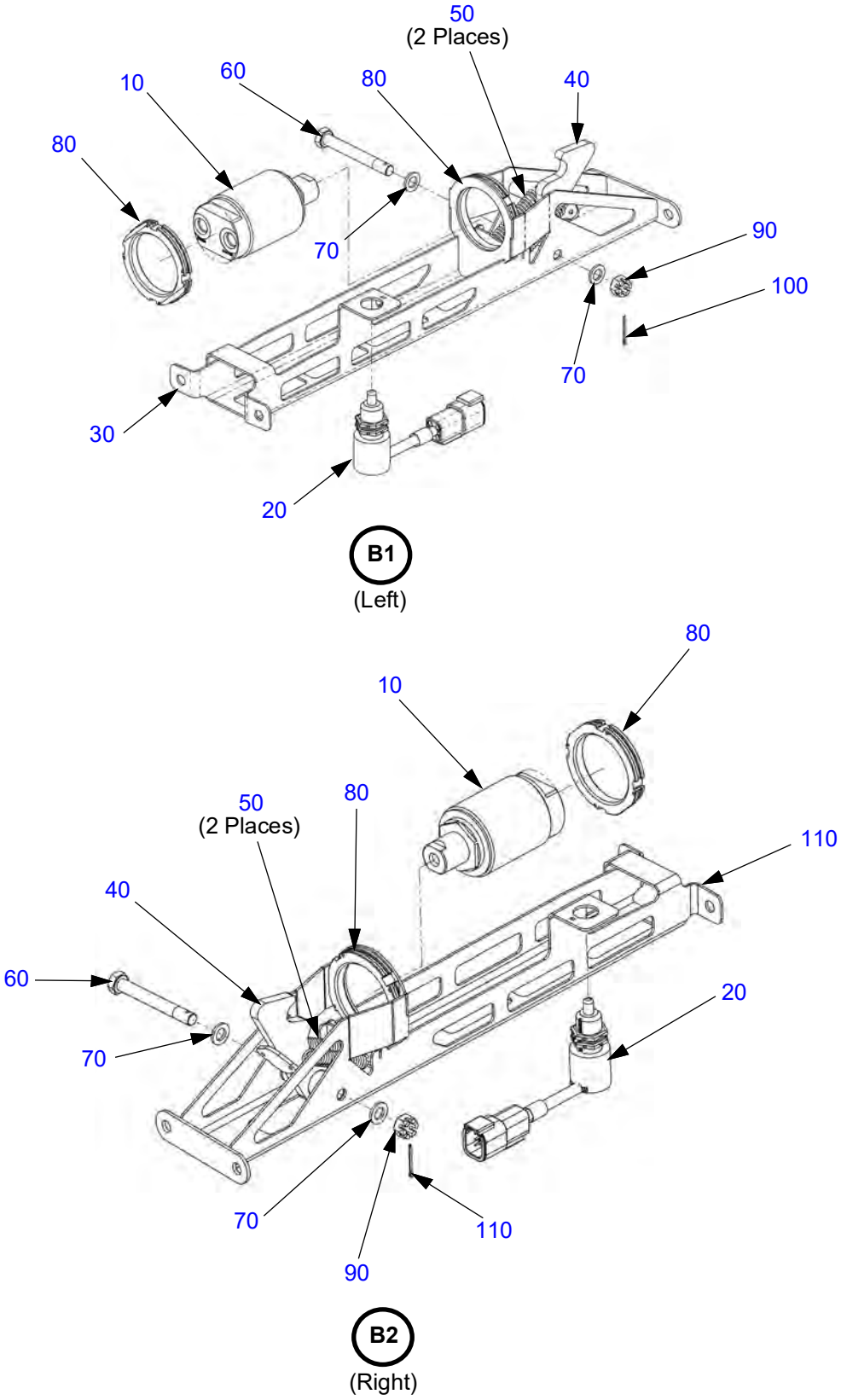

Table 32-30.4: Landing Gear Uplock, Main Landing Gear

Figure Item Number	Part Number	Part Name	Effectivity Code	Amount in Assy.
10	PK99005372	Cylinder, Threaded 1.8750-16, Dual Acting, 0.5 Stroke	K003 and On	2
20	AK32303401	Gear Up Switch, Connector, Main Gear	K003 and On	2
30	AK32303501	Weldment, Bracket, Up Lock, Left	K003 and On	1
40	AK32303200	Up-lock Hook Assy, MLG	K003 and On	2
50	PK99006005	Extension Spring, 2.00", Up Lock	K003 and On	4
60	AN5-23	Bolt, 5/16-24 x 2-15/32" Drilled Shank	K003 and On	2
70	NAS1149F0563P	Washer, Flat 5/16 x .063	K003 and On	4
80	PK32301011	Nut, Uplock Actuator	K003 and On	4
90	AN310-5	Nut, Castellated, Steel 5/16-24	K003 and On	2
100	MS24665-134	Pin, Cotter, Cad Steel Ø .062 x .75	K003 and On	2
110	AK32304501	Weldment, Bracket, Up Lock, Right	K003 and On	1
120	AN5-7A	Bolt, 5/16-24 x 31/32" Undrilled	K003 and On	6
130	AN5H10A	Bolt, 5/16-24 x 1-3/32" Undrilled	K003 and On	4
140	NAS1149F0532P	Washer, Flat 5/16 x .032	K003 and On	20
150	MS21045L5	Nut, Self-locking, Steel 5/16-24 10	K003 and On	10

Figure 32-30.5: Nose and Main Landing Gear Upstops

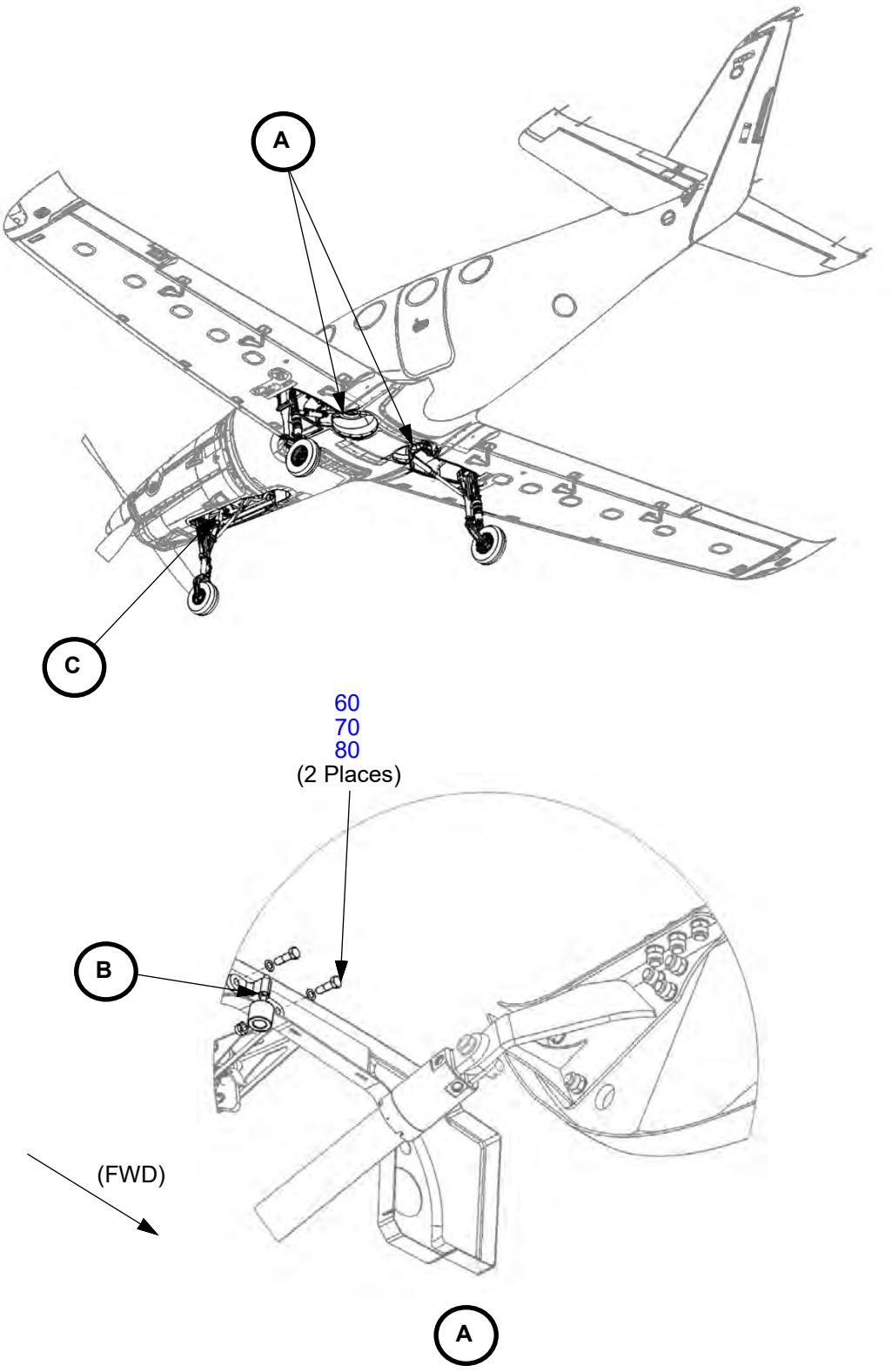

(Left side shown, right side opposite.)

Figure 32-30.5: Nose and Main Landing Gear Upstops (Continued)

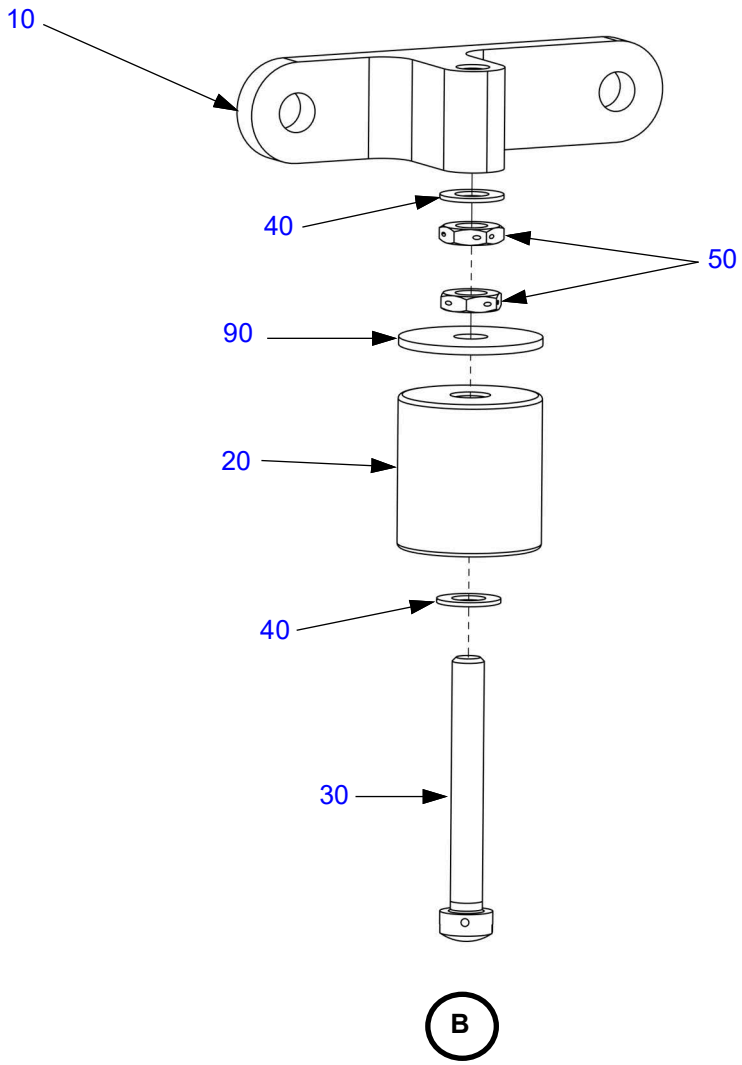

(Left side shown, right side opposite.)

Figure 32-30.5: Nose and Main Landing Gear Upstops (Continued)

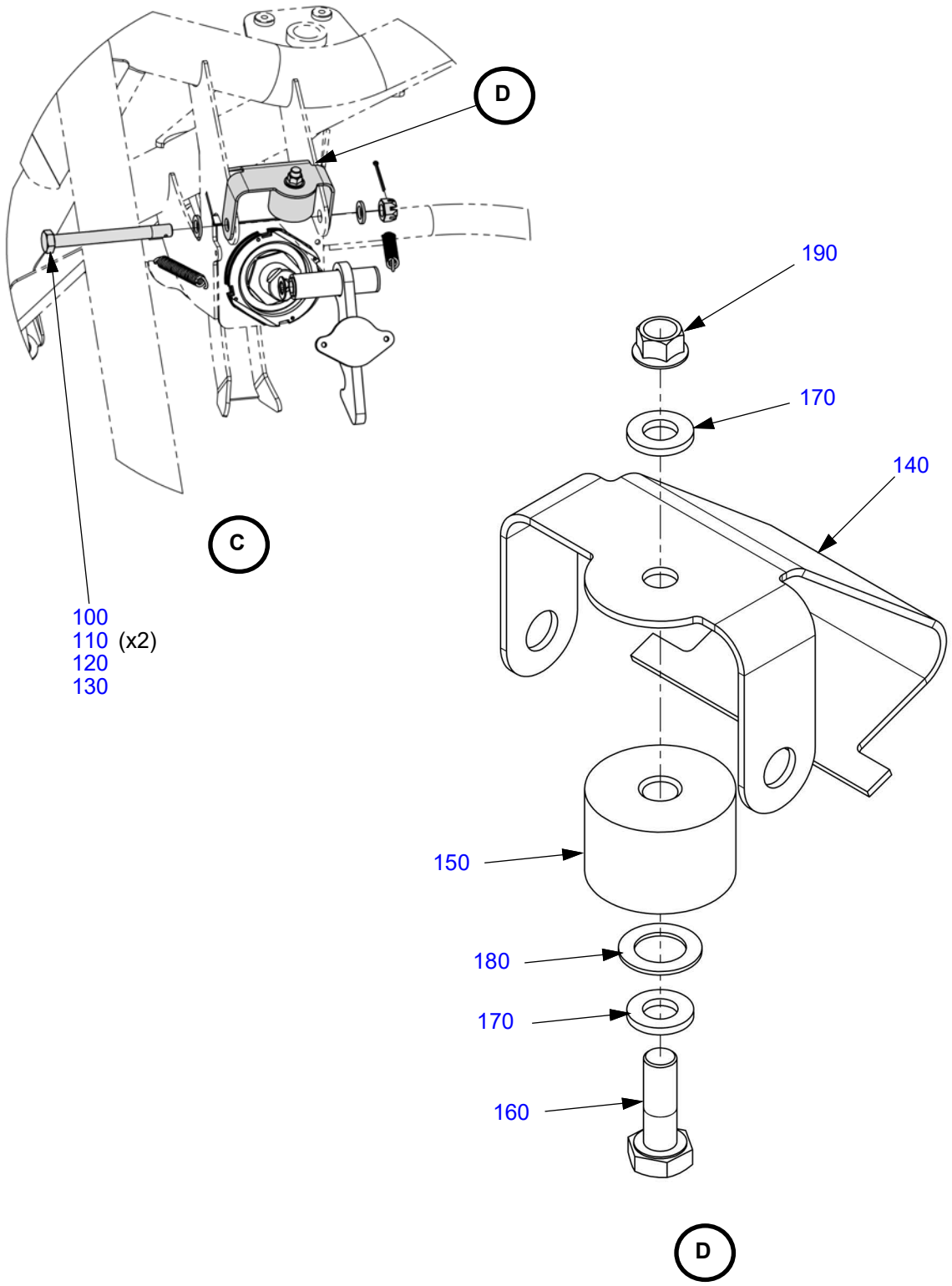

Table 32-30.5: Nose and Main Landing Gear Upstops

Figure Item Number	Part Number	Part Name	Effectivity Code	Amount in Assy.
10	PK32305001	Up Stop Bracket, MLG	K003 and On	2
20	PK32305002	Rubber Bumper, Up Stop	K003 and On	2
30	AN502-416-32	Screw, Drilled Fillister, Fine Thread, 1/4 x 2.00 Lg.	K003 and On	2
40	NAS1149F0432P	Washer, Flat 1/4 x .032	K003 and On	4
50	NAS1423-4	Nut, Jam, Drilled, Cad Steel 1/4-28	K003 and On	4
60	AN5-10A	Bolt, 5/16-24 x 1-3/32" Undrilled	K003 and On	4
70	NAS1149F0532P	Washer, Flat 5/16 x .032	K003 and On	8
80	MS21045L5	Nut, Self-locking, Steel 5/16-24	K003 and On	4
90	AN970-4	Washer, Flat 1/4 x .063	K003 and On	2
100	AN5-30	Bolt, 5/16-24 x 3-3/32" Drilled Shank	K050 and On*	1
110	NAS1149F0563P	Washer, Flat 5/16 x .063	K050 and On*	2
120	AN310-5	Nut, Castellated, Steel 5/16-24	K050 and On*	1
130	MS24665-134	Pin, Cotter, Cad Steel Ø .062 x .75	K050 and On*	1
140	PK71202084	Bumper Bracket, Up Stop, NLG Hook	K050 and On*	1
150	PK71202083	NLG Rubber Bumper, Up Stop	K050 and On*	1
160	AN4-6A	Bolt, 1/4-28 x 25/32" Undrilled	K050 and On*	1
170	NAS1149F0463P	Washer, Flat 1/4 x .063	K050 and On*	2
180	NAS1149F0632P	Washer, Flat 3/8 x .032	K050 and On*	1
190	MS21042L4	Nut, Self-locking, 450°, Reduced 1/4-28	K050 and On*	1

*Also K003 - K049 with SB-0054.

Figure 32-30.6: Landing Gear Switch (SN: K003-K010)

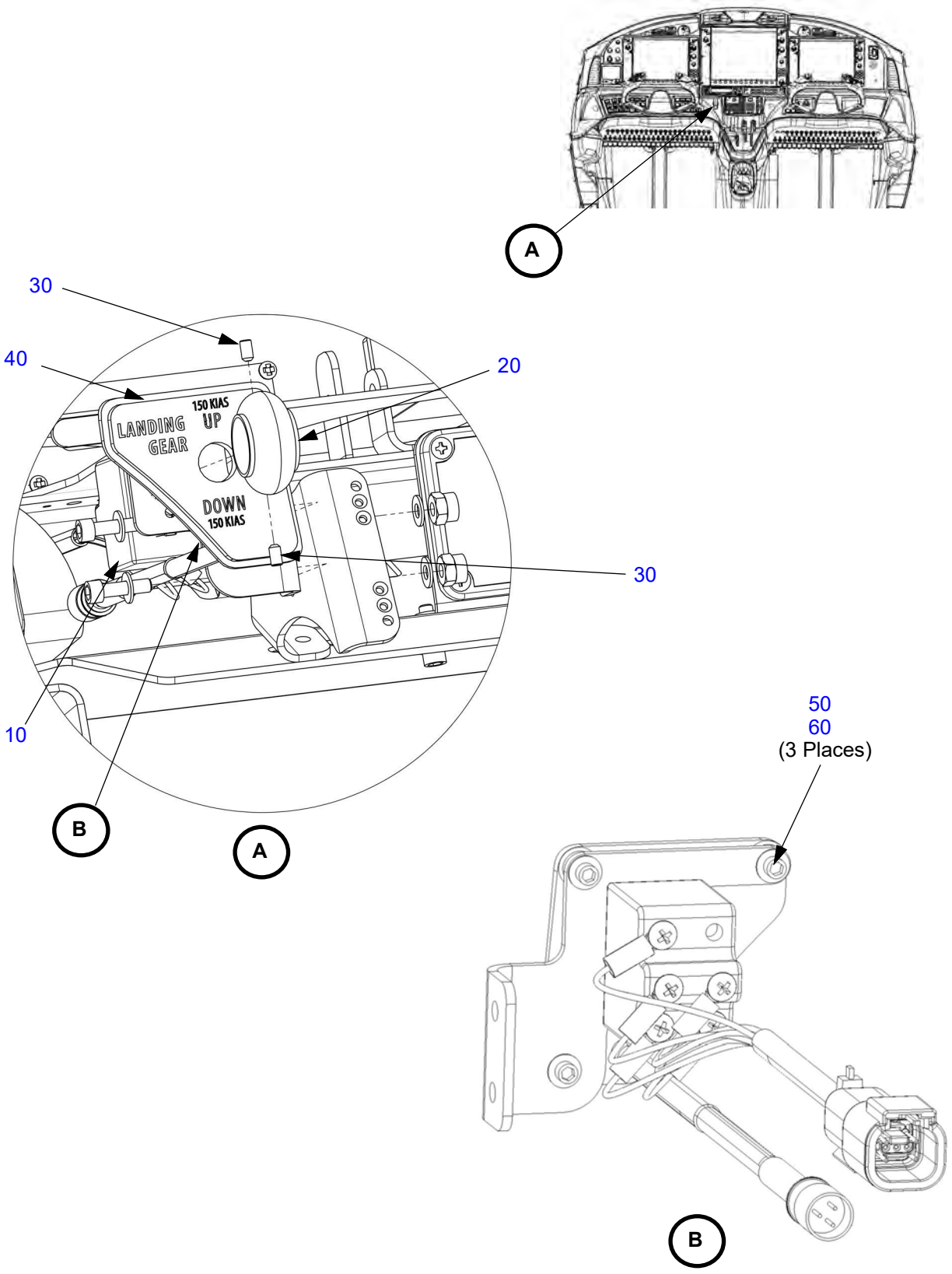

Table 32-30.6: Landing Gear Switch (SN: K003-K010)

Figure Item Number	Part Number	Part Name	Effectivity Code	Amount in Assy.
10	AK39000009	Landing Gear Control Switch	K003 - K010	1
20	PK39000014	Landing Gear Knob	K003 - K010	1
30	MS51965-19	Setscrew, Hex Socket, Flat End Ø .138-32 x .250	K003 - K010	2
40	AK39109501	Assembly, Light Plate, Landing Gear, Switch	K003 - K010	1
50	NAS1352-04-3P	Screw, Socket Head .112-40 x .188	K003 - K010	3
60	NAS1149FN416P	Washer, Flat #4 x .016	K003 - K010	3

Figure 32-30.7: Landing Gear Switch (SN: K011 and On and SN:K003-K010 with SB-0017)

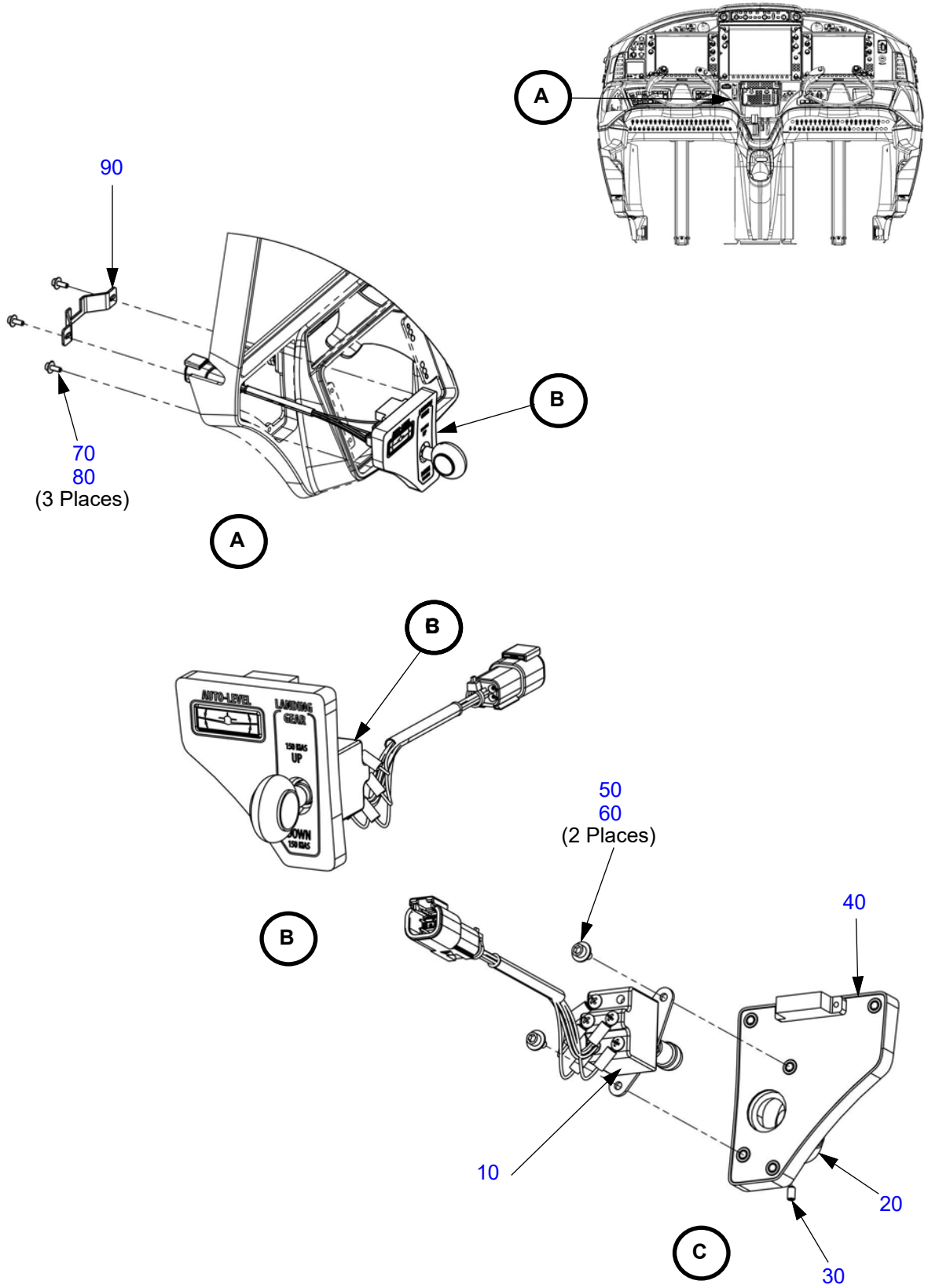

Table 32-30.7: Landing Gear Switch (SN: K011 and On and SN:K003-K010 with SB-0017)

Figure Item Number	Part Number	Part Name	Effectivity Code	Amount in Assy.
10	AK39000009	Landing Gear Control Switch	K011 and On*	1
20	PK39000014	Landing Gear Knob	K011 and On*	1
30	MS51965-19	Setscrew, Hex Socket, Flat End Ø .138-32 x .250	K011 and On*	2
40	PK99008401	Light Plate, Landing Gear, Auto-level, GFC	K011 and On*	1
50	NAS1352-06-5P	Screw, Socket Head .138-32 x .313	K011 and On*	2
60	NAS1149FN632P	Washer, Flat #6 x .032	K011 and On*	2
70	NAS1352-06-6P	Screw, Socket Head .138-32 x .375	K011 and On*	3
80	NAS1149FN616P	Washer, Flat #6 x .016	K011 and On*	3
90	PK39000023	Connector Retainer, Flaps And Gear Light Plate	K011 and On*	1

*Also SN:K003-K010 with SB-0017

This Page Intentionally Left Blank

WHEELS AND BRAKES

Figure 32-40.1: Main Wheels

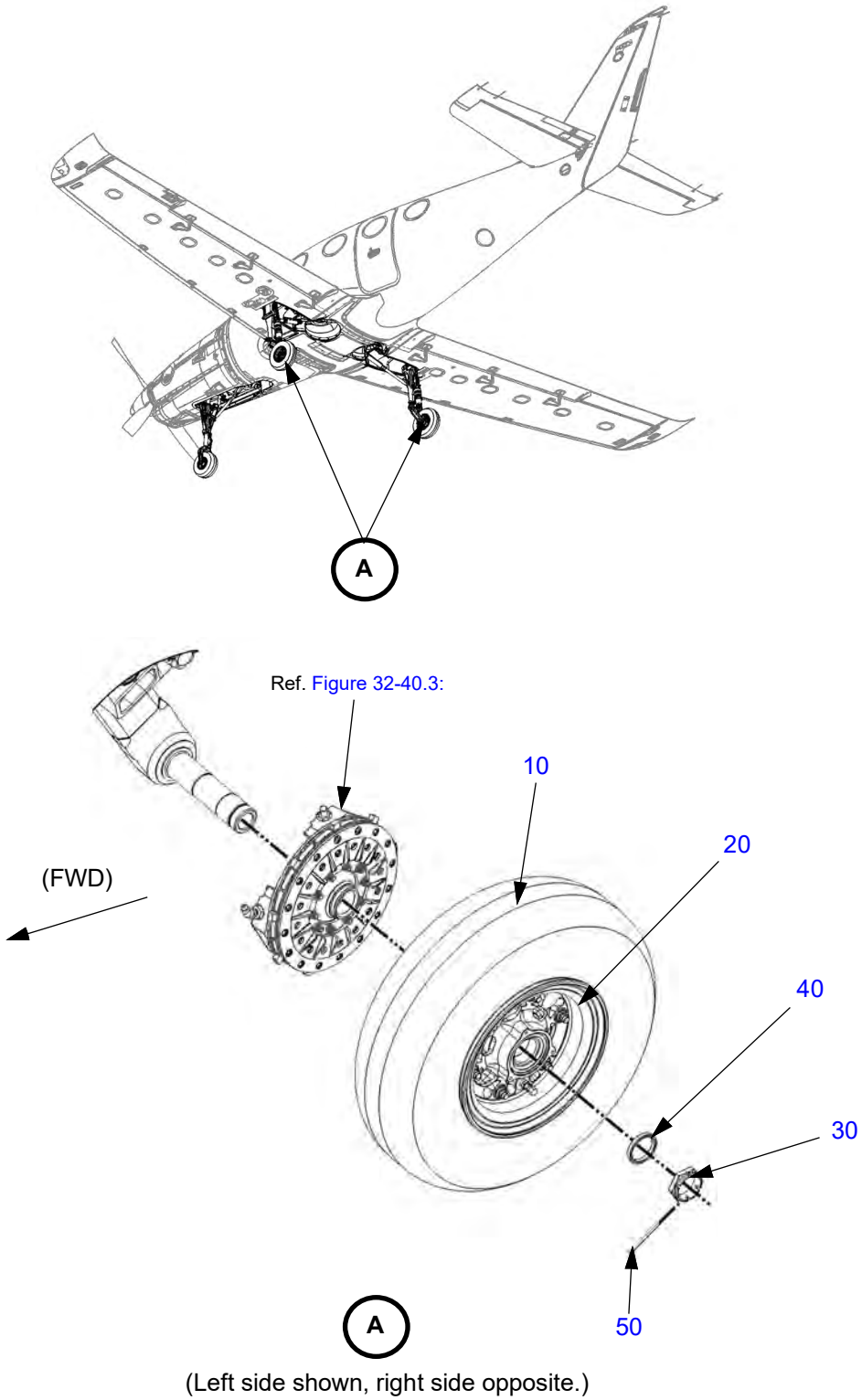

(Left side shown, right side opposite.)

Table 32-40.1: Main Wheels

Figure Item Number	Part Number	Part Name	Effectivity Code	Amount in Assy.
10	185F03-5	Goodyear Tire, 18 x 5.5-10, 10 Ply	K003 and On	2
*	033-631-0	Michelin Tire, 18 x 5.5-10, 10 Ply	-	-
20	40-434	Wheel Assembly, Main (Refer to Parker Hannifin Corporation CMM/IPC document number: 40-434)	K003 and On	2
30	MS21025-24	Nut, Castellated Ø 1.500-16	K003 and On	2
40	PK32101006	Spacer Washer, Wheel Axle, MLG	K003 and On	2
50	MS24665-361	Pin, Cotter, Cad Steel Ø .125 x 2.25	K003 and On	2

*Alternate Part Number

Figure 32-40.2: Nose Wheel

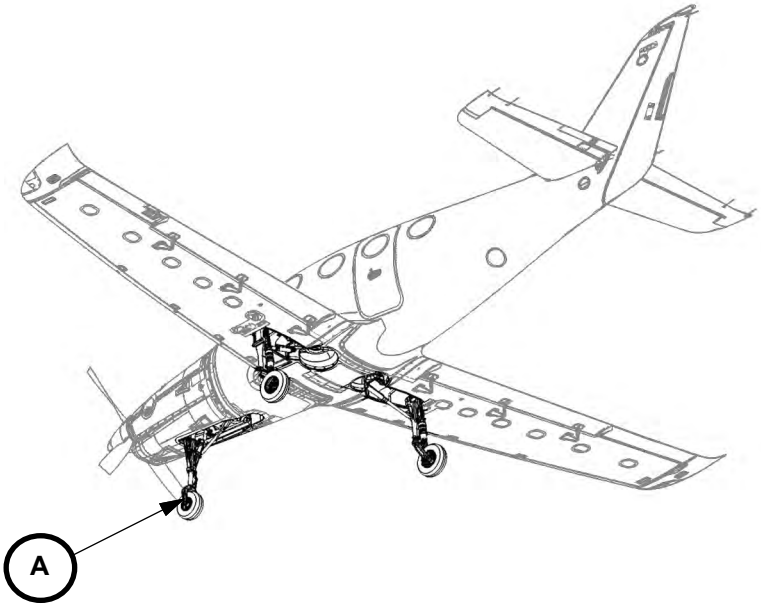

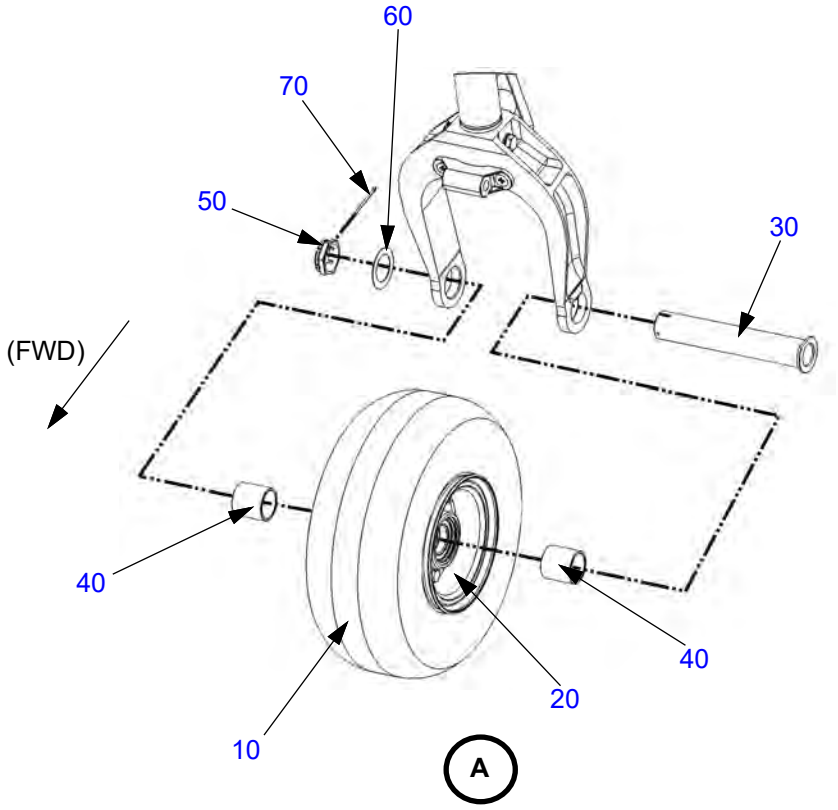

Table 32-40.2: Nose Wheel

Figure Item Number	Part Number	Part Name	Effectivity Code	Amount in Assy.
10	156E06-1	Goodyear Tire, 15 x 6.0-6, 10 Ply	K003 and On	1
20	40-423	Wheel Assy., Nose (Refer to Parker Hannifin Corporation CMM/IPC document number: 40-423)	K003 and On	1
30	PK32201005	Wheel Axle, NLG	K003 and On	1
40	PK32201006	Distance Bar, Wheel Axle, NLG	K003 and On	2
50	MS21025-24	Nut, Castellated Ø 1.500-16	K003 and On	1
60	NAS1149F2432P	Washer, Flat 1-1/2 x .032	K003 and On	1
70	MS24665-361	Pin, Cotter, Cad Steel Ø .125 x 2.25	K003 and On	1

Figure 32-40.3: Brakes

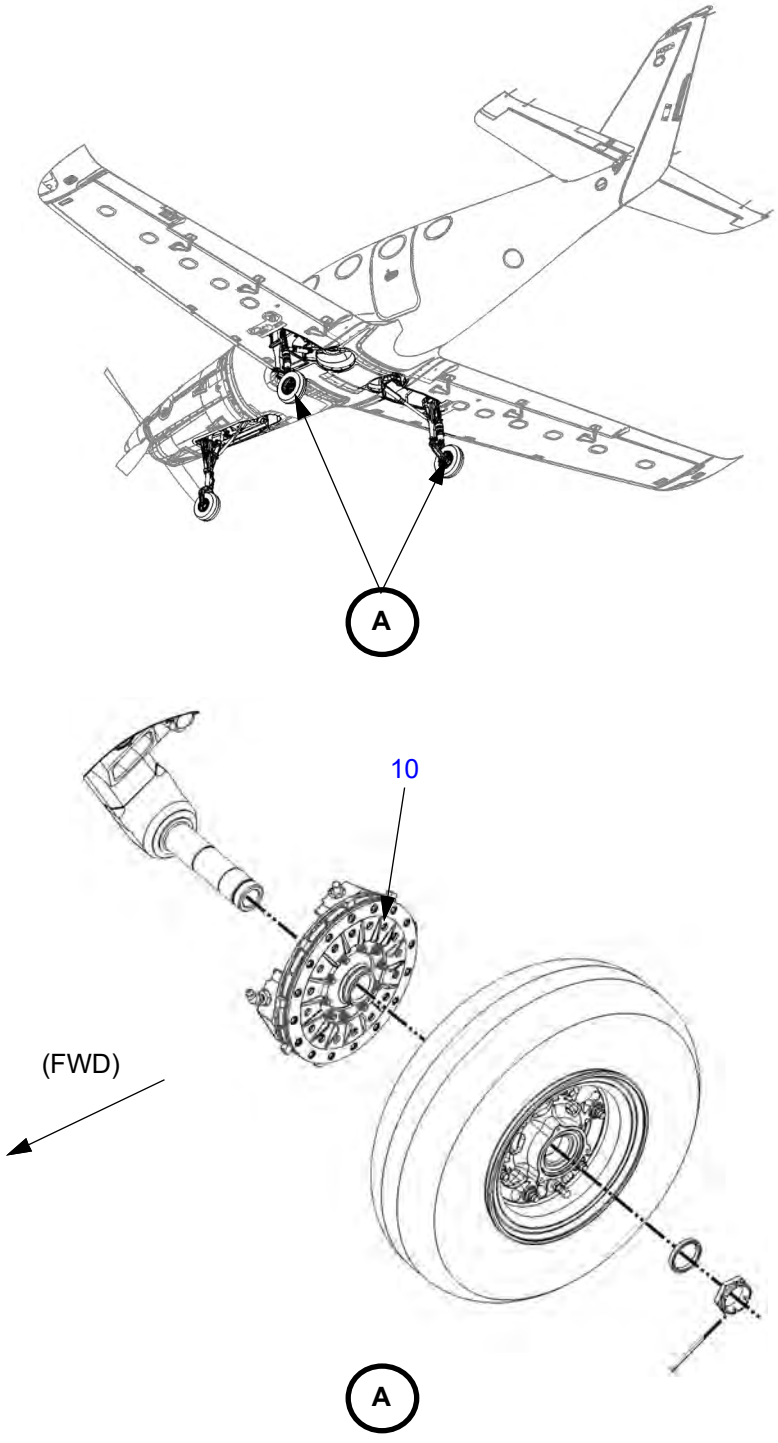

(Left side shown, right side opposite.)

Table 32-40.3: Brakes

Figure Item Number	Part Number	Part Name	Effectivity Code	Amount in Assy.
10	30-191	Brake Assy., Main (Refer to Parker Hannifin Corporation CMM/IPC document number: CM30-191)	K003 and On	2

Figure 32-40.4: Master Cylinders

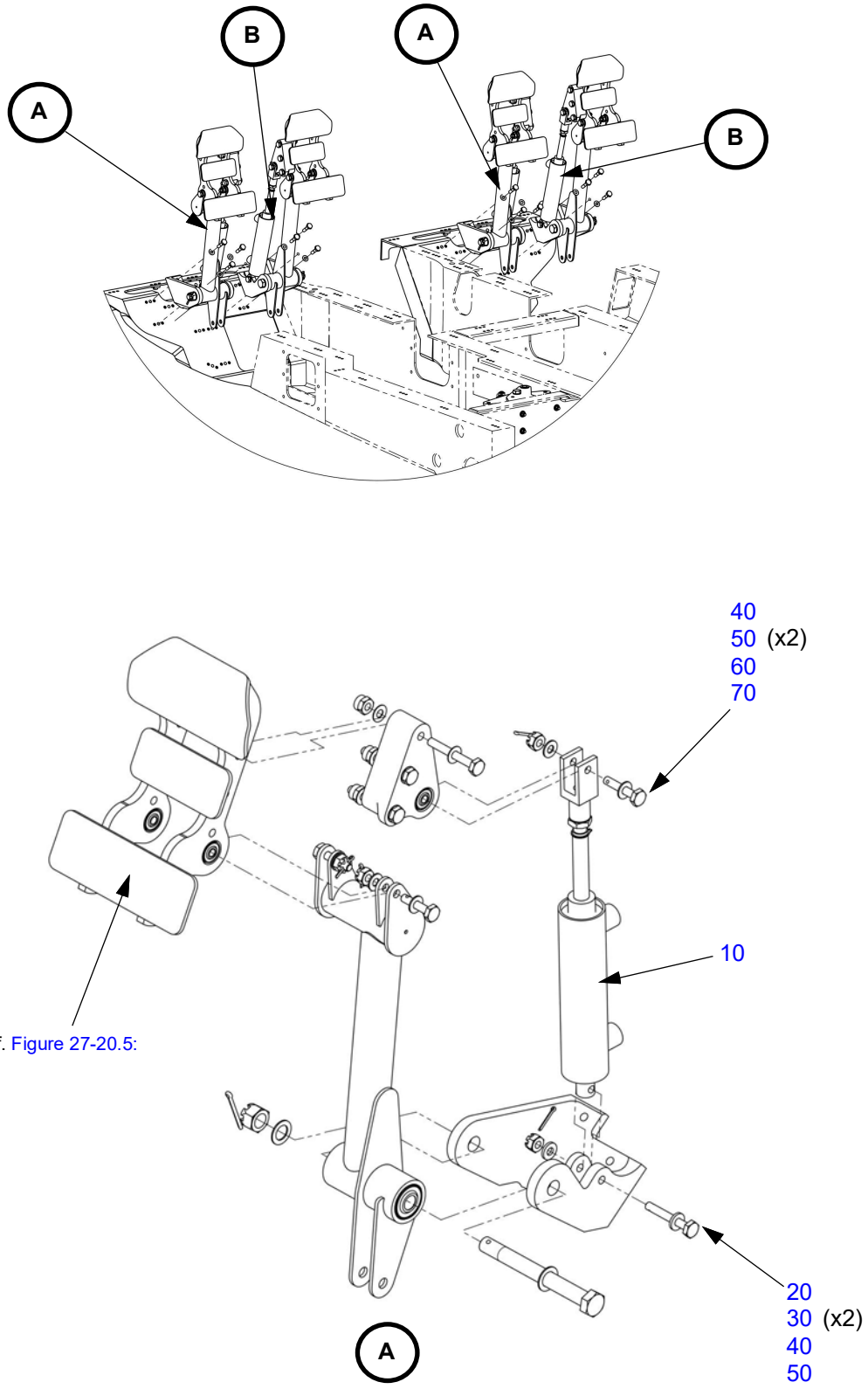

Figure 32-40.4: Master Cylinders (Continued)

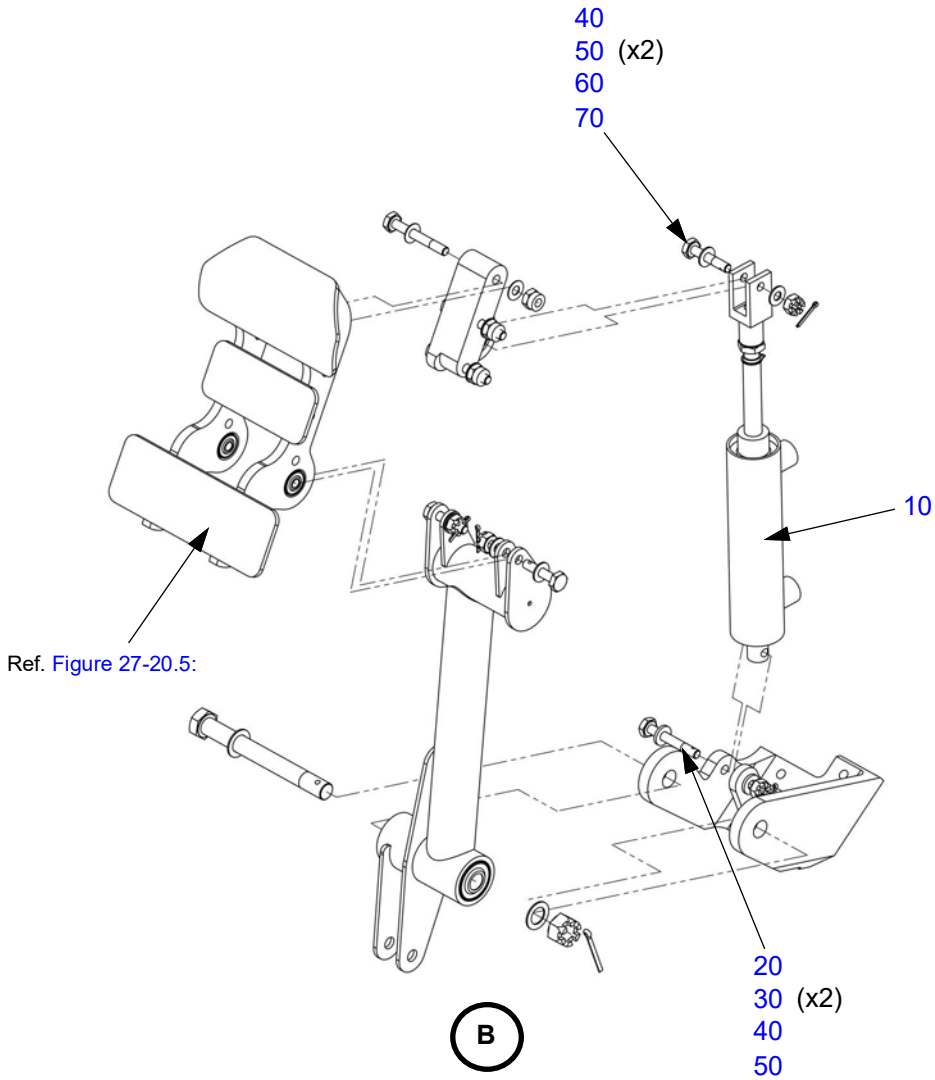

Table 32-40.4: Master Cylinders

Figure Item Number	Part Number	Part Name	Effectivity Code	Amount in Assy.
10	PK99003003	C100080 Series Master Cylinder	K003 and On	4
10*	AK32405000	Brake Master Cylinder Assembly	K003 and On	4
20	AN3-13	Bolt, 10-32 x 1-13/32" Drilled Shank	K003 and On	4
30	NAS1149F0363P	Washer, Flat #10 x .063	K003 and On	8
40	AN310-3	Nut, Castellated, Steel 10-32	K003 and On	8
50	MS24665-132	Pin, Cotter, Cad Steel Ø .062 x .50	K003 and On	8
60	AN3-10	Bolt, 10-32 x 1-1/32" Drilled Shank	K003 and On	4
70	NAS1149F0332P	Washer, Flat #10 x .032	K003 and On	8

* Alternate Part Number

Figure 32-40.5: Brake Reservoir and Lines, Fuselage

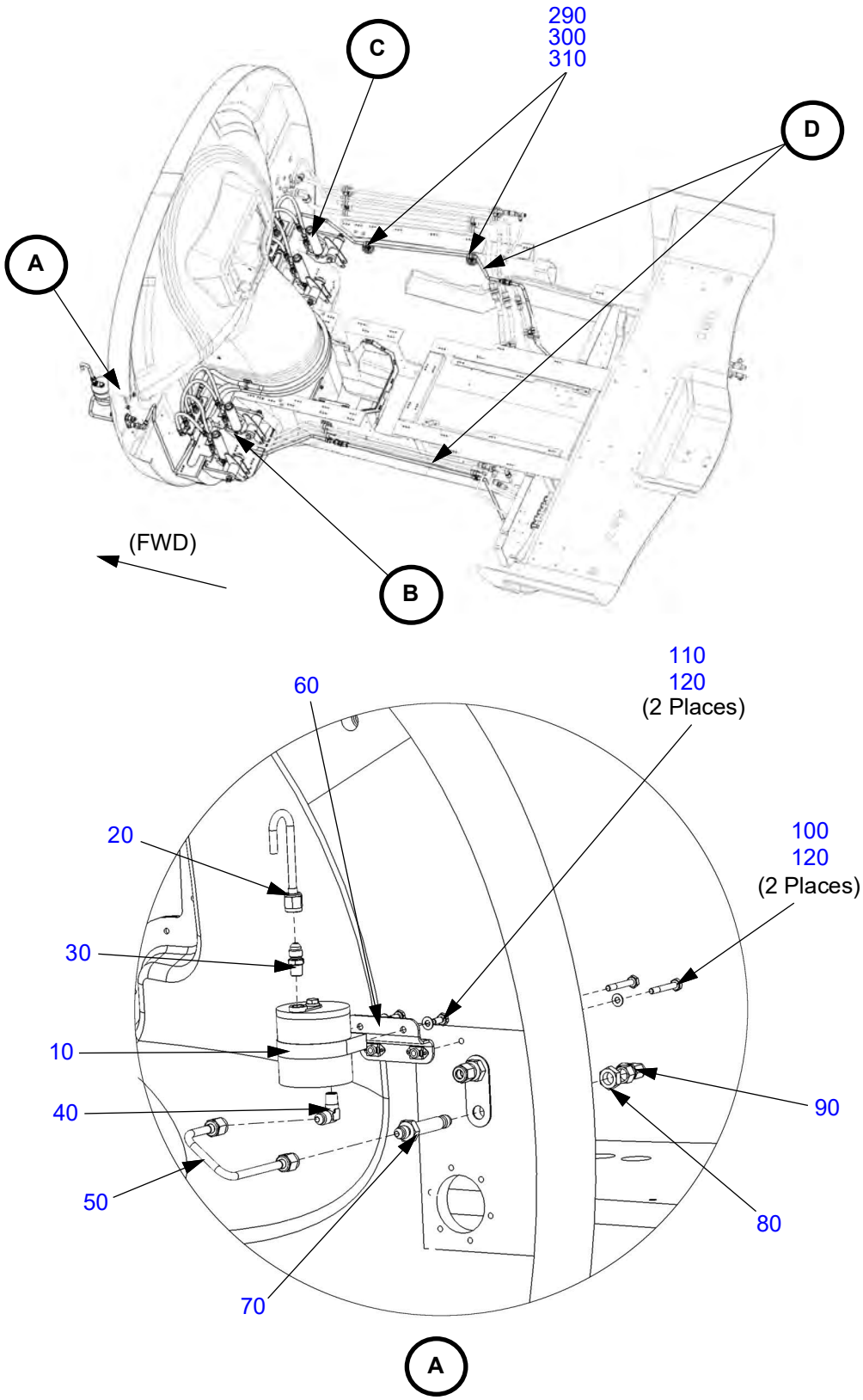

Figure 32-40.5: Brake Reservoir and Lines, Fuselage (Continued) (SN: K003 - K010)

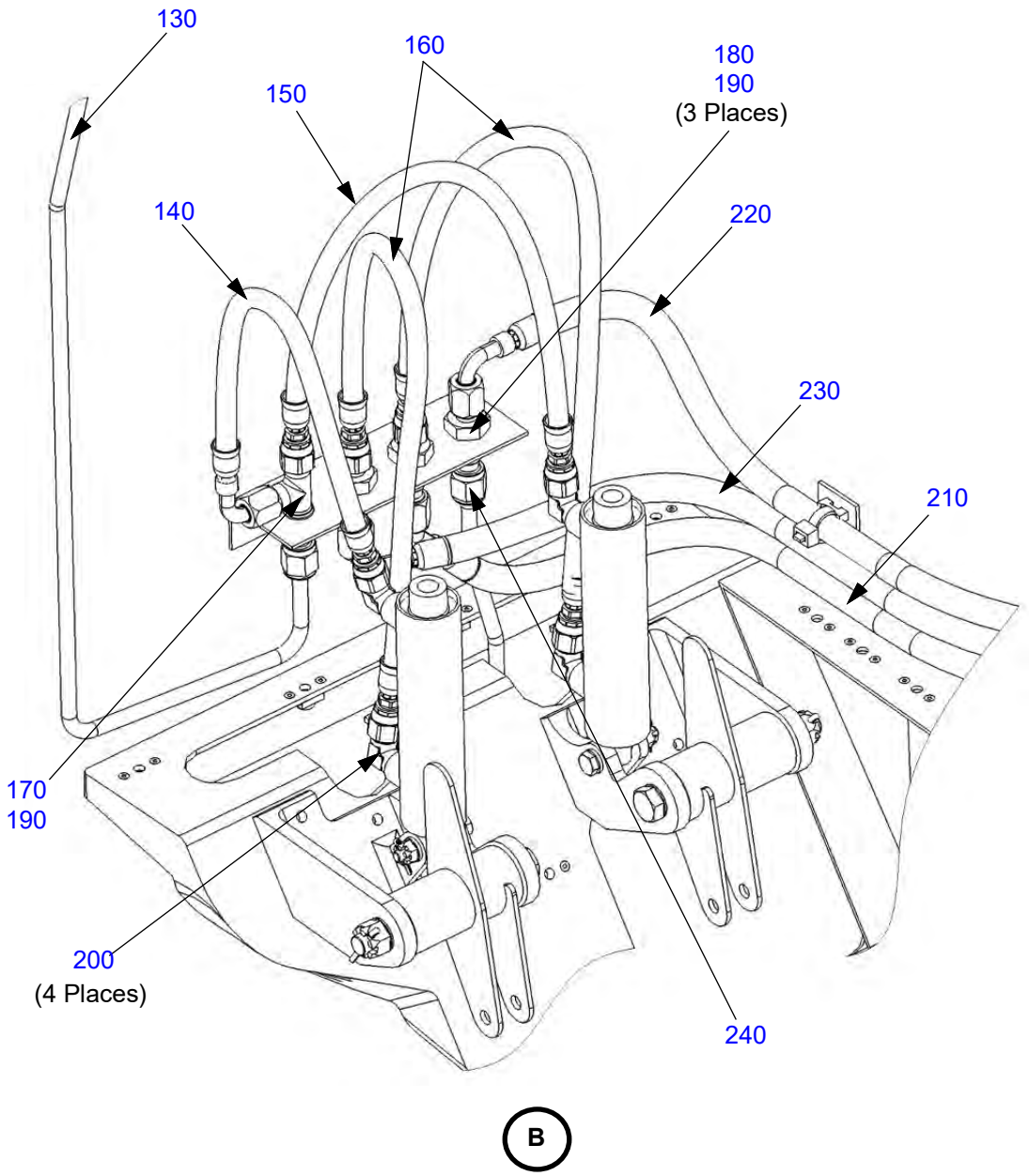

Figure 32-40.5: Brake Reservoir and Lines, Fuselage (Continued)(SN: K003 - K010)

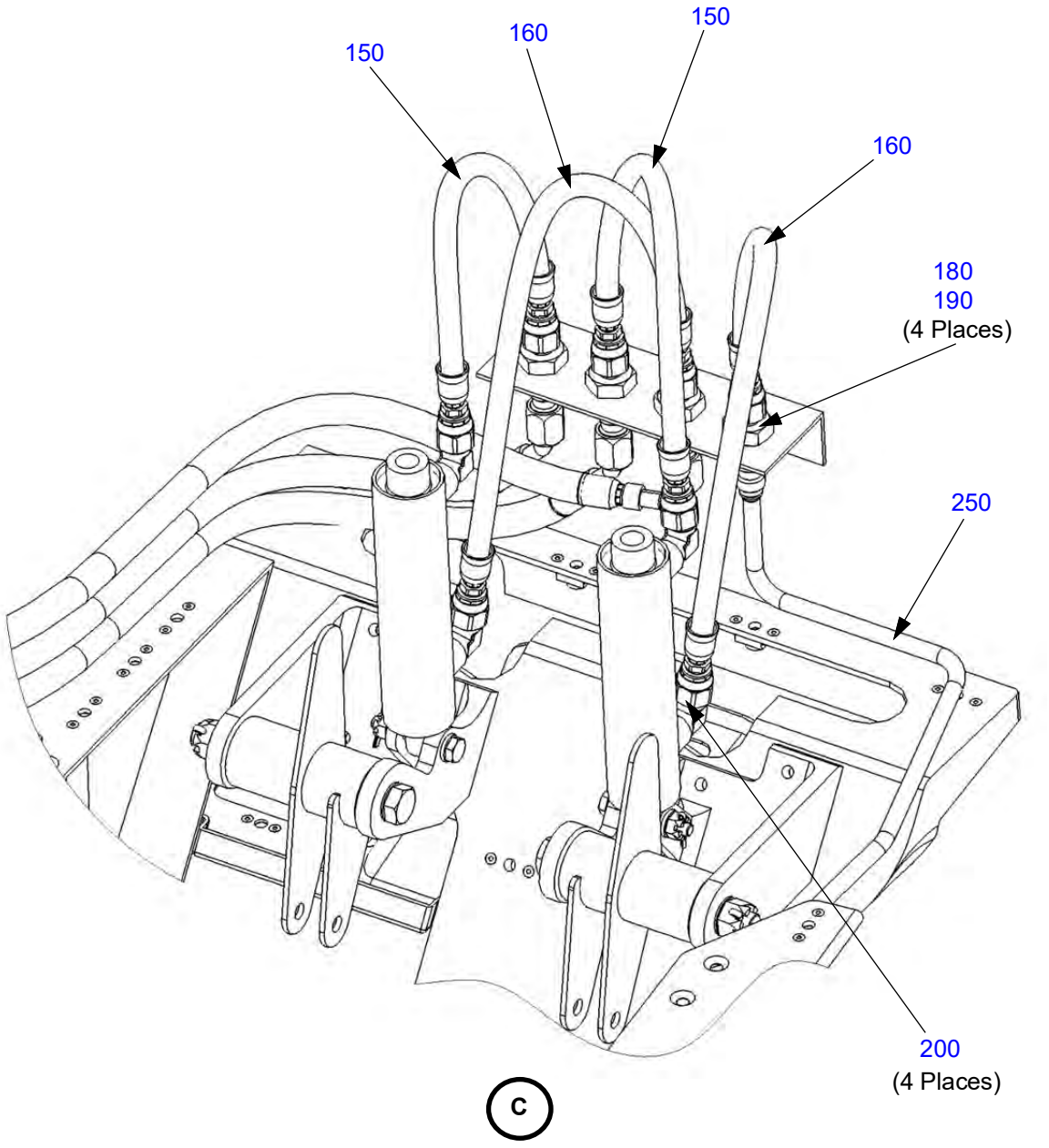

Figure 32-40.5: Brake Reservoir and Lines, Fuselage (Continued)(SN: K011 and on)

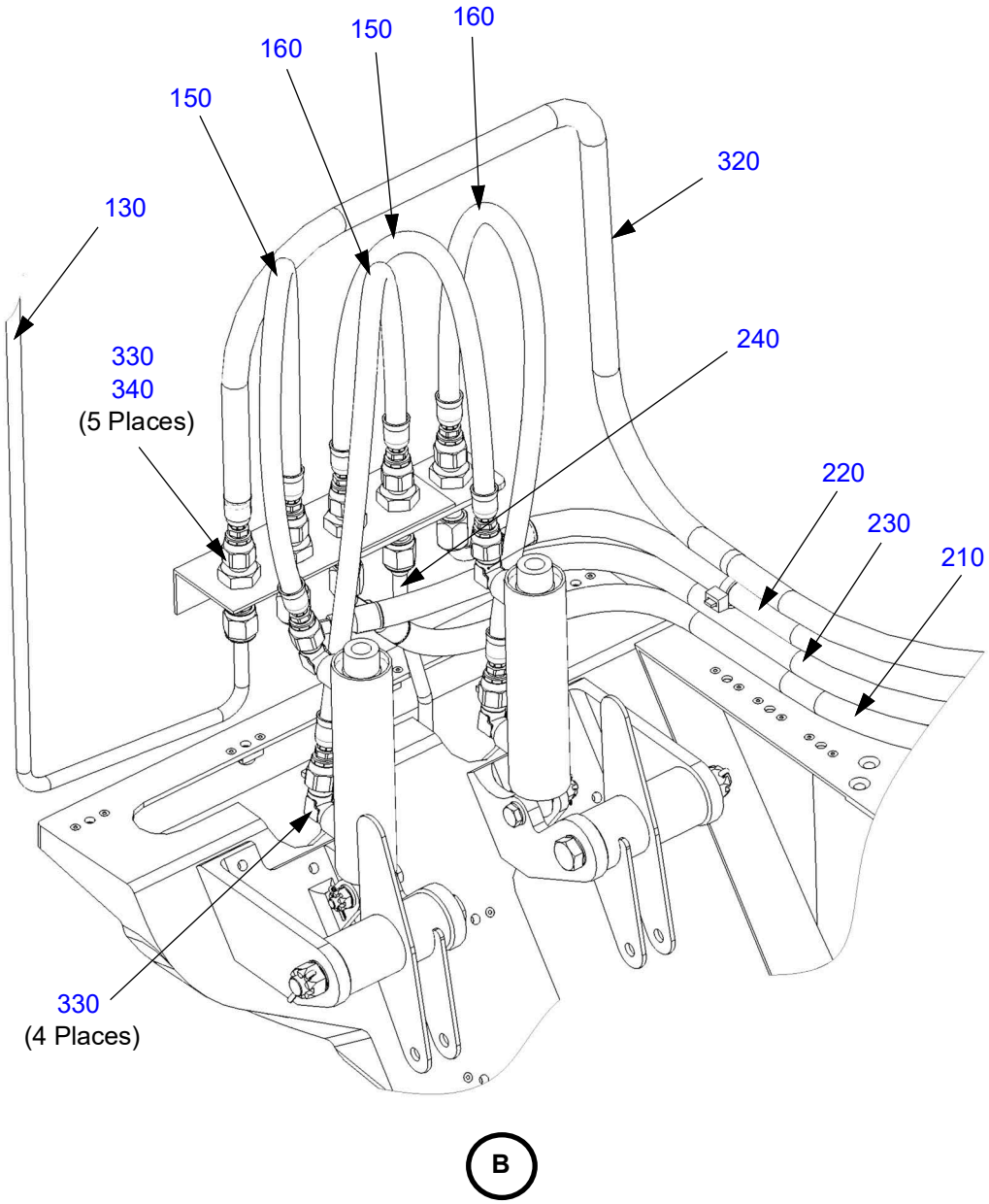

Figure 32-40.5: Brake Reservoir and Lines, Fuselage (Continued) (SN: K011 and on)

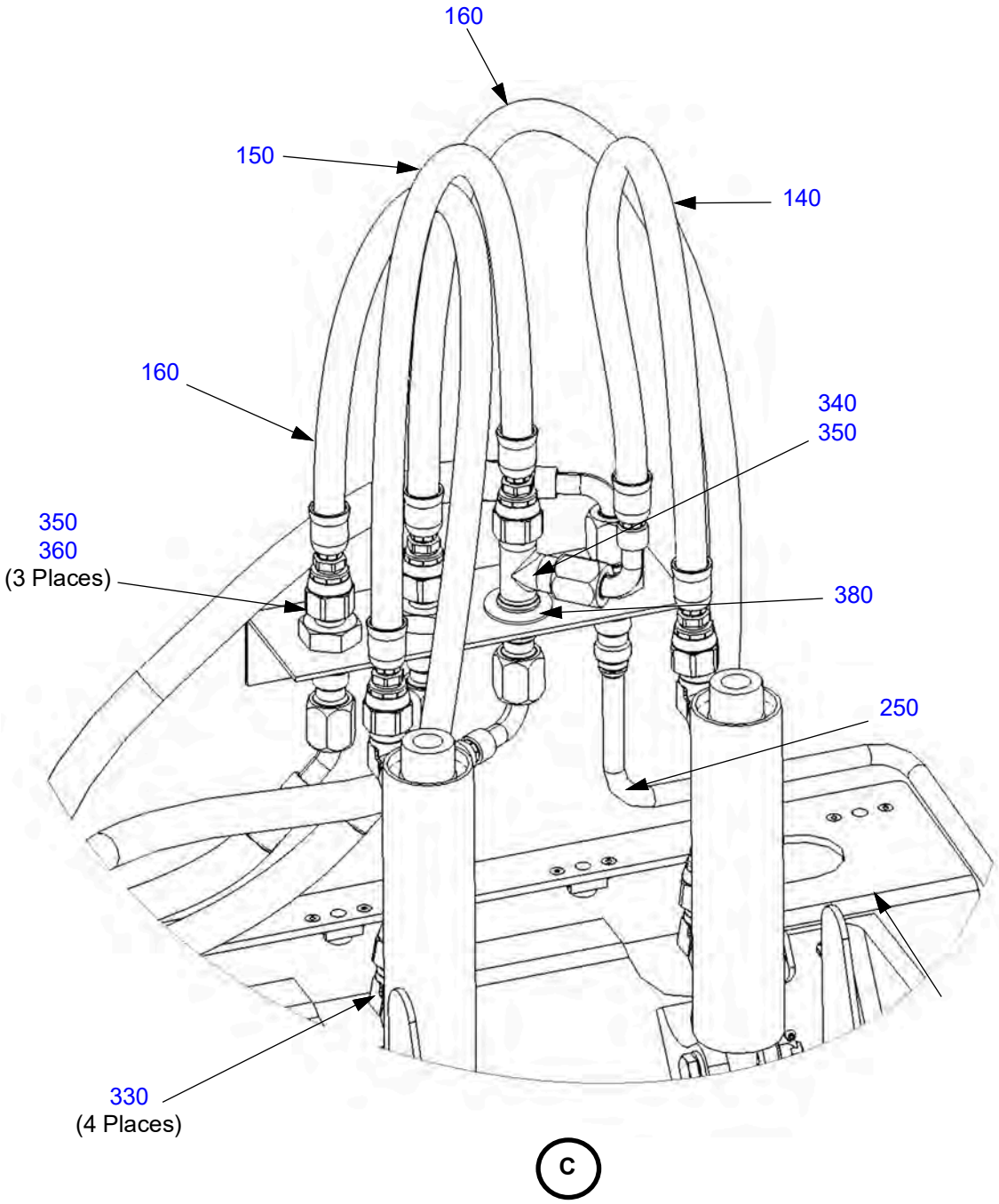

Figure 32-40.5: Brake Reservoir and Lines, Fuselage (Continued)

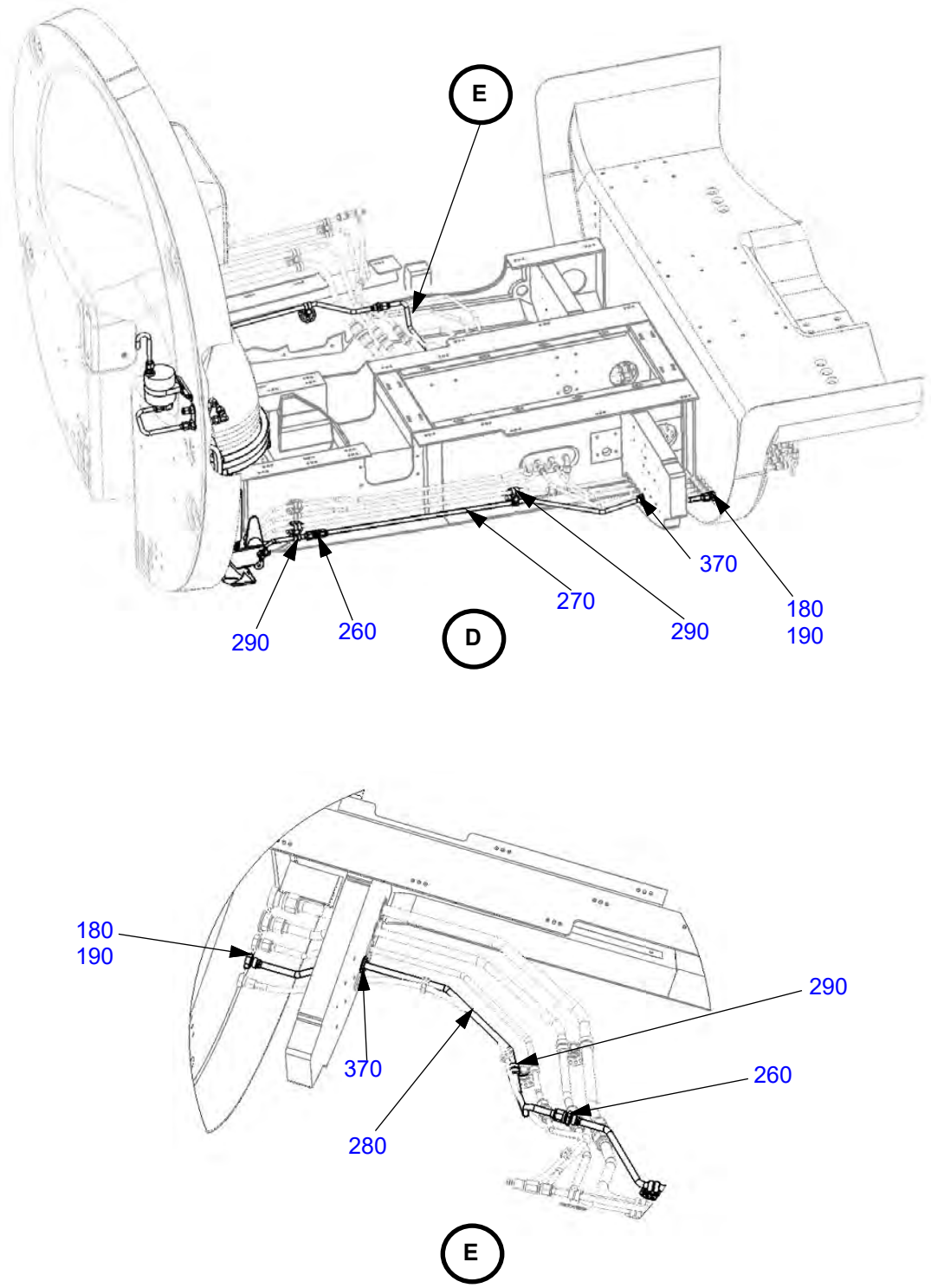

Table 32-40.5: Brake Reservoir and Lines, Fuselage *(Also SN:K003-K010 with SB-0017)

Figure Item Number	Part Number	Part Name	Effectivity Code	Amount in Assy.
10	PK99007056	Brake Reservoir	K003 and On	1
20	AK32401002	Tube Assembly, Brakes, Vent	K003 and On	1
30	AS5194W0402	Fitting, Adapter, Straight, Pipe To Tube	K003 and On	1
40	MS20822-4J	Elbow, Flared, Tube And Pipe Threads, 90°, Stainless Steel	K003 and On	1
50	AK32401003	Tube Assembly, Brakes, Reservoir To Fire-wall	K003 and On	1
60	AK32401009	Bracket Assembly, Mount, Brake Reservoir	K003 and On	1
70	PK29000004	Fitting, Union, Tube, 1.25 Bulkhead, 1/4" OD Tube	K003 and On	1
80	AS5178J04	Nut, Fitting, CRES, Ø.250 Tube x .438-20 Thread	K003 and On	1
90	4 C6X-SS	Parker: Fitting, 90 Deg Swivel, Male - Female Flare, 1/4" OD Tube	K003 and On	1
100	AN3-13A	Bolt, 10-32 x 1-13/32" Undrilled	K003 and On	2
110	AN3H3A	Bolt, 10-32 x 15/32" Drilled Head	K003 and On	2
120	NAS1149F0332P	Washer, Flat #10 x .032	K003 and On	4
130	AK32401004	Tube Assembly, Brakes, Firewall Aft	K003 and On	1
140	AE2460200E0140 171005-4CR-0140	Eaton/parker: Hose Assy, -4 x 14.0", Straight To 90 Deg Fittings	K003 and On	1
150	AE2460000E0140 171001-4CR-0140	Eaton/parker: Hose Assy, -4 x 14.0", Straight Fittings	K003 and On	3
160	AE2460000E0160 171001-4CR-0160	Eaton/parker: Hose Assy, -4 x 16.0", Straight Fittings	K003 and On	4
170	AS1033J040404	Fitting, Tee, Bulkhead On Run, Flared, 1/4" OD Tube	K003 and On	1
180	AS5406J04	Fitting, Union, Tube, .375 Bulkhead, 1/4" OD Tube	K003 and On	9
190	AS5178J04	Nut, Fitting, CRES, Ø.250 Tube x .438-20 Thread	K003 and On	10

Figure Item Number	Part Number	Part Name	Effectivity Code	Amount in Assy.
200	MS20822-4J	Elbow, Flared, Tube And Pipe Threads, 90°, Stainless Steel	K003 and On	8
210	AE4695E0420-000 171K060B0420C0 00	Eaton/parker: Hose Assy, Int Chafe Sleeve, -4 x 42.0", 45 Deg Fittings	K003 and On	1
220	AE4696E0420-180 171K062B0420C1 80	Eaton/parker: Hose Assy, Int Chafe Sleeve, -4 x 42.0", 45 To 90 Deg Fittings	K003 and On	1
230	AE4696E0400-000 171K062B0400C0 00	Eaton/parker: Hose Assy, Int Chafe Sleeve, -4 x 40.0", 45 To 90 Deg Fittings	K003 and On	1
240	AK32401005	Tube Assembly, Brakes, Fwd Left	K003 and On	1
250	AK32401006	Tube Assembly, Brakes, Fwd Right	K003 and On	1
260	AN815-4J	Union, Flared Tube	K003 and On	2
270	AK32401007	Tube Assembly, Brakes, Aft Left	K003 and On	1
280	AK32401008	Tube Assembly, Brakes, Aft Right	K003 and On	1
290	AS21919WDG04	Clamp, Loop Type, Cushioned, Ø .250	K003 and On	5
300	AN3-3A	Bolt, 10-32 x 15/32" Undrilled	K003 and On	2
310	NAS1149F0332P	Washer, Flat #10 x .032	K003 and On	2
320	AE2463511E05601 71K005-4CR-0560	Eaton/parker: Hose Assy, Int Chafe Sleeve, -4 x 56.0", Straight to 90 Deg Fittings	K011 and On*	1
330	MS20822-4J	Elbow, Flared, Tube And Pipe Threads, 90°, Stainless Steel	K011 and On*	8
340	AS5178J04	Nut, Fitting, CRES, Ø.250 Tube x .438-20 Thread	K011 and On*	9
350	AS1033J040404	Fitting, Tee, Bulkhead On Run, Flared, 1/4" O.D. Tube	K011 and On*	1
360	AS5406J04	Fitting, Union, Tube, .375 Bulkhead, 1/4" O.D. Tube	K011 and On*	8
370	MS35489-100	Grommet, .438 I.D. x .938O.D. x .250 Groove	K011 and On*	2
380	NAS1149F0763P	Washer, Flat, 0.453 I.D. x 0.750 O.D, .063 Thick	K011 and On*	1

Figure 32-40.6: Brake Lines, Wings

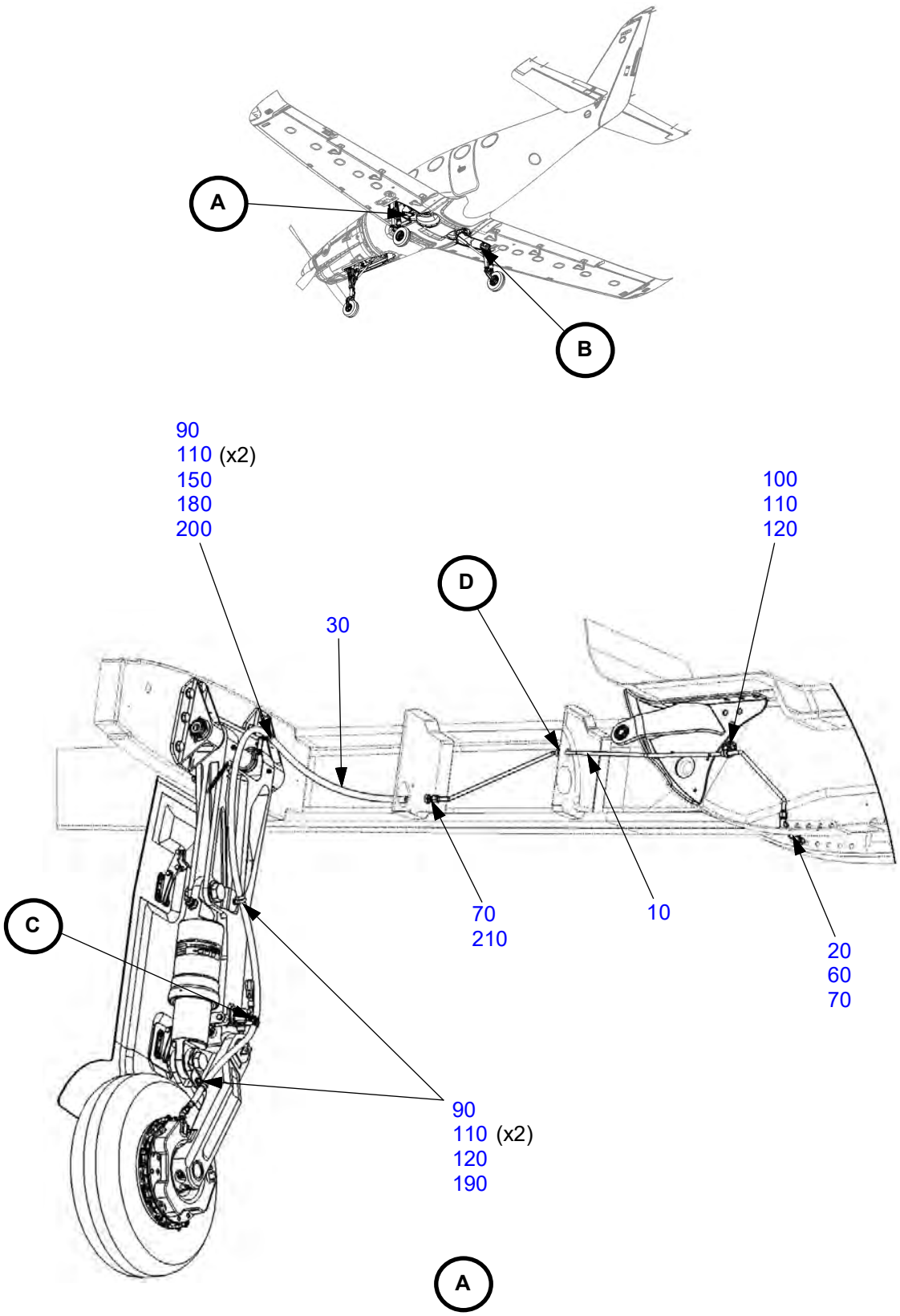

Figure 32-40.6: Brake Lines, Wings (Continued)

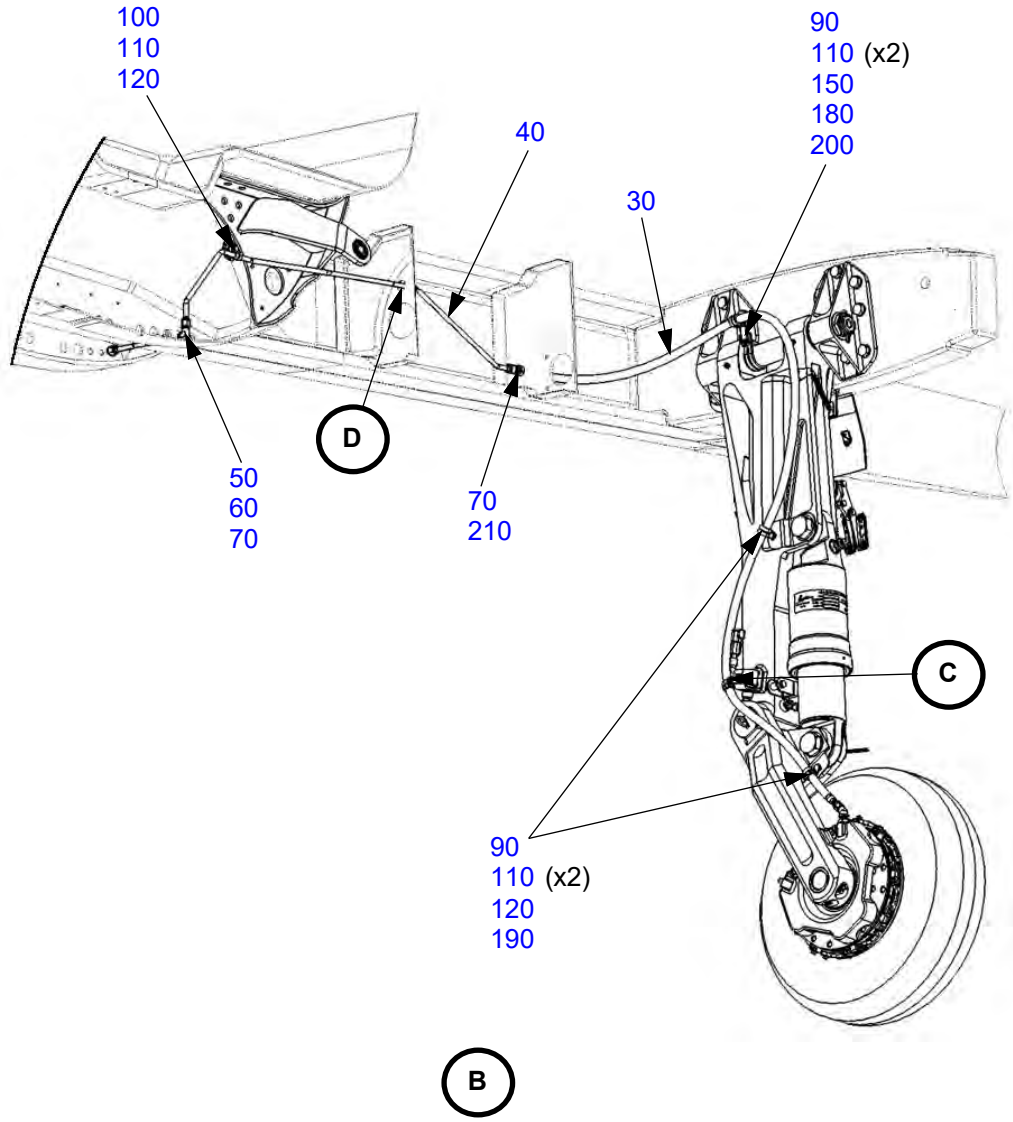

Figure 32-40.6: Brake Lines, Wings (Continued)

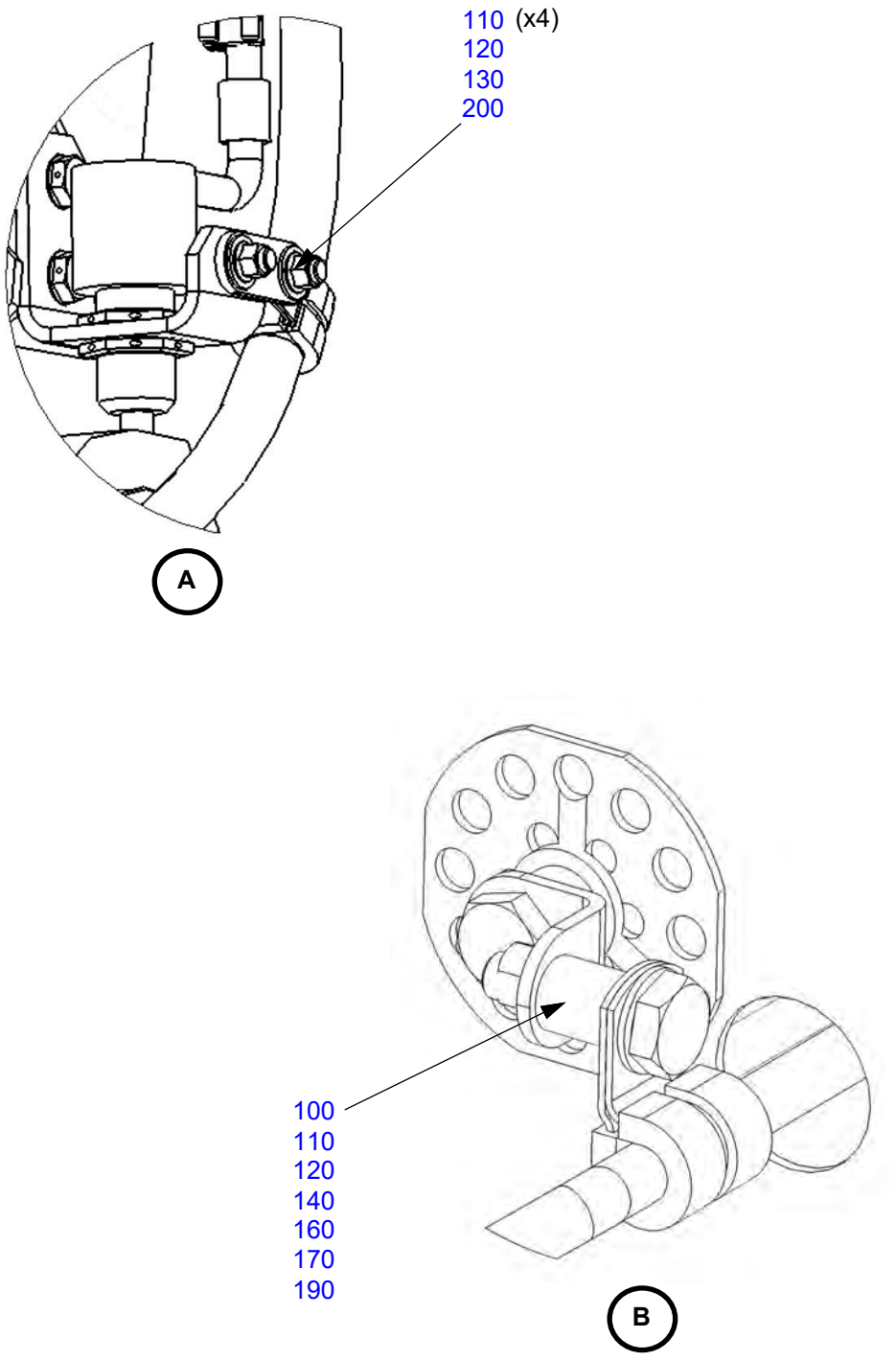

Table 32-40.6: Brake Lines, Wings

Figure Item Number	Part Number	Part Name	Effectivity Code	Amount in Assy.
10	AK32401103	Tube Assembly, Brakes, Left Wing	K003 and On	1
20	AK29171000	Tube Assembly, Spar Bay, Pilot Side	K003 and On	1
30	AE2463509E0640 171K001-4CR-0640	Eaton/parker: Hose Assy, Int Chafe Sleeve, -4 x 64.0", Straight Fittings	K003 and On	2
40	AK32401104	Tube Assembly, Brakes, Right Wing	K003 and On	1
50	AK29173200	Tube Assembly, Spar Bay, Co-Pilot Side	K003 and On	1
60	AS1038J0404	Fitting, Elbow, 90 Deg, Bulkhead, Flared, 1/4" ODTube	K003 and On	2
70	AS5178J04	Nut, Fitting, CRES, Ø.250 Tube x .438-20 Thread	K003 and On	3
80	AS21919WDG24	Clamp, Loop Type, Cushioned, Ø 1.500	K003 and On	2
90	AS21919WDG08	Clamp, Loop Type, Cushioned, Ø .500	K003 and On	2
100	AS21919WDG04	Clamp, Loop Type, Cushioned, Ø .250	K003 and On	3
110	NAS1149F0332P	Washer, Flat #10 x .032	K003 and On	10
120	AN3-3A	Bolt, 10-32 x 15/32" Undrilled	K003 and On	4
130	AN3-4A	Bolt, 10-32 x 17/32" Undrilled	K003 and On	1
140	AN3-6A	Bolt, 10-32 x 25/32" Undrilled	K003 and On	1
150	AN3-14A	Bolt, 10-32 x 1-17/32" Undrilled	K003 and On	1
160	AN743-12	Bracket, Support Clamp, Al, .204	K003 and On	1
170	NAS43DD3-24N	Spacer, Aluminum .214 ID x .312 OD x .375	K003 and On	1
180	NAS43DD3-64N	Spacer, Aluminum .214 ID x .312 OD x 1.000	K003 and On	2
190	MS21042L3	Nut, Self-locking, 450°, Reduced #10-32	K003 and On	4
200	PK52100122	Latch Link, Door	K003 and On	1
210	AS5406J04	Fitting, Union, Tube, .375 Bulkhead, 1/4" OD Tube	K003 and On	2

This Page Intentionally Left Blank

STEERING

Figure 32-50.1: Steering Assembly

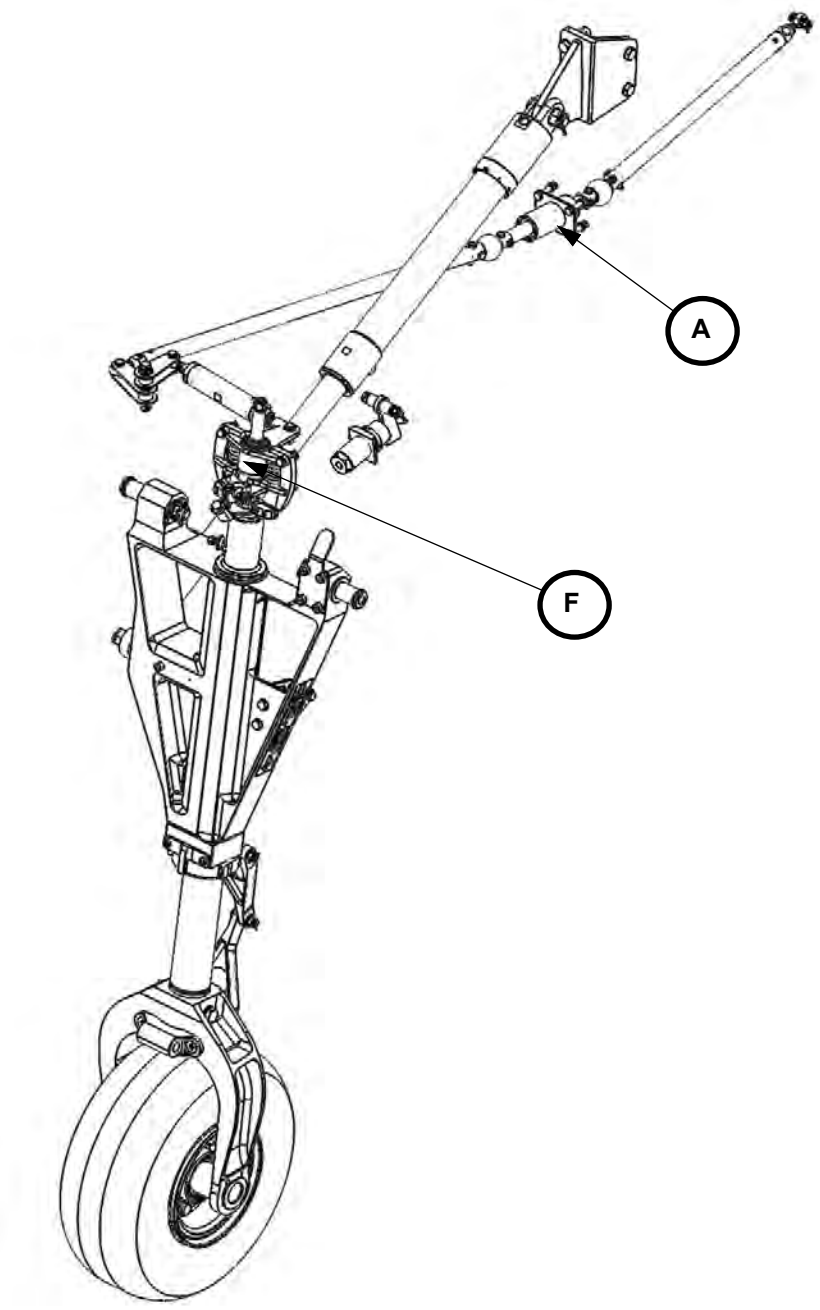

Figure 32-50.1: Steering Assembly (Continued)

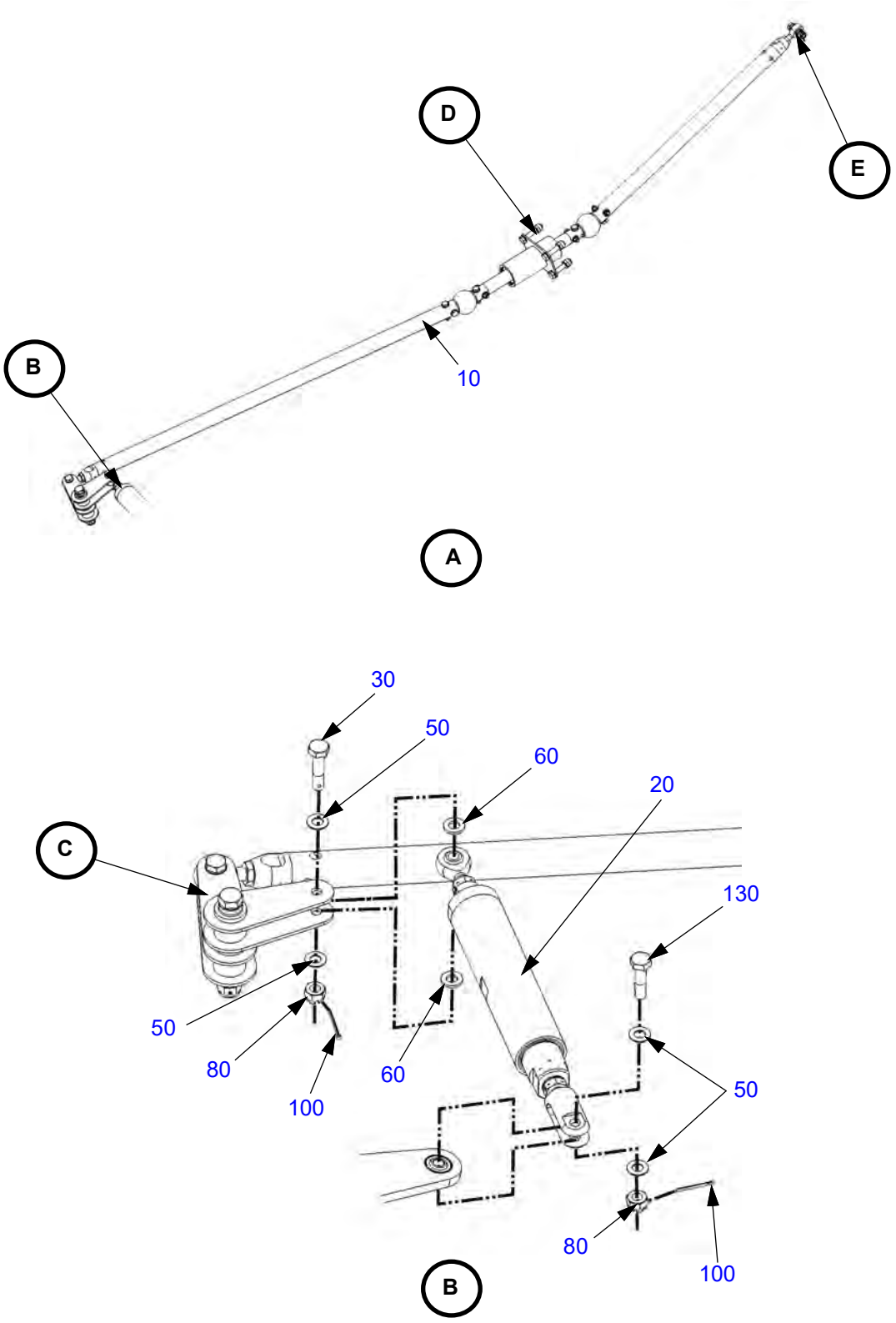

Figure 32-50.1: Steering Assembly (Continued)

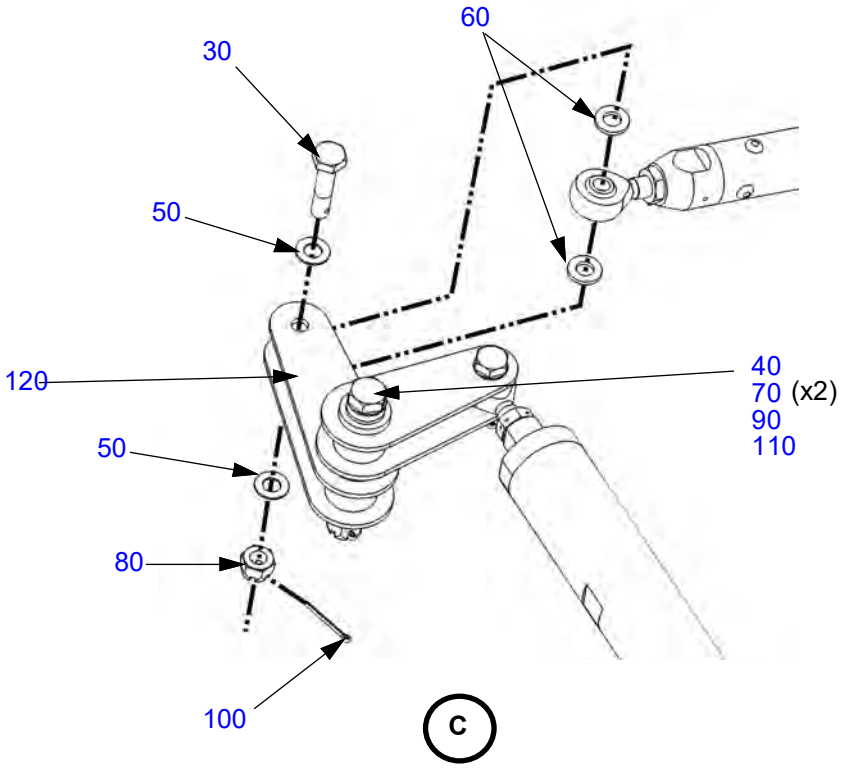

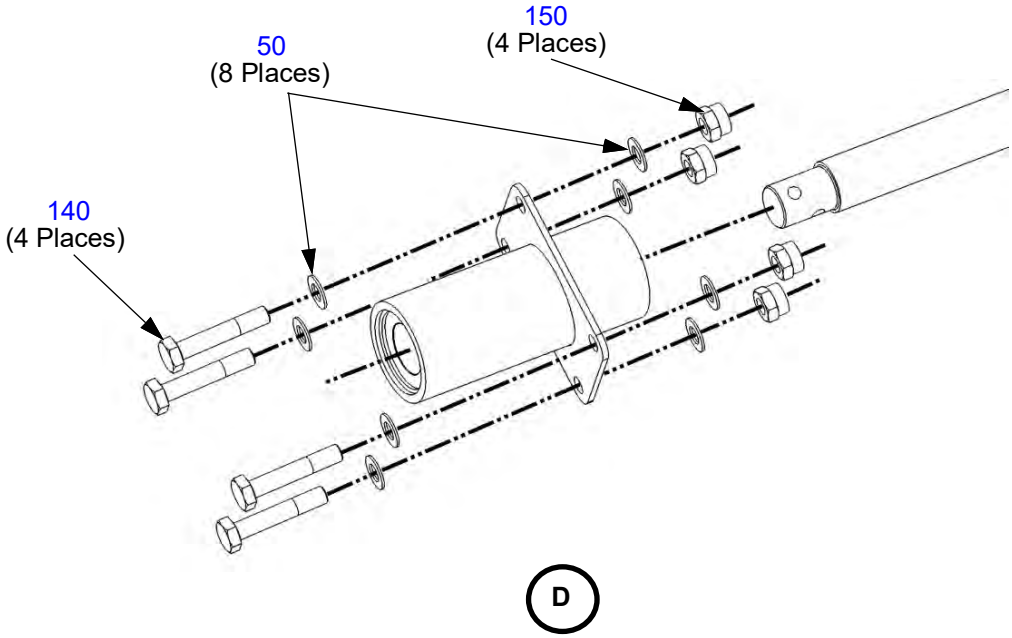

Figure 32-50.1: Steering Assembly (Continued)

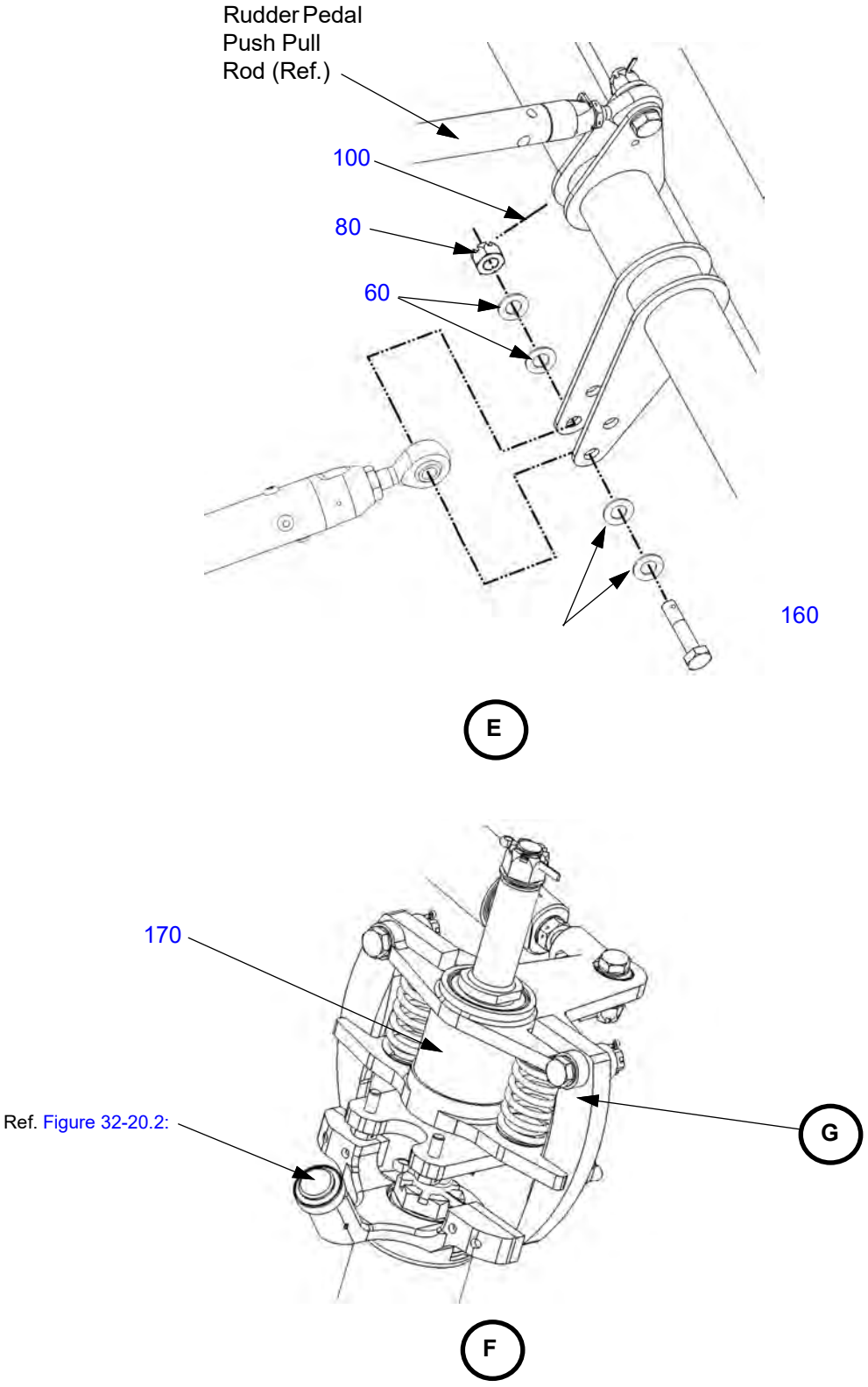

Figure 32-50.1: Steering Assembly (Continued)

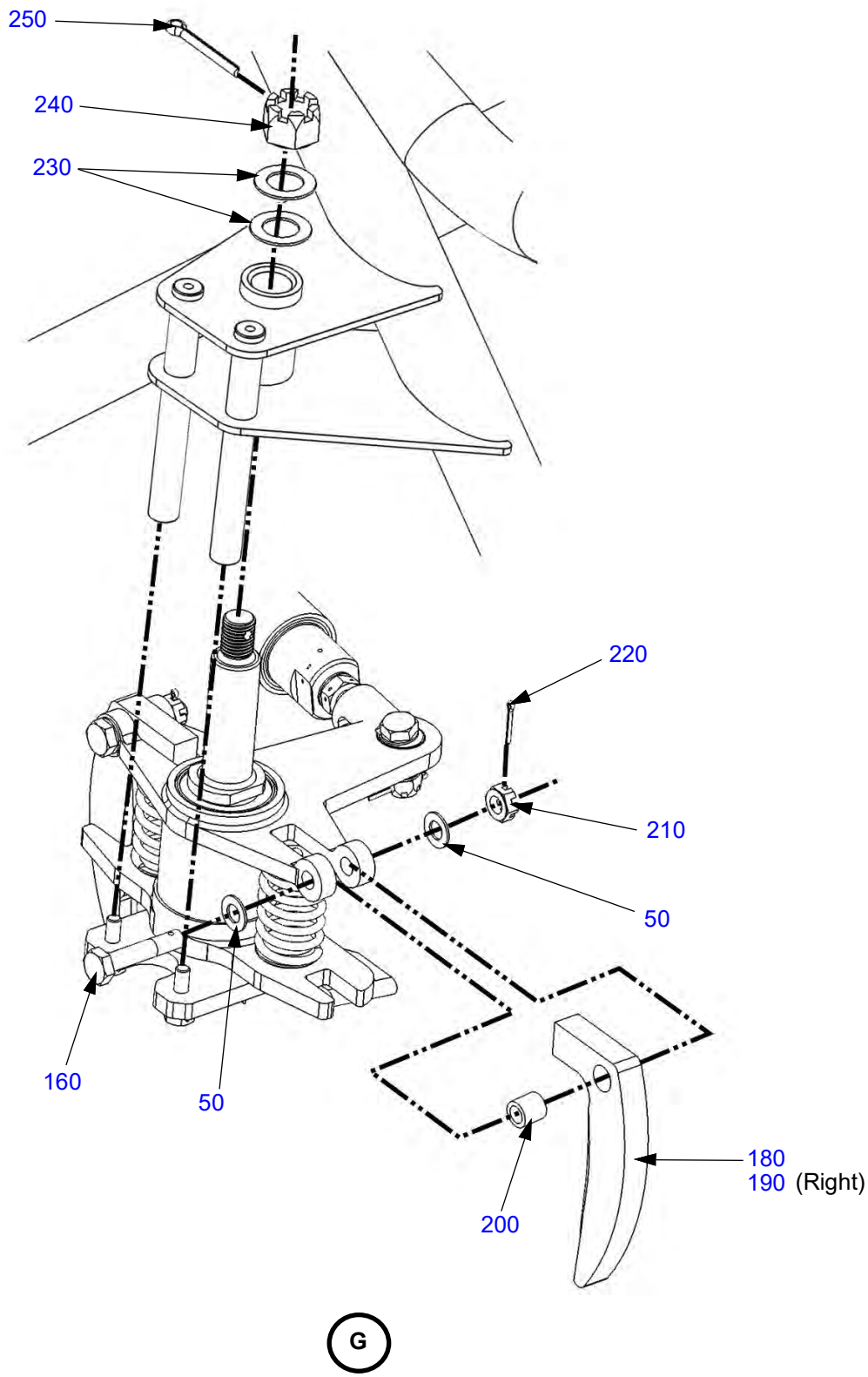

Table 32-50.1: Steering Assembly

Figure Item Number	Part Number	Part Name	Effectivity Code	Amount in Assy.
10	AK32503000	NLG Steering Arm Assembly	K003 and On	1
20	AK32502000	Steering Vibration Isolator	K003 and On	1
30	AN4-11	Bolt, 1/4-28 x 1-5/32" Drilled Shank	K003 and On	2
40	AN5-27	Bolt, 5/16-24 x 2-31/32" Drilled Shank	K003 and On	1
50	NAS1149F0432P	Washer, Flat 1/4 x .032	K003 and On	18
60	NAS1149F0463P	Washer, Flat 1/4 x .063	K003 and On	8
70	NAS1149F0532P	Washer, Flat 5/16 x .032	K003 and On	2
80	AN310-4	Nut, Castellated, Steel 1/4-28	K003 and On	4
90	AN310-5	Nut, Castellated, Steel 5/16-24	K003 and On	1
100	MS24665-134	Pin, Cotter, Cad Steel Ø .062 x .75	K003 and On	4
110	MS24665-136	Pin, Cotter, Cad Steel Ø .062 x 1.00	K003 and On	1
120	AK32504000	Assy, Bellcrank, NLG Steering	K003 and On	1
130	AN4-10	Bolt, 1/4-28 x 1-1/32" Drilled Shank	K003 and On	1
140	AN4-13A	Bolt, 1/4-28 x 1-13/32" Undrilled	K003 and On	4
150	MS21045L4	Nut, Self-locking, Steel 1/4-28	K003 and On	4
160	AN4-12	Bolt, 1/4-28 x 1-9/32" Drilled Shank	K003 and On	3
170	AK32501000	Steering/Kickout Assy	K003 and On	1
180	PK32501003	Arm, Kickout, Left	K003 and On	1
190	PK32501004	Arm, Kickout, Right	K003 and On	1
200	PK32501008	Bushing, Arm, Kickout	K003 and On	2
210	AN320-4	Nut, Castellated, Shear, Steel 1/4-28	K003 and On	2
220	MS24665-132	Pin, Cotter, Cad Steel Ø .062 x .50	K003 and On	2
230	AN320-7	Nut, Castellated, Shear, Steel 7/16-20	K003 and On	1
240	MS27183-15	Washer, Flat, .438 ID x 1.000 OD x .083	K003 and On	2
250	MS24665-353	Pin, Cotter, Cad Steel Ø .125 x 1.00	K003 and On	1

POSITIONING, WARNING, AND GROUND SAFETY SWITCH

Figure 32-60.1: Main and Nose Gear Up Switches

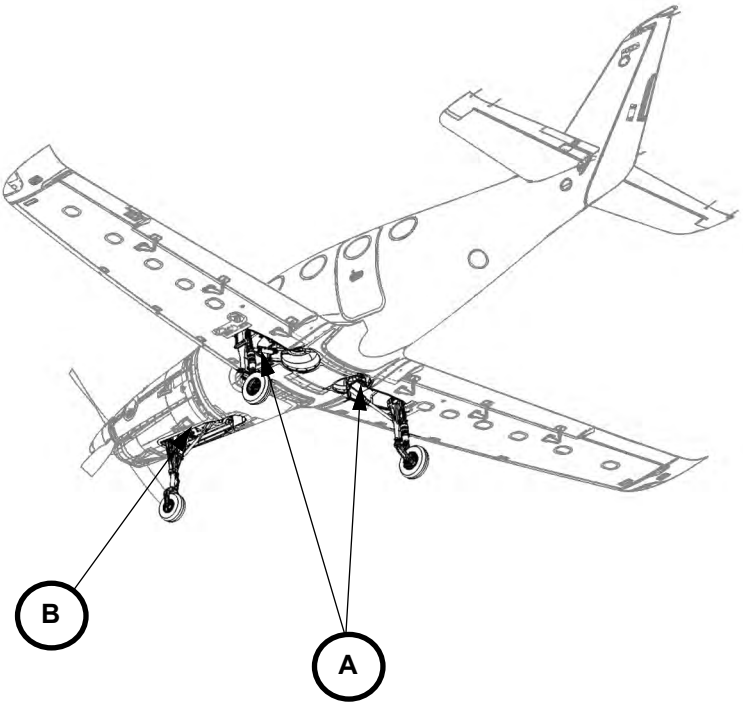

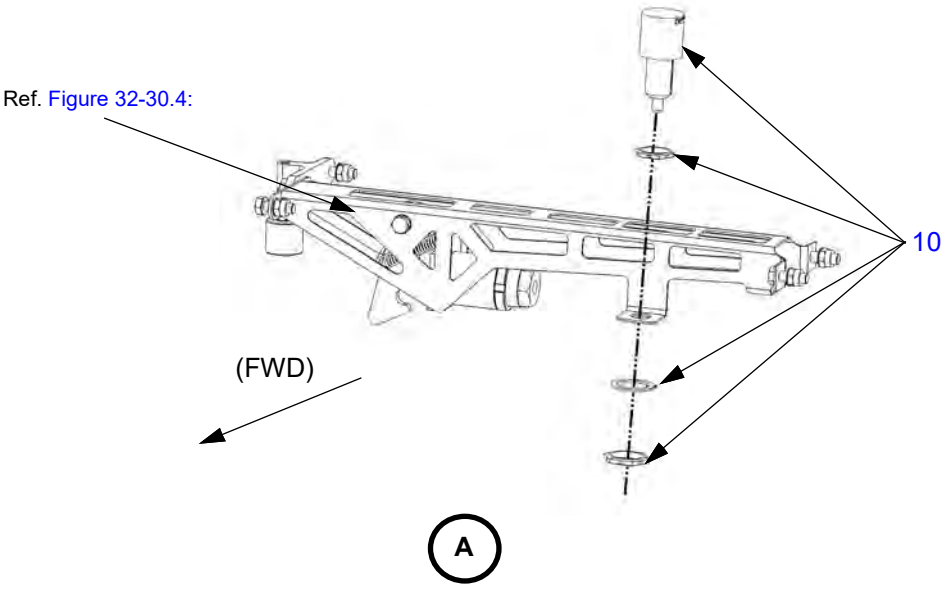

(Left side shown, right side opposite.)

Figure 32-60.1: Main and Nose Gear Up Switches (Continued)

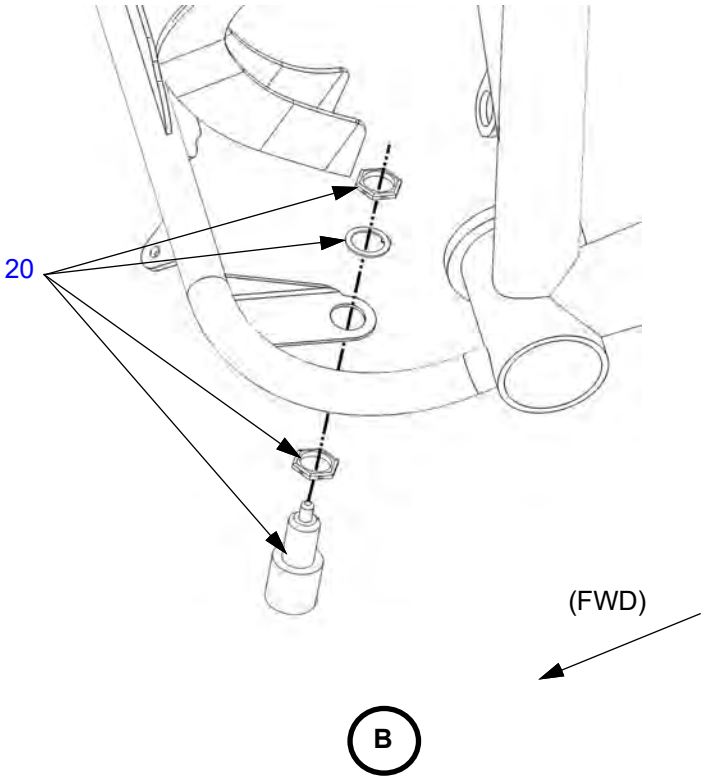

Table 32-60.1: Main and Nose Gear Up Switches

Figure Item Number	Part Number	Part Name	Effectivity Code	Amount in Assy.
10	AK32303401	Gear Up Switch, Connector, Main Gear	K003 and On	2
20	AK32204002	Assy, Limit Switch, Connector, Nose Gear	K003 and On	1

Figure 32-60.2: Weight on Wheels Switch

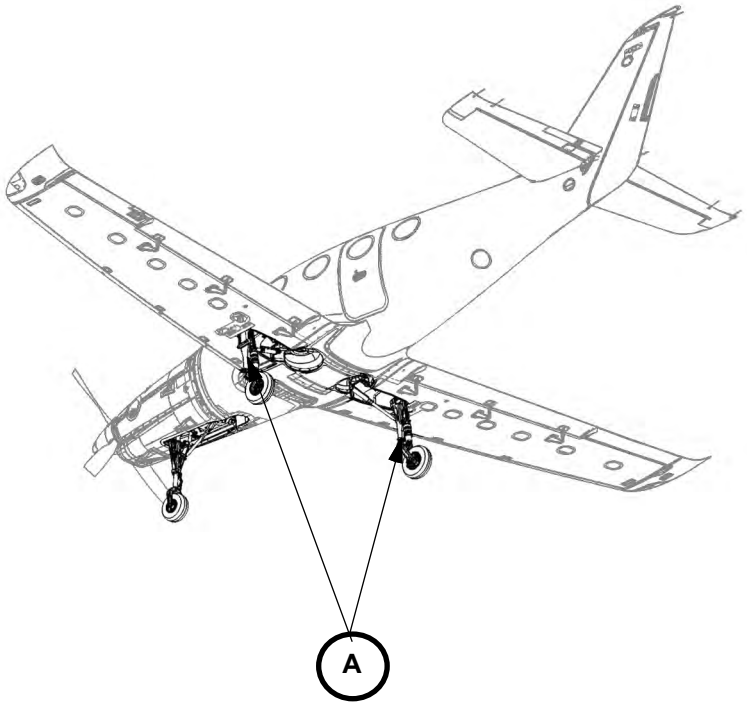

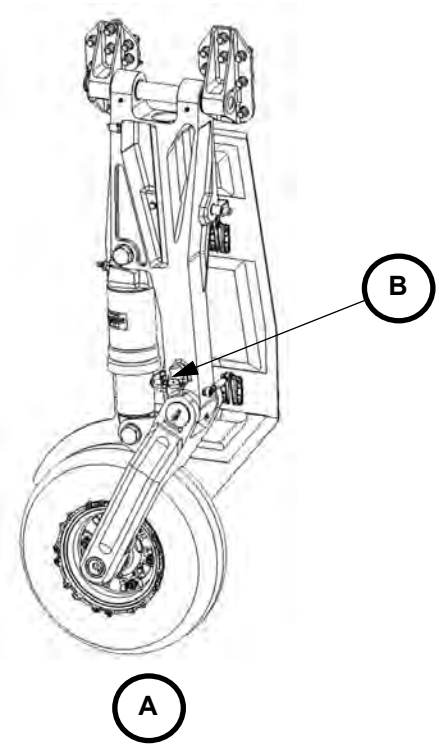

(Left side shown, right side opposite.)

Figure 32-60.2: Weight on Wheels Switch (Continued)

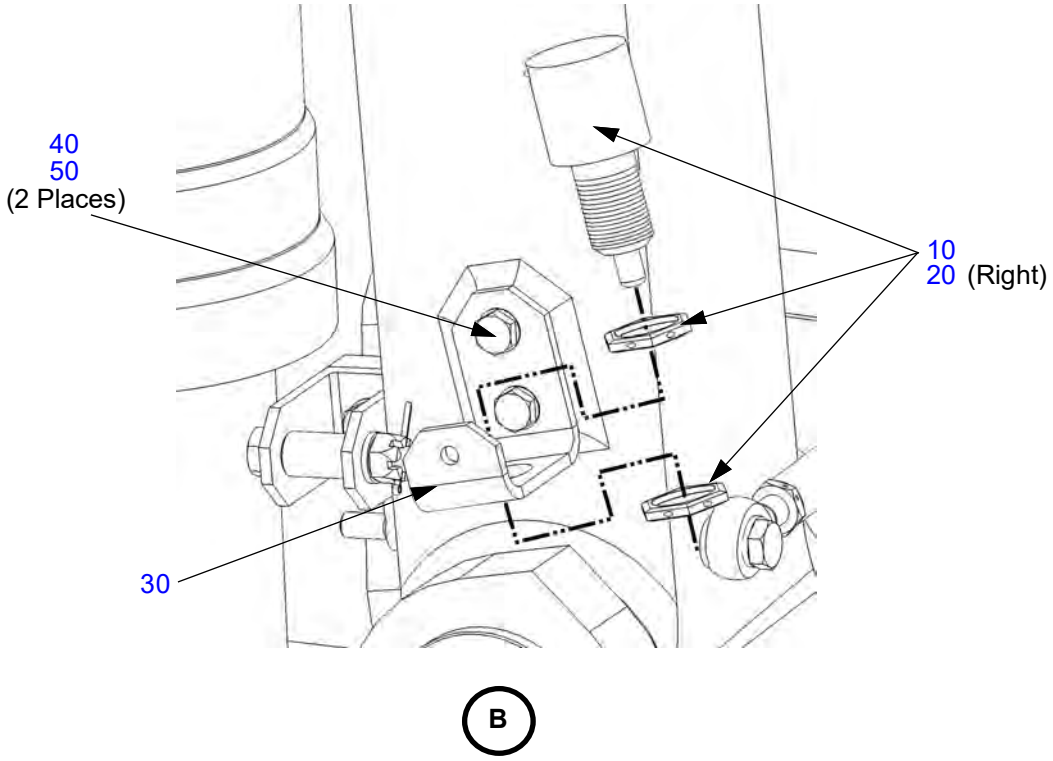

(Left side shown, right side opposite.)

Table 32-60.2: Weight on Wheels Switch

Figure Item Number	Part Number	Part Name	Effectivity Code	Amount in Assy.
10	AK32303101	Left Wow Switch, Connector, Main Gear	K003 and On	1
20	AK32304101	Right Wow Switch, Connector, Main Gear	K003 and On	1
30	PK32101002	Weight On Wheel Switch Bracket, MLG	K003 and On	2
40	AN3H4A	Bolt, 10-32 x 17/32" Drilled Head	K003 and On	4
50	NAS1149F0316P	Washer, Flat #10 x .016	K003 and On	4

CHAPTER
33

Lights

This Page Intentionally Left Blank

Table of Contents
and
List of Effective Pages

Chapter/Section	Page Number	Effective Date
33-Title	Page 1	03 Apr 2020
33-Title	Page 2	03 Apr 2020
33-LOEP	Page 1	26 Mar 2024
33-LOEP	Page 2	03 Apr 2020
33-TOC	Page 1	13 Jan 2023
33-TOC	Page 2	03 Apr 2020
Flight Compartment		
33-10	Page 1	03 Apr 2020
33-10	Page 2	03 Apr 2020
33-10	Page 3	13 Jan 2023
33-10	Page 4	26 Mar 2024
Passenger Compartment		
33-20	Page 1	03 Apr 2020
33-20	Page 2	03 Apr 2020
33-20	Page 3	13 Jan 2023
33-20	Page 4	13 Jan 2023
33-20	Page 5	03 Apr 2020
33-20	Page 6	03 Apr 2020
Exterior Lighting		
33-40	Page 1	13 Jan 2023
33-40	Page 2	13 Jan 2023
33-40	Page 3	13 Jan 2023
33-40	Page 4	13 Jan 2023
33-40	Page 5	13 Jan 2023
33-40	Page 6	13 Jan 2023
33-40	Page 7	13 Jan 2023
33-40	Page 8	13 Jan 2023
33-40	Page 9	13 Jan 2023
33-40	Page 10	13 Jan 2023
33-40	Page 11	13 Jan 2023
33-40	Page 12	13 Jan 2023
33-40	Page 13	13 Jan 2023
33-40	Page 14	13 Jan 2023

This Page Intentionally Left Blank

CHAPTER 33

Table of Contents

List of Effective Pages ..... 33-LOEP / Page 1
Table of Contents ..... 33-TOC / Page1

Paragraph **Page Number**

Flight Compartment
Figure 33-10.1: Overhead Light Assembly and Glareshield Light Bar ..... 33-10 / Page 1
Table 33-10.1: Overhead Light Assembly and Glareshield Light Bar ..... 33-10 / Page 2
Figure 33-10.2: Dimmer panel ..... 33-10 / Page 3
Table 33-10.2: Dimmer Panel ..... 33-10 / Page 4

Passenger Compartment
Figure 33-20.1: Reading and Cargo Lights ..... 33-20 / Page 1
Table 33-20.1: Reading and Cargo Lights ..... 33-20 / Page 2
Figure 33-20.2: Wash Lights ..... 33-20 / Page 3
Table 33-20.2: Wash Lights ..... 33-20 / Page 4
Figure 33-20.3: Accent Lights ..... 33-20 / Page 5
Table 33-20.3: Accent Lights ..... 33-20 / Page 6

Exterior Lighting
Figure 33-40.1: Position and Strobe Lights ..... 33-40 / Page 1
Table 33-40.1: Position and Strobe Lights ..... 33-40 / Page 3
Figure 33-40.2: Landing and Taxi Lights (K003 - K028) ..... 33-40 / Page 4
Table 33-40.2: Landing and Taxi Lights (K003 - K028) ..... 33-40 / Page 6
Figure 33-40.3: Landing and Taxi Lights (K029 and On) ..... 33-40 / Page 7
Table 33-40.3: Landing and Taxi Lights (K029 and On) ..... 33-40 / Page 11
Figure 33-40.4: Ice Light ..... 33-40 / Page 13
Table 33-40.4: Ice Light ..... 33-40 / Page 14

This Page Intentionally Left Blank

FLIGHT COMPARTMENT

Figure 33-10.1: Overhead Light Assembly and Glareshield Light Bar

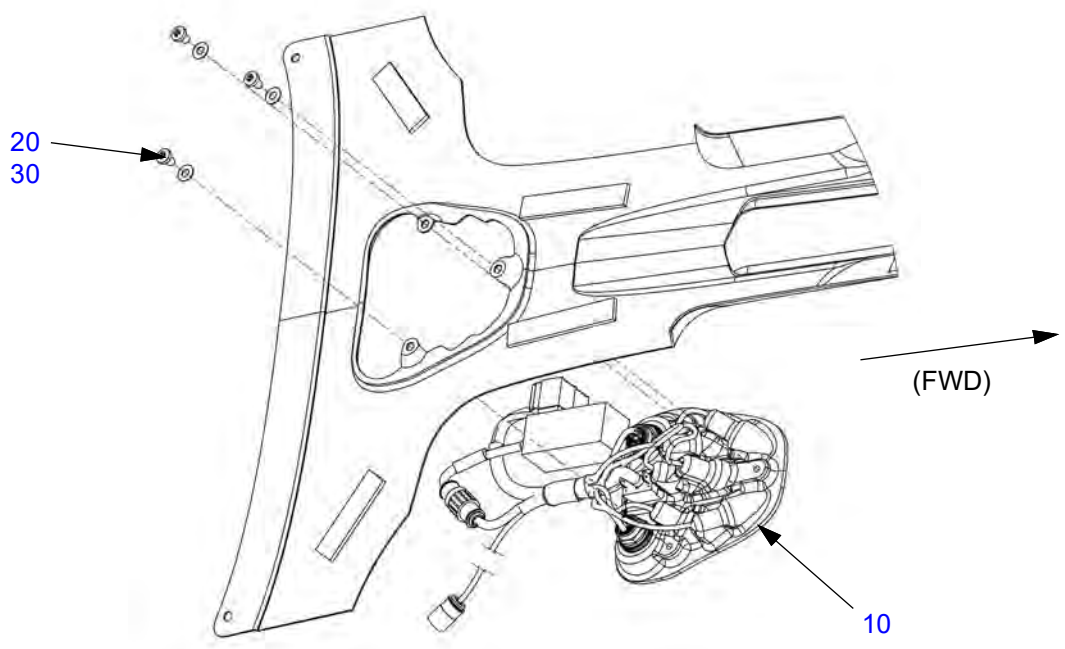

View Looking Down

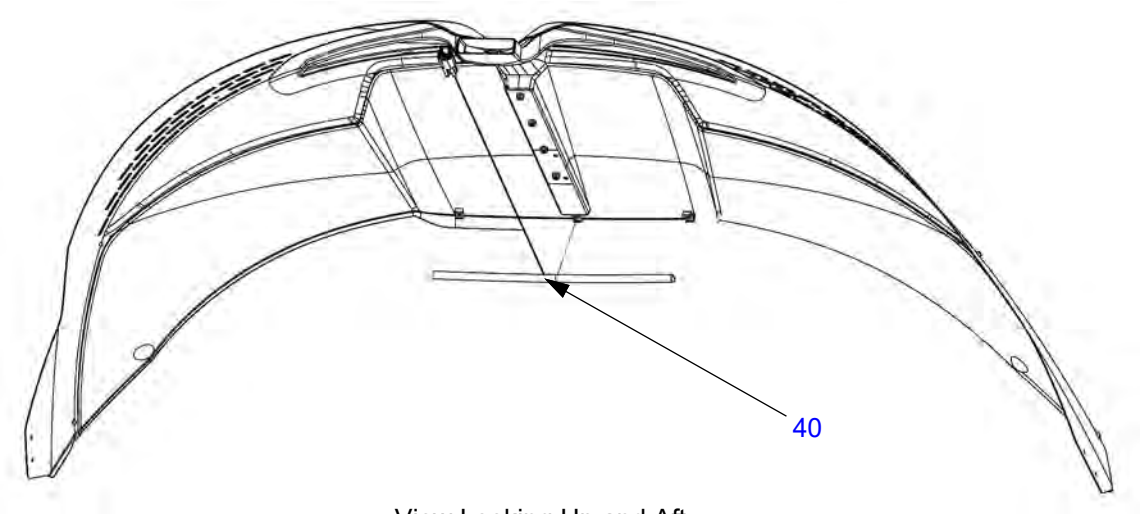

View Looking Up and Aft

Table 33-10.1: Overhead Light Assembly and Glareshield Light Bar

Figure Item Number	Part Number	Part Name	Effectivity Code	Amount in Assy.
10	AK25223601	Over Head Lighting Assembly	K003 and On	1
20	MS27039-0804	Screw, Pan Head, .164 x .281 Lg.	K003 and On	3
30	NAS1149FN816P	Washer, Flat #8 x .016	K003 and On	3
40	AK25123004	Light Assy, Glare Shield Base	K003 and On	1

Figure 33-10.2: Dimmer panel

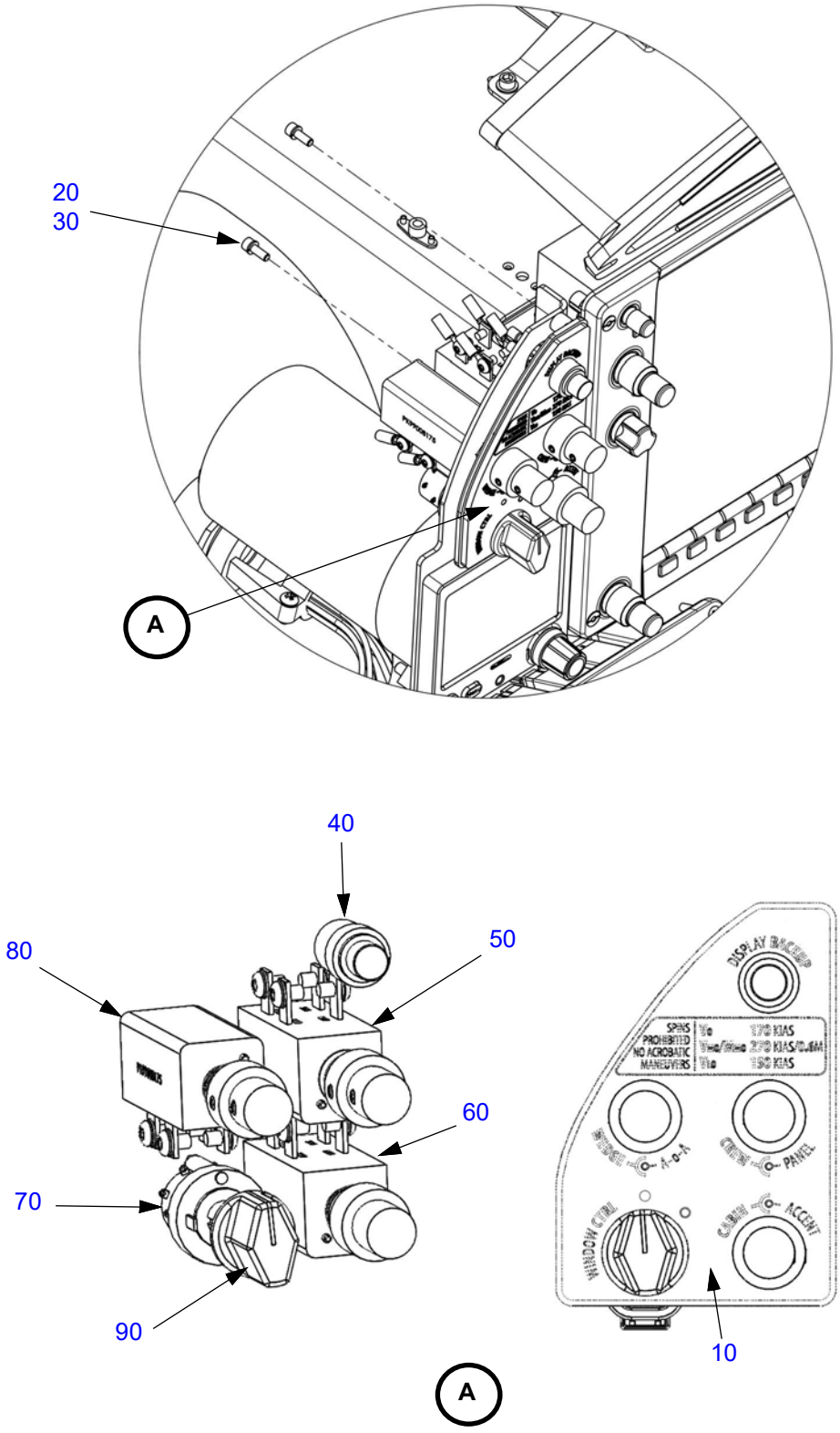

Table 33-10.2: Dimmer Panel

Figure Item Number	Part Number	Part Name	Effectivity Code	Amount in Assy.
10	PK39108001	Light Plate, Dimmer Panel	K003 and On	1
20	NAS1352-06-6P	Screw, Socket Head .138-32 x .375	K003 and On	3
30	MS35338-41	Washer, Lock-spring, Ø.138	K003 and On	3
40	PK99008172	Pushbutton Switch, Alternate Action, Red Cap	K003 and On	1
50	PK99008174	Dimmer Control, Dual	K003 and On	1
60	PK99008155	Dimmer Control, Dual	K003 and On	1
70	PK99008161	Switch, Rotary, 3 Position	K003 and On	1
80	PK99008175	Dimmer Control, Dual	K003 and On	1
90	TL8507-03BA1	Knob, Tactile Series, 1/4" Hole, Black	K003 and On	1

PASSENGER COMPARTMENT

Figure 33-20.1: Reading and Cargo Lights

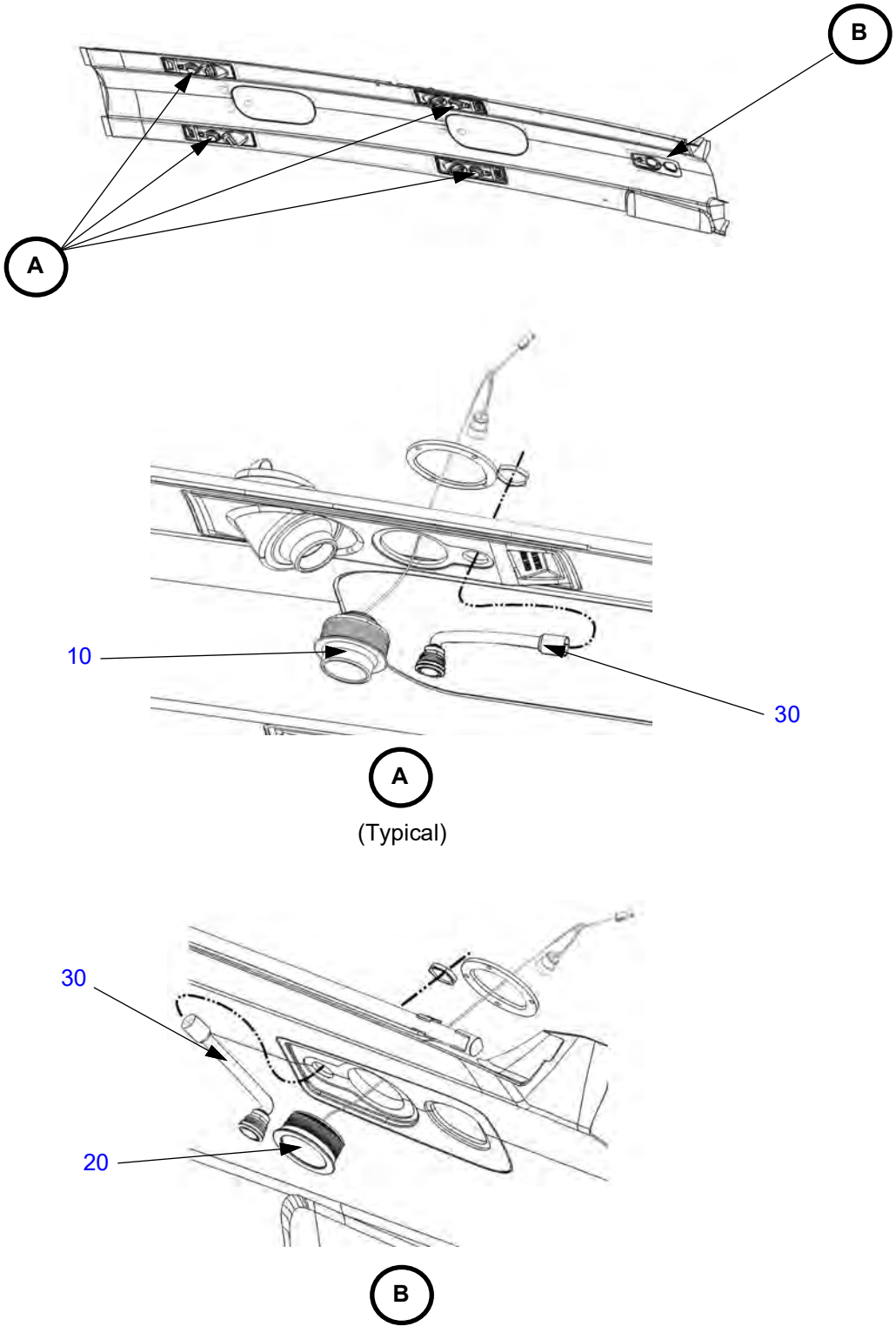

Table 33-20.1: Reading and Cargo Lights

Figure Item Number	Part Number	Part Name	Effectivity Code	Amount in Assy.
10	AK25223411	Reading Light, Switch, Connector	K003 and On	4
20	AK25223412	Cargo Light, Switch, Connector	K003 and On	1
30	AK25223413	Mechanical Light Switch, Assy	K003 and On	5

Figure 33-20.2: Wash Lights

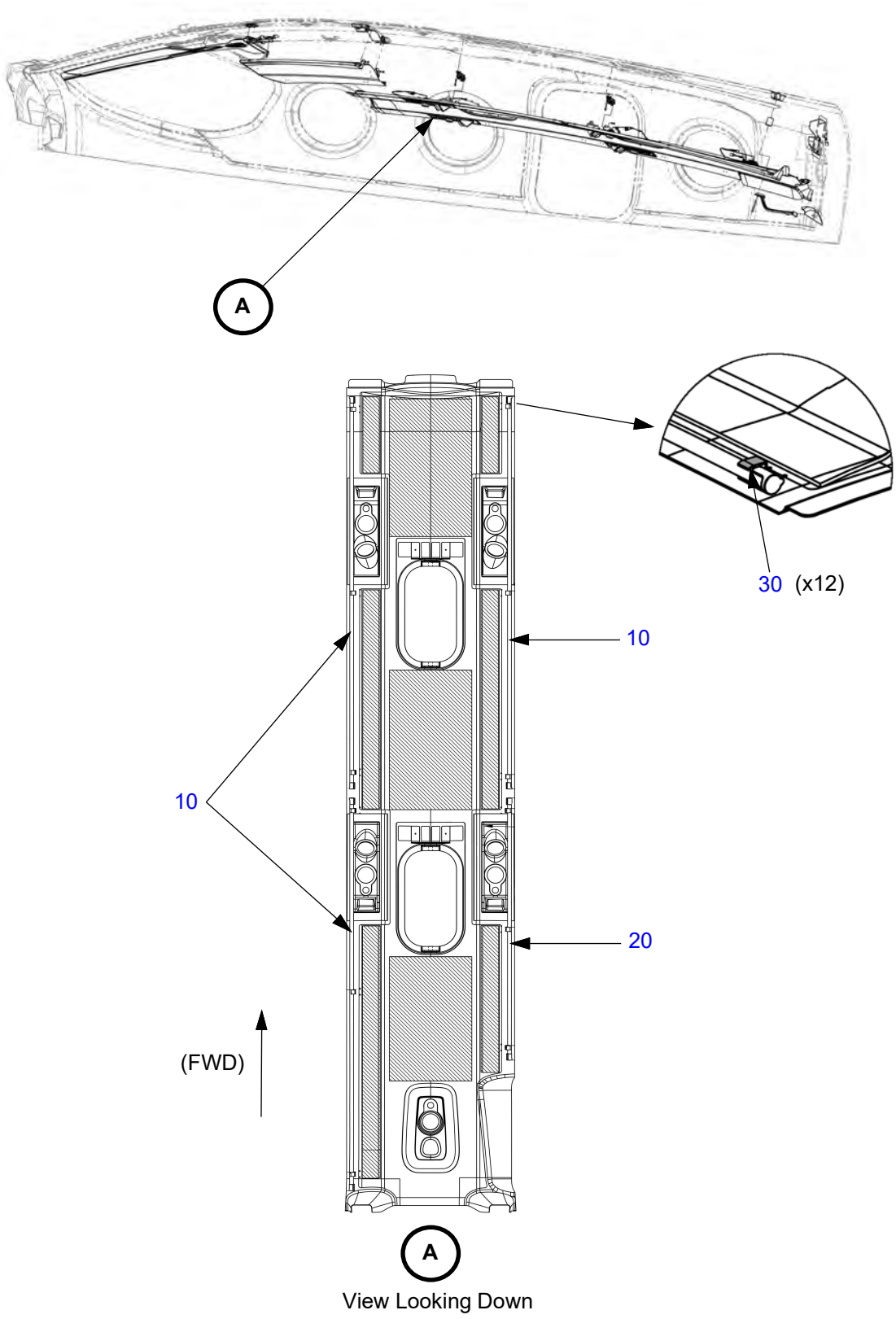

Table 33-20.2: Wash Lights

Figure Item Number	Part Number	Part Name	Effectivity Code	Amount in Assy.
10	L-1235-1220	Led, Rope, House Light, 48"	K003 and On	3
20	L-1235-813	Led, Rope, House Light, 32"	K003 and On	1
30	N5120B	Lighting Clip	K003 and On	12

Figure 33-20.3: Accent Lights

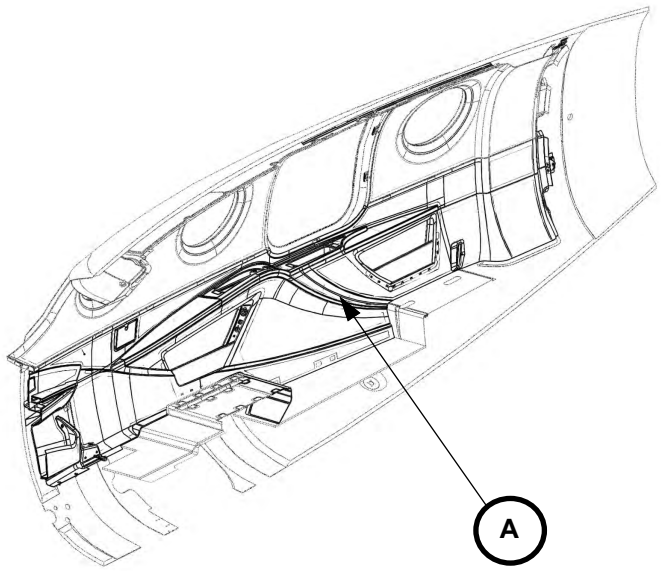

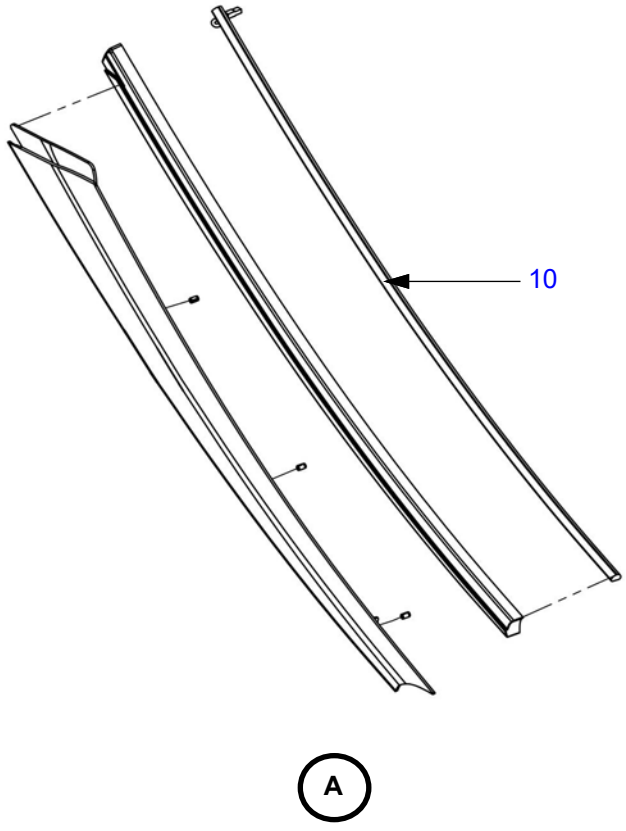

Table 33-20.3: Accent Lights

Figure Item Number	Part Number	Part Name	Effectivity Code	Amount in Assy.
10	PK99008173	Light, Led, 29"	K003 and On	1

EXTERIOR LIGHTING

Figure 33-40.1: Position and Strobe Lights

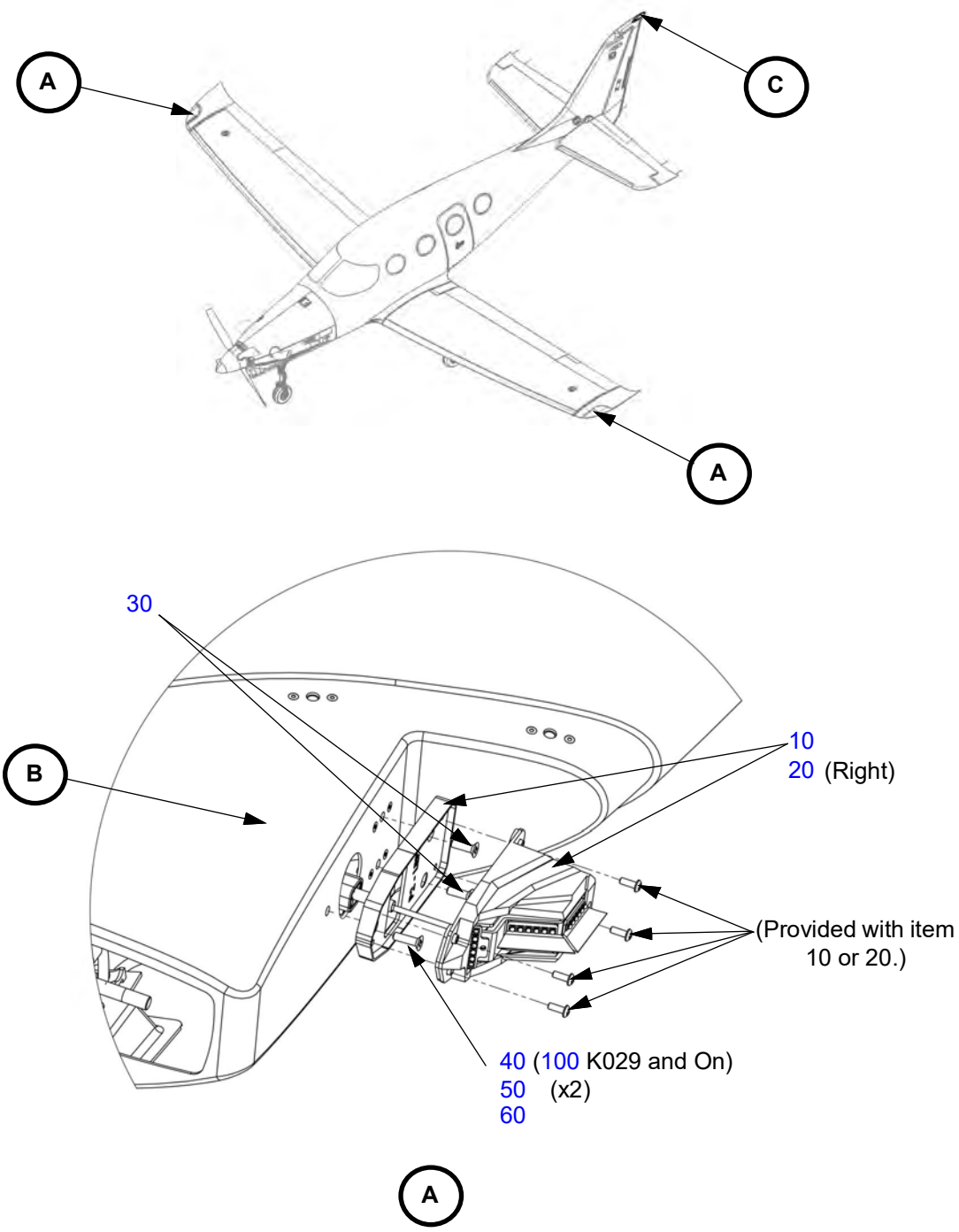

(Left side shown, right side the same except where noted.)

Figure 33-40.1: Position and Strobe Lights (Continued)

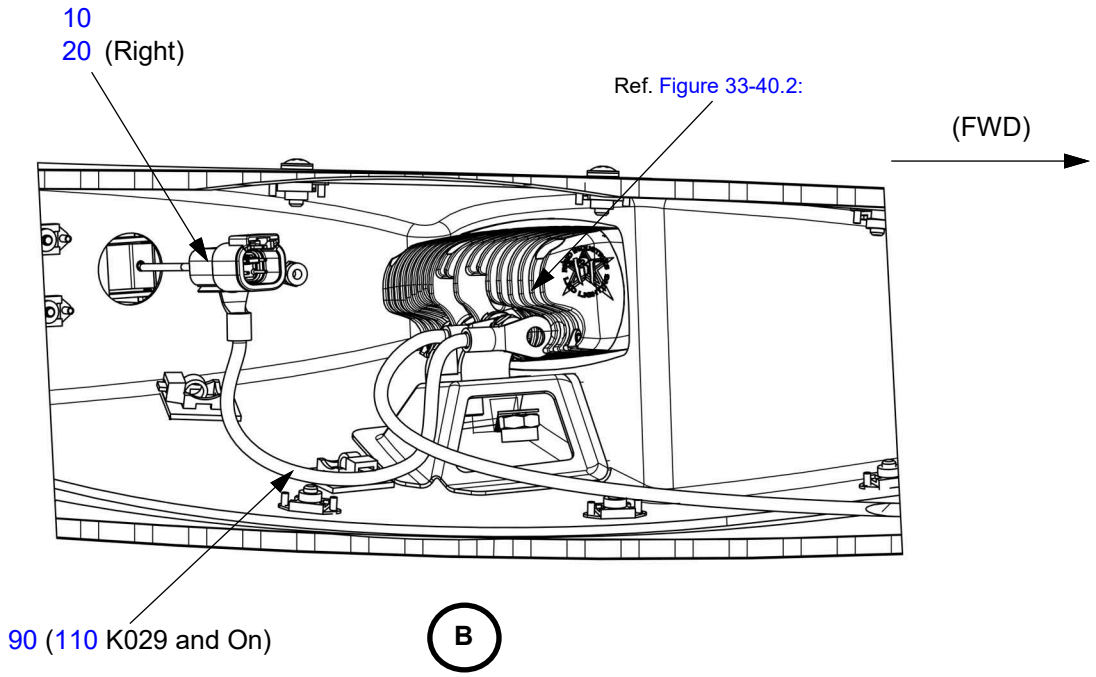

(Left side shown, right side opposite.)

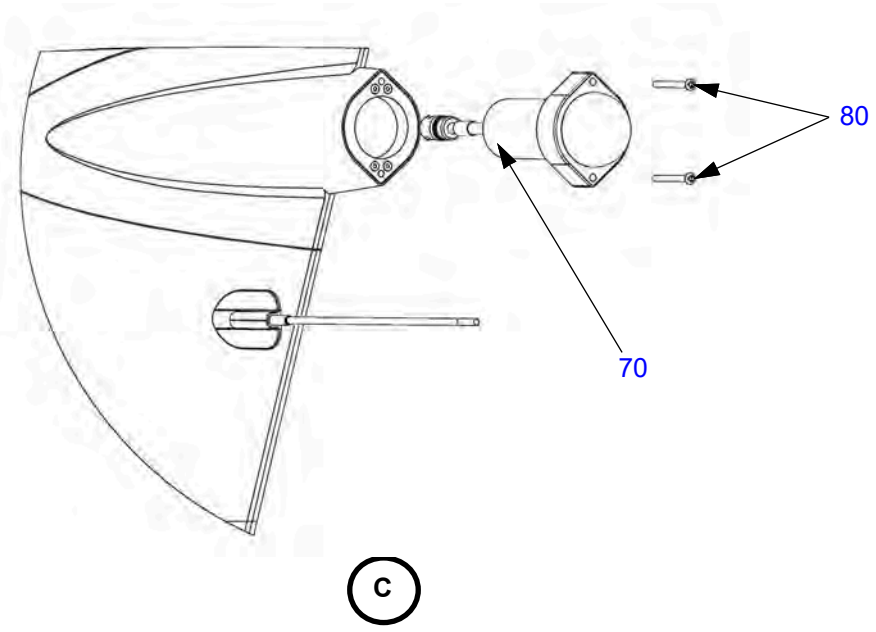

Table 33-40.1: Position and Strobe Lights

Figure Item Number	Part Number	Part Name	Effectivity Code	Amount in Assy.
10	AK57301401	Light, Anti-collision, With Connector, Left	K003 and On	1
20	AK57301402	Light, Anti-collision, With Connector, Right	K003 and On	1
30	MS24693-C27	Screw, Machine, C'sunk, CRES Ø .138 x 0.437	K003 and On	4
40	MS24693-C28	Screw, Machine, C'sunk, CRES Ø .138 x 0.500	K003 - K028	2
50	NAS1149FN516P	Washer, Flat #5 x .016	K003 and On	4
60	MS21044N06	Nut, Self-locking, Steel .138-32	K003 and On	2
70	AK55406000	Tail, Position Anti-collision Light, Connector	K003 and On	1
80	MS51957-22	Screw, Pan Head, .112 x .1.25 Lg., CRES	K003 and On	2
90	AK13005732	Ground Strap, Jumper, Anti-collision Light	K003 - K028	2
100	MS24693-C29	Screw, Machine, C'sunk, CRES Ø .138 x 0.625	K029 and On	2
110	AK13005731	Ground Strap, Anti-collision Light, Wing Tip	K029 and On	2

Figure 33-40.2: Landing and Taxi Lights (K003 - K028)

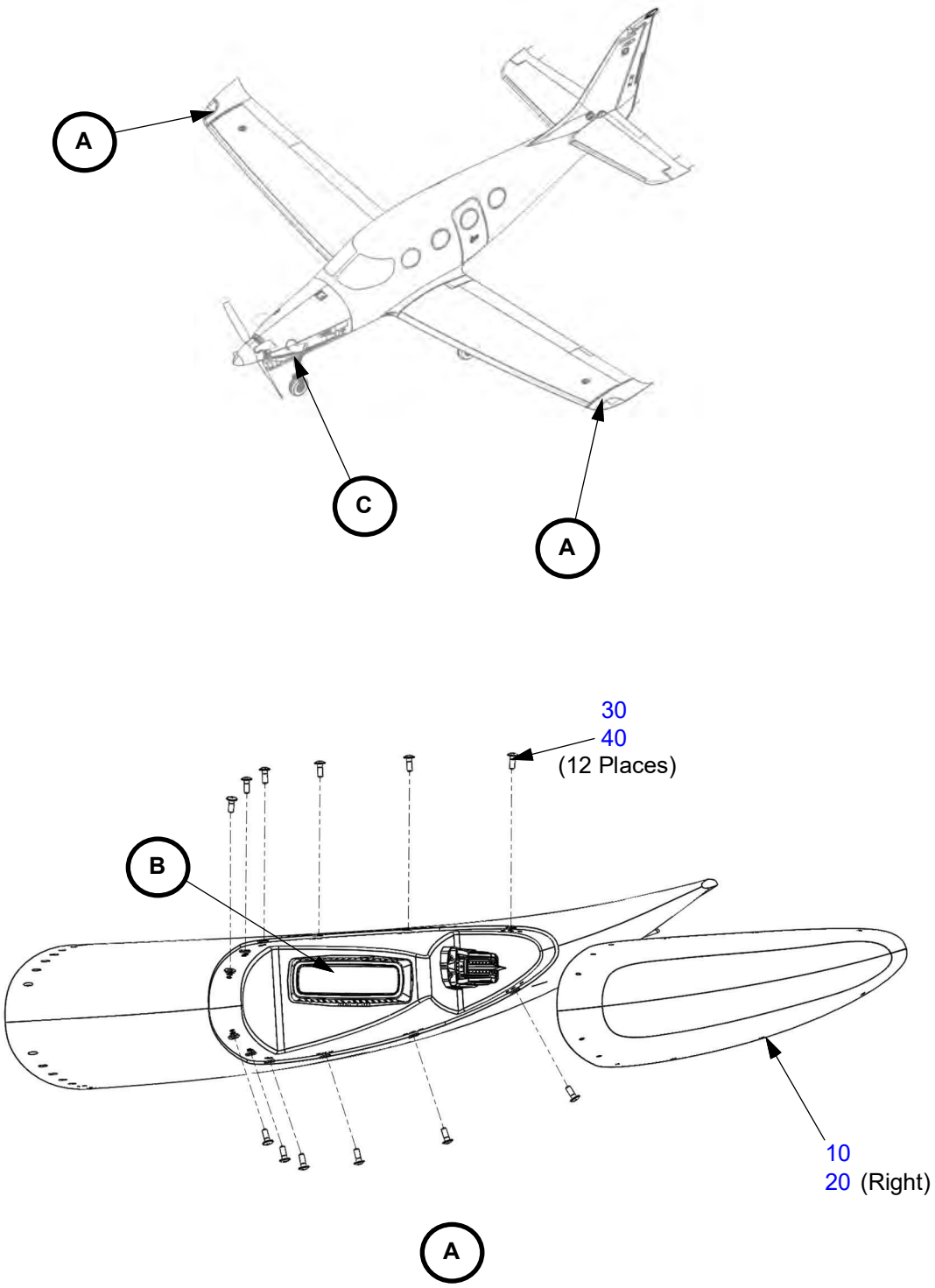

(Left side shown, right side the opposite except where noted.)

Figure 33-40.2: Landing and Taxi Lights (K003 - K028) (Continued)

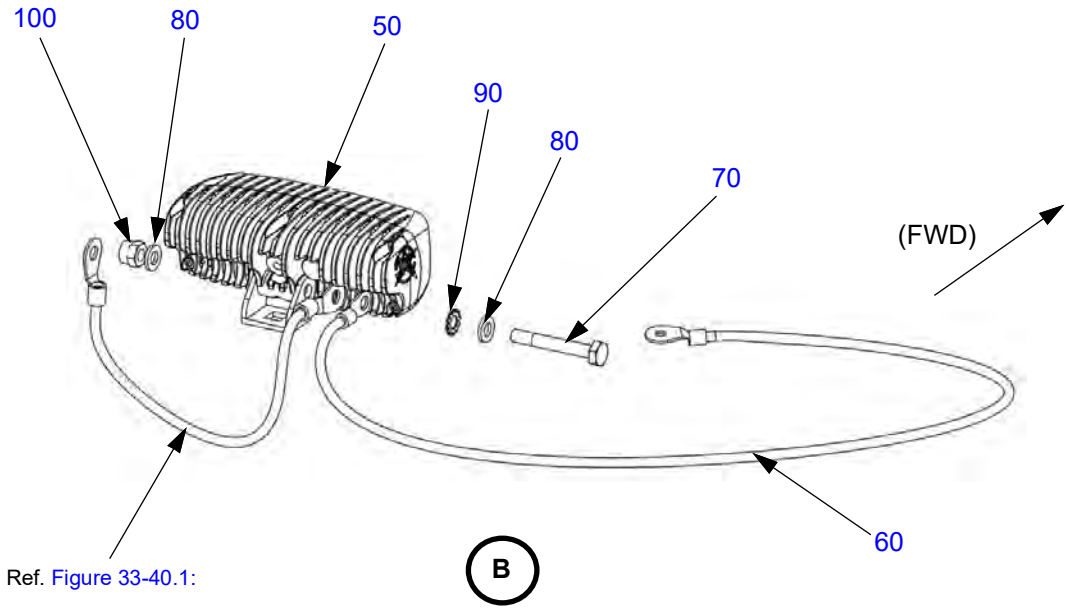

(Left side shown, right side opposite.)

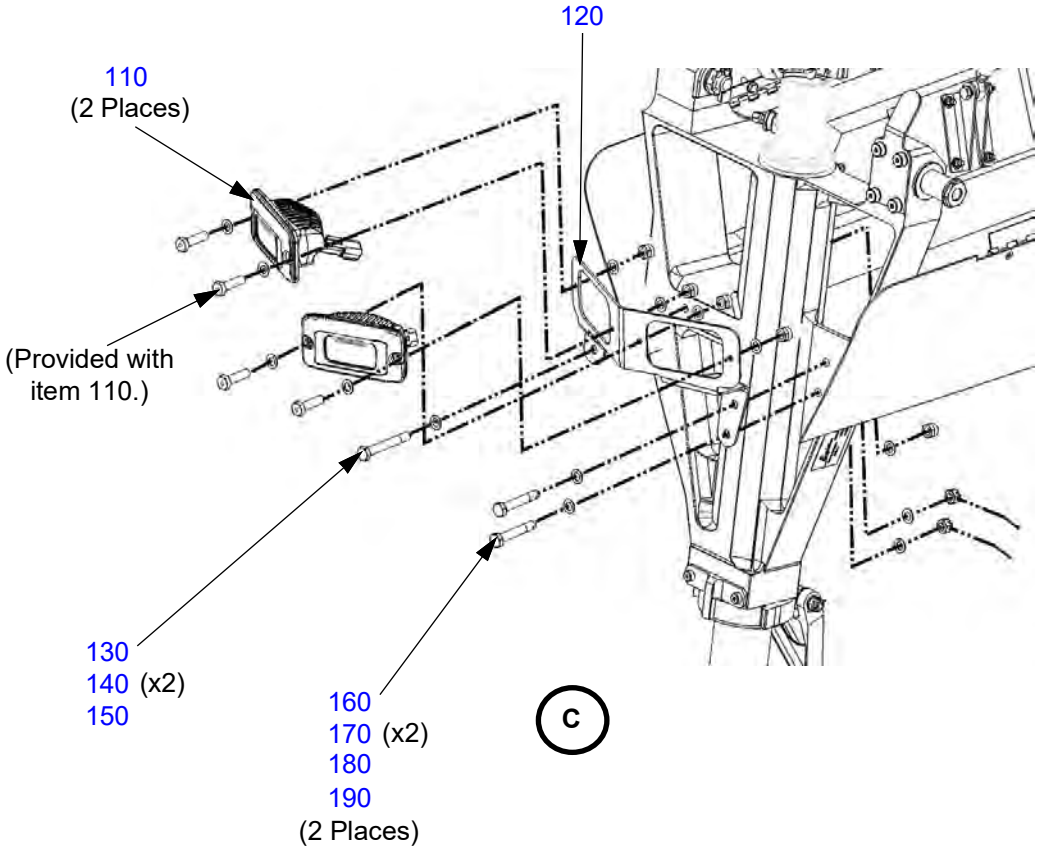

Table 33-40.2: Landing and Taxi Lights (K003 - K028)

Figure Item Number	Part Number	Part Name	Effectivity Code	Amount in Assy.
10	PK57301102	Lens, Landing Light, Left	K003 - K028	1
20	PK57302202	Lens, Landing Light, Right	K003 - K028	1
30	AN525-10R9	Screw, Washer Head, .190 x .563 Lg.	K003 - K028	24
40	MS51859-05	Washer, Flat-plastic (Nylon)	K003 - K028	24
50	PK99004002	Landing Light, Wing Tip	K003 - K028	2
60	AK13005731	Ground Strap, Landing Light	K003 - K028	2
70	AN4-16A	Bolt, 1/4-28 x 1-25/32" Undrilled	K003 - K028	2
80	NAS1149F0463P	Washer, Flat 1/4 x .063	K003 - K028	4
90	MS35335-33	Washer, Lock, Flat-external Tooth, Ø.250	K003 - K028	2
100	MS21044N4	Nut, Self-locking, Steel 1/4-28	K003 - K028	2
110	AK32204001	Taxi Light with Connector	K003 - K028	2
120	PK32200002	Taxi Light Bracket, NLG	K003 - K028	1
130	AN5-22A	Bolt, 5/16-24 x 2-11/32" Undrilled	K003 - K028	1
140	NAS1149F0516P	Washer, Flat 5/16 x .016	K003 - K028	2
150	MS21045L5	Nut, Self-locking, Steel 5/16-24	K003 - K028	1
160	AN5-17	Bolt, 5/16-24 x 1-31/32" Drilled Shank	K003 - K028	2
170	NAS1149F0532P	Washer, Flat 5/16 x .032	K003 - K028	4
180	AN310-5	Nut, Castellated, Steel 5/16-24	K003 - K028	2
190	MS24665-134	Pin, Cotter, Cad Steel Ø .062 x .75	K003 - K028	2

Figure 33-40.3: Landing and Taxi Lights (K029 and On)

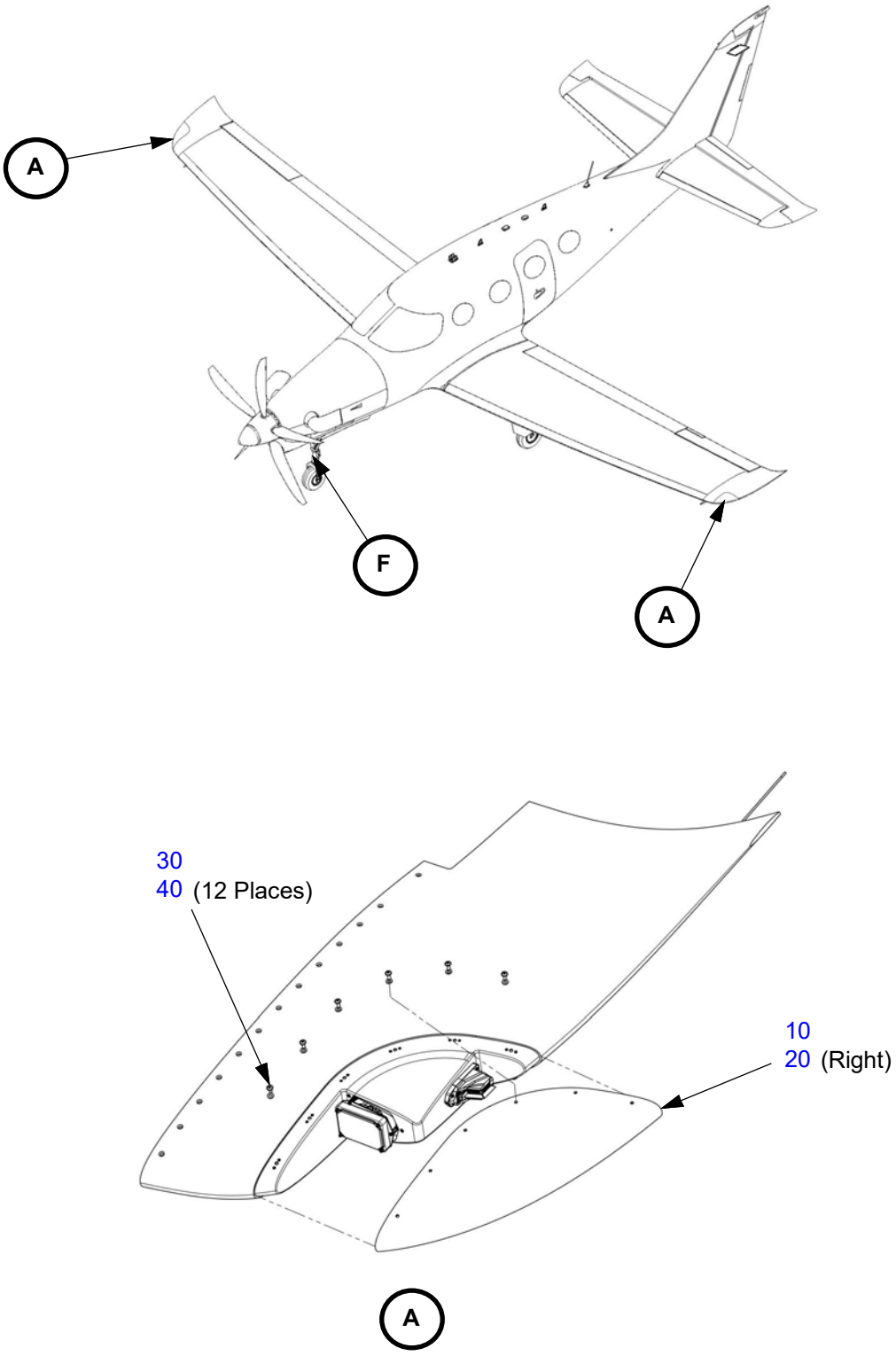

(Left side shown, right side the opposite except where noted.)

Figure 33-40.3: Landing and Taxi Lights (K029 and On) (Continued)

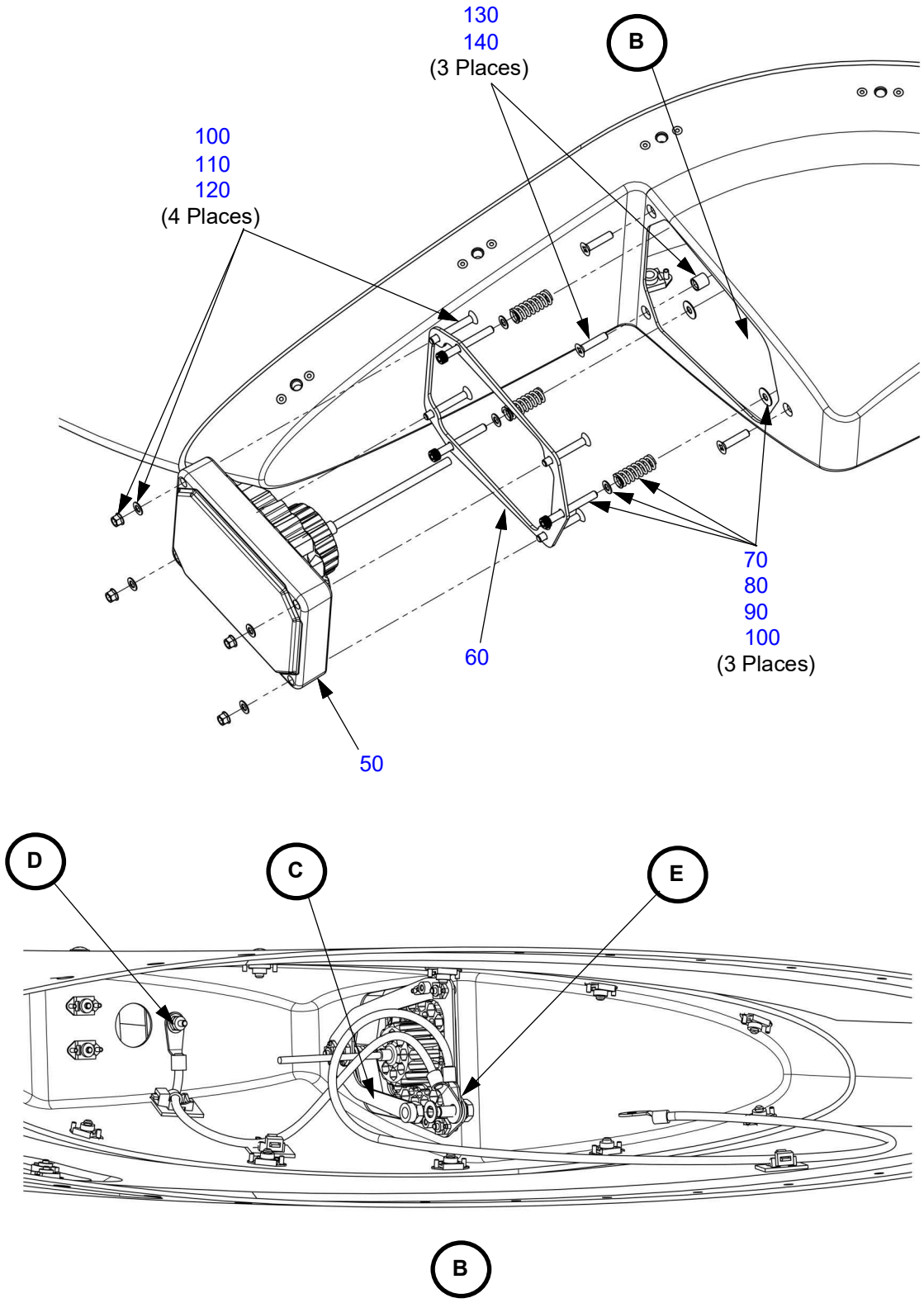

(Left side shown, right side the opposite except where noted.)

Figure 33-40.3: Landing and Taxi Lights (K029 and On) (Continued)

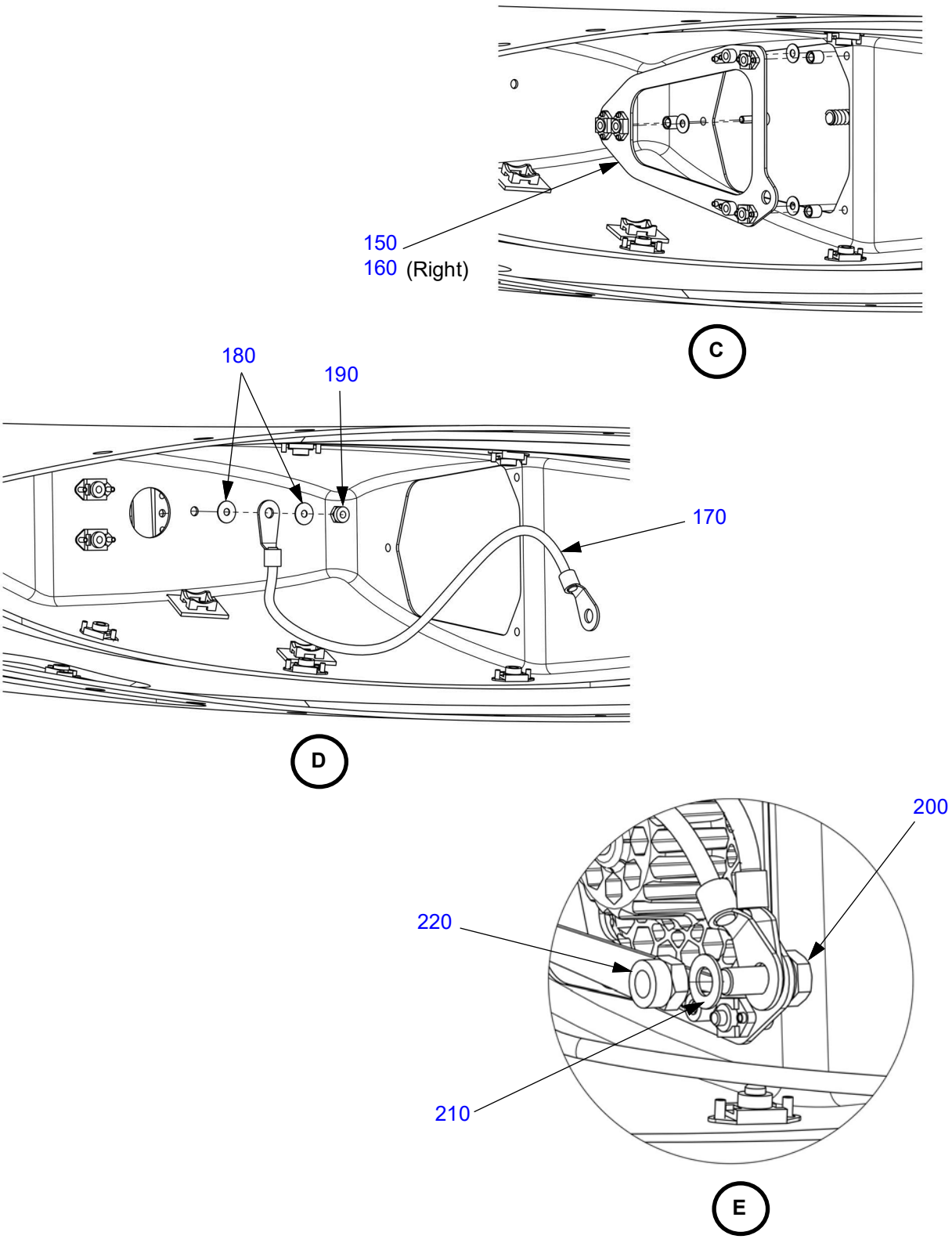

(Left side shown, right side the opposite except where noted.)

Figure 33-40.3: Landing and Taxi Lights (K029 and On) (Continued)

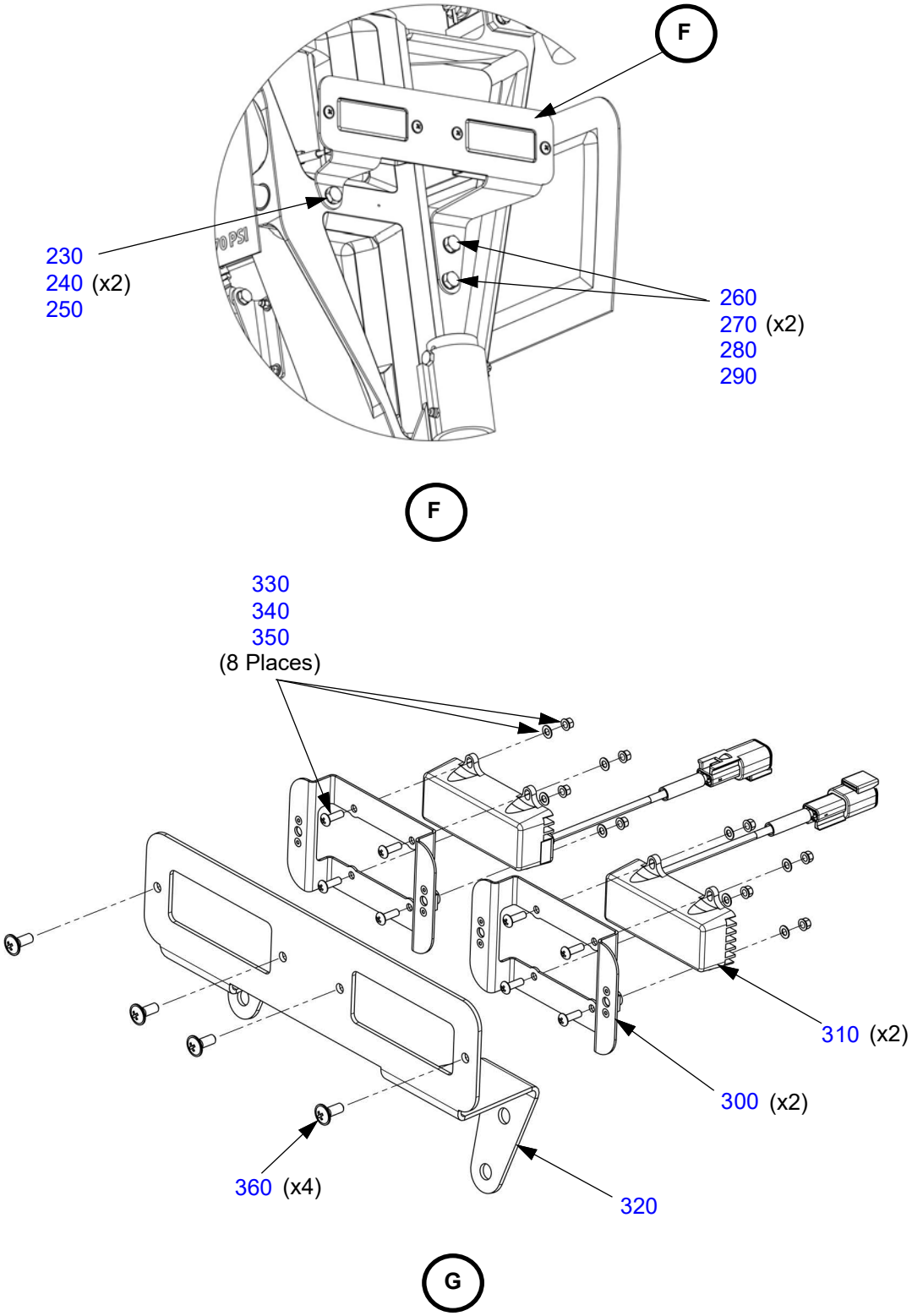

Table 33-40.3: Landing and Taxi Lights (K029 and On)

Figure Item Number	Part Number	Part Name	Effectivity Code	Amount in Assy.
10	PK57301102	Lens, Landing Light, Left	K029 and On	1
20	PK57302202	Lens, Landing Light, Right	K029 and On	1
30	AN525-10R9	Screw, Washer Head, .190 x .563 Lg.	K029 and On	24
40	MS51859-05	Washer, Flat-plastic (Nylon)	K029 and On	24
50	AK57302403	Landing Light, Led, Wing Tip	K029 and On	2
60	PK57302207	Tripod Plate, Landing Light	K029 and On	2
70	PK99006030	Spring, Compression, .300 Dia. x .813 Long	K029 and On	6
80	91251A999	McMaster-Carr Screw, Socket Head, 6-32 UNC x 1.125 Lg, Alloy Steel, Black Oxide Finish	K029 and On	6
90	NAS1149FN616P	Washer, Flat #6 x .016	K029 and On	6
100	NAS620C6	Washer, Reduced O.D., Cres, .143 I.D. x .267 O.D.	K029 and On	10
110	MS24693-S32	Screw, Machine, C'sunk Ø .138 x 1.000	K029 and On	4
120	MS21042L06	Nut, Self-locking, 450°, Reduced #6-32	K029 and On	4
130	MS24693-S29	Screw, Machine, C'sunk Ø .138 x 0.625	K029 and On	6
140	PK57302209	Spacer, Mounting Plate, Landing Light	K029 and On	6
150	AK57301107	Mounting Plate Assy, Landing Light, Left	K029 and On	1
160	AK57302208	Mounting Plate Assy, Landing Light, Right	K029 and On	1
170	AK13005733	Ground Strap, Landing Light	K029 and On	2
180	NAS1149FN516P	Washer, Flat #5 x .016	K029 and On	4
190	MS21044N06	Nut, Self-locking, Steel .138-32	K029 and On	2
200	AN4-5A	Bolt, 1/4-28 x 21/32" Undrilled	K029 and On	2
210	NAS1149F0432P	Washer, Flat 1/4 x .032	K029 and On	4
220	MS21044N4	Nut, Self-locking, Steel 1/4-28	K029 and On	2
230	AN5-22A	Bolt, 5/16-24 x 2-11/32" Undrilled	K029 and On	1

Figure Item Number	Part Number	Part Name	Effectivity Code	Amount in Assy.
240	NAS1149F0516P	Washer, Flat 5/16 x .016	K029 and On	2
250	MS21045L5	Nut, Self-locking, Steel 5/16-24	K029 and On	1
260	AN5-17	Bolt, 5/16-24 x 1-31/32" Drilled Shank	K029 and On	2
270	NAS1149F0532P	Washer, Flat 5/16 x .032	K029 and On	4
280	AN310-5	Nut, Castellated, Steel 5/16-24	K029 and On	2
290	MS24665-134	Pin, Cotter, Cad Steel Ø .062 x .75	K029 and On	2
300	AK32208008	Mounting Bracket Assembly, Taxi Light	K029 and On	2
310	AK32204004	Taxi Light And Connector Assy.	K029 and On	2
320	PK32208010	Taxi Light Bracket, NLG	K029 and On	1
330	NAS601-7P	Screw, Machine, Pan Head, .138-32 x .438 Lg.	K029 and On	
340	NAS620C6	Washer, Reduced O.D., Cres, .143 I.D x .267 O.D.	K029 and On	
350	MS21042L06	Nut, Self-locking, 450°, Reduced #6-32	K029 and On	
360	AN525-10R8	Screw, Washer Head, .190 x .500 Lg.	K029 and On	

Figure 33-40.4: Ice Light

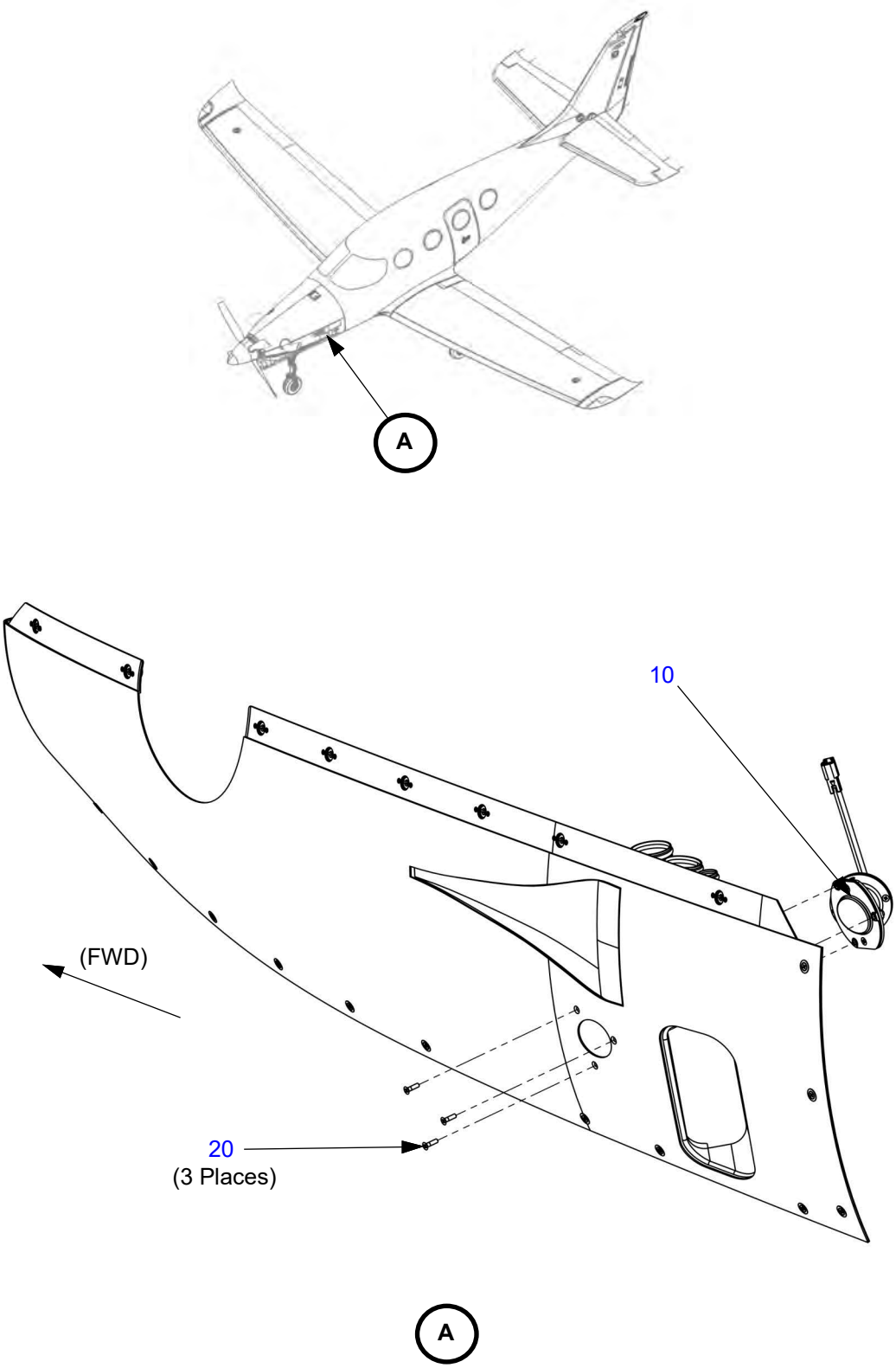

Table 33-40.4: Ice Light

Figure Item Number	Part Number	Part Name	Effectivity Code	Amount in Assy.
10	AK33400001	Ice Light Assembly	K003 and On	1
20	MS24694-C53	Screw, Machine, C'sunk, CRES Ø .190 x 23/32	K003 and On	3

CHAPTER
34

Navigation

This Page Intentionally Left Blank

Table of Contents
and
List of Effective Pages

Chapter/Section	Page Number	Effective Date
34-Title	Page 1	03 Apr 2020
34-Title	Page 2	03 Apr 2020
34-LOEP	Page 1	26 Mar 2024
34-LOEP	Page 2	26 Mar 2024
34-TOC	Page 1	13 Jan 2023
34-TOC	Page 2	03 Apr 2020
Flight Environment Data		
34-10	Page 1	03 Apr 2020
34-10	Page 2	03 Apr 2020
34-10	Page 3	03 Apr 2020
34-10	Page 4	03 Apr 2020
34-10	Page 5	03 Apr 2020
34-10	Page 6	03 Apr 2020
34-10	Page 7	03 Apr 2020
34-10	Page 8	03 Apr 2020
34-10	Page 9	03 Apr 2020
34-10	Page 10	03 Apr 2020
Attitude and Direction		
34-20	Page 1	14 Jul 2021
34-20	Page 2	14 Jul 2021
34-20	Page 3	03 Apr 2020
34-20	Page 4	14 Jul 2021
34-20	Page 5	14 Jul 2021
34-20	Page 6	14 Jul 2021
34-20	Page 7	14 Jul 2021
34-20	Page 8	14 Jul 2021
34-20	Page 9	26 Mar 2024
34-20	Page 10	26 Mar 2024
34-20	Page 11	26 Mar 2024
34-20	Page 12	26 Mar 2024
Independent Position Determining		
34-40	Page 1	03 Apr 2020
34-40	Page 2	03 Apr 2020
34-40	Page 3	03 Apr 2020
34-40	Page 4	03 Apr 2020

34-40 ..... Page 5 ..... 03 Apr 2020
34-40 ..... Page 6 ..... 03 Apr 2020
34-40 ..... Page 7 ..... 03 Apr 2020
34-40 ..... Page 8 ..... 03 Apr 2020
34-40 ..... Page 9 ..... 03 Apr 2020
34-40 ..... Page 10 ..... 13 Jan 2023
34-40 ..... Page 11 ..... 13 Jan 2023
34-40 ..... Page 12 ..... 13 Jan 2023
34-40 ..... Page 13 ..... 13 Jan 2023
34-40 ..... Page 14 ..... 13 Jan 2023
34-40 ..... Page 15 ..... 13 Jan 2023
34-40 ..... Page 16 ..... 13 Jan 2023

Dependent Position Determining
34-50 ..... Page 1 ..... 03 Apr 2020
34-50 ..... Page 2 ..... 26 Mar 2024

CHAPTER 34

Table of Contents

List of Effective Pages ..... 34-LOEP / Page 1
Table of Contents ..... 34-TOC / Page1

Paragraph **Page Number**

Flight Environment Data
Figure 34-10.1: Pitot Static System ..... 34-10 / Page 1
Table 34-10.1: Pitot Static System ..... 34-10 / Page 7
Figure 34-10.2: OAT Probe ..... 34-10 / Page 9
Table 34-10.2: OAT Probe ..... 34-10 / Page 10

Attitude and Direction
Figure 34-20.1: Transponders ..... 34-20 / Page 1
Table 34-20.1: Transponders ..... 34-20 / Page 2
Figure 34-20.2: Magnetometers ..... 34-20 / Page 3
Table 34-20.2: Magnetometers ..... 34-20 / Page 5
Figure 34-20.3: Air Data Attitude Heading Reference System (ADAHRS) ..... 34-20 / Page 6
Table 34-20.3: Air Data Attitude Heading Reference System (ADAHRS) ..... 34-20 / Page 7
Figure 34-20.4: L3 ESI-500 Electronic Standby Instrument System ..... 34-20 / Page 8
Table 34-20.4: L3 ESI-500 Electronic Standby Instrument System ..... 34-20 / Page 9
Figure 34-20.1: Garmin GI-275 Electronic Flight Display ..... 34-20 / Page 10
Table 34-20.1: Garmin GI-275 Electronic Flight Display ..... 34-20 / Page 11

Independent Position Determining
Figure 34-40.1: Primary Flight Displays ..... 34-40 / Page 1
Table 34-40.1: Primary Flight Displays ..... 34-40 / Page 3
Figure 34-40.2: Multi-Function Display ..... 34-40 / Page 4
Table 34-40.2: Multi-Function Display ..... 34-40 / Page 5
Figure 34-40.3: TAS Processor ..... 34-40 / Page 6
Table 34-40.3: TAS Processor ..... 34-40 / Page 7
Figure 34-40.4: Navigation Antennas ..... 34-40 / Page 8
Table 34-40.4: Navigation Antennas ..... 34-40 / Page 12
Figure 34-40.5: Cooling Fans ..... 34-40 / Page 14
Table 34-40.5: Cooling Fans ..... 34-40 / Page 15

Dependent Position Determining
Figure 34-50.1: Avionics System Interface ..... 34-50 / Page 1
Table 34-50.1: Avionics System Interface ..... 34-50 / Page 2

This Page Intentionally Left Blank

FLIGHT ENVIRONMENT DATA

Figure 34-10.1: Pitot Static System

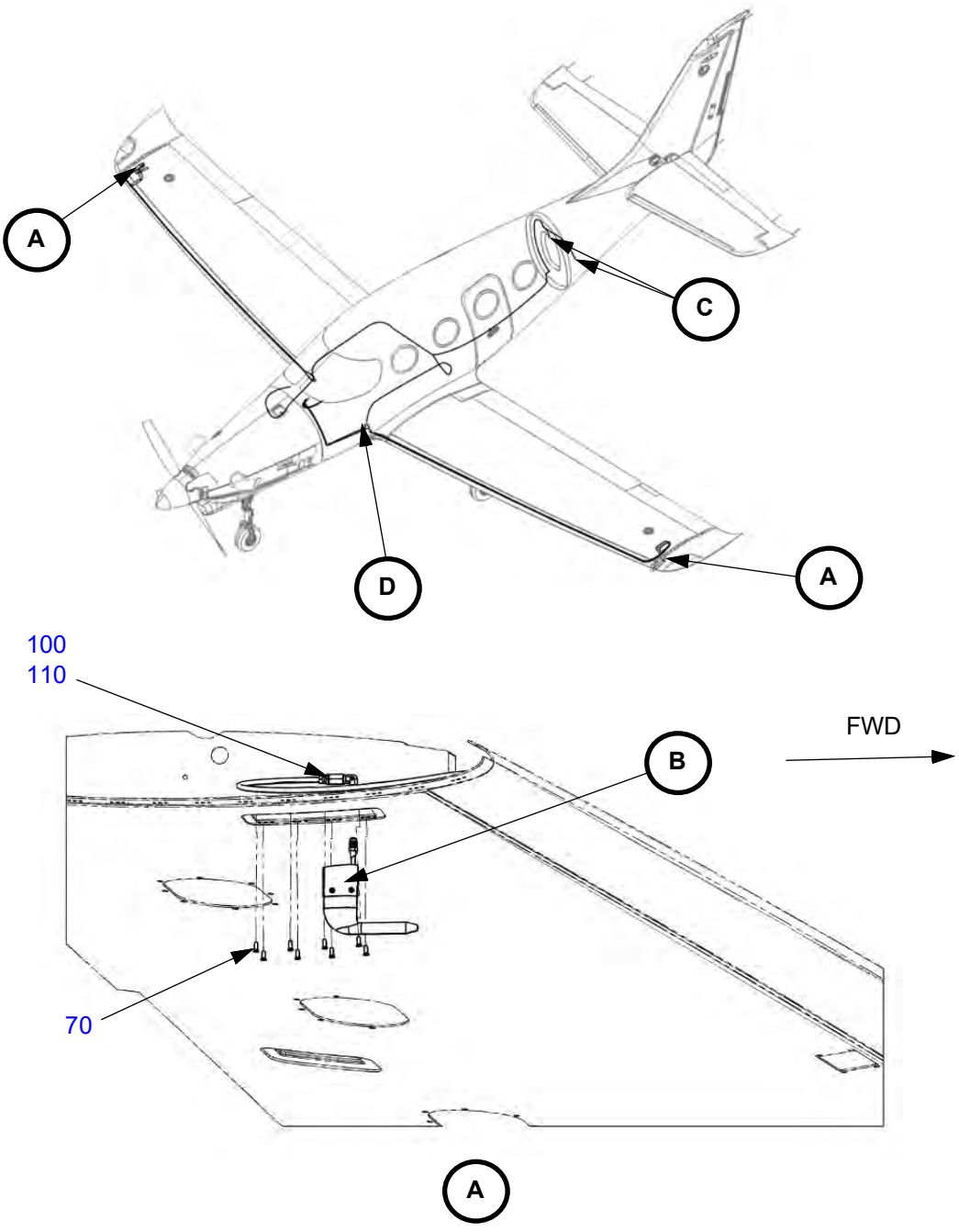

(Right side shown, left side opposite.)

Figure 34-10.1: Pitot Static System (Continued)

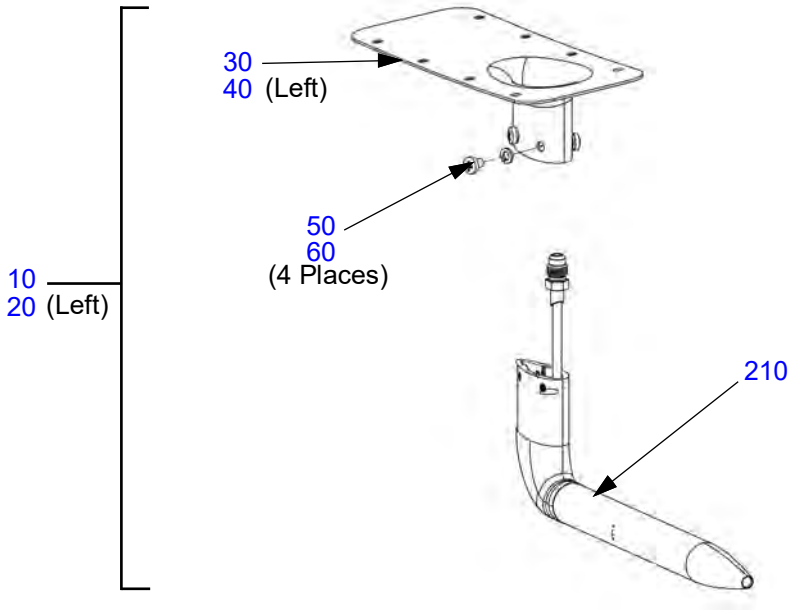

B

(Right side shown, left side opposite.)

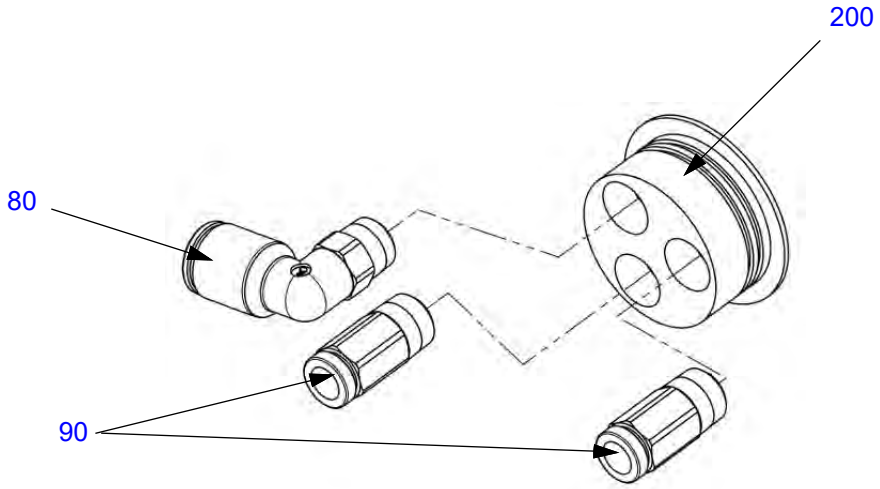

C

Figure 34-10.1: Pitot Static System (Continued)

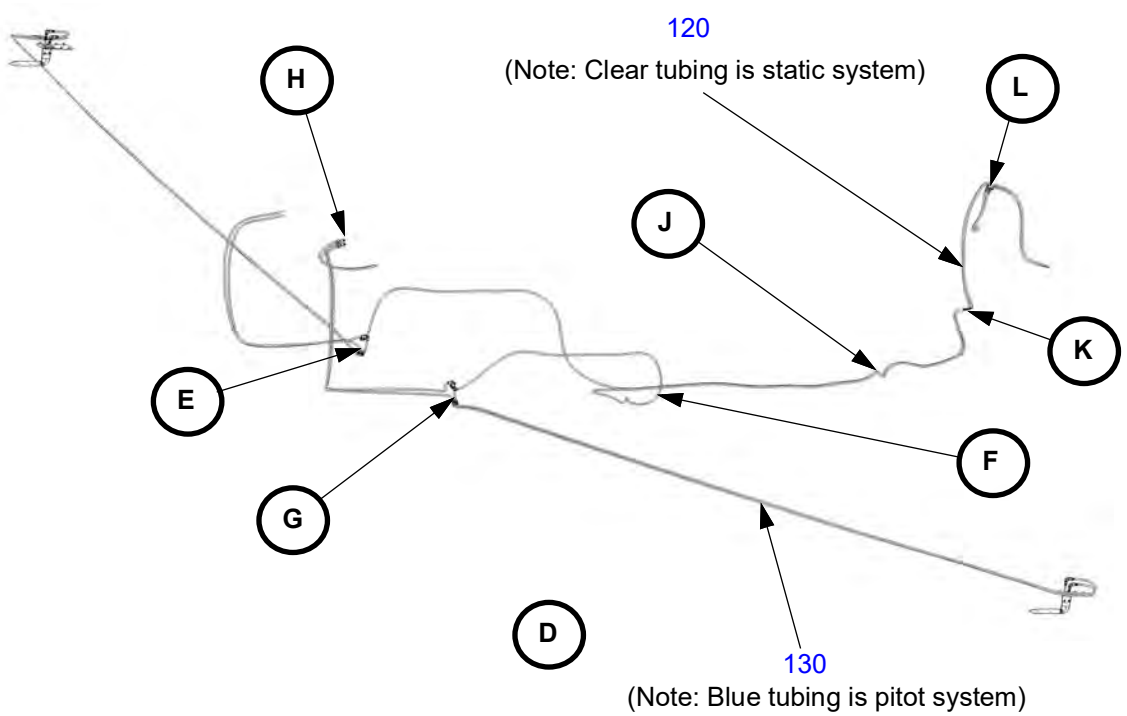

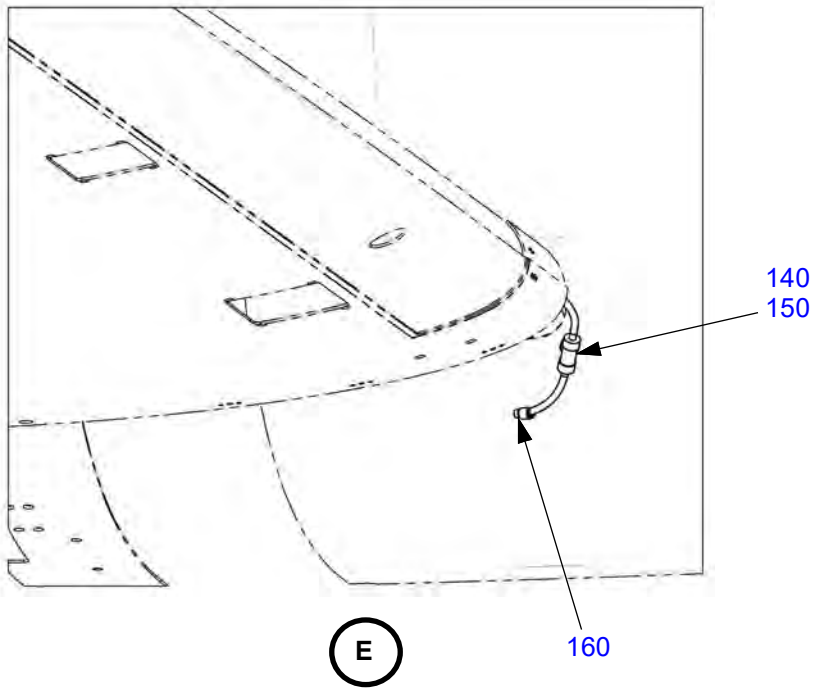

Figure 34-10.1: Pitot Static System (Continued)

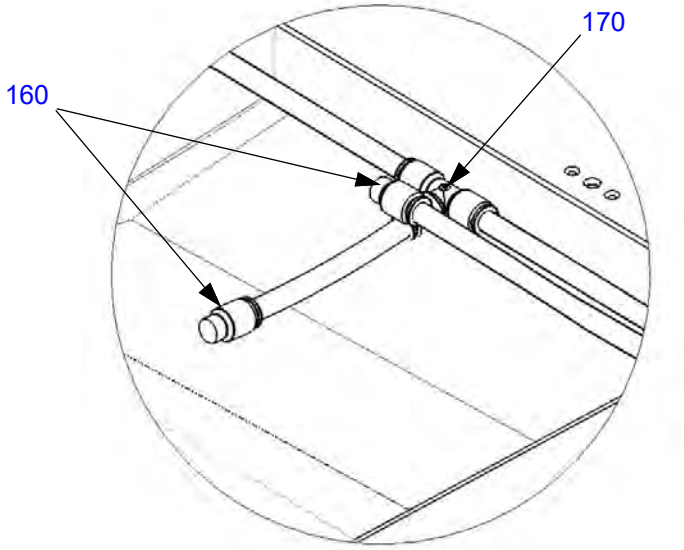

F

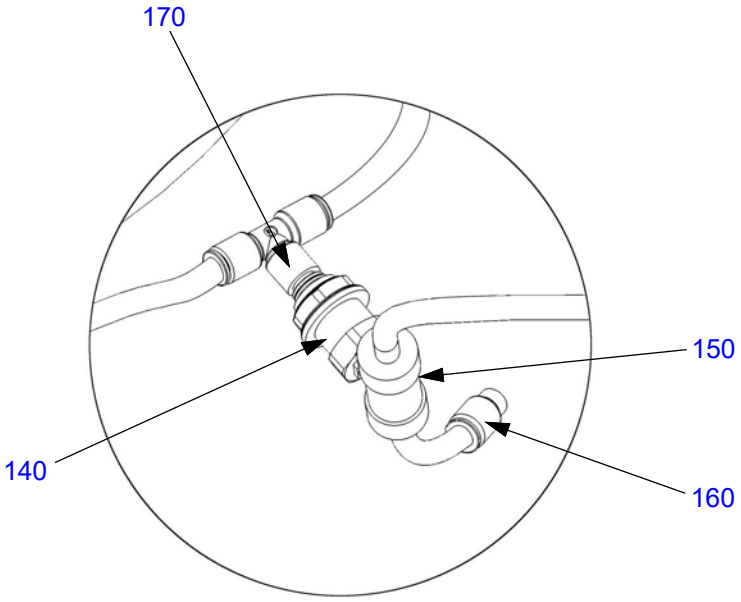

G

Figure 34-10.1: Pitot Static System (Continued)

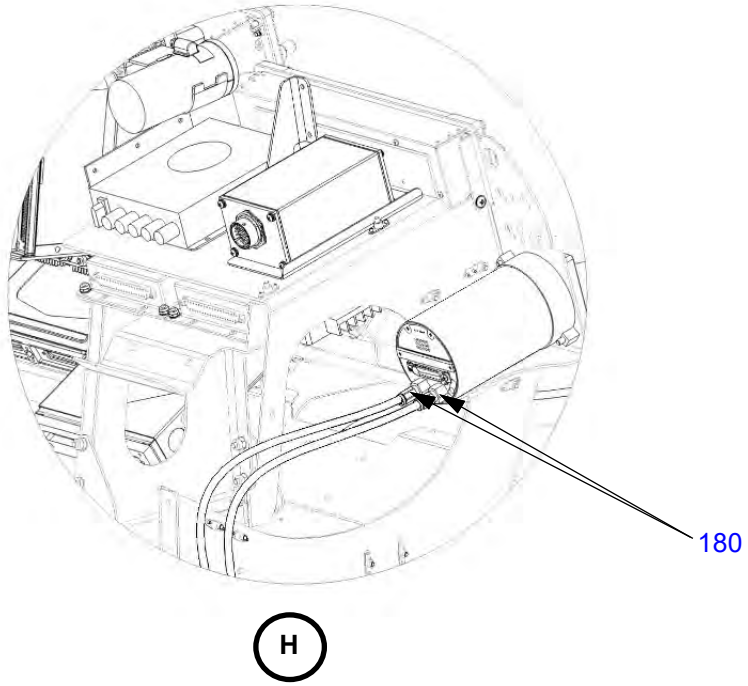

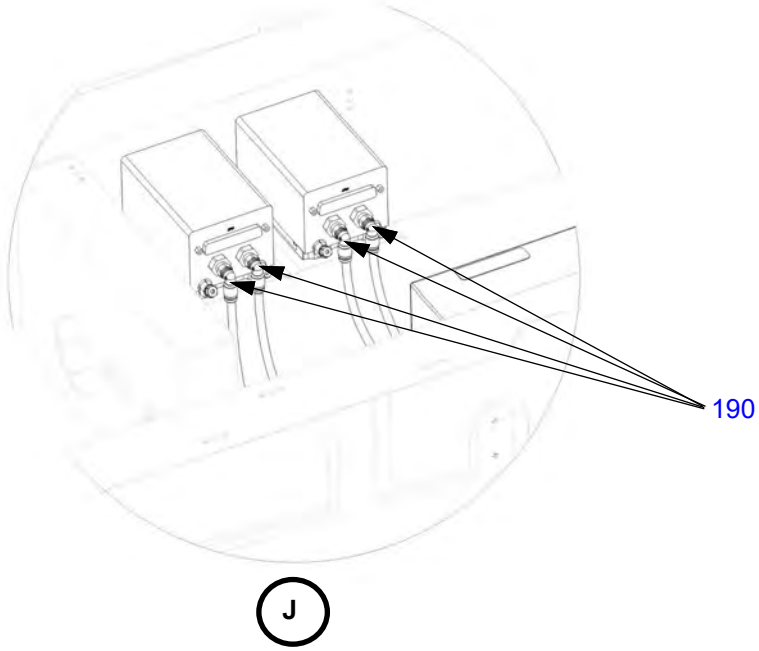

Figure 34-10.1: Pitot Static System (Continued)

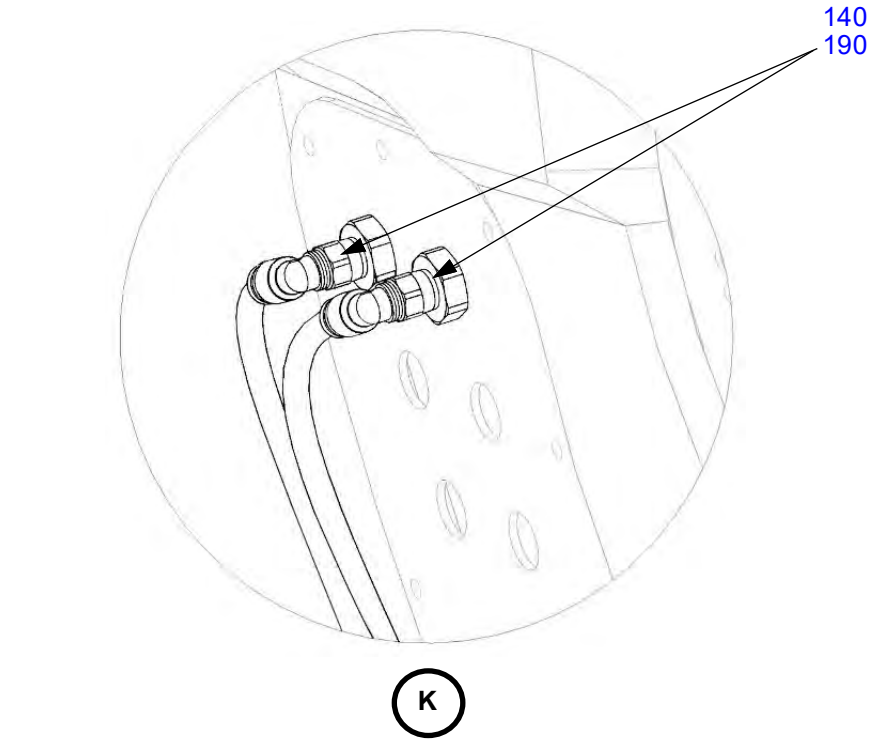

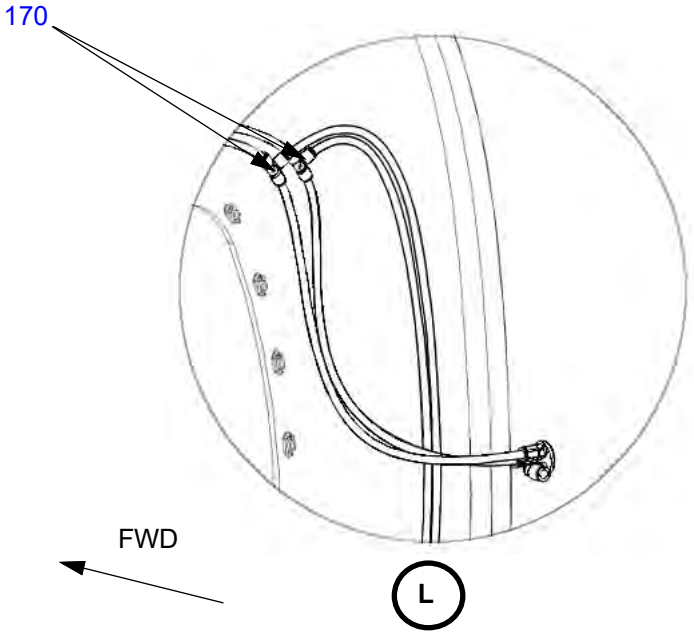

Table 34-10.1: Pitot Static System

Figure Item Number	Part Number	Part Name	Effectivity Code	Amount in Assy.
10	AK30302001	Assembly, Pitot Tube, Left	K003 and On	1
20	AK30302002	Assembly, Pitot Tube, Right	K003 and On	1
30	AK57106003	Assy, Welded, Access Panel, Pitot Probe, Left	K003 and On	1
40	AK57106004	Assy, Welded, Access Panel, Pitot Probe, Right	K003 and On	1
50	MS35207-226	Screw, Pan Head, Steel, Ø.138 x .250 Lg.	K003 and On	8
60	MS35338-41	Washer, Lock-spring, Ø.138	K003 and On	8
70	MS24694-S5	Screw, Machine, C'sunk Ø .164 x 17/32	K003 and On	16
80	PK99005106	Male Stud Elbow	K003 and On	2
90	3175 56 11	Male Stud Coupling, 1/4 x 1/8 NPT, Parker, Legris	K003 and On	4
100	4x6EF-SS	Triple-Lok, 90deg Elbow, 37deg Swivel x 1/8npt, Parker	K003 and On	2
110	66HD-4-2	1/4 Tube To 1/8 NPT Female Adapter, Parker	K003 and On	2
120	NN-4-040	Parker Flexible Nylon Tubing	K003 and On	A/R
130	N-4-040-BLU	Parker Flexible Nylon Tubing	K003 and On	A/R
140	3036 56 11	Female Bulkhead Connector, 1/4" x 1/8 NPT, Parker, Legris	K003 and On	2
150	3108 56 11	Legris: Male Branch Tee, 1/4" Tube x 1/8" NPT, Push Connect	K003 and On	3
160	3151 56 00	Female Plug, Instant Connection, 1/4"	K003 and On	5
170	3104 56 00	Tee, .25x.25, Parker, Legris	K003 and On	6
180	3175 56 11	Male Stud Coupling, 1/4 x 1/8 NPT, Parker, Legris	K003 and On	2
190	3109 56 11	Male Stud Elbow, 1/4" x 1/8 NPT, Parker, Legris	K003 and On	2

Figure Item Number	Part Number	Part Name	Effectivity Code	Amount in Assy.
200	PK30301001	Port, Static, Fuselage	K003 and On	2
210	PH502	Pitot Probe, Heated 24v, Aerosonic	K003 and On	2

Figure 34-10.2: OAT Probe

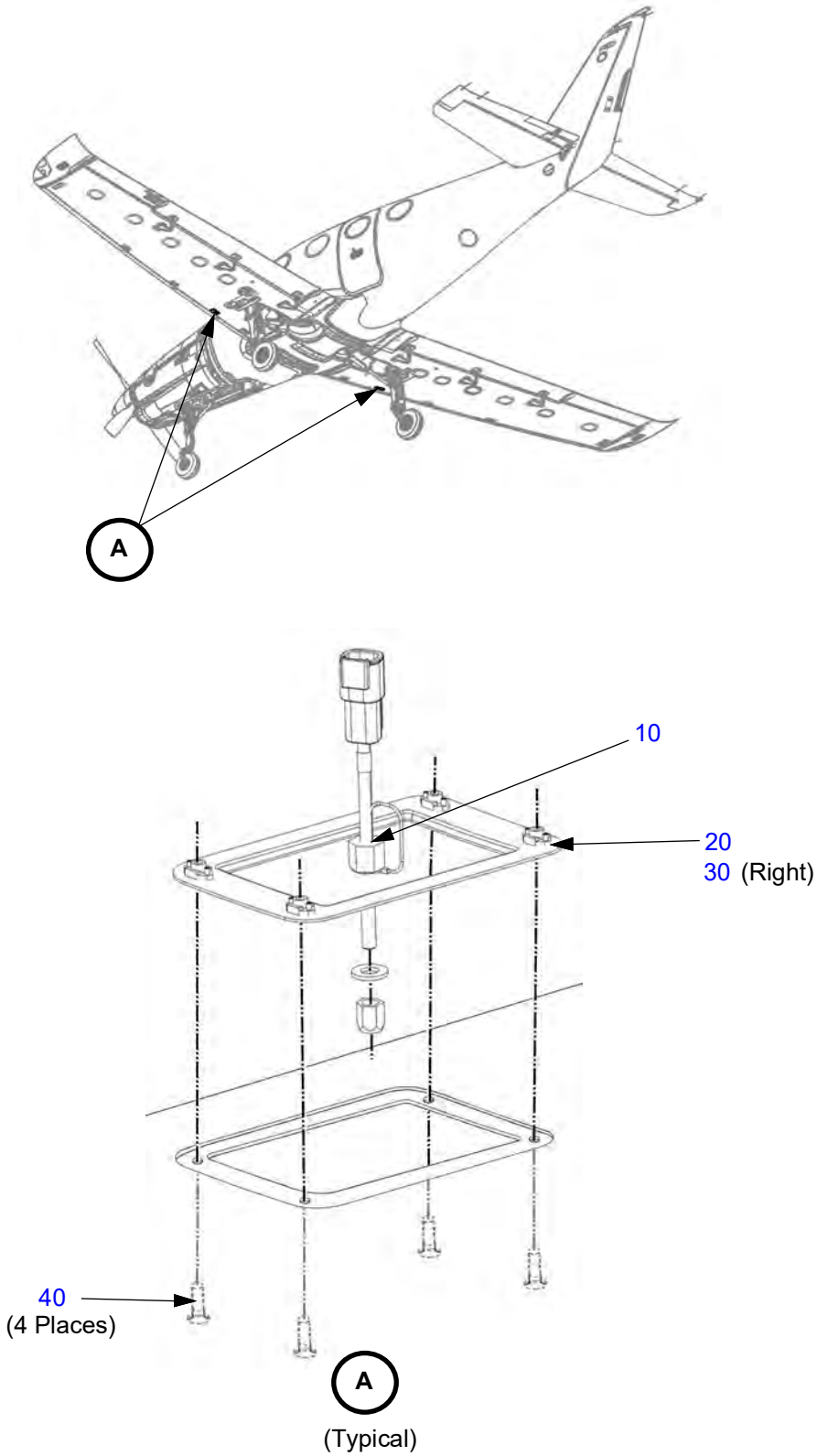

Table 34-10.2: OAT Probe

Figure Item Number	Part Number	Part Name	Effectivity Code	Amount in Assy.
10	AK57106011	Temp Probe With Connector	K003 and On	2
20	AK57402011	Assy, Access Panel, 2, Leading Edge, Oat Shield, Left	K003 and On	1
30	AK57402012	Assy, Access Panel, 2, Leading Edge, Oat Shield, Right	K003 and On	1
40	MS24694-S5	Screw, Machine, C'sunk Ø .164 x 17/32	K003 and On	8

ATTITUDE AND DIRECTION

Figure 34-20.1: Transponders

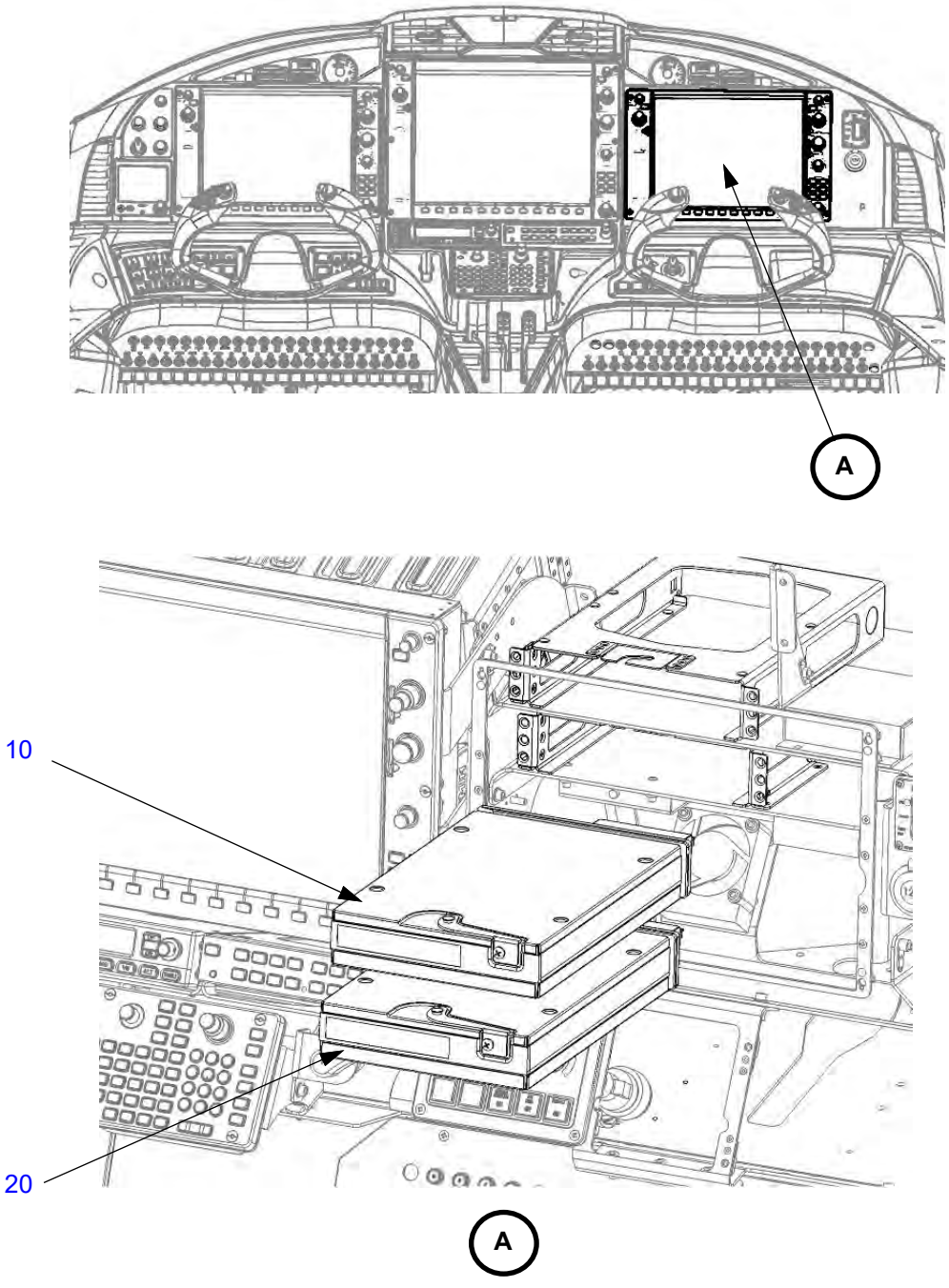

Table 34-20.1: Transponders

Figure Item Number	Part Number	Part Name	Effectivity Code	Amount in Assy.
10	011-00779-21	Transponder, GTX33D Mode S W/ES, Diversity	K003-K010	1
	011-04334-00	GTX345DR Transponder, Garmin	K011 and On*	1
20	011-00779-21	Transponder, GTX 33D Mode S W/ES, Diversity	K003-K010	1
	011-04332-00	GTX335DR Transponder, Garmin	K011 and On*	1

* (Also SN:K003-K010 with SB-0017)

Figure 34-20.2: Magnetometers

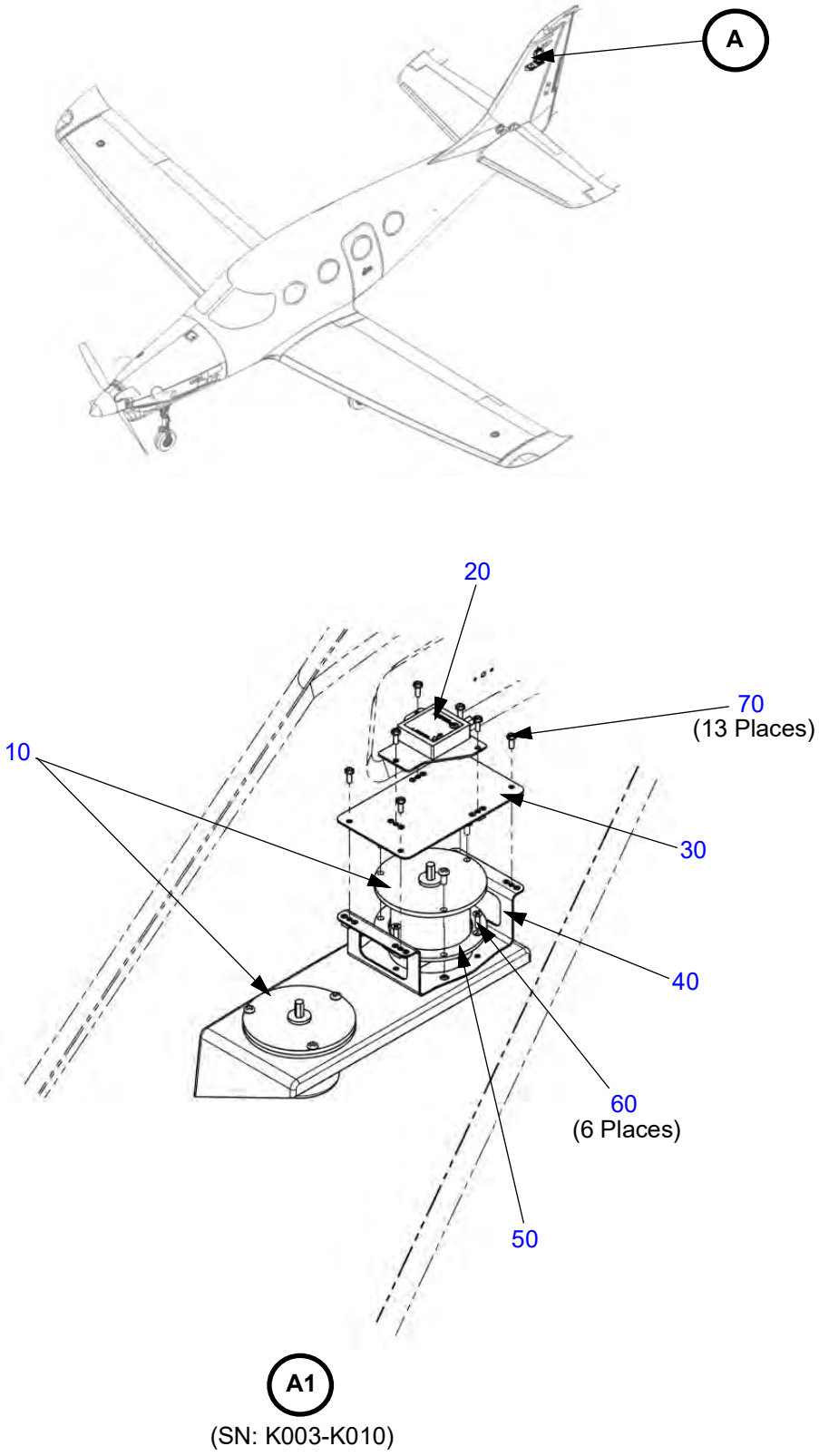

Table 34-20.2: Magnetometers (Continued)

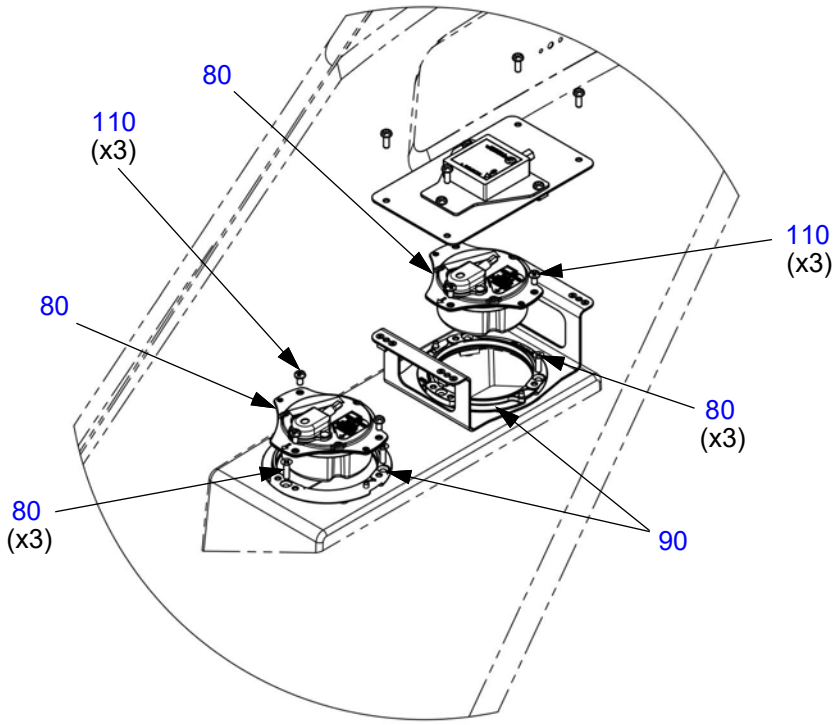

A2

(SN: K011 and On, and K003-K010 with SB-0017)

Table 34-20.2: Magnetometers

Figure Item Number	Part Number	Part Name	Effectivity Code	Amount in Assy.
10	011-00870-10	GMU 44 Magnetometer Kit (Parts: 115-00481-00, 011-00871-00)	K003-K010	2
20	9200-15500-0101	L-3 Avionics: Magnetometer, Mag-500	K003-K010	1
30	AK34202000	Bracket Assy, Magnetometer, Upper Plate	K003-K010	1
40	AK34201000	Bracket Assy, Magnetometer, Riser, Lower Mount	K003-K010	1
50	115-00481-00	GMU 44 Mounting Rack	K003-K010	2
60	MS24693-BB28	Screw, Machine, C'sunk, Brass, Ø .138 x 0.500	K003-K010	6
70	MS35214-25	Screw, Pan Head, Brass, Ø.138x .38 Lg	K003-K010	13
80	011-04201-00	GMU44B Magnetometer, Garmin	K011 and On*	2
90	125-00437-00	DCP, GMU44B Install Rack, Garmin	K011 and On*	2
100	MS24693-BB28	Screw, Machine, C'sunk, Brass, Ø .138 x 0.500	K011 and On*	6
110	MS35214-23	Screw, Pan Head, Brass, Ø.138 x .25 Lg	K011 and On*	6

* (Also SN:K003-K010 with SB-0017)

Figure 34-20.3: Air Data Attitude Heading Reference System (ADAHRS)

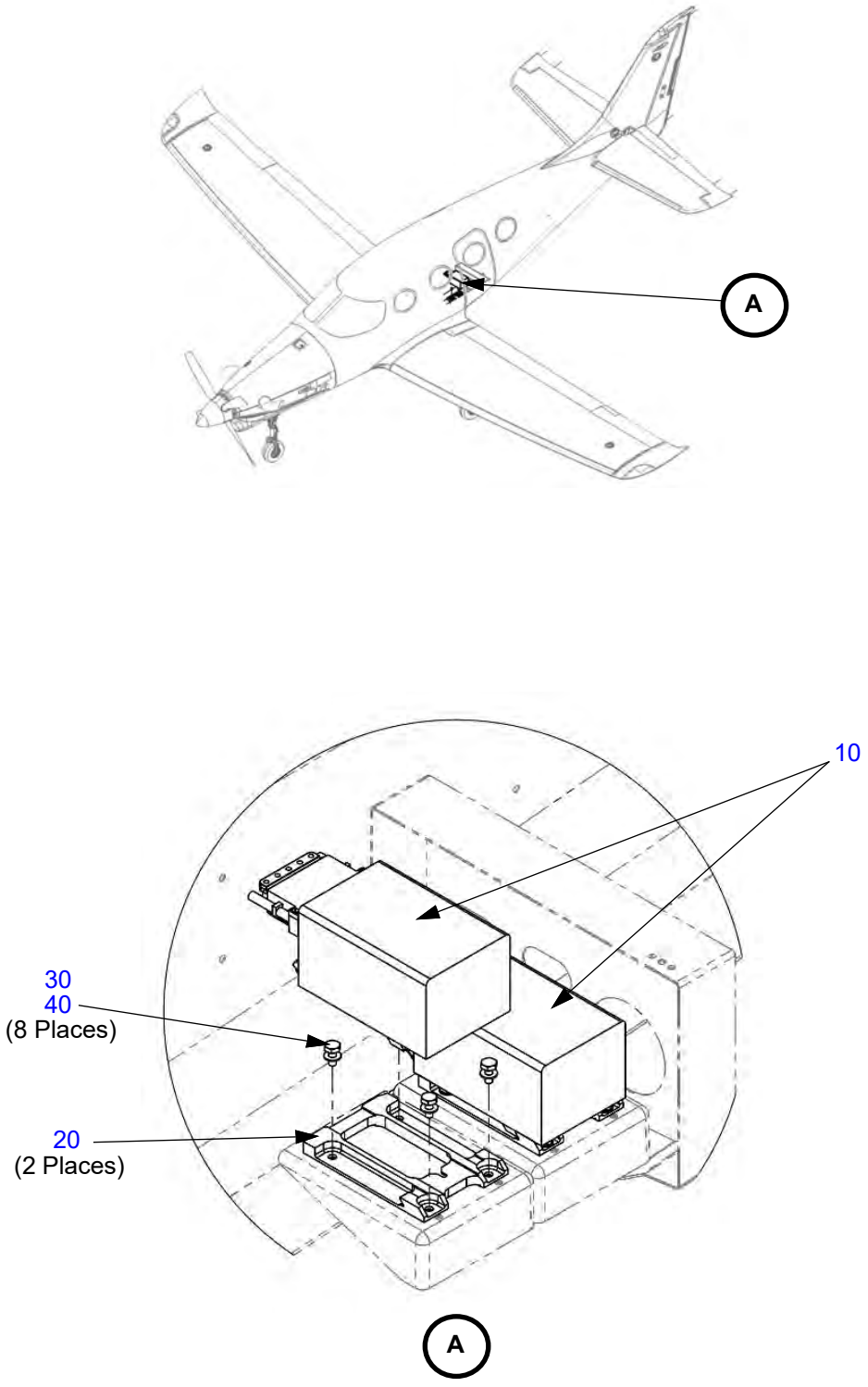

Table 34-20.3: Air Data Attitude Heading Reference System (ADAHRS)

Figure Item Number	Part Number	Part Name	Effectivity Code	Amount in Assy.
10	GSU 75B	011-03094-40 ADAHRS Unit	K003 and On	2
20	117-00608-00	GSU 75 Unit Rack	K003 and On	2
30	AN3-3A	Bolt, 10-32 x 15/32" Undrilled	K003 and On	8
40	NAS1149F0332P	Washer, Flat #10 x .032	K003 and On	8

Figure 34-20.4: L3 ESI-500 Electronic Standby Instrument System

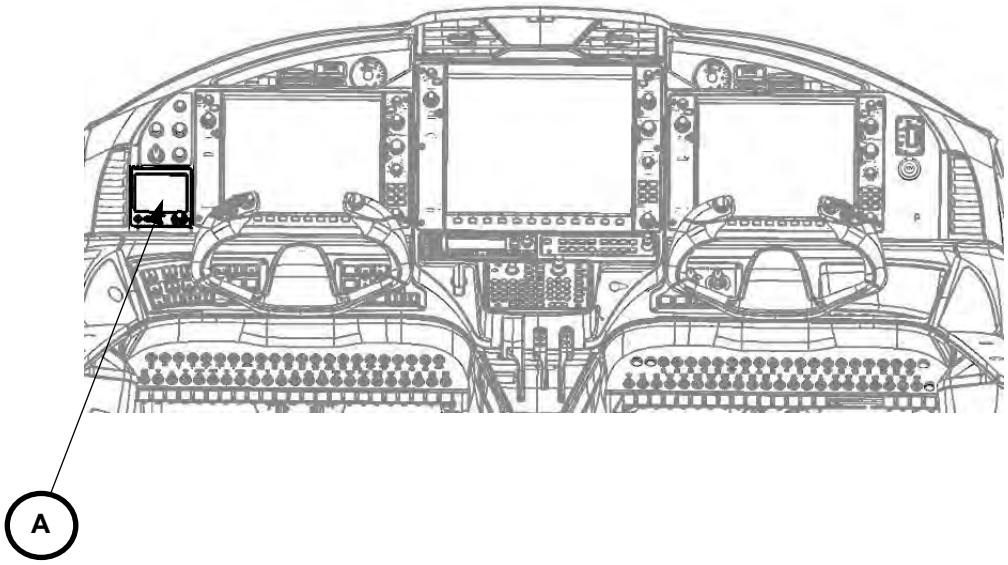

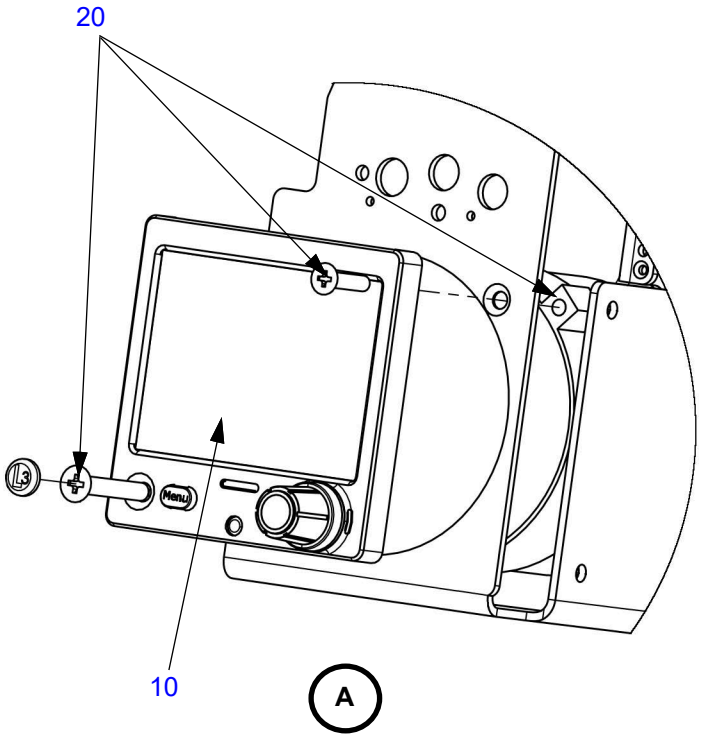

Table 34-20.4: L3 ESI-500 Electronic Standby Instrument System

Figure Item Number	Part Number	Part Name	Effectivity Code	Amount in Assy.
10	9200-15000-0101	ESI-500 Standby Instrument	K003-K039	1
20	9060-15000-02	ESI Installation Kit, L-3 Aviation Products	K003-K039	1

Figure 34-20.1: Garmin GI-275 Electronic Flight Display

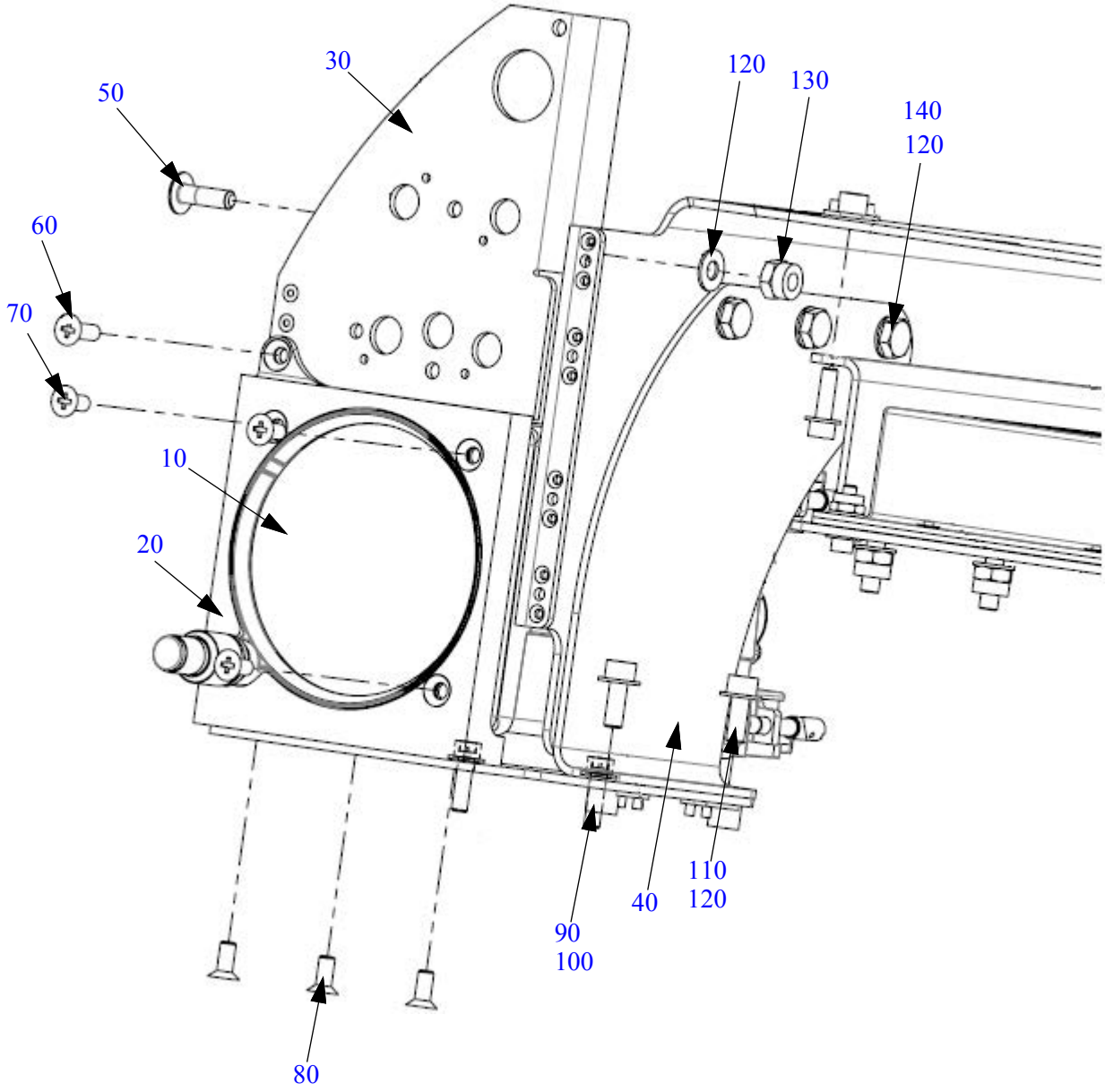

Table 34-20.1: Garmin GI-275 Electronic Flight Display

Figure Item Number	Part Number	Part Name	Effectivity Code	Amount in Assy.
10	011-04489-30	GI 275, Multifunction Instrument, Garmin	K040 and On	1
20	PK39200008	Face Plate, Backup Instrument, GI275, IP	K040 and On	1
30	AK39200007	Assy, Bracket, Dimmer Panel, IP	K040 and On	1
40	PK392000010	Bracket, LH, IP	K040 and On	1
50	AN525-10R10	Screw, Washer Head .190x.625 LG.	K040 and On	1
60	MS24693-S50	Screw, Machine, C'sunk .164x.500	K040 and On	1
70	MS24693-48B	Screw, Machine, C'sunk, Blk Oxide 164x.375	K040 and On	3
80	MS24693-S48	Screw, Machine, C'sunk .164x.375	K040 and On	3
90	NAS1352-08-9P	Screw, Socket Head .164-32 x .563	K040 and On	2
100	NAS1149FN832P	Washer, Flat #8 x .032	K040 and On	2
110	NAS1351-3-8P	Screw, Socket Head, .190-32 x .500	K040 and On	2
120	NAS1149F0332P	Washer, Flat #10 x .032	K040 and On	6
130	MS21044N3	Nut, Self-Locking, Steel 10-32	K040 and On	1
140	AN3-4A	Bolt, 10-32 x 17/32" Undrilled	K040 and On	3

This Page Intentionally Left Blank

INDEPENDENT POSITION DETERMINING

Figure 34-40.1: Primary Flight Displays

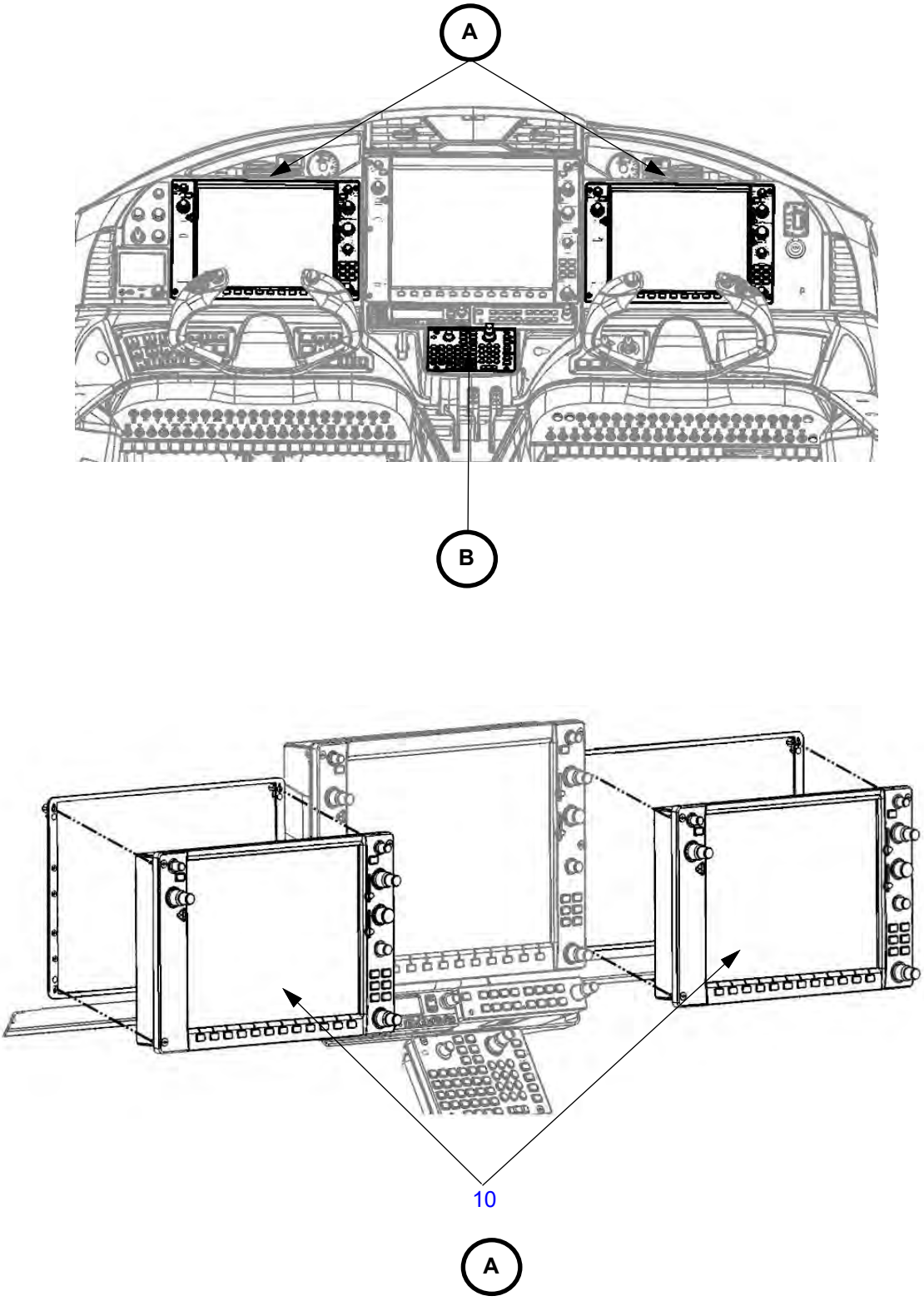

INDEPENDENT POSITION DETERMINING (Continued)

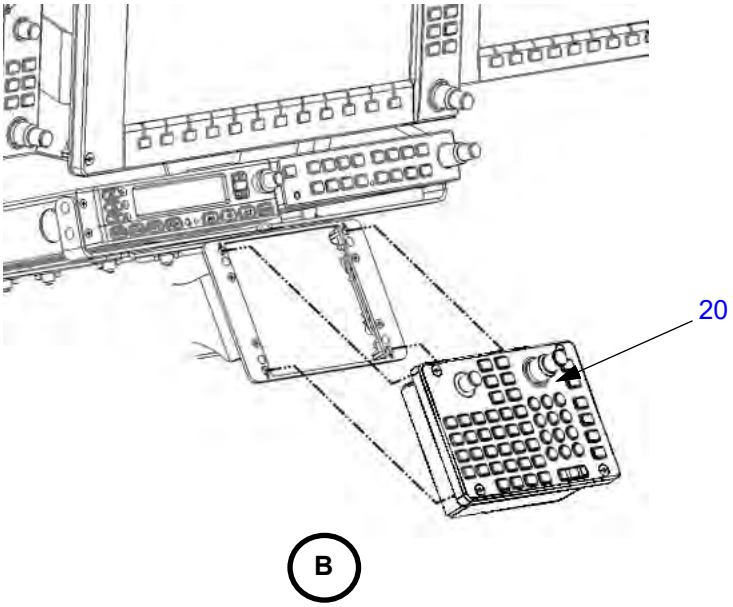

Table 34-40.1: Primary Flight Displays

Figure Item Number	Part Number	Part Name	Effectivity Code	Amount in Assy.
10	011-03470-00	GDU1050 Garmin Display Unit w/ Heading, Altitude Select, and Course Control	K003 and On	2
20	011-01428-20	GCU 477 Flight Management Controller, Analog Joystick	K003 and On	1

Figure 34-40.2: Multi-Function Display

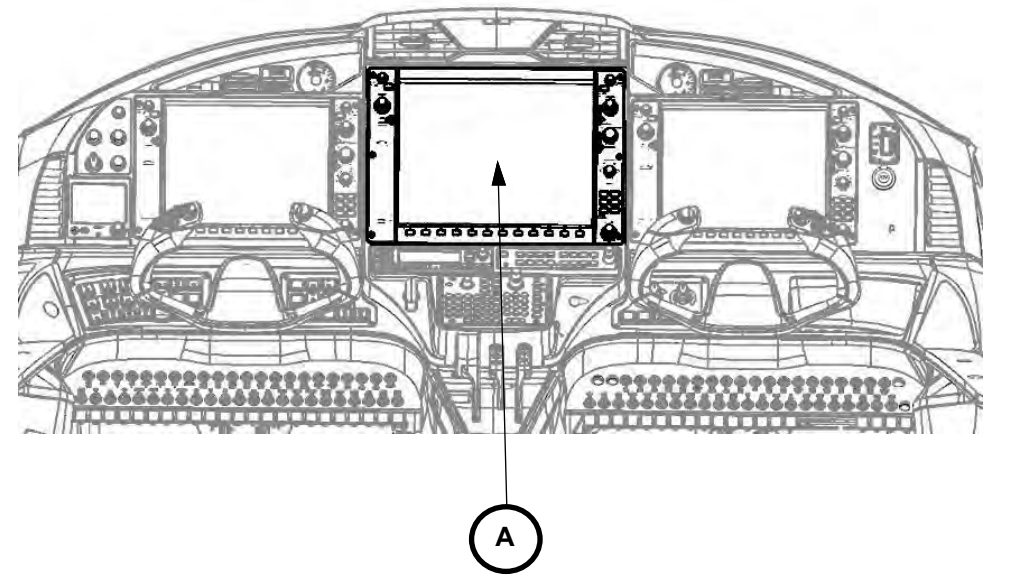

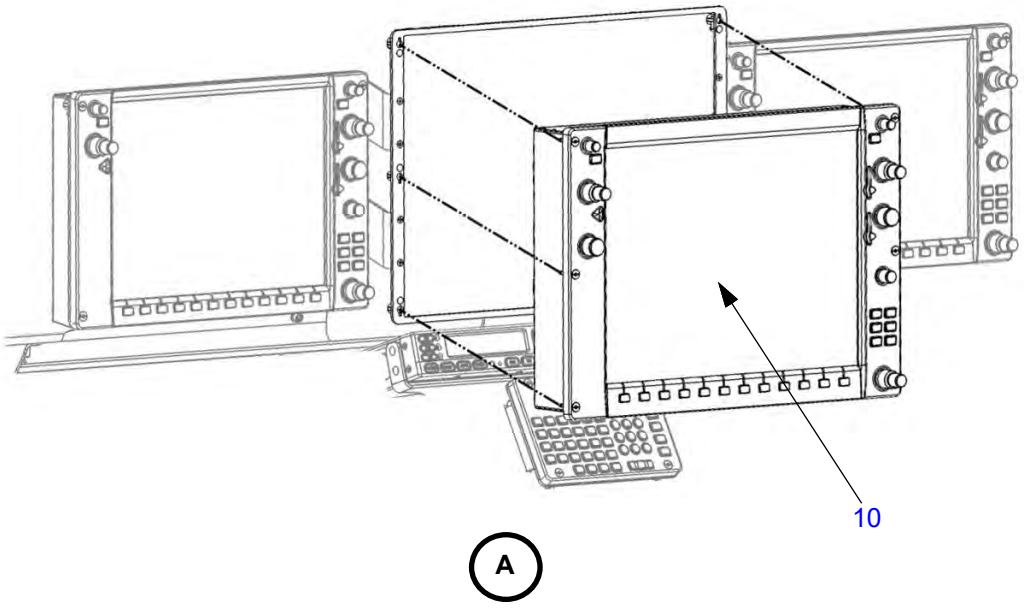

Table 34-40.2: Multi-Function Display

Figure Item Number	Part Number	Part Name	Effectivity Code	Amount in Assy.
10	011-03471-40	GDU 1250A Display W/ Heading, Altitude & Course Settings	K003 and On	1

Figure 34-40.3: TAS Processor

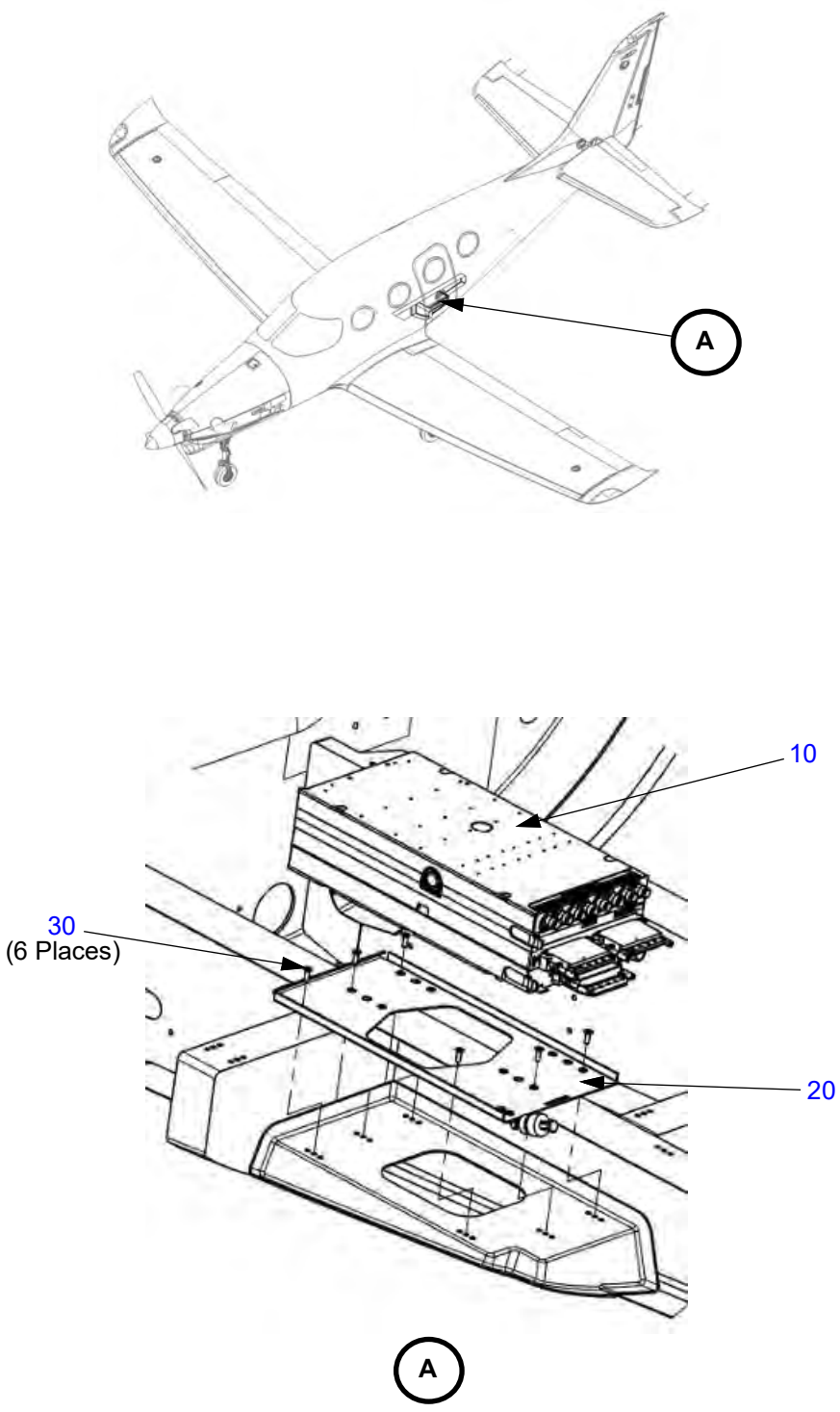

Table 34-40.3: TAS Processor

Figure Item Number	Part Number	Part Name	Effectivity Code	Amount in Assy.
10	011-02571-00	Microprocessor Traffic Advisory System (TAS)	K003 and On	1
20	115-00784-00	GTS Processor Horizontal Rack	K003 and On	1
30	MS24693-S50	Screw, Machine, C'sunk Ø .164 x 0.500	K003 and On	6

Figure 34-40.4: Navigation Antennas

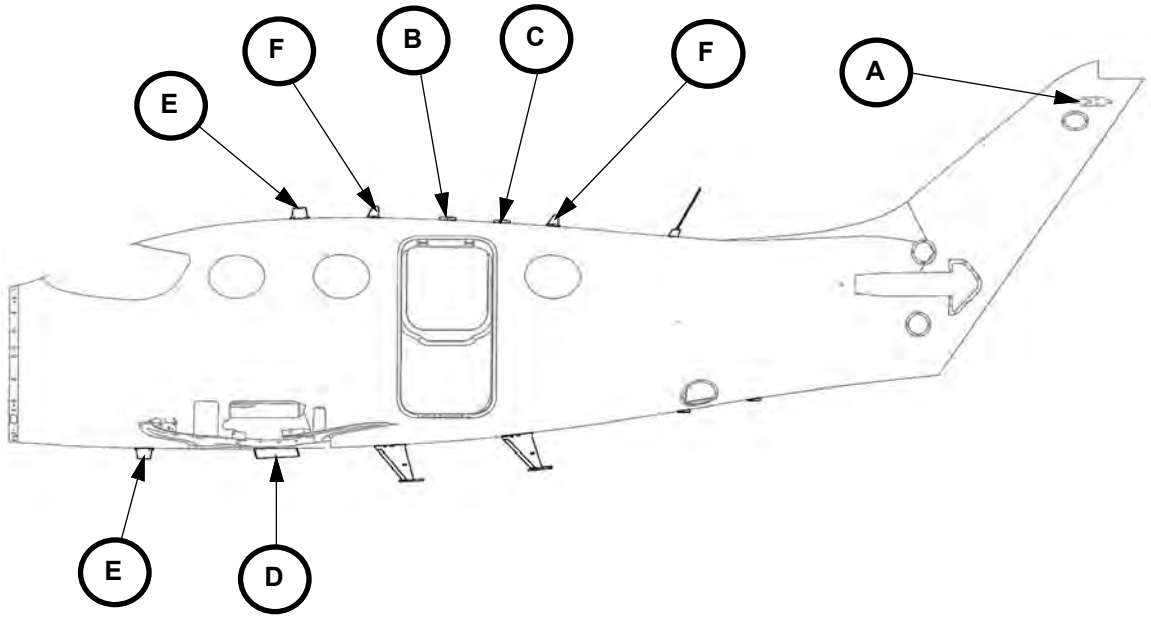

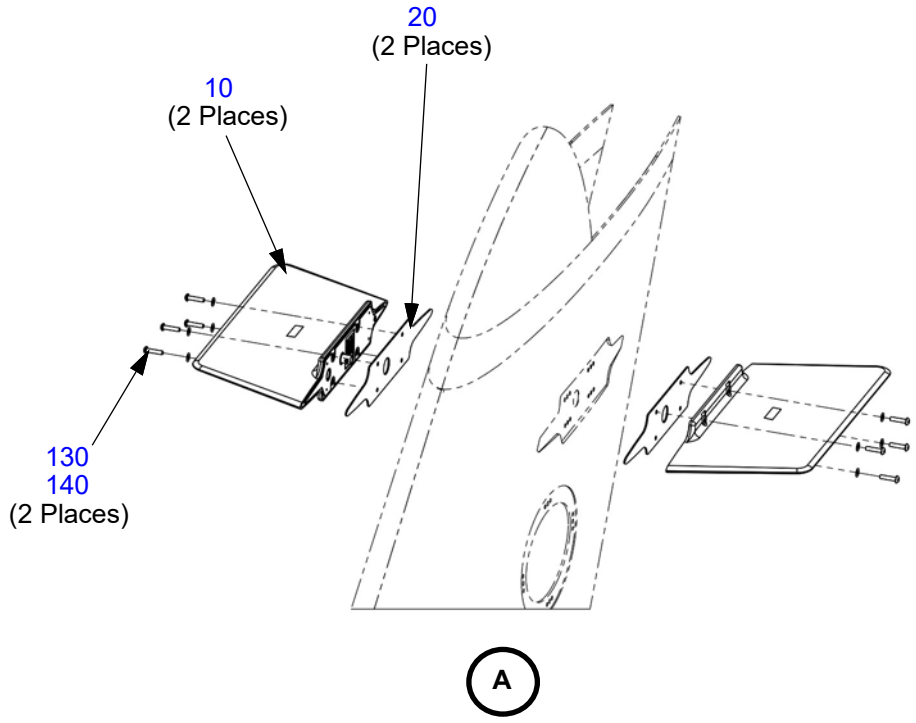

Figure 34-40.4: Navigation Antennas (Continued)

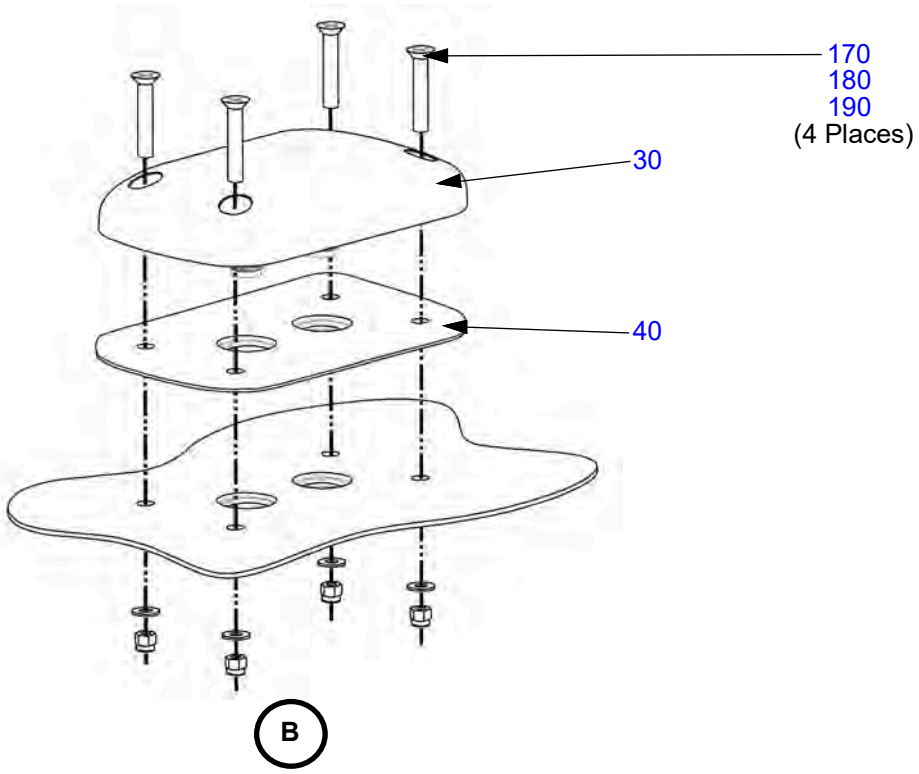

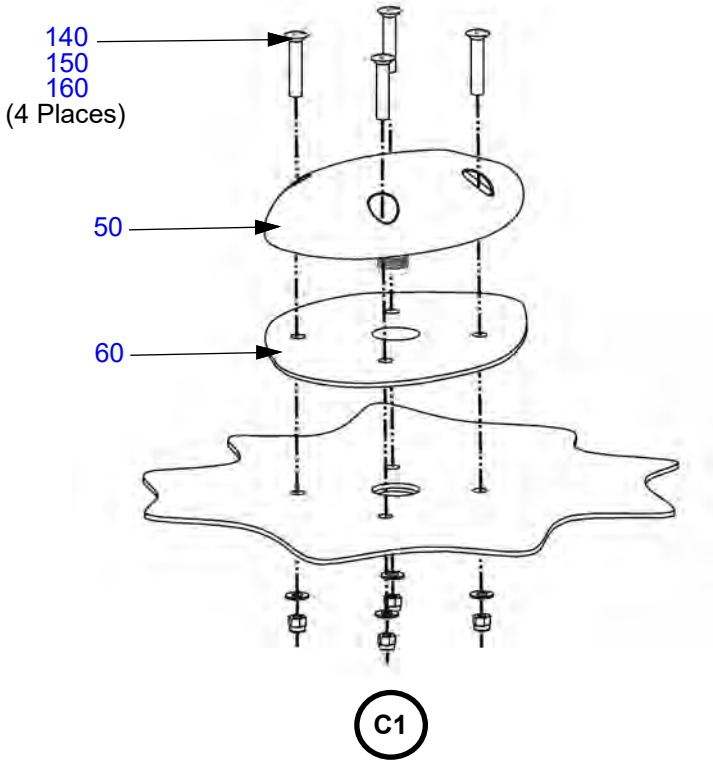

Figure 34-40.4: Navigation Antennas (Continued)

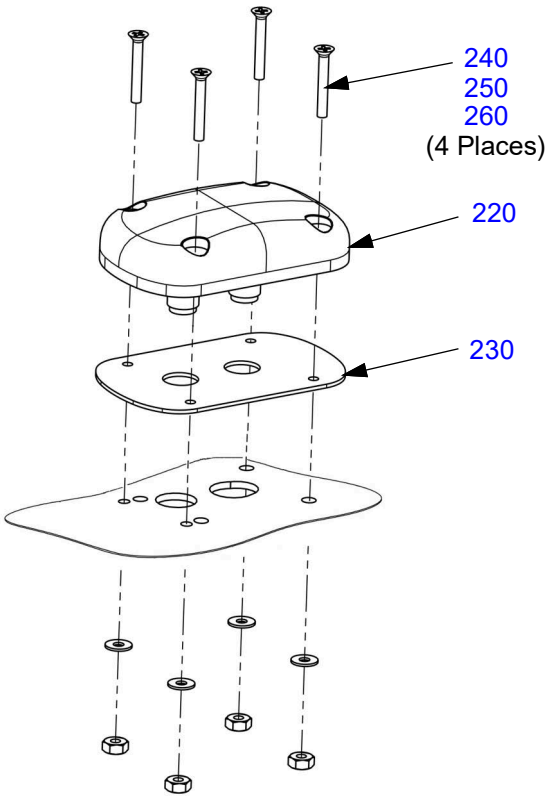

C2

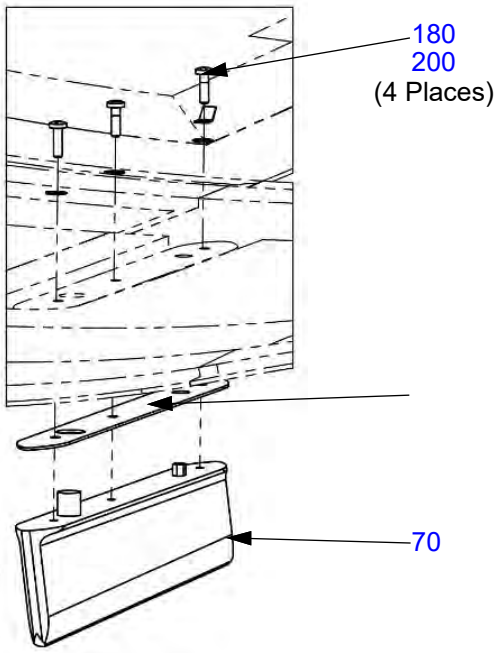

D

Figure 34-40.4: Navigation Antennas (Continued)

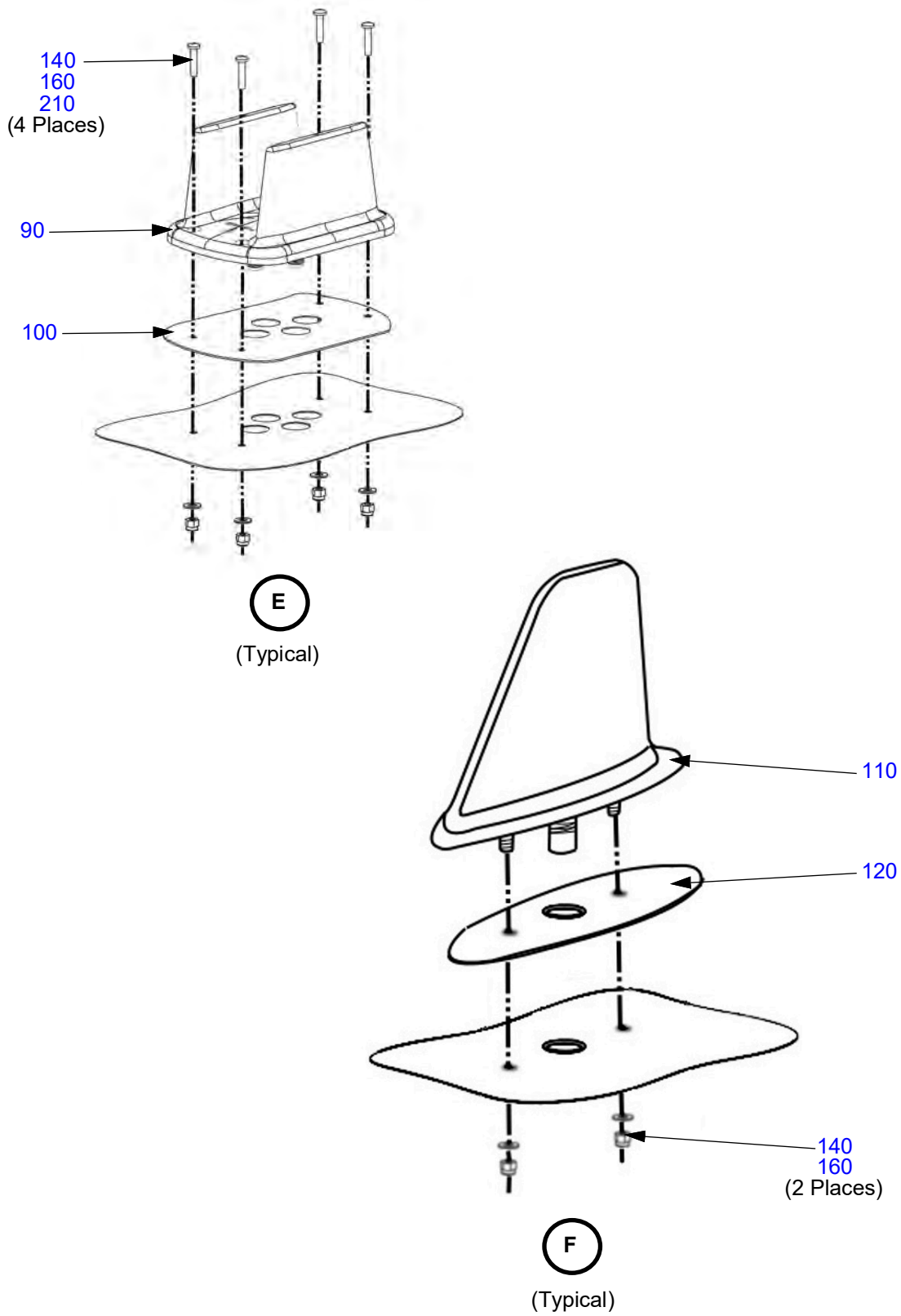

Table 34-40.4: Navigation Antennas

Figure Item Number	Part Number	Part Name	Effectivity Code	Amount in Assy.
10	CI 120-1	Antenna Blade, NAV / VOR / GS	K003 and On	2
20	AG867000-56	Gasket - VOR / LOC / GS Antenna	K003 and On	2
30	013-00245-00	Garmin GA 37 XM / WAAS Antenna	K003 and On	1
40	AG477000-39	Gasket - GPS / WAAS / XM Antenna	K003 and On	1
50	013-00235-00	Garmin GA 35 GPS / WAAS Antenna	K003 and On	1
60	AG477000-35	Gasket - GPS Antenna	K003 and On	1
70	CI 118	Antenna - Marker Beacon	K003 and On	1
80	AG627000-12	Gasket - Marker Beacon	K003 and On	1
90	010-10720-02	Ga 58 W/TNC Connectors, TAS Directional Antenna	K003 and On	2
100	AG822000-36	Gasket - TCAS Antenna	K003 and On	2
110	CI 105	Antenna, XPDR 1, DME Transponder	K003 and On	2
120	AG282000-04	Gasket - ATC/DME/L-Band Antenna	K003 and On	2
130	MS51957-47	Screw, Pan Head, .164 x .750 Lg., CRES	K003 and On	8
140	NAS1149FN816P	Washer, Flat #8 x .016	K003 and On	24
150	MS51960-50	Screw, Machine, C'sunk, 82°, CRES Ø .164 x 1.000	K003 and On	4
160	MS21083N08	Nut, Self-locking, Non-Metallic Insert .164-32	K003 and On	16
170	MS24694-C60	Screw, Machine, C'sunk, CRES Ø .190 x 1-5/32	K003 and On	4
180	NAS1149F0316P	Washer, Flat #10 x .016	K003 and On	7
190	MS21083N3	Nut, Self-locking, Non-Metallic Insert 10-32	K003 and On	4
200	MS27039-1-10	Screw, Pan Head, .190 x .656 Lg.	K003 and On	3
210	MS51957-48	Screw, Pan Head, .164 x .875 Lg., CRES	K003 and On	8
220	AT1621-62	Iridium/GPS L1 Antenna	Optional*	1
230	AG478000-10	Gasket - GPS/Iridium	Optional*	1

Figure Item Number	Part Number	Part Name	Effectivity Code	Amount in Assy.
240	MS51959-34	Screw, Machine, Countersunk, 82º, CRES, UNC-2A, #6 x 1.000	Optional*	4
250	NAS1149FN632P	Nut, Self-locking, Non-Metallic Insert .138-32	Optional*	4
260	MS21083N06	Washer, Flat #6 x .032	Optional*	4

*K003 - K010 with SB-0017 and SB-0019, K011 and on with SB-0019.

Figure 34-40.5: Cooling Fans

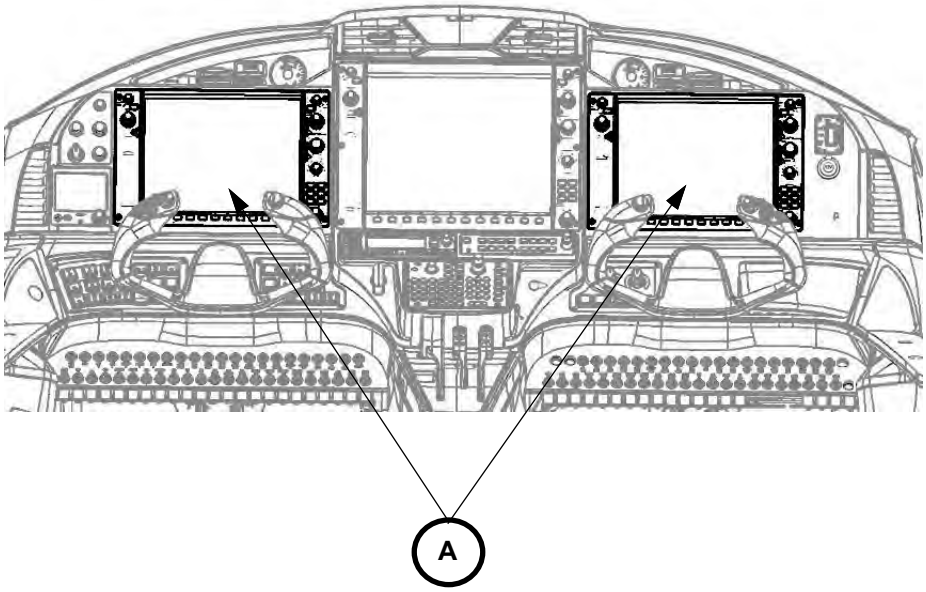

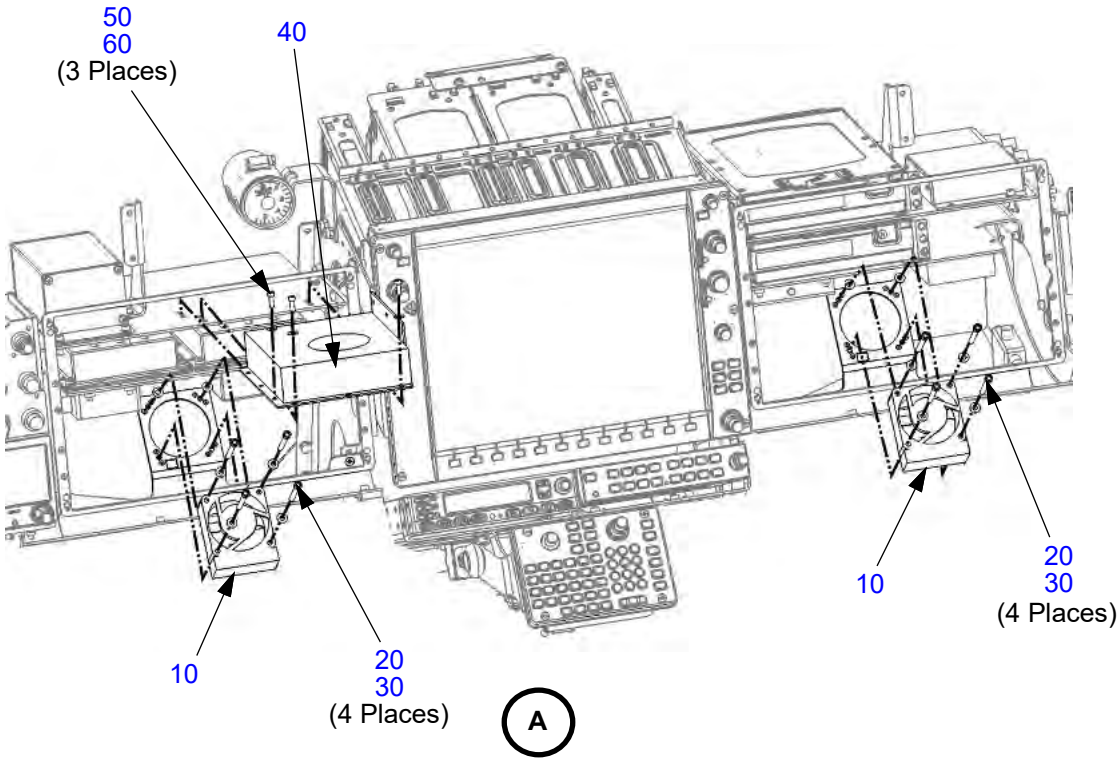

Table 34-40.5: Cooling Fans

Figure Item Number	Part Number	Part Name	Effectivity Code	Amount in Assy.
10	013-00102-00	GDU Cooling Fan	K003 and On	2
20	NAS1352-08-24P	Screw, Socket Head .164-32 x 1.500	K003 and On	8
30	NAS1149FN832P	Washer, Flat #8 x .032	K003 and On	8
40	305722-00	Safe 528 Avionics Cooling Fan	K003 and On	1
50	NAS1352-06-7P	Screw, Socket Head .138-32 x .438	K003 and On	3
60	NAS1149FN616P	Washer, Flat #6 x .016	K003 and On	3

This Page Intentionally Left Blank

DEPENDENT POSITION DETERMINING

Figure 34-50.1: Avionics System Interface

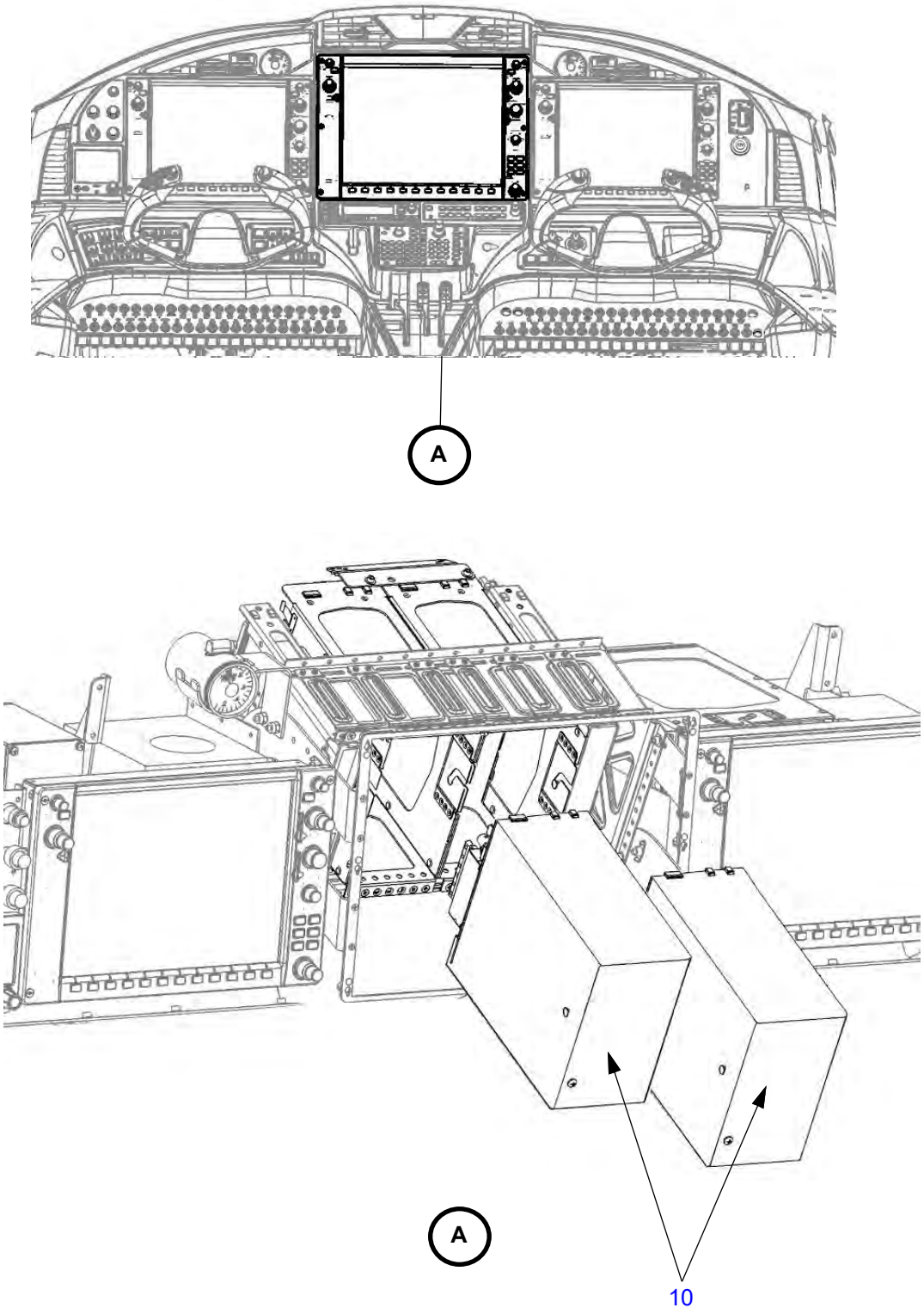

Table 34-50.1: Avionics System Interface

Figure Item Number	Part Number	Part Name	Effectivity Code	Amount in Assy.
10	011-03711-00 MOD 2	GIA 64W LRU, Remote, NAV/COM/GPS/ WAAS Data Processor	K003 and On	2

CHAPTER 35

Oxygen

This Page Intentionally Left Blank

Table of Contents
and
List of Effective Pages

Chapter/Section	Page Number	Effective Date
35-Title	Page 1	03 Apr 2020
35-Title	Page 2	03 Apr 2020
35-LOEP	Page 1	26 Mar 2024
35-LOEP	Page 2	03 Apr 2020
35-TOC	Page 1	26 Mar 2024
35-TOC	Page 2	03 Apr 2020

Oxygen

35-00	Page 1	26 Mar 2024
35-00	Page 2	26 Mar 2024
35-00	Page 3	26 Mar 2024
35-00	Page 4	26 Mar 2024
35-00	Page 5	26 Mar 2024
35-00	Page 6	26 Mar 2024
35-00	Page 7	26 Mar 2024
35-00	Page 8	26 Mar 2024
35-00	Page 9	26 Mar 2024
35-00	Page 10	26 Mar 2024
35-00	Page 11	26 Mar 2024
35-00	Page 12	26 Mar 2024
35-00	Page 13	26 Mar 2024
35-00	Page 14	26 Mar 2024
35-00	Page 15	26 Mar 2024
35-00	Page 16	26 Mar 2024
35-00	Page 17	26 Mar 2024
35-00	Page 18	26 Mar 2024
35-00	Page 19	26 Mar 2024
35-00	Page 20	26 Mar 2024
35-00	Page 21	26 Mar 2024
35-00	Page 22	26 Mar 2024
35-00	Page 23	26 Mar 2024
35-00	Page 24	26 Mar 2024

This Page Intentionally Left Blank

CHAPTER 35

Table of Contents

List of Effective Pages ..... 35-LOEP / Page 1
Table of Contents ..... 35-TOC / Page1

Paragraph **Page Number**

Oxygen

Figure 35-0.1: Oxygen System (SN: K003-K036) ..... 35-0 / Page 1
Table 35-0.1: Oxygen System (SN: K003-K036) ..... 35-0 / Page 8
Figure 35-0.2: Oxygen System (SN: K037 and On) ..... 35-0 / Page 11
Table 35-0.2: Oxygen System (SN: K037 and On) ..... 35-0 / Page 20

This Page Intentionally Left Blank

OXYGEN

Figure 35-0.1: Oxygen System (SN: K003-K036)

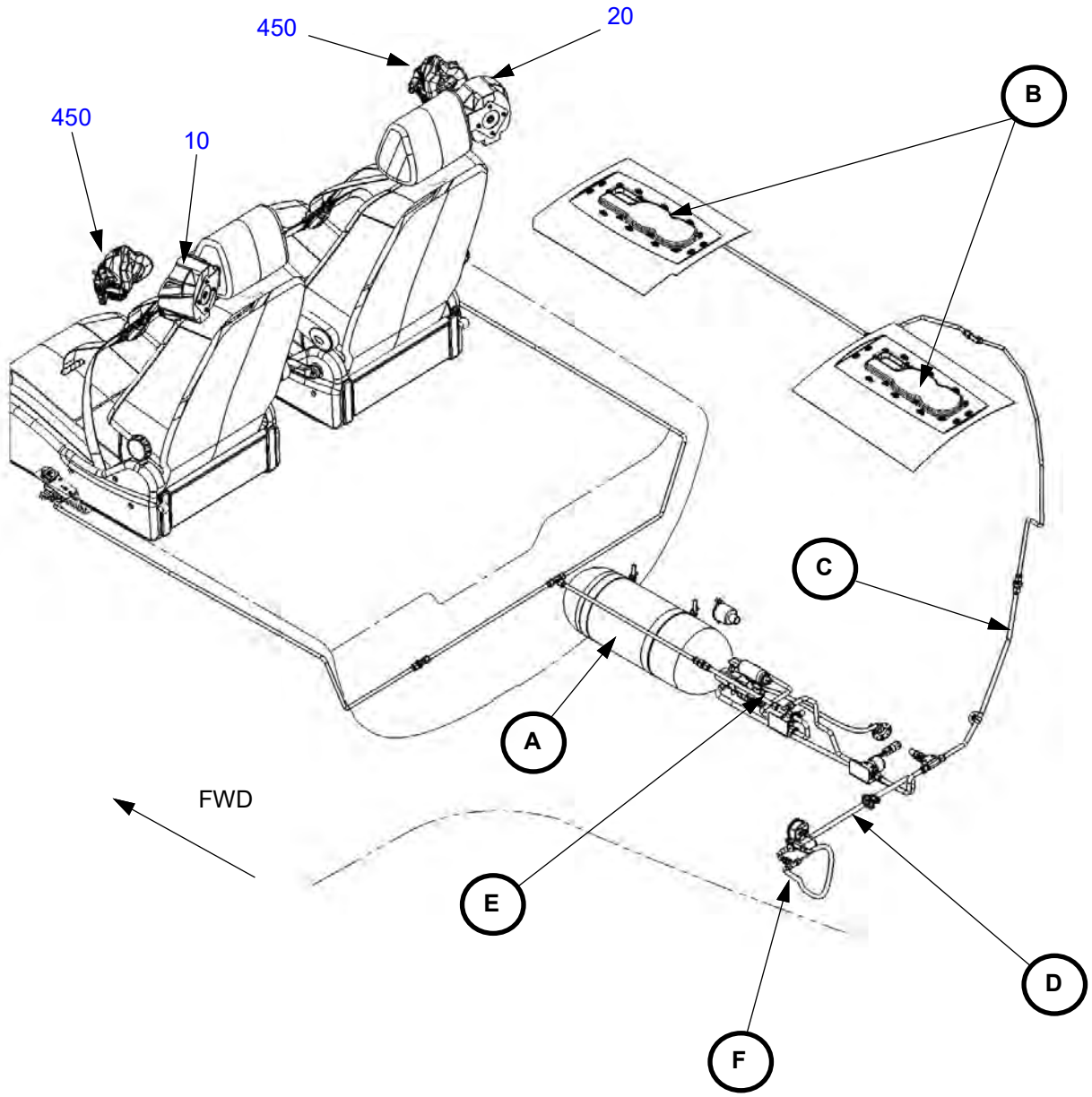

Figure 35-0.1: Oxygen System (SN: K003-K036) (Continued)

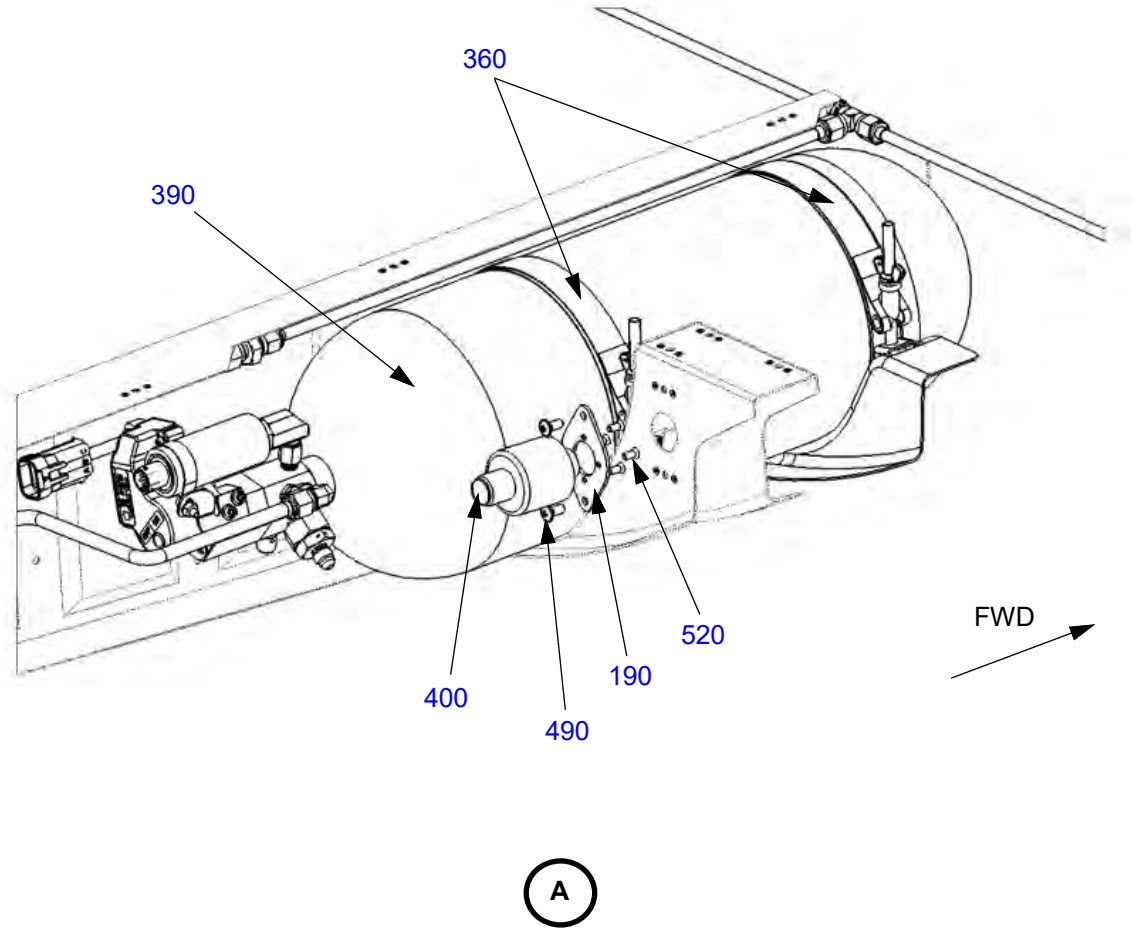

Figure 35-0.1: Oxygen System (SN: K003-K036) (Continued)

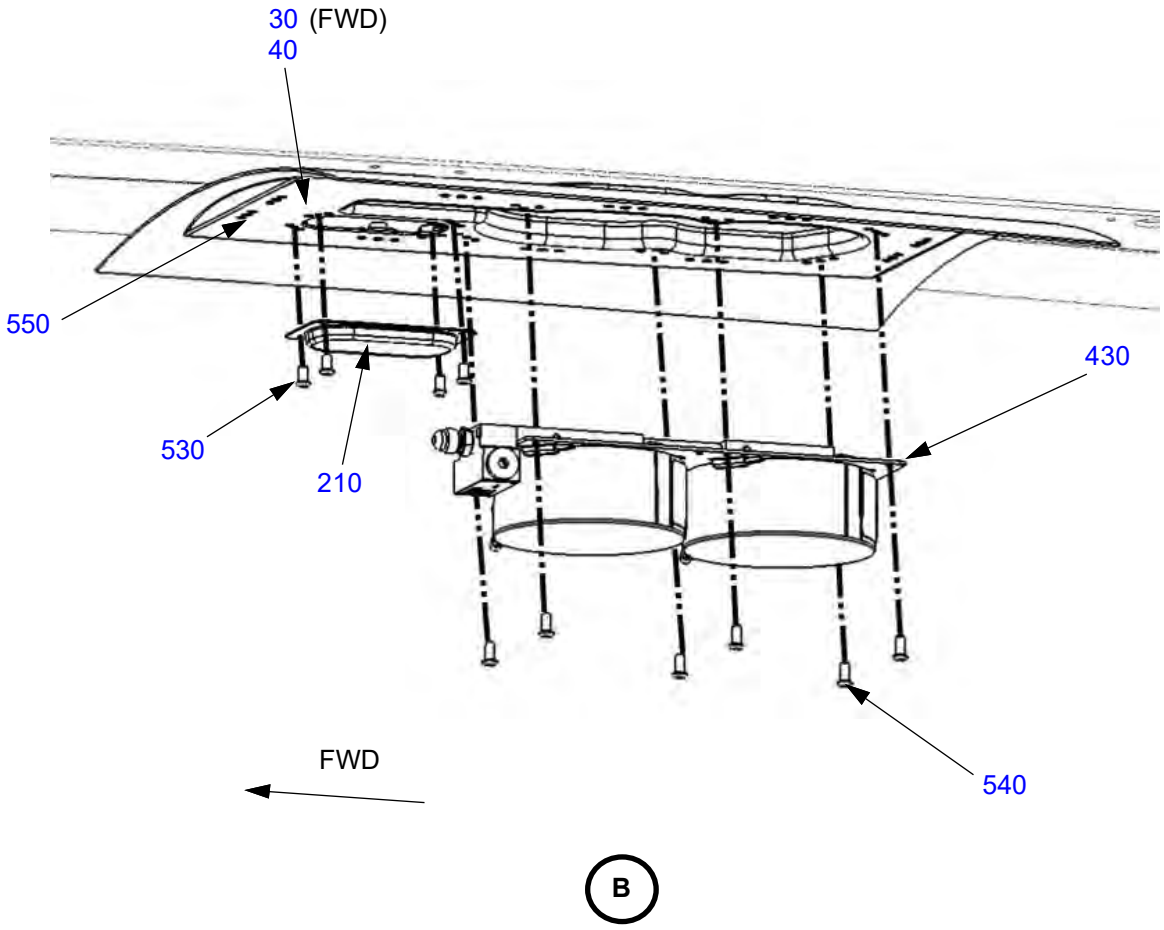

Aft MDS shown, forward MDS is similar.

Figure 35-0.1: Oxygen System (SN: K003-K036) (Continued)

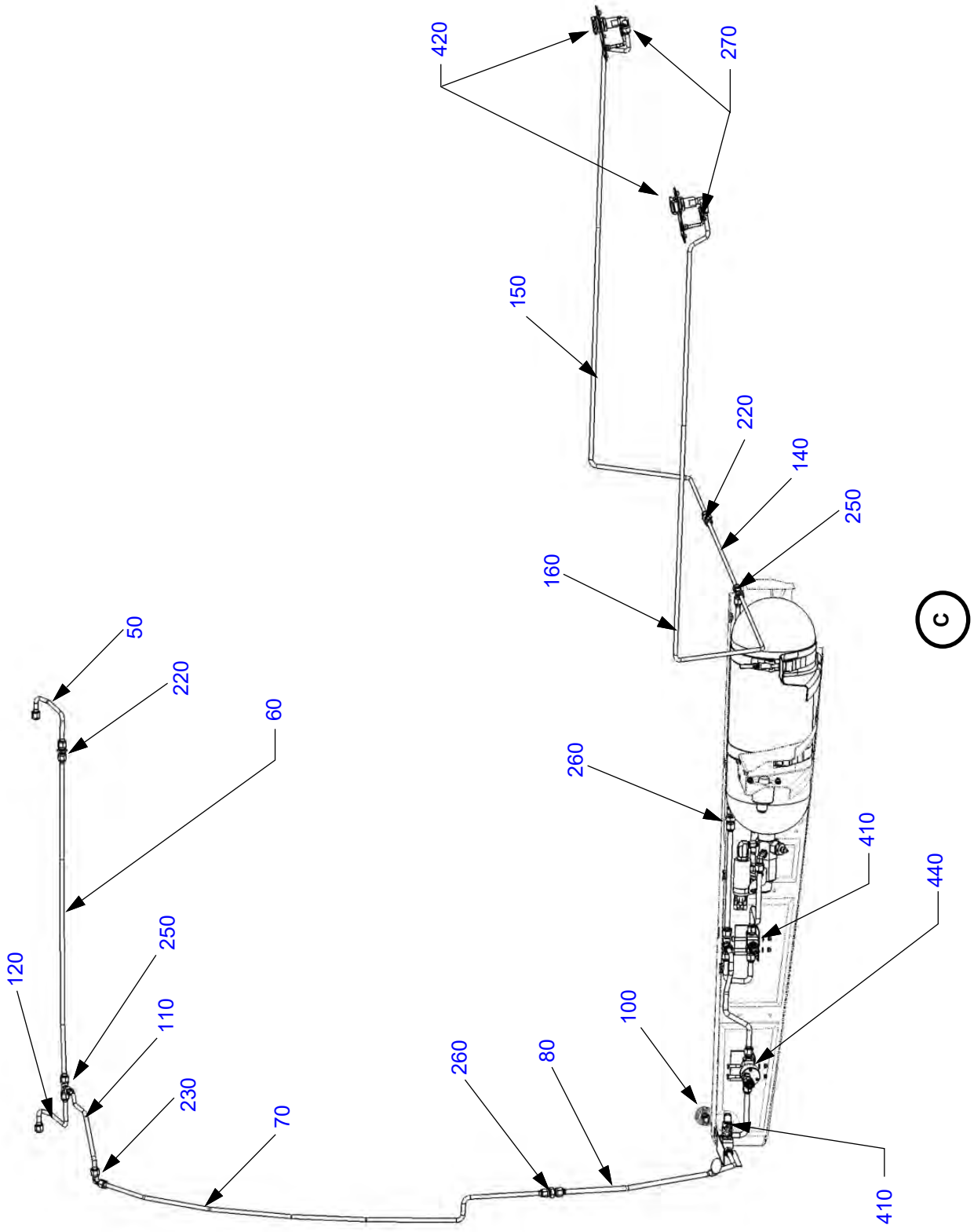

FFigure 35-0.1: Oxygen System (SN: K003-K036) (Continued)

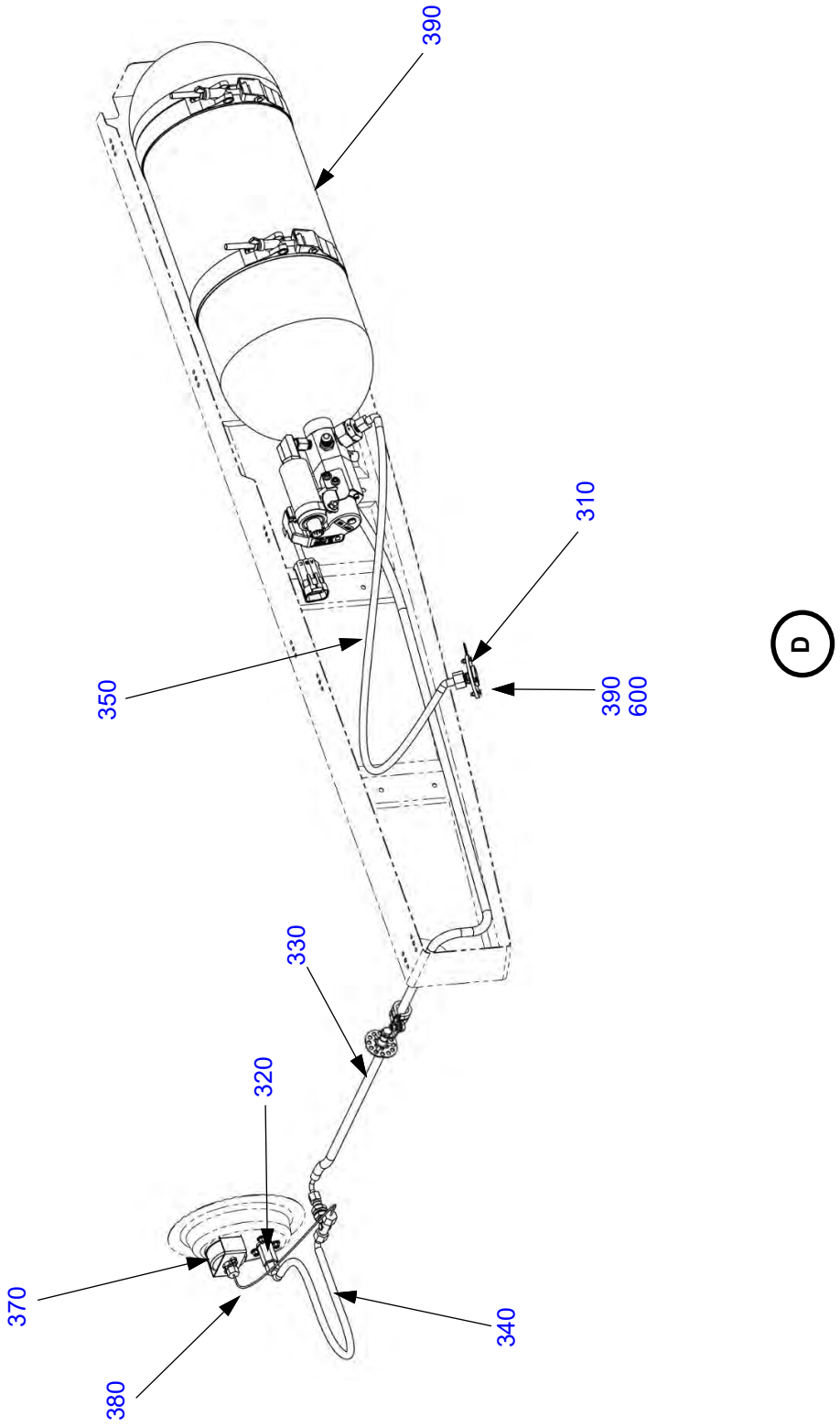

Figure 35-0.1: Oxygen System (SN: K003-K036) (Continued)

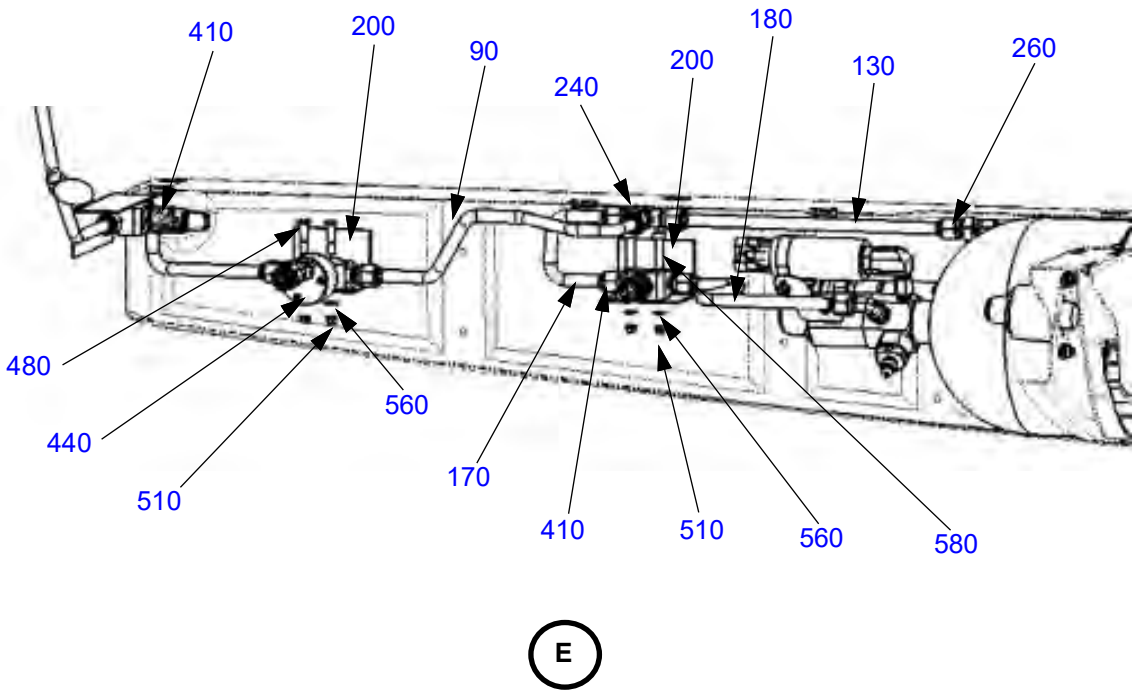

Figure 35-0.1: Oxygen System (SN: K003-K036) (Continued)

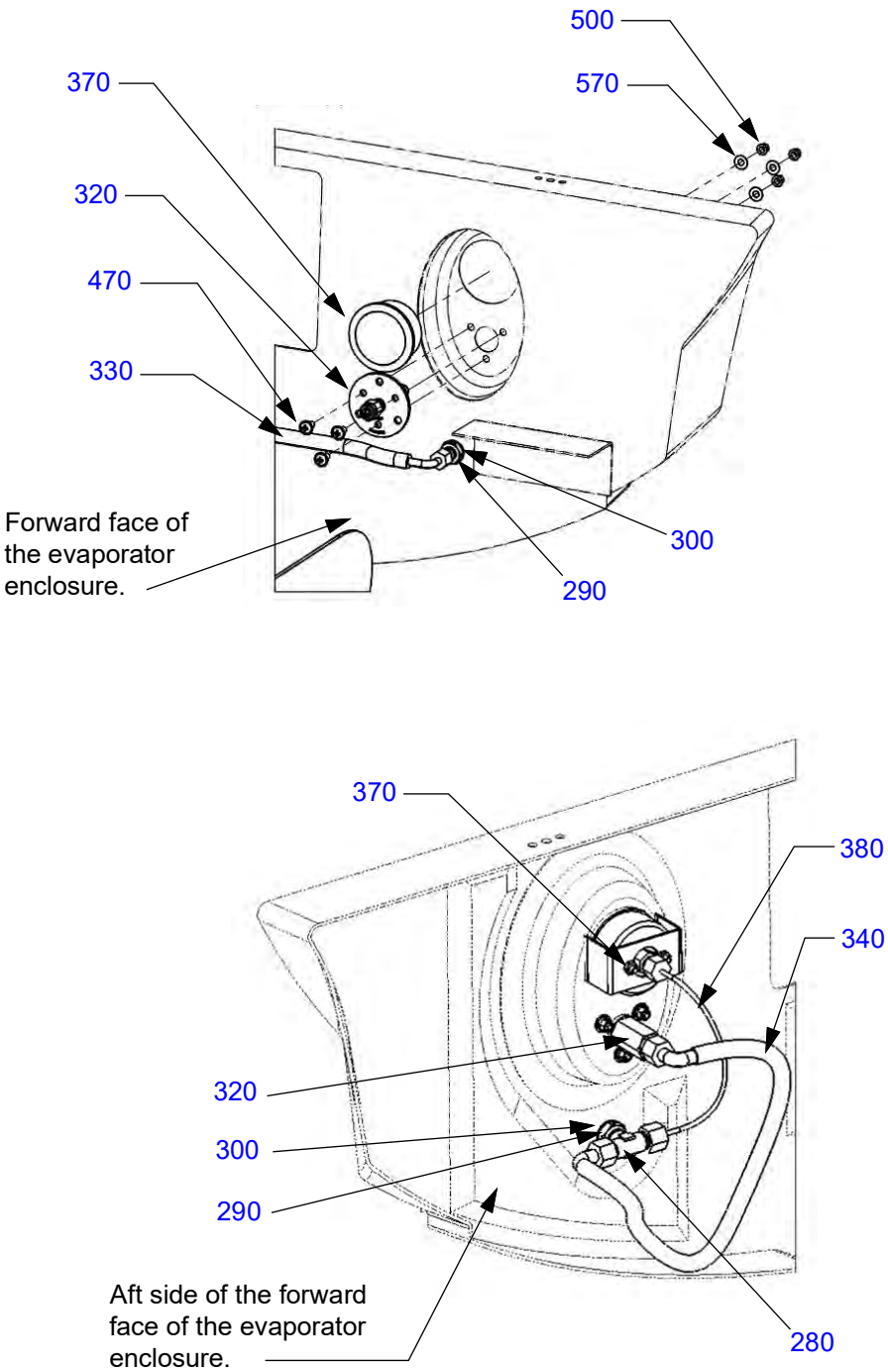

Table 35-0.1: Oxygen System (SN: K003-K036)

Figure Item Number	Part Number	Part Name	Effectivity Code	Amount in Assy.
10	AK35111001	Installation, Box, Stowage, Crew O2 Mask, LH	K003 - K036	1
20	AK35111002	Installation, Box, Stowage, Crew O2 Mask, RH	K003 - K036	1
30	AK35202001	Assy, Bracket, O2 MDS, Fwd	K003 - K036	1
40	AK35202002	Assy, Bracket, O2 MDS, Aft	K003 - K036	1
50	AK35201007	Low Pressure O2 Line, Pax, Union To MDS Fwd	K003 - K036	1
60	AK35201006	Low Pressure O2 Line, Pax, Tee To Union	K003 - K036	1
70	AK35201004	Low Pressure O2 Line, Pax, Reducer To Elbow	K003 - K036	1
80	AK35201003	Low Pressure O2 Line, Pax, Switch To Reducer	K003 - K036	1
90	AK35201001	Low Pressure O2 Line, Pax, Tee To Sole-noid	K003 - K036	1
100	AK35201002	Low Pressure O2 Line, Pax, Solenoid To Switch	K003 - K036	1
110	AK35201005	Low Pressure O2 Line, Pax, Union To Tee	K003 - K036	1
120	AK35201008	Low Pressure O2 Line, Pax, Tee To MDS Aft	K003 - K036	1
130	AK35101001	Low Pressure O2 Line, Crew, Tee To Reducer	K003 - K036	1
140	AK35101002	Low Pressure O2 Line, Crew, Straight	K003 - K036	2
150	AK35101003	Low Pressure O2 Line, Crew, LH	K003 - K036	1
160	AK35101004	Low Pressure O2 Line, Crew, RH	K003 - K036	1
170	AK35001002	Low Pressure O2 Line, Switch To Tee	K003 - K036	1
180	AK35001001	Low Pressure O2 Line, Regulator To Switch	K003 - K036	1
190	PK35000001	Mount Plate, Altitude Switch	K003 - K036	1

Figure Item Number	Part Number	Part Name	Effectivity Code	Amount in Assy.
200	PK35000002	Flange, O2 Component Support	K003 - K036	2
210	PK35202003	Cover, Antenna Access, O2 MDS Bracket	K003 - K036	2
220	AN815-4D	Union, Flared Tube, .250 Nominal Tube Size	K003 - K036	2
230	AN821-4D	90 Deg. Elbow, 37 Deg. Flare	K003 - K036	1
240	AS1035W050505	Tee, 37 Deg Flare, 5/16" Tube	K003 - K036	1
250	AS1035W040404	Tee, 37 Deg Flare, 1/4" OD Tube	K003 - K036	2
260	AS5174W0504	Reducer - External Thread Flared Tube	K003 - K036	2
270	AS5195J0402	Elbow, Flared, Tube And Pipe Threads, 90°, Stainless Steel	K003 - K036	2
280	10011596	Bulkhead Tee, 37 Deg. Flare, Zodiac	K003 - K036	1
290	AN316-6R	Nut, Jam, Hexagon, Cad Steel 3/8-24	K003 - K036	2
300	NAS1149F0632P	Washer, Flat 3/8 x .032	K003 - K036	2
310	171-22	Indicator, Oxygen High Pressure Relief Assy - Zodiac	K003 - K036	1
320	26884-39	Charging Valve Assy - Zodiac	K003 - K036	1
330	3973-03-480-000	High Pressure Flex Line - Zodiac	K003 - K036	1
340	3973-03-140-000	High Pressure Flex Line - Zodiac	K003 - K036	1
350	3954-04-240-000	High Pressure Flex Line - Zodiac	K003 - K036	1
360	40422-03	Clamp, Band - Zodiac	K003 - K036	2
370	800435-05	Pressure Gauge, Oxygen - Zodiac	K003 - K036	1
380	803197-12	High Pressure Capillary Line Assy - Zodiac	K003 - K036	1
390	806959-03	Cylinder Regulator Assy - Zodiac	K003 - K036	1
400	10015326	Altitude Switch	K003 - K036	1
410	CMK80-03	Low Pressure Switch - Eros/zodiac	K003 - K036	2
420	DPB181-06	Crew Outlet, Oxygen, Quick Disconnect - Eros/zodiac	K003 - K036	2
430	EN2-421048	MDS Double - Zodiac	K003 - K036	2

Figure Item Number	Part Number	Part Name	Effectivity Code	Amount in Assy.
440	AK35100015	Solenoid Valve, Oxygen, Assy With Connector	K003 - K036	1
450	MD40-40-004	Crew Oxygen Mask - Regulator - Eros/ Zodiac	K003 - K036	2
*460	AN525-832R6	Screw, Washer Head, .164 x .375 Lg.	K003 - K036	3
470	AN525-10R18	Screw, Washer Head, .190 x 1.125 Lg.	K003 - K036	2
480	AN525-10R8	Screw, Washer Head, .190 x .500 Lg.	K003 - K036	2
490	MS21043-08	Nut, Self-locking, 800°, Reduced #8-32	K003 - K036	3
500	MS21043-3	Nut, Self-locking, 800°, Reduced #10-32	K003 - K036	A/R
510	MS24693-S26	Screw, Machine, C'sunk Ø .138 x 0.375	K003 - K036	4
520	MS51957-27	Screw, Pan Head, .138 x .312 Lg., CRES	K003 - K036	8
530	MS51957-28	Screw, Pan Head, .138 x .375 Lg., CRES	K003 - K036	28
540	MS51957-30	Screw, Pan Head, .138 x ..500 Lg., CRES	K003 - K036	4
550	NAS1149F0316P	Washer, Flat #10 x .016	K003 - K036	A/R
560	NAS1149FN816P	Washer, Flat #8 x .016	K003 - K036	3
570	NAS1351-3-16P	Screw, Socket Head Ø .190-32 x 1.000	K003 - K036	2
580	MS24693-C5	Screw, Machine, C'sunk, CRES Ø .112 x 0.437	K003 - K036	4
*590	MS21042L04	Nut, Self-locking, 450°, Reduced #4-40	K003 - K036	4
600	NAS1149FN416P	Washer, Flat #4 x .016	K003 - K036	4

*Not Illustrated

Figure 35-0.2: Oxygen System (SN: K037 and On)

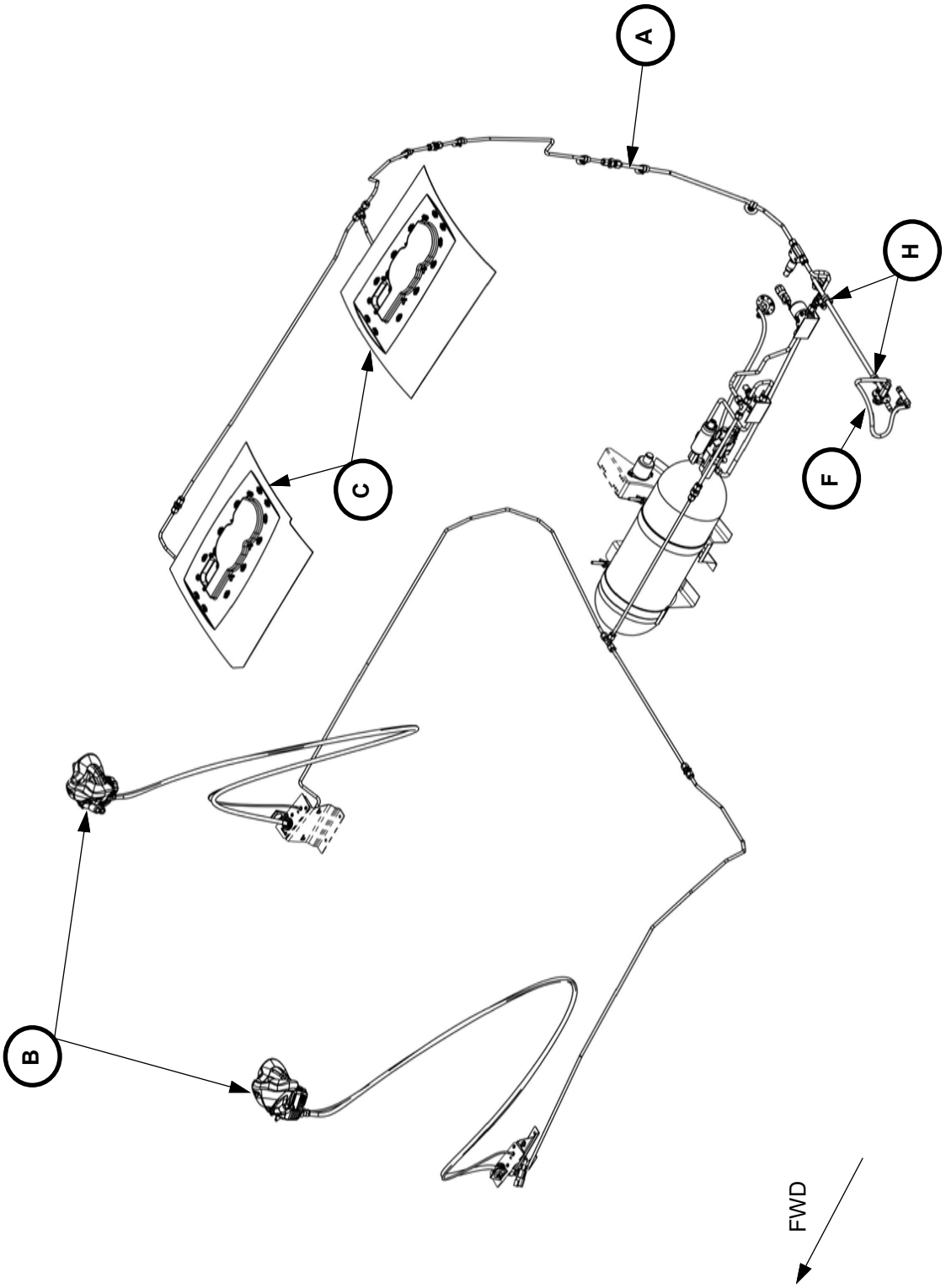

Figure 35-0.2: Oxygen System (SN: K037 and On) (Continued)

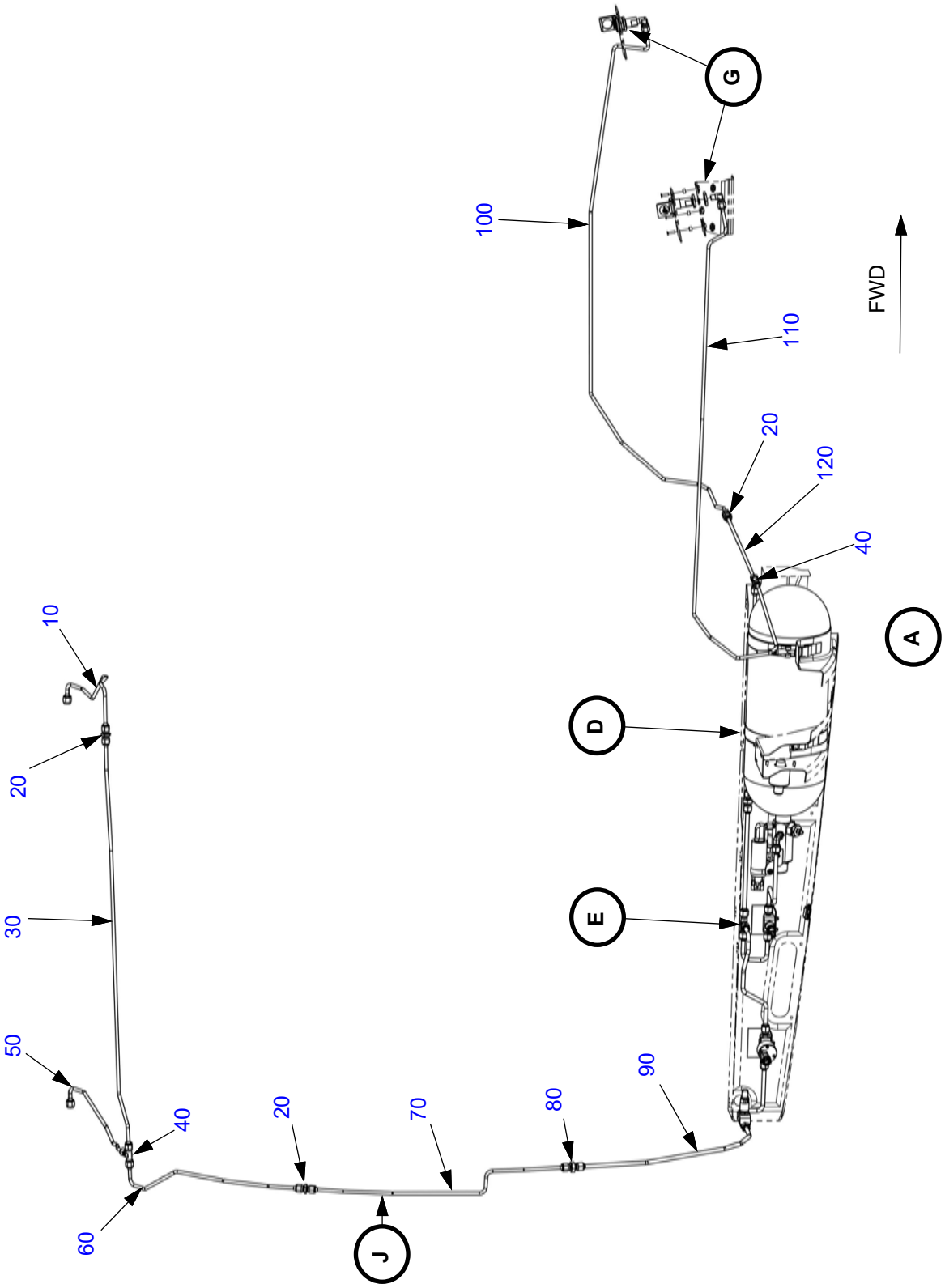

Figure 35-0.2: Oxygen System (SN: K037 and On) (Continued)

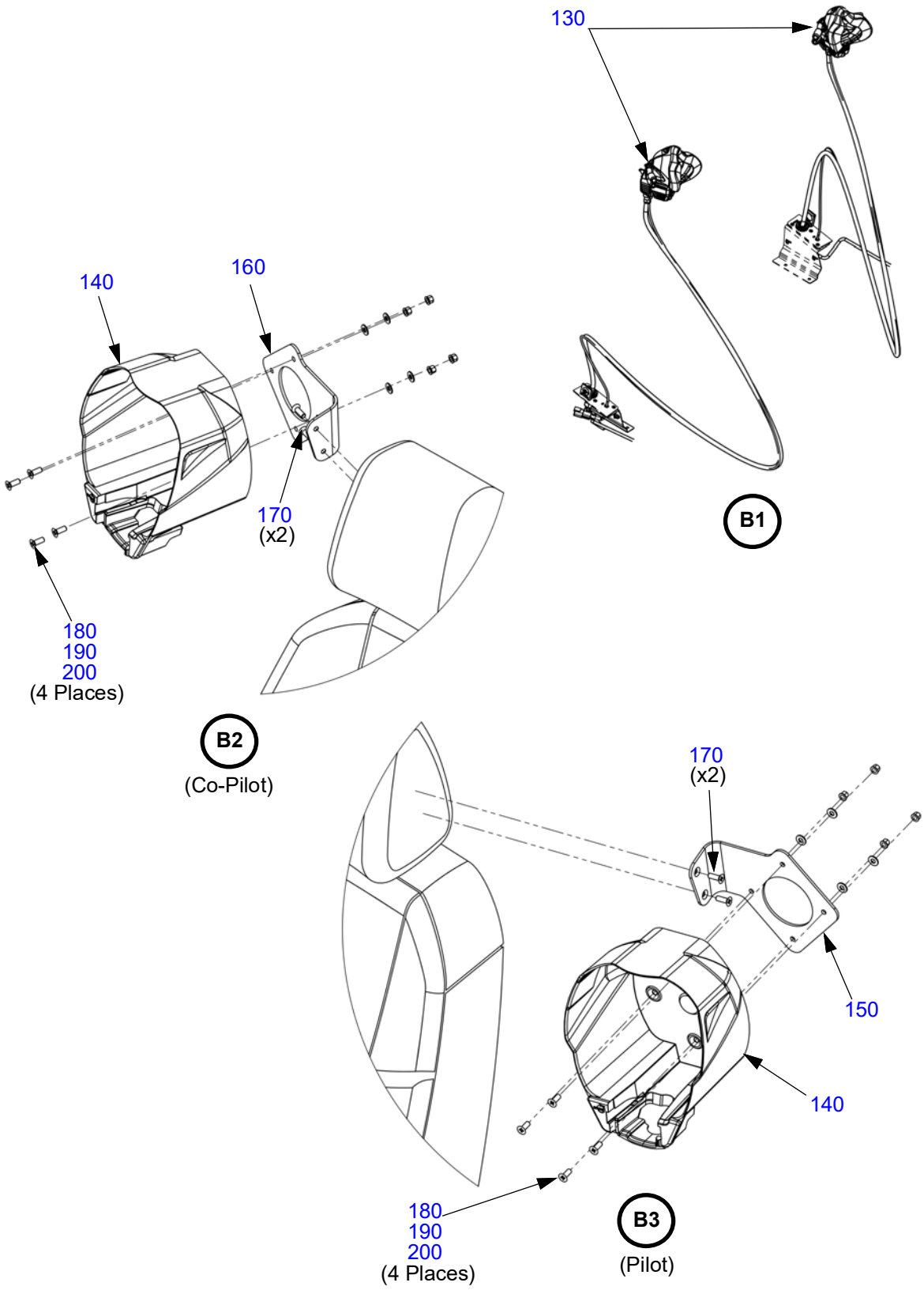

Figure 35-0.2: Oxygen System (SN: K037 and On) (Continued)

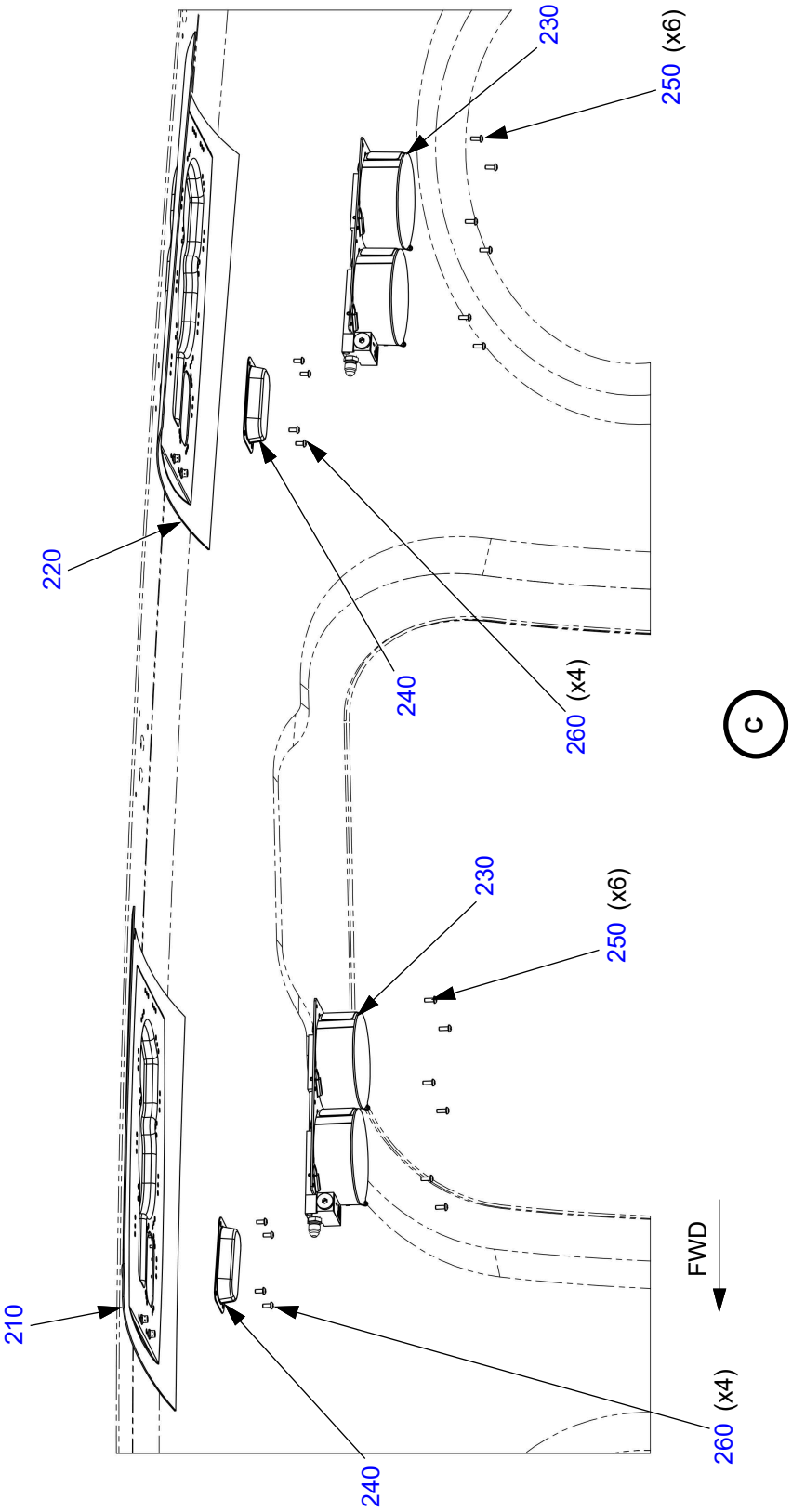

Figure 35-0.2: Oxygen System (SN: K037 and On) (Continued)

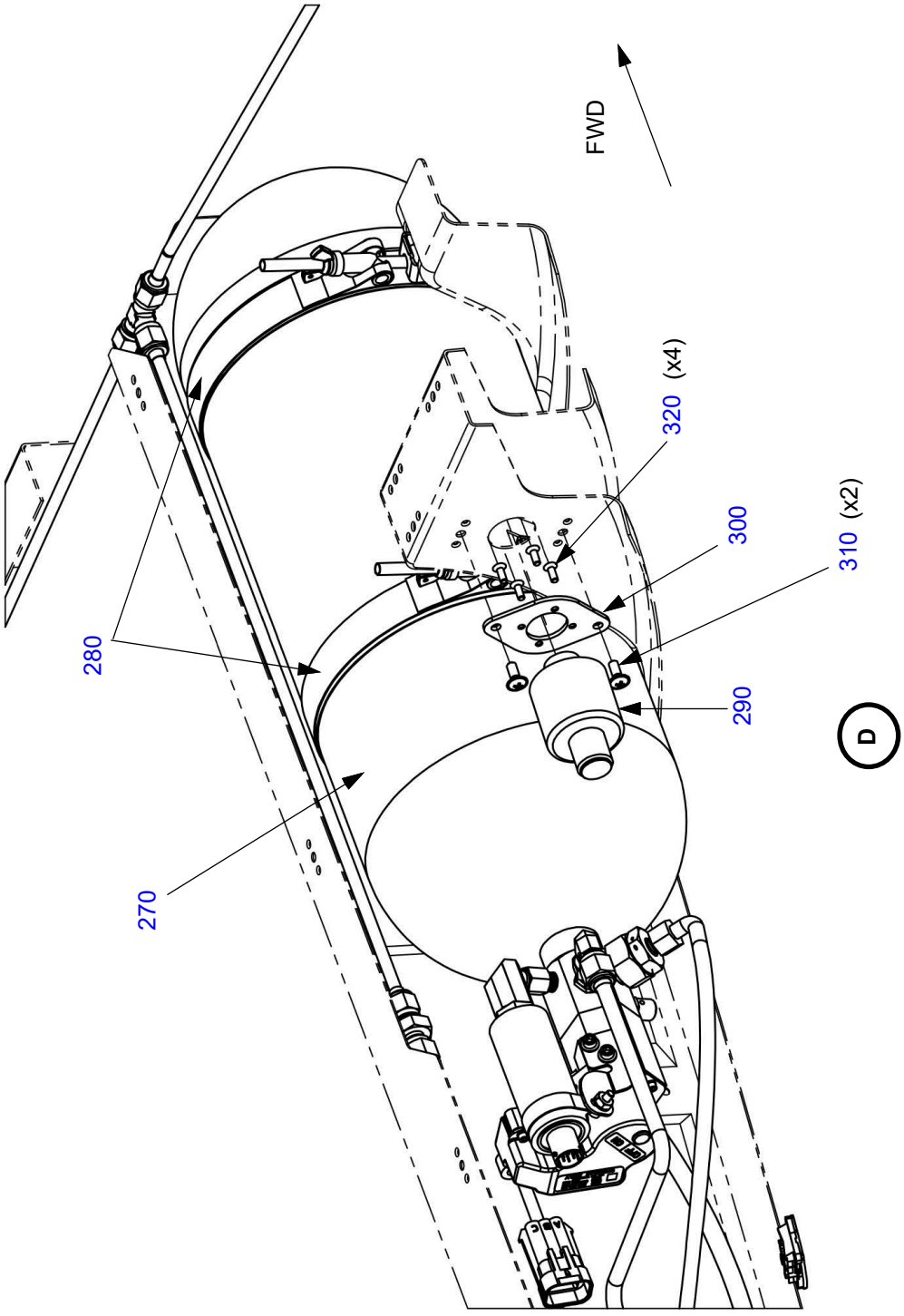

Figure 35-0.2: Oxygen System (SN: K037 and On) (Continued)

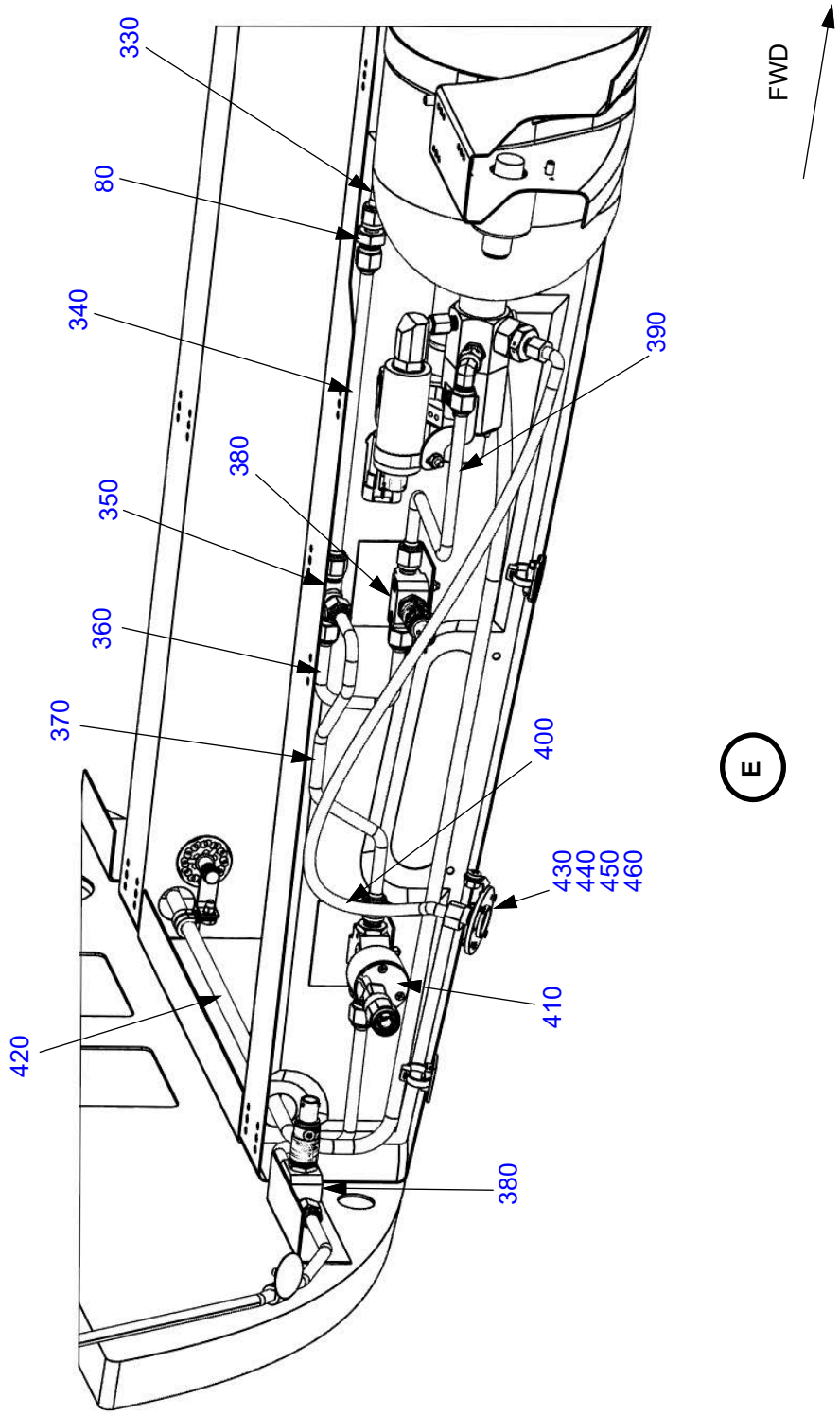

Figure 35-0.2: Oxygen System (SN: K037 and On) (Continued)

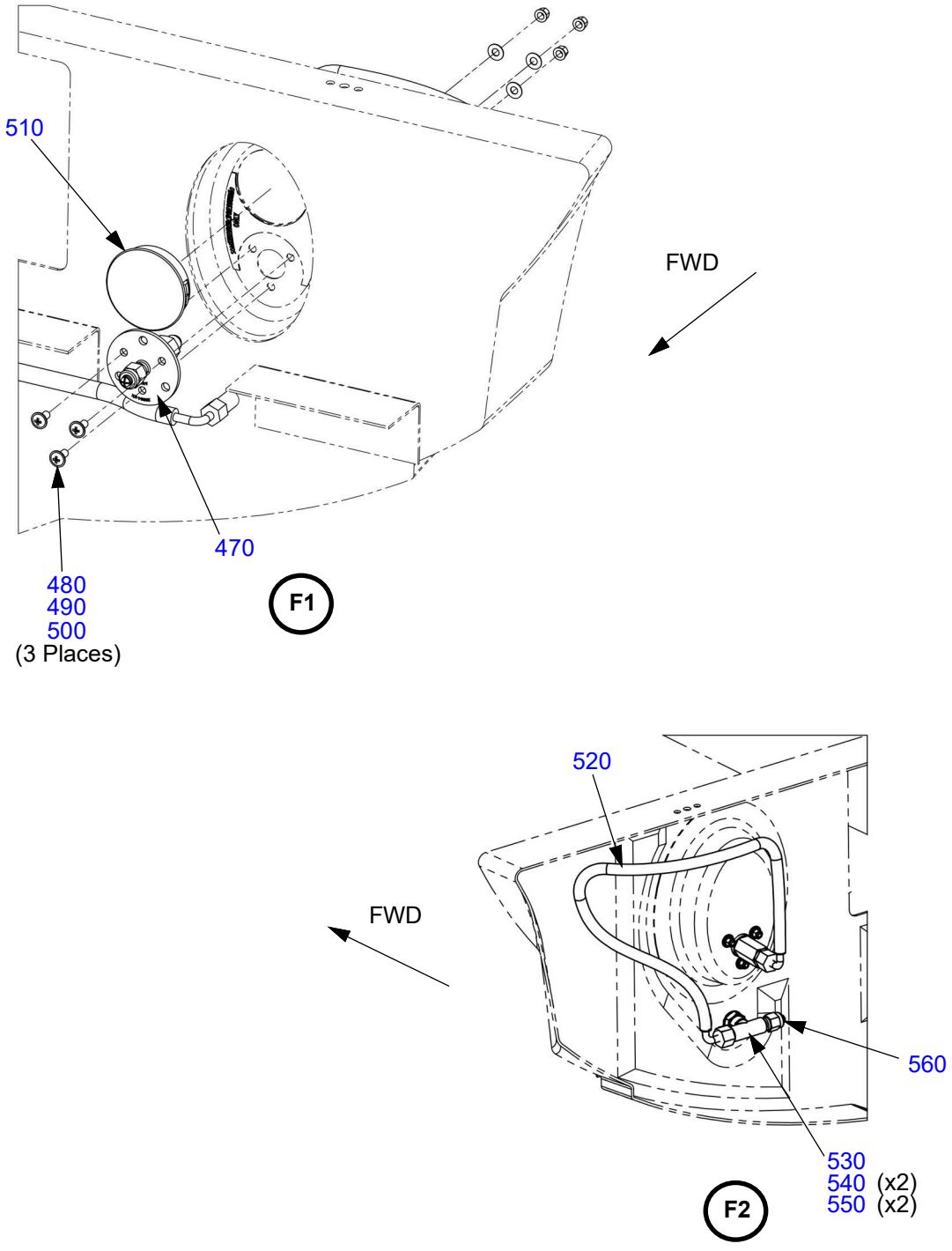

Figure 35-0.2: Oxygen System (SN: K037 and On) (Continued)

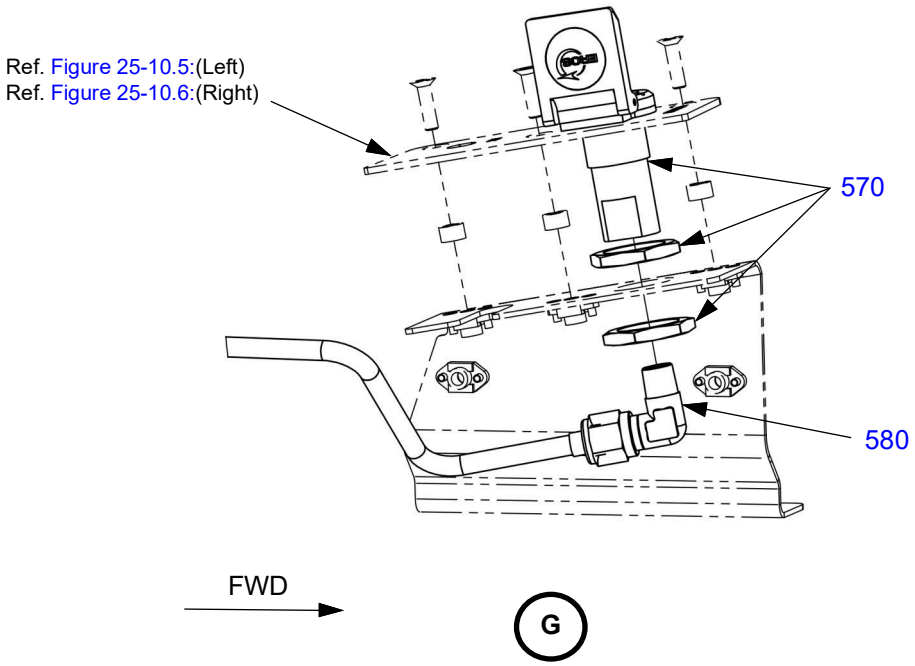

(Right side shown, left side opposite.)

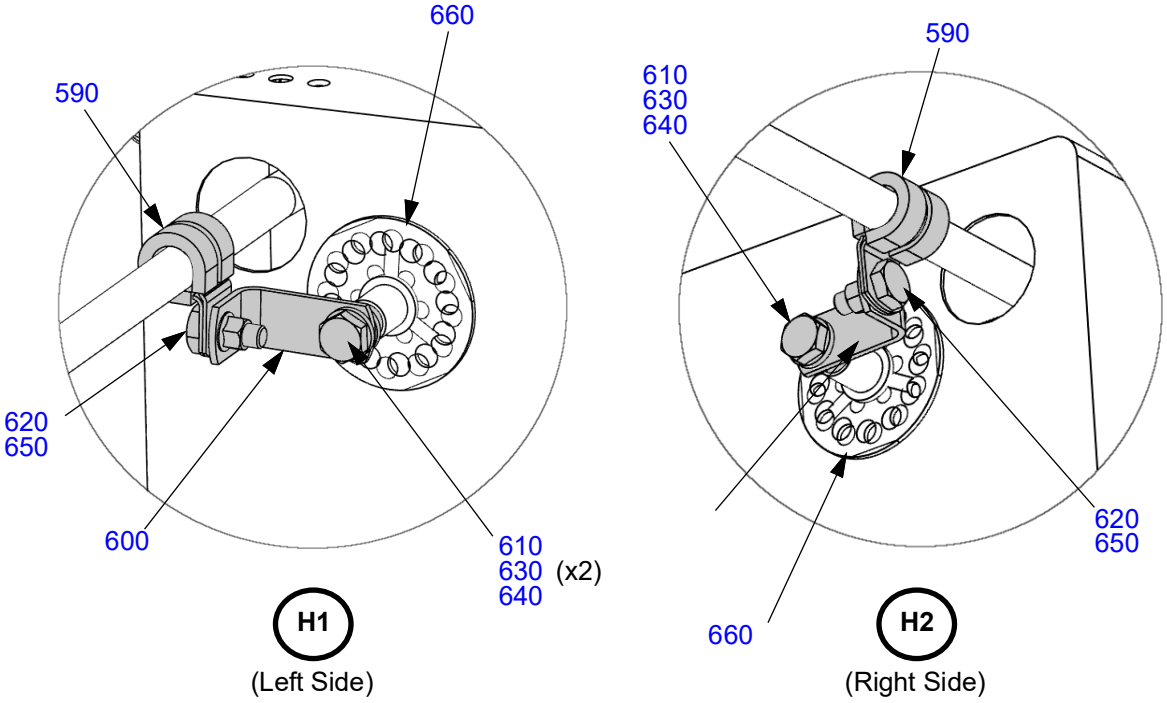

Figure 35-0.2: Oxygen System (SN: K037 and On) (Continued)

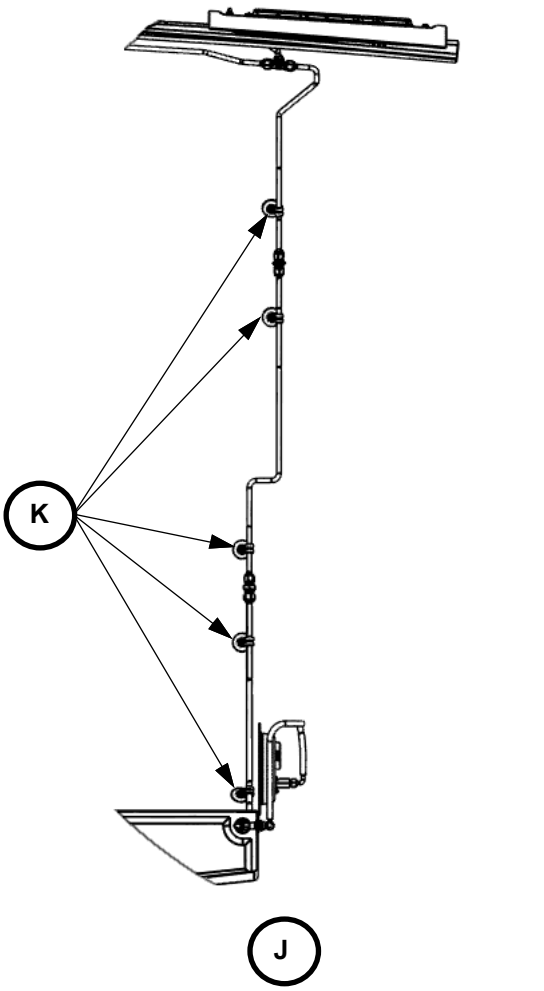

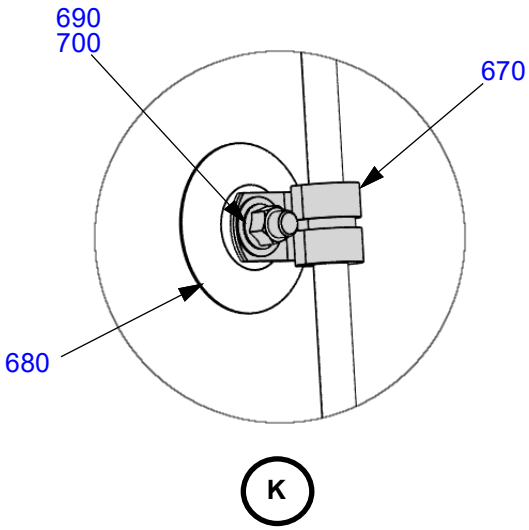

Table 35-0.2: Oxygen System (SN: K037 and On)

Figure Item Number	Part Number	Part Name	Effectivity Code	Amount in Assy.
10	AK35201013	Low Pressure O2 Line, Pax, Union To MDS Fwd	K037 and On	1
20	PK99005407	Union, Flared Tube, .250 Nominal Tube Size, Oxygen System	K037 and On	3
30	AK35201012	Low Pressure O2 Line, Pax, Tee to Union	K037 and On	1
40	PK99005405	Tee, 37 Deg Flare, 1/4" Tube, Oxygen System	K037 and On	2
50	AK35201014	Low Pressure O2 Line, Pax, Tee to MDS Aft	K037 and On	1
60	AK35201011	Low Pressure O2 Line, Pax, Union to Tee	K037 and On	1
70	AK35201010	Low Pressure O2 Line, Pax, Reducer to Union	K037 and On	1
80	PK99005404	Reducer - External Thread Flared Tube, Oxygen System	K037 and On	2
90	AK35201009	Low Pressure O2 Line, Pax, Switch to Reducer	K037 and On	1
100	AK35101007	Low Pressure O2 Line, Crew, LH	K037 and On	1
110	AK35101008	Low Pressure O2 Line, Crew, RH	K037 and On	1
120	AK35101006	Low Pressure O2 Line, Crew, Straight, Fwd	K037 and On	1
130	MD40-40-004	Crew Oxygen Mask - Regulator - Eros/ Zodiac	K037 and On	2
140	MXP155-2	Stowage Cup, Crew Mask, Oxygen - Zodiac	K037 and On	2
150	PK25112007	Bracket, Stowage, Crew O2 Mask, LH	K037 and On	1
160	PK25112008	Bracket, Stowage, Crew O2 Mask, RH	K037 and On	1
170	MS24693-C50	Screw, Machine, C'sunk, Cres Ø .164 x 0.500	K037 and On	4
180	MS24693-C49	Screw, Machine, C'sunk, Cres Ø .164 x 0.437	K037 and On	8
190	MS21042L08	Nut, Self-locking, 450°, Reduced #8-32	K037 and On	8

Figure Item Number	Part Number	Part Name	Effectivity Code	Amount in Assy.
200	NAS1149FN832P	Washer, Flat #8 x .032	K037 and On	8
210	AK35202001	Assy, Bracket, O2 MDS, Fwd	K037 and On	1
220	AK35202002	Assy, Bracket, O2 MDS, Aft	K037 and On	1
230	EN2-421048	MDS Double - Zodiac	K037 and On	2
240	PK35202003	Cover, Antenna Access, O2 MDS Bracket	K037 and On	2
250	MS51957-28	Screw, Pan Head, .138 x .375 Lg., Cres	K037 and On	12
260	MS51957-27	Screw, Pan Head, .138 x .312 Lg., Cres	K037 and On	8
270	806959-03	Cylinder Regulator Assy - Zodiac	K037 and On	1
280	40422-08	Clamp, Band - Zodiac	K037 and On	2
290	10015326	Altitude Switch	K037 and On	1
300	PK35000001	Mount Plate, Altitude Switch	K037 and On	1
310	AN525-10R8	Screw, Washer Head, .190 x .500 Lg.	K037 and On	2
320	MS24693-S26	Screw, Machine, C'sunk Ø .138 x 0.375	K037 and On	4
330	AK35101005	Low Pressure O2 Line, Crew, Straight, Aft	K037 and On	1
340	AK35101001	Low Pressure O2 Line, Crew, Tee To Reducer	K037 and On	1
350	PK99005406	Tee, 37 Deg Flare, 5/16" Tube, Oxygen System	K037 and On	1
360	AK35001002	Low Pressure O2 Line, Switch to Tee	K037 and On	1
370	AK35201001	Low Pressure O2 Line, Pax, Tee to Solenoid	K037 and On	1
380	CMK80-03	Low Pressure Switch - Eros/zodiac	K037 and On	2
390	AK35001001	Low Pressure O2 Line, Regulator to Switch	K037 and On	1
400	3954-04-240-000	High Pressure Flex Line - Zodiac	K037 and On	1
410	AK35100015	Solenoid Valve, Oxygen, Assy With Connector	K037 and On	1
420	3973-03-480-000	High Pressure Flex Line - Zodiac	K037 and On	1
430	171-22	Indicator, Oxygen High Pressure Relief Assy - Zodiac	K037 and On	1

Figure Item Number	Part Number	Part Name	Effectivity Code	Amount in Assy.
440	MS27039-1-05	Screw, Pan Head, .190 x .344 Lg.	K037 and On	1
450	NAS1149F0332P	Washer, Flat #10 x .032	K037 and On	1
460	MS21083N3	Nut, Self-locking, Non-metallic Insert 10-32	K037 and On	1
470	26884-39	Charging Valve Assy - Zodiac	K037 and On	1
480	AN525-832R6	Screw, Washer Head, .164 x .375 Lg.	K037 and On	3
490	NAS1149FN816P	Washer, Flat #8 x .016	K037 and On	3
500	MS21043-08	Nut, Self-locking, 800°, Reduced #8-32	K037 and On	3
510	PK99250001	Locking Panel Plug	K037 and On	1
520	3973-03-140-000	High Pressure Flex Line - Zodiac	K037 and On	1
530	PK99005402	Bulkhead Tee, 37 Deg. Flare, Zodiac, Oxy-gen System	K037 and On	1
540	AN316-6R	Nut, Jam, Hexagon, Cad Steel 3/8-24	K037 and On	2
550	NAS1149F0632P	Washer, Flat 3/8 x .032	K037 and On	2
560	26894-01	Cap and Chain Assembly	K037 and On	1
570	DPB181-06	Crew Outlet, Oxygen, Quick Disconnect - Eros/zodiac	K037 and On	2
580	PK99005403	Elbow, Flared, Tube And Pipe Threads, 90°, Stainless Steel, Oxygen System	K037 and On	2
590	AS21919WDG06	Clamp, Loop Type, Cushioned, Ø .375	K037 and On	2
600	MS9592-054	Bracket, Angle, 90deg, Cres, .190 Bolt	K037 and On	2
610	NAS43DD3-12N	Spacer, Aluminum .214 I.D. x .312 O.D. X .188	K037 and On	2
620	AN3-3A	Bolt, 10-32 x 15/32" Undrilled	K037 and On	2
630	AN3-5A	Bolt, 10-32 x 21/32" Undrilled	K037 and On	2
640	NAS1149F0363P	Washer, Flat #10 x .063	K037 and On	4
650	MS21043-3	Nut, Self-locking, 800°, Reduced #10-32	K037 and On	2

Figure Item Number	Part Number	Part Name	Effectivity Code	Amount in Assy.
660	PK53000015	Bonded Fastener, Machined, 10-32 x 0.550"	K037 and On	2
Alt.	PK99007051	Rotaloc Standoff		
670	AS21919WDG05	Clamp, Loop Type, Cushioned, Ø .313	K037 and On	5
680	CB4000 E 3 CR 8	Stud, Glass Base, .500 Long	K037 and On	5
Alt.	CB4000 E 3 CRA 8			
690	MS21043-3	Nut, Self-locking, 800°, Reduced #10-32	K037 and On	5
700	NAS1149F0316P	Washer, Flat #10 x .016	K037 and On	5

This Page Intentionally Left Blank

CHAPTER 39

Electrical Panels and Multipurpose Components

This Page Intentionally Left Blank

Table of Contents
and
List of Effective Pages

Chapter/Section	Page Number	Effective Date
39-Title	Page 1	03 Apr 2020
39-Title	Page 2	03 Apr 2020
39-LOEP	Page 1	14 Jul 2021
39-LOEP	Page 2	03 Apr 2020
39-TOC	Page 1	14 Jul 2021
39-TOC	Page 2	03 Apr 2020
Instrument and Control Panels		
39-10	Page 1	14 Jul 2021
39-10	Page 2	14 Jul 2021
39-10	Page 3	14 Jul 2021
39-10	Page 4	14 Jul 2021
Electrical and Electronic Junction Boxes		
39-30	Page 1	14 Jul 2021
39-30	Page 2	14 Jul 2021
39-30	Page 3	14 Jul 2021
39-30	Page 4	14 Jul 2021
39-30	Page 5	14 Jul 2021
39-30	Page 6	14 Jul 2021

This Page Intentionally Left Blank

CHAPTER 39

Table of Contents

List of Effective Pages ..... 39-LOEP / Page 1
Table of Contents ..... 39-TOC / Page1

Paragraph **Page Number**

Instrument and Control Panels
Figure 39-10.1: Annunciator Panels ..... 39-10 / Page 1
Table 39-10.1: Annunciator Panels ..... 39-10 / Page 3

Electrical and Electronic Junction Boxes
Figure 39-30.1: Relay Box (SN: K003-K010) ..... 39-30 / Page 1
Table 39-30.1: Relay Box (SN: K003-K010) ..... 39-30 / Page 3
Figure 39-30.2: Relay Box (SN: K011 and On) ..... 39-30 / Page 4
Table 39-30.2: Relay Box (SN: K011 and On) ..... 39-30 / Page 6

This Page Intentionally Left Blank

INSTRUMENT AND CONTROL PANELS

Figure 39-10.1: Annunciator Panels

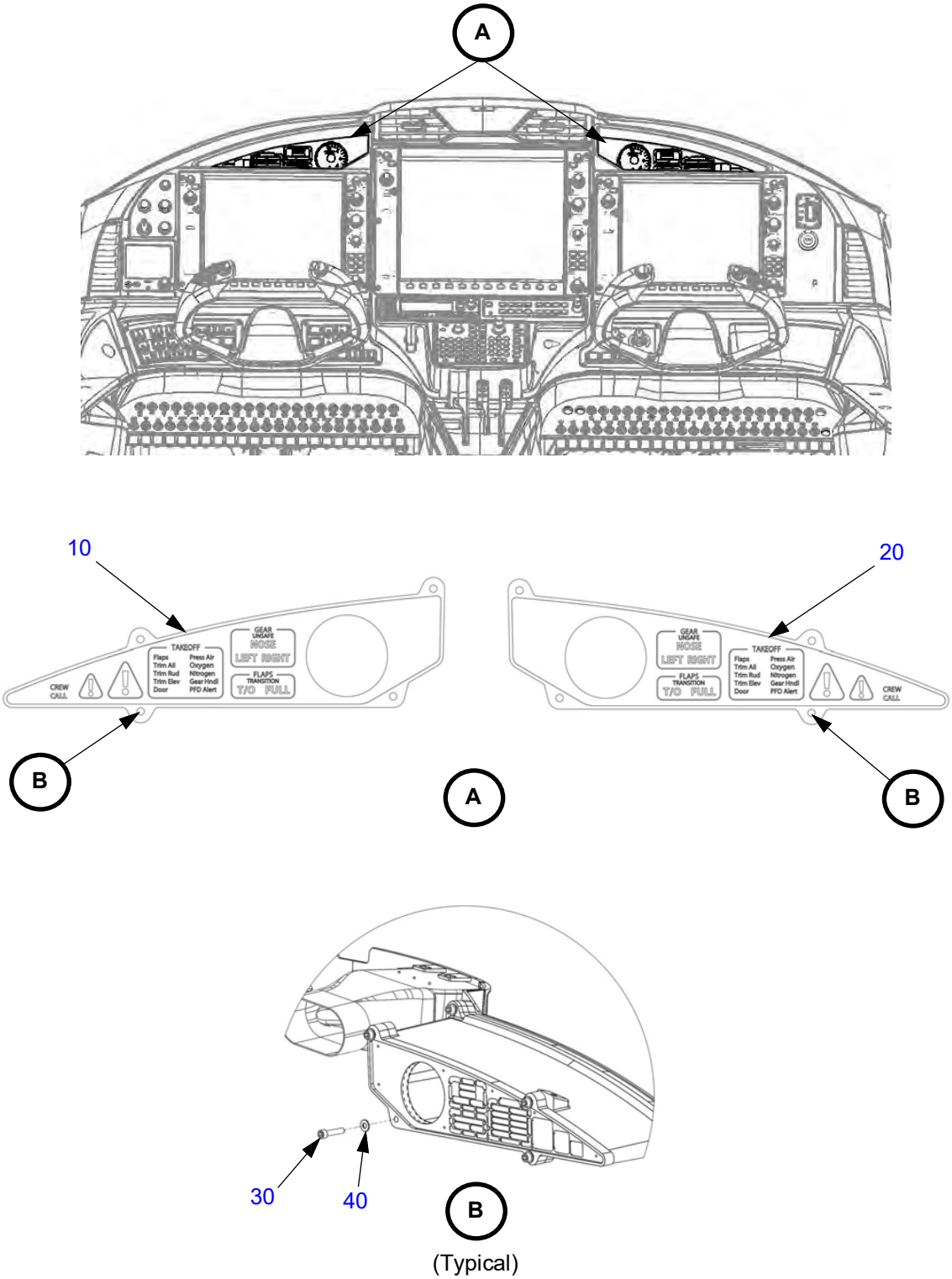

Figure 39-10.1: Annunciator Panels (Continued)

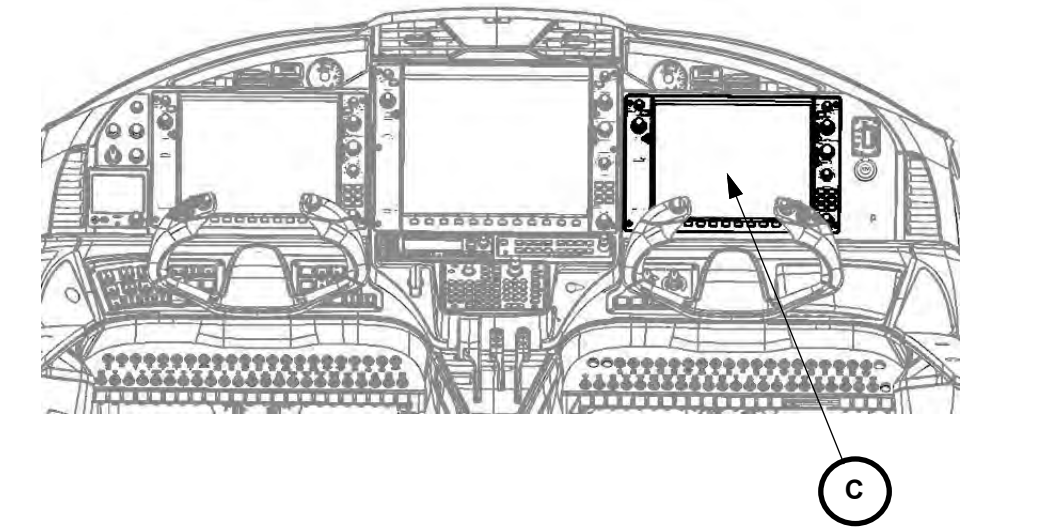

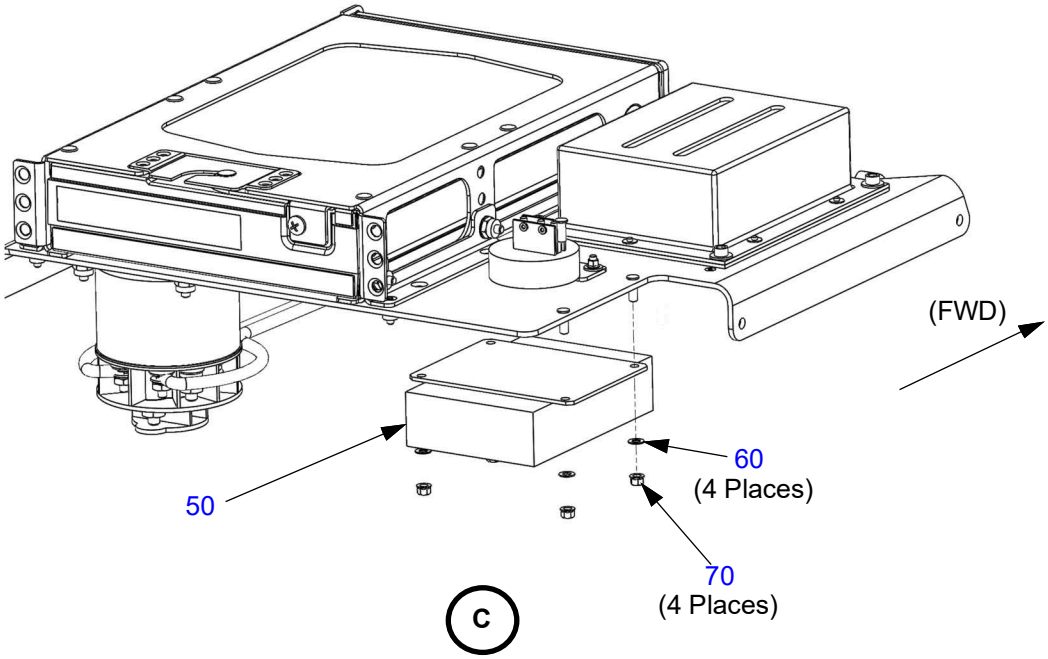

Table 39-10.1: Annunciator Panels

Figure Item Number	Part Number	Part Name	Effectivity Code	Amount in Assy.
10	PK25121011	Subdisplay Wedge, LH, IP	K003 and On	1
20	PK25121010	Subdisplay Wedge, RH, IP	K003 and On	1
30	NAS1352-08-14P	Screw, Socket Head .164-32 x .875	K003 and On	8
40	NAS1149FN816P	Washer, Flat #8 x .016	K003 and On	8
50	LS03-05003-005	Lone Star Aviation: Step Down Converter, 5.0v Output	K003 and On	1
60	NAS620C6	Washer, Reduced OD, Cres, .143 ID x .267 OD	K003 and On	4
70	MS21042L06	Nut, Self-locking, 450°, Reduced #6-32	K003 and On	4

This Page Intentionally Left Blank

ELECTRICAL AND ELECTRONIC JUNCTION BOXES

Figure 39-30.1: Relay Box (SN: K003-K010)

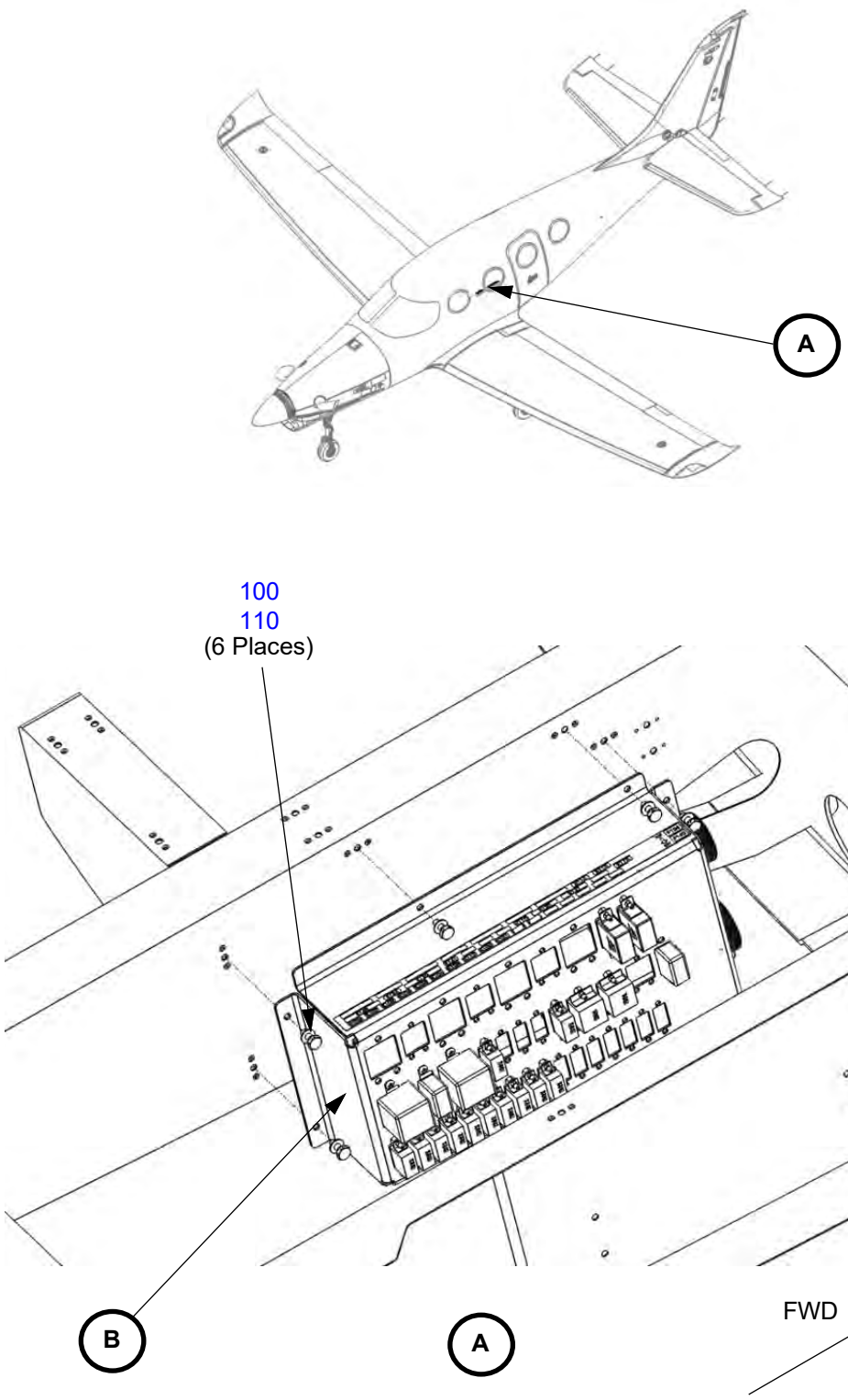

Figure 39-30.1: Relay Box (SN: K003-K010) (Continued)

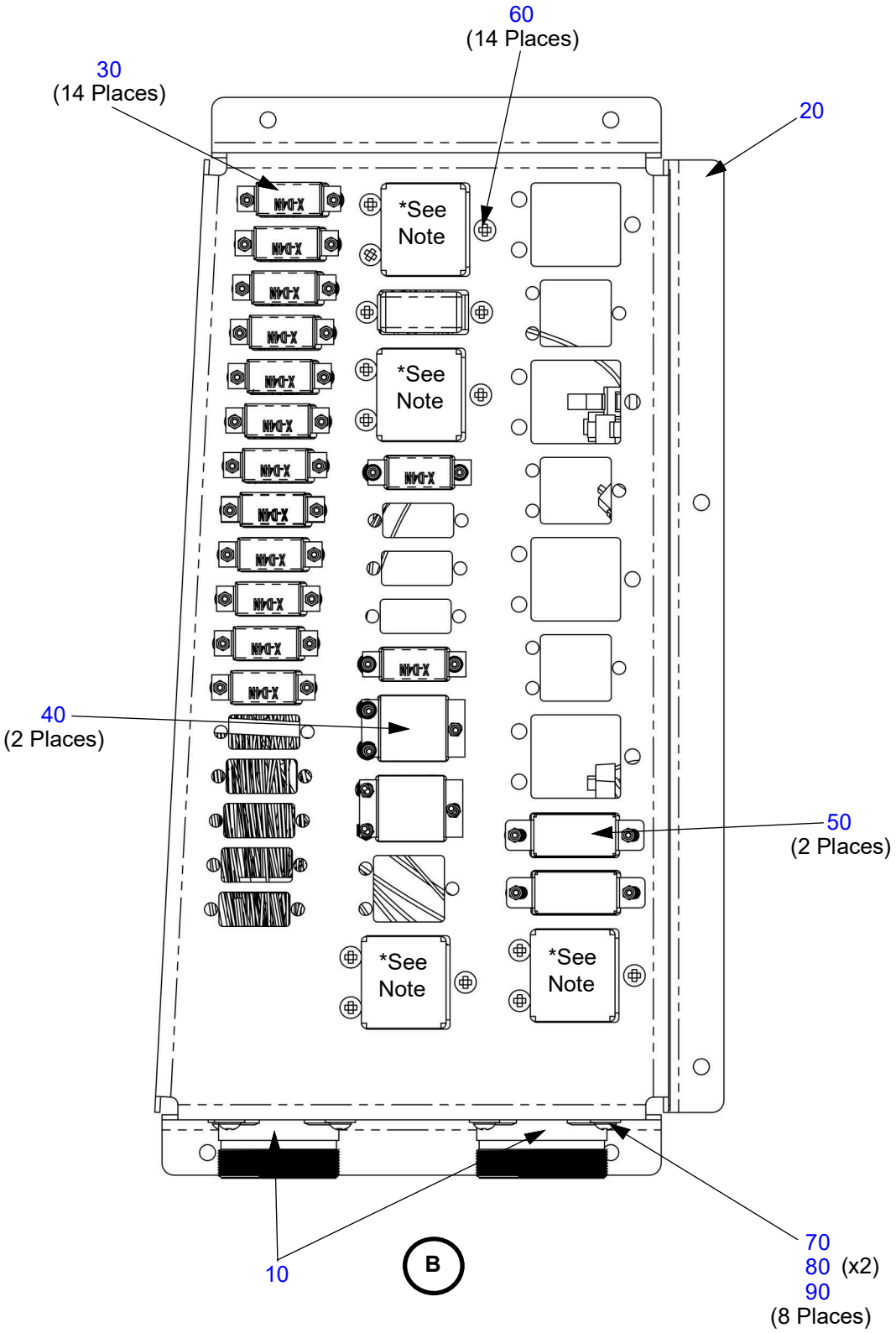

*Note: This item is included with harness, item 10.

Table 39-30.1: Relay Box (SN: K003-K010)

Figure Item Number	Part Number	Part Name	Effectivity Code	Amount in Assy.
10	HK25100022 M	Harness, Relay Box	K003-K010	1
20	PK39300001	Relay Box	K003-K010	1
30	X-D4N-300M	E-M Relay, 2 Form C, DPDT, 5 Amp @ 28VDC	K003-K010	14
40	Y-D4N-300M	Leach Relay	K003-K010	2
50	JC-D4N-300L	Relay, Non-latch, 1PDT, 25 Amp	K003-K010	2
60	MS51957-27	Screw, Pan Head, .138 x .312 Lg., CRES	K003-K010	14
70	MS51957-29	Screw, Pan Head, .138 x .438 Lg., CRES	K003-K010	8
80	NAS1149FN632P	Washer, Flat #6 x .032	K003-K010	16
90	MS21083N06	Nut, Self-locking, Non-metallic Insert .138-32	K003-K010	8
100	AN3-4A	Bolt, 10-32 x 17/32" Undrilled	K003-K010	6
110	NAS1149F0332P	Washer, Flat #10 x .032	K003-K010	6

Figure 39-30.2: Relay Box (SN: K011 and On)

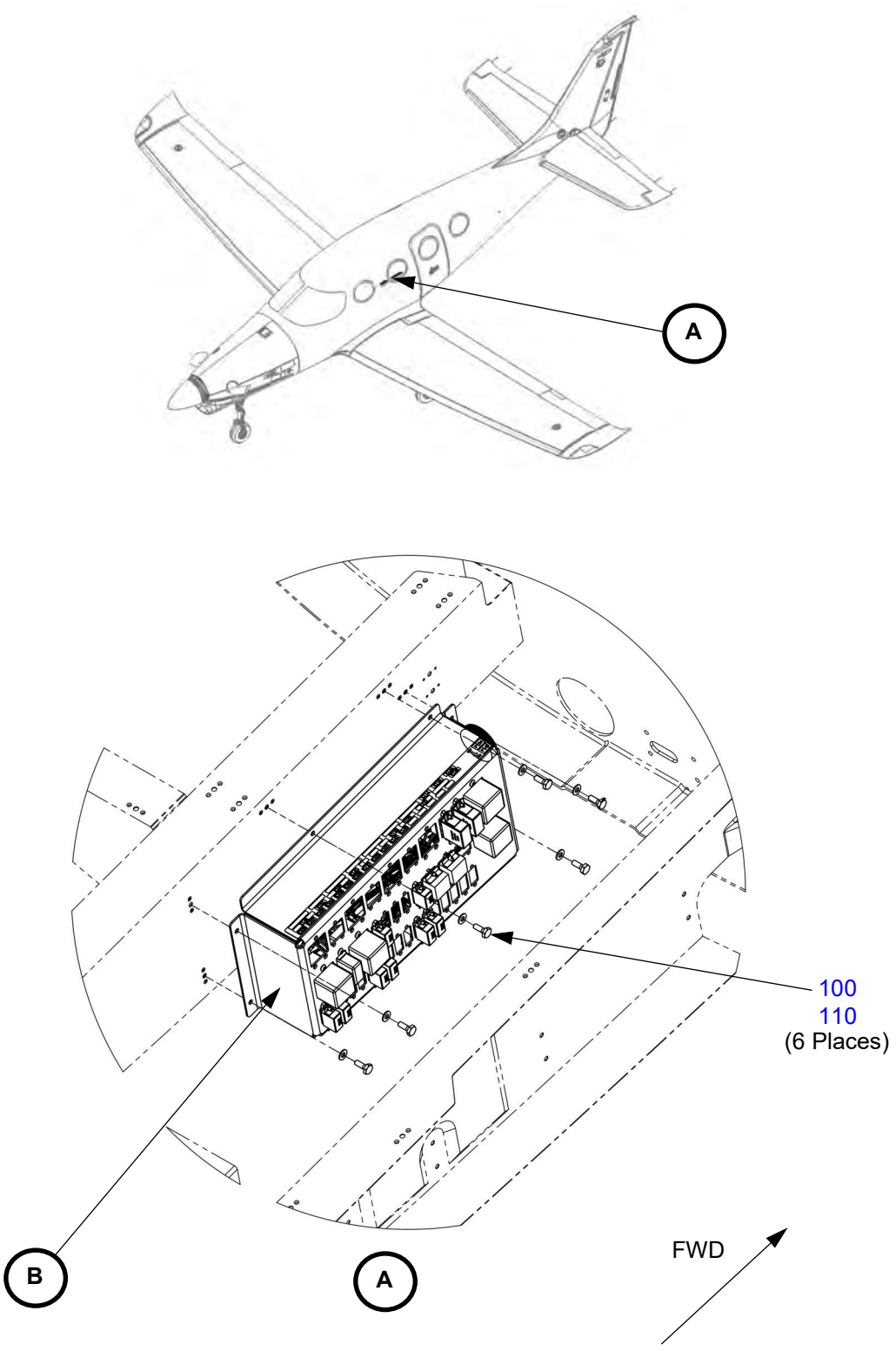

Figure 39-30.2: Relay Box (SN: K011 and On) (Continued)

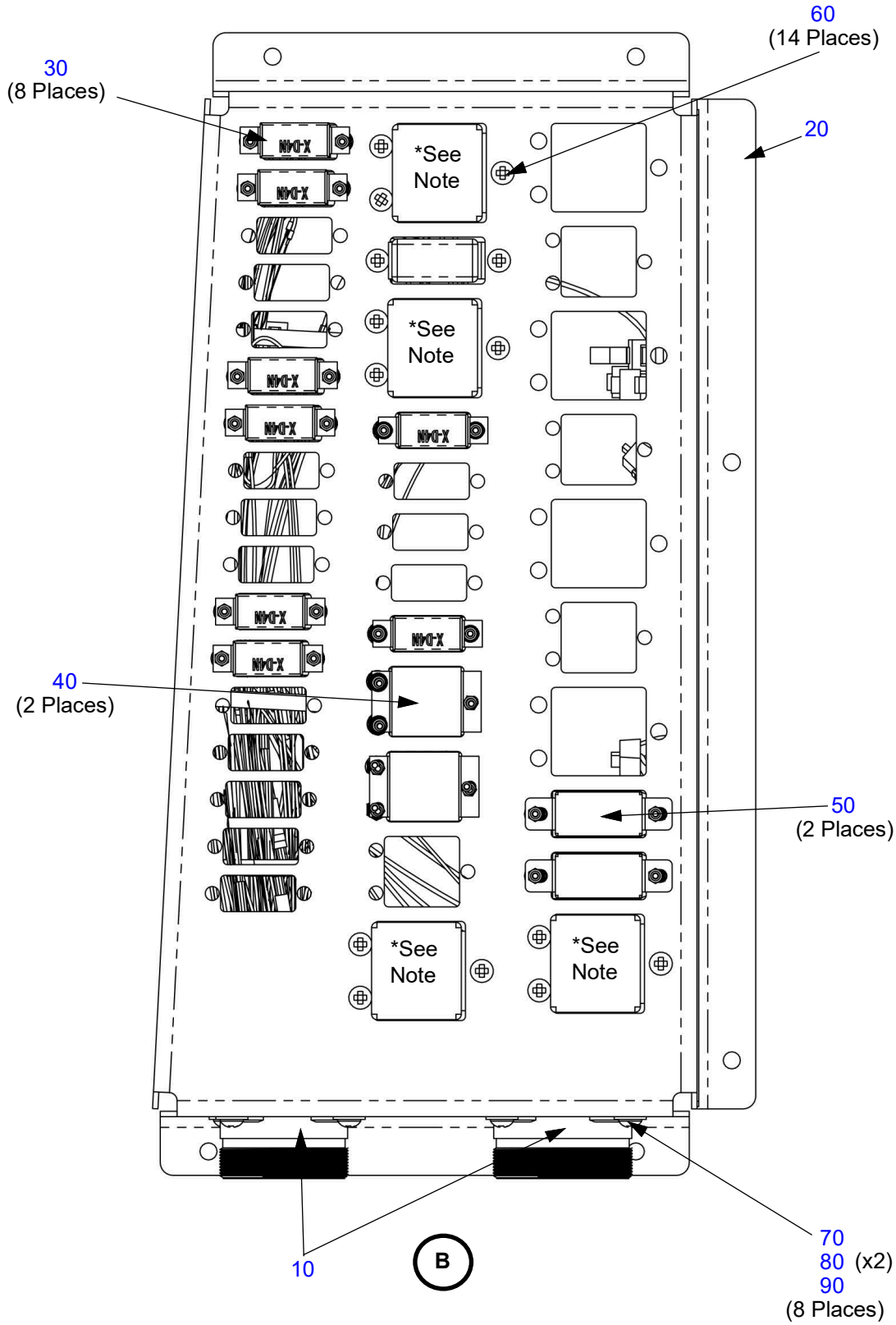

*Note: This item is included with harness, item 10.

Table 39-30.2: Relay Box (SN: K011 and On)

Figure Item Number	Part Number	Part Name	Effectivity Code	Amount in Assy.
10	HK25102022	Harness, Relay Box	K011 and On*	1
20	PK39300001	Relay Box	K011 and On*	1
30	X-D4N-300M	E-M Relay, 2 Form C, DPDT, 5 Amp @ 28VDC	K011 and On*	8
40	Y-D4N-300M	Leach Relay	K011 and On*	2
50	JC-D4N-300L	Relay, Non-latch, 1PDT, 25 Amp	K011 and On*	2
60	MS51957-27	Screw, Pan Head, .138 x .312 Lg., CRES	K011 and On*	14
70	MS51957-29	Screw, Pan Head, .138 x .438 Lg., CRES	K011 and On*	8
80	NAS1149FN632P	Washer, Flat #6 x .032	K011 and On*	16
90	MS21083N06	Nut, Self-locking, Non-metallic Insert .138-32	K011 and On*	8
100	AN3-4A	Bolt, 10-32 x 17/32" Undrilled	K011 and On*	6
110	NAS1149F0332P	Washer, Flat #10 x .032	K011 and On*	6

* (Also SN:K003-K010 with SB-0017)

CHAPTER 52

Doors

This Page Intentionally Left Blank

Table of Contents
and
List of Effective Pages

Chapter/Section	Page Number	Effective Date
52-Title	Page 1	03 Apr 2020
52-Title	Page 2	03 Apr 2020
52-LOEP	Page 1	26 Mar 2024
52-LOEP	Page 2	26 Mar 2024
52-TOC	Page 1	03 Apr 2020
52-TOC	Page 2	03 Apr 2020
Passenger/Crew Door		
52-10	Page 1	03 Apr 2020
52-10	Page 2	03 Apr 2020
52-10	Page 3	03 Apr 2020
52-10	Page 4	03 Apr 2020
52-10	Page 5	03 Apr 2020
52-10	Page 6	03 Apr 2020
52-10	Page 7	03 Apr 2020
52-10	Page 8	03 Apr 2020
52-10	Page 9	03 Apr 2020
52-10	Page 10	03 Apr 2020
52-10	Page 11	03 Apr 2020
52-10	Page 12	03 Apr 2020
52-10	Page 13	03 Apr 2020
52-10	Page 14	03 Apr 2020
52-10	Page 15	03 Apr 2020
52-10	Page 16	03 Apr 2020
52-10	Page 17	03 Apr 2020
52-10	Page 18	26 Mar 2024
52-10	Page 19	26 Mar 2024
52-10	Page 20	03 Apr 2020
52-10	Page 21	03 Apr 2020
52-10	Page 22	14 Jul 2021
52-10	Page 23	03 Apr 2020
52-10	Page 24	03 Apr 2020
52-10	Page 25	03 Apr 2020
52-10	Page 26	03 Apr 2020
52-10	Page 27	03 Apr 2020
52-10	Page 28	03 Apr 2020
52-10	Page 29	03 Apr 2020
52-10	Page 30	14 Jul 2021

52-10 ..... Page 31 ..... 03 Apr 2020
52-10 ..... Page 32 ..... 03 Apr 2020
52-10 ..... Page 33 ..... 03 Apr 2020
52-10 ..... Page 34 ..... 03 Apr 2020
52-10 ..... Page 35 ..... 03 Apr 2020
52-10 ..... Page 36 ..... 03 Apr 2020
52-10 ..... Page 37 ..... 03 Apr 2020
52-10 ..... Page 38 ..... 03 Apr 2020
52-10 ..... Page 39 ..... 03 Apr 2020
52-10 ..... Page 40 ..... 03 Apr 2020
52-10 ..... Page 41 ..... 03 Apr 2020
52-10 ..... Page 42 ..... 03 Apr 2020
52-10 ..... Page 43 ..... 03 Apr 2020
52-10 ..... Page 44 ..... 03 Apr 2020
52-10 ..... Page 45 ..... 03 Apr 2020
52-10 ..... Page 46 ..... 14 Jul 2021
52-10 ..... Page 47 ..... 26 Mar 2024
52-10 ..... Page 48 ..... 26 Mar 2024
52-10 ..... Page 49 ..... 26 Mar 2024
52-10 ..... Page 50 ..... 26 Mar 2024
52-10 ..... Page 51 ..... 26 Mar 2024
52-10 ..... Page 52 ..... 26 Mar 2024
2-10 ..... Page 53 ..... 26 Mar 2024
52-10 ..... Page 54 ..... 26 Mar 2024
52-10 ..... Page 55 ..... 26 Mar 2024
52-10 ..... Page 56 ..... 26 Mar 2024
52-10 ..... Page 57 ..... 26 Mar 2024
52-10 ..... Page 58 ..... 26 Mar 2024

Emergency Door

52-20 ..... Page 1 ..... 03 Apr 2020
52-20 ..... Page 2 ..... 14 Jul 2021
52-20 ..... Page 3 ..... 14 Jul 2021
52-20 ..... Page 4 ..... 03 Apr 2020

CHAPTER 52

Table of Contents

List of Effective Pages ..... 52-LOEP / Page 1
Table of Contents ..... 52-TOC / Page1

Paragraph **Page Number**

Passenger/Crew Door

Figure 52-10.1: Gas Strut and Cable Attachment ..... 52-10 / Page 1
Table 52-10.1: Gas Strut and Cable Attachment ..... 52-10 / Page 4
Figure 52-10.2: Gas Strut and Cable Attachment Brackets ..... 52-10 / Page 5
Table 52-10.2: Gas Strut and Cable Attachment Brackets ..... 52-10 / Page 6
Figure 52-10.3: Door to Fuselage Attachment ..... 52-10 / Page 7
Table 52-10.3: Door to Fuselage Attachment ..... 52-10 / Page 8
Figure 52-10.4: Cabin Door Microswitches ..... 52-10 / Page 9
Table 52-10.4: Cabin Door Microswitches ..... 52-10 / Page 11
Figure 52-10.5: Pin Plates ..... 52-10 / Page 12
Table 52-10.5: Pin Plates ..... 52-10 / Page 15
Figure 52-10.6: Door Steps ..... 52-10 / Page 16
Table 52-10.6: Door Steps ..... 52-10 / Page 17
Figure 52-10.7: Door Finish Panels ..... 52-10 / Page 18
Table 52-10.7: Door Finish Panels ..... 52-10 / Page 19
Figure 52-10.8: Latch Assembly Pins ..... 52-10 / Page 20
Table 52-10.8: Latch Assembly Pins ..... 52-10 / Page 29
Figure 52-10.9: Door Locking Mechanism Attachment ..... 52-10 / Page 31
Table 52-10.9: Door Locking Mechanism Attachment ..... 52-10 / Page 32
Figure 52-10.10: Door Latches ..... 52-10 / Page 33
Table 52-10.10: Door Latches ..... 52-10 / Page 43
Figure 52-10.11: Door Seal System ..... 52-10 / Page 45
Table 52-10.11: Door Seal System ..... 52-10 / Page 52
Figure 52-10.12: Door Handle ..... 52-10 / Page 55
Table 52-10.12: Door Handle ..... 52-10 / Page 55
Figure 52-10.13: Door Handle Mechanism ..... 52-10 / Page 56
Table 52-10.13: Door Handle Mechanism ..... 52-10 / Page 57

Emergency Door

Figure 52-20.1: Emergency Exit Door ..... 52-20 / Page 1
Table 52-20.1: Emergency Exit Door ..... 52-20 / Page 4

This Page Intentionally Left Blank

PASSENGER/CREW DOOR

Figure 52-10.1: Gas Strut and Cable Attachment

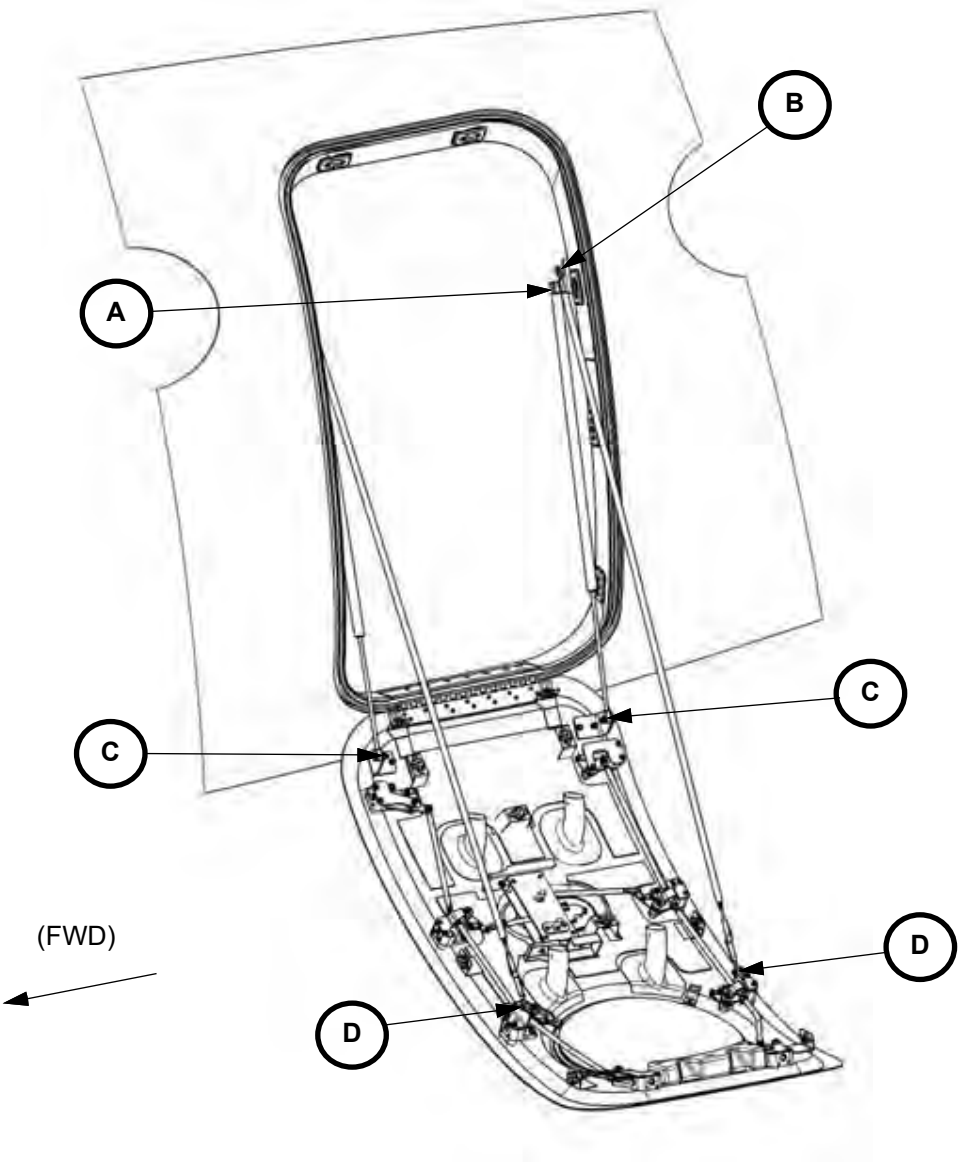

Figure 52-10.1: Gas Strut and Cable Attachment (Continued)

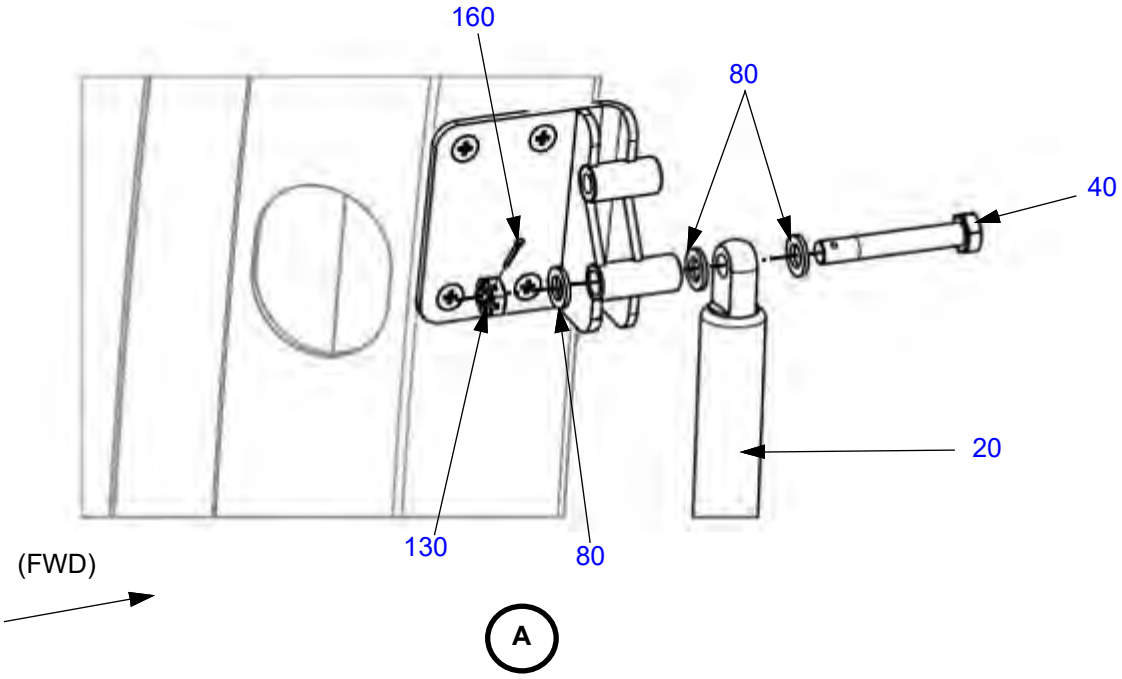

(Aft side shown, forward side opposite.)

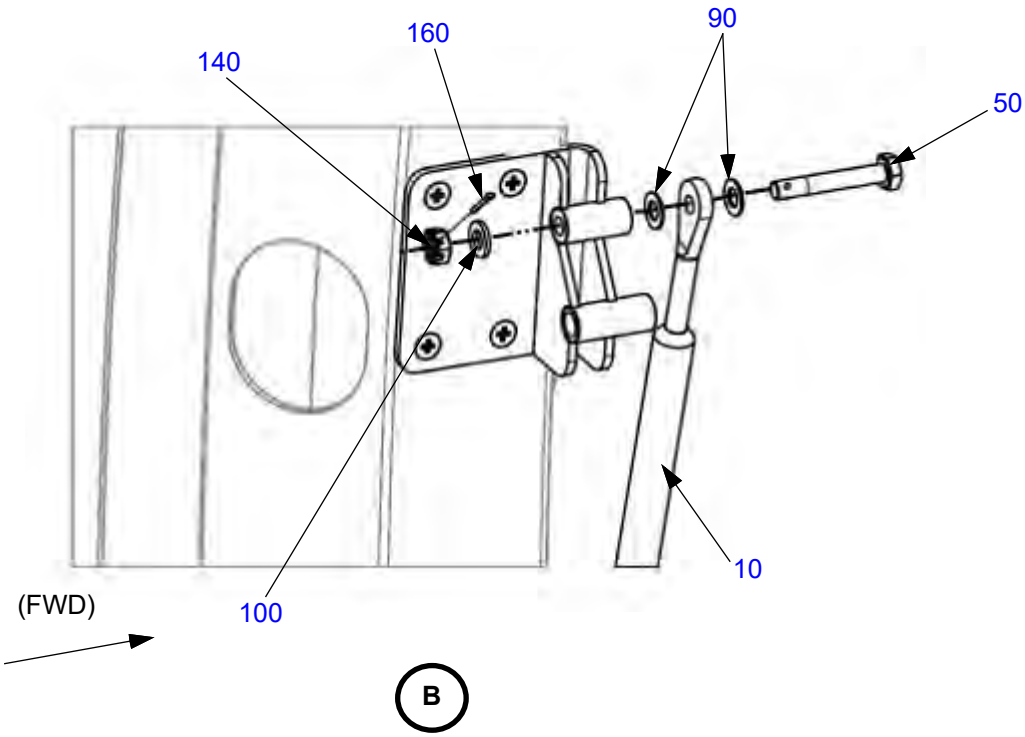

(Aft side shown, forward side opposite.)

Figure 52-10.1: Gas Strut and Cable Attachment (Continued)

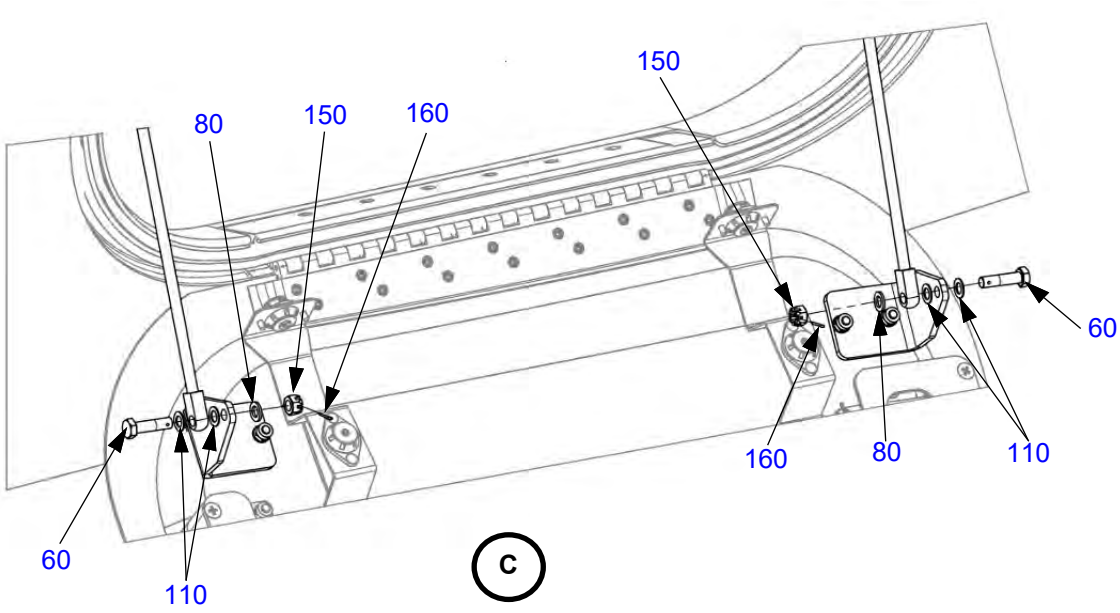

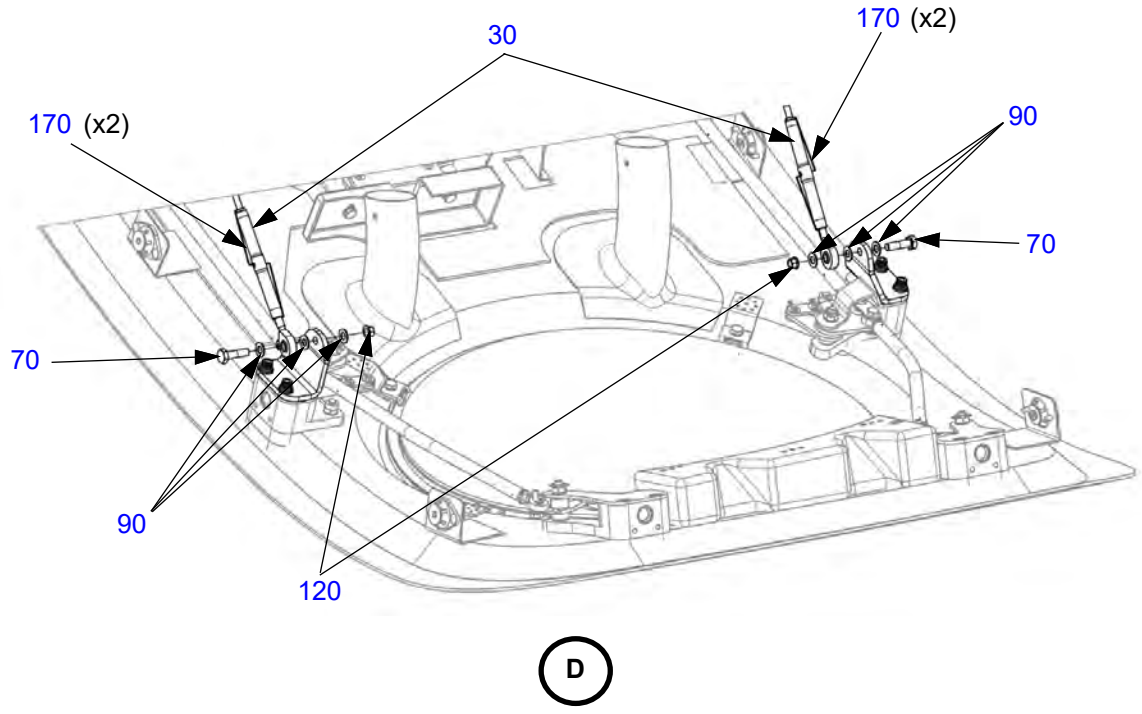

Table 52-10.1: Gas Strut and Cable Attachment

Figure Item Number	Part Number	Part Name	Effectivity Code	Amount in Assy.
10	AK52340000	Assembly, Tension Cable, Door	K003 and On	2
20	PK99007113	Strut, Gas, Cabin Door, Bansbach	K003 and On	2
30	MS21251-B5S	Turnbuckle, Brass, Short 1/4-28 Thread	K003 and On	2
40	AN5-20	Bolt, 5/16-24 x 2-3/32" Drilled Shank	K003 and On	2
50	AN4-15	Bolt, 1/4-28 x 1-21/32" Drilled Shank	K003 and On	2
60	AN5-11	Bolt, 5/16-24 x 1-7/32" Drilled Shank	K003 and On	2
70	AN4-7A	Bolt, 1/4-28 x 29/32" Undrilled	K003 and On	2
80	NAS1149F0563P	Washer, Flat 5/16 x .063	K003 and On	6
90	NAS1149F0432P	Washer, Flat 1/4 x .032	K003 and On	2
100	NAS1149F0463P	Washer, Flat 1/4 x .063	K003 and On	4
110	NAS1149F0532P	Washer, Flat 5/16 x .063	K003 and On	8
120	MS21042L4	Nut, Self-locking, 450°, Reduced 1/4-28	K003 and On	2
130	AN320-5	Nut, Castellated, Shear, Steel 5/16-24	K003 and On	2
140	AN320-4	Nut, Castellated, Shear, Steel 1/4-28	K003 and On	2
150	AN310-5	Nut, Castellated, Steel 5/16-24	K003 and On	2
160	MS24665-132	Pin, Cotter, Cad Steel Ø .062 x .50	K003 and On	6
170	MS21256-1	Clip, Locking, Turnbuckle	K003 and On	4

Figure 52-10.2: Gas Strut and Cable Attachment Brackets

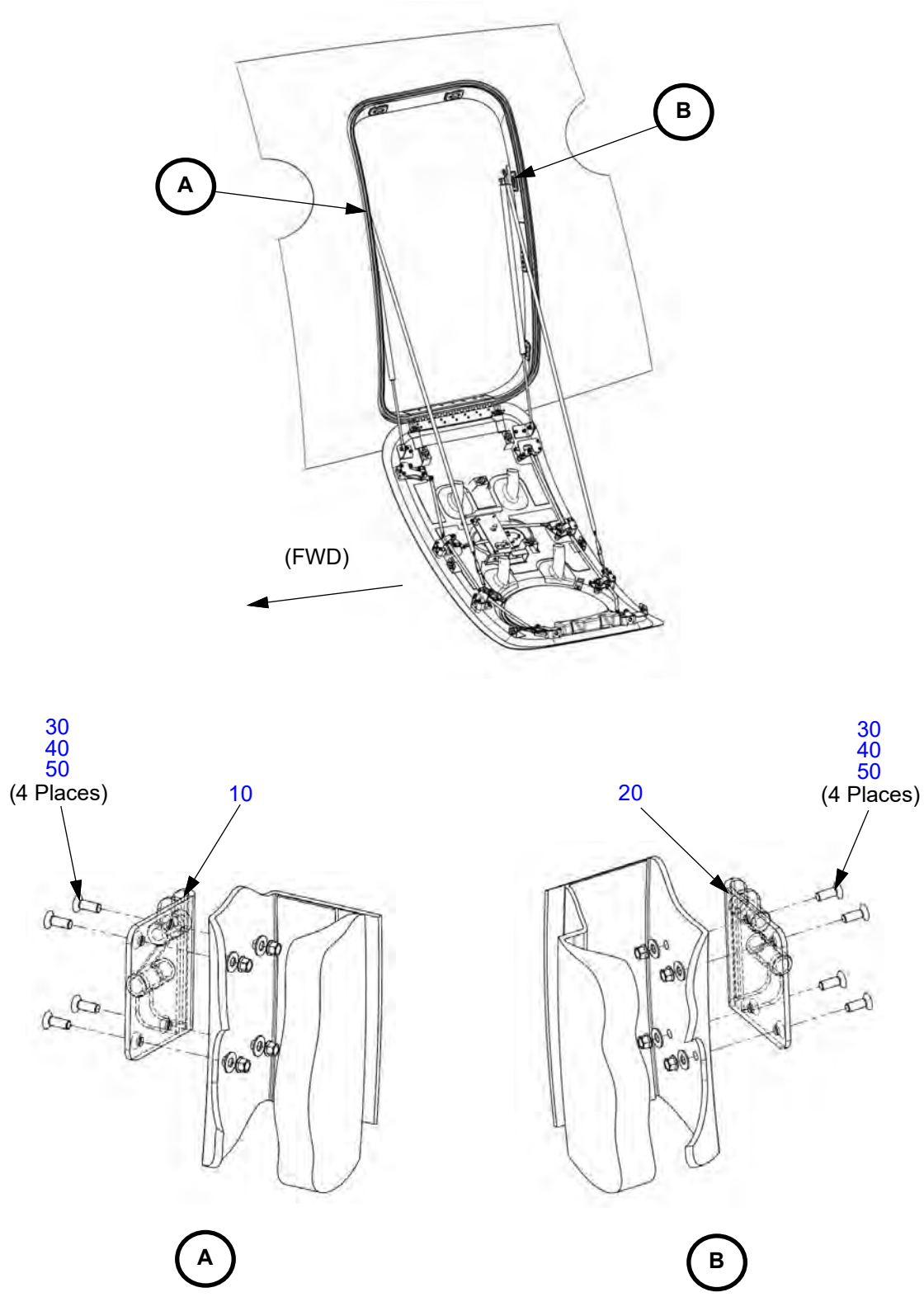

Table 52-10.2: Gas Strut and Cable Attachment Brackets

Figure Item Number	Part Number	Part Name	Effectivity Code	Amount in Assy.
10	AK52310000	Weldment, Strut Bracket, Door, Fwd	K003 and On	1
20	AK52320000	Weldment, Strut Bracket, Door, Aft	K003 and On	1
30	MS24694-S50	Screw, Machine, C'sunk Ø .190 x 17/32	K003 and On	8
40	NAS1149F0332P	Washer, Flat #10 x .032	K003 and On	8
50	MS21042L3	Nut, Self-locking, 450°, Reduced #10-32	K003 and On	8

Figure 52-10.3: Door to Fuselage Attachment

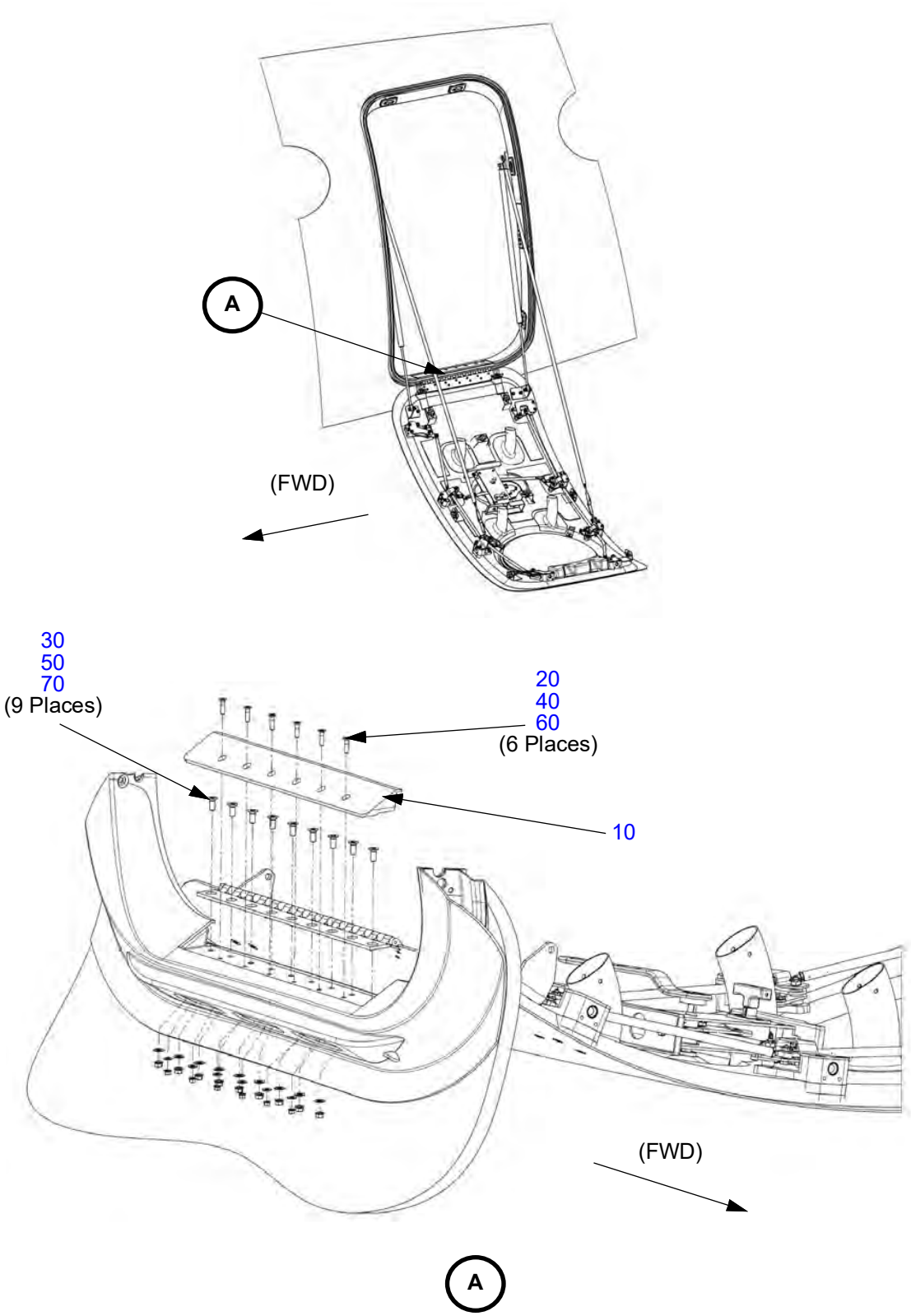

Table 52-10.3: Door to Fuselage Attachment

Figure Item Number	Part Number	Part Name	Effectivity Code	Amount in Assy.
10	PK52300005	Sill, Door, Entry	K003 and On	1
20	MS24694-S53	Screw, Machine, C'sunk Ø .190 x 23/32	K003 and On	6
30	MS24694-S96	Screw, Machine, C'sunk Ø .250 x 19/32	K003 and On	9
40	NAS1149F0332P	Washer, Flat #10 x .032	K003 and On	6
50	NAS1149F0432P	Washer, Flat 1/4 x .032	K003 and On	9
60	MS21042L3	Nut, Self-locking, 450°, Reduced #10-32	K003 and On	6
70	MS21042L4	Nut, Self-locking, 450°, Reduced 1/4-28	K003 and On	9

Figure 52-10.4: Cabin Door Microswitches

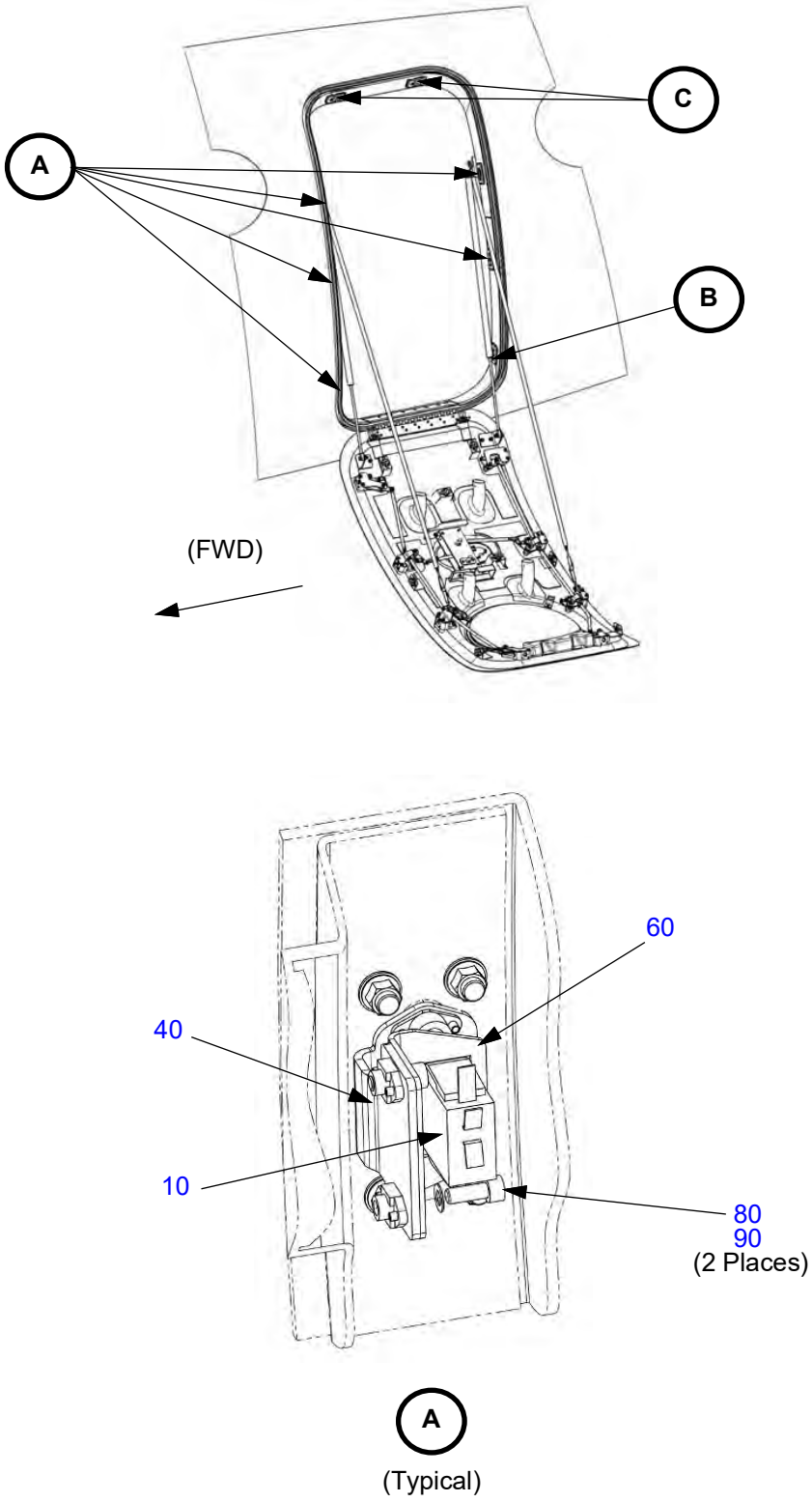

Figure 52-10.4: Cabin Door Microswitches (Continued)

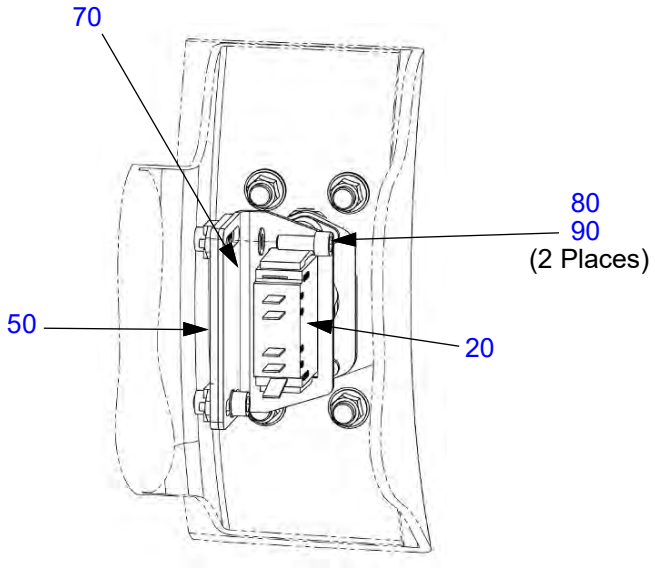

B

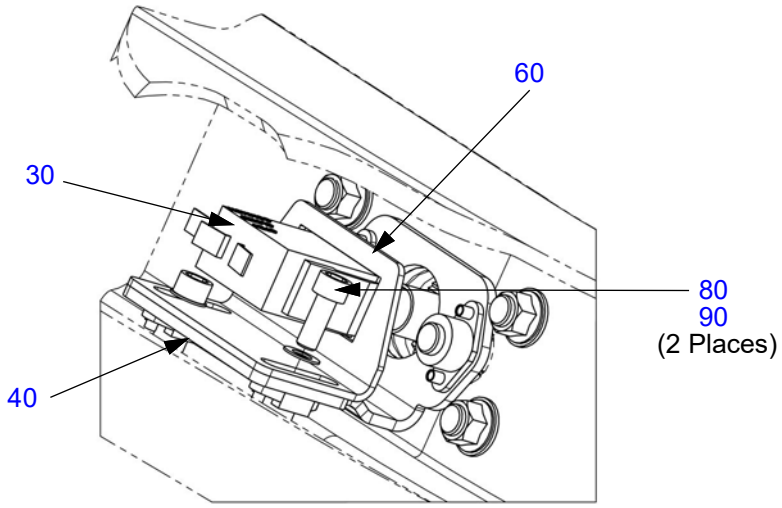

C

(Typical)

Table 52-10.4: Cabin Door Microswitches

Figure Item Number	Part Number	Part Name	Effectivity Code	Amount in Assy.
10	1DM152	Micro Switch, Convex Plunger, Single-pole, Honeywell	K003 and On	1
20	2DM1	Micro Switch, Convex Plunger, Two-pole, Honeywell	K003 and On	5
30	AK52330004	Assy, Micro Switch Extension, Door Pin	K003 and On	2
40	AK52330000	Assy, Backing Plate, Door Pin	K003 and On	7
50	AK52330003	Assy, Backing Plate, Step Light & Door Pin	K003 and On	1
60	PK52330005	Switch Plate, Door Pin	K003 and On	7
70	PK52330007	Switch Plate, Step Light & Door Pin	K003 and On	1
80	NAS1352-08-7P	Screw, Socket Head .164-32 x .438	K003 and On	16
90	NAS620C8	Washer, Reduced OD, CRES, .169 ID x .304 OD	K003 and On	16

Figure 52-10.5: Pin Plates

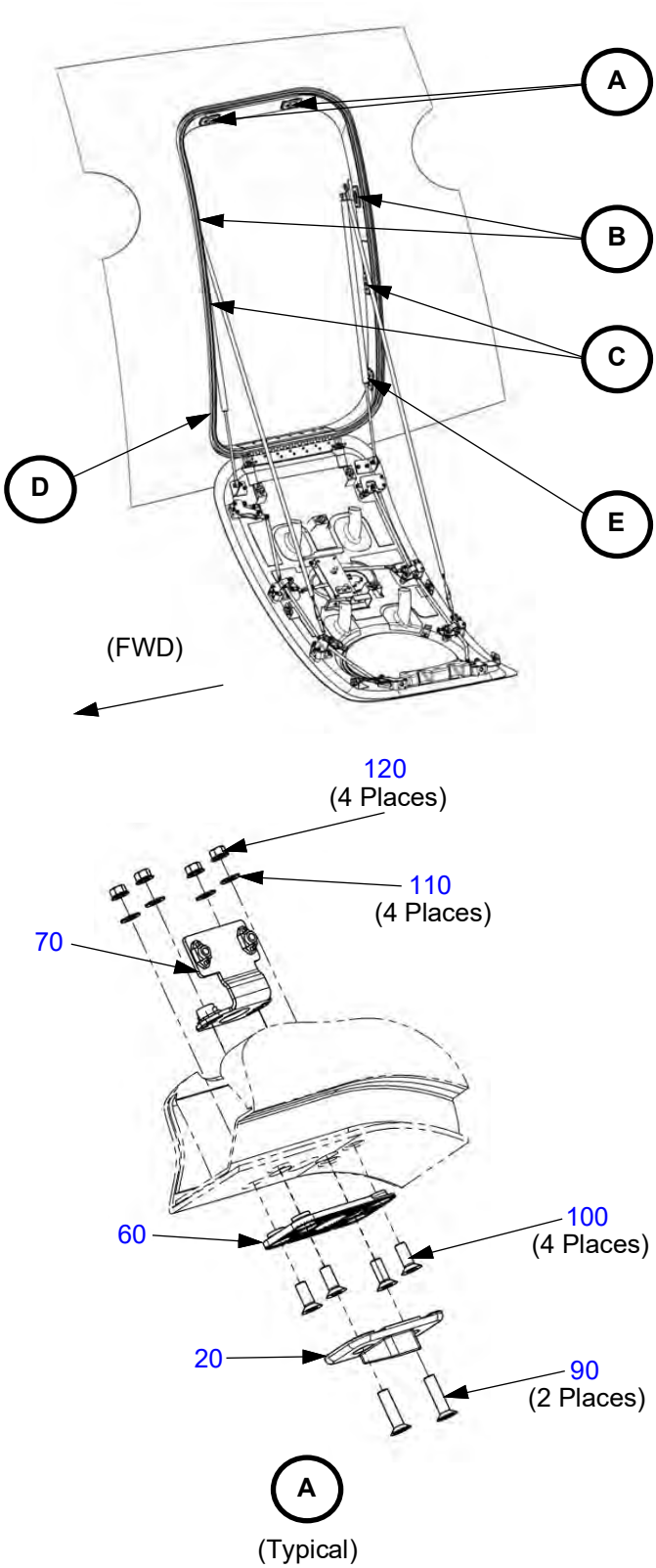

Figure 52-10.5: Pin Plates (Continued)

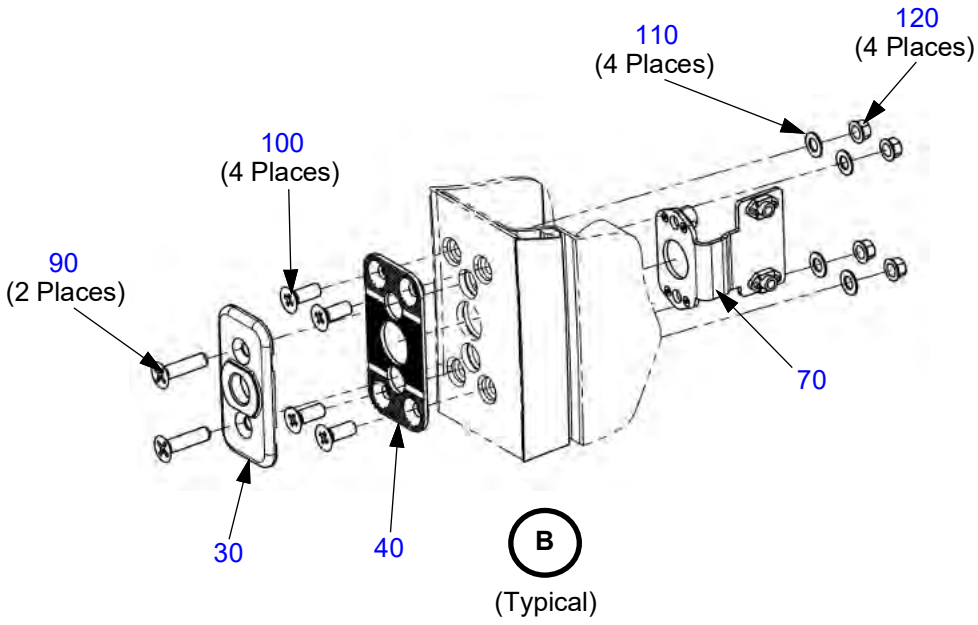

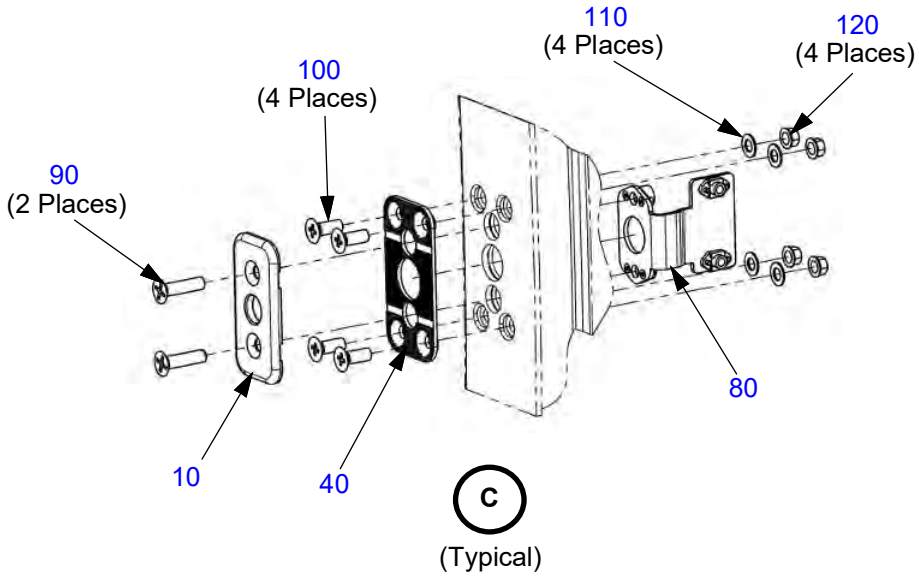

Figure 52-10.5: Pin Plates (Continued)

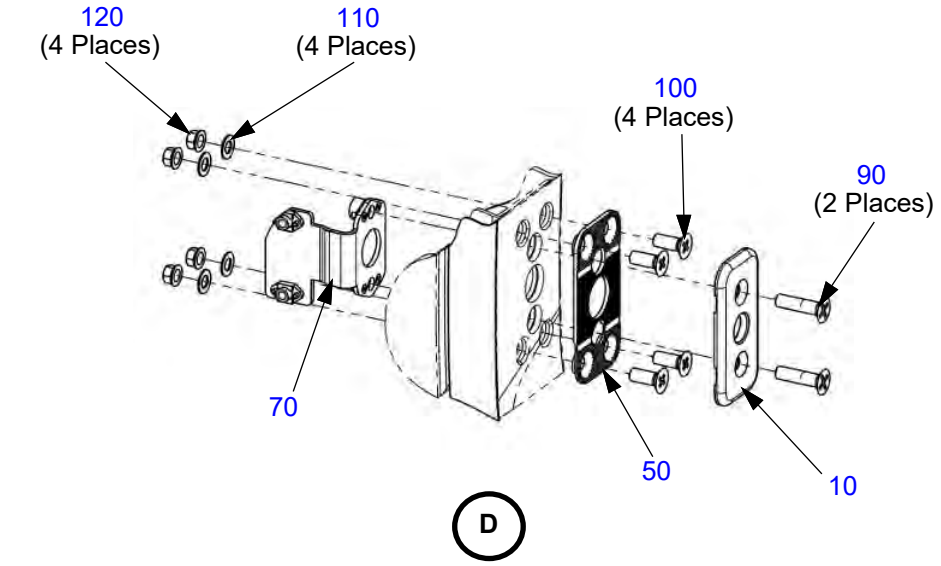

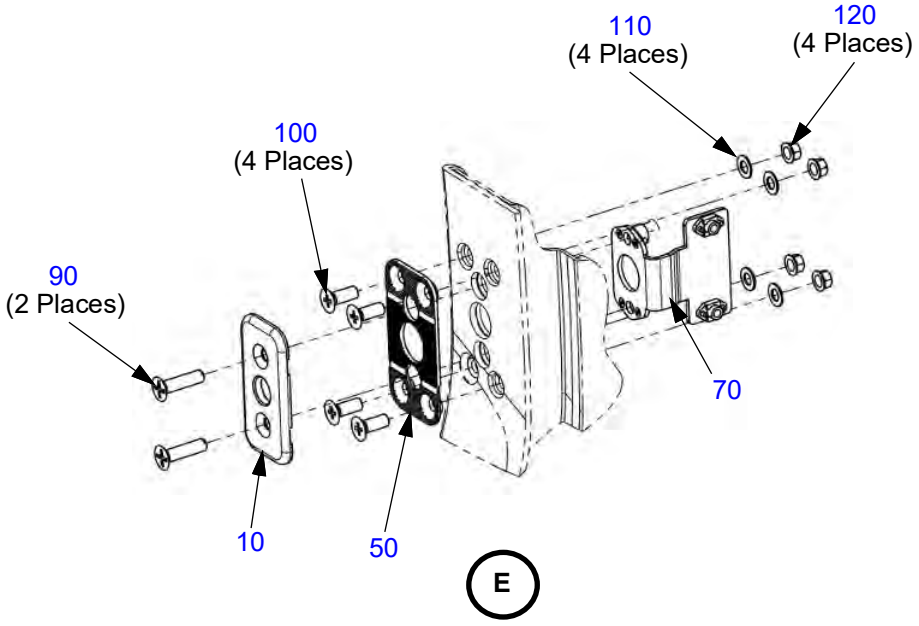

Table 52-10.5: Pin Plates

Figure Item Number	Part Number	Part Name	Effectivity Code	Amount in Assy.
10	PK52300004	Receiver Plate, Door Pin, Adjustable	K003 and On	4
20	PK52300006	Receiver Plate, Door Pin, Adjustable, Top	K003 and On	2
30	PK52300007	Receiver Plate, Door Pin, Adjustable, Upper-side	K003 and On	2
40	PK52300001	Plate, Door Pin, Stationary, Middle	K003 and On	4
50	PK52300002	Plate, Door Pin, Stationary, Bottom	K003 and On	2
60	PK52300003	Plate, Door Pin, Stationary, Top	K003 and On	2
70	AK52330000	Assy, Backing Plate, Door Pin	K003 and On	7
80	AK52330003	Assy, Backing Plate, Step Light & Door Pin	K003 and On	1
90	NAS1102-4-16	Screw, Machine, C'sunk, Cruciform, Ø .250 x 1.000	K003 and On	16
100	MS24694-S97	Screw, Machine, C'sunk Ø .250 x 21/32	K003 and On	32
110	NAS620C416L	Washer, Reduced OD, CRES, .255 ID x .468 OD	K003 and On	32
120	MS21042L4	Nut, Self-locking, 450°, Reduced 1/4-28	K003 and On	32

Figure 52-10.6: Door Steps

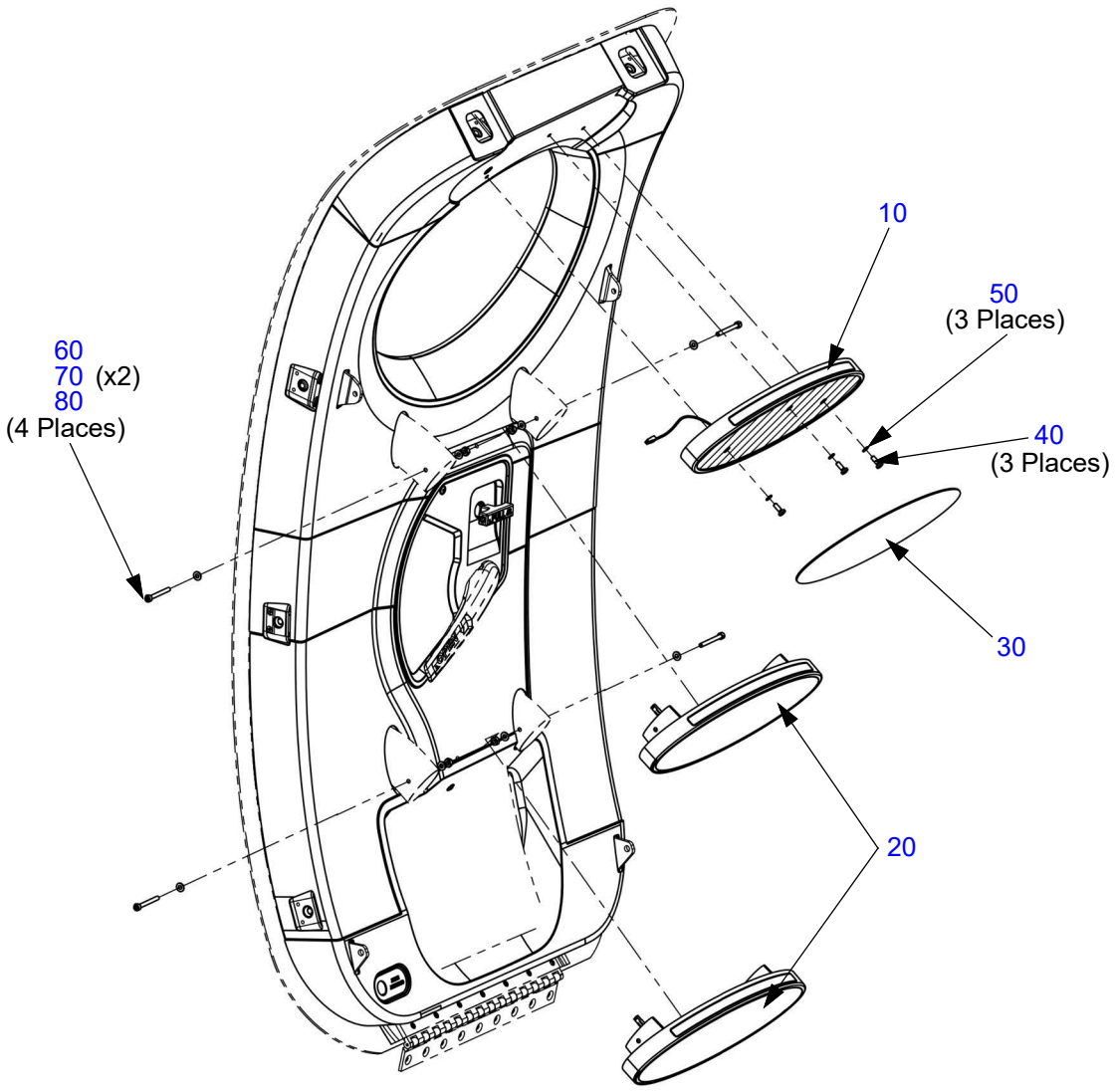

Table 52-10.6: Door Steps

Figure Item Number	Part Number	Part Name	Effectivity Code	Amount in Assy.
10	AK25221313	Assy, Bottom Step, With Light	K003 and On	1
20	AK25221312	Assy, Middle And Upper Steps, Light	K003 and On	2
30	PK25221310	Tread For Steps	K003 and On	1
40	MS27039-1-08	Screw, Pan Head, .190 x .531 Lg.	K003 and On	3
50	NAS620C10L	Washer, Reduced OD, CRES, .195 ID x .354 OD	K003 and On	3
60	NAS1351C3-28	Screw, Socket Head, CRES Ø .190-32 x 1.750	K003 and On	4
70	NAS1149C0332R	Washer, Flat, CRES #10 x .032	K003 and On	8
80	MS21083C3	Corrosion Steel Nut, Self-locking, Non-metallic Insert 10-32	K003 and On	4

Figure 52-10.7: Door Finish Panels

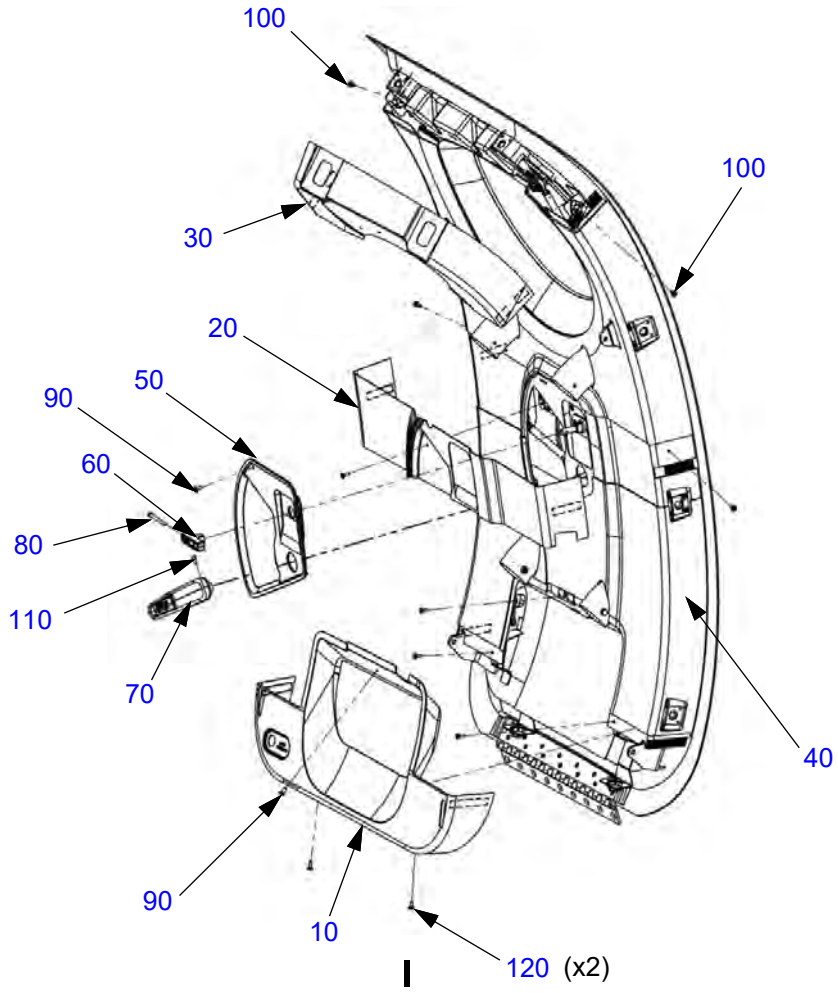

Table 52-10.7: Door Finish Panels

Figure Item Number	Part Number	Part Name	Effectivity Code	Amount in Assy.
10	AK25221303	Lower Panel, Door, Sound Damping Assy	K003 and On	1
20	AK25221304	Accent Panel, Door, Upholstery Assy	K003 and On	1
30	AK25221302	Upper Panel, Door, Upholstery Assy	K003 and On	1
40	AK25221301	Side Panel, Door, Upholstery Assy	K003 and On	1
50	PK25221305	Handle Garnish, Door	K003 and On	1
60	AK52108007	Assembly, Interior Lock Release Handle	K003 and On	1
70	AK52108008	Assembly, Interior Handle, Cabin Door	K003 and On	1
80	NAS1351-3-32P	Screw, Socket Head Ø .190-32 x 2.000	K003 and On	1
90	AN525-10R7	Screw, Washer Head, .190 x .438 Lg.	K003 and On	2
100	AN525-832R8	Screw, Washer Head, .164 x .500 Lg.	K003 and On	8
110	NAS1352-3-6P	Screw, Socket Head .190-24 x .375	K003 and On	1
120	MS24694-S4	Screw, Machine, C'sunk Ø .164 x 15/32	K003 and On	2

Figure 52-10.8: Latch Assembly Pins

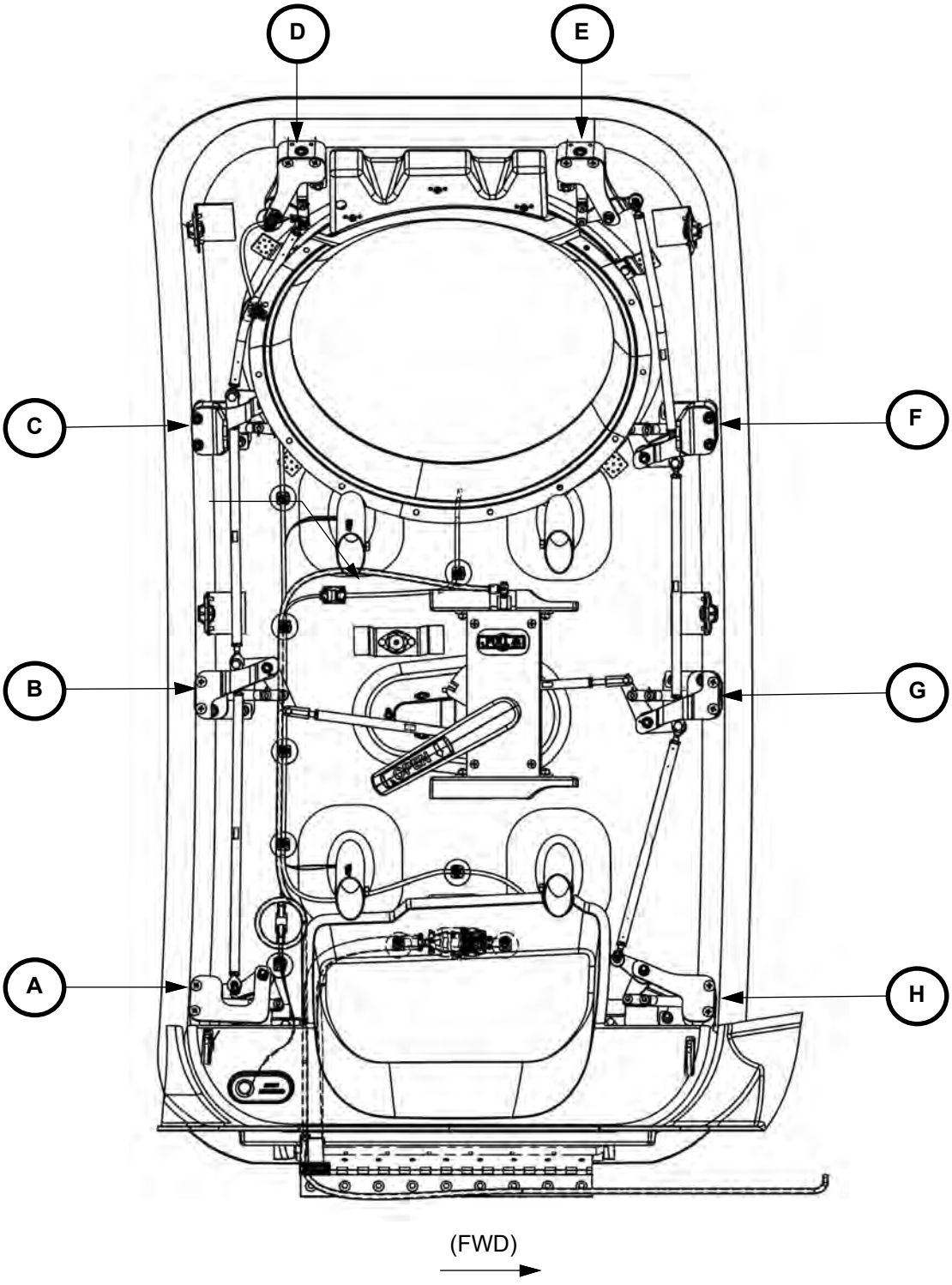

Figure 52-10.8: Latch Assembly Pins (Continued)

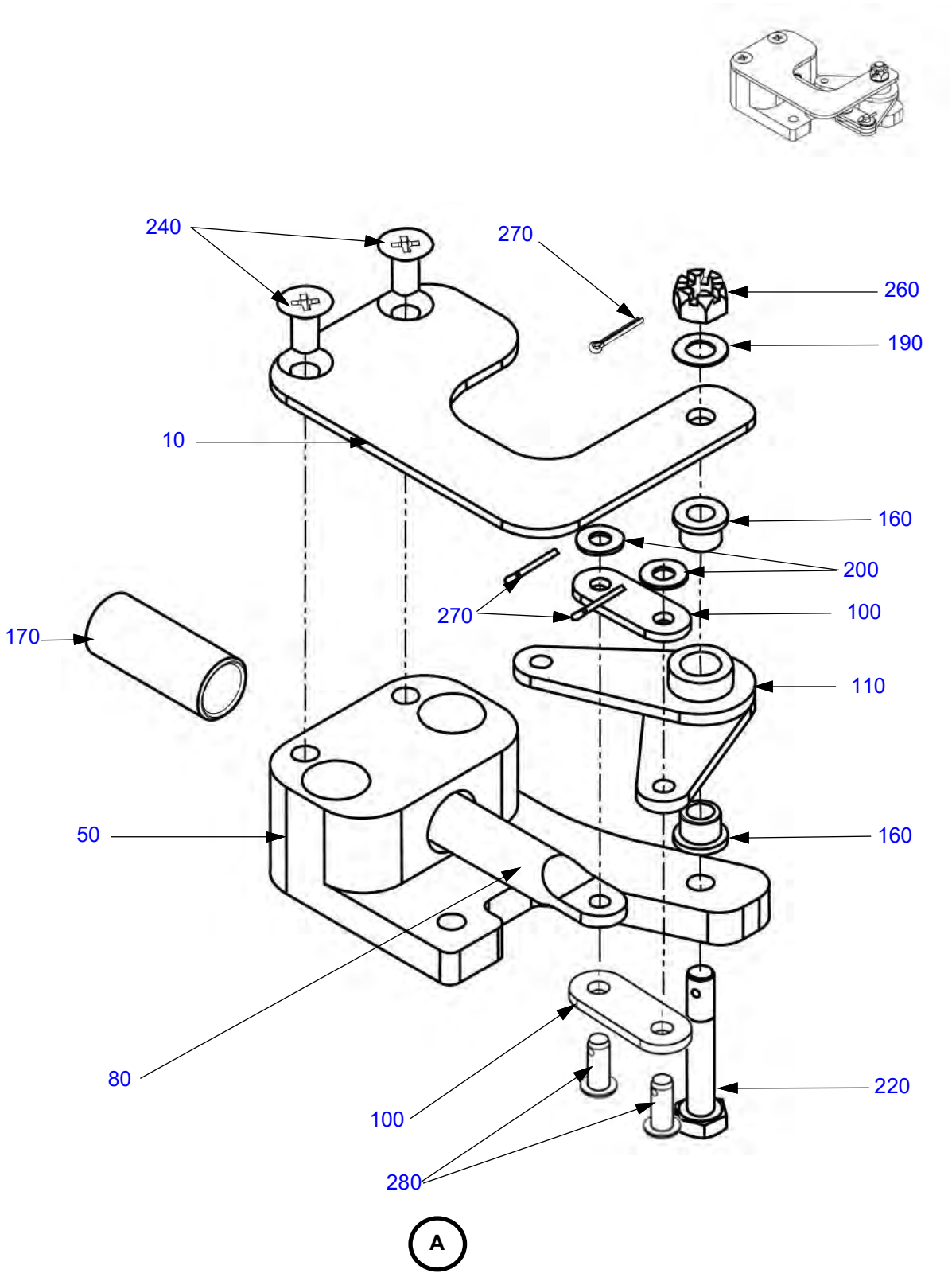

Figure 52-10.8: Latch Assembly Pins (Continued)

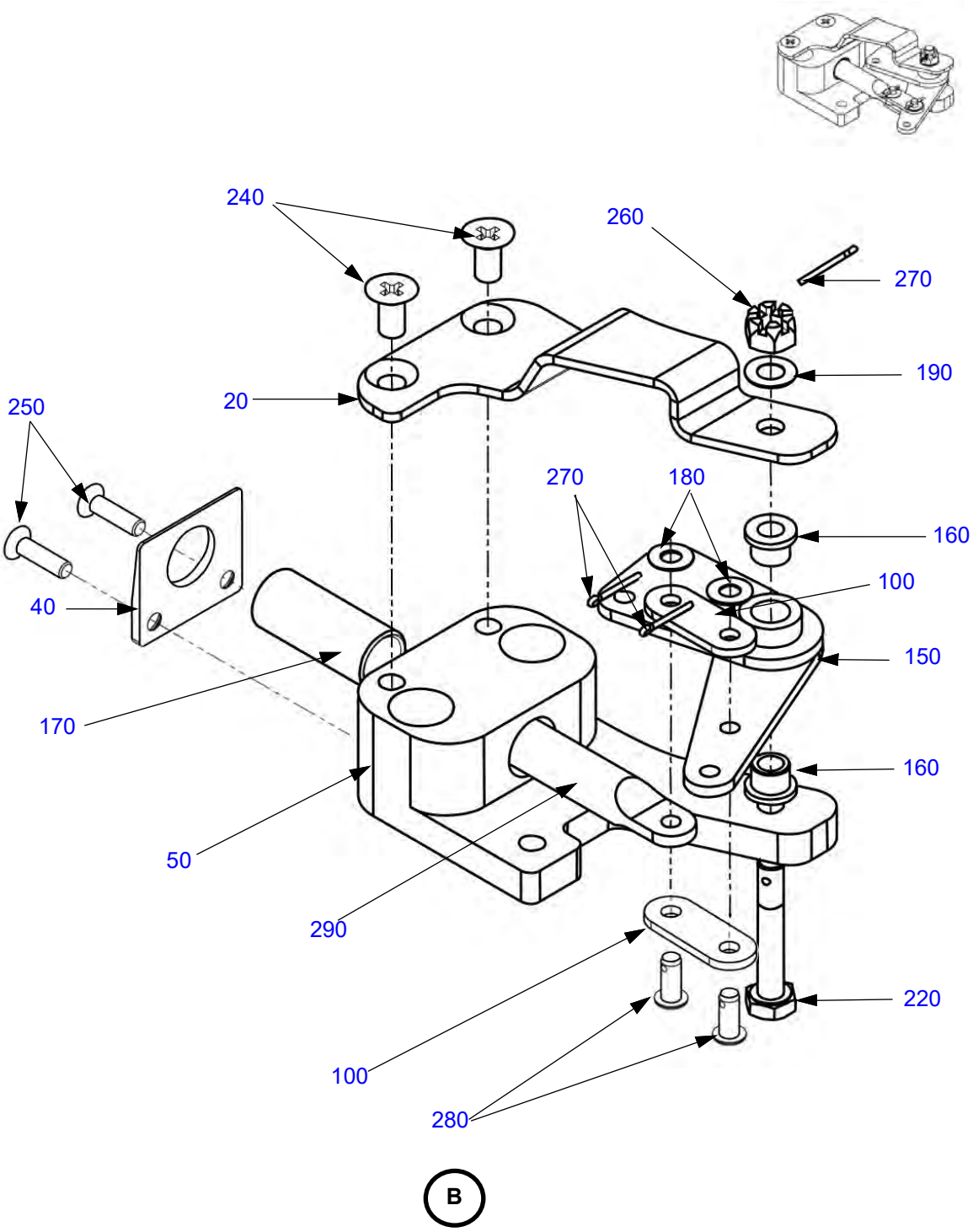

Figure 52-10.8: Latch Assembly Pins (Continued)

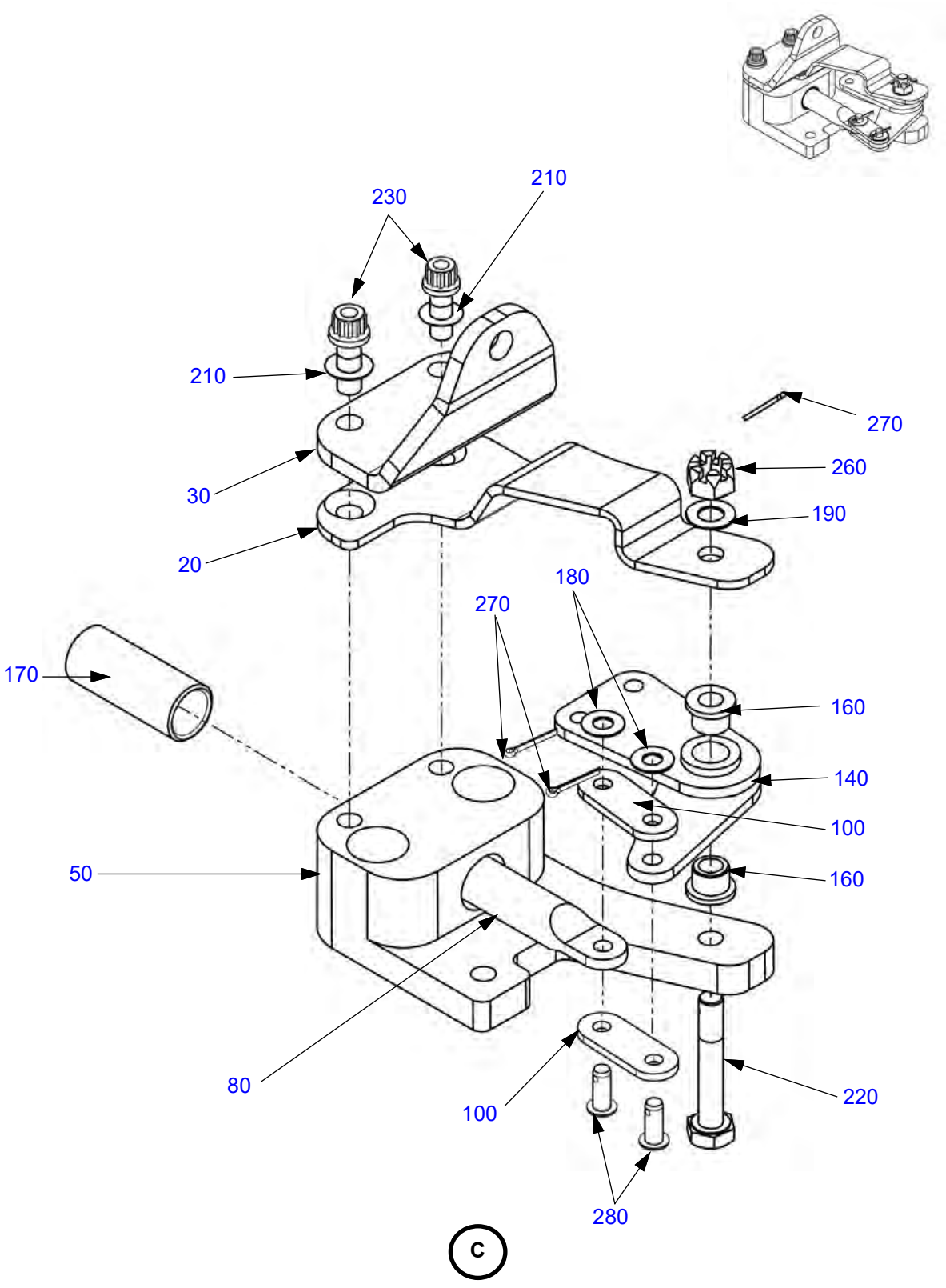

Figure 52-10.8: Latch Assembly Pins (Continued)

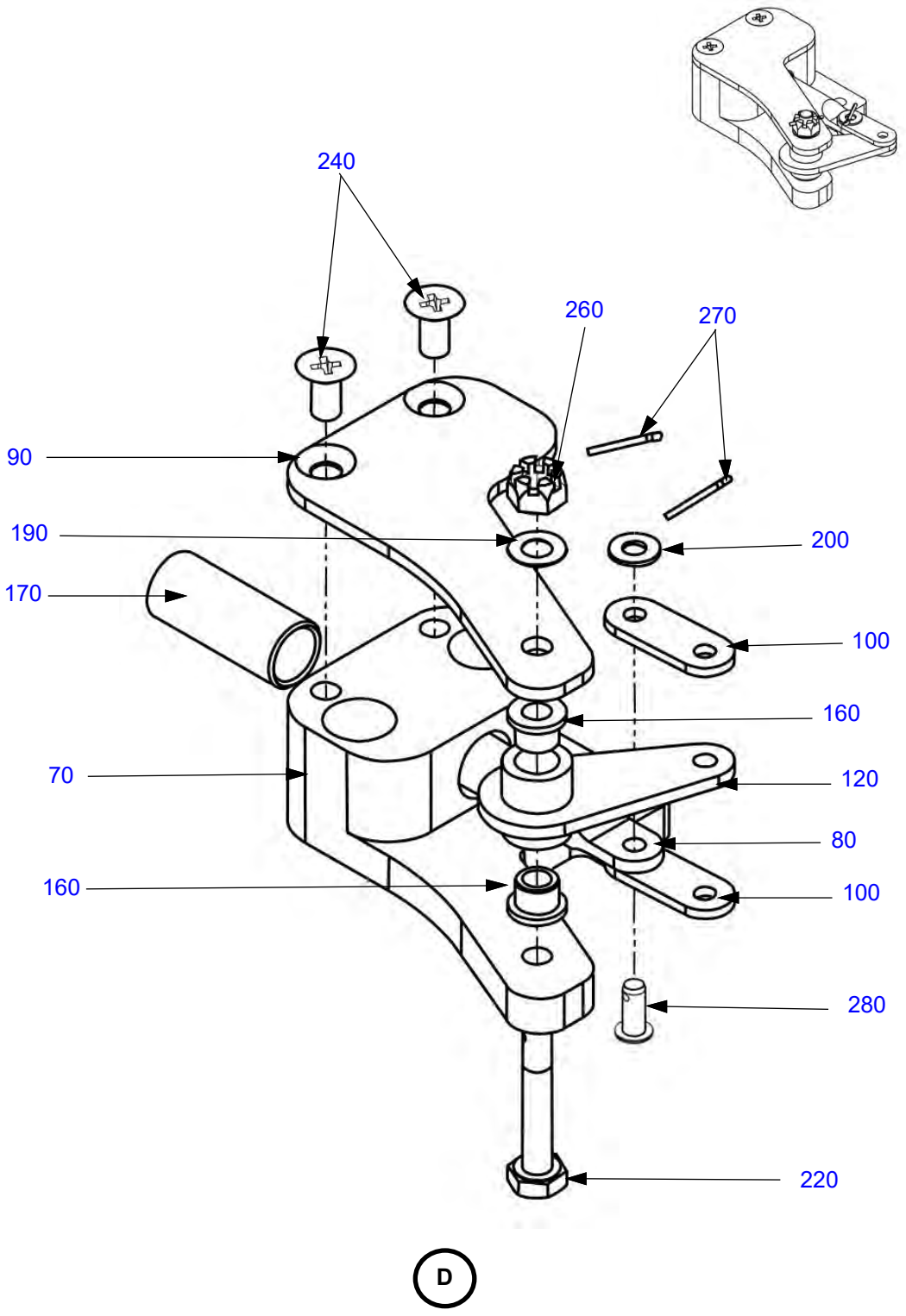

Figure 52-10.8: Latch Assembly Pins (Continued)

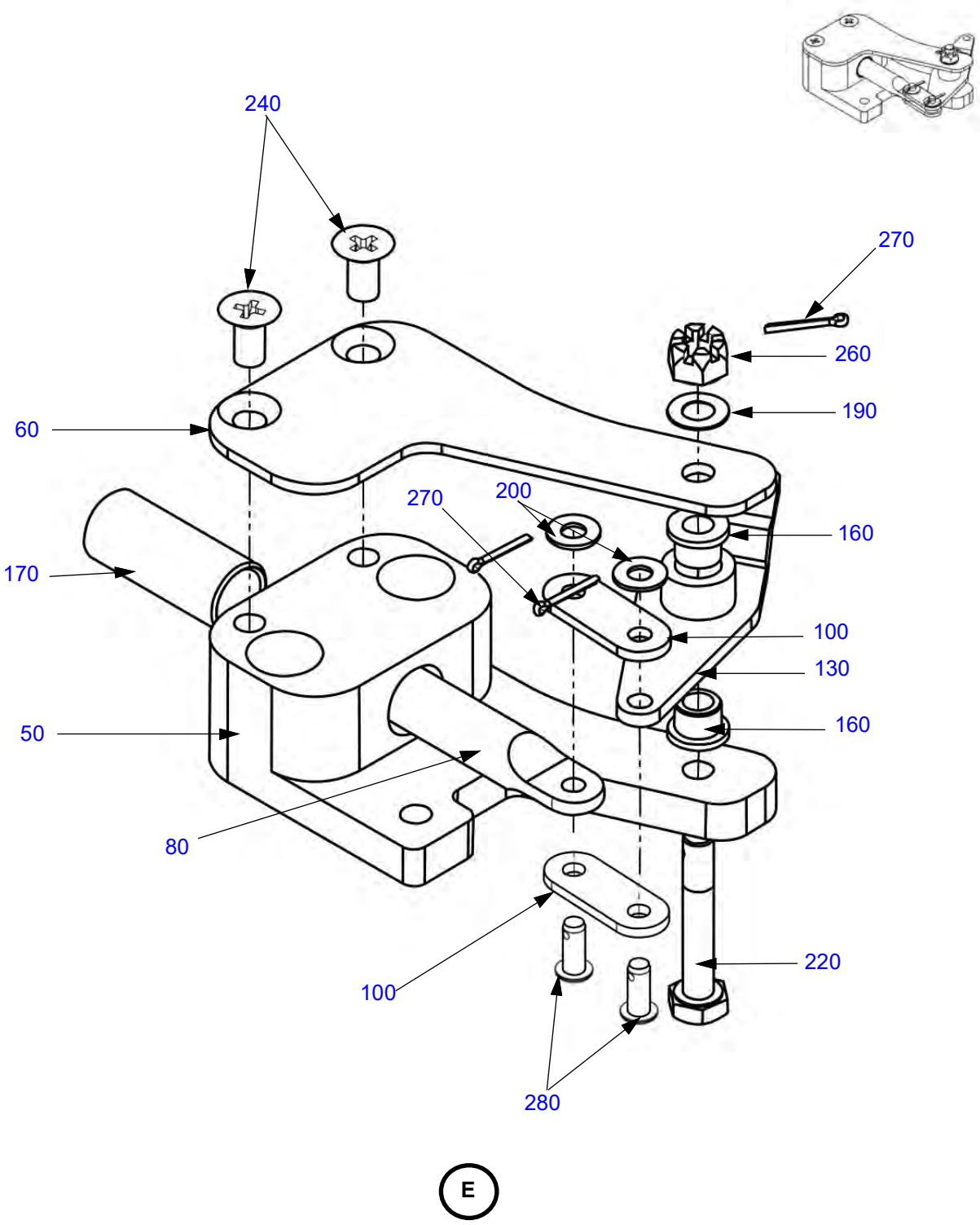

Figure 52-10.8: Latch Assembly Pins (Continued)

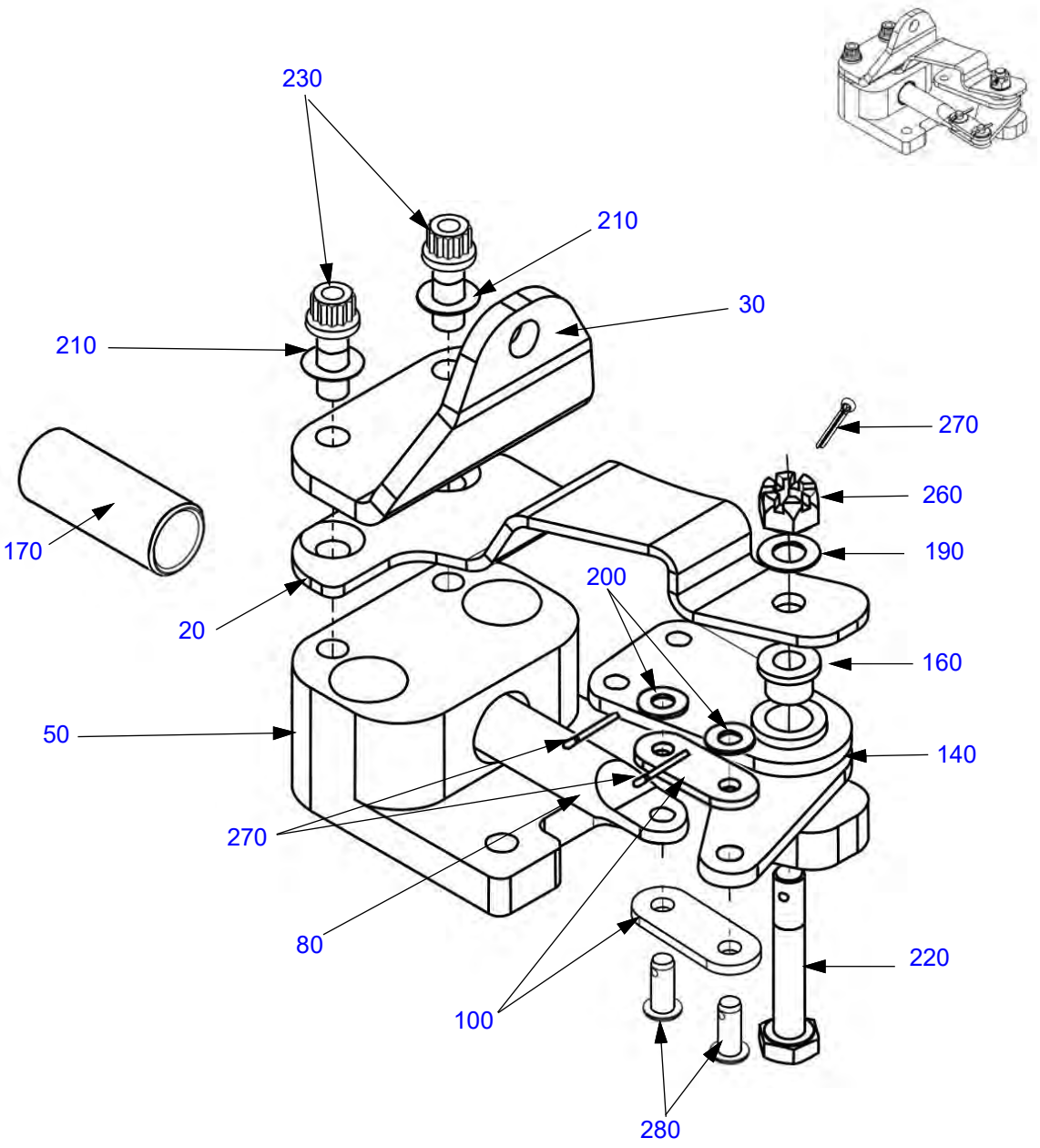

Figure 52-10.8: Latch Assembly Pins (Continued)

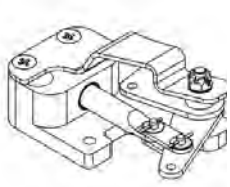

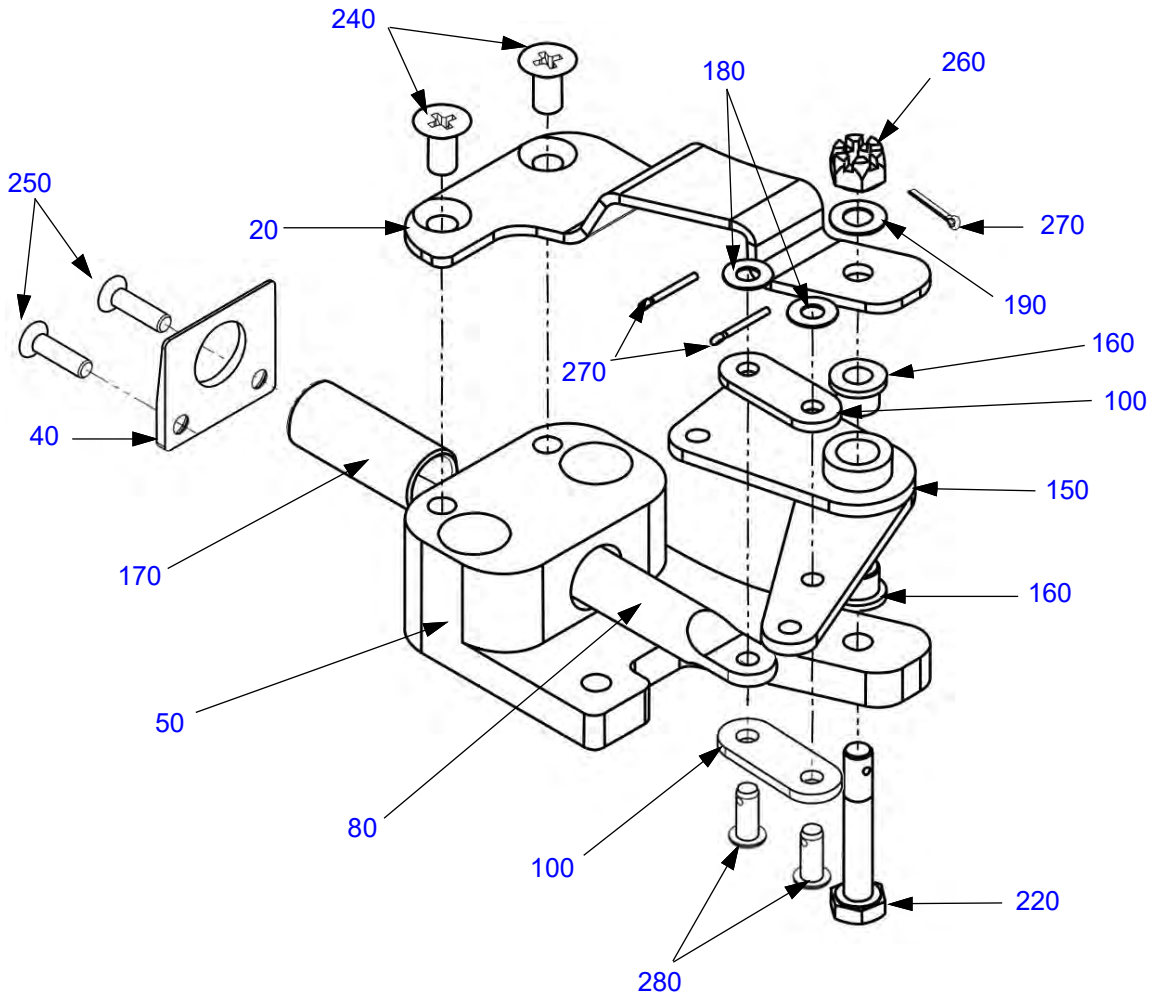

Figure 52-10.8: Latch Assembly Pins (Continued)

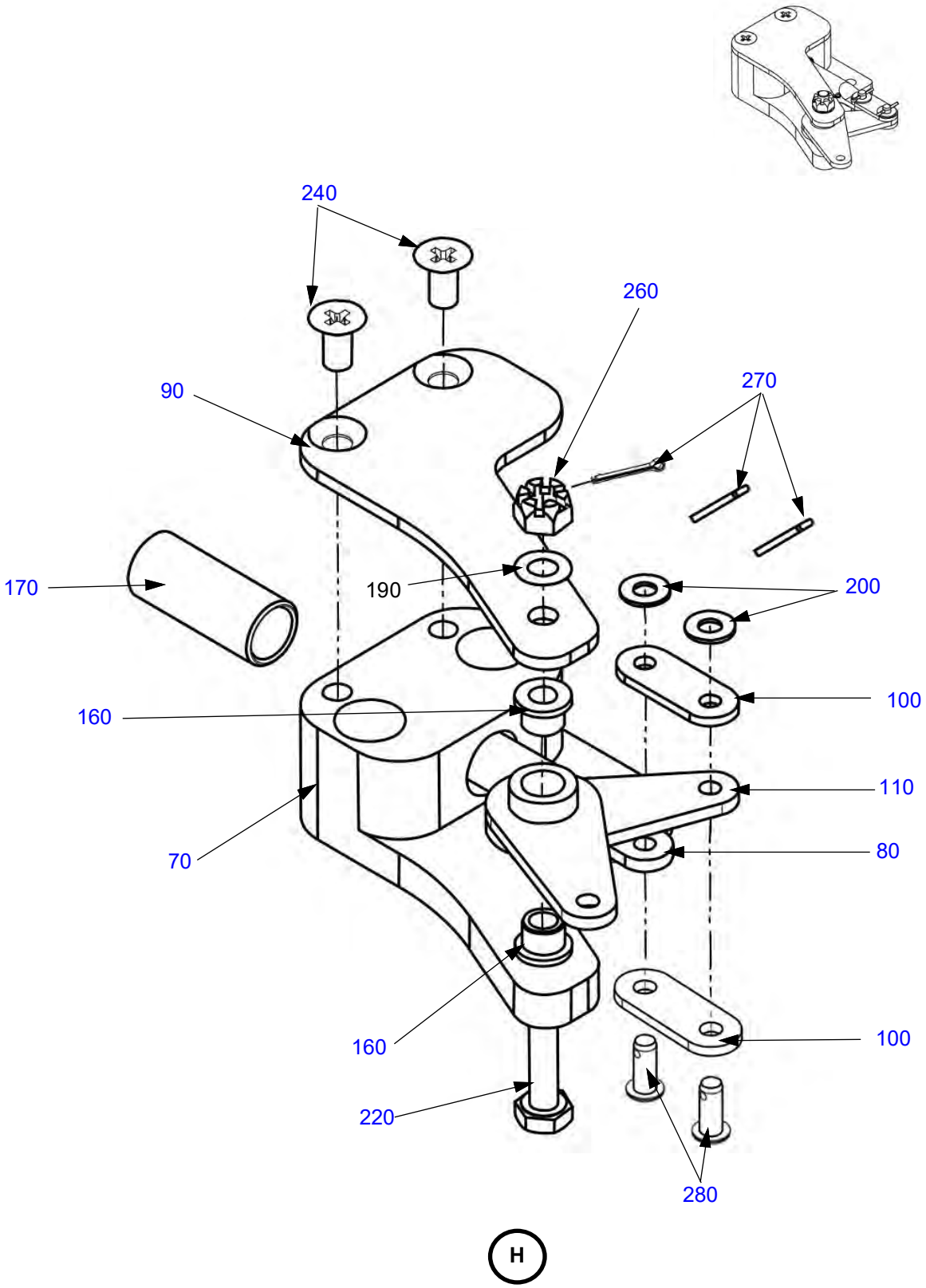

Table 52-10.8: Latch Assembly Pins

Figure Item Number	Part Number	Part Name	Effectivity Code	Amount in Assy.
10	PK52100501	Latch Cover, Door, Flat	K003 and On	1
20	PK52100401	Latch Cover, Door, Formed	K003 and On	4
30	PK52100402	Door Cable Attach	K003 and On	2
40	PK52100403	Pad, Door Alignment	K003 and On	2
50	PK52100301	Latch Base, Door	K003 and On	6
60	PK52100302	Latch Cover, Door, Mirror	K003 and On	1
70	PK52100101	Latch Base, Door, Std	K003 and On	2
*80	PK52100102	Latch Pin, Door	K003 and On	8
90	PK52100103	Latch Cover, Door, Mirror	K003 and On	2
100	PK52100122	Latch Link, Door	K003 and On	16
110	AK52100110	Cam Weldment, Door, Type 1	K003 and On	2
120	AK52100210	Cam Weldment, Door, Type 3	K003 and On	1
130	AK52100310	Cam Weldment, Door, Type 4	K003 and On	1
140	AK52100410	Cam Weldment, Door, Type 5	K003 and On	2
150	AK52100610	Cam Weldment, Door, Type 7	K003 and On	2
160	NAS77A4-025	Bushing, Flanged .250 ID x .376 OD x 0.250 Grip	K003 and On	16
170	NAS76A8-116	Bushing, Straight, Alum. Bronze .500 ID x 1.500	K003 and On	8
180	NAS1149F0316P	Washer, Flat #10 x .016	K003 and On	6
190	NAS1149F0416P	Washer, Flat 1/4 x .016	K003 and On	8
200	NAS1149F0332P	Washer, Flat #10 x .032	K003 and On	9
210	MS20002C4	Washer, Countersunk, High Strength, 1/4" ID	K003 and On	4
220	AN4-14	Bolt, 1/4-28 x 1-17/32" Drilled Shank	K003 and On	8
230	MS21250-04004	Bolt, Tension, 12 Point Ø .250-28 x 0.762	K003 and On	4
240	MS24693-S294	Screw, Machine, C'sunk Ø .250 x 0.500	K003 and On	12

Figure Item Number	Part Number	Part Name	Effectivity Code	Amount in Assy.
250	MS24693-S51	Screw, Machine, C'sunk Ø .164 x 0.625	K003 and On	4
260	AN310-4	Nut, Castellated, Steel 1/4-28	K003 and On	8
270	MS24665-132	Pin, Cotter, Cad Steel Ø .062 x .50	K003 and On	23
280	MS20392-2C11	Pin, Drilled Shank Ø .188 x 0.516	K003 and On	15
*290	PK52100104	Latch Pin, Door	K003 and On	1

*Part number PK52100104 is interchangeable with part number PK52100102 to achieve proper door pin rigging.

Figure 52-10.9: Door Locking Mechanism Attachment

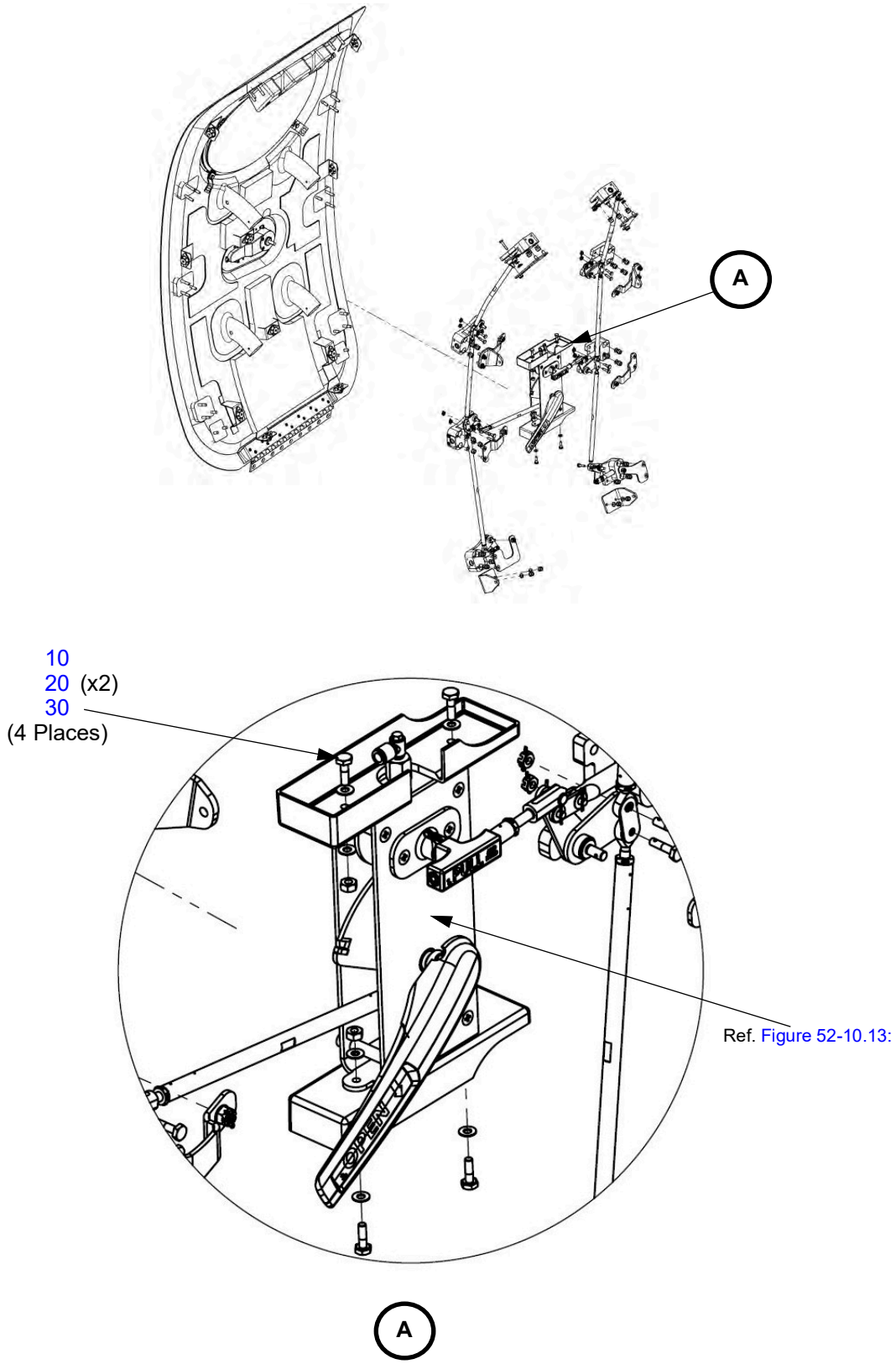

Table 52-10.9: Door Locking Mechanism Attachment

Figure Item Number	Part Number	Part Name	Effectivity Code	Amount in Assy.
10	AN3-5A	Bolt, 10-32 x 21/32" Undrilled	K003 and On	4
20	NAS1149F0332P	Washer, Flat #10 x .032	K003 and On	8
30	MS21083N3	Nut, Self-locking, Non-metallic Insert 10-32	K003 and On	4

Figure 52-10.10: Door Latches

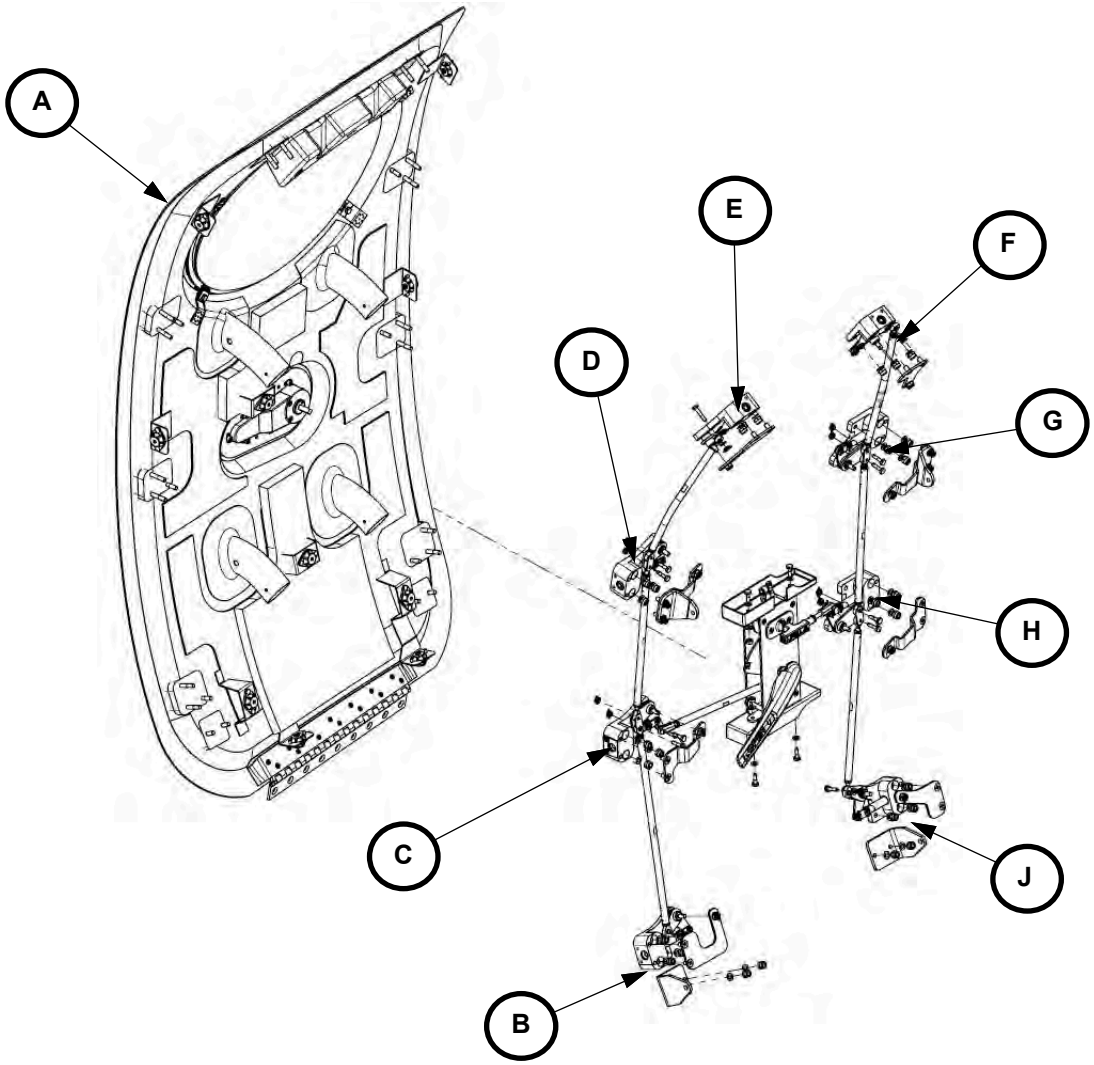

Figure 52-10.10: Door Latches (Continued)

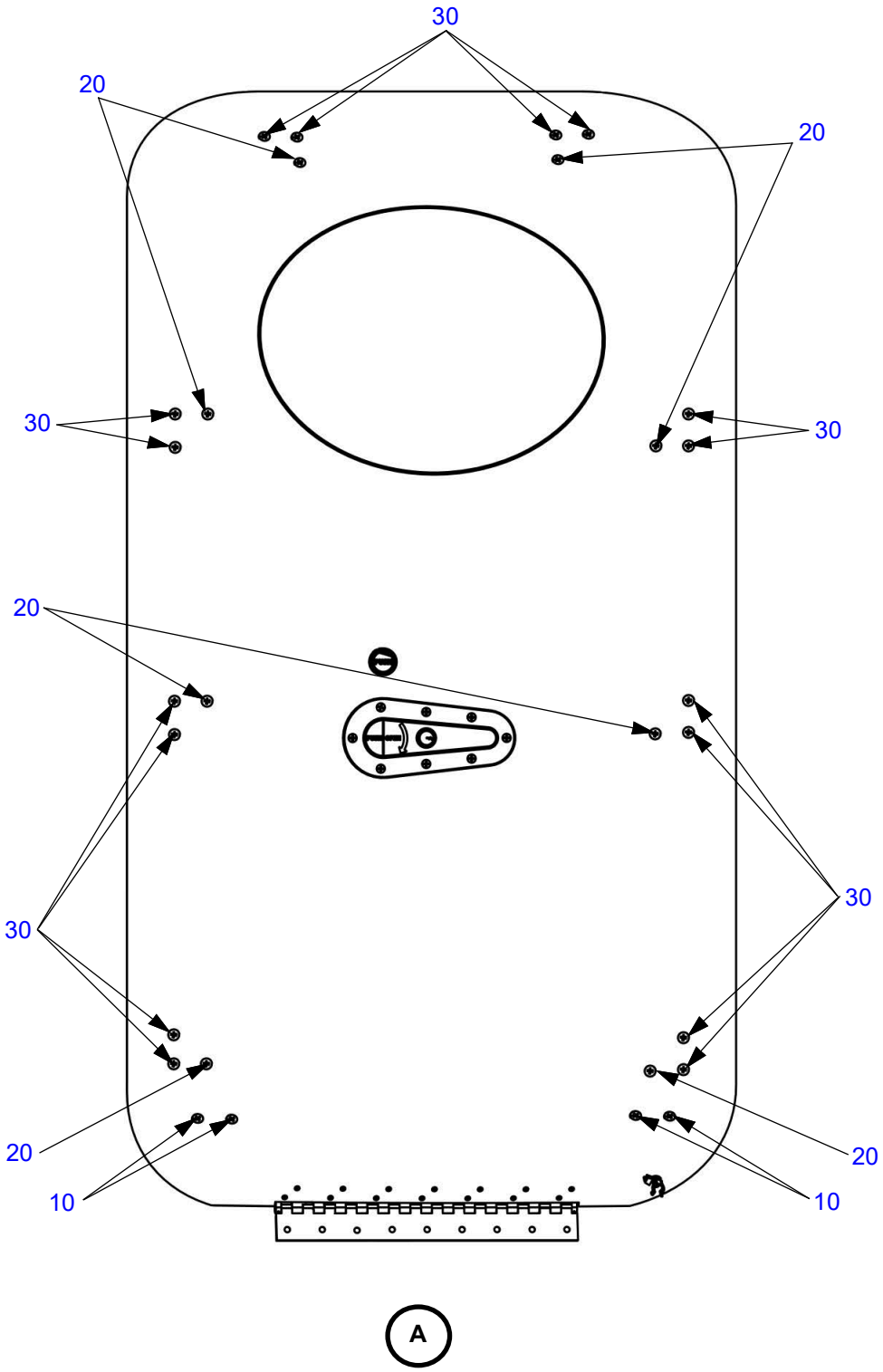

Figure 52-10.10: Door Latches (Continued)

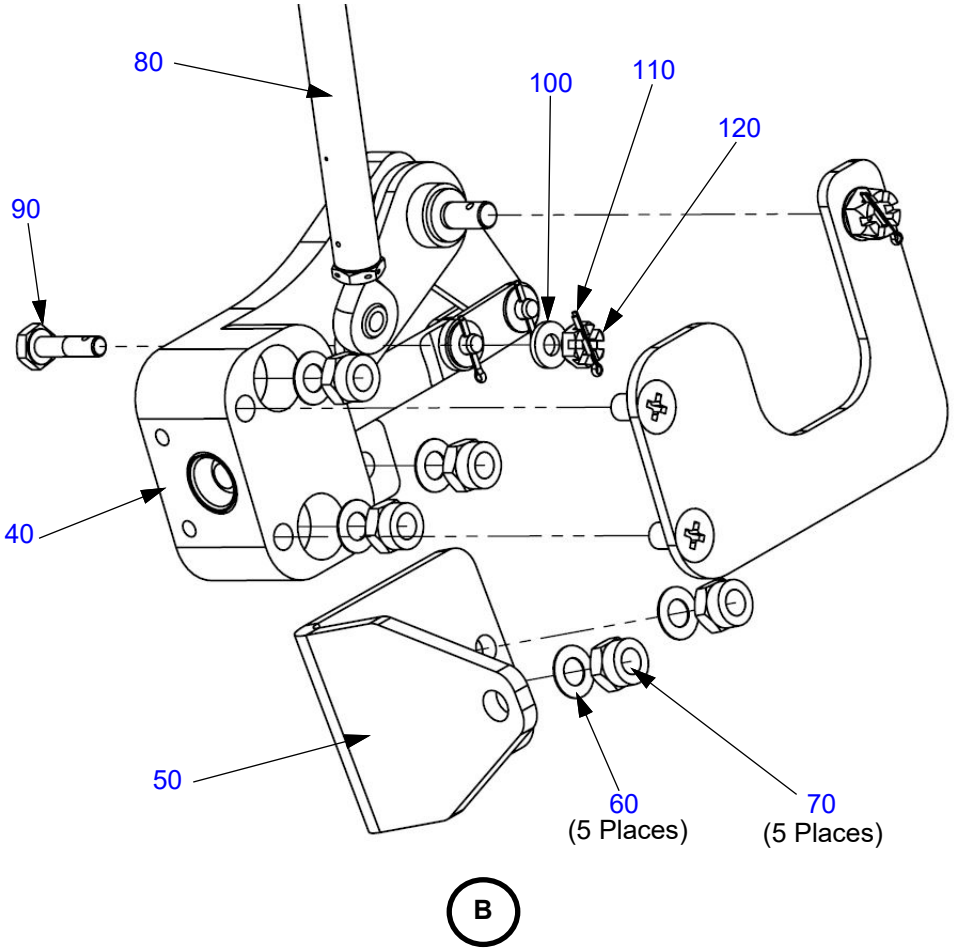

Figure 52-10.10: Door Latches (Continued)

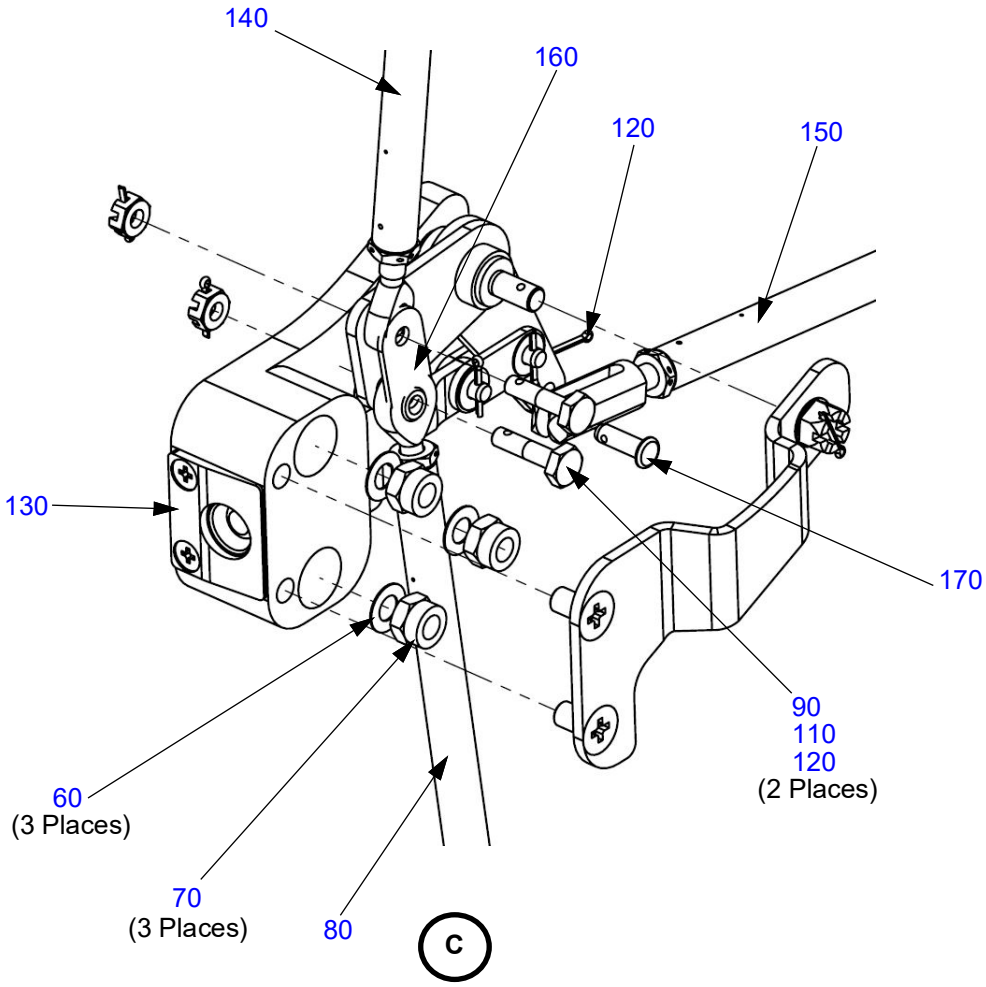

Figure 52-10.10: Door Latches (Continued)

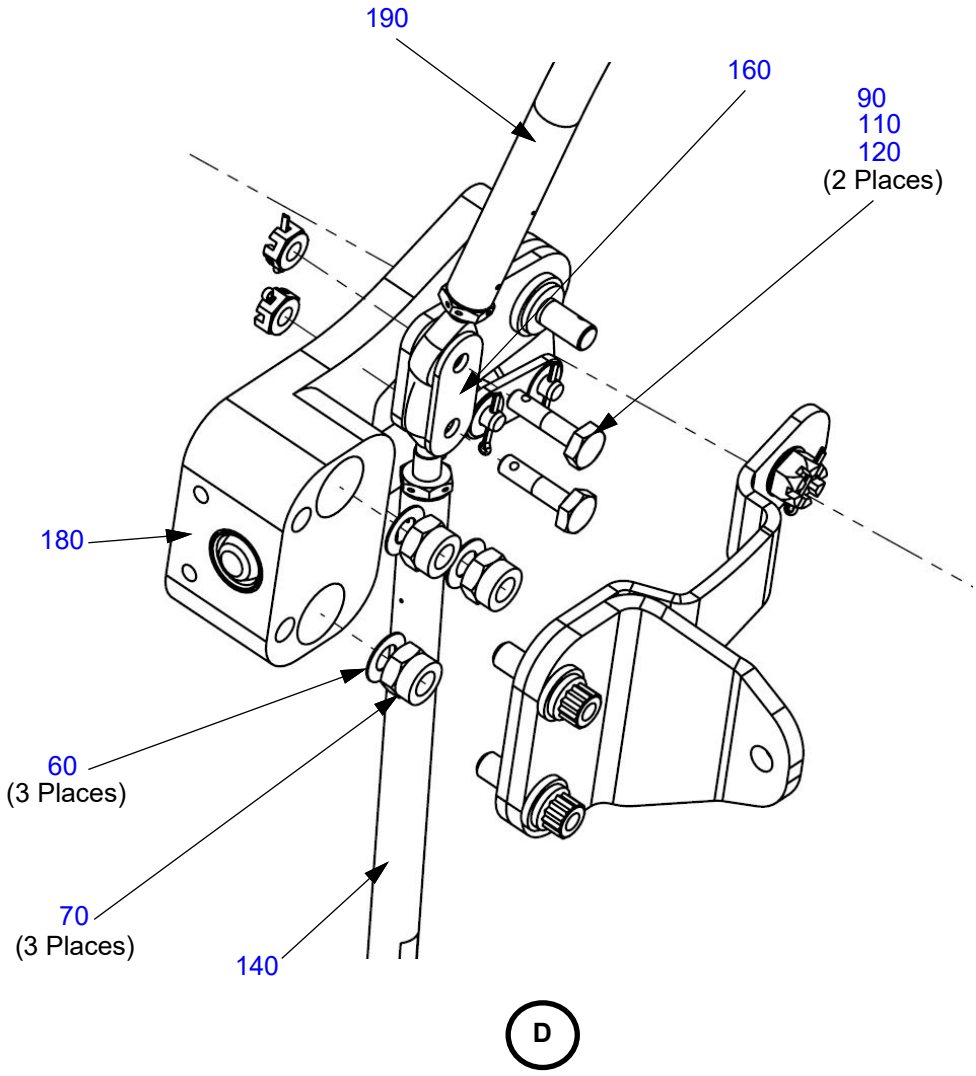

Figure 52-10.10: Door Latches (Continued)

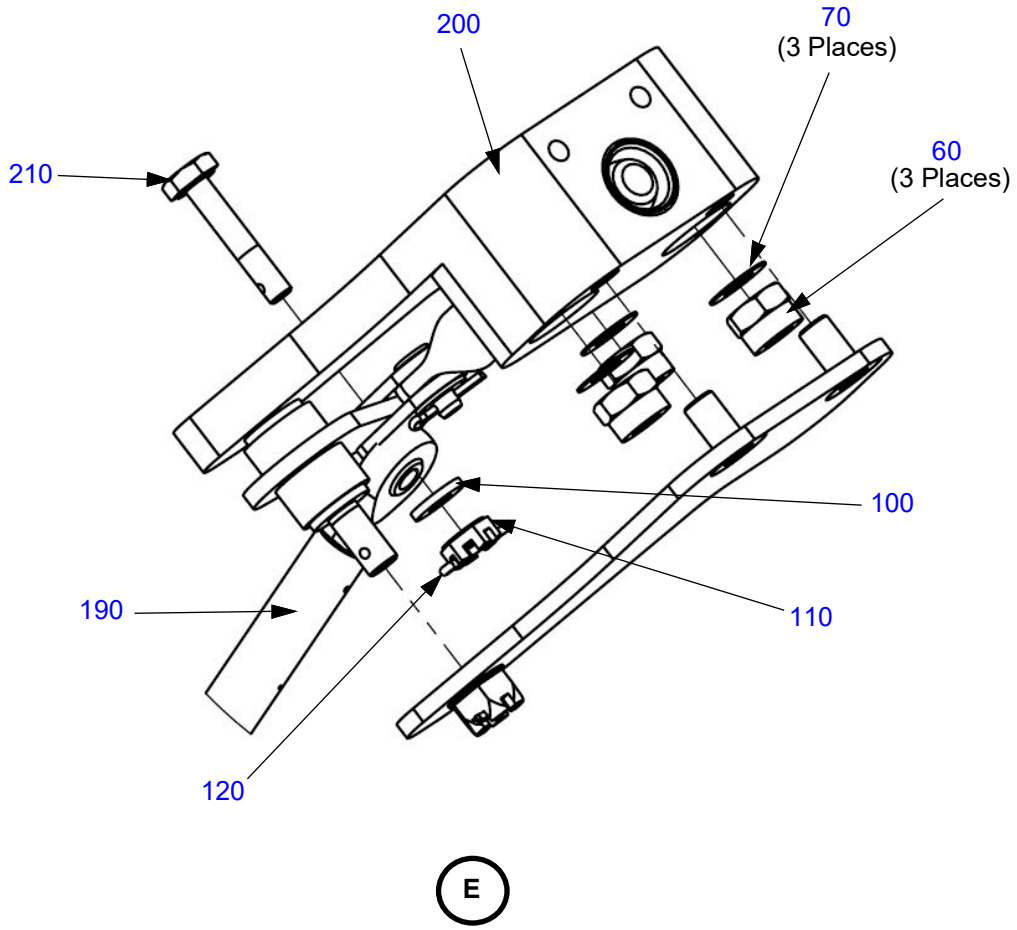

Figure 52-10.10: Door Latches (Continued)

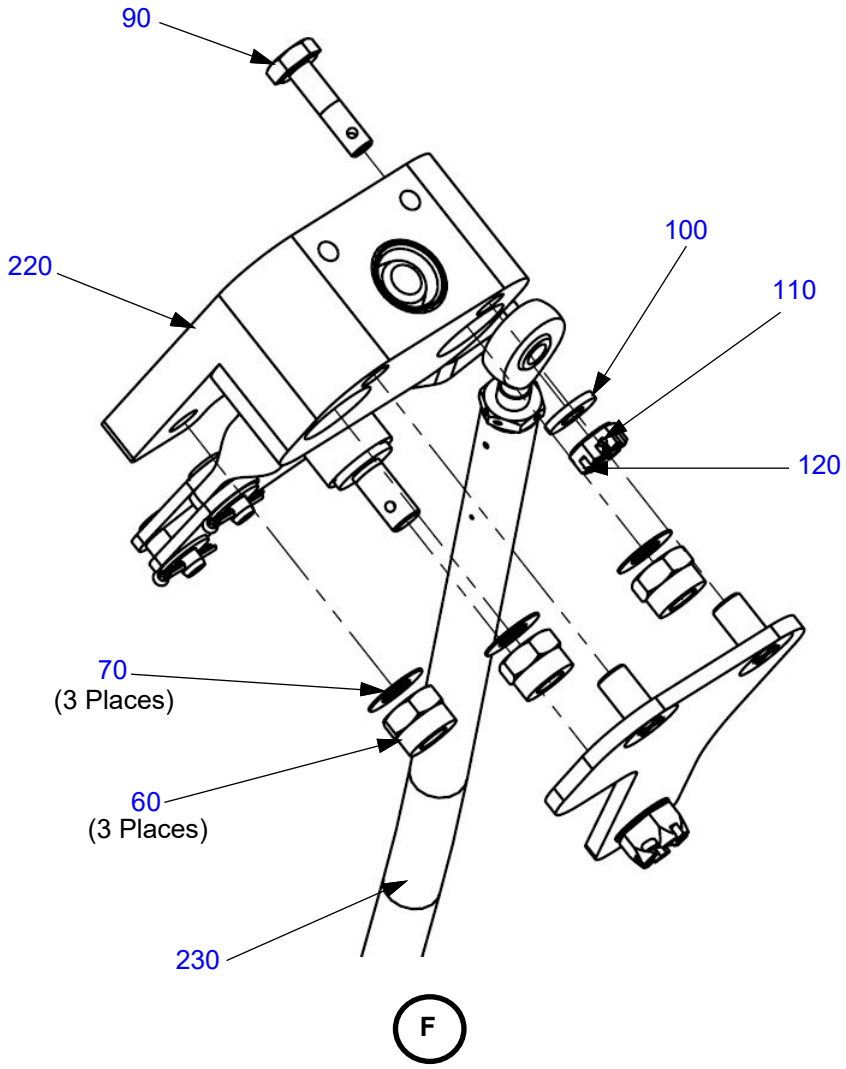

Figure 52-10.10: Door Latches (Continued)

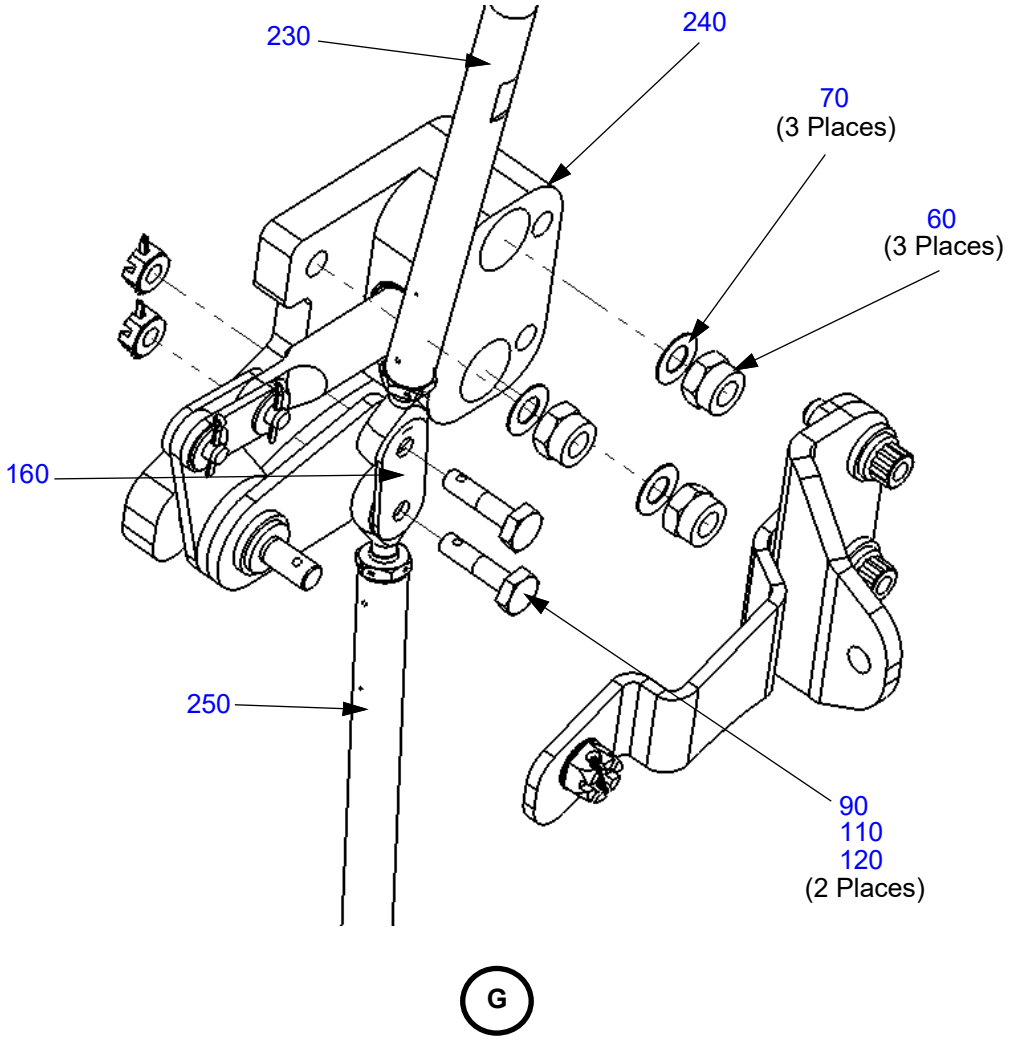

Figure 52-10.10: Door Latches (Continued)

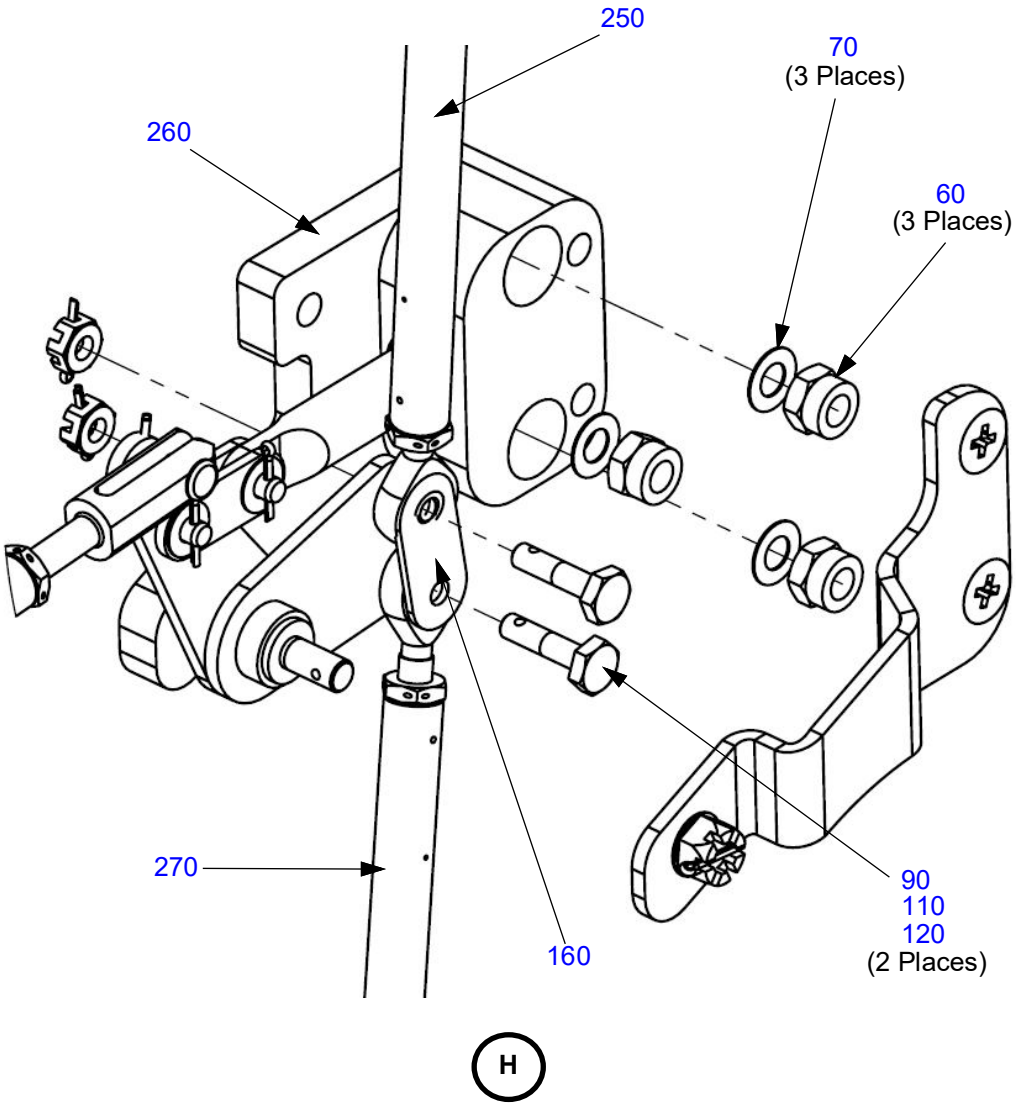

Figure 52-10.10: Door Latches (Continued)

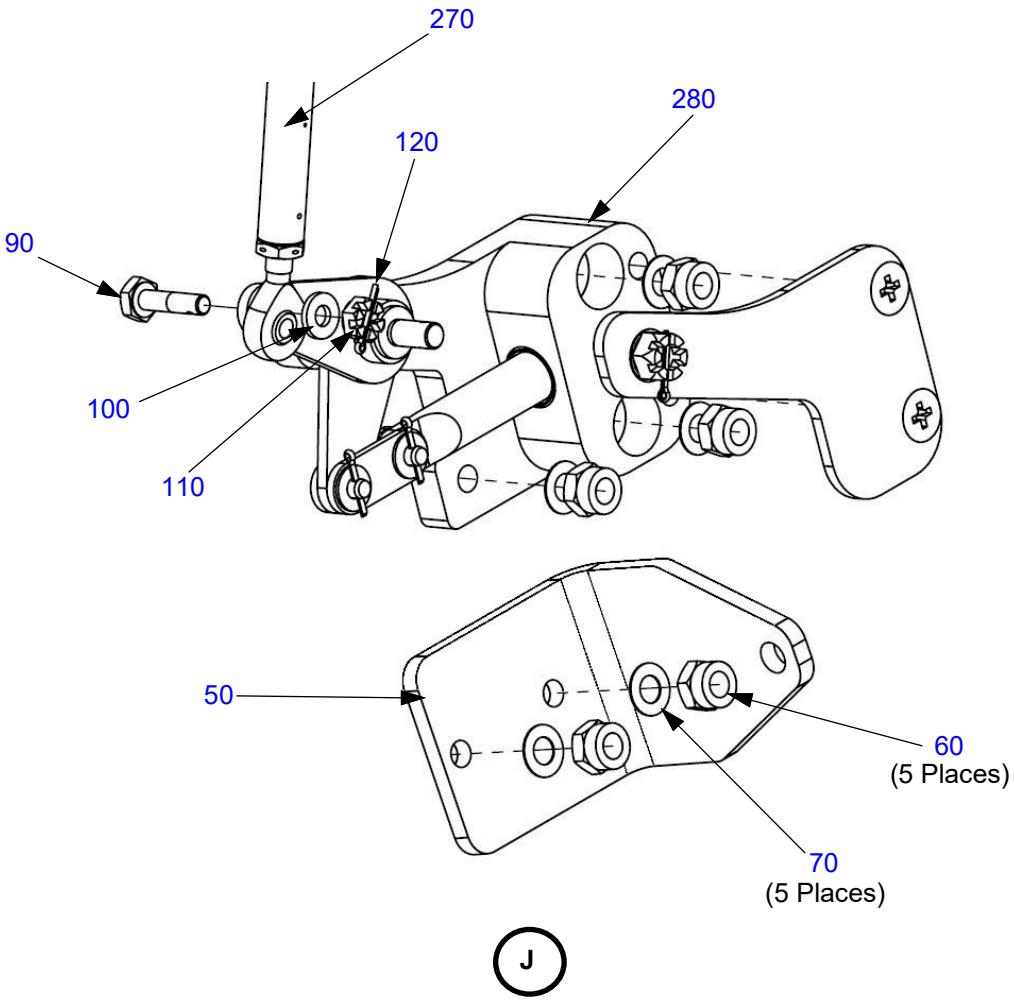

Table 52-10.10: Door Latches

Figure Item Number	Part Number	Part Name	Effectivity Code	Amount in Assy.
10	MS24694-S114	Screw, Machine, C'sunk Ø .250 x 1-23/32	K003 and On	4
20	MS24694-S117	Screw, Machine, C'sunk Ø .250 x 1-29/32	K003 and On	8
30	MS24694-S123	Screw, Machine, C'sunk Ø .250 x 2-9/32	K003 and On	16
40	AK52100500	Latch Assembly, Door, Lower, Aft	K003 and On	1
50	PK52100007	Plate, Strut Brkt, Door	K003 and On	2
60	MS21045L4	Nut, Self-locking, Steel 1/4-28	K003 and On	28
70	NAS1149F0416P	Washer, Flat 1/4 x .016	K003 and On	28
80	AK52105000	Assy, Pushrod, Door, Lower, Aft	K003 and On	1
90	AN3-6	Bolt, 10-32 x 25/32" Drilled Shank	K003 and On	11
100	NAS1149F0363P	Washer, Flat #10 x .063	K003 and On	4
110	AN320-3	Nut, Castellated, Shear, Steel 10-32	K003 and On	12
120	MS24665-132	Pin, Cotter, Cad Steel Ø .062 x .50	K003 and On	13
130	AK52100600	Latch Assy, Door, Mid, Aft	K003 and On	1
140	AK52104000	Assy, Pushrod, Door, Mid, Aft	K003 and On	1
150	AK52108000	Door Locking Mechanism	K003 and On	1
160	PK52100013	Pin Block Master Link, Door	K003 and On	4
170	MS20392-2C15	Clevis Pin	K003 and On	1
180	AK52100700	Latch Assembly, Door, Upper, Aft	K003 and On	1
190	AK52103000	Assy, Pushrod, Door, Upper, Aft	K003 and On	1
200	AK52100200	Latch Assembly, Door, Top Aft	K003 and On	1
210	AN3-10	Bolt, 10-32 x 1-1/32" Drilled Shank	K003 and On	1
220	AK52100300	Latch Assembly, Door, Top Fwd	K003 and On	1
230	AK52100900	Assy, Pushrod, Door, Upper, Fwd	K003 and On	1
240	AK52100400	Latch Assembly, Door, Upper, Fwd	K003 and On	1
250	AK52101000	Assy, Pushrod, Door, Mid, Fwd	K003 and On	1
260	AK52100800	Latch Assy, Door, Mid, Fwd	K003 and On	1

Figure Item Number	Part Number	Part Name	Effectivity Code	Amount in Assy.
270	AK52102000	Assy, Pushrod, Lower, Fwd	K003 and On	1
280	AK52100100	Latch Assembly, Door, Lower, Fwd	K003 and On	1

Figure 52-10.11: Door Seal System

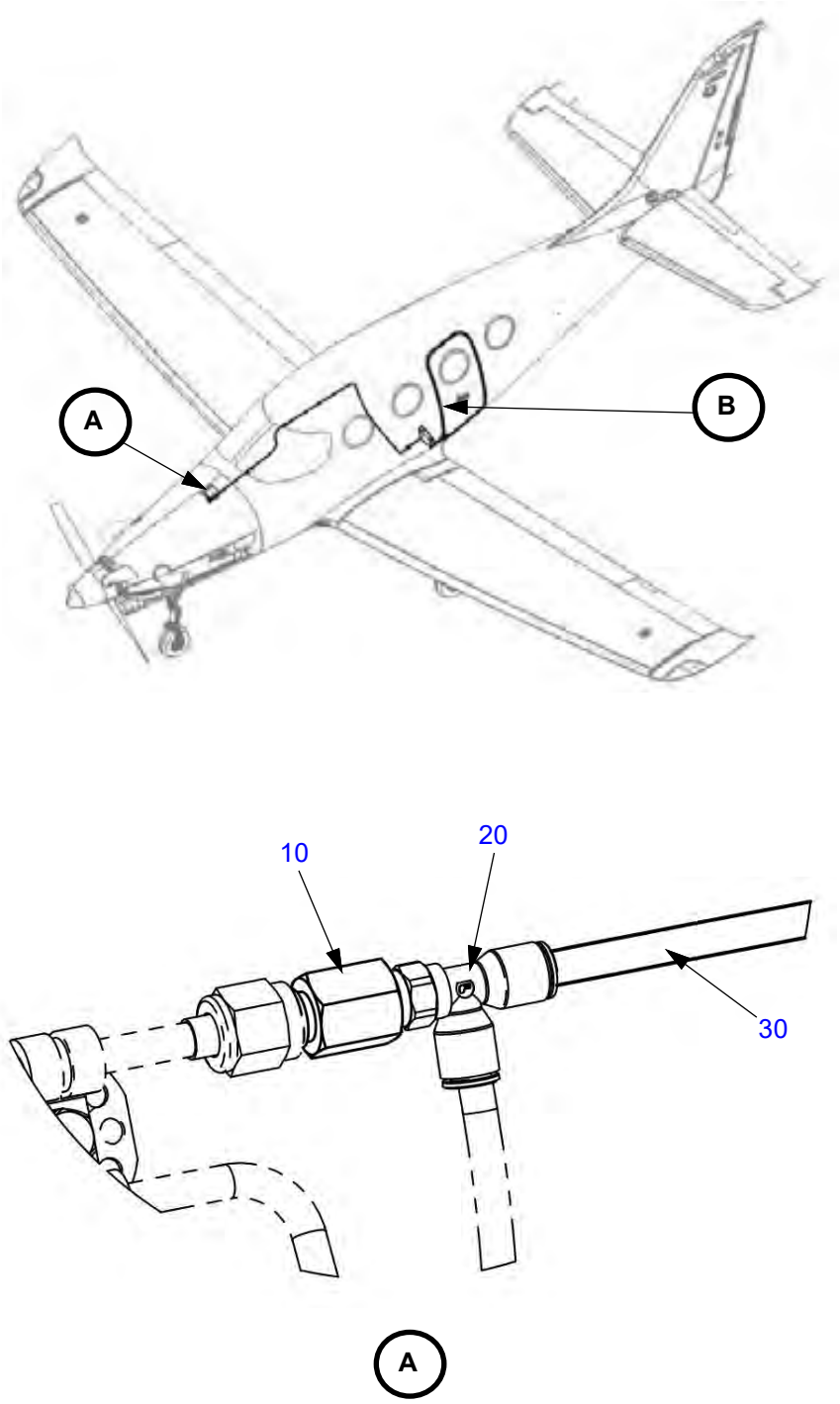

Figure 52-10.11: Door Seal System (Continued)

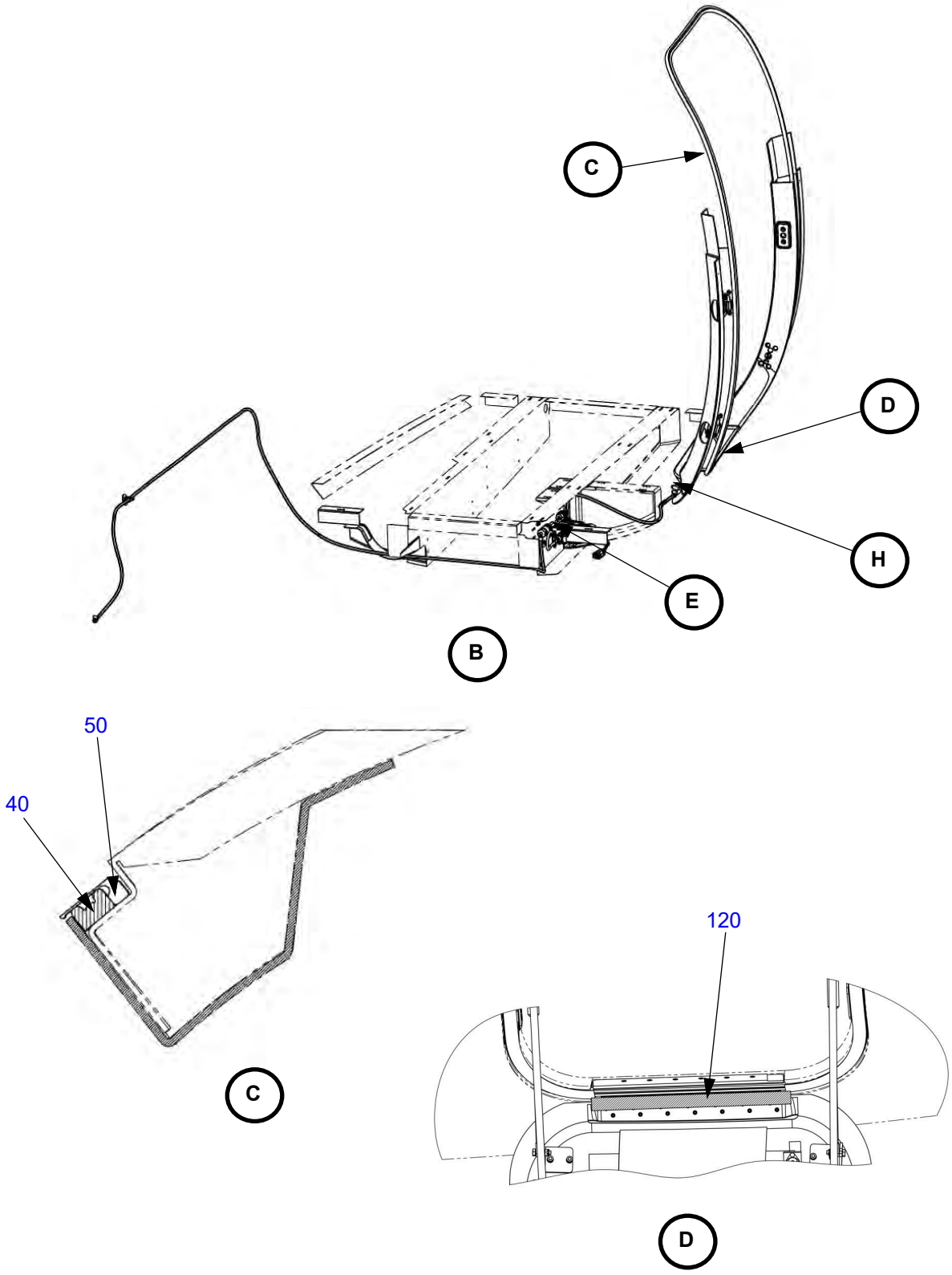

Figure 52-10.11: Door Seal System (Continued)

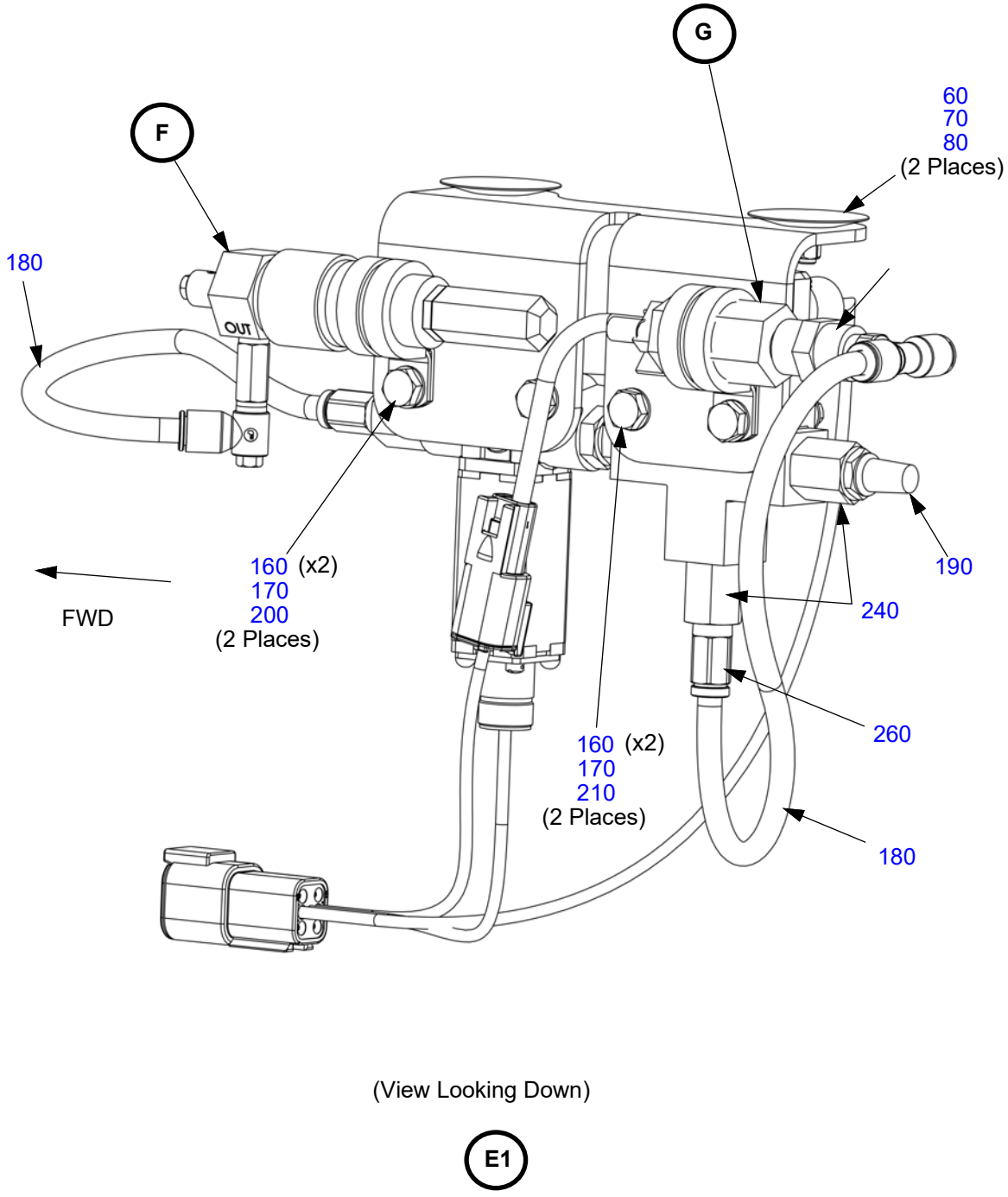

Figure 52-10.11: Door Seal System (Continued)

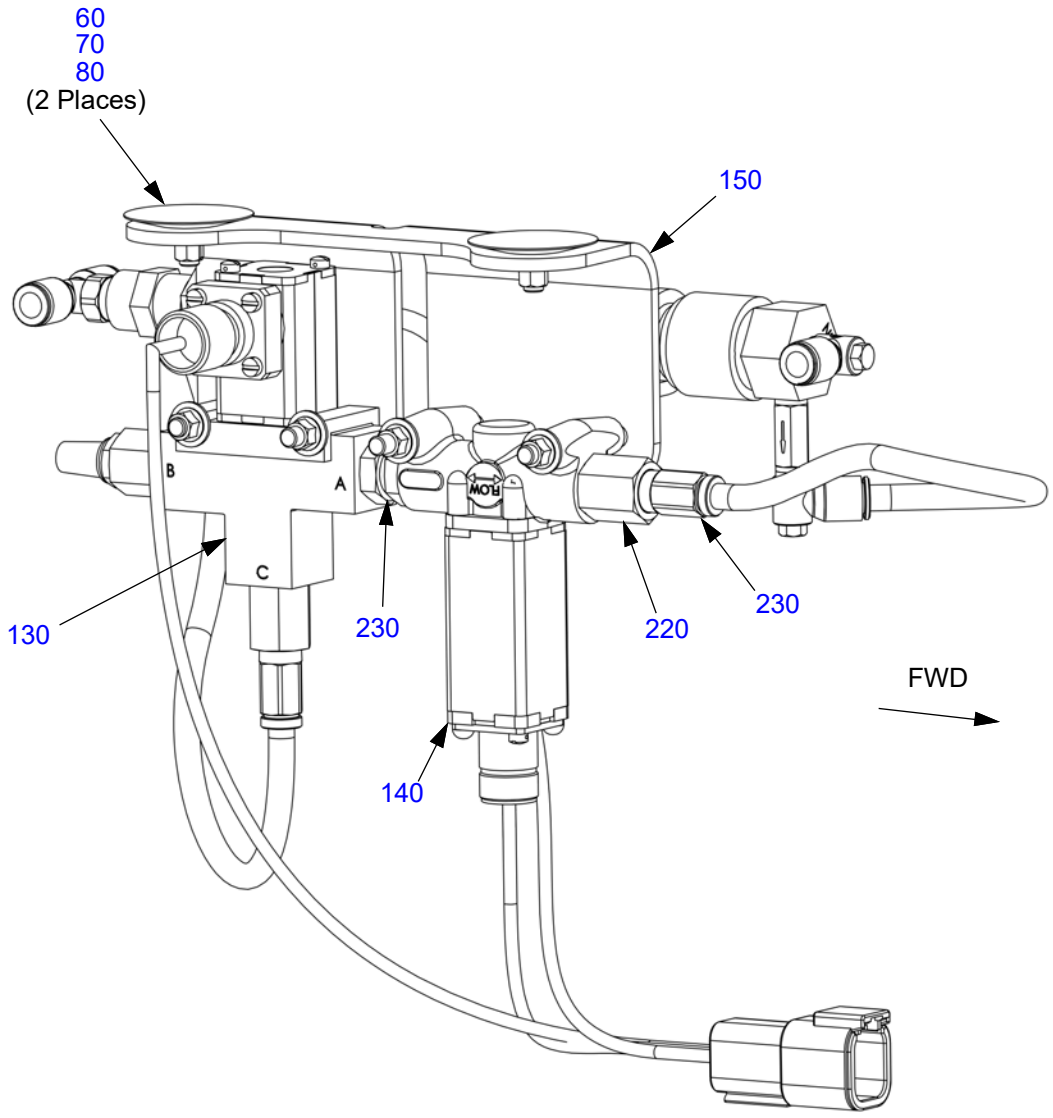

Figure 52-10.11: Door Seal System (Continued)

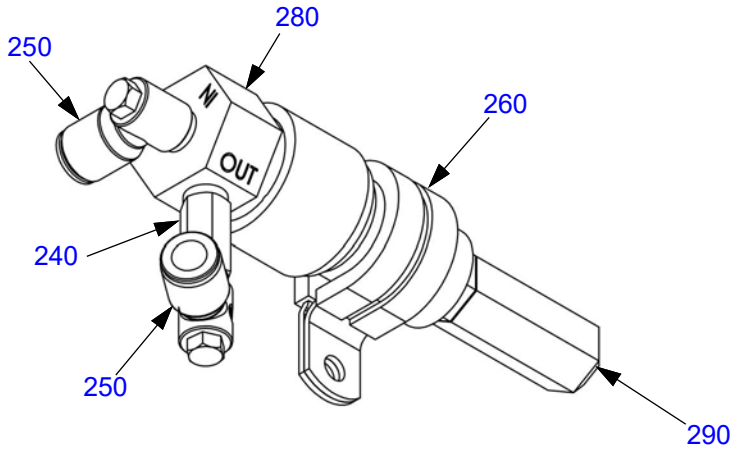

Regulator Assy. Style 1

F1

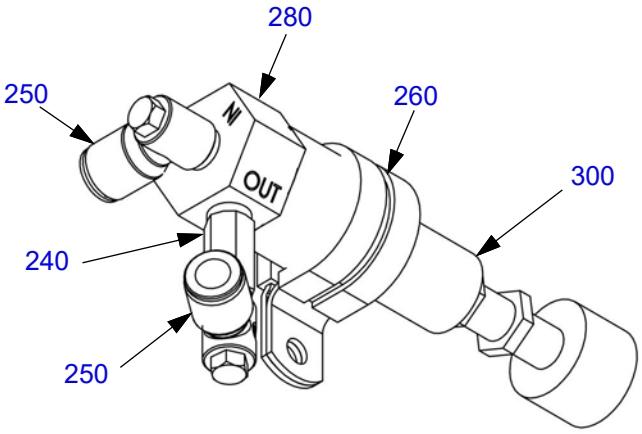

Regulator Assy. Style 2

F2

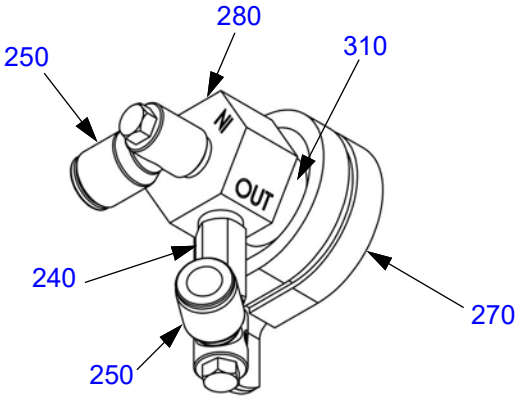

Regulator Assy. Style 3

F3

Figure 52-10.11: Door Seal System (Continued)

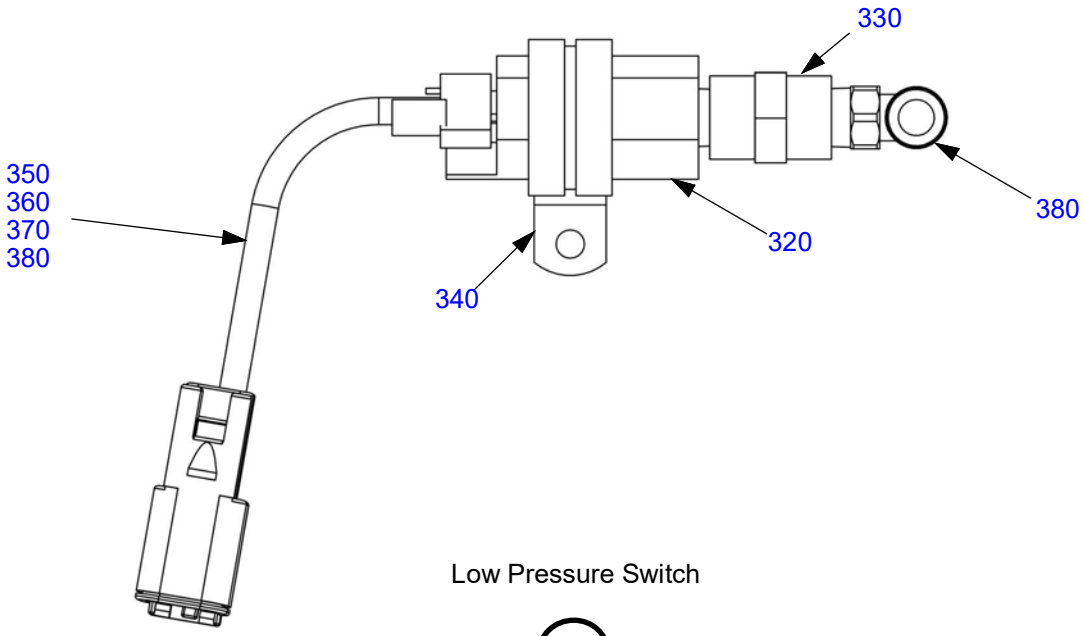

Low Pressure Switch

G1

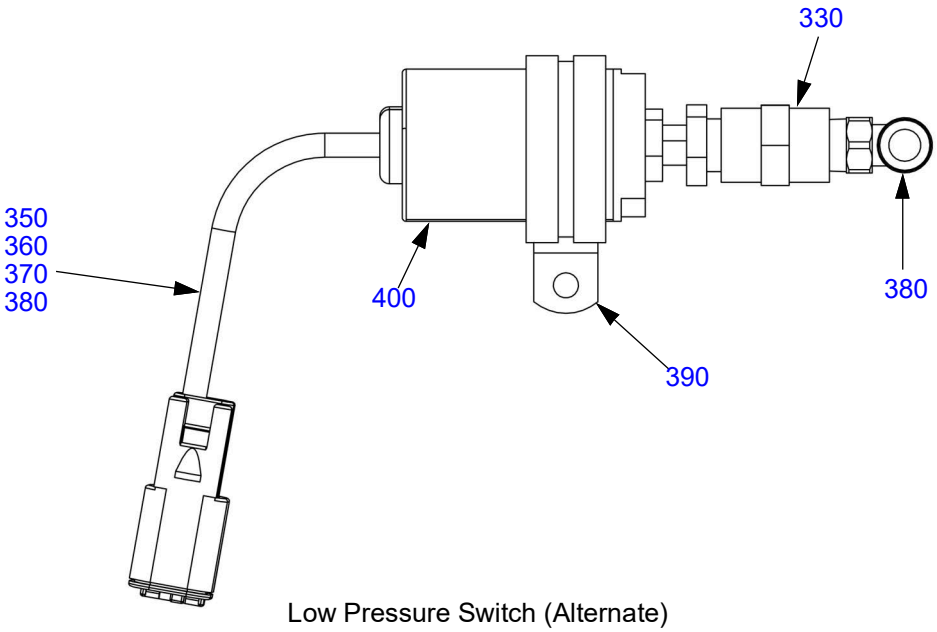

Low Pressure Switch (Alternate)

G2

Figure 52-10.11: Door Seal System (Continued)

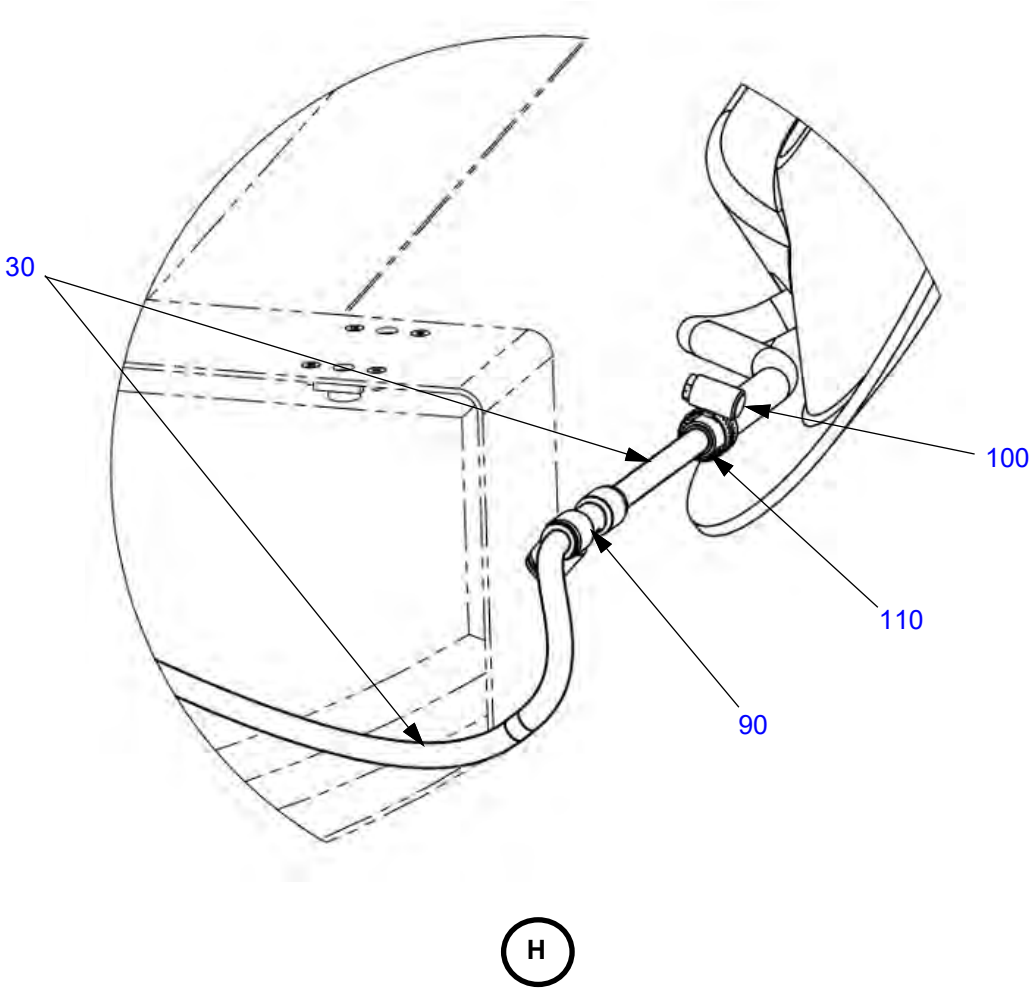

Table 52-10.11: Door Seal System

Figure Item Number	Part Number	Part Name	Effectivity Code	Amount in Assy.
10	4 GTX-SS	Parker: Fitting, 1/4 JIC To Female 1/8 NPT	K003 and On	1
20	3103 56 11	Parker: Male Run Tee, 1/8 NPT, 1/4 Tube	K003 and On	1
30	HU-4-RED-0100	Parker: Tubing, Polyurethane, 1/4 OD	K003 and On	A/R
40	PK99005368	Seal, Door, Inflatable	K003 and On	1
50	PK99005375	Door Seal, Passive, Main Door	K003 and On	1
60	CB4000 E 3 CR 8	Stud, Glass Base, .500 Long	K003 and On	2
	CB4000 E 3 CRA 8 (Alternate)	Stud, Glass Base, .500 Long		
	M1-RB23-10-32x0.50 (Alternate)	Stud, Bonded, Male, 10/32, .50, Mild Steel		
	SS-M1-RB23-10-32x0.50 (Alternate)	Stud, Bonded, Male, 10/32, .500, Stainless Steel		
70	NAS1149F0332P	Washer, Flat #10 x .032	K003 and On	2
80	MS21042L3	Nut, Self-locking, 450°, Reduced #10-32	K003 and On	2
90	3104 56 00	Tee, .25x.25, Parker, Legris	K003 and On	1
100	97HC-3	Parker: Stainless Steel Worm Drive Clamp, 3/16 To 5/8	K003 and On	1
110	22-4-6	Parker: Union Reducer, 1/4x3/8 OD Tube, .170x.250 ID Tube	K003 and On	1
120	PK52300008	Door Seal, Hinge Component	K003 and On	1
130	PK99005279	Solenoid Valve, 3-way 2 Positions	K003 and On	1
140	PK99005278	2-way Solenoid Valve, Normaly Open, 1/4	K003 and On	1
150	PK36101201	Valve Bracket, Door Seal	K003 and On	1
160	NAS1149F0332P	Washer, Flat #10 x .032	K003 and On	8
170	MS21042L3	Nut, Self-locking, 450°, Reduced #10-32	K003 and On	4

Figure Item Number	Part Number	Part Name	Effectivity Code	Amount in Assy.
180	101-0250062-2TC	Tubing, Red, Pneumatic - PTFE (Parker Hannifin)	K003 and On	A/R
	N-4-040-RED (Alternate)	Tubing, Red, Pneumatic - Nylon (Parker Hannifin)		
190	EM12	Parker: Muffler, 1/8 NPT (Only use with item)	K003 and On	1
	EM25 (Alternate)	Parker: Muffler, 1/4 NPT (Only use with item 230)		
200	AN3-16A	Bolt, 10-32 x 1-25/32" Undrilled	K003 and On	2
210	AN3-14A	Bolt, 10-32 x 1-17/32" Undrilled	K003 and On	2
220	4-1/8 F5OG-SS	Parker: Female Pipe Adapter, SAE-ORB/ NPFT, 7/16 to 1/8 (Only use with item 190 and 250)	K003 and On	3
	4-1/4 F5OG-SS (Alternate)	Pipe and Port Reducer, Expander, Conversion F5OG (Only use with item 230)		
230	4 F5OHAO-SS	Parker: Straight Thread Union, SAE-ORB, 1/4	K003 and On	1
240	3175 56 11	Male Stud Coupling, 1/4 x 1/8 NPT, Parker, Legris (Only use with item 220)	K003 and On	2
	3175 56 14 (Alternate)	Parker Fitting LF-3000 (Only use with item 230)		
250	PK99005274	Check Valve, 10-32, Male-female	K003 and On	1
	3118 56 20	Banjo, .25 X 10-32, Parker, Legris	K003 and On	2
260	AS21919WDG12	Clamp, Loop Type, Cushioned, Ø .750	K003 and On	1
270	AS21919WDG16	Clamp, Loop Type, Cushioned, Ø 1.000	K003 and On	1
280	PK36101012	Manifold, #10-32 Inlet And Outlet	K003 and On	1
290	PK99005275	High Performance Mini Regulator	K003 and On	1
300	PK99005277	Air Regulator, Subminiature, Control Air	K003 and On	1
310	PK99005281	Regulator, Air, Miniature, Beswick	K003 and On	1
320	PK99005273	Low Pressure Switch	K003 and On	1
330	AN910-1D	Coupling, Pipe	K003 and On	1

Figure Item Number	Part Number	Part Name	Effectivity Code	Amount in Assy.
340	AS21919WDG13	Clamp, Loop Type, Cushioned, Ø .813	K003 and On	1
350	Roundit 2000NX 5-5	Sleeving, Self-wrapping, Heat And Fluid Resistant, Ø 3/16" 6"	K003 and On	6”
360	A-A-52080-B-3	Tape, Lacing, Nylon, Size 3 , Finish B, Black	K003 and On	A/R
370	ATM04-2P-KIT01	Connector Kit, 2 Position Receptacle, Contacts, & Wedgelock	K003 and On	1
380	3108 56 11	Legris: Male Branch Tee, 1/4" Tube x 1/8" NPT, Push Connect	K003 and On	1
390	AS21919WDG18	Clamp, Loop Type, Cushioned, Ø 1.125	K003 and On	1
400	PK99005280	Low Pressure Switch, Pressure Controls Inc.	K003 and On	1

Figure 52-10.12: Door Handle

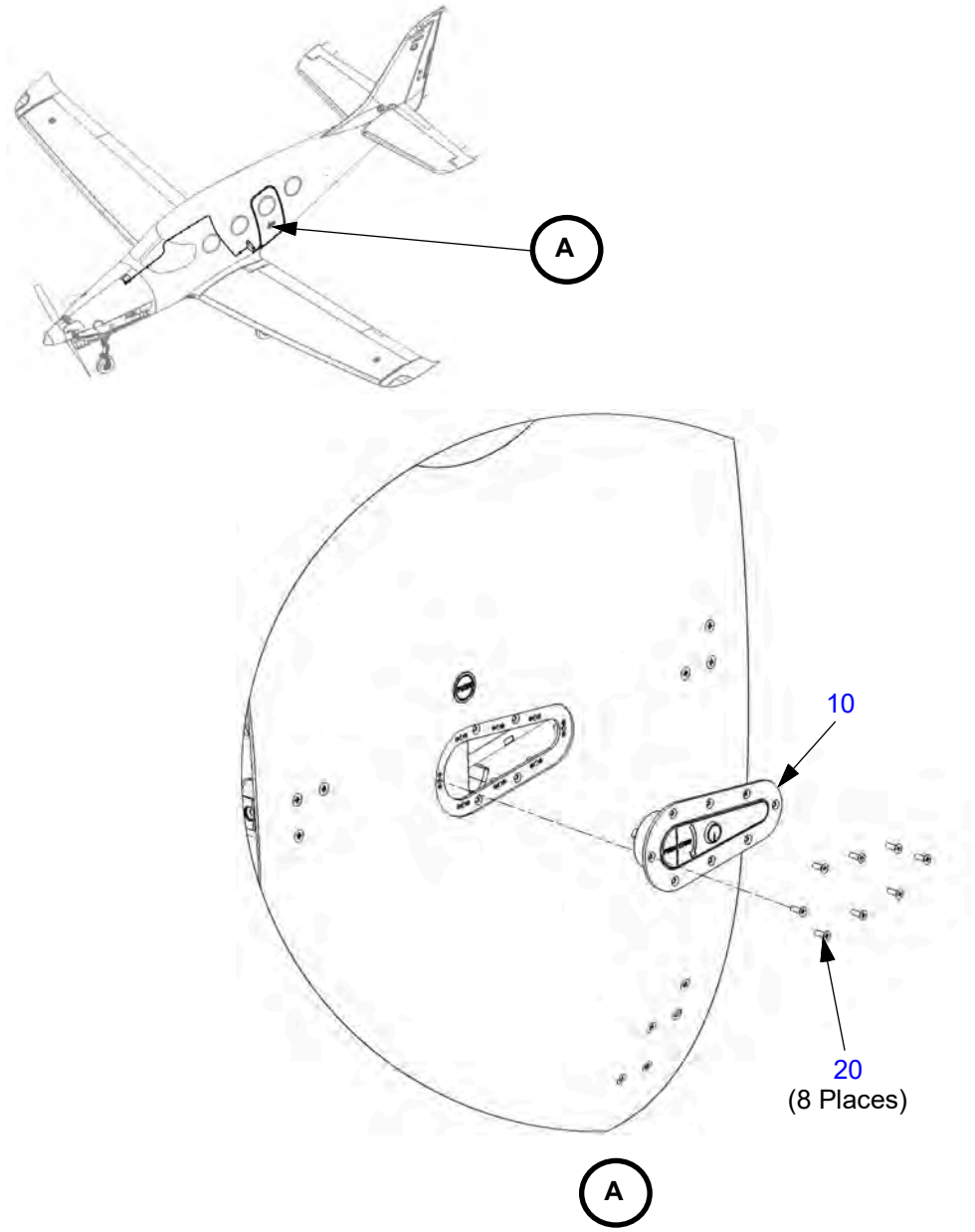

Table 52-10.12: Door Handle

Figure Item Number	Part Number	Part Name	Effectivity Code	Amount in Assy.
10	AK52109501	Assembly, Exterior Handle, Door	K003 and On	1
20	MS24694-S51	Screw, Machine, C'sunk Ø .190 x 19/32	K003 and On	8

Figure 52-10.13: Door Handle Mechanism

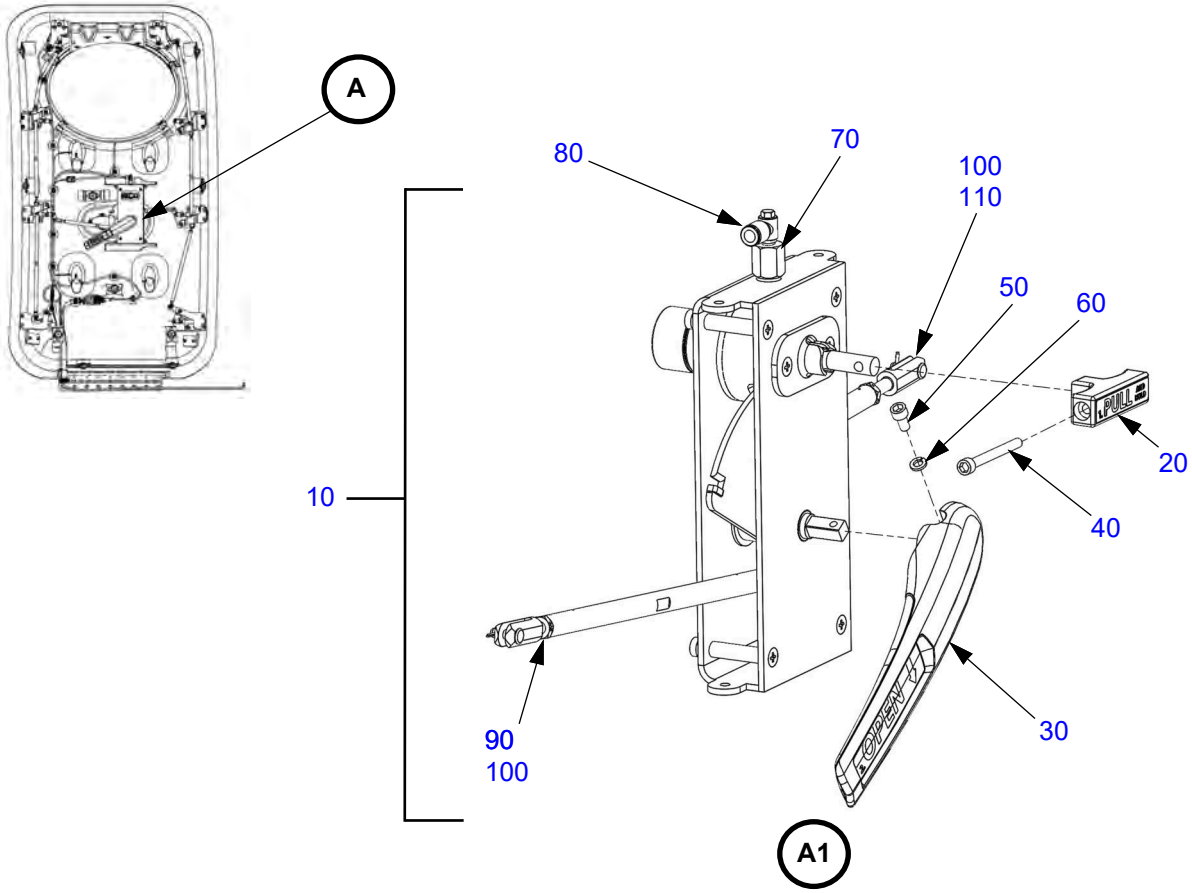

(SN: K003-K030)

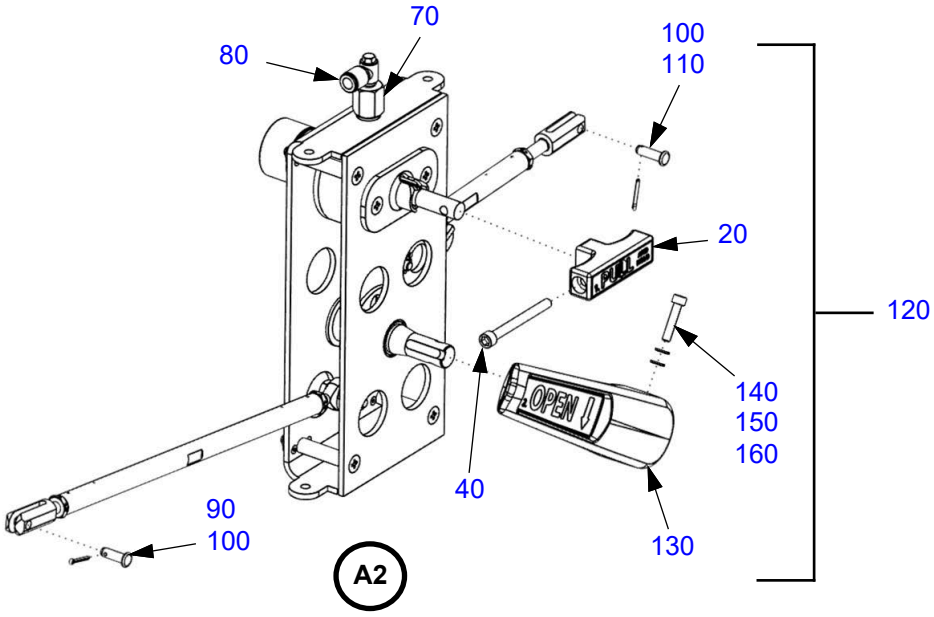

(SN: K031 and On)

Table 52-10.13: Door Handle Mechanism

Figure Item Number	Part Number	Part Name	Effectivity Code	Amount in Assy.
10	AK52108000	Door Locking Mechanism	K003-K030	1
20	AK52108007	Assembly, Interior Lock Release Handle	K003 and On	1
30	AK52108008	Assembly, Interior Handle, Cabin Door	K003-K030	1
40	NAS1351-3-32P	Screw, Socket Head Ø .190-32 x 2.000	K003 and On	1
50	NAS1352-3-6P	Screw, Socket Head .190-24 x .375	K003-K030	1
60	MS35338-43	Washer, Lock-spring, Ø.190	K003-K030	1
70	PK99007004	Door Seal Release Valve	K003 and On	1
80	3118 56 20	Banjo, .25 x 10-32, Parker, Legris	K003 and On	1
90	MS20392-2C15	Pin, Drilled Shank Ø .188 x 0.641	K003 and On	1
100	MS20392-2C17	Pin, Drilled Shank Ø .188 x 0.703	K003 and On	1
110	MS24665-132	Pin, Cotter, Cad Steel Ø .062 x .50	K003 and On	2
120	AK52108700	Door Locking Mechanism	K031 and On	1
130	AK52108010	Assembly. Interior Handle, Keyed, Cabin Door	K031 and On	1
140	NAS1352-08-13P	Screw, Socket Head .164-32 x .813	K031 and On	1
150	MS35338-42	Washer, Lock-Spring, Ø.164	K031 and On	1
160	NAS620C8	Washer, Reduced O.D., Cres, .169 I.D x .304 O.D.	K031 and On	1

This Page Intentionally Left Blank

EMERGENCY DOOR

Figure 52-20.1: Emergency Exit Door

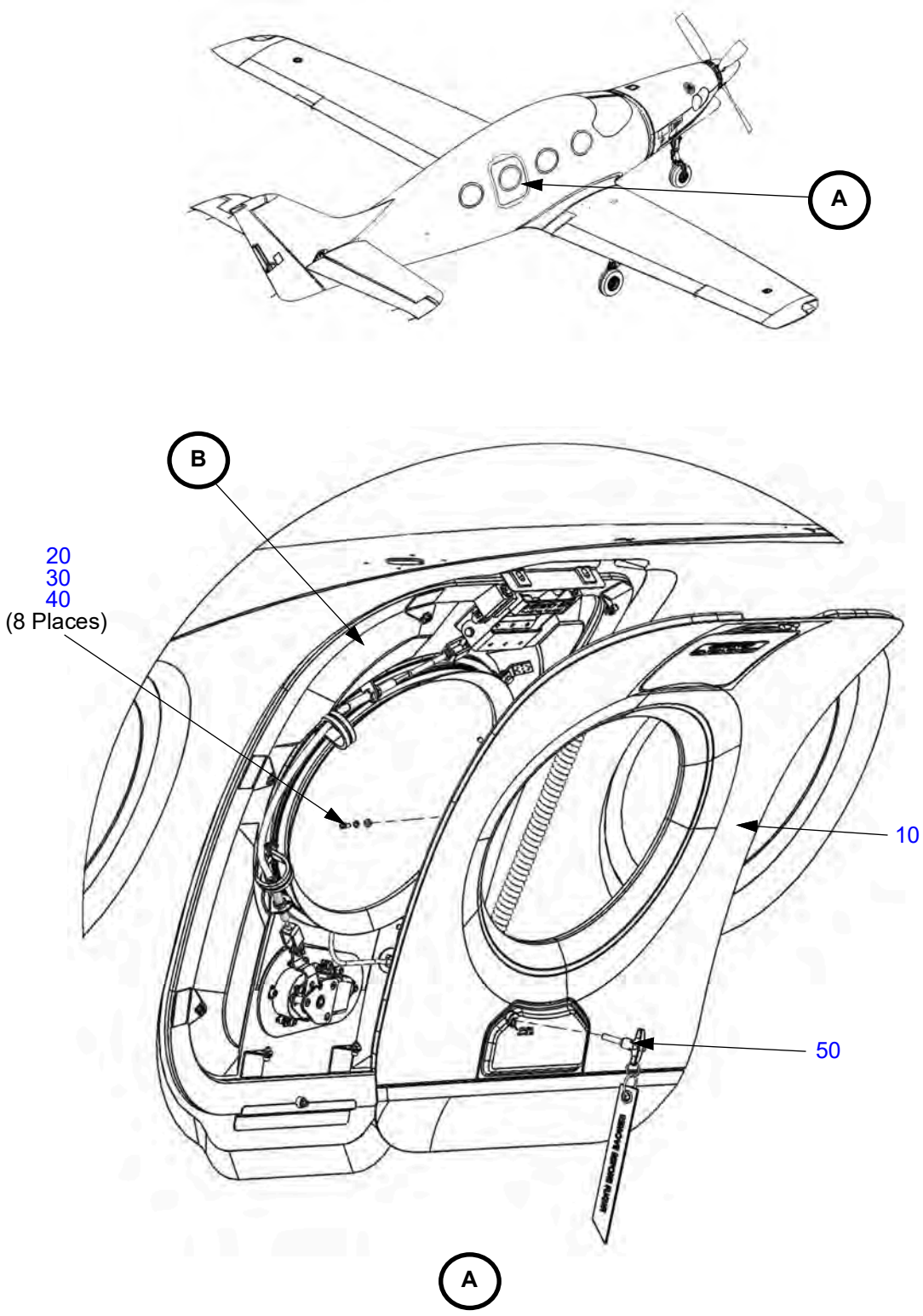

Figure 52-20.1: Emergency Exit Door (Continued)

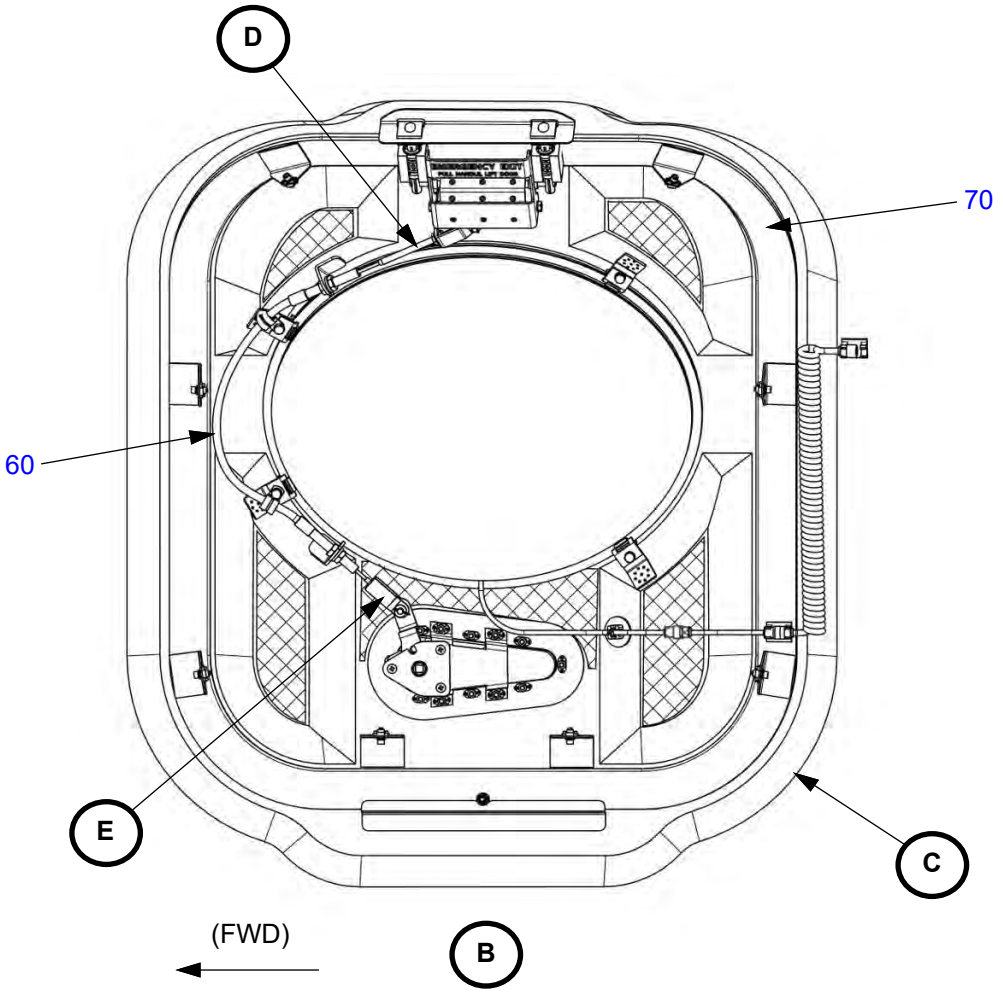

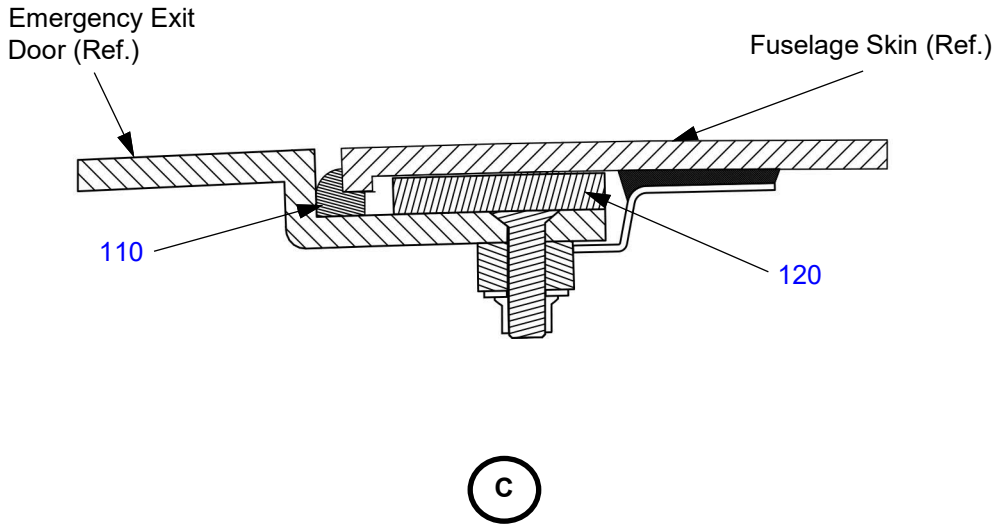

Figure 52-20.1: Emergency Exit Door (Continued)

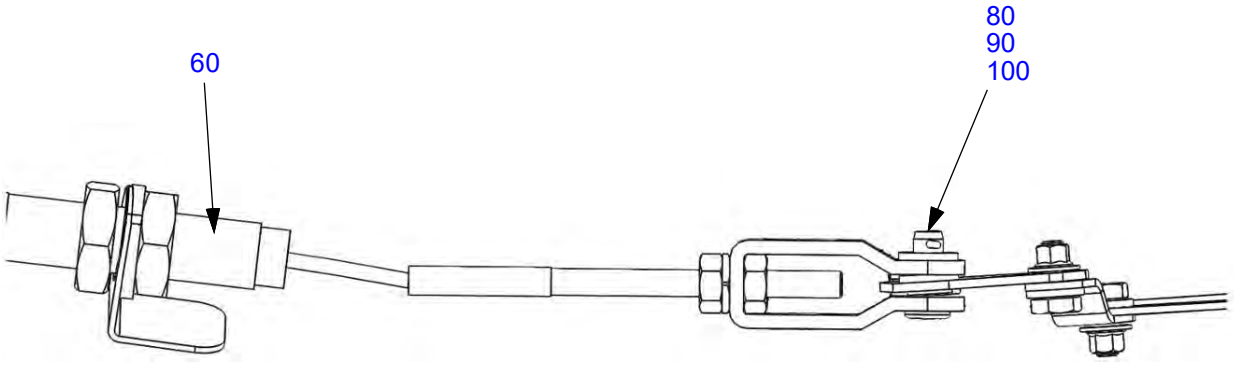

D

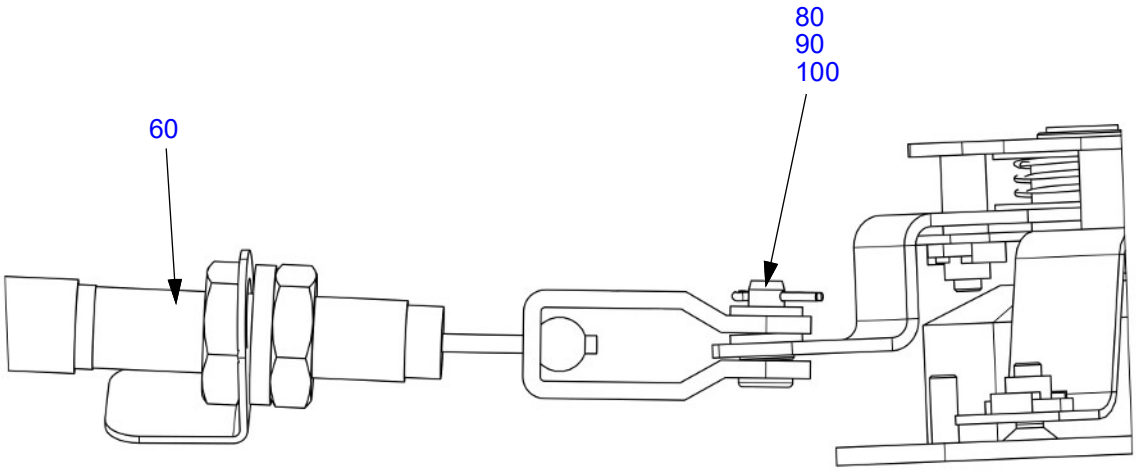

E

Table 52-20.1: Emergency Exit Door

Figure Item Number	Part Number	Part Name	Effectivity Code	Amount in Assy.
10	AK25222301	Panel, Emergency Door Assembly	K003 and On	1
20	NAS1352-08-8P	Screw, Socket Head .164-32 x .500	K003 and On	8
30	MS35338-42	Washer, Lock-spring, Ø.164	K003 and On	8
40	NAS1149FN816P	Washer, Flat #8 x .016	K003 and On	8
50	FK52202010	Pin Assy, Remove Before Flight, Emergency Door	K003 and On	1
60	AK52203000	Cable Assy, Emergency Escape	K003 and On	1
70	AK52202000	Bonded Assy, Emergency Escape Door	K003 and On	1
80	MS20392-3R17	Pin, Drilled Shank, CRES Ø .250 x 0.734	K003 and On	2
90	NAS1149F0463P	Washer, Flat 1/4 x .063	K003 and On	2
100	MS24665-132	Pin, Cotter, Cad Steel Ø .062 x .50	K003 and On	2
110	PK52202014	Seal, Emergency Escape Door	K003 and On	1
120	PK52202012	Gasket, Emergency Escape Door	K003 and On	1

CHAPTER
53

Fuselage

This Page Intentionally Left Blank

Table of Contents
and
List of Effective Pages

Chapter/Section	Page Number	Effective Date
53-Title	Page 1	03 Apr 2020
53-Title	Page 2	03 Apr 2020
53-LOEP	Page 1	13 Jan 2023
53-LOEP	Page 2	03 Apr 2020
53-TOC	Page 1	13 Jan 2023
53-TOC	Page 2	03 Apr 2020
Floor Access Panels		
53-20	Page 1	03 Apr 2020
53-20	Page 2	03 Apr 2020
53-20	Page 3	03 Apr 2020
53-20	Page 4	03 Apr 2020
53-20	Page 5	03 Apr 2020
53-20	Page 6	03 Apr 2020
53-20	Page 7	03 Apr 2020
53-20	Page 8	03 Apr 2020
Fuselage Access Panels		
53-30	Page 1	13 Jan 2023
53-30	Page 2	13 Jan 2023
53-30	Page 3	13 Jan 2023
53-30	Page 4	13 Jan 2023
Seat Rails		
53-40	Page 1	03 Apr 2020
53-40	Page 2	03 Apr 2020
53-40	Page 3	03 Apr 2020
53-40	Page 4	03 Apr 2020
53-40	Page 5	03 Apr 2020
53-40	Page 6	03 Apr 2020
53-40	Page 7	03 Apr 2020
53-40	Page 8	03 Apr 2020

This Page Intentionally Left Blank

CHAPTER 53

Table of Contents

List of Effective Pages ..... 53-LOEP / Page 1
Table of Contents ..... 53-TOC / Page1

Paragraph **Page Number**

Floor Access Panels

Figure 53-20.1: Cockpit Floor and Access Panels ..... 53-20 / Page 1
Table 53-20.1: Cockpit Floor and Access Panels ..... 53-20 / Page 4
Figure 53-20.2: Cabin Floor Panels ..... 53-20 / Page 5
Table 53-20.2: Cabin Floor Panels ..... 53-20 / Page 7

Fuselage Access Panels

Figure 53-30.1: Fuselage Access Panels ..... 53-30 / Page 1
Table 53-30.1: Fuselage Access Panels ..... 53-30 / Page 3

Seat Rails

Figure 53-40.1: Cockpit Seat Rails ..... 53-40 / Page 1
Table 53-40.1: Cockpit Seat Rails ..... 53-40 / Page 3
Figure 53-40.2: Cabin Seat Rails ..... 53-40 / Page 4
Table 53-40.2: Cabin Seat Rails ..... 53-40 / Page 7

This Page Intentionally Left Blank

FLOOR ACCESS PANELS

Figure 53-20.1: Cockpit Floor and Access Panels

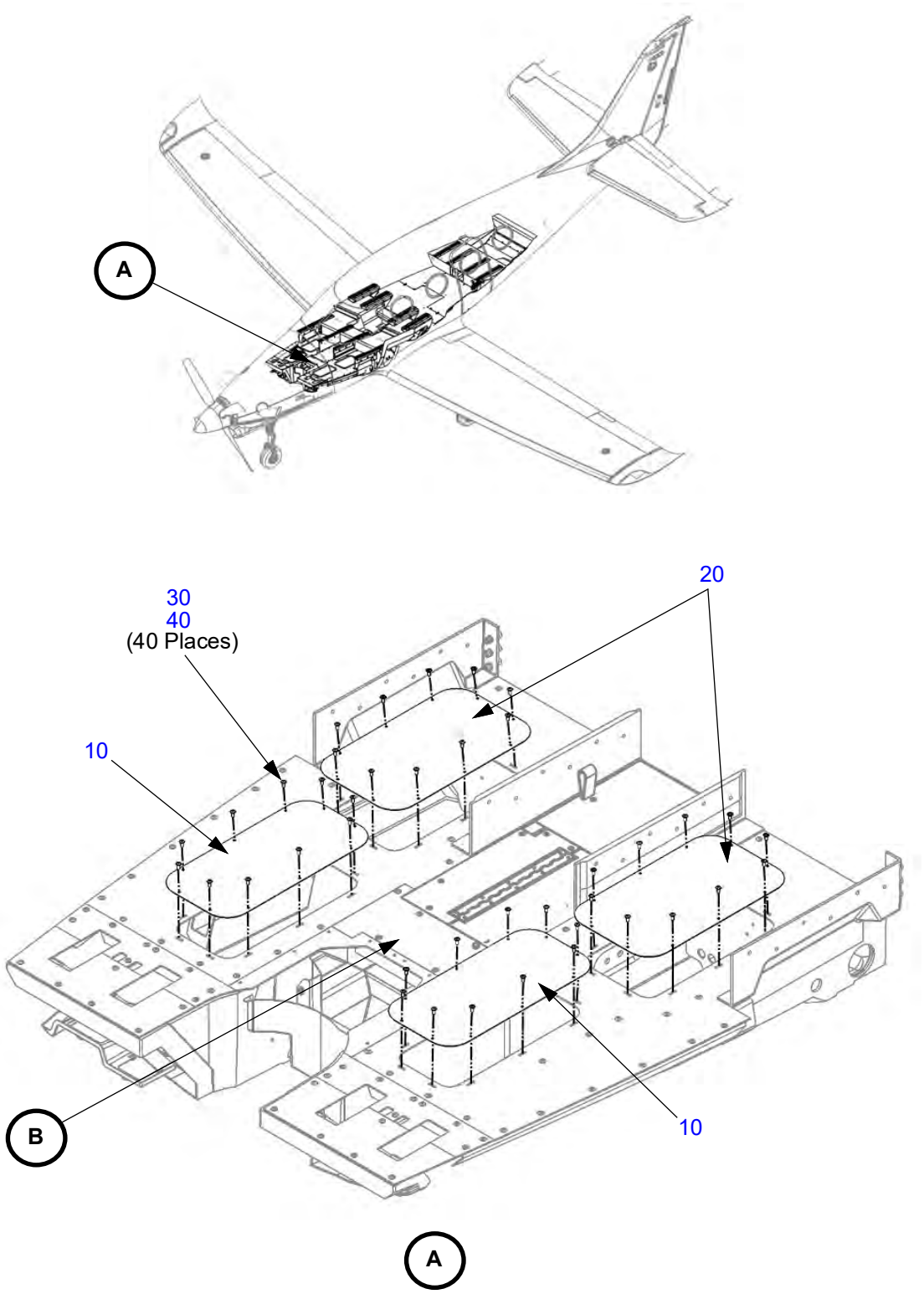

Figure 53-20.1: Cockpit Floor and Access Panels (Continued)

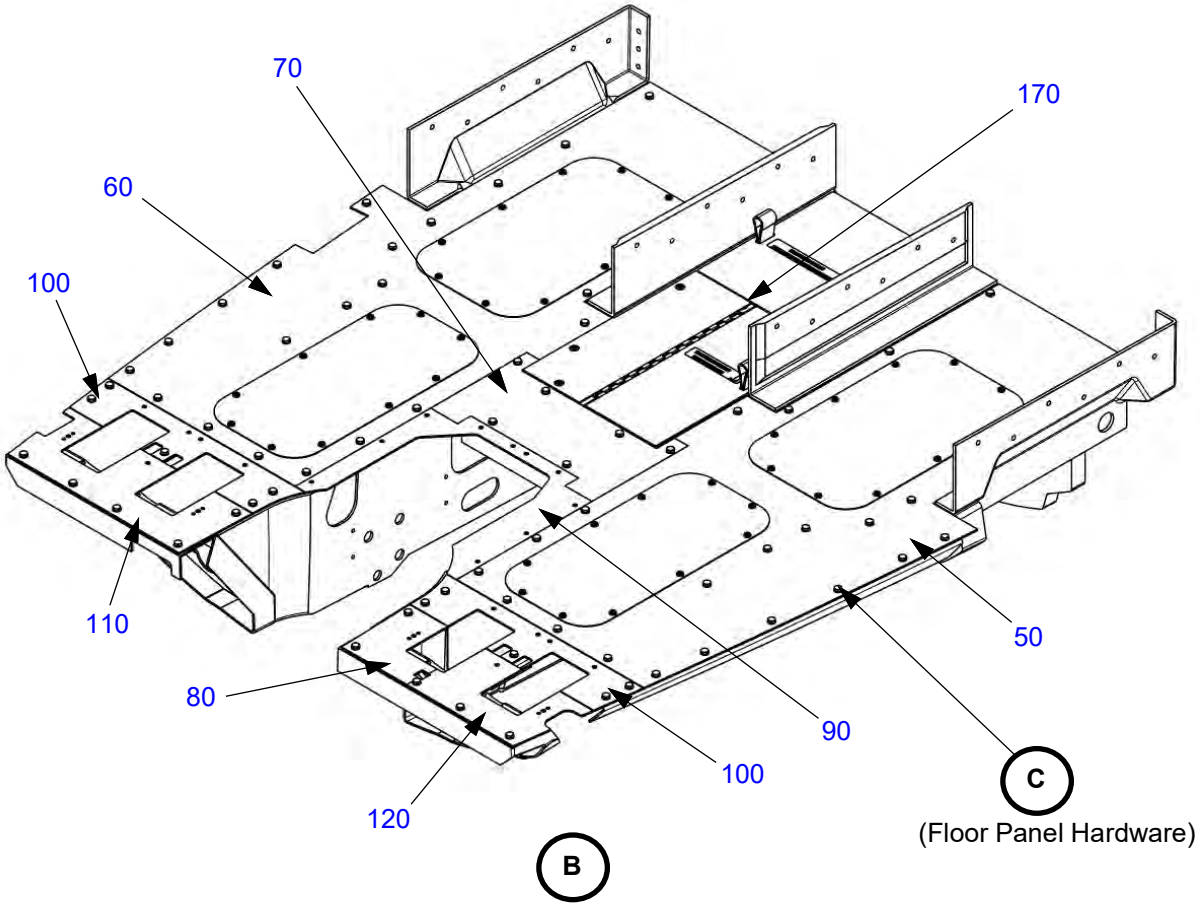

Figure 53-20.1: Cockpit Floor and Access Panels (Continued)

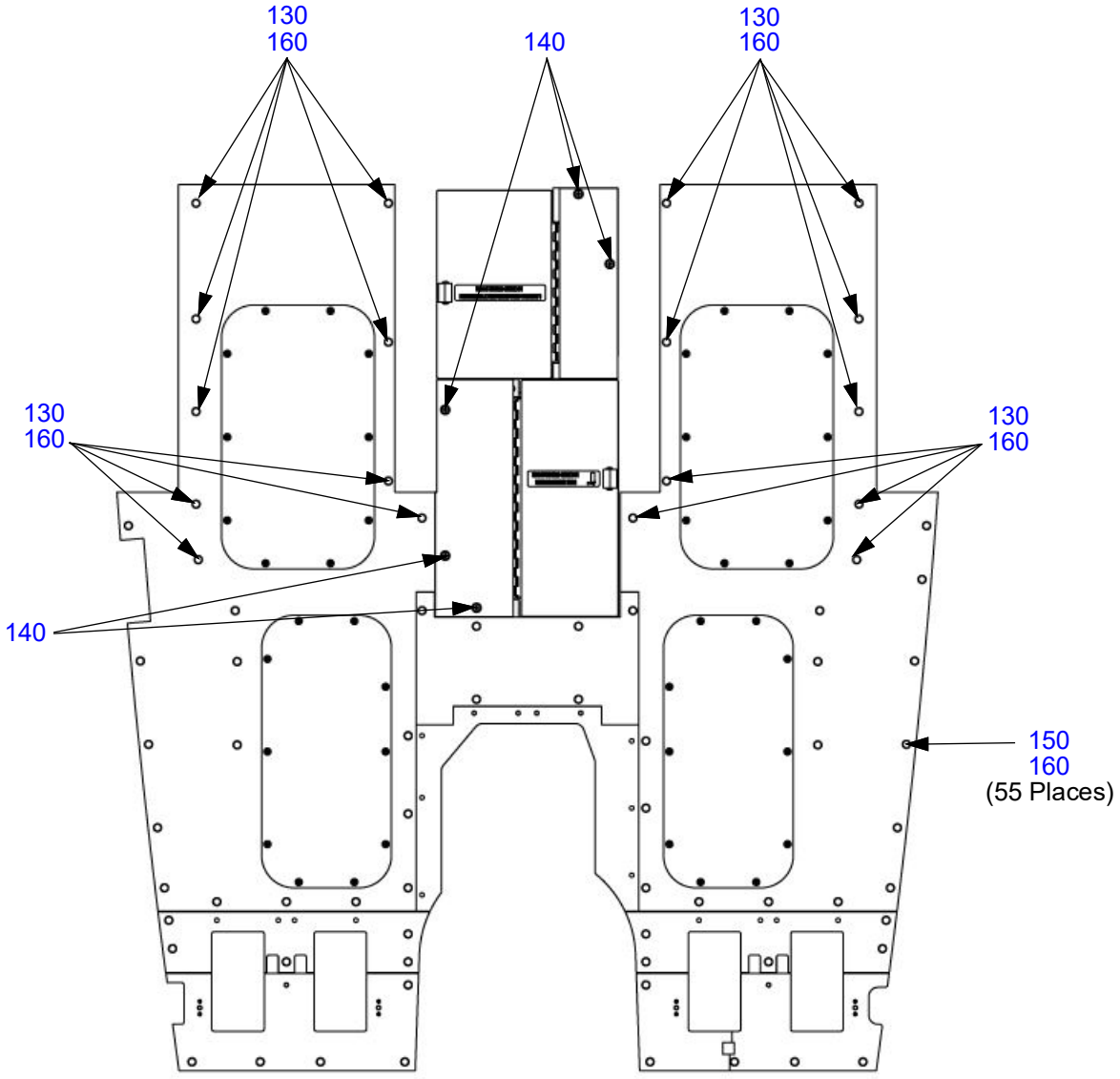

Table 53-20.1: Cockpit Floor and Access Panels

Figure Item Number	Part Number	Part Name	Effectivity Code	Amount in Assy.
10	PK53301006	Access Panel, Floor Fwd	K003 and On	2
20	PK53301005	Access Panel, Floor Main	K003 and On	2
30	MS27039-0807	Screw, Pan Head, 164 x 469 LG.	K003 and On	40
40	NAS1149FN816P	Washer, Flat #8 x .016	K003 and On	40
50	AK53301001	Floor, Crew Left, Assy	K003 and On	1
60	AK53301002	Floor, Crew Right, Assy	K003 and On	1
70	PK53301003	Floor, Crew Center	K003 and On	1
80	AK53301020	Plate, Assembly, Rudder Pedal, Floor, Left Inboard	K003 and On	1
90	PK53301013	Floor, Throttle Quad	K003 and On	1
100	PK53301016	Plate, Rudder Pedal, Floor, Right	K003 and On	2
110	AK53301018	Plate, Assembly, Rudder Pedal, Floor, Right Front	K003 and On	1
120	AK53301013	Plate, Assembly, Rudder Pedal, Floor, Left Front	K003 and On	1
130	AN3-5A	Bolt, 10-32 x 21/32" Undrilled	K003 and On	18
140	MS24694-S49	Screw, Machine, C'sunk Ø .190 x 15/32	K003 and On	5
150	AN3-4A	Bolt, 10-32 x 17/32" Undrilled	K003 and On	55
160	NAS1149F0332P	Washer, Flat #10 x .032	K003 and On	73
170	AK53301017	Floor Assy, Crew, Center	K003 and On	1

Figure 53-20.2: Cabin Floor Panels

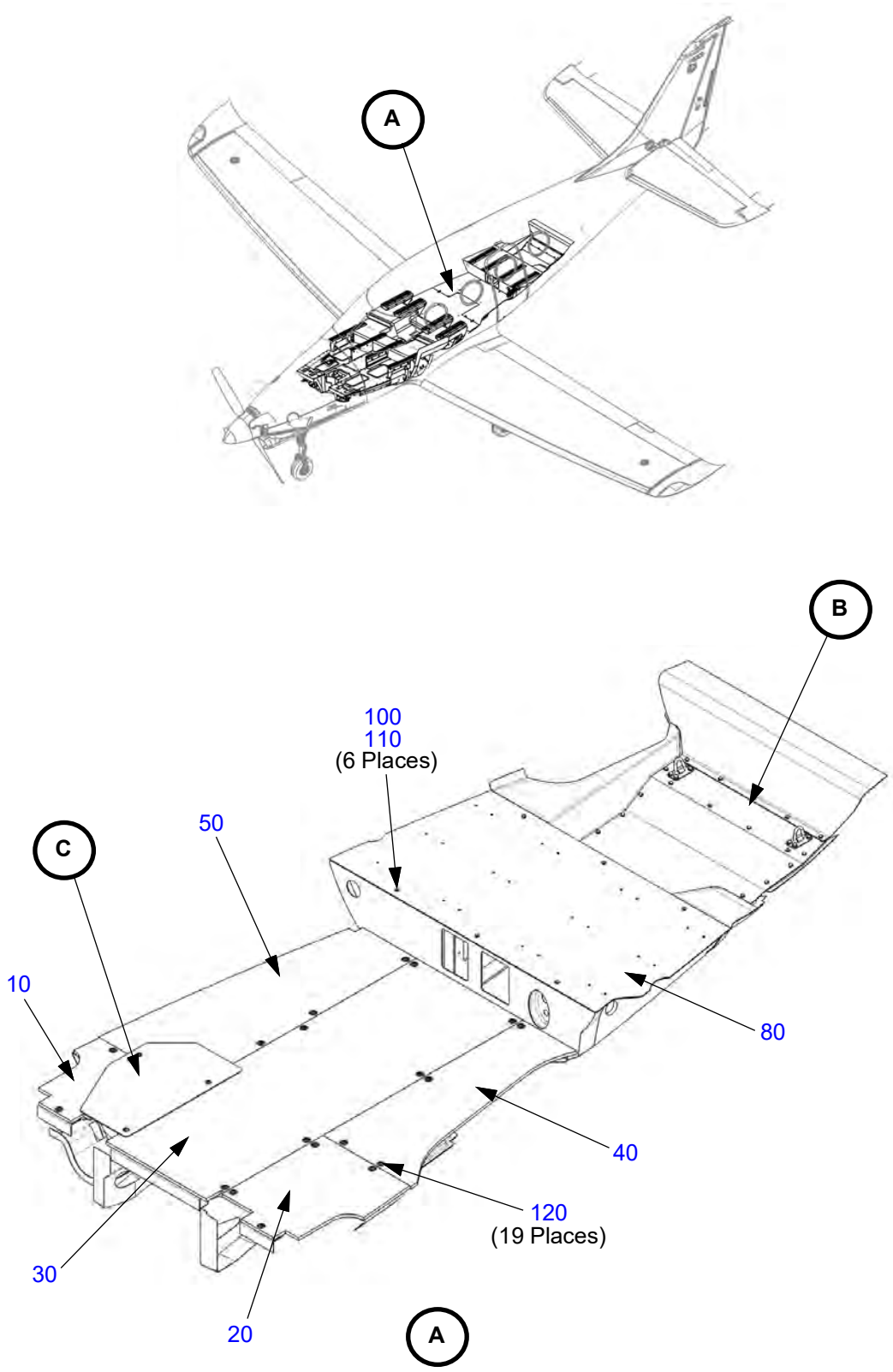

Figure 53-20.2: Cabin Floor Panels (Continued)

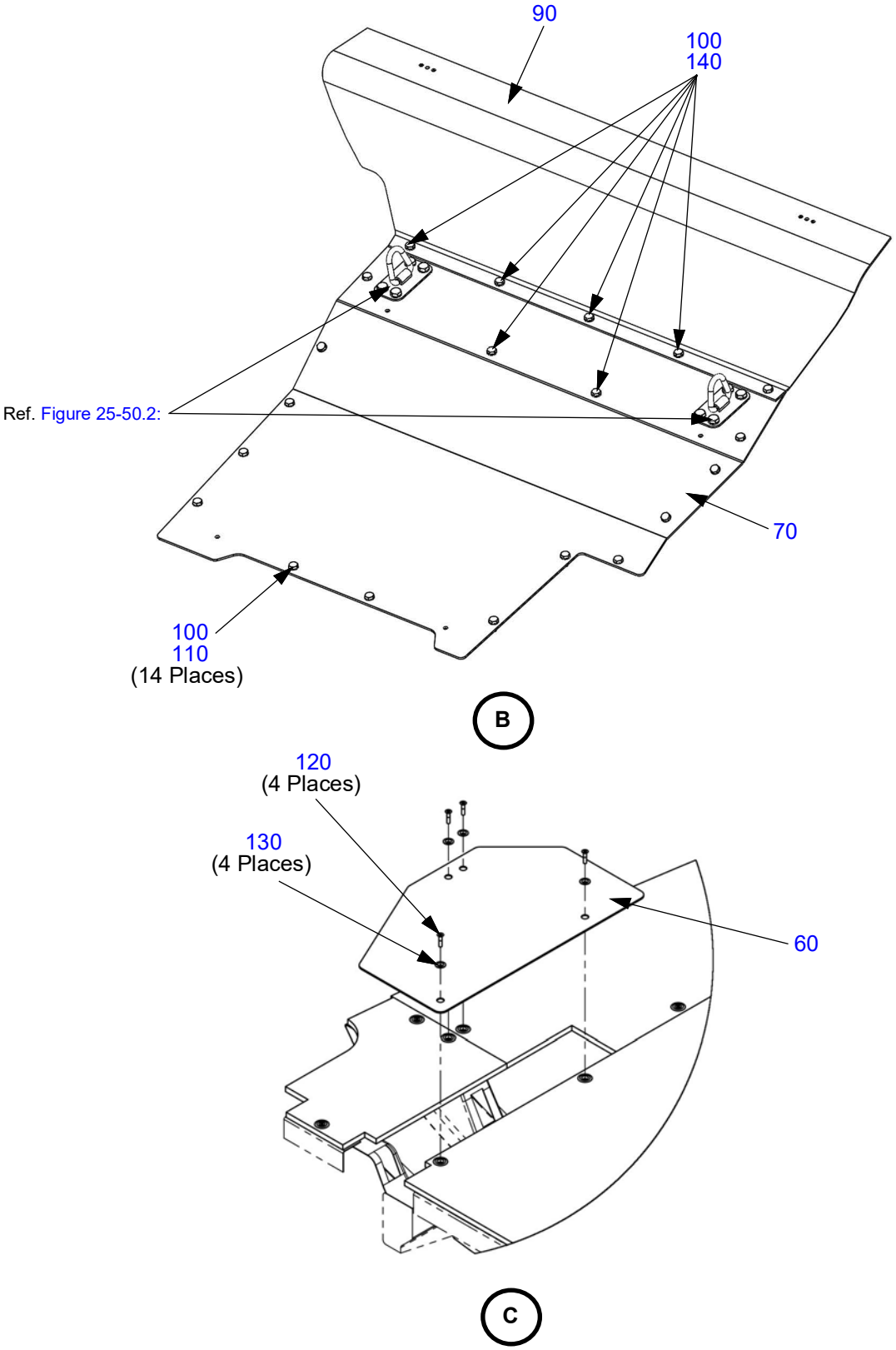

Table 53-20.2: Cabin Floor Panels

Figure Item Number	Part Number	Part Name	Effectivity Code	Amount in Assy.
10	AK53302004	Floor Panel Assy, Fwd Right, Passenger	K003 and On	1
20	AK53302005	Floor Panel Assy, Fwd Left, Passenger	K003 and On	1
30	AK53302006	Floor Panel Assy, Center, Passenger	K003 and On	1
40	AK53302007	Floor Panel Assy, Aft Left, Passenger	K003 and On	1
50	AK53302008	Floor Panel Assy, Aft Right, Passenger	K003 and On	1
60	PK53302010	Floor Spanner, Fwd Right, Passenger	K003 and On	1
70	AK53302101	Baggage Floor Panel, Nut Plate Assy	K003 and On	1
80	AK53302003	Assembly, Floor, Passenger, Aft	K003 and On	1
90	AK53302102	Assembly, Baggage Floor Closeout	K003 and On	1
100	AN3-4A	Bolt, 10-32 x 17/32" Undrilled	K003 and On	26
110	NAS1149F0316P	Washer, Flat #10 x .016	K003 and On	20
120	MS24694-S55	Screw, Machine, C'sunk Ø .190 x 27/32	K003 and On	23
130	NAS1169C10L	Washer, Dimpled, CRES No. 10 x .016	K003 and On	4
140	NAS1149F0332P	Washer, Flat #10 x .032	K003 and On	6

This Page Intentionally Left Blank

FUSELAGE ACCESS PANELS

Figure 53-30.1: Fuselage Access Panels

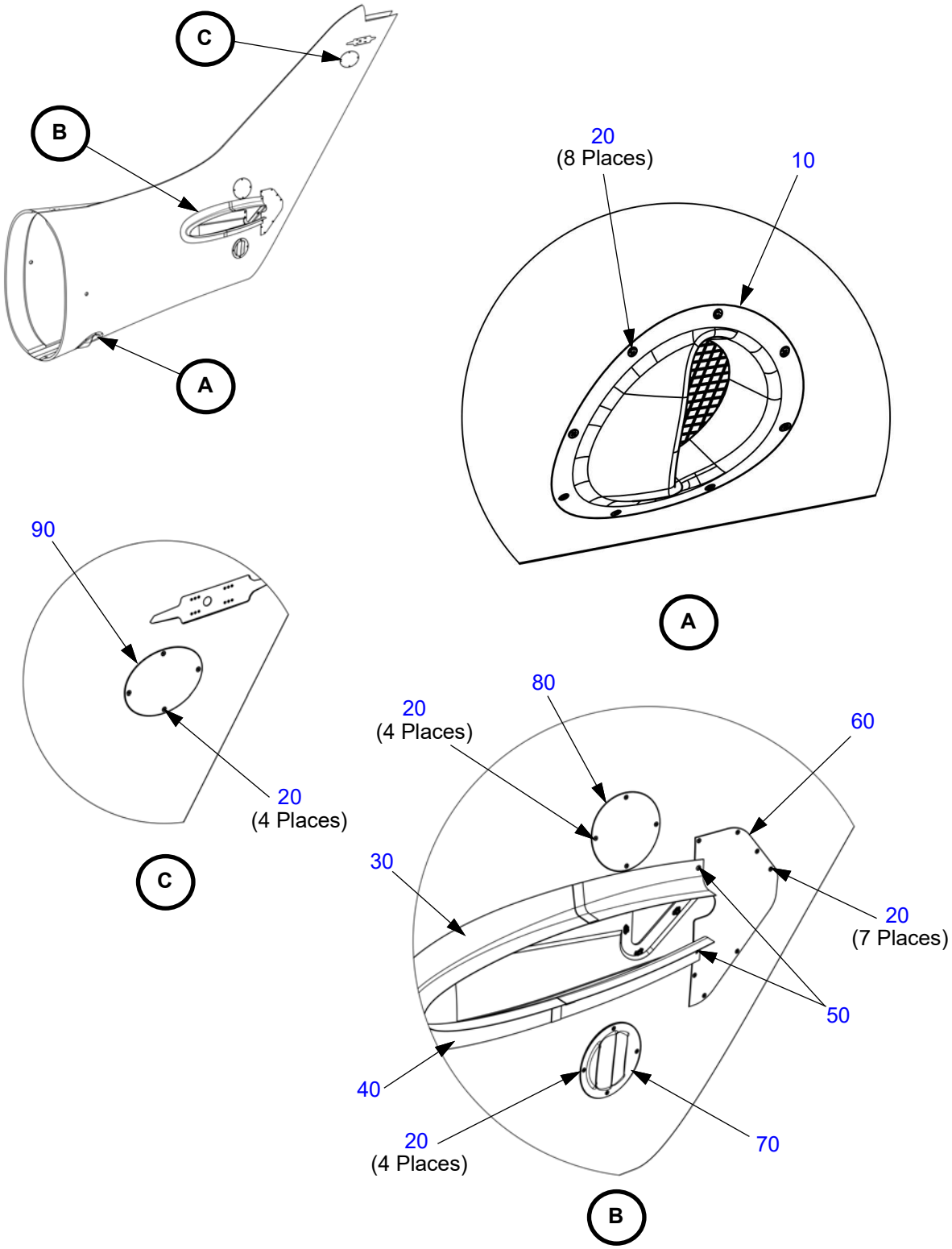

Figure 53-30.1: Fuselage Access Panels (Continued)

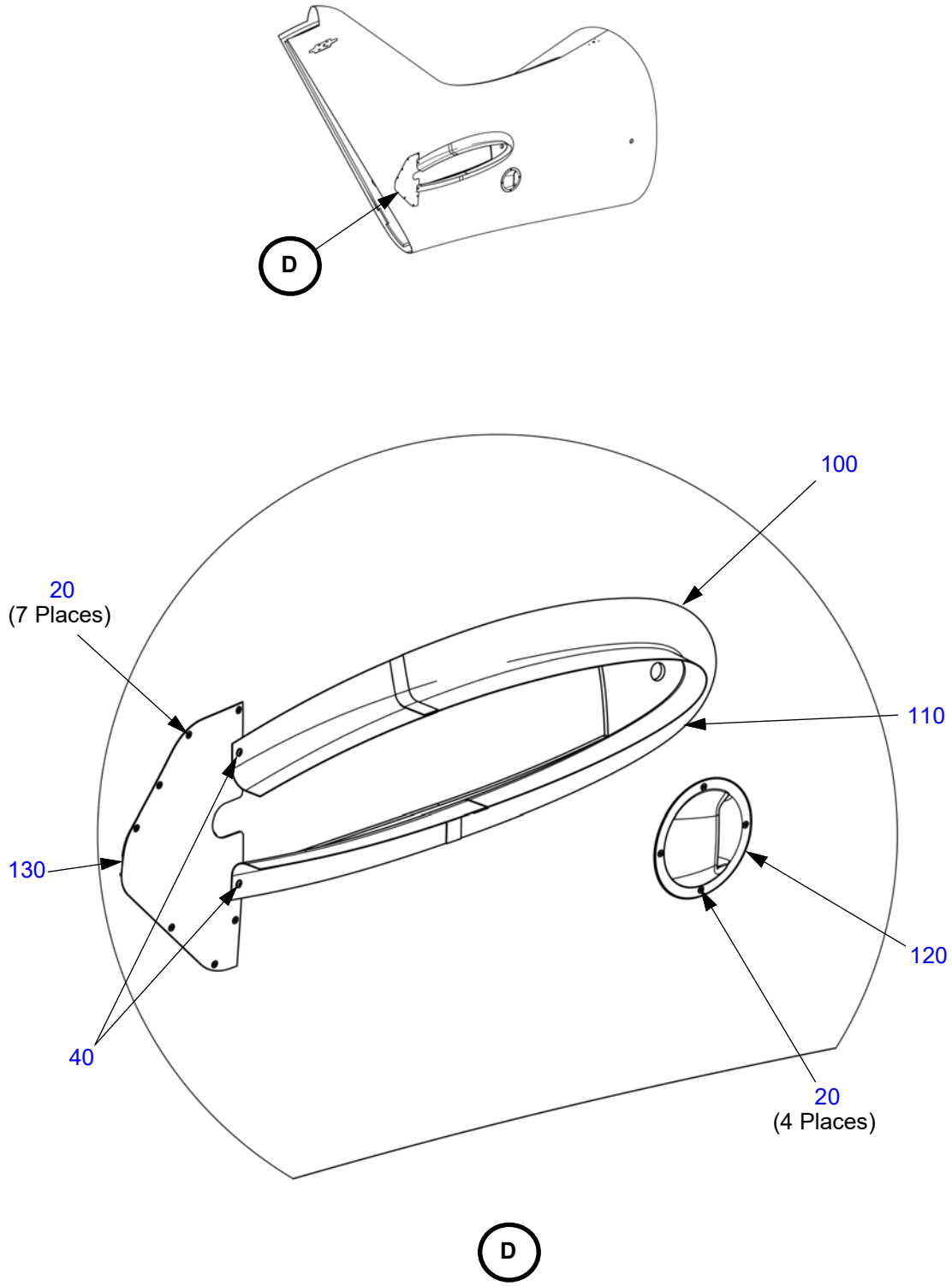

Table 53-30.1: Fuselage Access Panels

Figure Item Number	Part Number	Part Name	Effectivity Code	Amount in Assy.
10	AK53303001	A/C Outlet Assy	K003 and On	1
20	MS24694-S50	Screw, Machine, C'sunk Ø .190 x 17/32	K003 and On	38
30	PK54200003	Fairing, Horizontal, Aft-top, Left	K003 and On	1
40	PK54200005	Fairing, Horizontal, Aft-bottom, Left	K003 and On	1
50	AN525-10R10	Screw, Washer Head, .190 x .625 Lg.	K003 and On	4
60	PK53303003	Panel, Access, Horizontal, Left	K003 and On	1
70	PK53303002	Panel, Access, Louvered	K003 and On	1
80	PK53303005	Panel, Access, Over-horizontal	K003 and On	1
90	PK53303007	Panel, Access, Magnetometers	K003 and On	1
100	PK54200004	Fairing, Horizontal, Aft-top, Right	K003 and On	1
110	PK54200006	Fairing, Horizontal, Aft-bottom, Right	K003 and On	1
120	PK53303010	Inlet, A/C	K003 and On	1
130	PK53303004	Access Panel, Horizontal, Right	K003 and On	1

This Page Intentionally Left Blank

SEAT RAILS

Figure 53-40.1: Cockpit Seat Rails

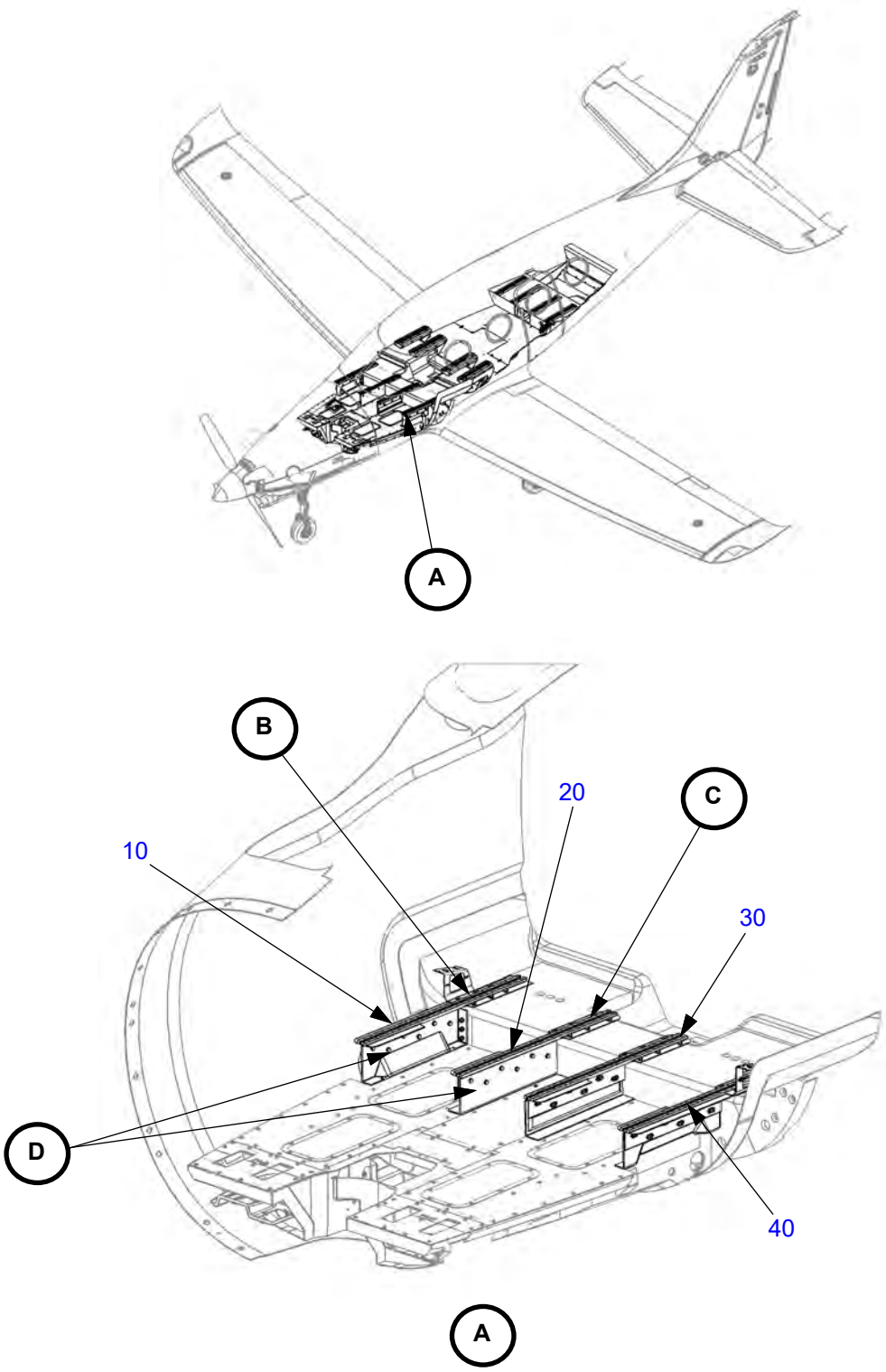

Figure 53-40.1: Cockpit Seat Rails (Continued)

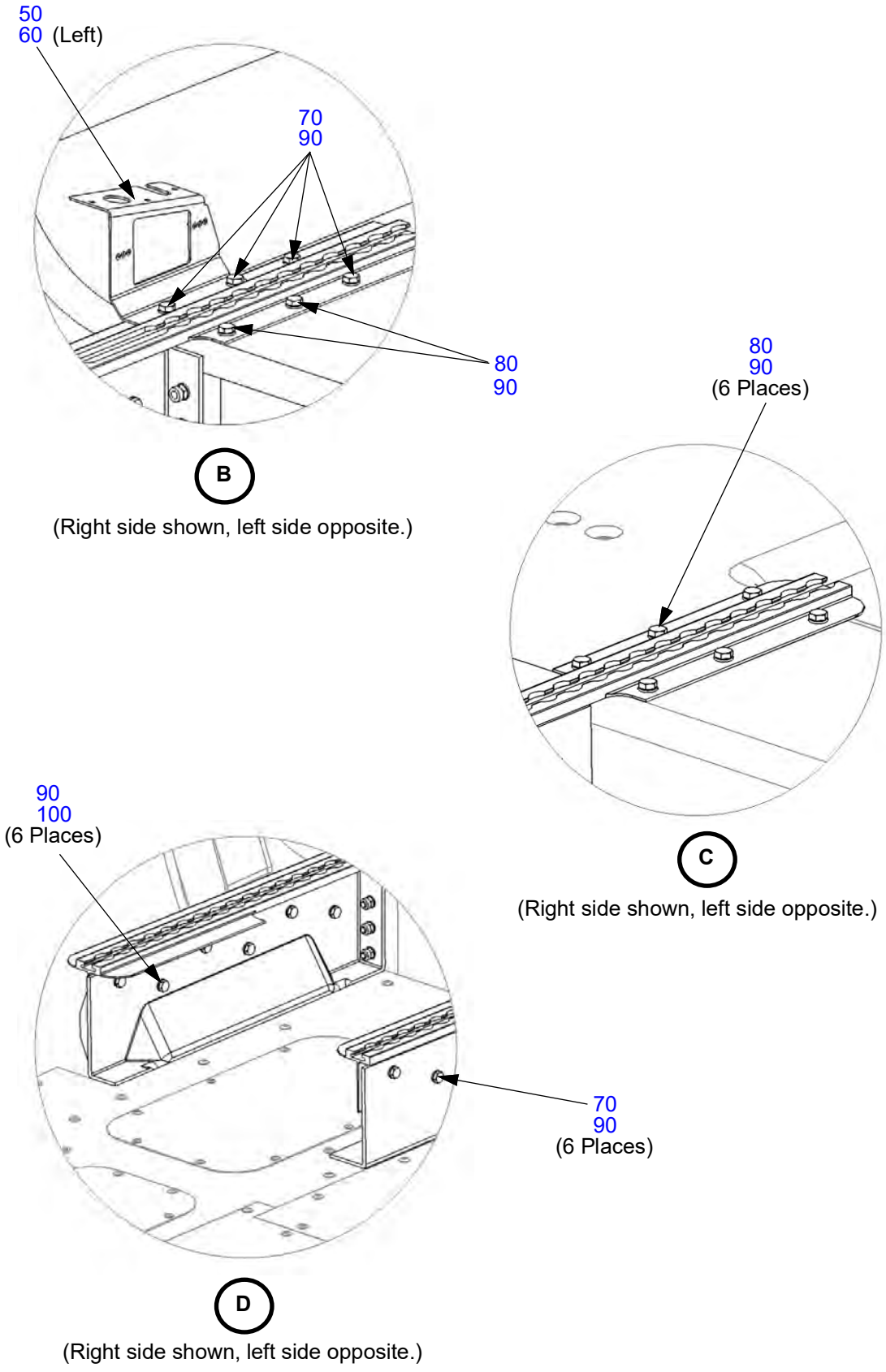

Table 53-40.1: Cockpit Seat Rails

Figure Item Number	Part Number	Part Name	Effectivity Code	Amount in Assy.
10	AK25112004	Rail Assembly, Seat, Crew, Outboard, Right	K003 and On	1
20	AK25112002	Rail Assembly, Seat, Crew, Inboard, Right	K003 and On	1
30	AK25112001	Rail Assembly, Seat, Crew, Inboard, Left	K003 and On	1
40	AK25112003	Rail Assembly, Seat, Crew, Outboard, Left	K003 and On	1
50	AK25112006	Brkt Assy, Cover Panel, Oxygen & Mic Jacks, RH	K003 and On	1
60	AK25112005	Brkt Assy, Cover Panel, Oxygen & Mic Jacks, LH	K003 and On	1
70	AN4-7A	Bolt, 1/4-28 x 29/32" Undrilled	K003 and On	20
80	AN4-6A	Bolt, 1/4-28 x 25/32" Undrilled	K003 and On	16
90	NAS1149F0463P	Washer, Flat 1/4 x .063	K003 and On	48
100	AN4-5A	Bolt, 1/4-28 x 21/32" Undrilled	K003 and On	12

Figure 53-40.2: Cabin Seat Rails

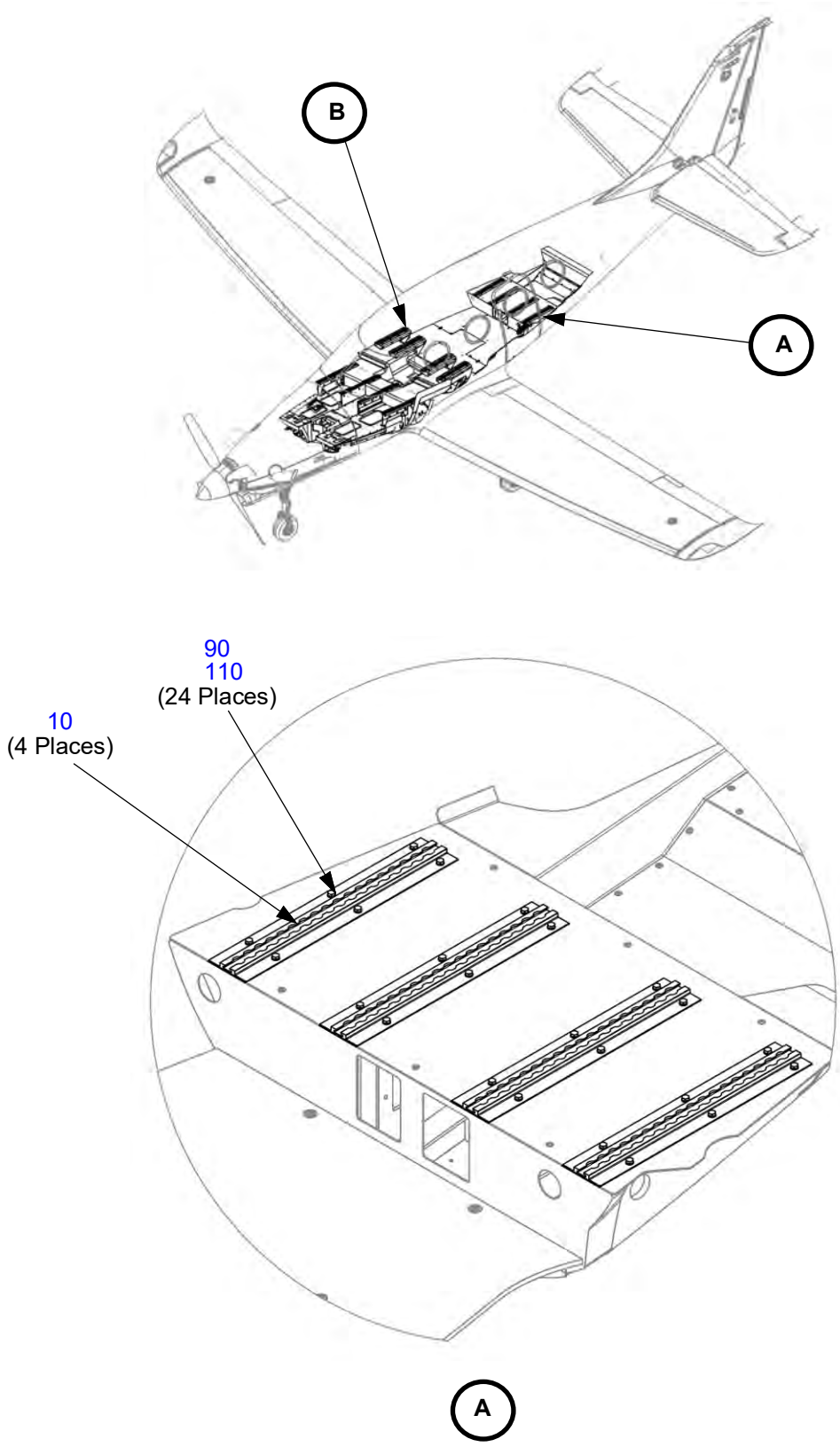

Figure 53-40.2: Cabin Seat Rails (Continued)

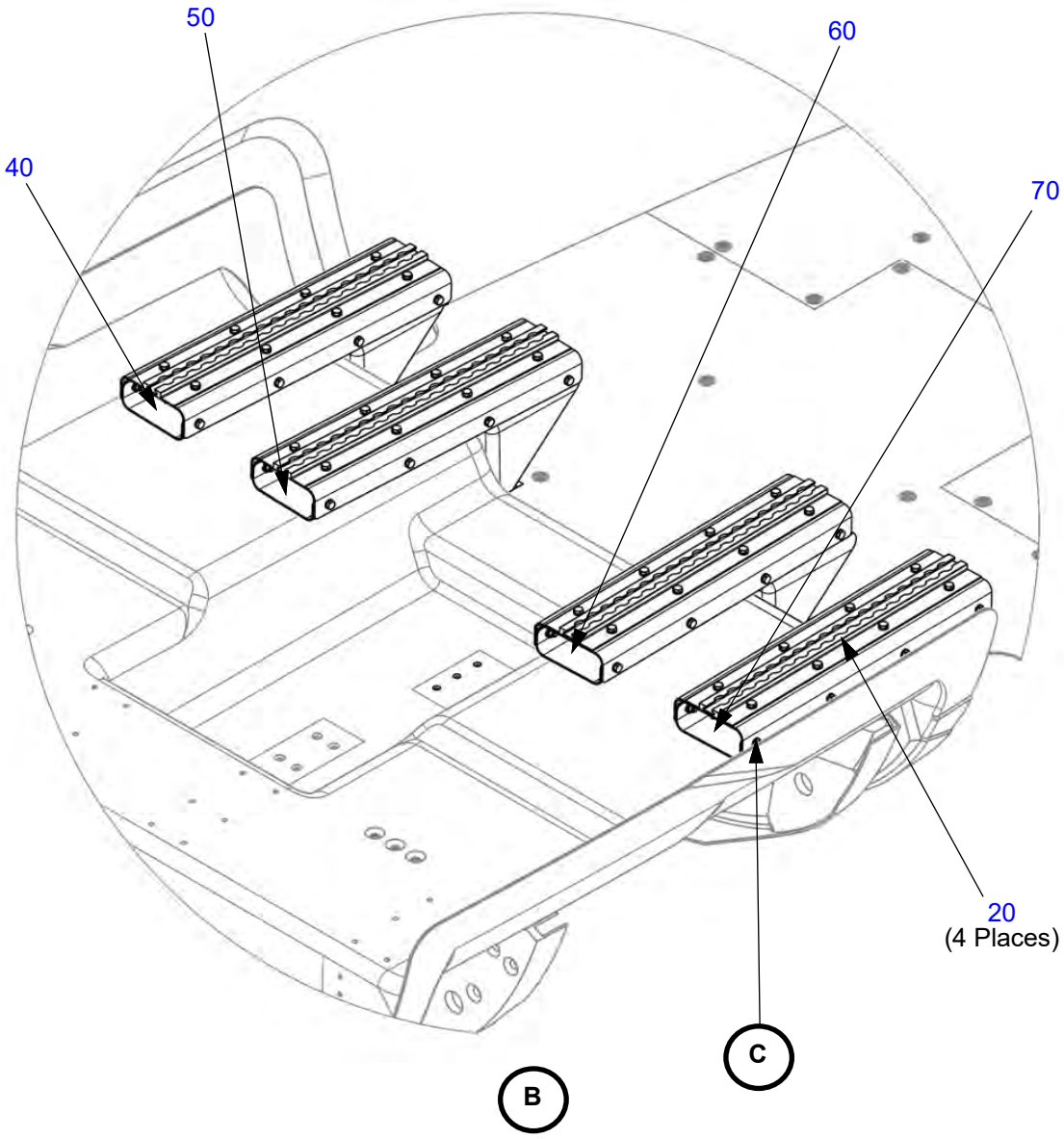

Figure 53-40.2: Cabin Seat Rails (Continued)

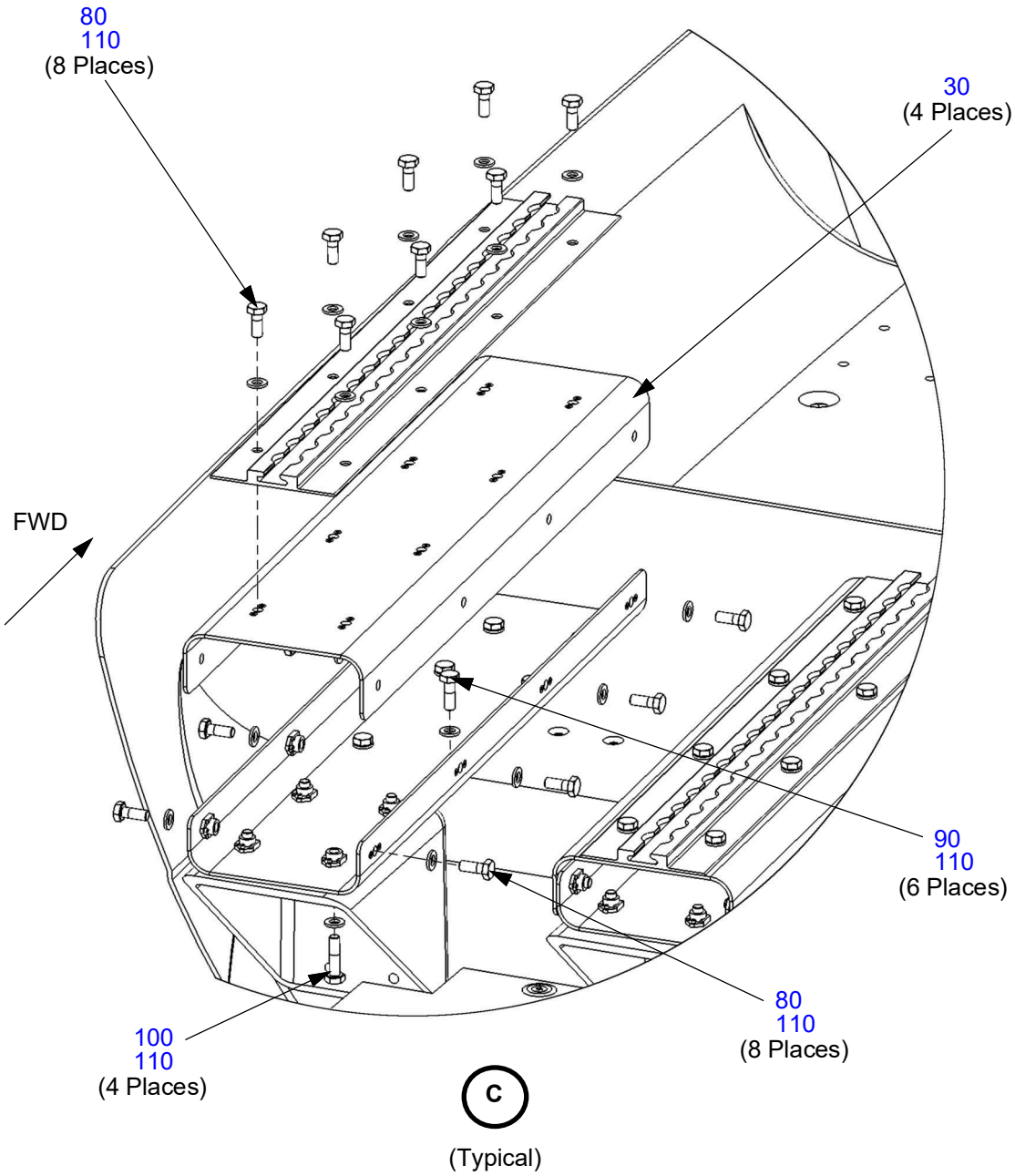

Table 53-40.2: Cabin Seat Rails

Figure Item Number	Part Number	Part Name	Effectivity Code	Amount in Assy.
10	PK25213006	Rail, Seat, Passenger, Mid	K003 and On	4
20	PK25213007	Rail, Seat, Passenger, Aft	K003 and On	4
30	AK25213001	Channel Assembly, Spacer, Seat, Top	K003 and On	4
40	AK25213002	Channel Assembly, Seat, Bottom, Outer, Right	K003 and On	1
50	AK25213004	Channel Assembly, Seat, Bottom, Inner, Right	K003 and On	1
60	AK25213005	Channel Assembly, Seat, Bottom, Inner, Left	K003 and On	1
70	AK25213003	Channel Assembly, Seat, Bottom, Outer, Left	K003 and On	1
80	AN4-5A	Bolt, 1/4-28 x 21/32" Undrilled	K003 and On	64
90	AN4-6A	Bolt, 1/4-28 x 25/32" Undrilled	K003 and On	48
100	AN4-10A	Bolt, 1/4-28 x 1-1/32" Undrilled	K003 and On	16
110	NAS1149F0463P	Washer, Flat 1/4 x .063	K003 and On	128

This Page Intentionally Left Blank

CHAPTER
55
Stabilizers

This Page Intentionally Left Blank

Table of Contents
and
List of Effective Pages

Chapter/Section	Page Number	Effective Date
55-Title	Page 1	03 Apr 2020
55-Title	Page 2	03 Apr 2020
55-LOEP	Page 1	03 Apr 2020
55-LOEP	Page 2	03 Apr 2020
55-TOC	Page 1	03 Apr 2020
55-TOC	Page 2	03 Apr 2020
Horizontal Stabilizer		
55-10	Page 1	03 Apr 2020
55-10	Page 2	03 Apr 2020
55-10	Page 3	03 Apr 2020
55-10	Page 4	03 Apr 2020
55-10	Page 5	03 Apr 2020
55-10	Page 6	03 Apr 2020
55-10	Page 7	03 Apr 2020
55-10	Page 8	03 Apr 2020
55-10	Page 9	03 Apr 2020
55-10	Page 10	03 Apr 2020
55-10	Page 11	03 Apr 2020
55-10	Page 12	03 Apr 2020
Vertical Stabilizer		
55-30	Page 1	03 Apr 2020
55-30	Page 2	03 Apr 2020
55-30	Page 3	03 Apr 2020
55-30	Page 4	03 Apr 2020
55-30	Page 5	03 Apr 2020
55-30	Page 6	03 Apr 2020
55-30	Page 7	03 Apr 2020
55-30	Page 8	03 Apr 2020

This Page Intentionally Left Blank

CHAPTER 55

Table of Contents

List of Effective Pages ..... 55-LOEP / Page 1
Table of Contents ..... 55-TOC / Page1

Paragraph **Page Number**

Horizontal Stabilizer

Figure 55-10.1: Horizontal Stabilizer ..... 55-10 / Page 1
Table 55-10.1: Horizontal Stabilizer ..... 55-10 / Page 4
Figure 55-10.2: Elevator and Hinges ..... 55-10 / Page 5
Table 55-10.2: Elevator and Hinges ..... 55-10 / Page 10
Figure 55-10.3: Elevator Trim Tab ..... 55-10 / Page 12
Table 55-10.3: Elevator Trim Tab ..... 55-10 / Page 14

Vertical Stabilizer

Figure 55-40.1: Rudder and Hinges ..... 55-40 / Page 1
Table 55-40.1: Rudder and Hinges ..... 55-40 / Page 5
Figure 55-40.2: Rudder Trim Tab ..... 55-40 / Page 6
Table 55-40.2: Rudder Trim Tab ..... 55-40 / Page 7

This Page Intentionally Left Blank

HORIZONTAL STABILIZER

Figure 55-10.1: Horizontal Stabilizer

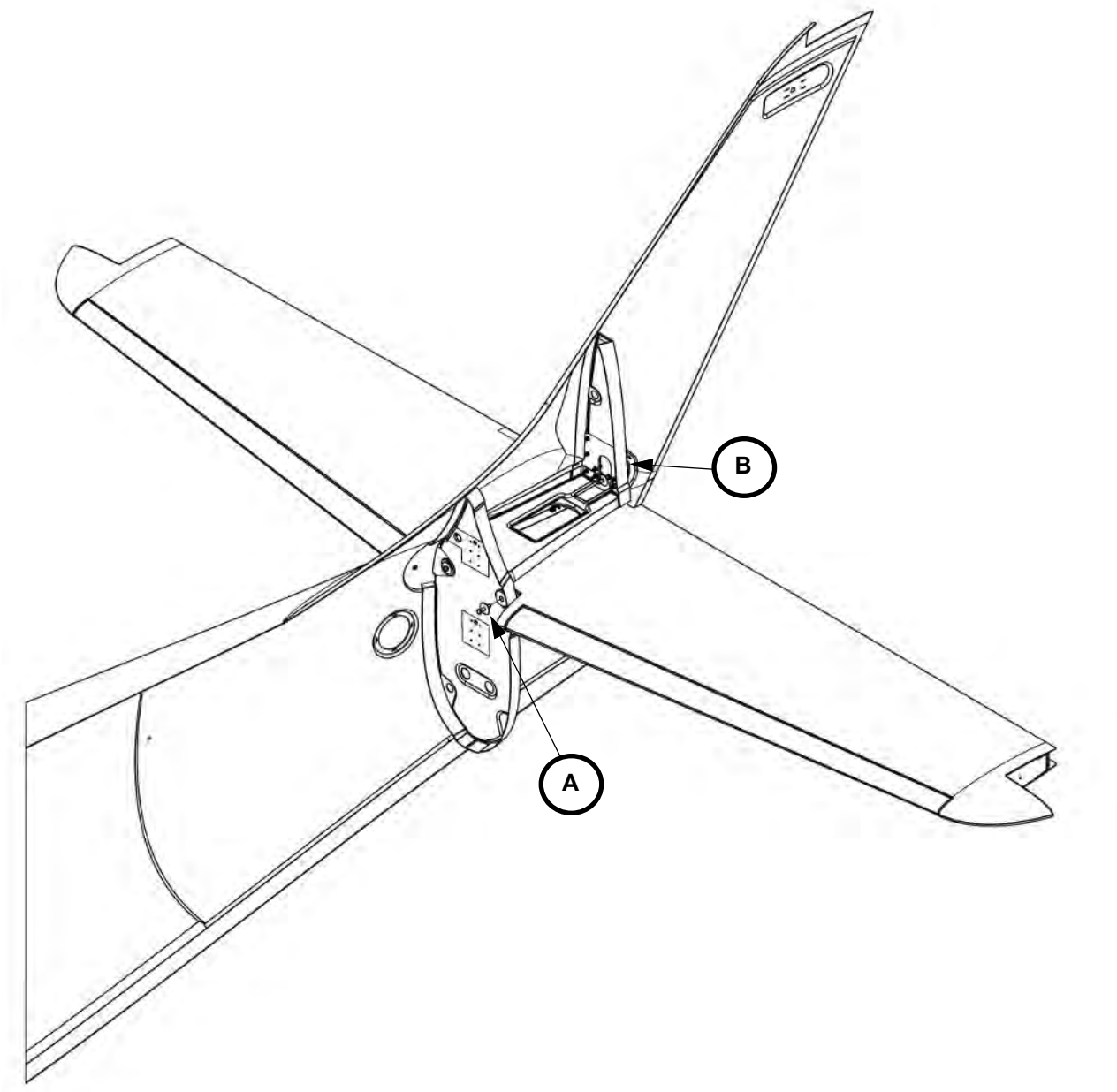

Figure 55-10.1: Horizontal Stabilizer (Continued)

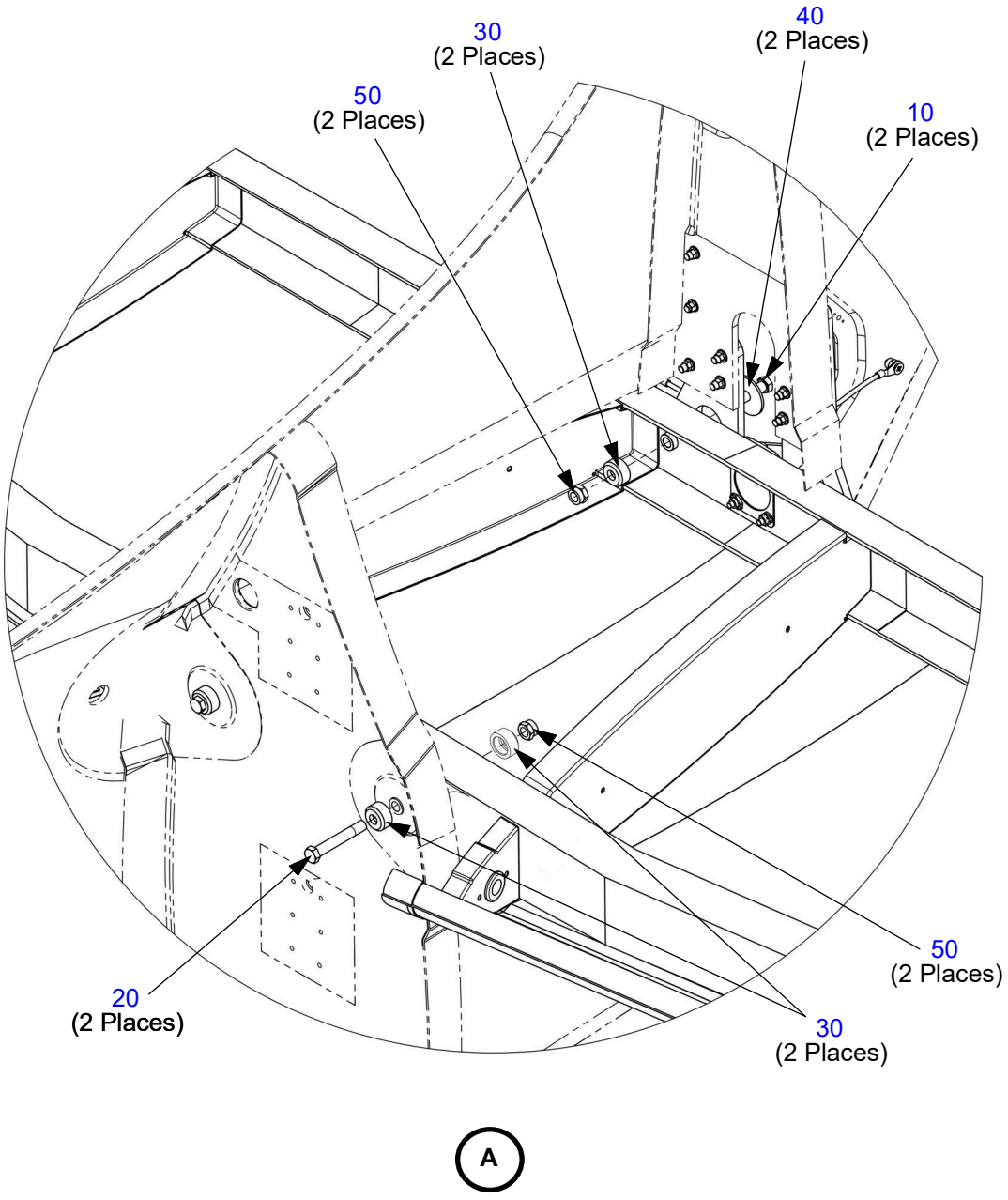

Figure 55-10.1: Horizontal Stabilizer (Continued)

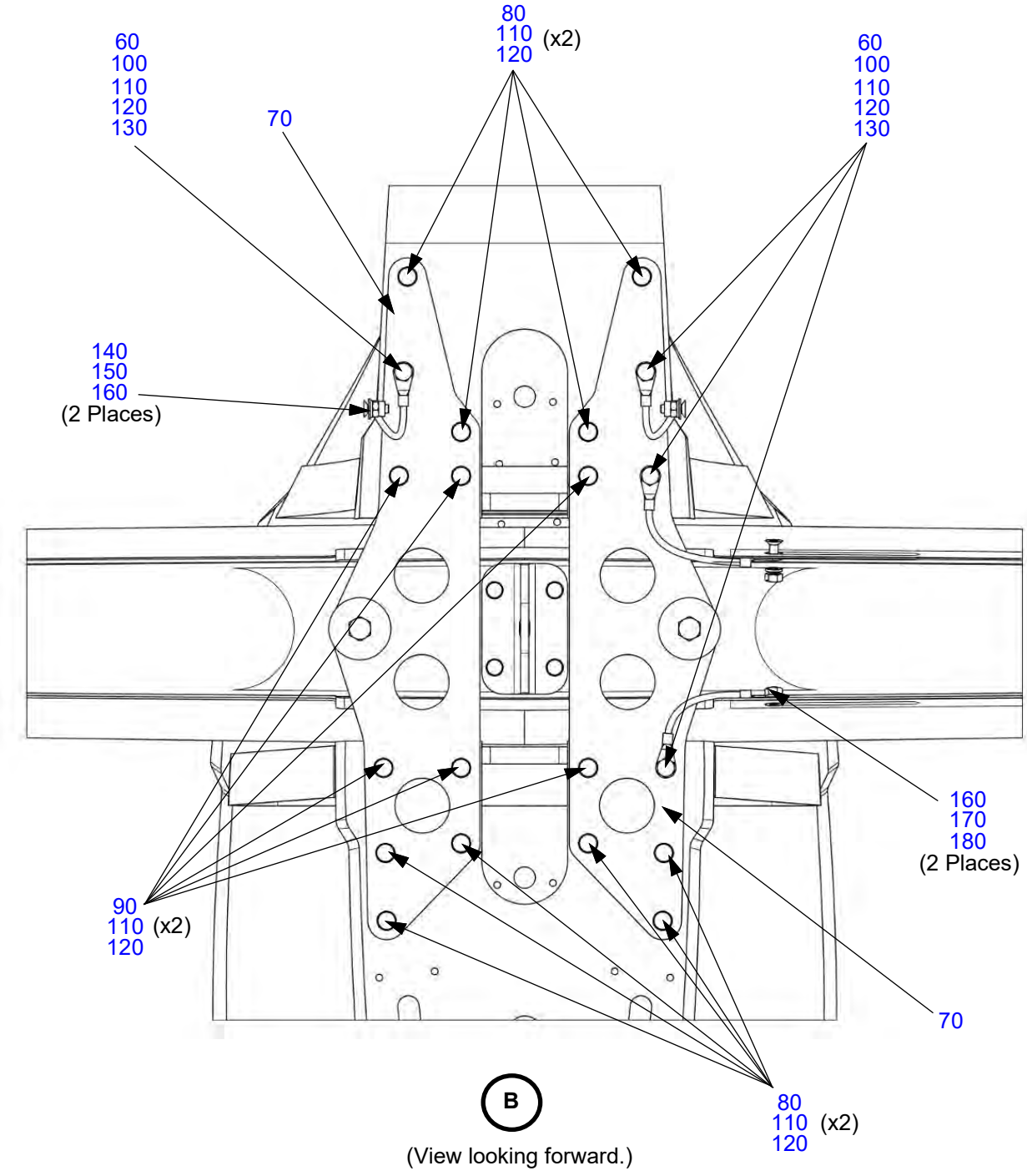

Table 55-10.1: Horizontal Stabilizer

Figure Item Number	Part Number	Part Name	Effectivity Code	Amount in Assy.
10	AN7-20A	Bolt, 7/16-20 x 2-3/32" Undrilled	K003 and On	2
20	AN7-26A	Bolt, 7/16-20 x 2-27/32" Undrilled	K003 and On	2
30	PK55100001	Washer, Cupped, Horizontal Install	K003 and On	6
40	AN970-7	Washer, Flat 7/16 x .109	K003 and On	2
50	MS21044N7	Nut, Self-locking, Steel 7/16-20	K003 and On	4
60	AK13001001	Ground Strap, Horizontal	K003 and On	4
70	PK53000004	Plate, Horizontal Attach	K003 and On	2
80	AN5-11A	Bolt, 5/16-24 x 1-7/32" Undrilled	K003 and On	10
90	AN5-12A	Bolt, 5/16-24 x 1-11/32" Undrilled	K003 and On	6
100	AN5-13A	Bolt, 5/16-24 x 1-15/32" Undrilled	K003 and On	4
110	NAS1149F0532P	Washer, Flat 5/16 x .032	K003 and On	36
120	MS21042L5	Nut, Self-locking, 450°, Reduced 5/16-24	K003 and On	16
130	MS35338-45	Washer, Lock-spring, Ø.312	K003 and On	4
140	MS24694-C98	Screw, Machine, C'sunk, CRES Ø .250 x 23/32	K003 and On	2
150	MS21044C4	Nut, Self-locking, Steel 1/4-28, CRES	K003 and On	2
160	MS35338-139	Washer, Lock-spring, CRES, Ø.250	K003 and On	4
170	MS21083N4	Nut, Self-locking, Non-metallic Insert 1/4-28	K003 and On	2
180	MS24693-S94	Screw, Machine, C'sunk Ø .250 x 0.500	K003 and On	2

Figure 55-10.2: Elevator and Hinges

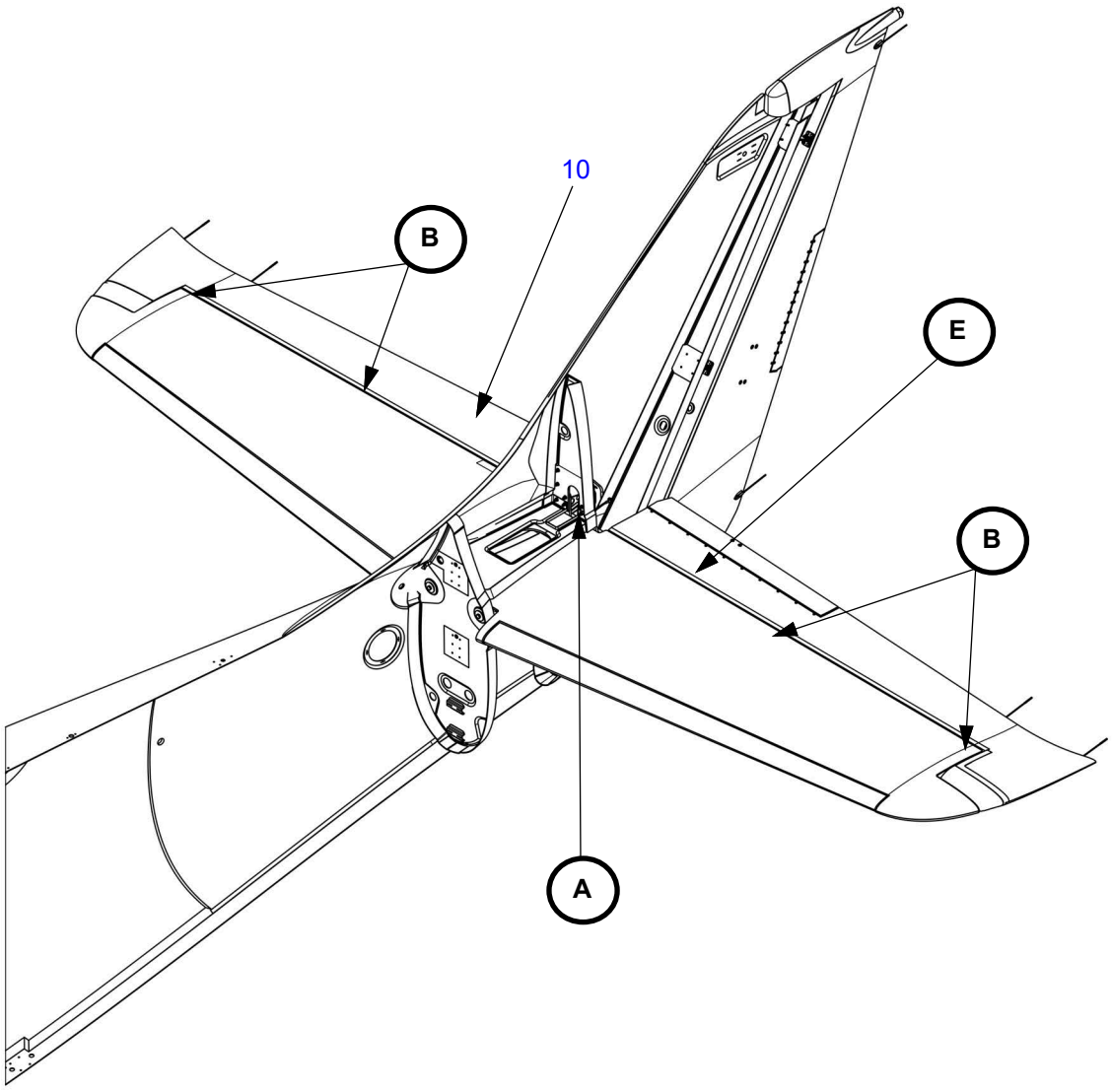

Figure 55-10.2: Elevator and Hinges (Continued)

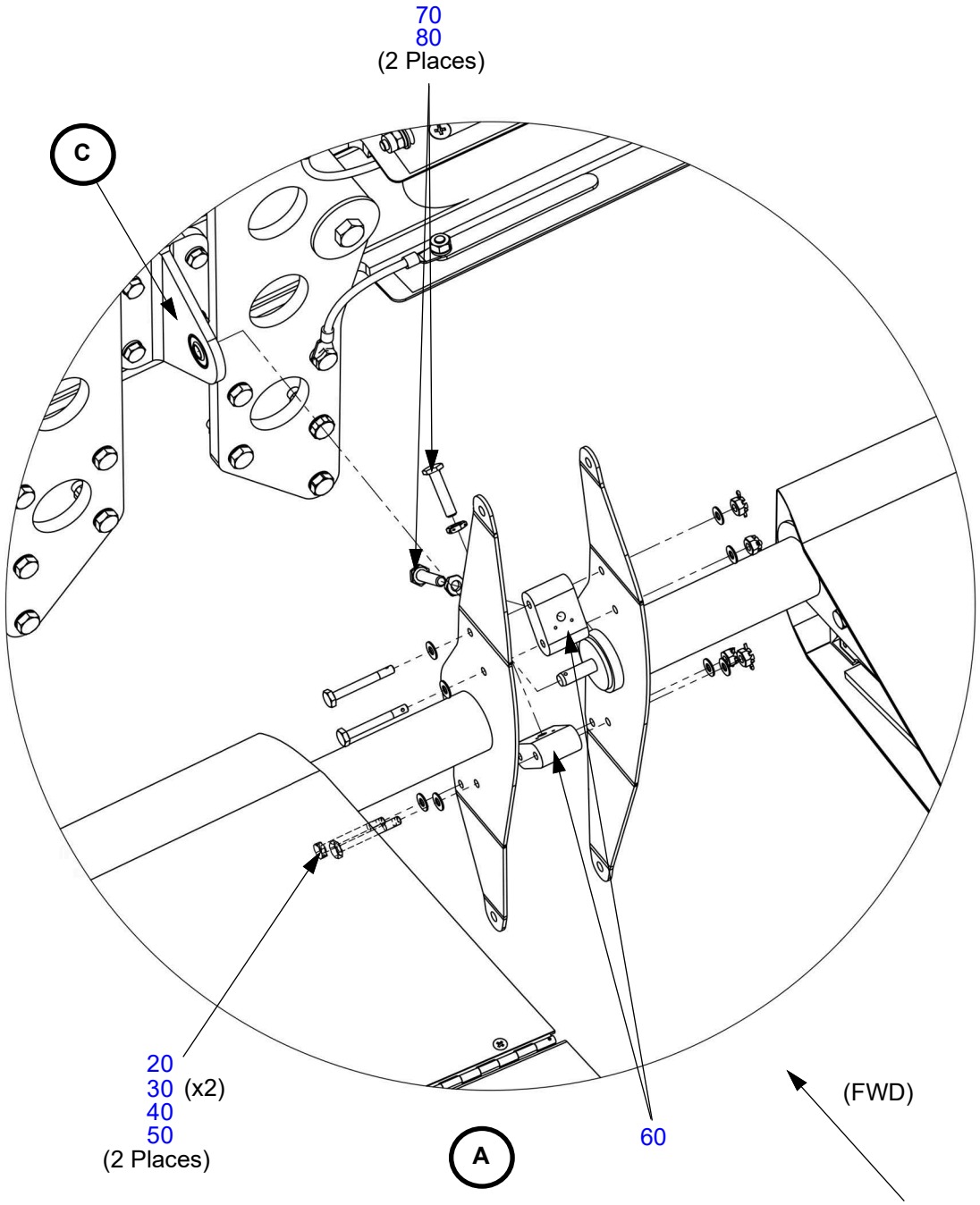

Figure 55-10.2: Elevator and Hinges (Continued)

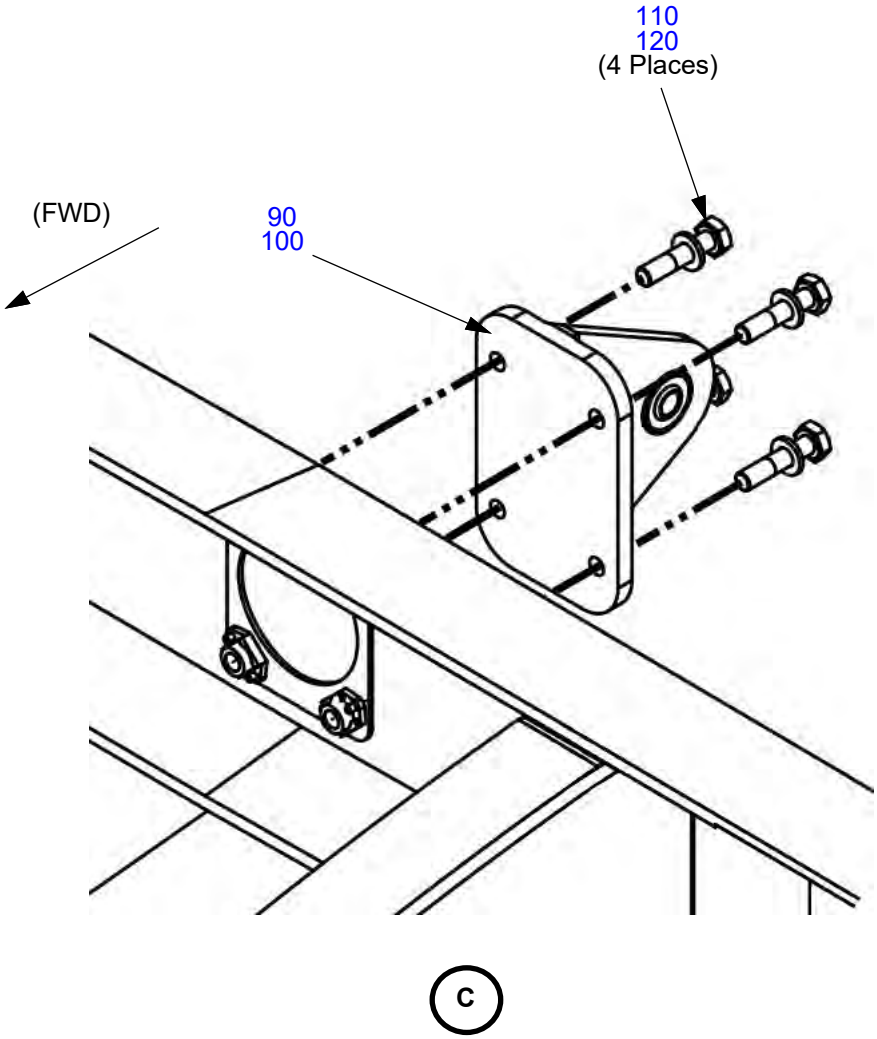

Figure 55-10.2: Elevator and Hinges (Continued)

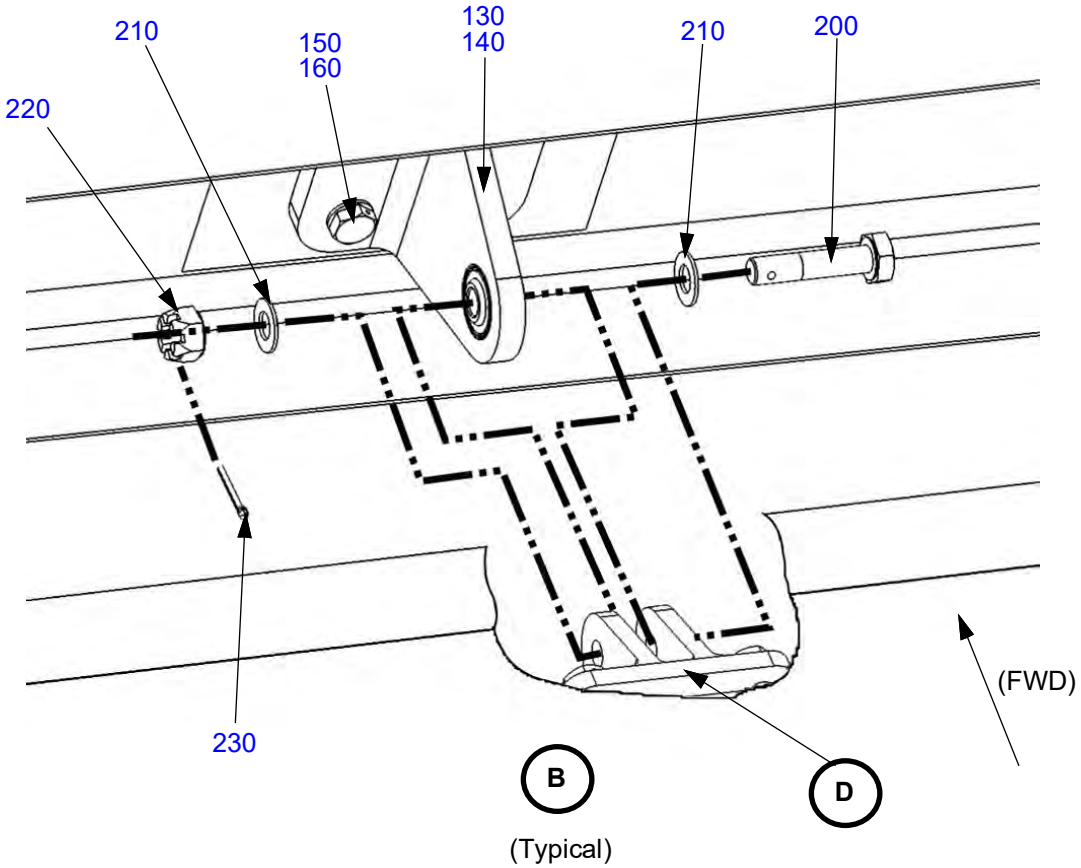

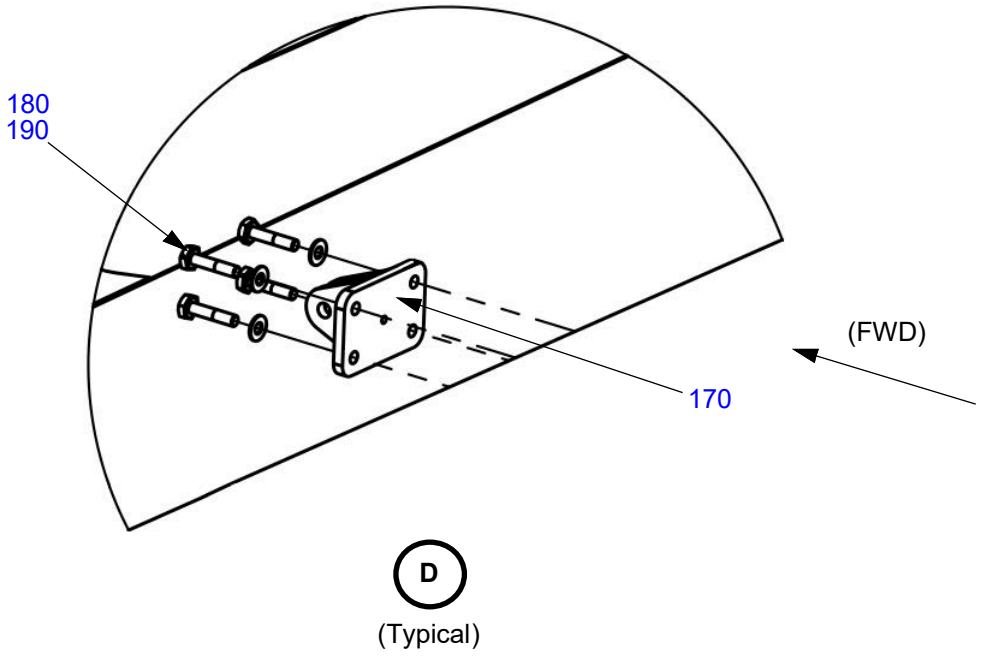

Figure 55-10.2: Elevator and Hinges (Continued)

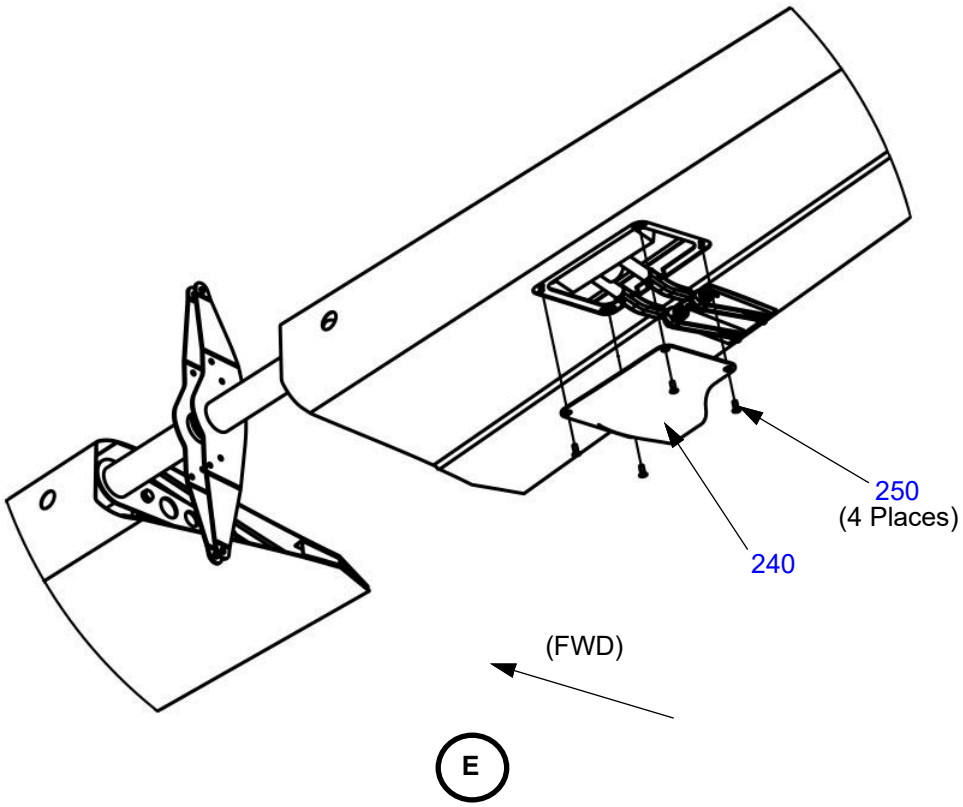

Table 55-10.2: Elevator and Hinges

Figure Item Number	Part Number	Part Name	Effectivity Code	Amount in Assy.
10	AK55200000	Elevator Assembly	K003 and On	1
20	AN3-15	Bolt, 10-32 x 1-21/32" Drilled Shank	K003 and On	4
30	NAS1149F0332P	Washer, Flat #10 x .032	K003 and On	8
40	AN310-3	Nut, Castellated, Steel 10-32	K003 and On	4
50	MS24665-132	Pin, Cotter, Cad Steel Ø .062 x .50	K003 and On	4
60	PK55203011	Stop Block, Elevator	K003 and On	2
70	NAS428CH4A11	Bolt, Crowned Hex, Drilled .250-28 x 1.125	K003 and On	2
80	NAS1423-4	Nut, Jam, Drilled, Cad Steel 1/4-28	K003 and On	2
90	PK55103000	Hinge, Horizontal To Elevator, Center	K003 and On	1
100	MS27645-5A	Bearing, Ball, Self-aligning .313 ID x .813 OD	K003 and On	1
110	AN4-11A	Bolt, 1/4-28 x 4 20 1-5/32" Undrilled	K003 and On	4
120	NAS1149F0463P	Washer, Flat 1/4 x .063	K003 and On	4
130	PK55102000	Hinge, Horizontal To Elevator	K003 and On	4
140	MS27645-4A	Bearing, Ball, Self-aligning .250 ID x .750 OD	K003 and On	4
150	AN3-10A	Bolt, 10-32 x 1-1/32" Undrilled	K003 and On	16
160	NAS1149F0363P	Washer, Flat #10 x .063	K003 and On	16
170	PK27005001	Bracket, Hinge, Universal	K003 and On	4
180	AN3-7A	Bolt, 10-32 x 29/32" Undrilled	K003 and On	16
190	NAS1149F0332P	WASHER, FLAT #10 x .032	K003 and On	16
200	AN4-11	Bolt, 1/4-28 x 1-5/32" Drilled Shank	K003 and On	4
210	NAS1149F0432P	Washer, Flat 1/4 x .032	K003 and On	8
220	AN310-4	Nut, Castellated, Steel 1/4-28	K003 and On	4
230	MS24665-134	Pin, Cotter, Cad Steel Ø .062 x .75	K003 and On	4

Figure Item Number	Part Number	Part Name	Effectivity Code	Amount in Assy.
240	PK55201016	Trim Actuator Access Panel, Elevator	K003 and On	1
250	MS24694-C4	Screw, Machine, C'sunk, CRES Ø .164 x 15/32	K003 and On	4

Figure 55-10.3: Elevator Trim Tab

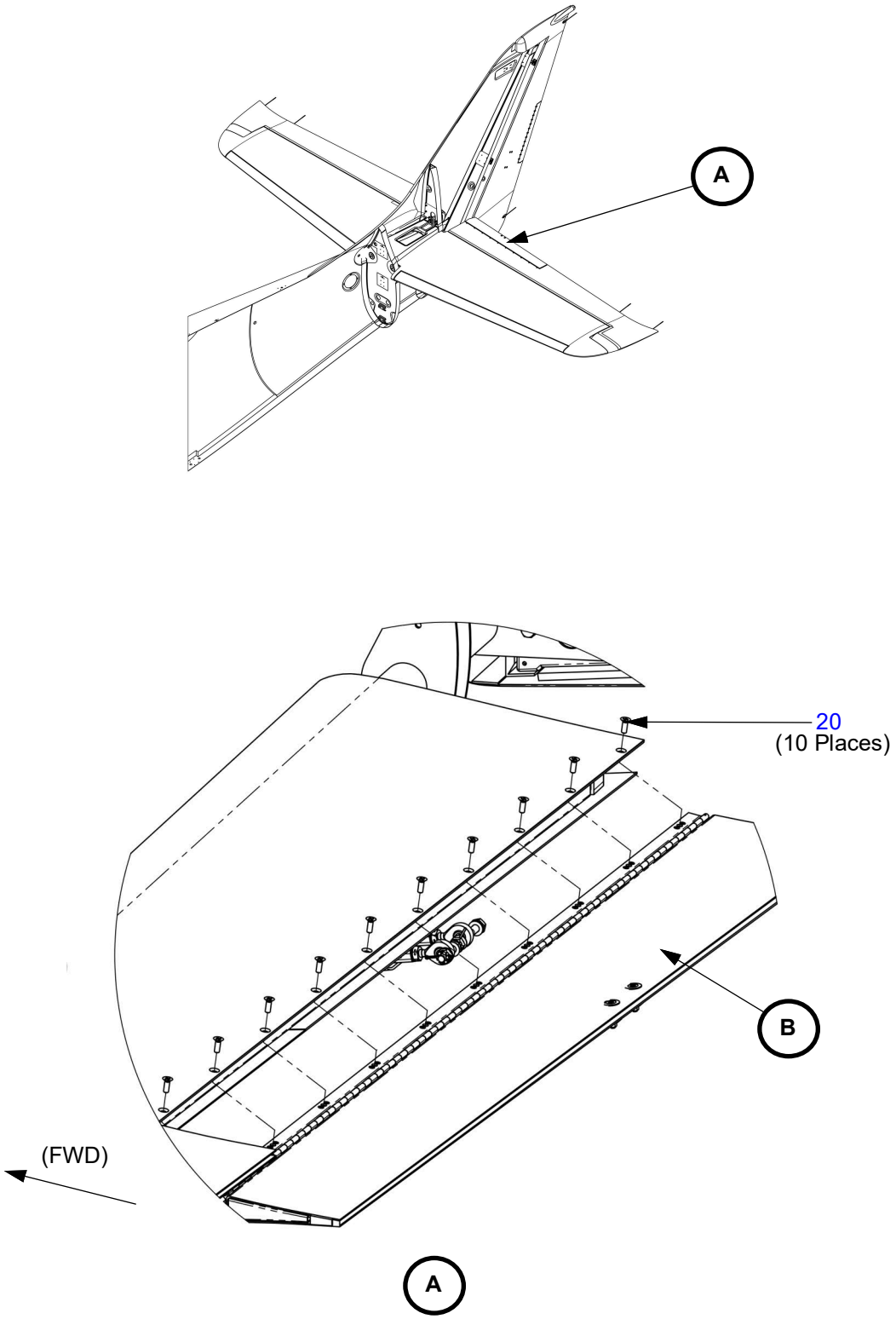

Figure 55-10.3: Elevator Trim Tab (Continued)

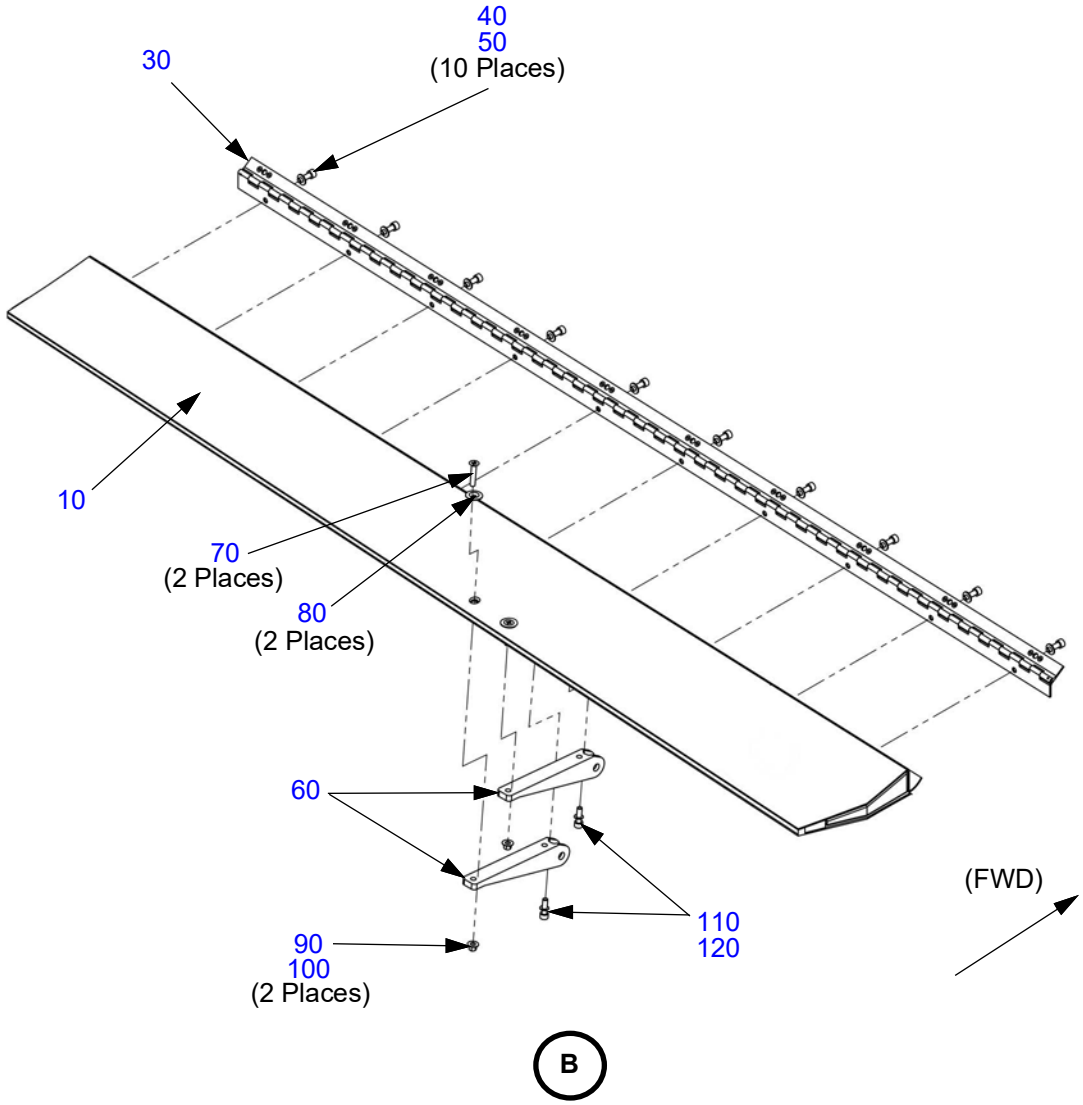

Table 55-10.3: Elevator Trim Tab

Figure Item Number	Part Number	Part Name	Effectivity Code	Amount in Assy.
10	AK55202100	Elevator Trim Tab Structural Assembly	K003 and On	1
20	MS24694-C4	Screw, Machine, C'sunk, CRES Ø .164 x 15/32	K003 and On	10
30	AK55202300	Hinge Assy, Elevator Trim Tab	K003 and On	1
40	NAS1352-08-8P	Screw, Socket Head .164-32 x .500	K003 and On	10
50	NAS1149FN832P	Washer, Flat #8 x .032	K003 and On	10
60	PK55202001	Horn, Elevator Trim Tab	K003 and On	2
70	MS24693-C53	Screw, Machine, C'sunk, CRES Ø .164 x 0.875	K003 and On	2
80	NAS1169C8	Washer, Dimpled, CRES No. 8 x .025	K003 and On	2
90	NAS1149FN816P	Washer, Flat #8 x .016	K003 and On	2
100	MS21042L08	Nut, Self-locking, 450°, Reduced #8-32	K003 and On	2
110	NAS1352-08-9P	Screw, Socket Head .164-32 x .563	K003 and On	2
120	NAS620C8	Washer, Reduced OD, CRES, .169 ID x .304 OD	K003 and On	2

VERTICAL STABILIZER

Figure 55-40.1: Rudder and Hinges

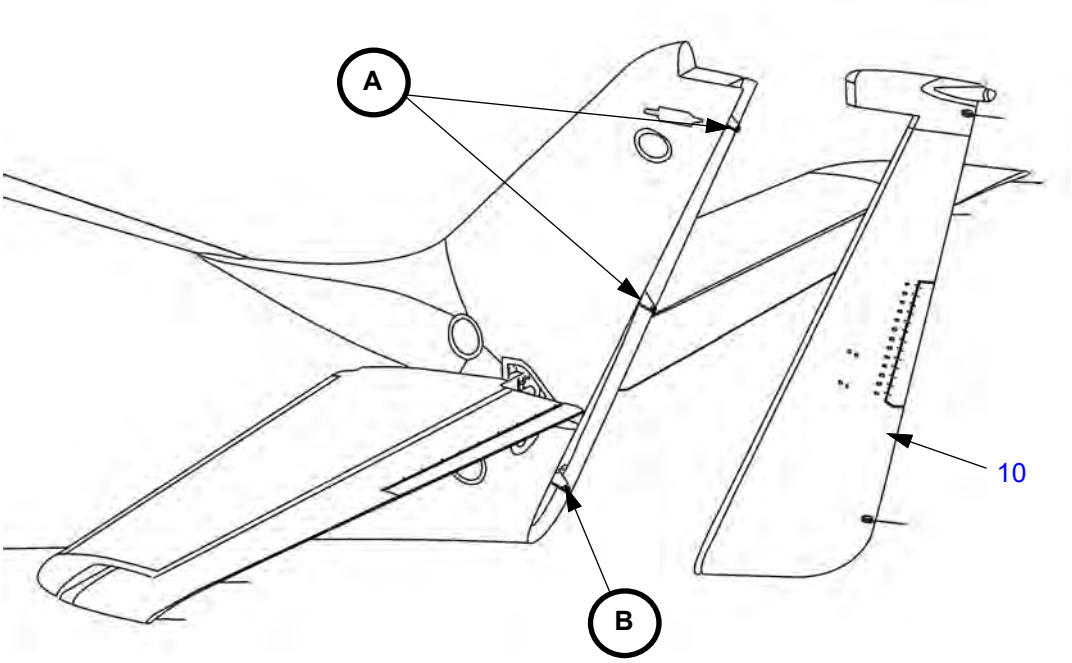

Figure 55-40.1: Rudder and Hinges (Continued)

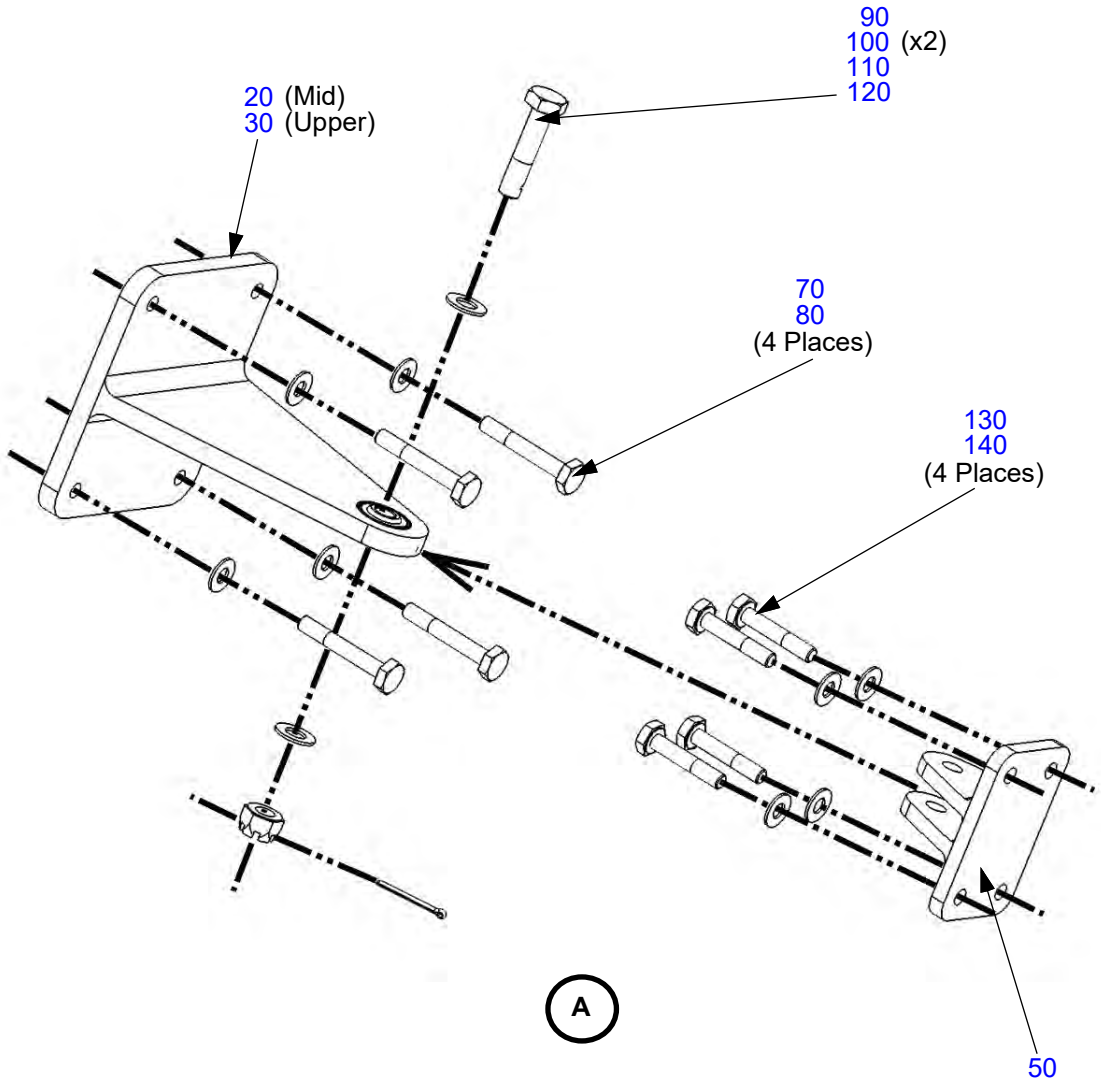

Figure 55-40.1: Rudder and Hinges (Continued)

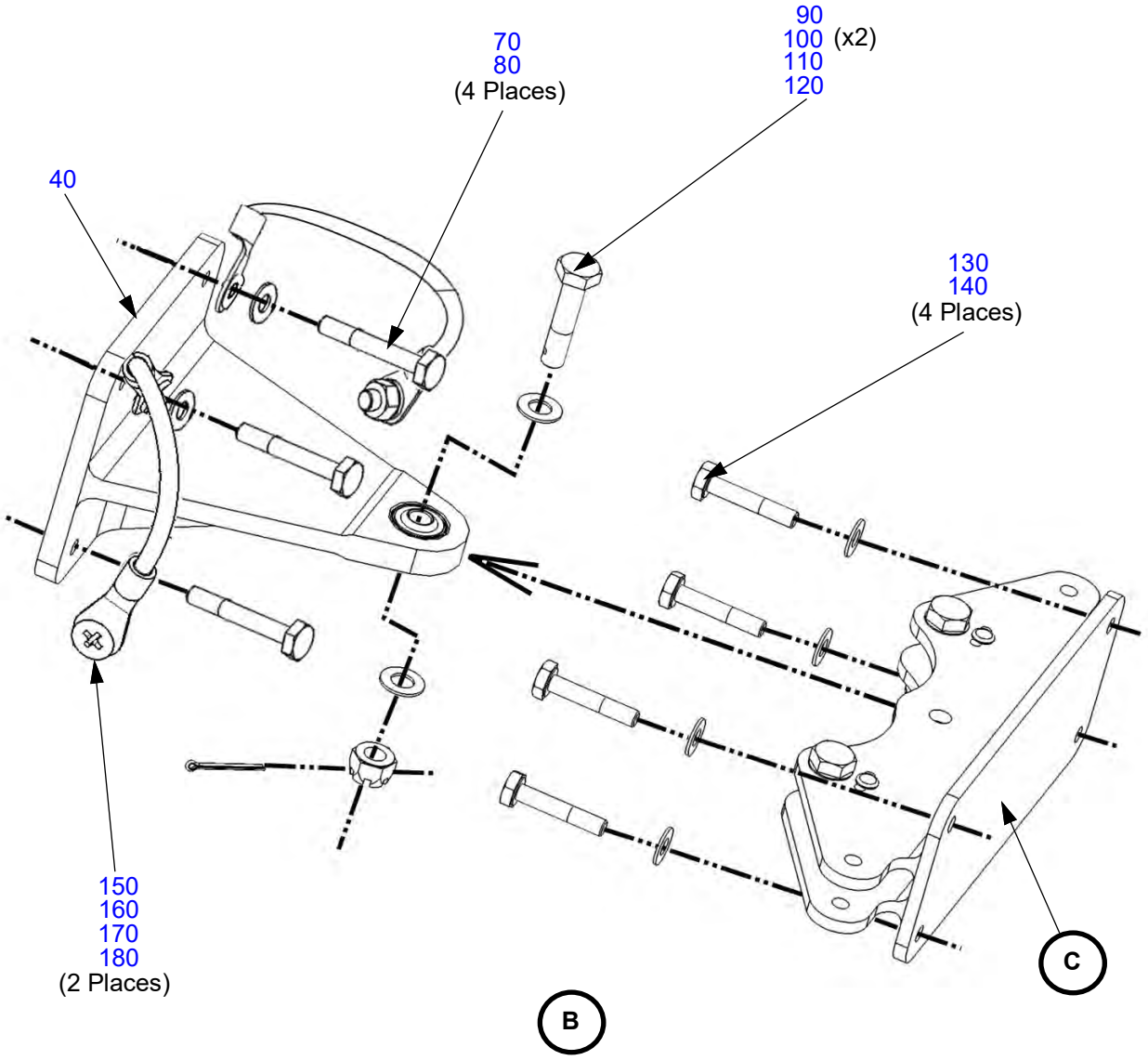

Figure 55-40.1: Rudder and Hinges (Continued)

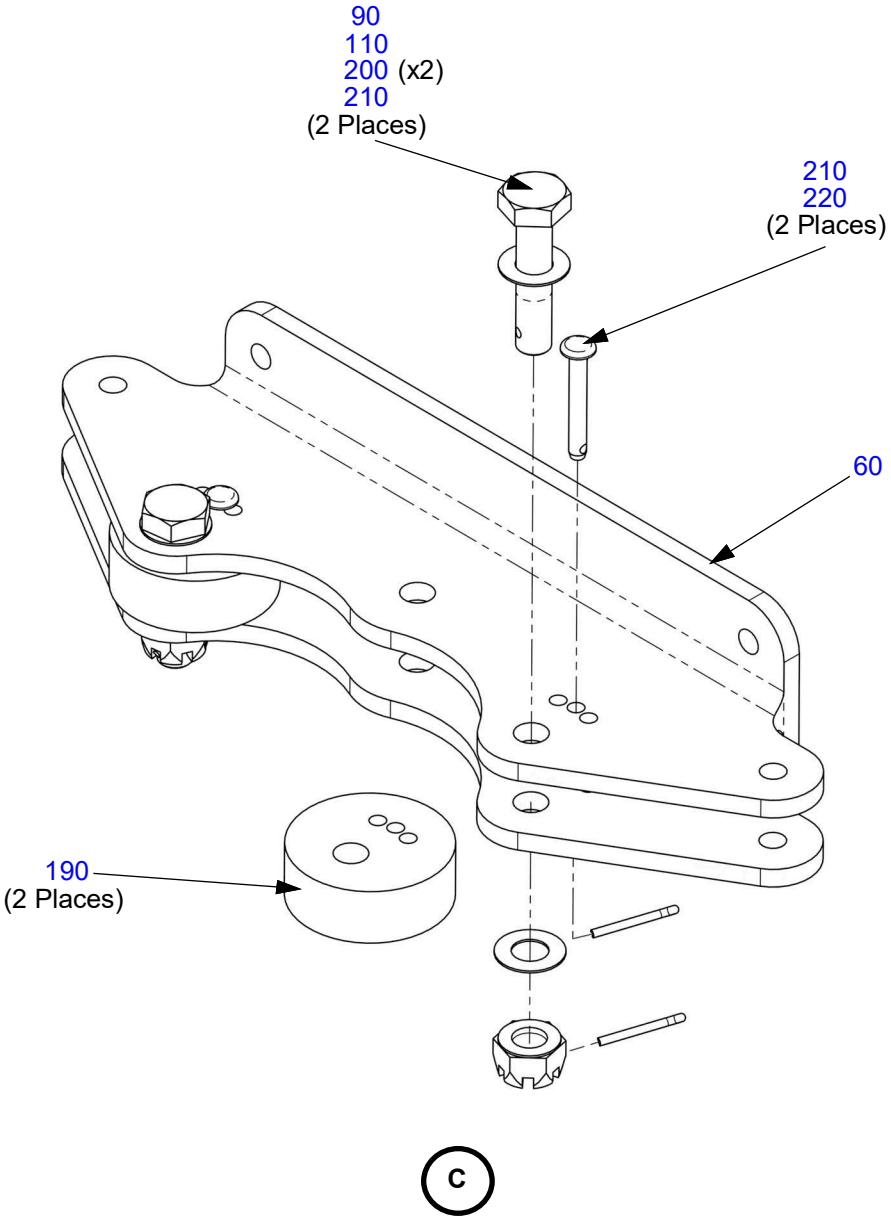

Table 55-40.1: Rudder and Hinges

Figure Item Number	Part Number	Part Name	Effectivity Code	Amount in Assy.
10	AK55400000	Assembly, Rudder	K003 and On	1
20	AK53000002-1	Assy, Horn, Rudder, Mid	K003 and On	1
30	AK53000001-1	Assy, Horn, Rudder, Upper	K003 and On	1
40	AK53000003	Assy, Horn, Rudder, Bottom	K003 and On	1
50	PK27005001	Bracket, Hinge, Universal	K003 and On	2
60	PK55404001	Actuator Arm, Rudder	K003 and On	1
70	AN3-11A	Bolt, 10-32 x 1-5/32” Undrilled	K003 and On	12
80	NAS1149F0363P	Washer, Flat #10 x .063	K003 and On	12
90	AN4-11	Bolt, 1/4-28 x 1-5/32" Drilled Shank	K003 and On	2
100	NAS1149F0432P	Washer, Flat 1/4 x .032	K003 and On	6
110	AN310-4	Nut, Castellated, Steel 1/4-28	K003 and On	5
120	MS24665-134	Pin, Cotter, Cad Steel Ø .062 x .75	K003 and On	3
130	AN3-10A	Bolt, 10-32 x 1-1/32" Undrilled	K003 and On	12
140	NAS1149F0332P	Washer, Flat #10 x .032	K003 and On	12
150	AK13005502	Ground Strap, Vertical Stabilizer	K003 and On	2
160	MS24694-S97	Screw, Machine, C'sunk Ø .250 x 21/32	K003 and On	2
170	MS35338-44	Washer, Lock-spring, Ø.250	K003 and On	2
180	MS21083N4	Nut, Self-locking, Non-metallic Insert 1/4-28	K003 and On	2
190	PK55404002	Spacer, Rudder Horn	K003 and On	2
200	NAS1149F0416P	Washer, Flat 1/4 x .016	K003 and On	4
210	MS24665-132	Pin, Cotter, Cad Steel Ø .062 x .50	K003 and On	4
220	MS20392-1C25	Pin, Drilled Shank Ø .125 x 0.953	K003 and On	2

Figure 55-40.2: Rudder Trim Tab

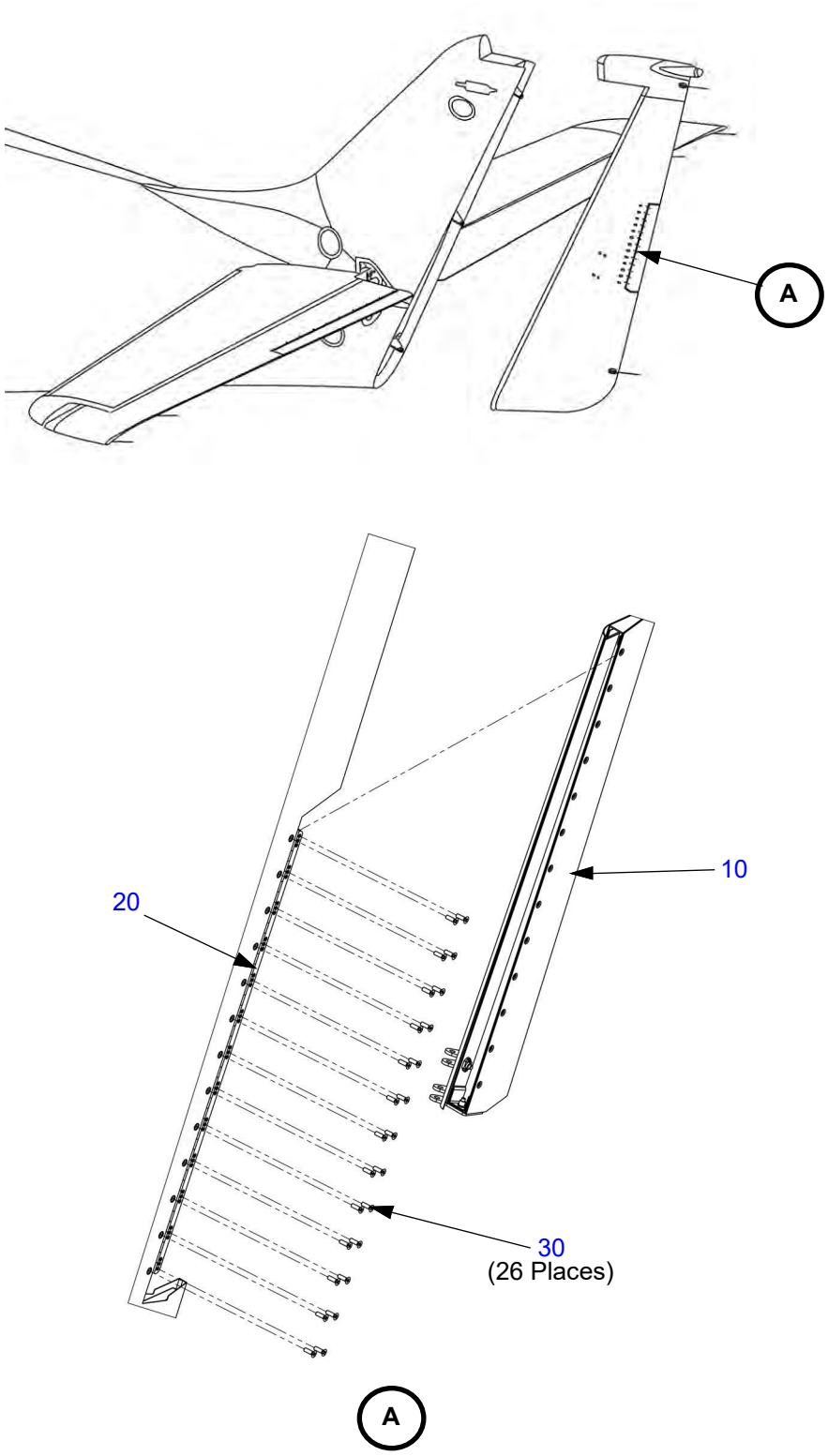

Table 55-40.2: Rudder Trim Tab

Figure Item Number	Part Number	Part Name	Effectivity Code	Amount in Assy.
10	AK55402000	Rudder Trim Tab, Structural Assy	K003 and On	1
20	AK55403000	Trim Tab Hinge Assy, Rudder	K003 and On	1
30	MS24694-C5	Screw, Machine, C'sunk, CRES Ø .164 x 17/32	K003 and On	26

This Page Intentionally Left Blank

CHAPTER
56

Windows

This Page Intentionally Left Blank

Table of Contents
and
List of Effective Pages

Chapter/Section	Page Number	Effective Date
56-Title	Page 1	03 Apr 2020
56-Title	Page 2	03 Apr 2020
56-LOEP	Page 1	14 Jul 2021
56-LOEP	Page 2	03 Apr 2020
56-TOC	Page 1	14 Jul 2021
56-TOC	Page 2	03 Apr 2020
Passenger Compartment		
56-20	Page 1	03 Apr 2020
56-20	Page 2	03 Apr 2020
56-20	Page 3	03 Apr 2020
56-20	Page 4	03 Apr 2020
56-20	Page 5	14 Jul 2021
56-20	Page 6	14 Jul 2021
56-30	Page 1	03 Apr 2020
56-30	Page 2	03 Apr 2020
56-30	Page 3	03 Apr 2020
56-30	Page 4	03 Apr 2020

This Page Intentionally Left Blank

CHAPTER 56

Table of Contents

List of Effective Pages ..... 56-LOEP / Page 1
Table of Contents ..... 56-TOC / Page1

Paragraph **Page Number**

Passenger Compartment

Figure 56-20.1: Cabin Windows ..... 56-20 / Page 1
Table 56-20.1: Cabin Windows ..... 56-20 / Page 4
Figure 56-20.2: Window Seal Ring ..... 56-20 / Page 5
Table 56-20.2: Window Seal Ring ..... 56-20 / Page 6

Doors

Figure 56-30.1: Passenger Door Window ..... 56-30 / Page 1
Table 56-30.1: Passenger Door Window ..... 56-30 / Page 2
Figure 56-30.2: Emergency Exit Window ..... 56-30 / Page 3
Table 56-30.2: Emergency Exit Window ..... 56-30 / Page 4

This Page Intentionally Left Blank

PASSENGER COMPARTMENT

Figure 56-20.1: Cabin Windows

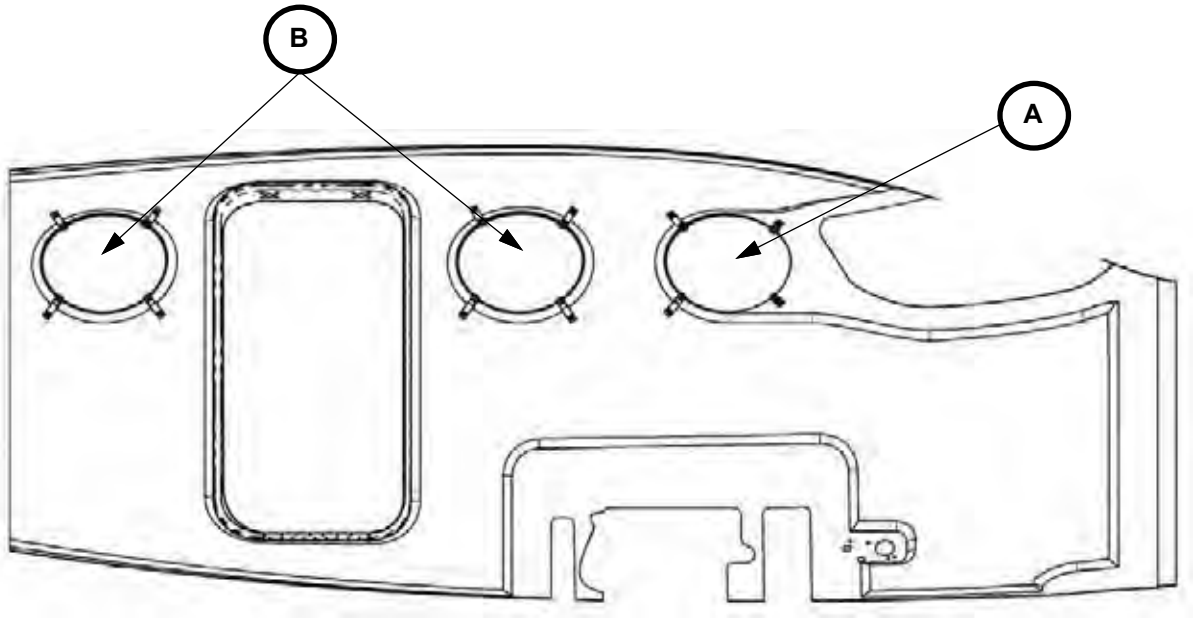

View Looking Outboard, Left Side

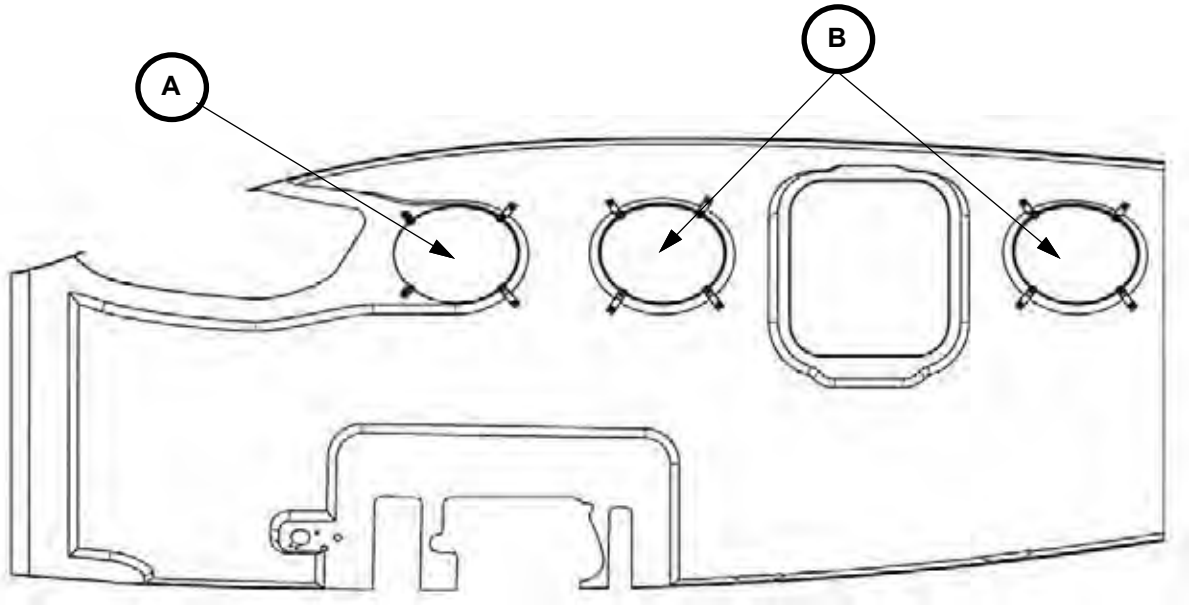

View Looking Outboard, Right Side

Figure 56-20.1: Cabin Windows (Continued)

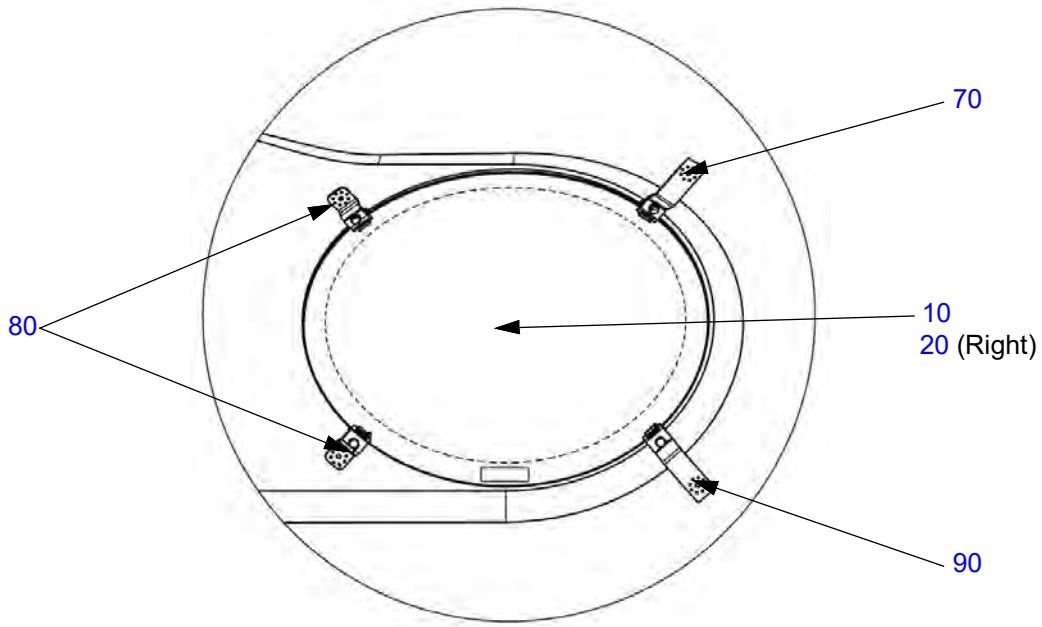

Forward Window
Right Shown, Left Opposite

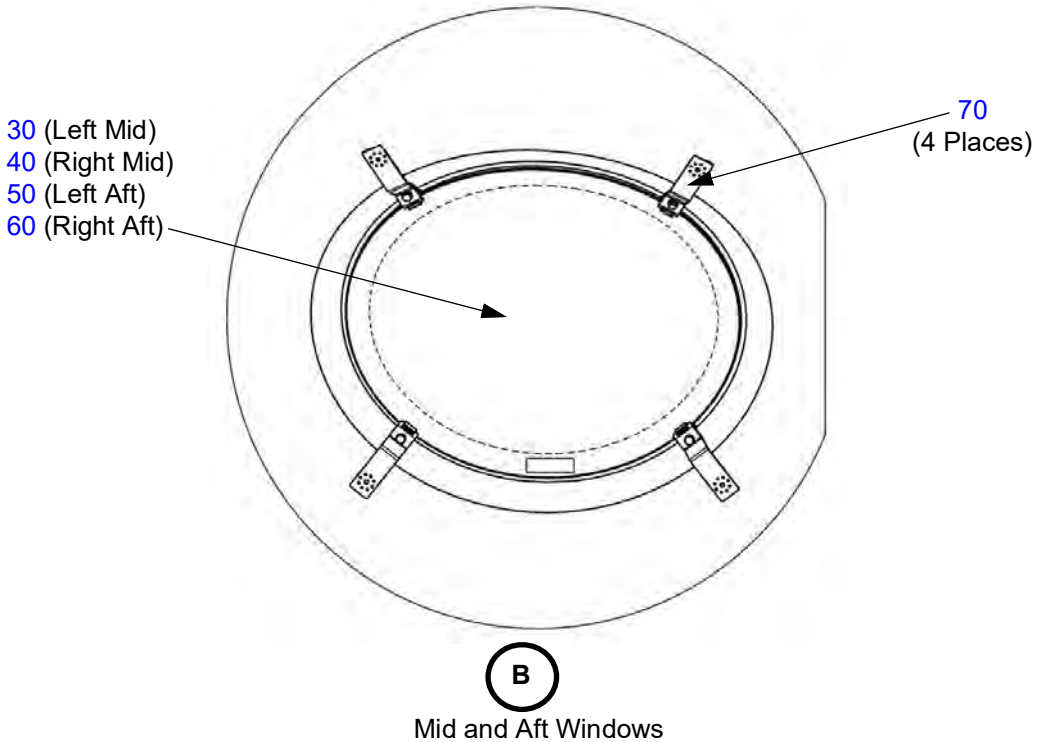

Mid and Aft Windows
Right Shown, Left Opposite

Figure 56-20.1: Cabin Windows (Continued)

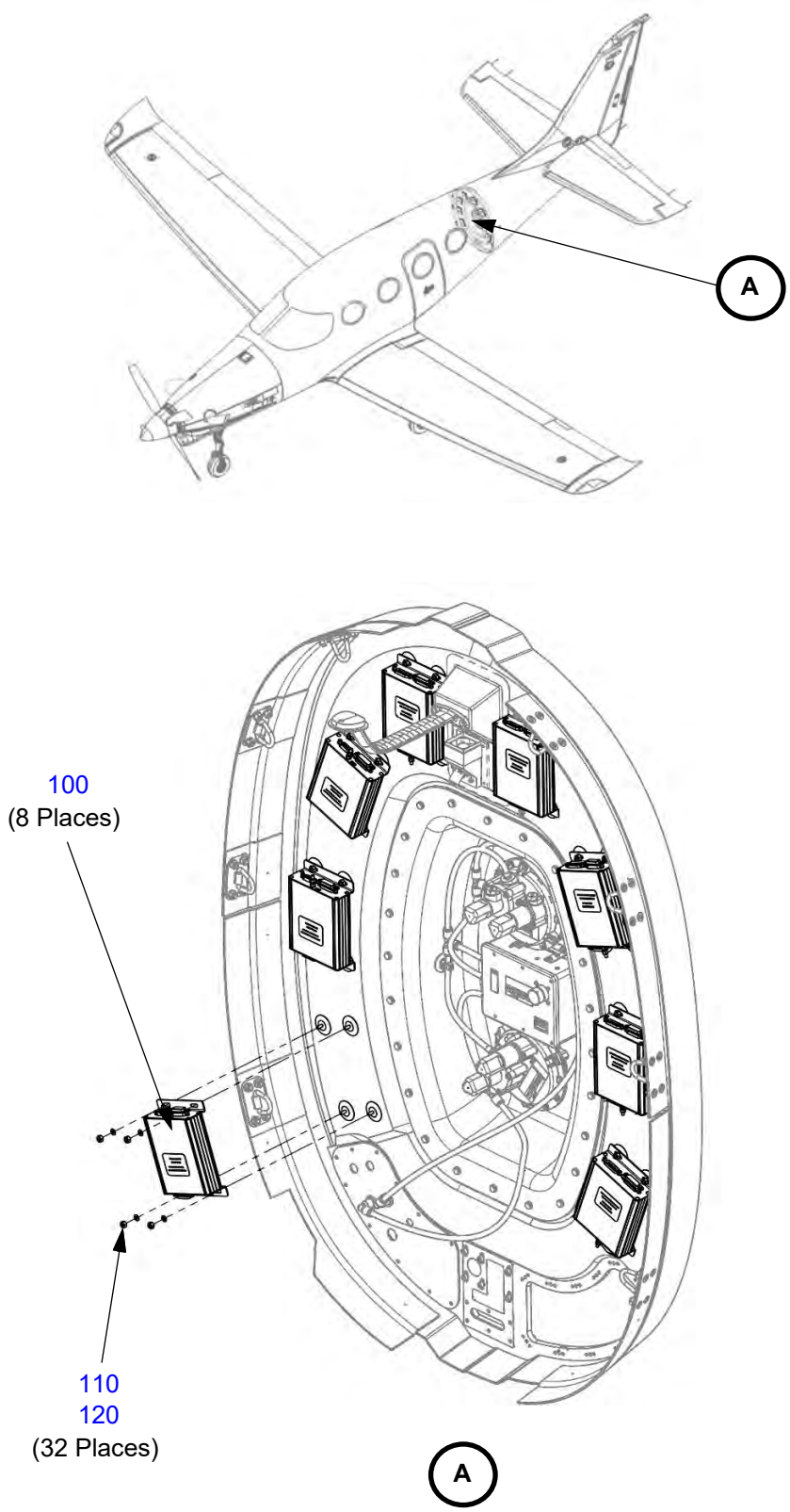

Table 56-20.1: Cabin Windows

Figure Item Number	Part Number	Part Name	Effectivity Code	Amount in Assy.
10	PK99562001	Window, Cabin, Left Fwd	K003 and On	1
20	PK99562002	Window, Cabin, Right Fwd	K003 and On	1
30	PK99562003	Window, Cabin, Mid Left	K003 and On	1
40	PK99562004	Window, Cabin, Mid Right	K003 and On	1
50	PK99562005	Window, Cabin, Aft Left	K003 and On	1
60	PK99562006	Window, Cabin, Aft Right	K003 and On	1
70	AK56200007	Support Bracket Assy, Window	K003 and On	18
80	AK56200010	Assy, Attach Bracket, Window	K003 and On	4
90	AK56200016	Assy, Attach Bracket, Fwd Window, Lower, Aft	K003 and On	2
100	PK99610007	Module, Window Dimmer	K003 and On	8
110	MS21083N08	Nut, Self-locking, Non-metallic Insert .164-32	K003 and On	32
120	NAS1149FN816P	Washer, Flat #8 x .016	K003 and On	32

Figure 56-20.2: Window Seal Ring

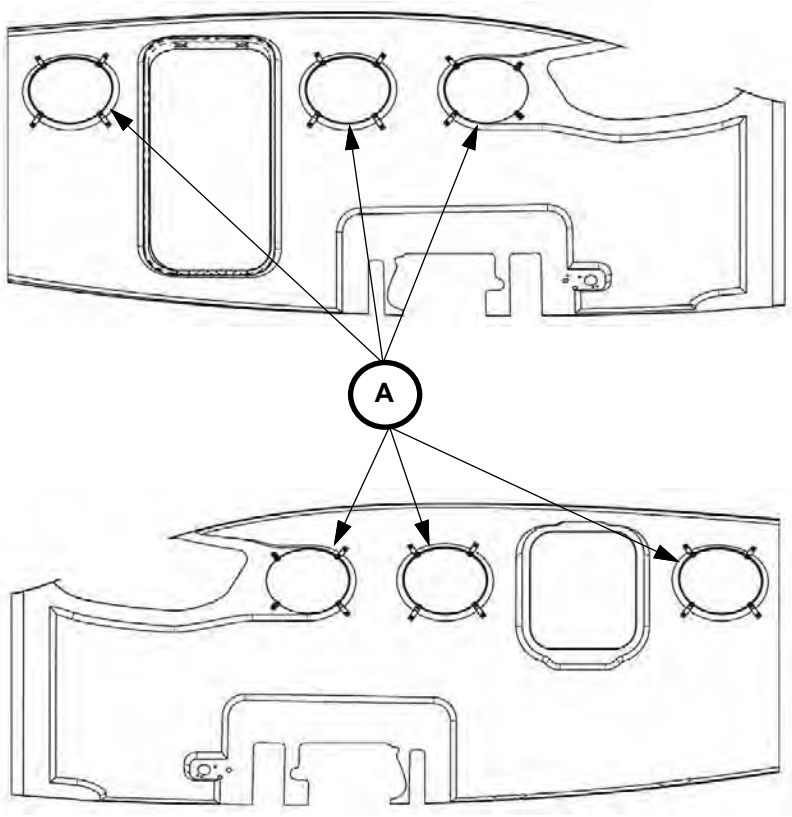

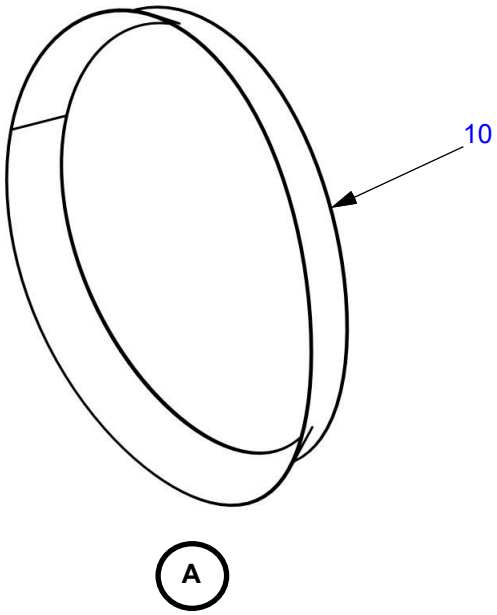

Table 56-20.2: Window Seal Ring

Figure Item Number	Part Number	Part Name	Effectivity Code	Amount in Assy.
10	PK99005370	Seal, Window Ring	K003 and On	6

DOORS

Figure 56-30.1: Passenger Door Window

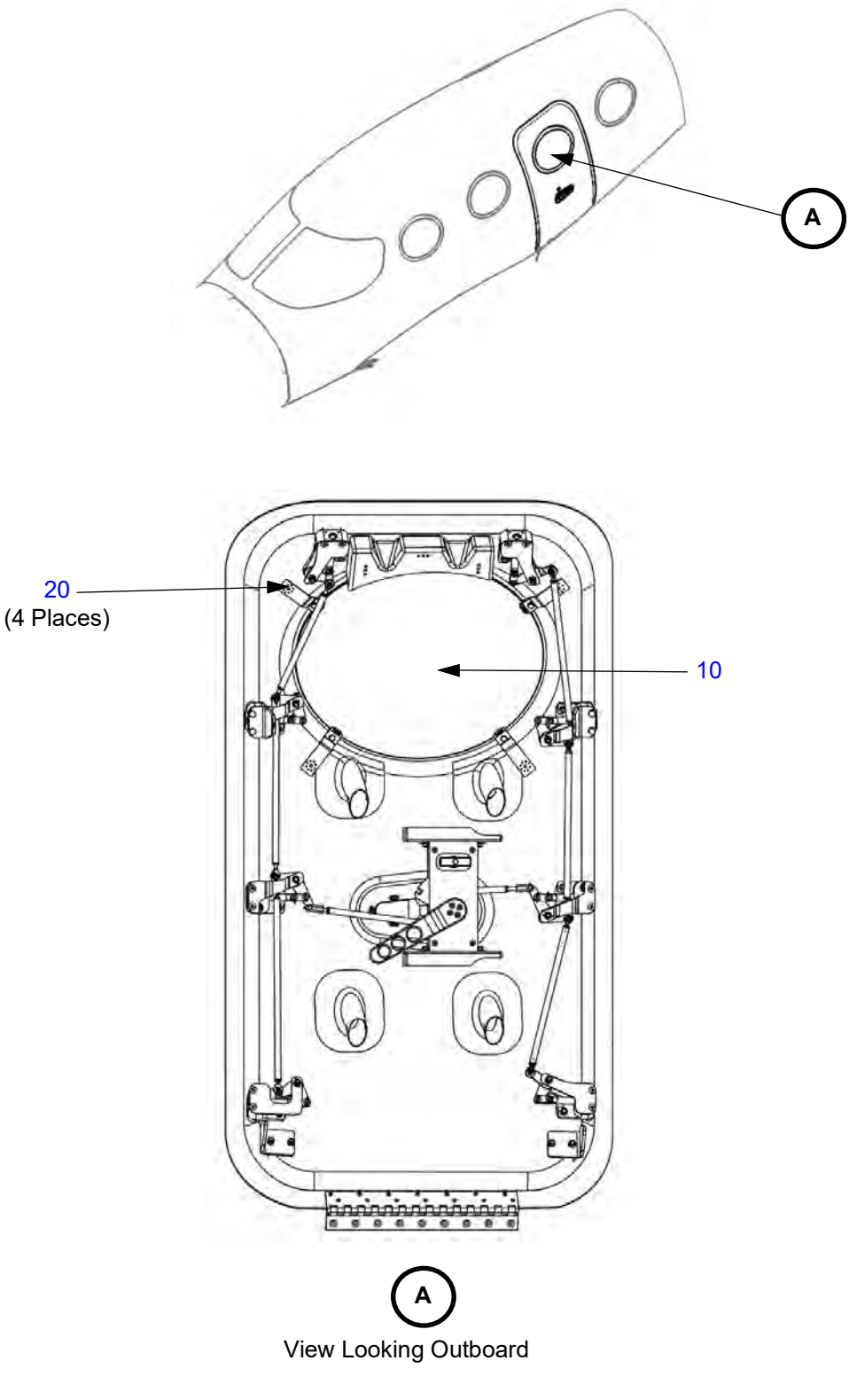

Table 56-30.1: Passenger Door Window

Figure Item Number	Part Number	Part Name	Effectivity Code	Amount in Assy.
10	PK99562011	Window, Cabin Door	K003 and On	1
20	AK56200015	Assy, Attach Bracket, Cabin Door	K003 and On	4

Figure 56-30.2: Emergency Exit Window

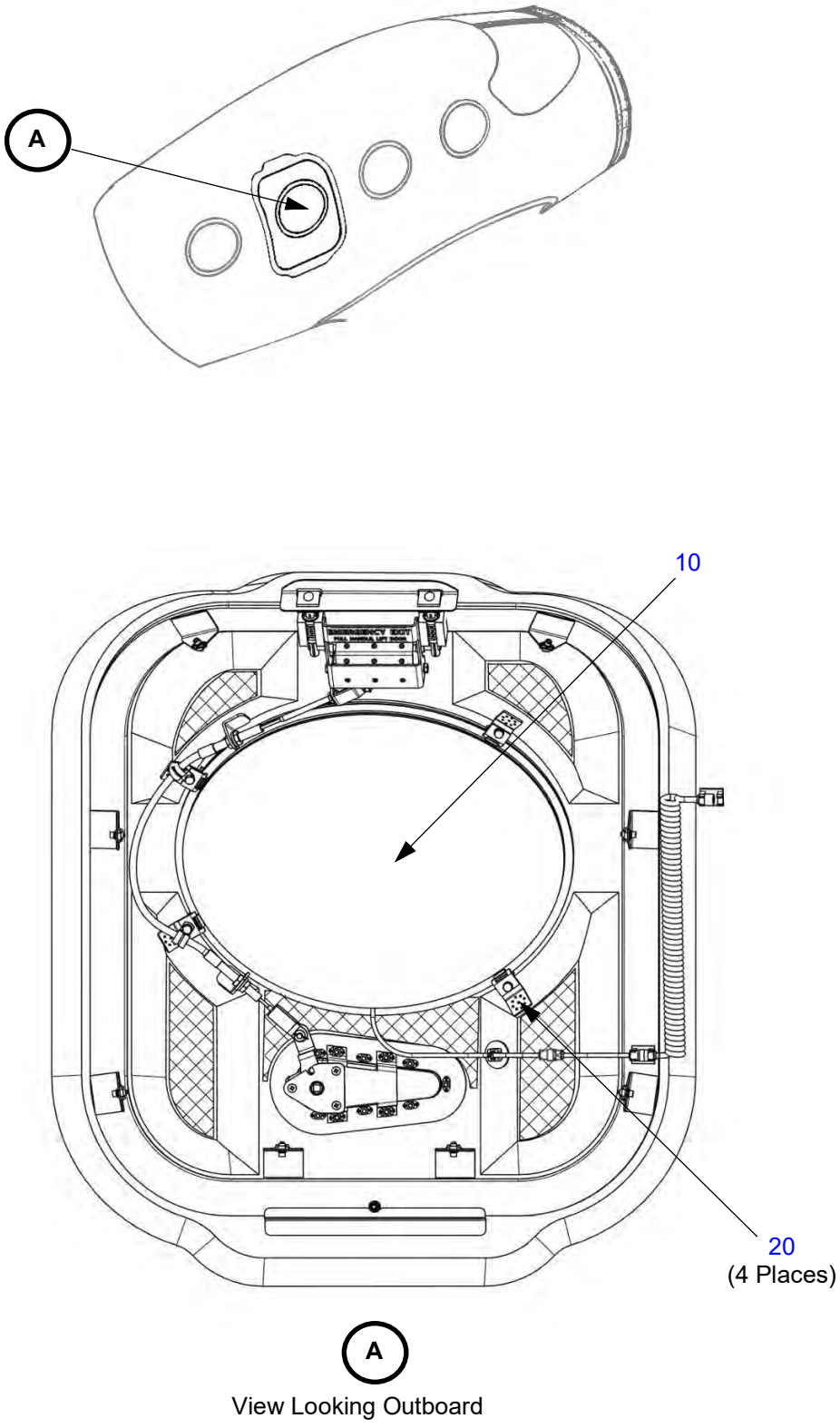

Table 56-30.2: Emergency Exit Window

Figure Item Number	Part Number	Part Name	Effectivity Code	Amount in Assy.
10	PK99562012	Window, Emergency Escape Door	K003 and On	1
20	AK56200012	Assy, Support Brkt, Window, Emergency Escape	K003 and On	4

CHAPTER
57
Wings

This Page Intentionally Left Blank

Table of Contents
and
List of Effective Pages

Chapter/Section	Page Number	Effective Date
57-Title	Page 1	03 Apr 2020
57-Title	Page 2	03 Apr 2020
57-LOEP	Page 1	26 Mar 2024
57-LOEP	Page 2	26 Mar 2024
57-TOC	Page 1	03 Apr 2020
57-TOC	Page 2	03 Apr 2020
	Center	
57-10	Page 1	03 Apr 2020
57-10	Page 2	03 Apr 2020
57-10	Page 3	03 Apr 2020
57-10	Page 4	26 Mar 2024
57-10	Page 5	03 Apr 2020
57-10	Page 6	03 Apr 2020
57-10	Page 7	03 Apr 2020
57-10	Page 8	03 Apr 2020
	Outer	
57-20	Page 1	03 Apr 2020
57-20	Page 2	03 Apr 2020
	Wing Tip	
57-30	Page 1	03 Apr 2020
57-30	Page 2	03 Apr 2020
57-30	Page 3	03 Apr 2020
57-30	Page 4	03 Apr 2020
	Airflow Modification Devices	
57-40	Page 1	03 Apr 2020
57-40	Page 2	26 Mar 2024
57-40	Page 3	03 Apr 2020
57-40	Page 4	03 Apr 2020
57-40	Page 5	03 Apr 2020
57-40	Page 6	03 Apr 2020

Flaps

57-50 ..... Page 1 ..... 03 Apr 2020
57-50 ..... Page 2 ..... 03 Apr 2020
57-50 ..... Page 3 ..... 03 Apr 2020
57-50 ..... Page 4 ..... 03 Apr 2020
57-50 ..... Page 5 ..... 03 Apr 2020
57-50 ..... Page 6 ..... 03 Apr 2020
57-50 ..... Page 7 ..... 03 Apr 2020
57-50 ..... Page 8 ..... 03 Apr 2020

Ailerons

57-60 ..... Page 1 ..... 03 Apr 2020
57-60 ..... Page 2 ..... 26 Mar 2024
57-60 ..... Page 3 ..... 26 Mar 2024
57-60 ..... Page 4 ..... 26 Mar 2024
57-60 ..... Page 5 ..... 03 Apr 2020
57-60 ..... Page 6 ..... 03 Apr 2020
57-60 ..... Page 7 ..... 03 Apr 2020
57-60 ..... Page 8 ..... 03 Apr 2020

CHAPTER 57

Table of Contents

List of Effective Pages ..... 57-LOEP / Page 1
Table of Contents ..... 57-TOC / Page1

Paragraph **Page Number**

Center

Figure 57-10.1: Belly Panels ..... 57-10 / Page 1
Table 57-10.1: Belly Panels ..... 57-10 / Page 4
Figure 57-10.2: Bonding Straps ..... 57-10 / Page 5
Table 57-10.2: Bonding Straps ..... 57-10 / Page 6
Figure 57-10.3: Wing Attachment ..... 57-10 / Page 7
Table 57-10.3: Wing Attachment ..... 57-10 / Page 8

Outer

Figure 57-20.1: Fuel Panels ..... 57-20 / Page 1
Table 57-20.1: Fuel Panels ..... 57-20 / Page 2

Wing Tip

Figure 57-30.1: Wing Tips ..... 57-30 / Page 1
Table 57-30.1: Wing Tip ..... 57-30 / Page 2
Figure 57-30.2: Lightning Protection Bonding Jumpers ..... 57-30 / Page 3
Table 57-30.2: Lightning Protection Bonding Jumpers ..... 57-30 / Page 4

Airflow Modification Devices

Figure 57-40.1: Stall Strips, Swizzle Sticks, and Turbulators ..... 57-40 / Page 1
Table 57-40.1: Stall Strips, Swizzle Sticks, and Turbulators ..... 57-40 / Page 3
Figure 57-40.2: Vortex Generators ..... 57-40 / Page 4
Table 57-40.2: Vortex Generators ..... 57-40 / Page 5

Flaps

Figure 57-50.1: Flaps ..... 57-50 / Page 1
Table 57-50.1: Flaps ..... 57-50 / Page 7

Ailerons

Figure 57-60.1: Aileron and Hinges ..... 57-60 / Page 1
Table 57-60.1: Aileron and Hinges ..... 57-60 / Page 4
Figure 57-60.2: Aileron Trim Tab ..... 57-60 / Page 5
Table 57-60.2: Aileron Trim Tab ..... 57-60 / Page 7

CENTER

Figure 57-10.1: Belly Panels

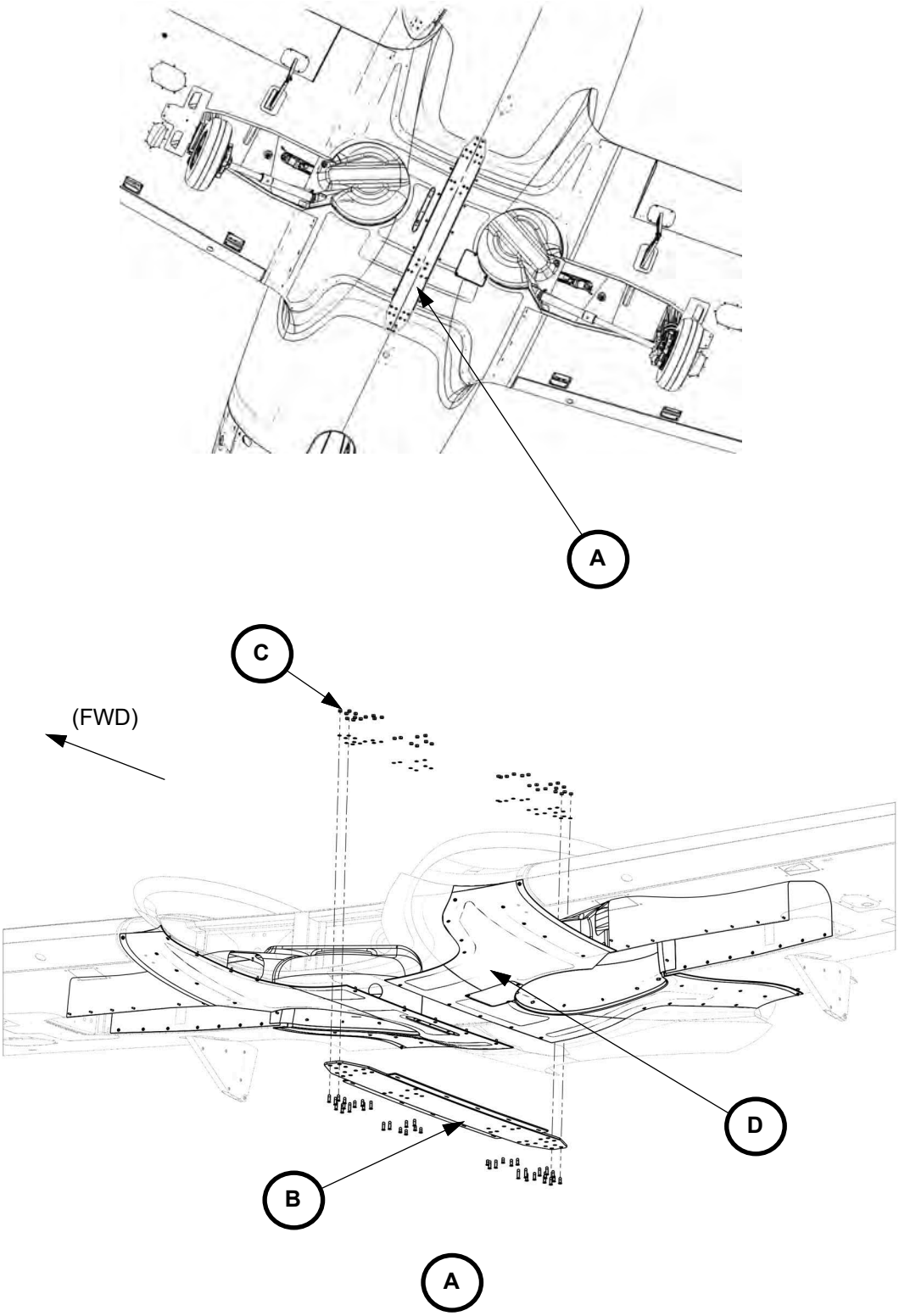

Figure 57-10.1: Belly Panels (Continued)

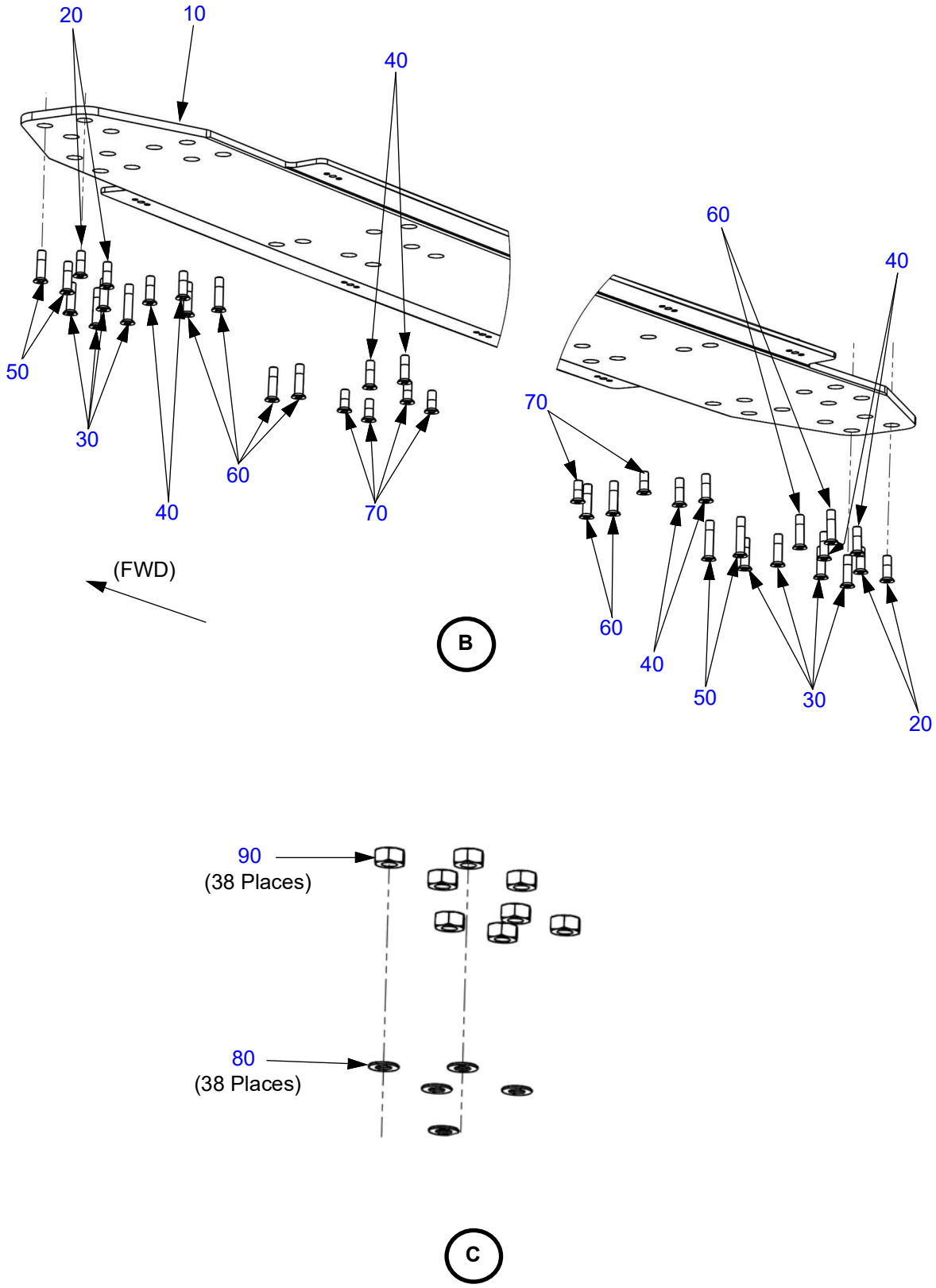

Figure 57-10.1: Belly Panels (Continued)

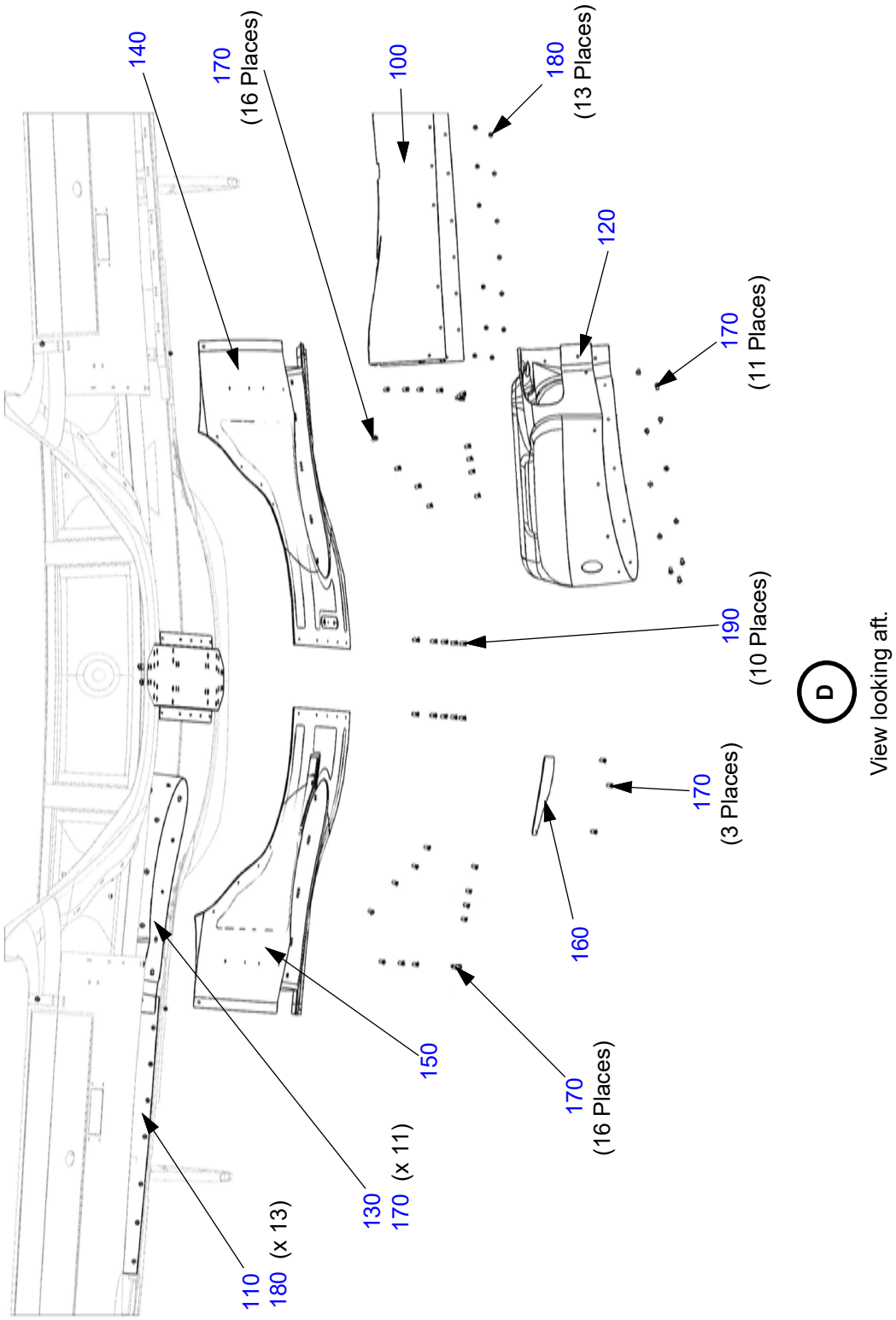

Table 57-10.1: Belly Panels

Figure Item Number	Part Number	Part Name	Effectivity Code	Amount in Assy.
10	AK53101079	Assembly, Beam, Keel	K003 and On	1
20	NAS1204-8	.250 Dia Bolt, .500 Grip, Type II Plating	K003 and On	4
30	NAS1204-11	.250 Dia Bolt, .688 Grip, Type II Plating	K003 and On	8
40	NAS1204-9	.250 Dia Bolt, .562 Grip, Type II Plating	K003 and On	8
50	NAS1204-15	.250 Dia Bolt, .938 Grip, Type II Plating	K003 and On	4
60	NAS1204-12	.250 Dia Bolt, .750 Grip, Type II Plating	K003 and On	8
70	NAS1204-6	.250 Dia Bolt, .375 Grip, Type II Plating	K003 and On	6
80	NAS620C416L	Washer, Reduced OD, CRES, .255 ID x .468 OD	K003 and On	38
90	MS21083N4	Nut, Self-locking, Non-metallic Insert 1/4-28	K003 and On	38
100	PK57107301	Liner, Gear Well, Wing Tunnel, Left	K003 and On	1
110	PK57107302	Liner, Gear Well, Wing, Tunnel, Right	K003 and On	1
120	PK57107303	Liner, Gear Well, Wheelwell, Left	K003 and On	1
130	PK57107304	Liner, Gear Well, Wheelwell, Right	K003 and On	1
140	AK57107300	Assembly, Fairing, Belly Panel, Left	K003 and On	1
150	AK57107400	Assembly, Fairing, Belly Panel, Right	K003 and On	1
160	PK57107102	Fairing, Belly Panel, Hydro Access Panel	K003 and On	1
170	AN525-10R8	Screw, Washer Head, .190 x .500 Lg.	K003 and On	57
180	AN525-832R8 AN525-10R8	Screw, Washer Head, .164 x .500 Lg. Screw, Washer Head, .190 x .500 Lg.	K003 - K006 K007 and On	26
190	AN525-10R9	Screw, Washer Head, .190 x .563 Lg.	K003 and On	10

Figure 57-10.2: Bonding Straps

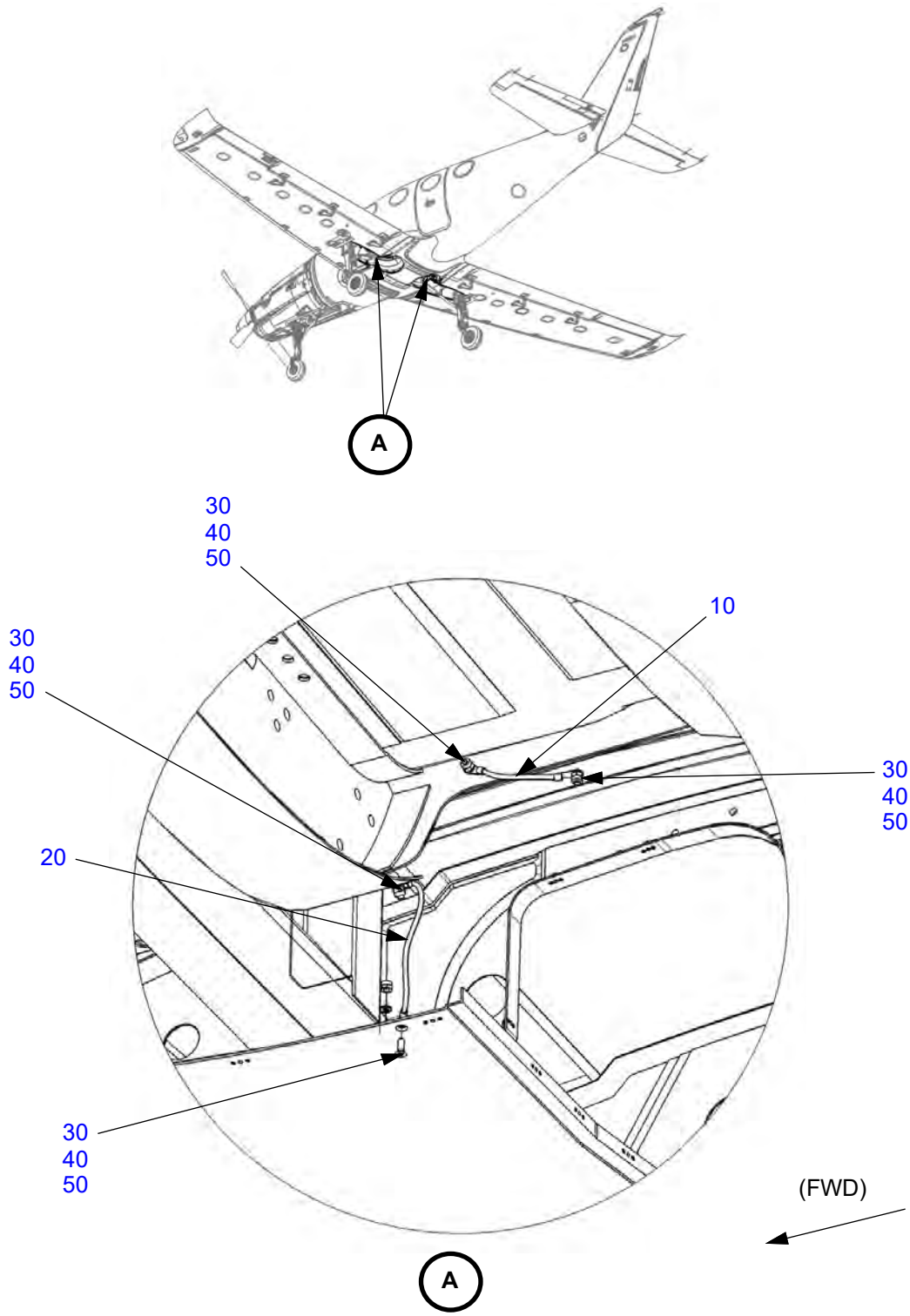

Right side shown, left side opposite.
Shown with belly panels removed.

Table 57-10.2: Bonding Straps

Figure Item Number	Part Number	Part Name	Effectivity Code	Amount in Assy.
10	AK13000105	Ground Strap, Upper Wing Skin To Fuse	K003 and On	2
20	AK13000106	Ground Strap, Lower Wing Skin To Fuse	K003 and On	2
30	MS24694-C98	Screw, Machine, C'sunk, CRES Ø .250 x 23/32	K003 and On	8
40	MS35338-139	Washer, Lock-spring, CRES, Ø.250	K003 and On	8
50	MS21044N4	Nut, Self-locking, Steel 1/4-28	K003 and On	8

Figure 57-10.3: Wing Attachment

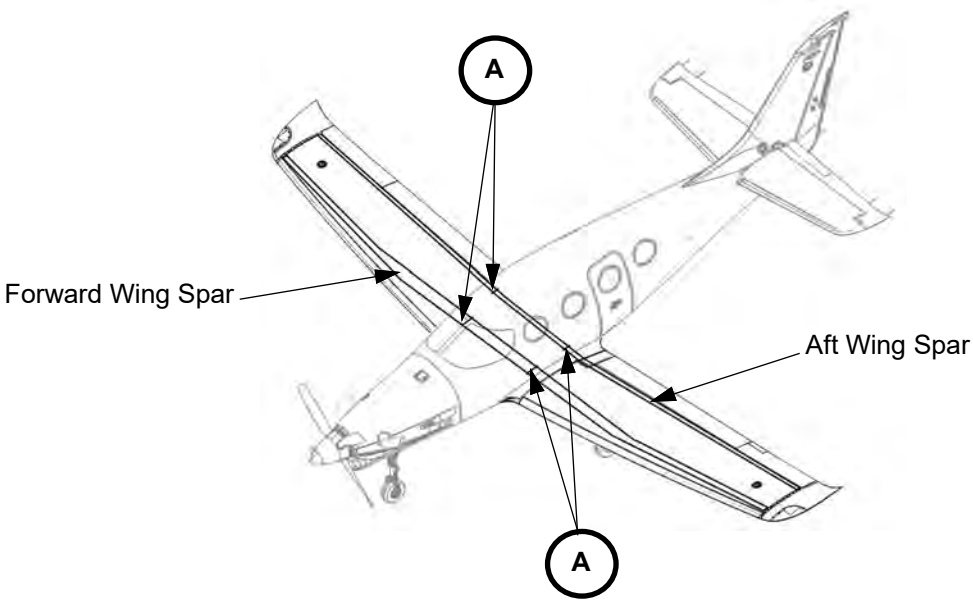

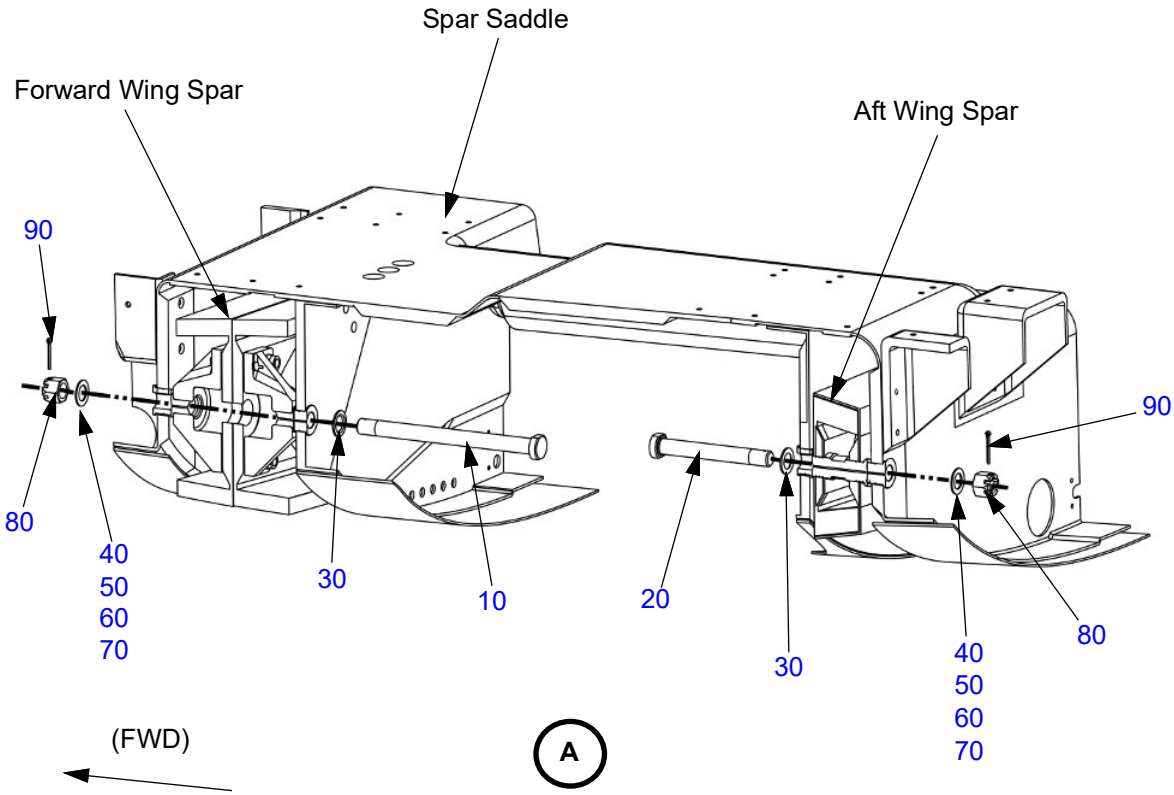

The left side is shown, right side opposite.

Table 57-10.3: Wing Attachment

Figure Item Number	Part Number	Part Name	Effectivity Code	Amount in Assy.
10	PK57000001	Pin, Shear, Wing Attach, Forward	K003 and On	2
20	PK57000002	Pin, Shear, Wing Attach, Aft	K003 and On	2
30	MS20002C12	Washer, Countersunk, High Strength, 3/4" ID	K003 and On	4
40	MS20002-12	Washer, Plain, High Strength, 3/4" ID	K003 and On	4
*50	NAS1149F1216P	Washer, Plain, 3/4" ID	K003 and On	A/R
*60	NAS1149F1232P	Washer, Plain, 3/4" ID	K003 and On	A/R
*70	NAS1149F1290P	Washer, Plain, 3/4" ID	K003 and On	A/R
80	MS17825-12	Nut, Self Locking, 250ºf, Castellated, Steel 3/4-16	K003 and On	4
90	MS24665-355	Pin, Cotter, Cad Steel Ø .125 x 1.25	K003 and On	4

*May be used interchangeably with item 40 beneath the nut to achieve proper grip length. Do not exceed two washers beneath the nut or three washers per bolted joint.

OUTER

Figure 57-20.1: Fuel Panels

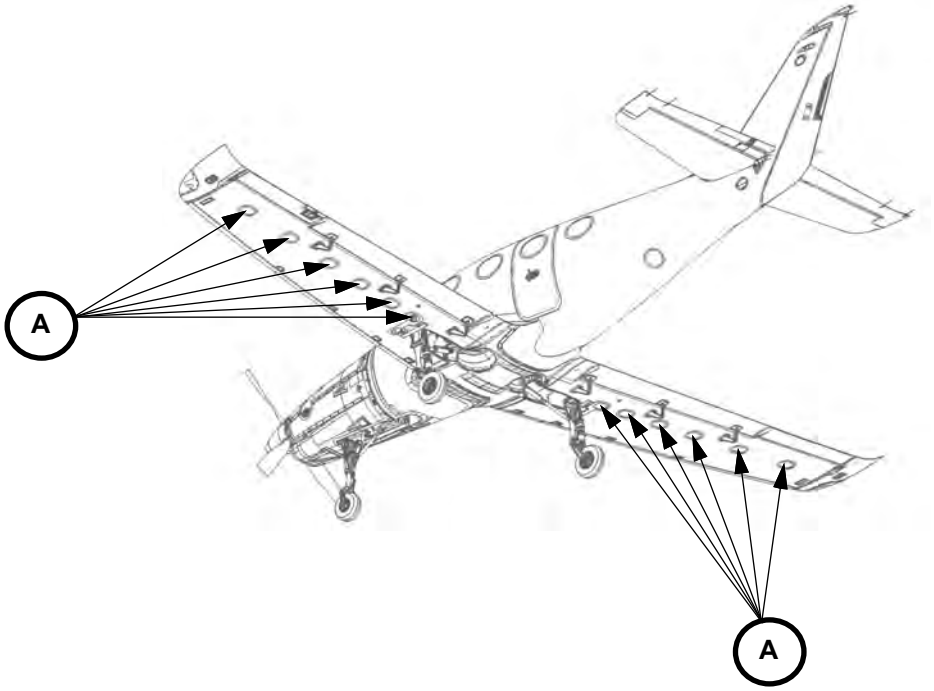

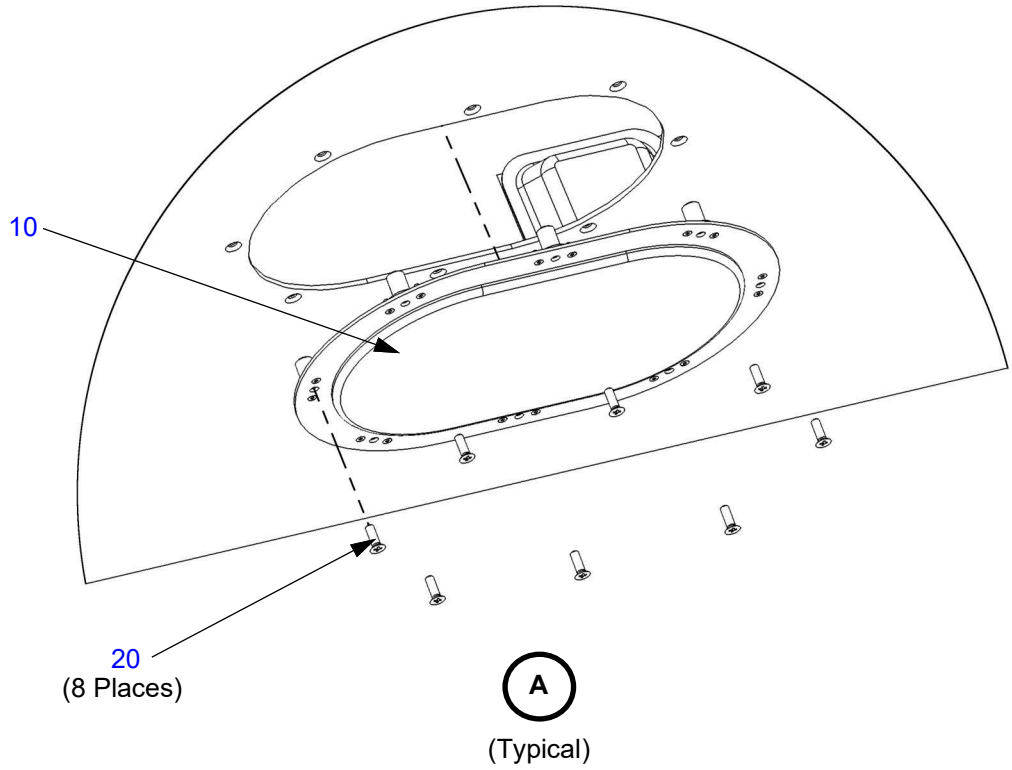

Table 57-20.1: Fuel Panels

Figure Item Number	Part Number	Part Name	Effectivity Code	Amount in Assy.
10	AK57106002	Assembly, Access Panel, Fuel Bay	K003 and On	12
20	MS24694-S5	Screw, Machine, C'sunk Ø .164 X 17/32	K003 and On	96

WING TIP

Figure 57-30.1: Wing Tips

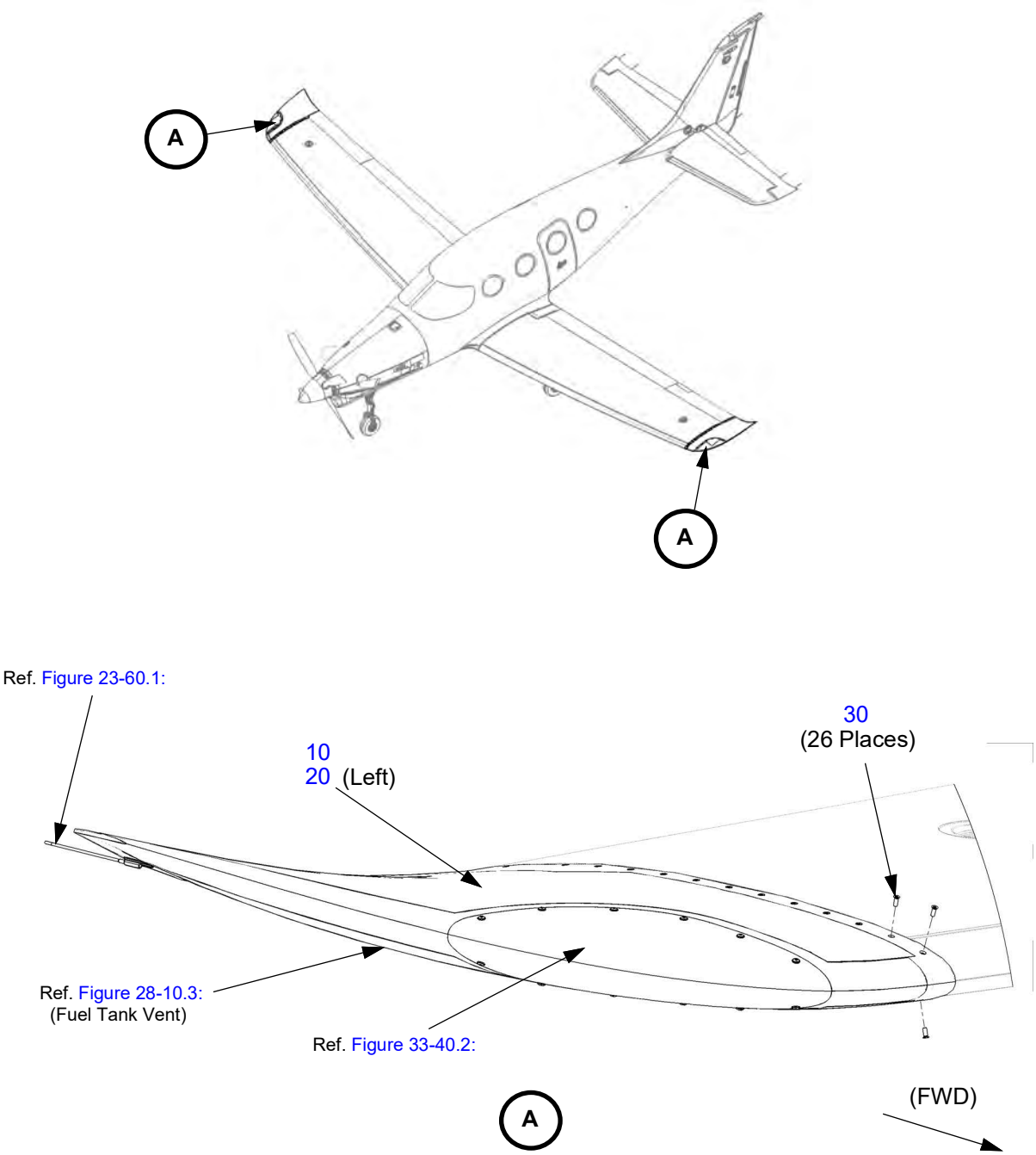

(Right side shown, left side opposite.)

Table 57-30.1: Wing Tip

Figure Item Number	Part Number	Part Name	Effectivity Code	Amount in Assy.
10	AK57302200	Assembly, Wing Tip, Bonded, Right	K003 and On	1
20	AK57301100	Assembly, Wing Tip, Bonded, Left	K003 and On	1
30	MS24694-C51	Screw, Machine, C'sunk, CRES Ø .190 x 19/32	K003 and On	52

Figure 57-30.2: Lightning Protection Bonding Jumpers

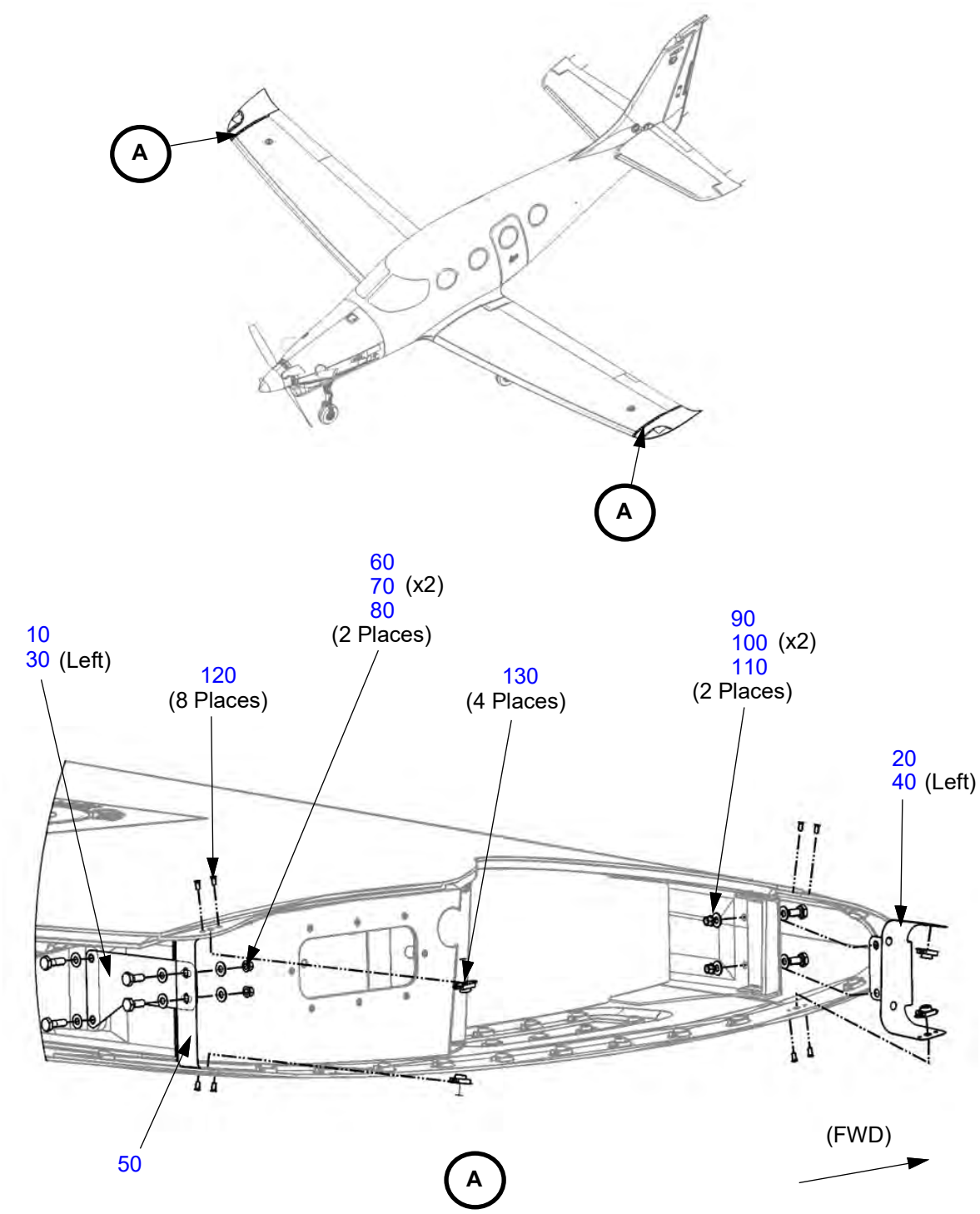

(Right side shown, left side opposite.)

Table 57-30.2: Lightning Protection Bonding Jumpers

Figure Item Number	Part Number	Part Name	Effectivity Code	Amount in Assy.
10	PK13001001	Bonding Jumper, Wing Tip, Aft RH	K003 and On	1
20	PK13001002	Bonding Jumper, Wing Tip, Fwd RH	K003 and On	1
30	PK13001005	Bonding Jumper, Wing Tip, Aft LH	K003 and On	1
40	PK13001006	Bonding Jumper, Wing Tip, Fwd LH	K003 and On	1
50	PK13001007	Bonding Jumper Attach, Wing Tip, Aft	K003 and On	2
60	AN3-4A	Bolt, 10-32 x 17/32" Undrilled	K003 and On	4
70	NAS1149C0332R	Washer, Flat, CRES #10 x .032	K003 and On	8
80	MS21043-3	Nut, Self-locking, 800°, Reduced #10-32	K003 and On	4
90	AN3-3A	Bolt, 10-32 x 15/32" Lg, Undrilled	K003 and On	4
100	NAS1149F0332P	Washer, Flat #10 x .032	K003 and On	8
110	MS21042L3	Nut, Self-locking, 450°, Reduced #10-32	K003 and On	4
120	CCR264CS-3-03	Cherry Pull-thru Rivet, C'sunk, CRES Ø 3/32 x .255	K003 and On	16
130	MS21059L3	Nutplate, Self-locking, Floating Ø .190-32	K003 and On	8

AIRFLOW MODIFICATION DEVICES

Figure 57-40.1: Stall Strips, Swizzle Sticks, and Turbulators

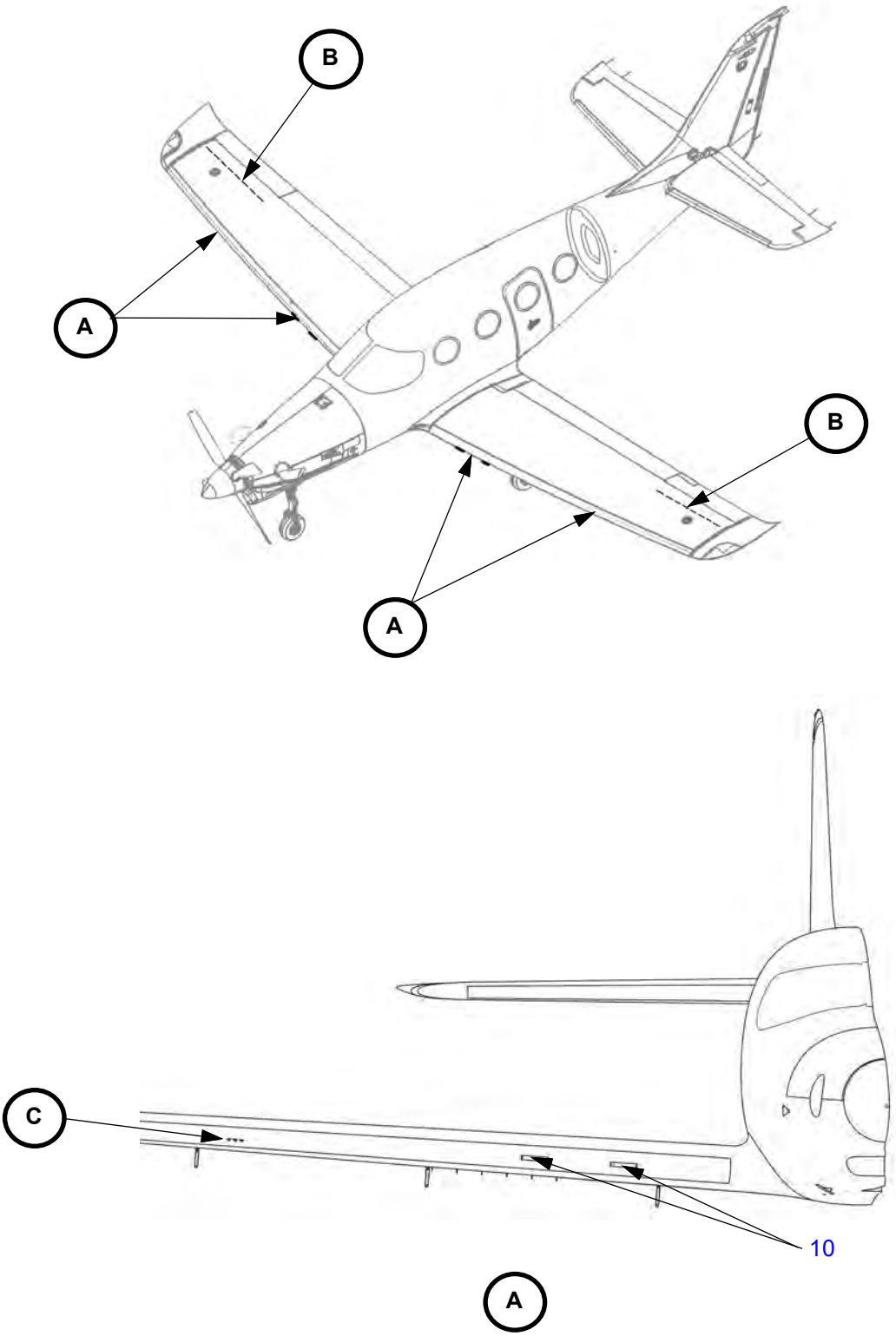

(Right side shown, left side opposite.)

Figure 57-40.1: Stall Strips, Swizzle Sticks, and Turbulators (Continued)

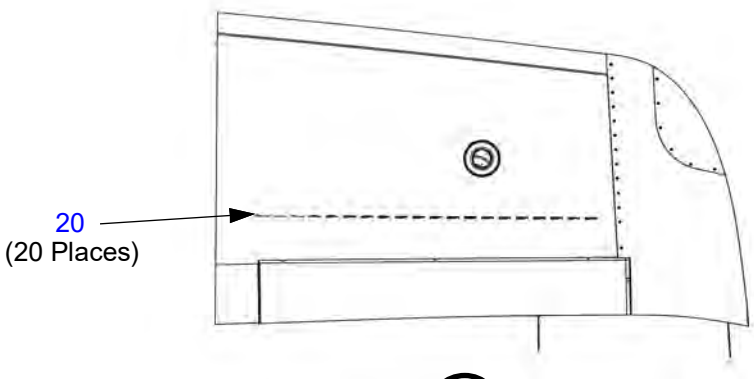

B

(Right side shown, left side opposite.)

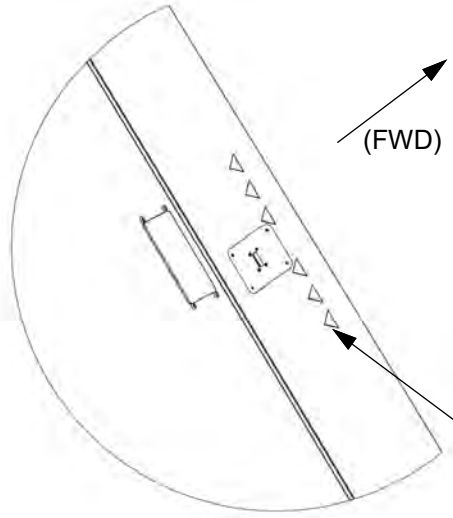

C1

(Right side shown, left side opposite.)
(SN: K003-K055 without SB-0035, view looking up.)

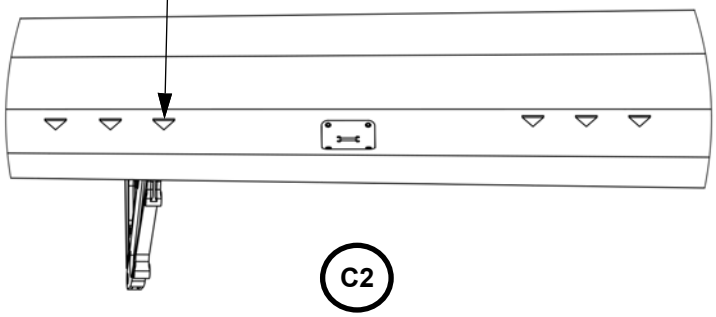

C2

(Right side shown, left side opposite.)
(SN: K056 and on and K003 - K055 with SB-0035, view looking aft.)

Table 57-40.1: Stall Strips, Swizzle Sticks, and Turbulators

Figure Item Number	Part Number	Part Name	Effectivity Code	Amount in Assy.
10	PK00001604	Stall Strip	K003 and On	4
20	PK00001603	Stick, Swizzle	K003 and On	40
30	PK00001606	Turbulator, Leading Edge	K003 and On	12

Figure 57-40.2: Vortex Generators

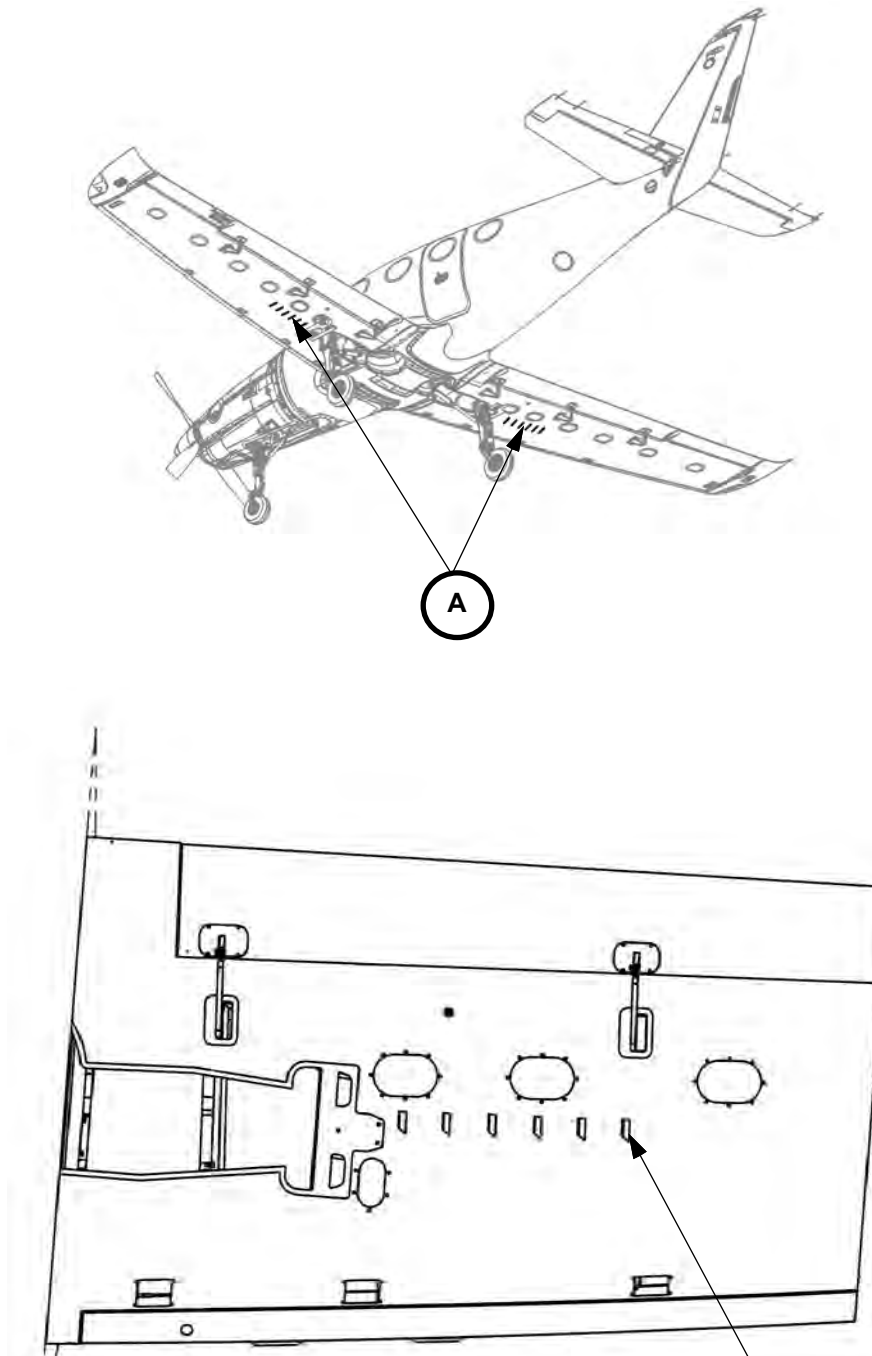

(Right side shown, left side opposite.)

Table 57-40.2: Vortex Generators

Figure Item Number	Part Number	Part Name	Effectivity Code	Amount in Assy.
10	PK00001605	Vortex Generator	K003 and On	12

This Page Intentionally Left Blank

FLAPS

Figure 57-50.1: Flaps

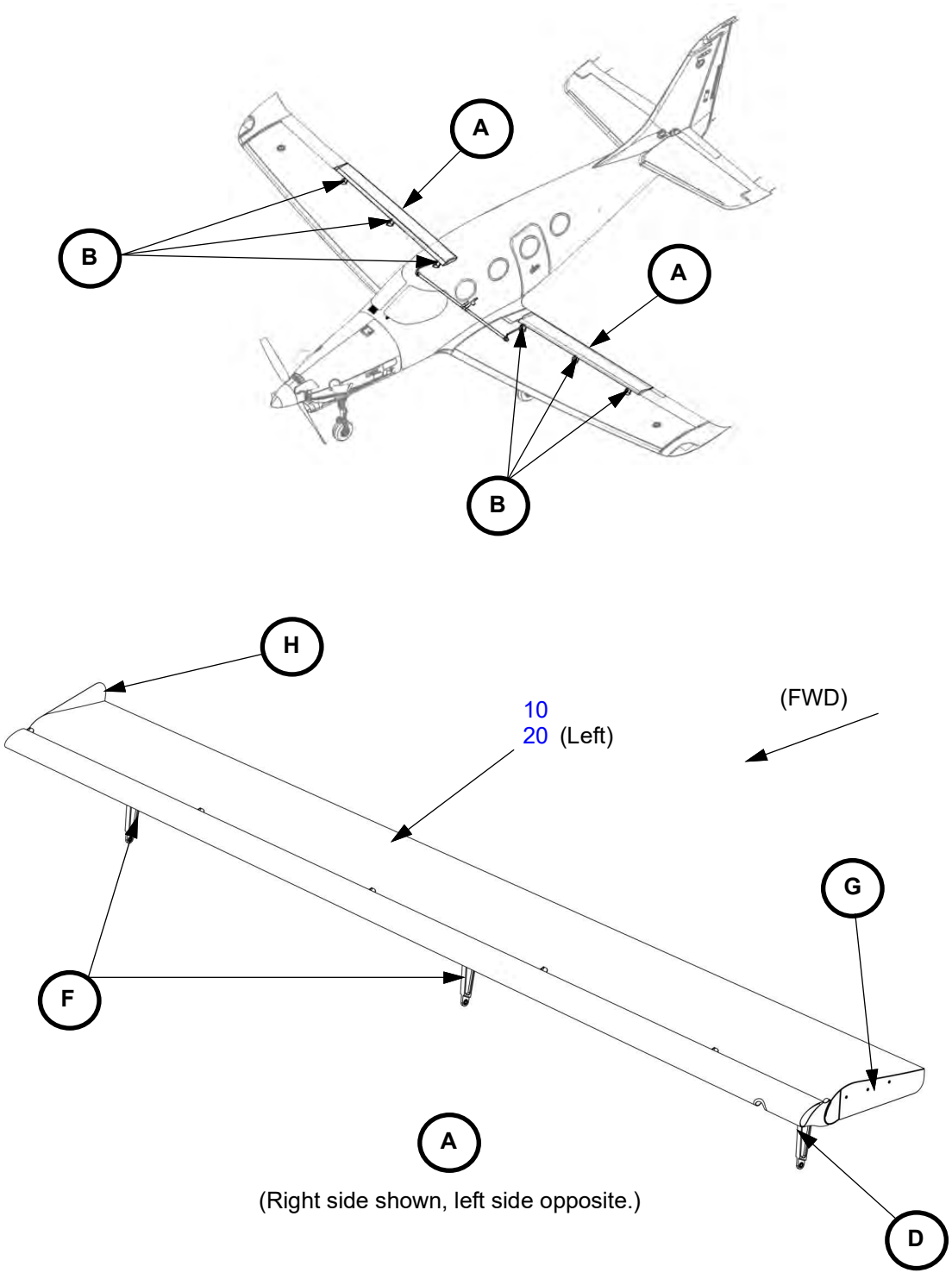

Figure 57-50.1: Flaps (Continued)

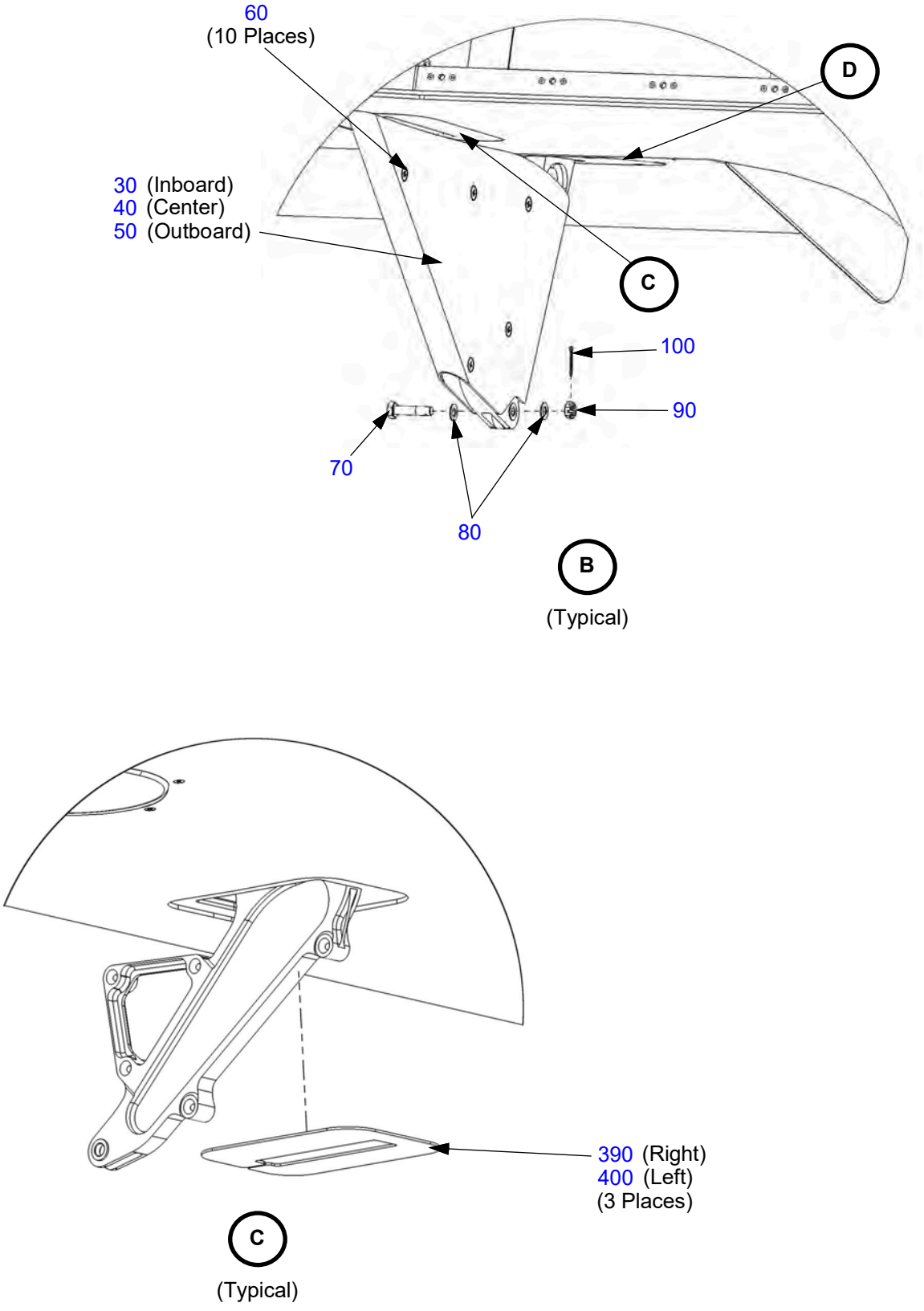

Figure 57-50.1: Flaps (Continued)

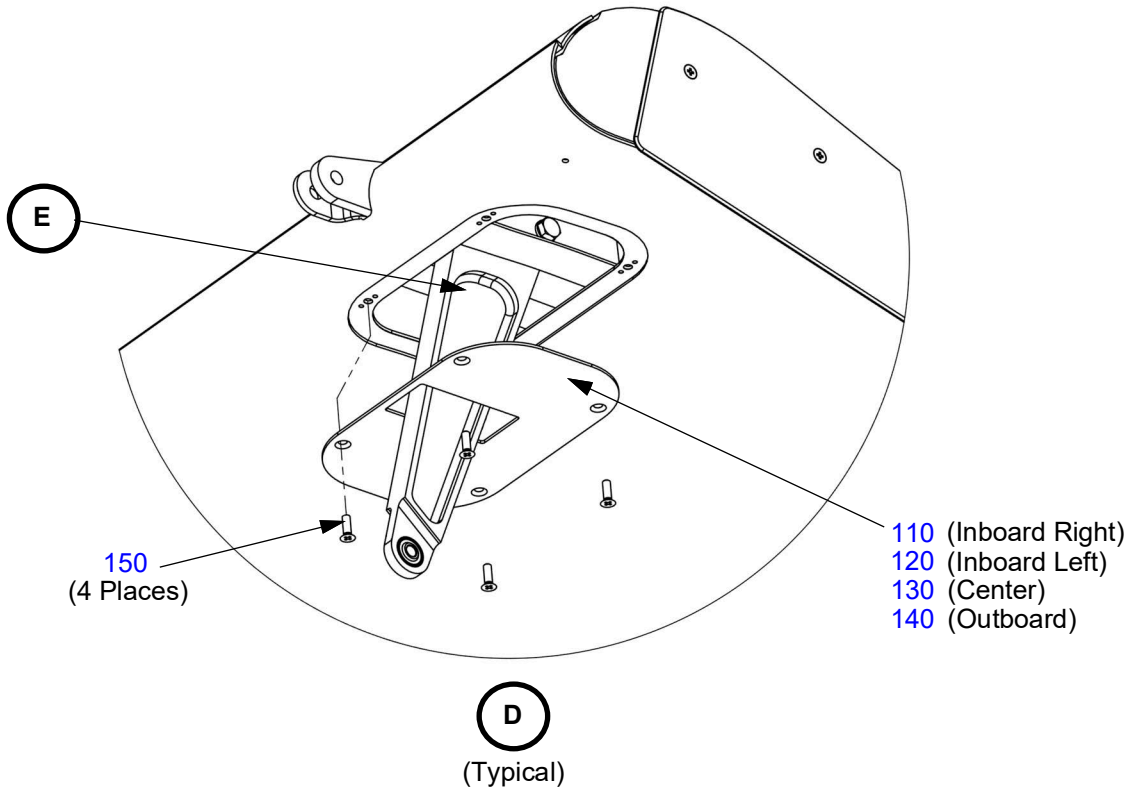

Figure 57-50.1: Flaps (Continued)

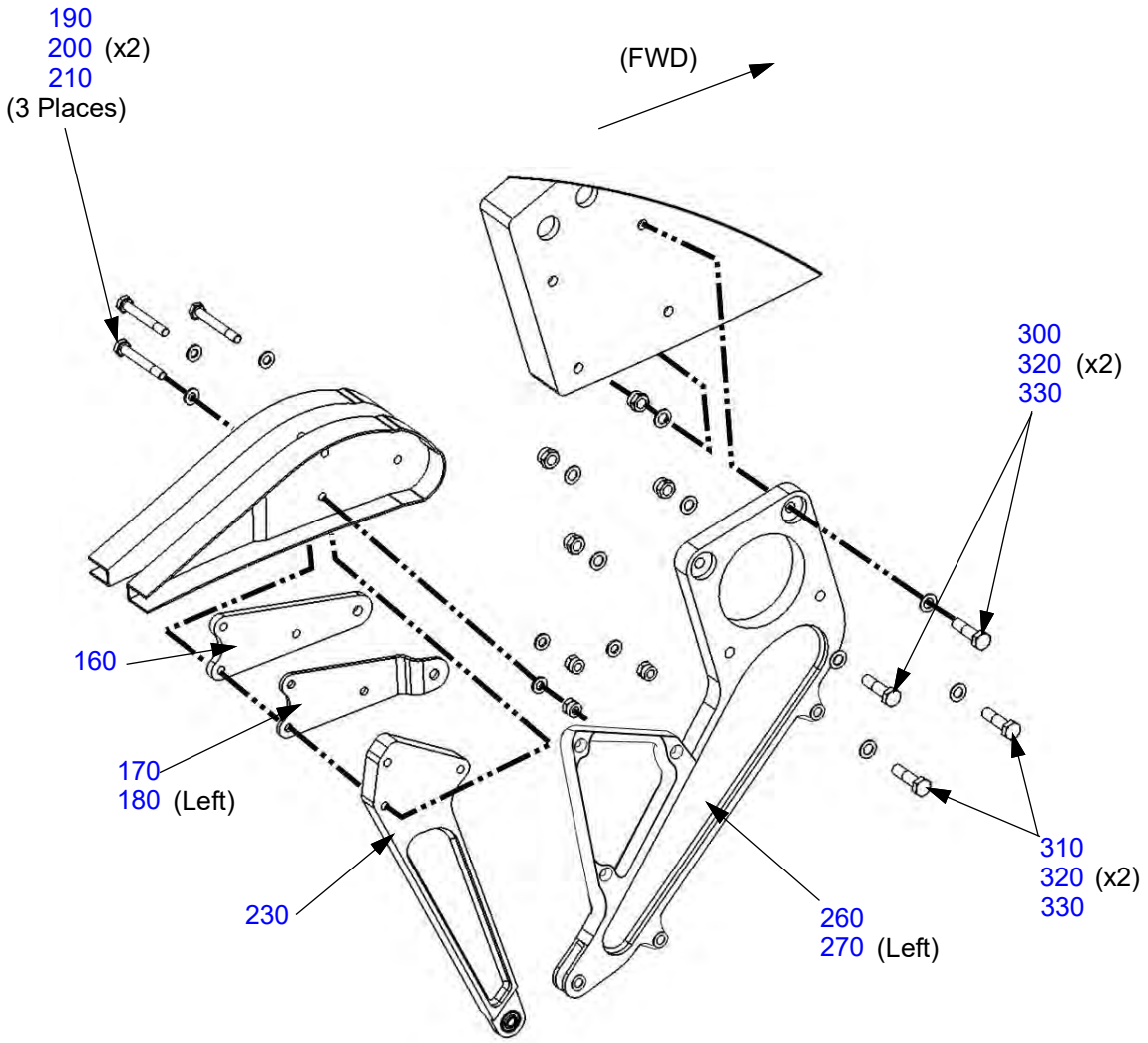

(Right side shown, left side opposite.)

Figure 57-50.1: Flaps (Continued)

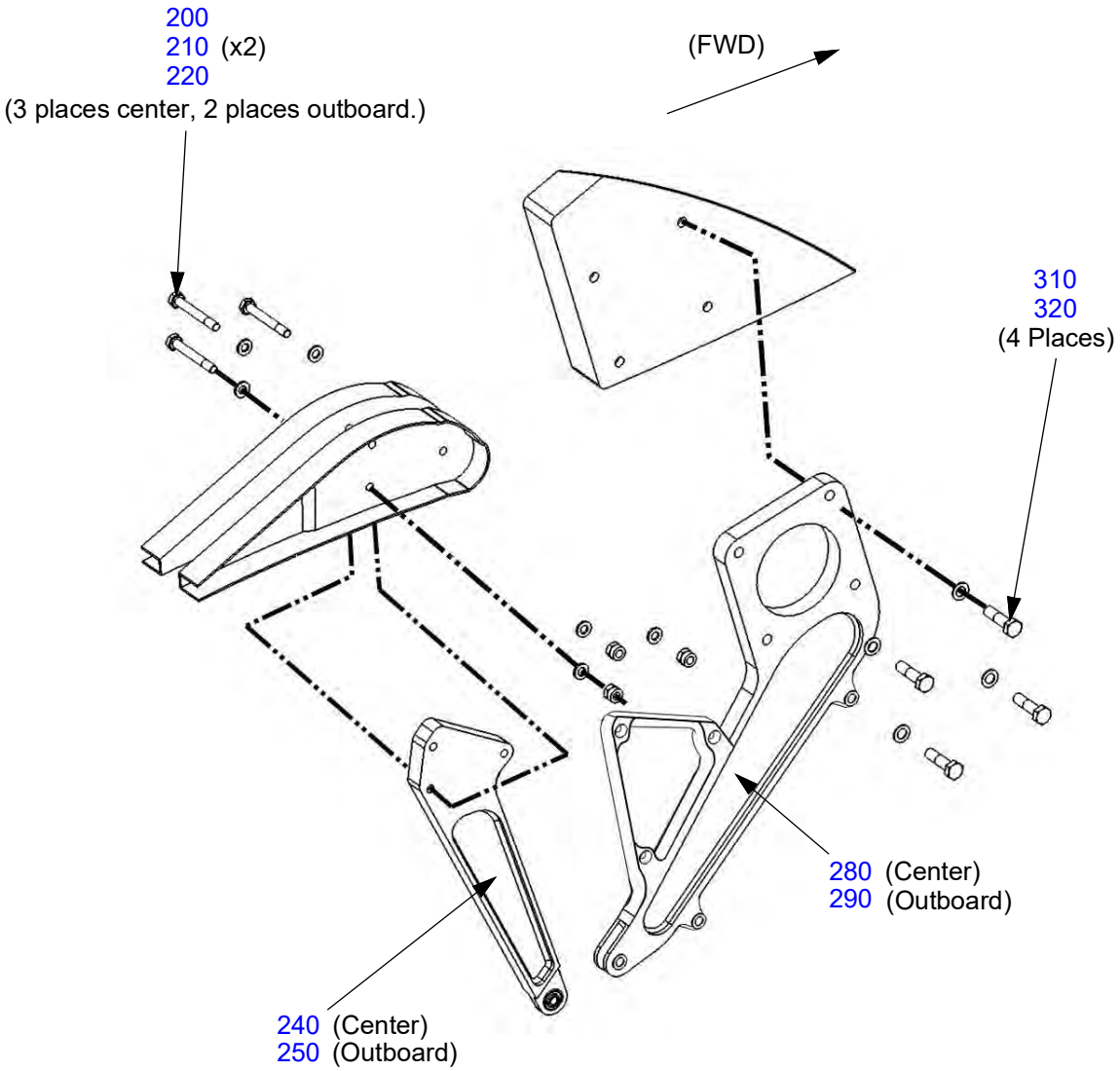

(Right side shown, left side opposite.)
(Typical center and outboard positions.)

Figure 57-50.1: Flaps (Continued)

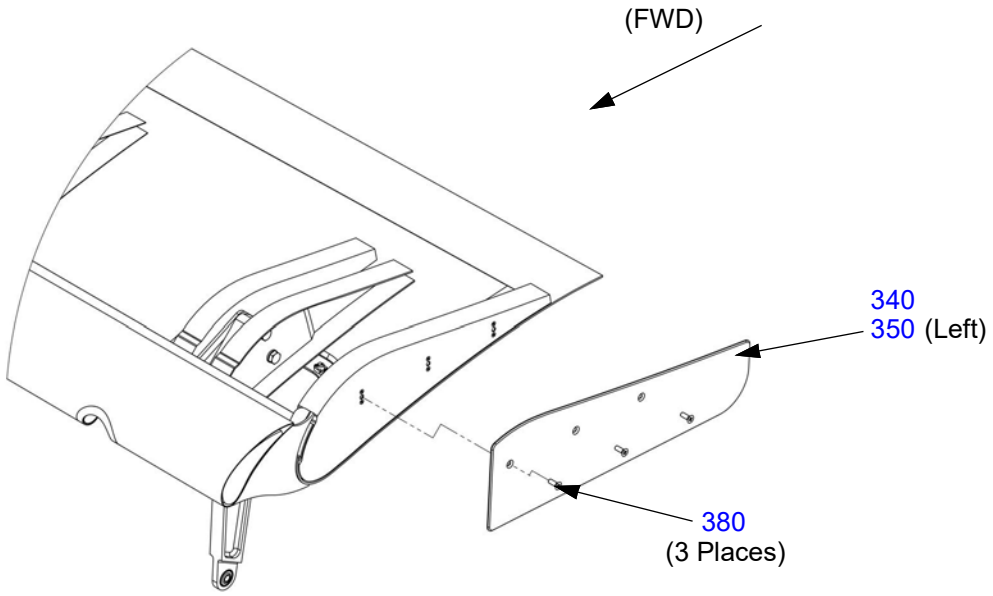

G

(Right side shown, left side opposite.)

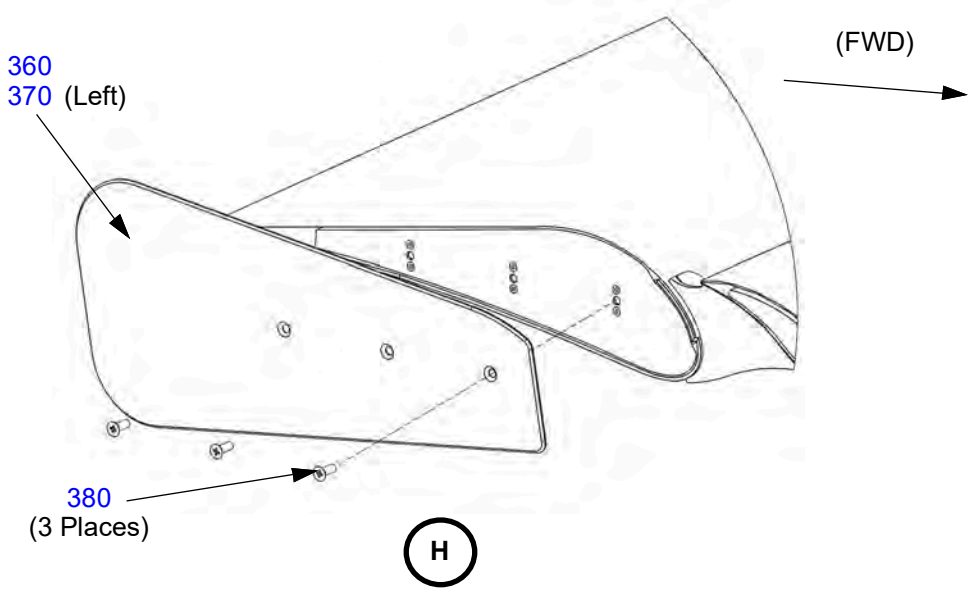

H

(Right side shown, left side opposite.)

Table 57-50.1: Flaps

Figure Item Number	Part Number	Part Name	Effectivity Code	Amount in Assy.
10	AK27501000	Flap General Assembly, Left	K003 and On	1
20	AK27502000	Flap General Assembly, Right	K003 and On	1
30	PK57502101	Fairing - Flap Hinge, Inboard	K003 and On	2
40	PK57502201	Fairing - Flap Hinge, Center	K003 and On	2
50	PK57502301	Fairing - Flap Hinge, Outboard	K003 and On	2
60	MS24694-C48	Screw, Machine, C'sunk, CRES Ø .190 x 13/32	K003 and On	60
70	AN4-11	Bolt, 1/4-28 x 1-5/32" Drilled Shank	K003 and On	6
80	NAS1149F0432P	Washer, Flat 1/4 x .032	K003 and On	12
90	AN320-4	Nut, Castellated, Shear, Steel 1/4-28	K003 and On	6
100	MS24665-134	Pin, Cotter, Cad Steel Ø .062 x .75	K003 and On	6
110	PK27501005	Cover, Inboard Hinge Access, Left	K003 and On	1
120	PK27502005	Cover, Inboard Hinge Access, Right	K003 and On	1
130	PK27501006	Cover, Middle Hinge Access	K003 and On	2
140	PK27501007	Cover, Outboard Hinge Access	K003 and On	2
150	MS24694-S5	Screw, Machine, C'sunk Ø .164 x 17/32	K003 and On	24
160	PK27501004	Horn, Flap Actuation, Inboard	K003 and On	2
170	PK27502008	Horn, Flap Actuation, Outboard Right Flap	K003 and On	1
180	PK27501008	Horn, Flap Actuation, Outboard Left Flap	K003 and On	1
190	AN4-20A	Bolt, 1/4-28 x 2-1/32" Undrilled	K003 and On	6
200	NAS1149F0463P	Washer, Flat 1/4 x .063	K003 and On	32
210	MS21044N4	Nut, Self-locking, Steel 1/4-28	K003 and On	16
220	AN4-15A	Bolt, 1/4-28 x 1-21/32" Undrilled	K003 and On	10
230	AK27501001	Flap Hinge Assy, Inbd	K003 and On	2
240	AK27501002	Flap Hinge Assy, Middle	K003 and On	2
250	AK27501003	Flap Hinge Assy, Outbd	K003 and On	2

Figure Item Number	Part Number	Part Name	Effectivity Code	Amount in Assy.
260	AK57503002	Hinge Assy - Flap, Static, Inbd, RH	K003 and On	1
270	AK57503001	Hinge Assy - Flap, Static, Inbd, LH	K003 and On	1
280	AK57503004	Hinge Assy - Flap, Static, Center	K003 and On	2
290	AK57503006	Hinge Assy - Flap, Static, Outbd	K003 and On	2
300	AN5-11A	Bolt, 5/16-24 x 1-7/32" Undrilled	K003 and On	4
310	AN5-12A	Bolt, 5/16-24 x 1-11/32" Undrilled	K003 and On	20
320	NAS1149F0516P	Washer, Flat 5/16 x .016	K003 and On	32
330	MS21044N5	Nut, Self-locking, Steel 5/16-24	K003 and On	8
340	PK27501009	Fence, Flap, Inboard Left	K003 and On	1
350	PK27502009	Fence, Flap, Inboard Right	K003 and On	1
360	PK27501010	Fence, Flap, Outboard, Left	K003 and On	1
370	PK27502010	Fence, Flap, Outboard, Right	K003 and On	1
380	MS24694-S4	Screw, Machine, C'sunk Ø .164 x 15/32	K003 and On	12
390	PK57106014	Access Panel, Flap Hinge, Right	K003 and On	3
400	PK57106013	Access Panel, Flap Hinge, Left	K003 and On	3

AILERONS

Figure 57-60.1: Aileron and Hinges

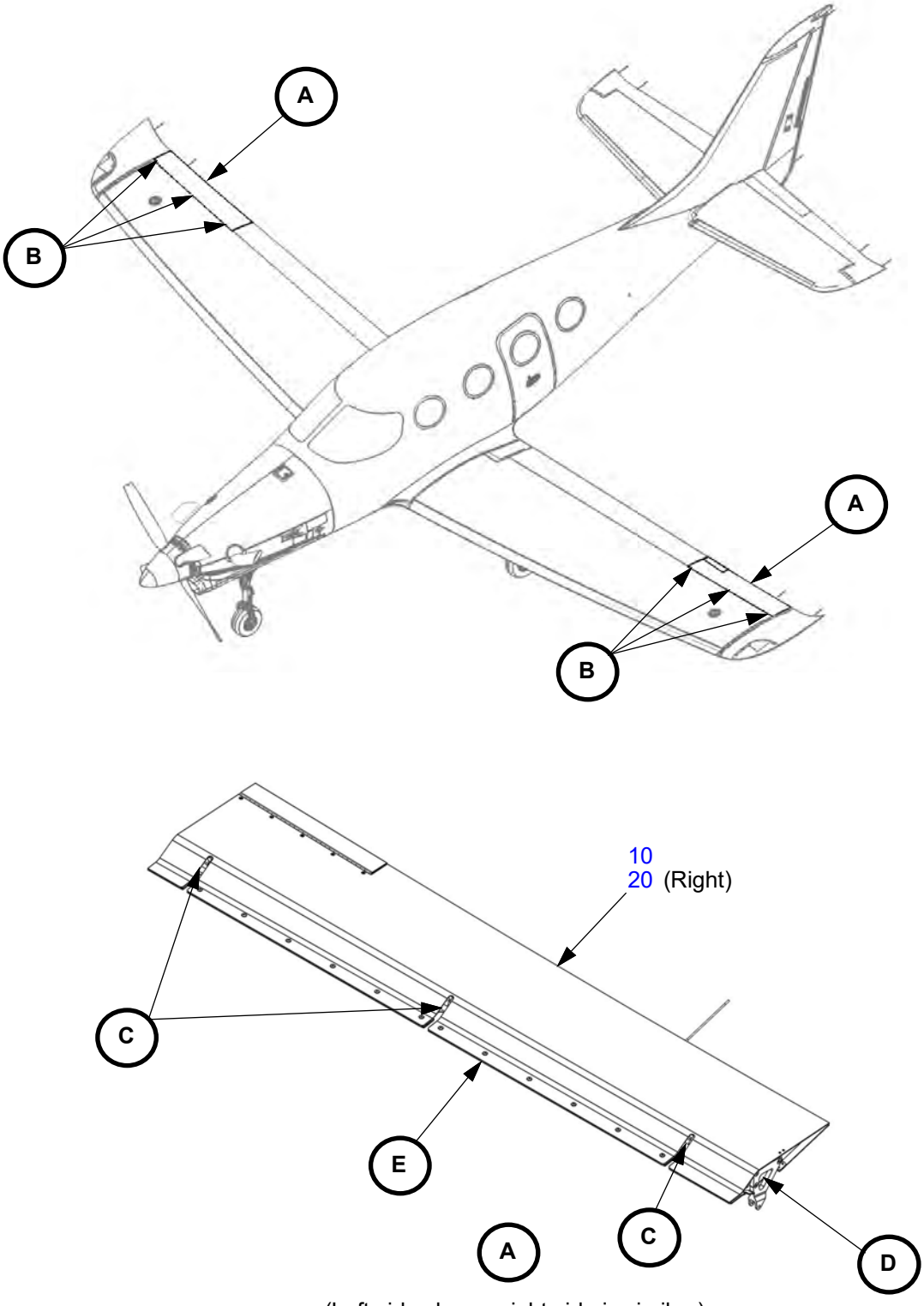

(Left side shown, right side is similar.)

Figure 57-60.1: Aileron and Hinges (Continued)

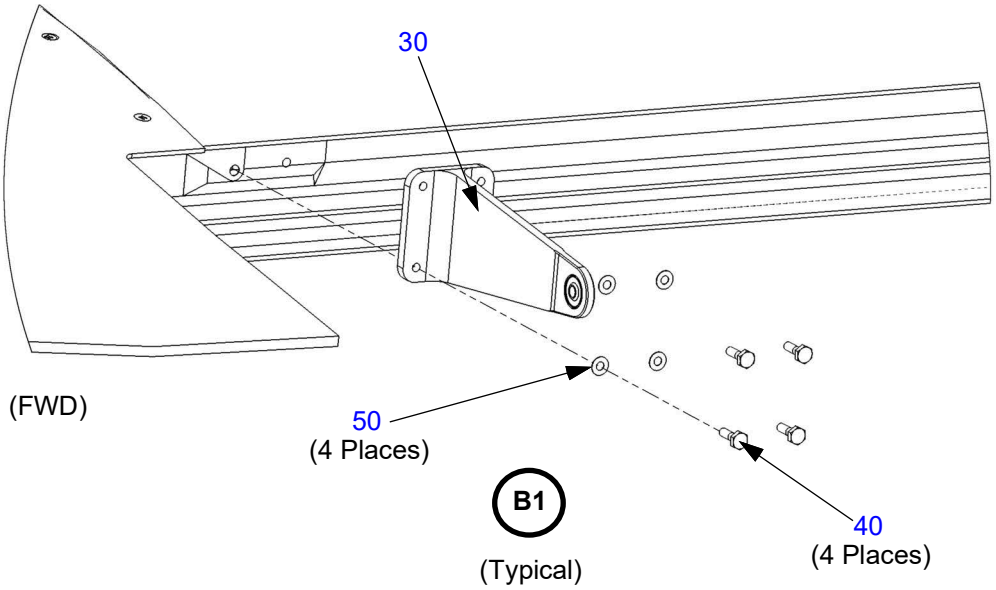

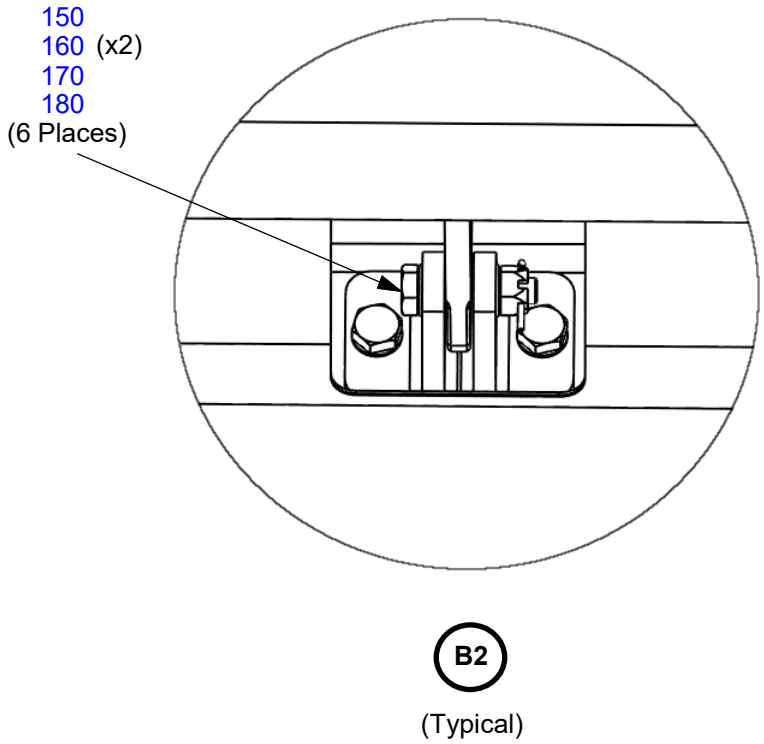

Figure 57-60.1: Aileron and Hinges (Continued)

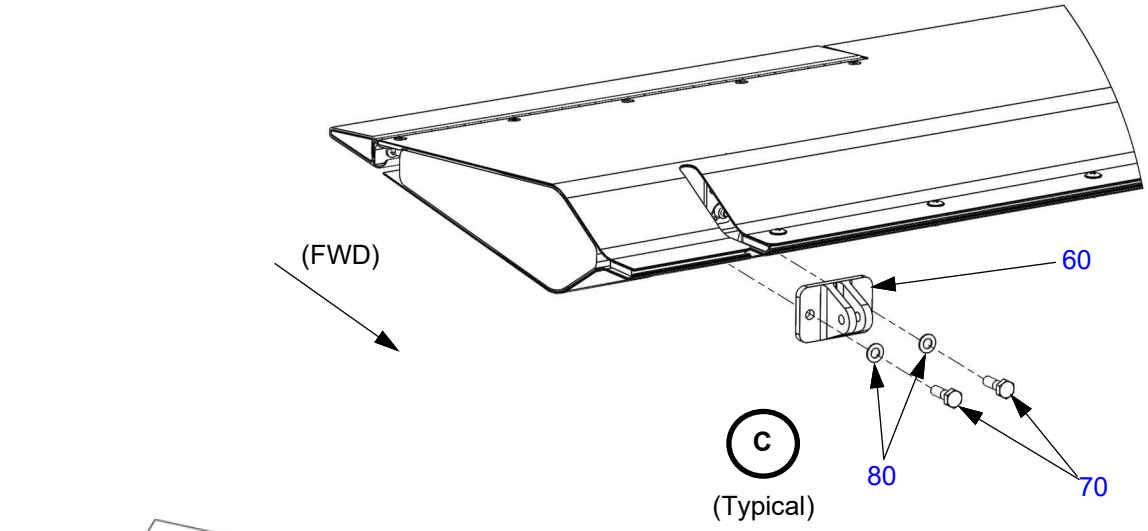

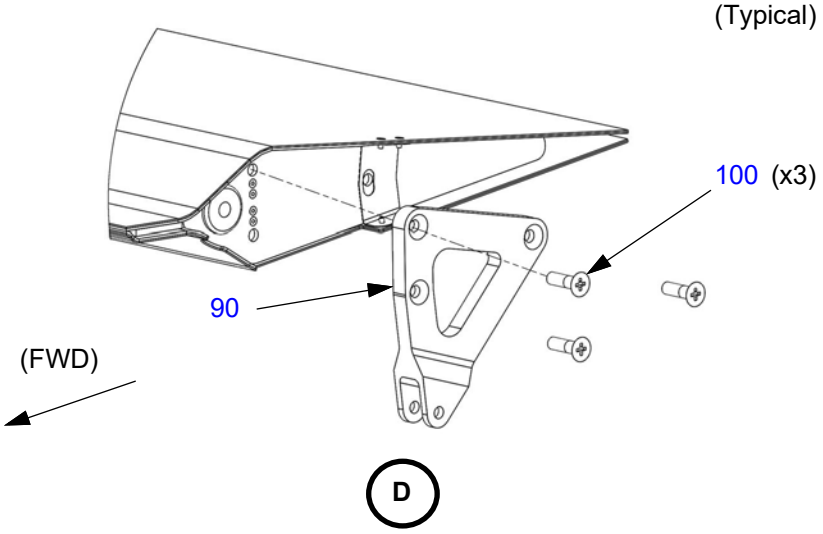

(Left side shown, right side opposite.)

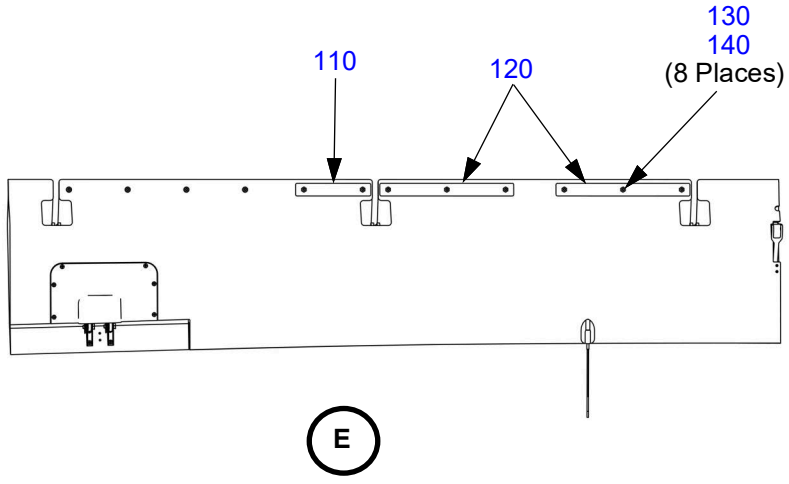

(Left side shown, right side opposite.)

Table 57-60.1: Aileron and Hinges

Figure Item Number	Part Number	Part Name	Effectivity Code	Amount in Assy.
10	AK27102000	Aileron Assy, Left	K003 and On	1
20	AK27101000	Aileron Assy, Right	K003 and On	1
30	AK57503008	Hinge Assy, Aileron, Static	K003 and On	6
40	AN3-5A	Bolt, 10-32 x 21/32" Undrilled	K003 and On	24
50	NAS1149F0316P	Washer, Flat #10 x .016	K003 and On	24
60	PK27101006	Bracket, Hinge, Aileron	K003 and On	6
70	AN4-6A	Bolt, 1/4-28 x 25/32" Undrilled	K003 and On	12
80	NAS1149F0432P	Washer, Flat, 1/4-28 x .032 Thk.	K003 and On	12
90	PK27101003	Horn, Aileron Actuation	K003 and On	2
100	MS24694-S101	Screw, Machine, C'sunk Ø .250 x 29/32	K003 and On	6
110	PK27101011	Mass Balance, Aileron - External, Lower, Type 1	K003 and On	A/R
120	PK27101012	Mass Balance, Aileron - External, Lower, Type 2	K003 and On	A/R
130	AN525-10R10	Screw, Washer Head, .190 x .625 Lg.	K003 and On	16
140	NAS1423C3	Nut, Jam, Drilled, CRES .190-32	K003 and On	16
150	AN4-11	Bolt, 1/4-28 x 1-5/32" Drilled Shank	K003 and On	6
160	NAS1149F0432P	Washer, Flat 1/4 x .032	K003 and On	12
170	AN310-4	Nut, Castellated, Steel 1/4-28	K003 and On	6
180	MS24665-134	Pin, Cotter, Cad Steel Ø .062 x .75	K003 and On	6

Figure 57-60.2: Aileron Trim Tab

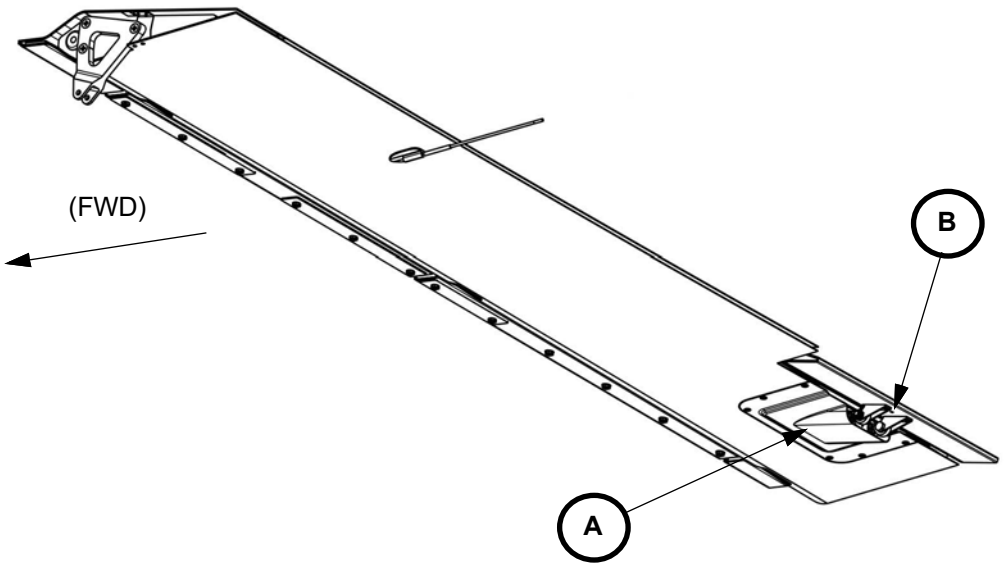

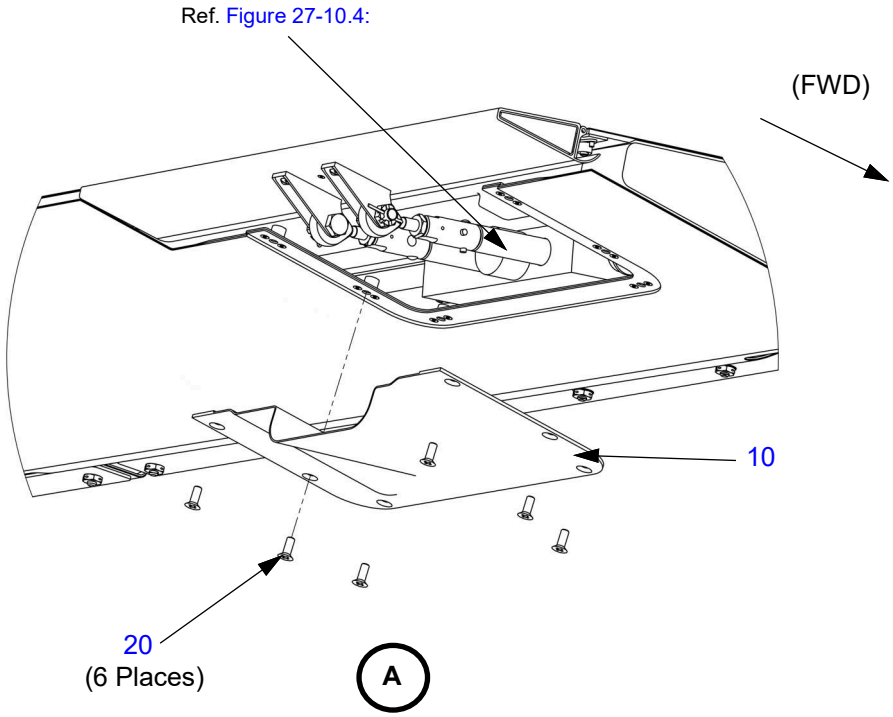

Figure 57-60.2: Aileron Trim Tab (Continued)

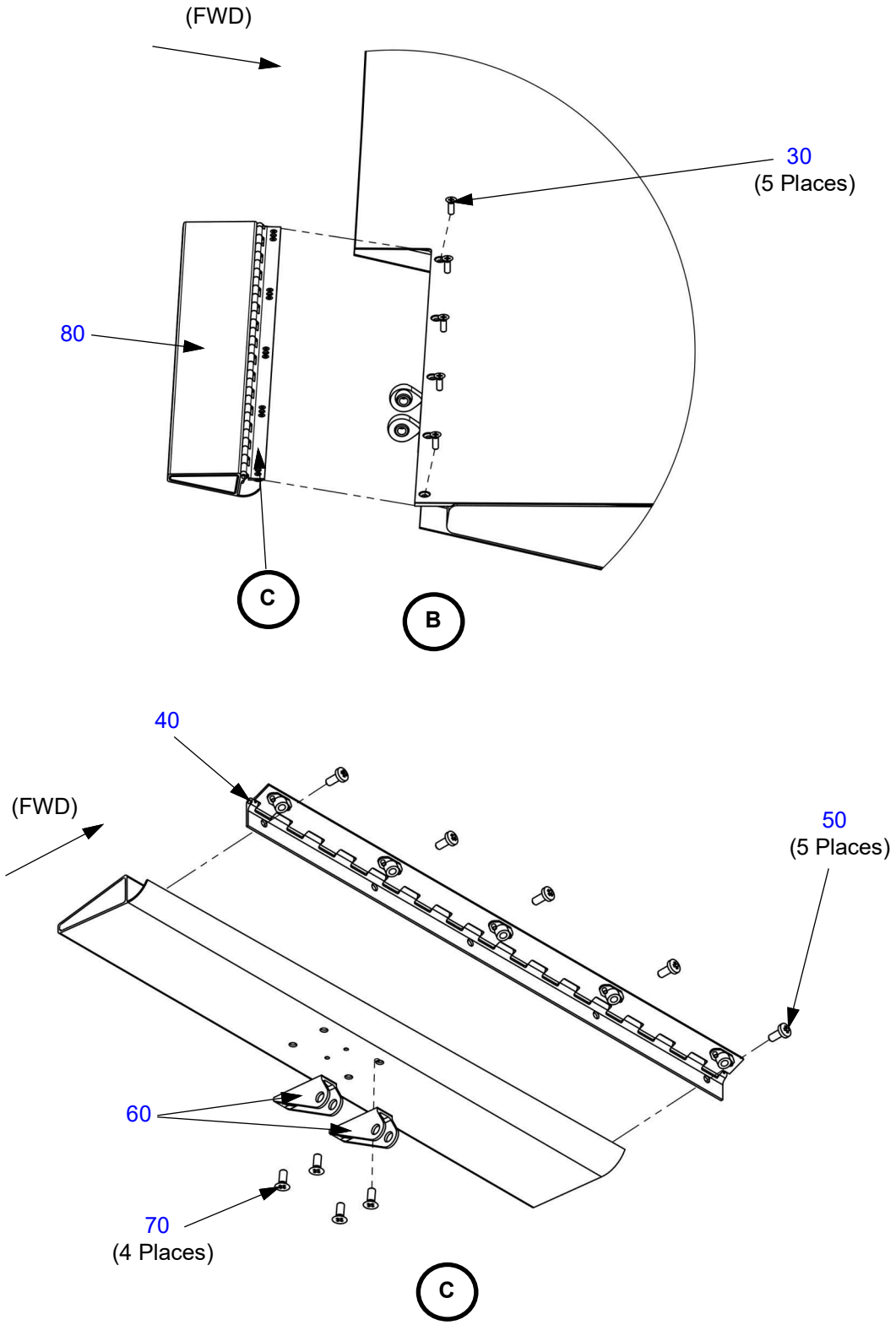

Table 57-60.2: Aileron Trim Tab

Figure Item Number	Part Number	Part Name	Effectivity Code	Amount in Assy.
10	PK27101005	Access Panel, Aileron Trim Tab	K003 and On	1
20	MS24693-S49	Screw, Machine, C'sunk Ø .164 x 0.437	K003 and On	6
30	MS24694-S4	Screw, Machine, C'sunk Ø .164 x 15/32	K003 and On	5
40	AK27101201	Hinge Assy, Trim Tab, Aileron	K003 and On	1
50	MS27039-0806	Screw, Pan Head, .164 x .406 Lg.	K003 and On	5
60	PK27101204	Horn, Aileron Trim Tab	K003 and On	2
70	MS24694-S3	Screw, Machine, C'sunk Ø .164 x 13/32	K003 and On	4
80	AK27101200	Trim Tab Assy, Aileron, Co- Cured	K003 and On	1

This Page Intentionally Left Blank

CHAPTER 61

Propeller

This Page Intentionally Left Blank

Table of Contents
and
List of Effective Pages

Chapter/Section	Page Number	Effective Date
61-Title	Page 1	03 Apr 2020
61-Title	Page 2	03 Apr 2020
61-LOEP	Page 1	14 Jul 2021
61-LOEP	Page 2	03 Apr 2020
61-TOC	Page 1	14 Jul 2021
61-TOC	Page 2	03 Apr 2020
4 Bladed Propeller Assembly		
61-10	Page 1	14 Jul 2021
61-10	Page 2	14 Jul 2021
61-10	Page 3	14 Jul 2021
61-10	Page 4	14 Jul 2021
5 Bladed Propeller Assembly		
61-11	Page 1	14 Jul 2021
61-11	Page 2	14 Jul 2021
61-11	Page 3	14 Jul 2021
61-11	Page 4	14 Jul 2021
Controlling		
61-20	Page 1	03 Apr 2020
61-20	Page 2	03 Apr 2020

This Page Intentionally Left Blank

CHAPTER 61

Table of Contents

List of Effective Pages ..... 61-LOEP / Page 1
Table of Contents ..... 61-TOC / Page1

Paragraph **Page Number**

4 Bladed Propeller Assembly
(SN: K003-K010)

Figure 61-10.1: 4 Bladed Propeller Assembly ..... 61-10 / Page 1
Table 61-10.1: 4 Bladed Propeller Assembly ..... 61-10 / Page 4

5 Bladed Propeller Assembly
(SN: K011 and On, and K003-K010 with SB-0017)

Figure 61-11.1: 5 Bladed Propeller Assembly ..... 61-11 / Page 1
Table 61-11.1: 5 Bladed Propeller Assembly ..... 61-11 / Page 3

Controlling

Figure 61-20.1: Propeller Governor ..... 61-20 / Page 1
Table 61-20.1: Propeller Governor ..... 61-20 / Page 2

This Page Intentionally Left Blank

4 BLADED PROPELLER ASSEMBLY

Figure 61-10.1: 4 Bladed Propeller Assembly

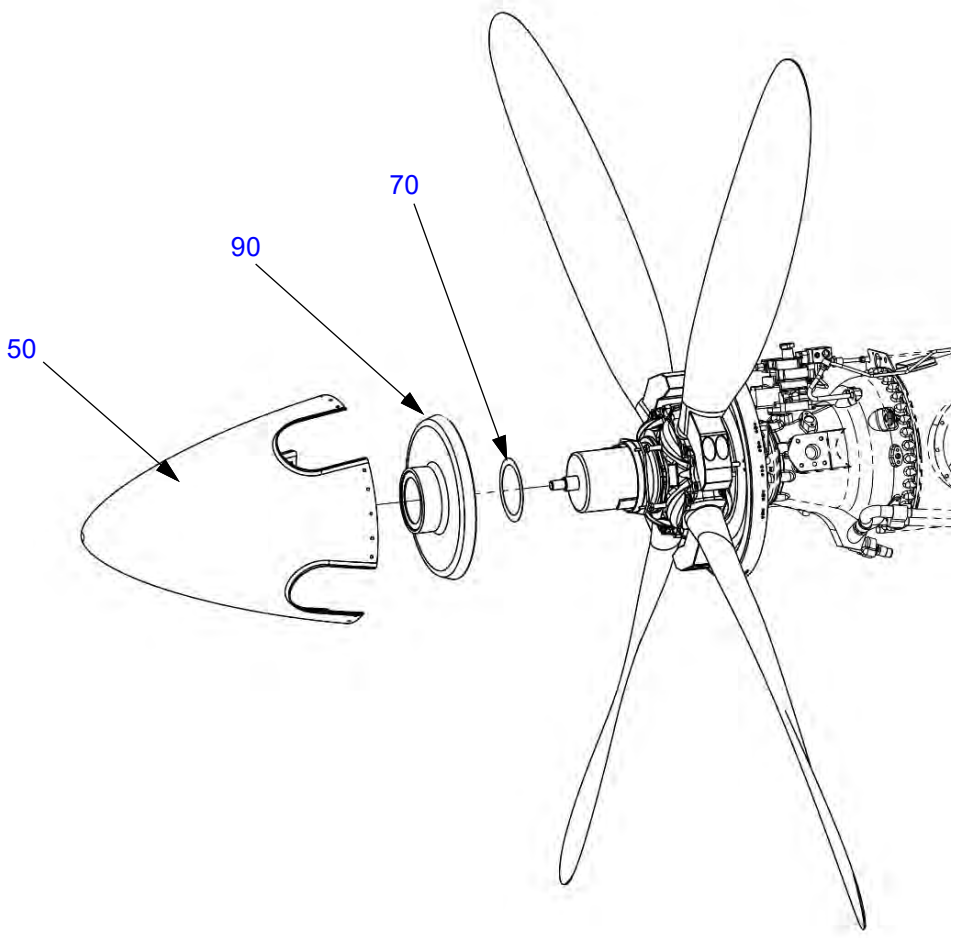

Figure 61-10.1: 4 Bladed Propeller Assembly (Continued)

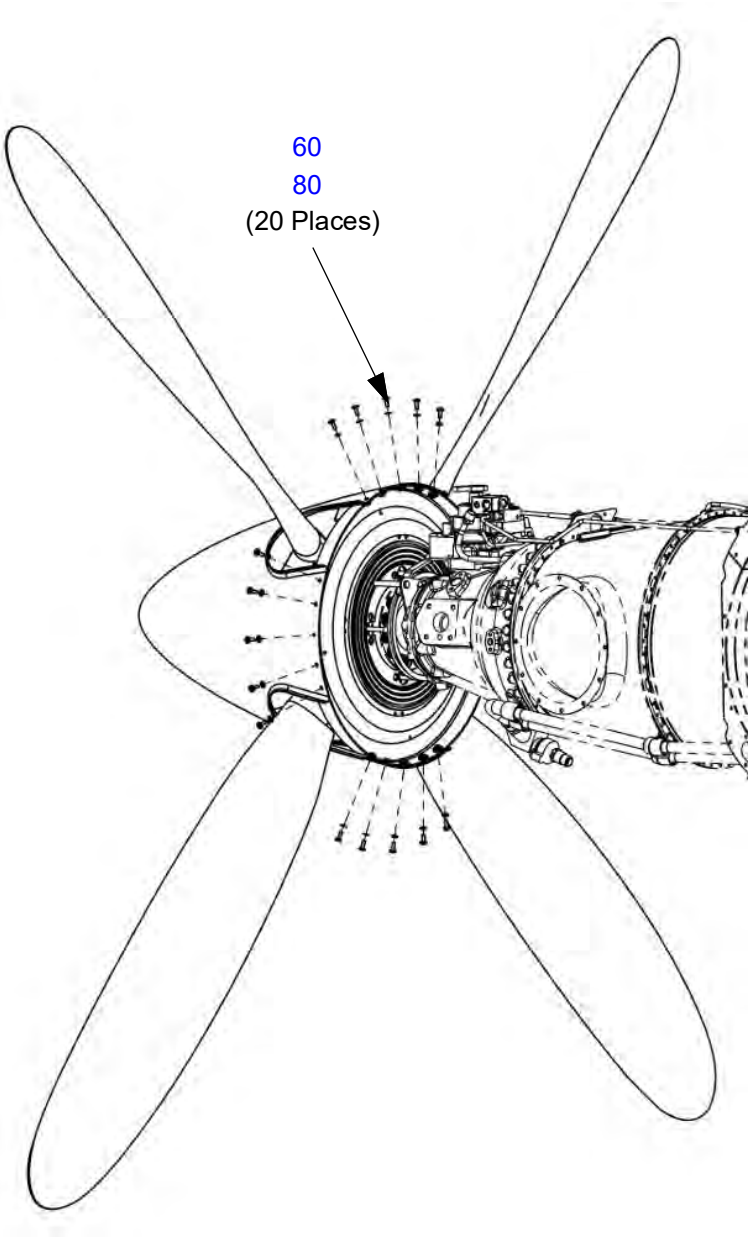

Figure 61-10.1: 4 Bladed Propeller Assembly (Continued)

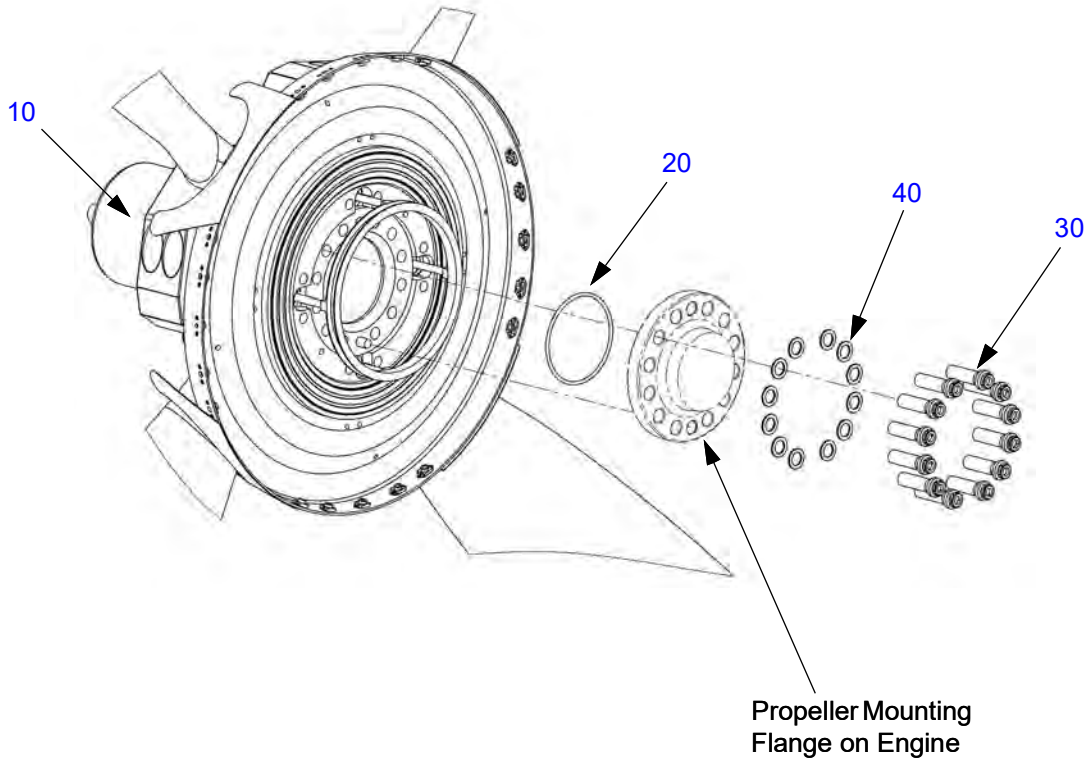

Table 61-10.1: 4 Bladed Propeller Assembly

Figure Item Number	Part Number	Part Name	Effectivity Code	Amount in Assy.
10	HC-E4A-3D/ E10477SK	Assembly, Propeller, Hub, Blades, Hartzell	K003-K010	1
20	C-3317-239-2	O-ring, Propeller, Engine Interface, Hartzell	K003-K010	1
30	B3347	Bolt, 12 Point, 9/16-18, Hartzell	K003-K010	12
40	A2048-2	Washer, .570 x .063 Thk, Hartzell	K003-K010	12
50	D-5560-1P	Dome, 4-blade, Hartzell	K003-K010	1
60	A1020	Washer, Fiber, Hartzell	K003-K010	20
70	B-632	Spacer, Hartzell	K003-K010	A/R
80	B3845-8	Screw, 10-32, Truss Head, (Dome Mounting), Hartzell	K003-K010	20
90	C-5562	Filler Plate, Hartzell	K003-K010	1

5 BLADED PROPELLER ASSEMBLY

Figure 61-11.1: 5 Bladed Propeller Assembly

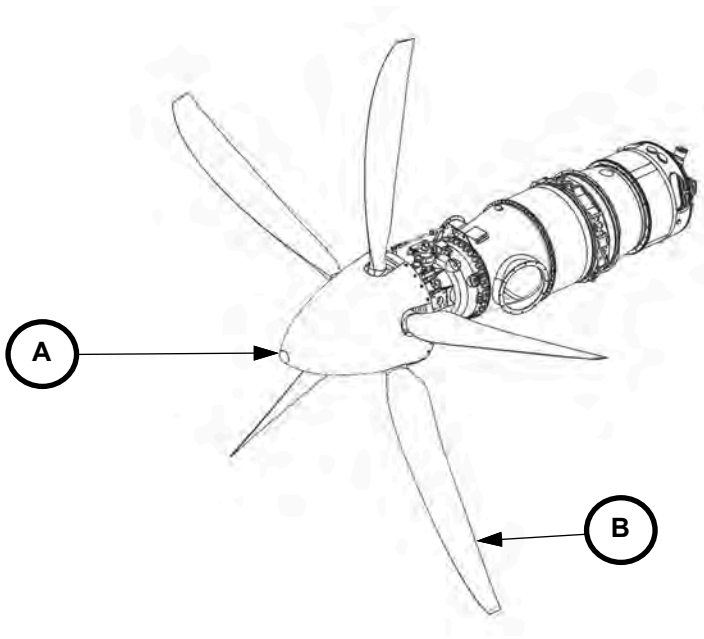

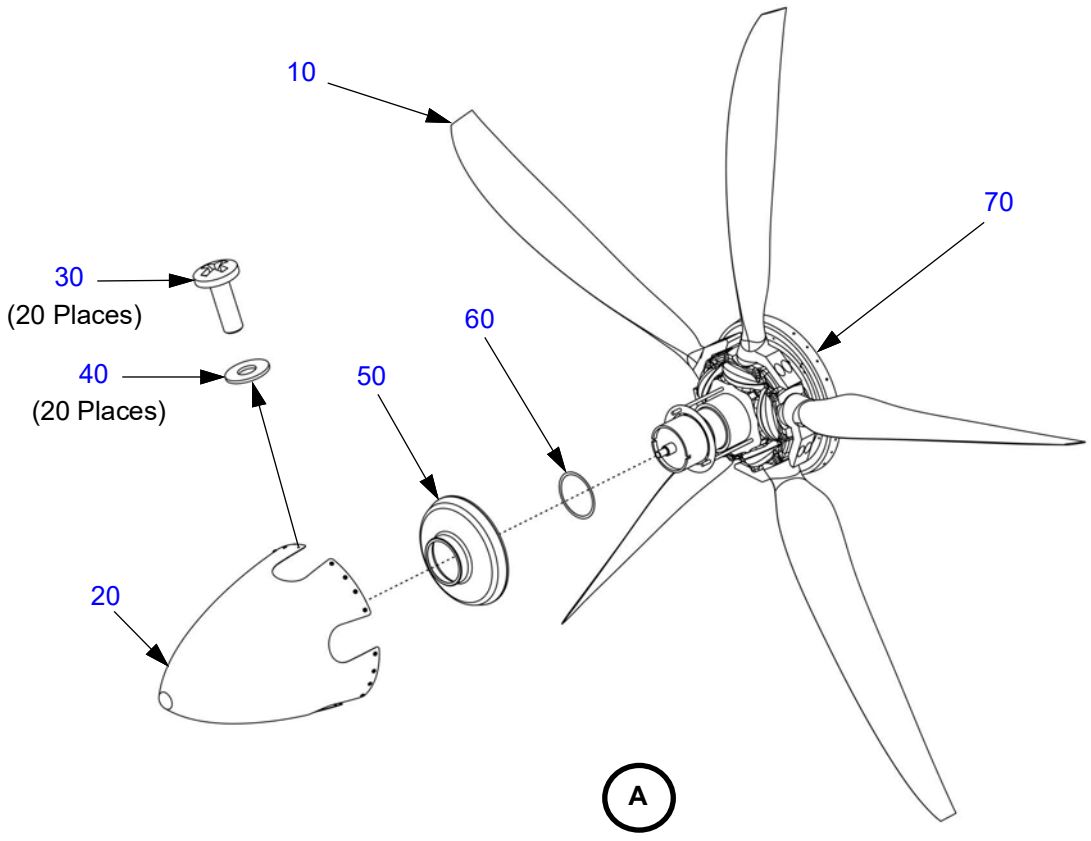

Figure 61-11.1: 5 Bladed Propeller Assembly (Continued)

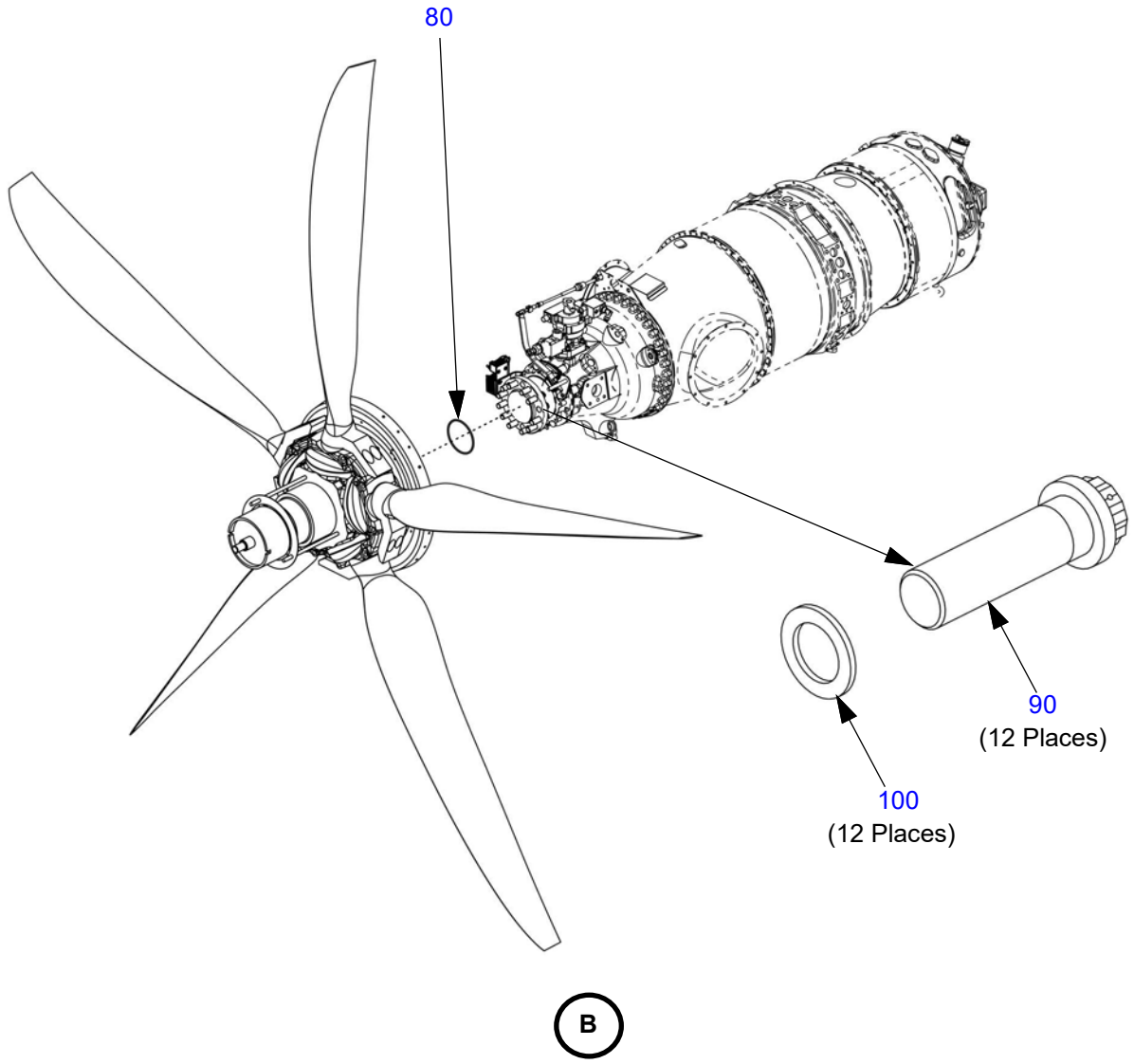

Table 61-11.1: 5 Bladed Propeller Assembly

Figure Item Number	Part Number	Part Name	Effectivity Code	Amount in Assy.
10	HC-E5A-3A/ NC10245B*6	Propeller Assembly	K011 and On*	1
20	105818P	Dome, 5-blade, Hartzell	K011 and On*	1
30	B3845-8	Screw, 10-32, Truss Head, (Dome Mounting), Hartzell	K011 and On*	20
40	A1020	Washer, Fiber, Hartzell	K011 and On*	20
50	105907	Filler Plate, Hartzell	K011 and On*	1
60	B-5486	Spacer, Hartzell	K011 and On*	A/R
70	105819P	Bulkhead Unit, Hartzell	K011 and On*	1
80	C-3317-239-2	O-ring, Propeller, Engine Interface, Hartzell	K011 and On*	1
90	B3347	Bolt, 12 Point, 9/16-18, Hartzell	K011 and On*	12
100	A2048-2	Washer, .570 x .063 Thk, Hartzell	K011 and On*	12

* (Also SN:K003-K010 with SB-0017)

This Page Intentionally Left Blank

CONTROLLING

Figure 61-20.1: Propeller Governor

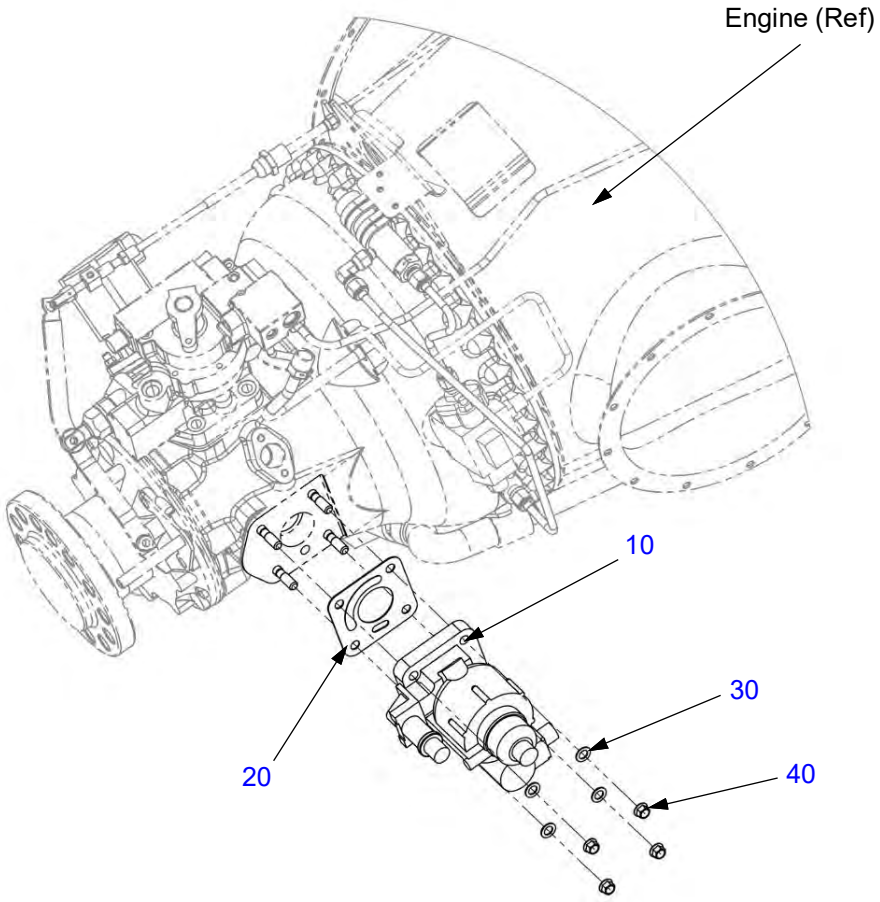

Table 61-20.1: Propeller Governor

Figure Item Number	Part Number	Part Name	Effectivity Code	Amount in Assy.
10	PK99007073 Vendor Number: 210961C or 210961-01	Overspeed Governor	K003 and On	1
20	3118953-01 (Pratt and Whitney P/N)	Gasket	K003 and On	1
30	AS9549-11	Washer, Flat, CRES, Ø .312	K003 and On	4
40	MS21042L5	Nut, Self-locking, 450°, Reduced 5/16-24	K003 and On	4

CHAPTER
71
Powerplant

This Page Intentionally Left Blank

Table of Contents
and
List of Effective Pages

Chapter/Section	Page Number	Effective Date
71-Title	Page 1	03 Apr 2020
71-Title	Page 2	03 Apr 2020
71-LOEP	Page 1	13 Jan 2023
71-LOEP	Page 2	13 Jan 2023
71-LOEP	Page 3	13 Jan 2023
71-LOEP	Page 4	03 Apr 2020
71-TOC	Page 1	14 Jul 2021
71-TOC	Page 2	03 Apr 2020
Cowling		
71-10	Page 1	14 Jul 2021
71-10	Page 2	03 Apr 2020
71-10	Page 3	14 Jul 2021
71-10	Page 4	03 Apr 2020
71-10	Page 5	03 Apr 2020
71-10	Page 6	03 Apr 2020
71-10	Page 7	03 Apr 2020
71-10	Page 8	03 Apr 2020
71-10	Page 9	03 Apr 2020
71-10	Page 10	03 Apr 2020
71-10	Page 11	14 Jul 2021
71-10	Page 12	14 Jul 2021
71-10	Page 13	14 Jul 2021
71-10	Page 14	14 Jul 2021
Mounts		
71-20	Page 1	03 Apr 2020
71-20	Page 2	03 Apr 2020
71-20	Page 3	03 Apr 2020
71-20	Page 4	03 Apr 2020
71-20	Page 5	03 Apr 2020
71-20	Page 6	03 Apr 2020
Fireseals and Shrouds		
71-30	Page 1	03 Apr 2020
71-30	Page 2	03 Apr 2020

71-30 ..... Page 3 ..... 03 Apr 2020
71-30 ..... Page 4 ..... 03 Apr 2020
71-30 ..... Page 5 ..... 03 Apr 2020
71-30 ..... Page 6 ..... 03 Apr 2020
71-30 ..... Page 7 ..... 03 Apr 2020
71-30 ..... Page 8 ..... 03 Apr 2020
71-30 ..... Page 9 ..... 03 Apr 2020
71-30 ..... Page 10 ..... 03 Apr 2020
71-30 ..... Page 11 ..... 03 Apr 2020
71-30 ..... Page 12 ..... 03 Apr 2020
71-30 ..... Page 13 ..... 03 Apr 2020
71-30 ..... Page 14 ..... 03 Apr 2020
71-30 ..... Page 15 ..... 03 Apr 2020
71-30 ..... Page 16 ..... 03 Apr 2020
71-30 ..... Page 17 ..... 03 Apr 2020
71-30 ..... Page 18 ..... 03 Apr 2020
71-30 ..... Page 19 ..... 03 Apr 2020
71-30 ..... Page 20 ..... 03 Apr 2020
71-30 ..... Page 21 ..... 03 Apr 2020
71-30 ..... Page 22 ..... 03 Apr 2020
71-30 ..... Page 23 ..... 03 Apr 2020
71-30 ..... Page 24 ..... 03 Apr 2020
71-30 ..... Page 25 ..... 03 Apr 2020
71-30 ..... Page 26 ..... 03 Apr 2020

Electrical Harness

71-50 ..... Page 1 ..... 03 Apr 2020
71-50 ..... Page 2 ..... 03 Apr 2020
71-50 ..... Page 3 ..... 03 Apr 2020
71-50 ..... Page 4 ..... 03 Apr 2020
71-50 ..... Page 5 ..... 03 Apr 2020
71-50 ..... Page 6 ..... 03 Apr 2020

Engine Air Intakes

71-60 ..... Page 1 ..... 03 Apr 2020
71-60 ..... Page 2 ..... 03 Apr 2020
71-60 ..... Page 3 ..... 13 Jan 2023
71-60 ..... Page 4 ..... 13 Jan 2023
71-60 ..... Page 5 ..... 03 Apr 2020
71-60 ..... Page 6 ..... 03 Apr 2020
71-60 ..... Page 7 ..... 03 Apr 2020
71-60 ..... Page 8 ..... 13 Jan 2023
71-60 ..... Page 9 ..... 03 Apr 2020
71-60 ..... Page 10 ..... 03 Apr 2020

71-60 ..... Page 11 ..... 13 Jan 2023
71-60 ..... Page 12 ..... 03 Apr 2020

Engine Drains
71-70 ..... Page 1 ..... 03 Apr 2020
71-70 ..... Page 2 ..... 03 Apr 2020
71-70 ..... Page 3 ..... 03 Apr 2020
71-70 ..... Page 4 ..... 03 Apr 2020
71-70 ..... Page 5 ..... 03 Apr 2020
71-70 ..... Page 6 ..... 03 Apr 2020
71-70 ..... Page 7 ..... 03 Apr 2020
71-70 ..... Page 8 ..... 03 Apr 2020
71-70 ..... Page 9 ..... 03 Apr 2020
71-70 ..... Page 10 ..... 03 Apr 2020

This Page Intentionally Left Blank

CHAPTER 71

Table of Contents

List of Effective Pages ..... 71-LOEP / Page 1
Table of Contents ..... 71-TOC / Page1

Paragraph **Page Number**

Cowling

Figure 71-10.1: Cowling Installation ..... 71-10 / Page 1
Table 71-10.1: Cowling Installation ..... 71-10 / Page 3
Figure 71-10.2: Top Cowl ..... 71-10 / Page 4
Table 71-10.2: Top Cowl ..... 71-10 / Page 5
Figure 71-10.3: Left Cowl ..... 71-10 / Page 6
Table 71-10.3: Left Cowl ..... 71-10 / Page 7
Figure 71-10.4: Right Cowl ..... 71-10 / Page 8
Table 71-10.4: Right Cowl ..... 71-10 / Page 9
Figure 71-10.5: E1000 Bottom Cowl ..... 71-10 / Page 10
Table 71-10.5: E1000 Bottom Cowl ..... 71-10 / Page 11
Figure 71-10.6: E1000 GX Bottom Cowl ..... 71-10 / Page 12
Table 71-10.6: E1000 GX Bottom Cowl ..... 71-10 / Page 13

Mounts

Figure 71-20.1: Engine Vibration Isolators ..... 71-20 / Page 1
Table 71-20.1: Engine Vibration Isolators ..... 71-20 / Page 2
Figure 71-20.2: Engine Mount ..... 71-20 / Page 3
Table 71-20.2: Engine Mount ..... 71-20 / Page 6

Fireseals and Shrouds

Figure 71-30.1: Forward Plenum Firewall ..... 71-30 / Page 1
Table 71-30.1: Forward Plenum Firewall ..... 71-30 / Page 9
Figure 71-30.2: Aft Plenum Firewall ..... 71-30 / Page 12
Table 71-30.2: Aft Plenum Firewall ..... 71-30 / Page 18
Figure 71-30.3: Firewall Plate ..... 71-30 / Page 19
Table 71-30.3: Firewall Plate ..... 71-30 / Page 21
Figure 71-30.4: Firewall Blanket Penetration Panels and Wraps ..... 71-30 / Page 22
Table 71-30.4: Firewall Blanket Penetration Panels and Wraps ..... 71-30 / Page 26

Electrical Harness

Figure 71-50.1: Terminal Block ..... 71-50 / Page 1
Table 71-50.1: Terminal Block ..... 71-50 / Page 2
Figure 71-50.2: Engine Ground Straps ..... 71-50 / Page 3
Table 71-50.2: Engine Ground Straps ..... 71-50 / Page 5

Engine Air Intakes

Figure 71-60.1: Inertial Separators and Plenum ..... 71-60 / Page 1
Table 71-60.1: Inertial Separators and Plenum ..... 71-60 / Page 8

Engine Drains

Figure 71-70.1: Engine Drains ..... 71-70 / Page 1
Table 71-70.1: Engine Drains ..... 71-70 / Page 6
Figure 71-70.2: Overboard Drain ..... 71-70 / Page 8
Table 71-70.2: Overboard Drain ..... 71-70 / Page 9

COWLING

Figure 71-10.1: Cowling Installation

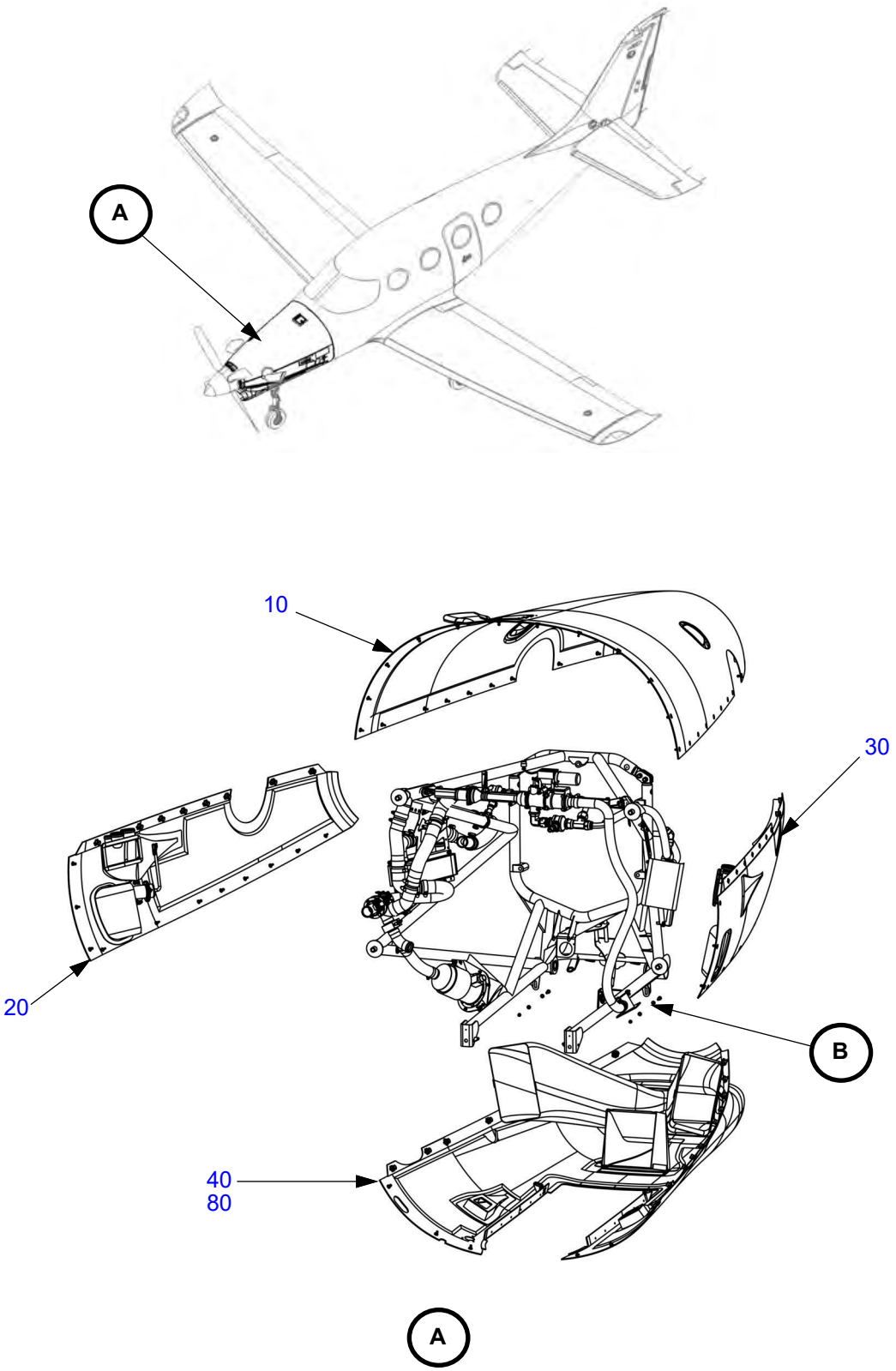

Figure 71-10.1: Cowling Installation (Continued)

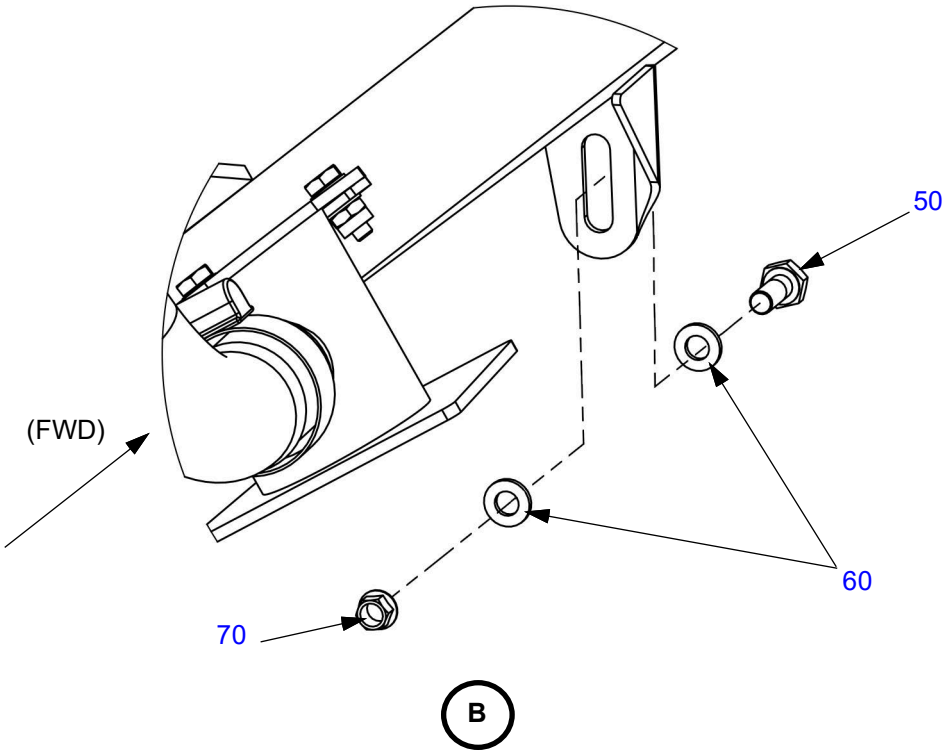

(Right side shown, left side opposite.)

Table 71-10.1: Cowling Installation

Figure Item Number	Part Number	Part Name	Effectivity Code	Amount in Assy.
10	AK71104000	Cowling, Upper, Assembly	K003 and On	1
20	AK71102000	Cowling, Left Side, Assembly	K003 and On	1
30	AK71101000	Cowling, Right Side, Assembly	K003 and On	1
40	AK71103000	Cowling, Lower, Assembly	K003 - K010	1
50	AN4-5A	Bolt, 1/4-28 x 21/32" Undrilled	K003 and On	2
60	NAS1149F0463P	Washer, Flat 1/4 x .063	K003 and On	4
70	MS21043-4	Nut, Self-locking, 800°, Reduced 1/4-28	K003 and On	2
80	AK71105000	Cowling, Lower, Assembly	K011 and On	1

Figure 71-10.2: Top Cowl

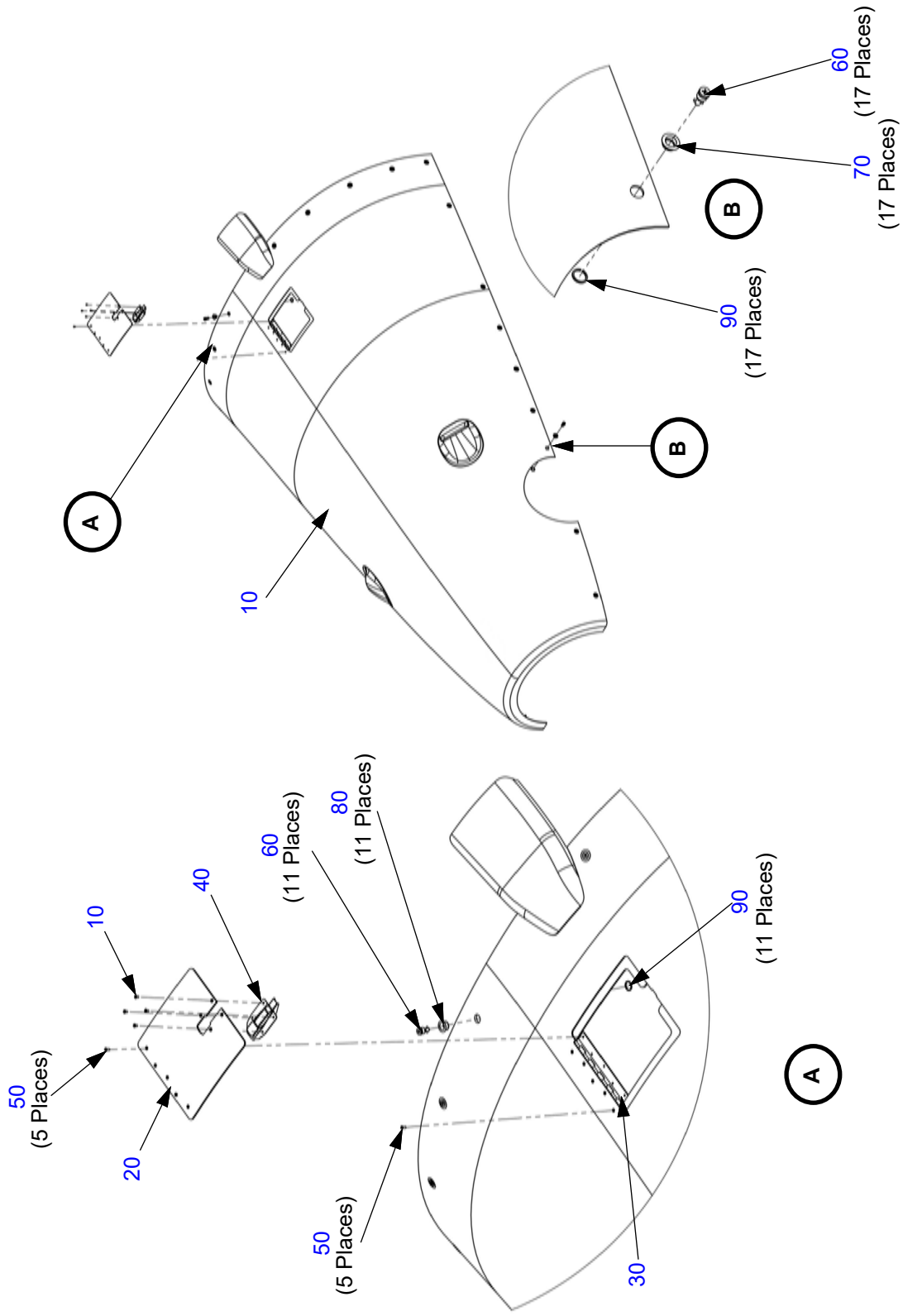

Table 71-10.2: Top Cowl

Figure Item Number	Part Number	Part Name	Effectivity Code	Amount in Assy.
10	AK71104100	Cowling, Bonded, Upper Assembly	K003 and On	1
20	PK71104001	Door, Turbine Oil, Cowling, Upper	K003 and On	1
30	AK71104200	Assy, Hinge, Door, Turbine Oil, Cowling, Upper	K003 and On	1
40	H-5000-2	Flush Latch, Hartwell	K003 and On	1
50	CCR264CS-3-03	Cherry Pull-thru Rivet, C'sunk, CRES Ø 3/32 x .255	K003 and On	10
60	MS40S5-3S (SK40S5-3S)*	Stud, Phillips Head, SS, 4000 Series	K003 and On	28
70	MS-OS (SK-OS)*	Grommet, SS, Low Profile, 4000 Series	K003 and On	17
80	MS-O316S (SK-0316S)*	Grommet, SS, Low Profile, 4000 Series	K003 and On	11
90	MSR4GS (SK-R4GS)*	Standard Retainer, SS	K003 and On	28

*Alternate part number.

Figure 71-10.3: Left Cowl

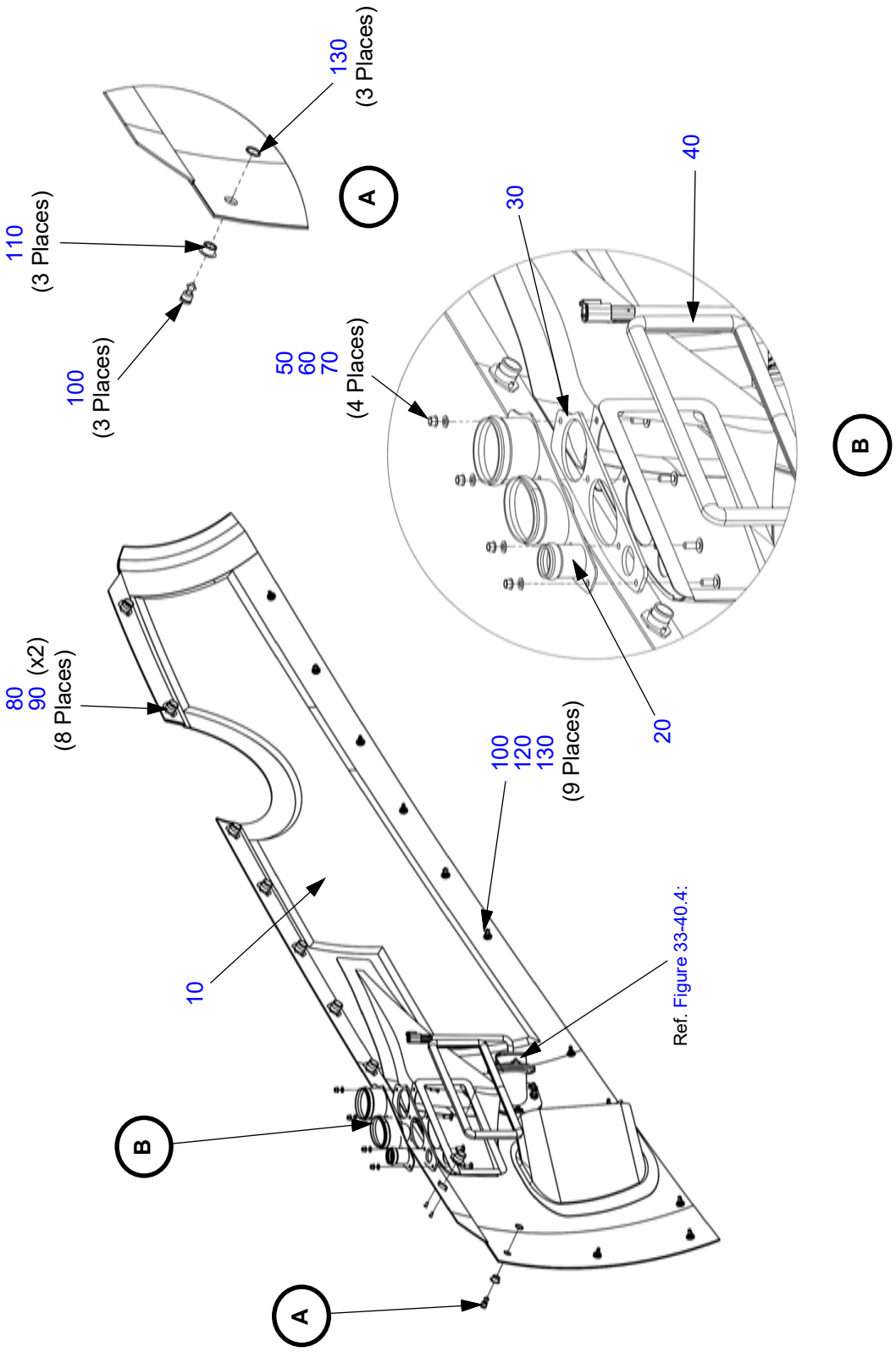

Table 71-10.3: Left Cowl

Figure Item Number	Part Number	Part Name	Effectivity Code	Amount in Assy.
10	AK71102100	Cowling, Left Side, Bonded Assembly	K003 and On	1
20	AK71004300	Weld Assy, Hose Barbs, Intercooler Plenum, LH	K003 and On	1
30	PK71004301	Seal, Hose Barbs, Intercooler Plenum, LH	K003 and On	1
40	PK71101104	Seal, NACA, Intercoolers	K003 and On	1
50	AN525-10R8	Screw, Washer Head, .190 x .500 Lg.	K003 and On	4
60	NAS620C10L	Washer, Reduced OD, CRES, .195 ID x .354 OD	K003 and On	4
70	MS21042L3	Nut, Self-locking, 450°, Reduced #10-32	K003 and On	4
80	MS245SS	Receptacle, Floating, SS, MS4000 Series	K003 and On	8
90	CCR264CS-4-03	Cherry Pull-thru Rivet, C'sunk, CRES Ø 1/8 x .285	K003 and On	16
100	MS40S5-3S (SK40S5-3S)*	Stud, Phillips Head, SS, 4000 Series	K003 and On	12
110	MS-O316S (SK-0316S)*	Grommet, SS, Low Profile, 4000 Series	K003 and On	3
120	MS-OS (SK-OS)*	Grommet, SS, Low Profile, 4000 Series	K003 and On	9
130	MSR4GS (SK-R4GS)*	Standard Retainer, SS	K003 and On	12

*Alternate part number.

Figure 71-10.4: Right Cowl

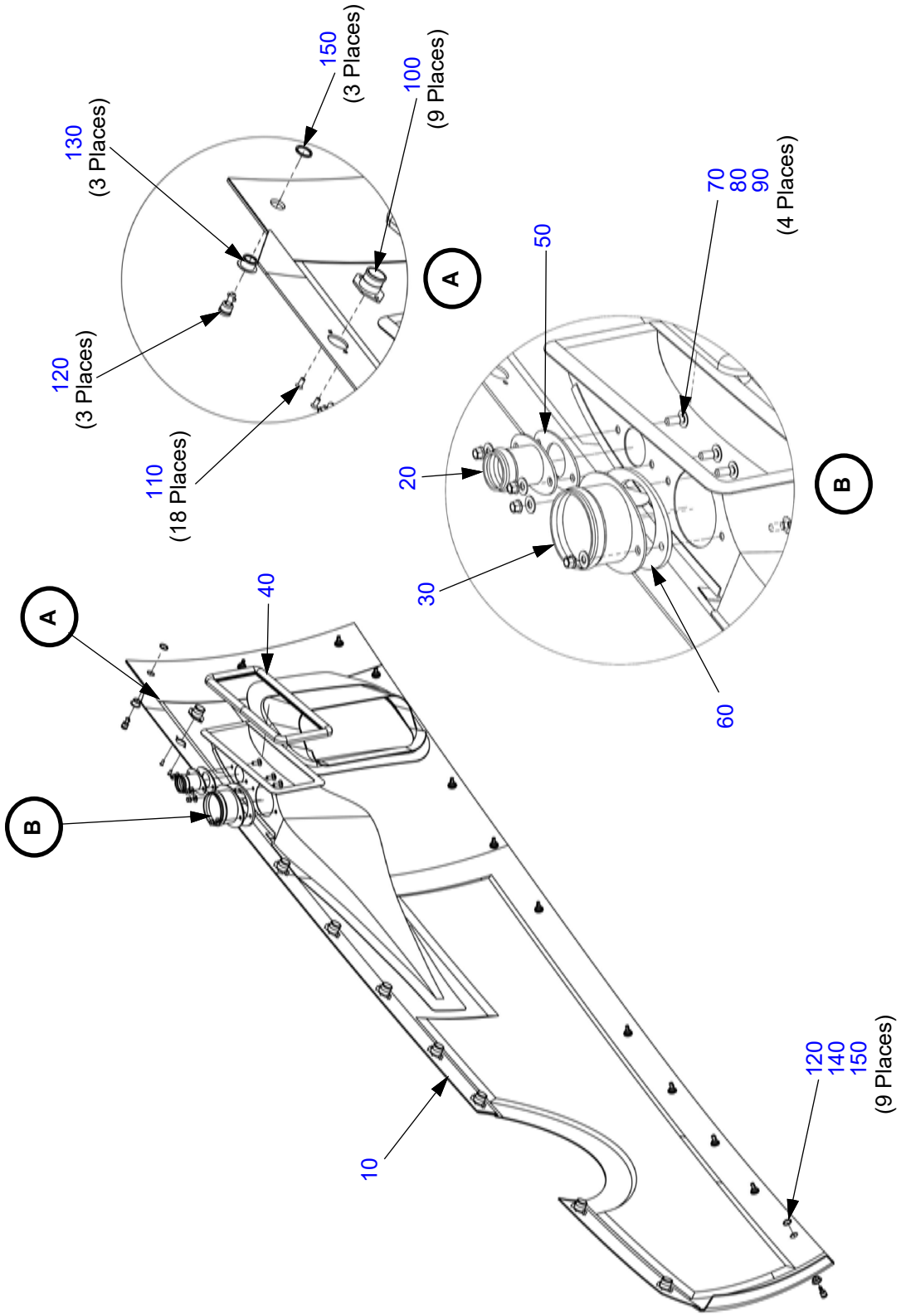

Table 71-10.4: Right Cowl

Figure Item Number	Part Number	Part Name	Effectivity Code	Amount in Assy.
10	AK71101100	Cowling, Right Side, Bonded Assembly	K003 and On	1
20	AK71004000	Weld Assy, Hose Barb, Intercooler Plenum, RH	K003 and On	1
30	AK71004100	Weld Assy, Diverted Hose Barb, Inter-cooler, RH	K003 and On	1
40	PK71101104	Seal, NACA, Intercoolers	K003 and On	1
50	PK71004003	Seal, Hose Barb, Intercooler Plenum, RH	K003 and On	1
60	PK71004103	Seal, Hose Barb, Intercooler Plenum, RH	K003 and On	1
70	AN525-10R8	Screw, Washer Head, .190 x .500 LG.	K003 and On	4
80	NAS1149F0332P	Washer, Flat #10 x .032	K003 and On	4
90	MS21042L3	Nut, Self-locking, 450°, Reduced #10-3	K003 and On	4
100	MS245SS	Receptacle, Floating, SS, MS4000 Series	K003 and On	9
110	CCR264CS-4-03	Cherry Pull-thru Rivet, C'sunk, CRES Ø 1/8 x .285	K003 and On	18
120	MS40S5-3S (SK40S5-3S)*	Stud, Phillips Head, SS, 4000 Seires	K003 and On	12
130	MS-O316S (SK-0316S)*	Grommet, SS, Low Profile, 4000 Series	K003 and On	3
140	MS-OS (SK-OS)*	Grommet, SS, Low Profile, 4000 Series	K003 and On	9
150	MSR4GS (SK-R4GS)*	Standard Retainer, SS	K003 and On	12

*Alternate part number.

Figure 71-10.5: E1000 Bottom Cowl

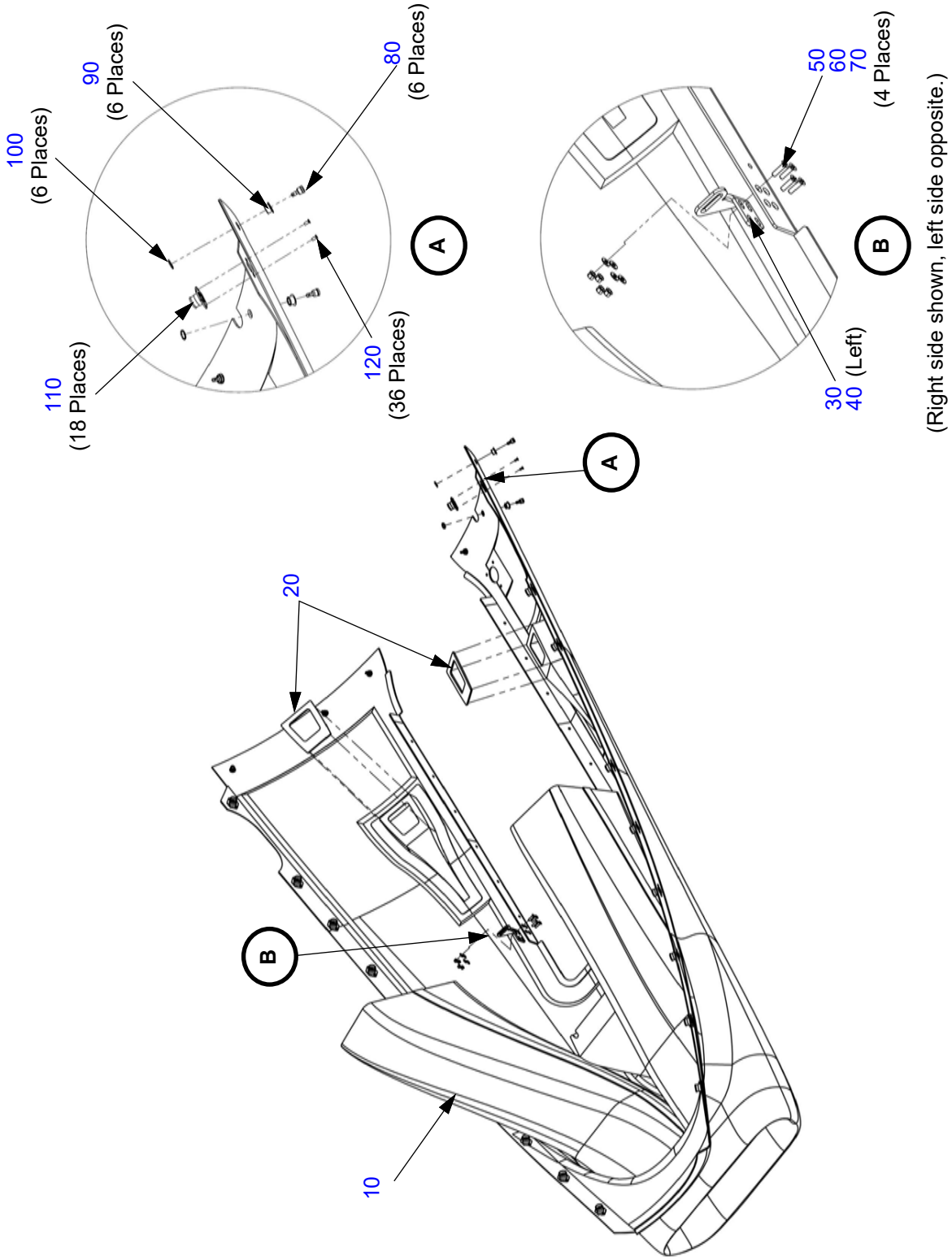

Table 71-10.5: E1000 Bottom Cowl

Figure Item Number	Part Number	Part Name	Effectivity Code	Amount in Assy.
10	AK71103100	Cowling, Bonded, Lower Assembly	K003 - K010	1
20	PK71103001	Seal, NACA, Ambient, Cowling, Lower	K003 - K010	2
30	PK71103002	Bracket, Mount, Right, Lower Cowl	K003 - K010	1
40	PK71103003	Bracket, Mount, Left, Lower Cowl	K003 - K010	1
50	MS24693-C51	Screw, Machine, C'sunk, CRES Ø .164 x 0.625	K003 - K010	8
60	NAS1149FN832P	Washer, Flat #8 x .032	K003 - K010	8
70	MS21043-08	Nut, Self-locking, 800°, Reduced #8-32	K003 - K010	8
80	MS40S5-3S (SK40S5-3S)*	Stud, Phillips Head, SS, 4000 Series	K003 - K010	6
90	MS-O316S (SK-0316S)*	Grommet, SS, Low Profile, 4000 Series	K003 - K010	6
100	MSR4GS (SK-R4GS)*	Standard Retainer, SS	K003 - K010	6
110	MS245SS (SK245C161C)*	Receptacle, Floating, Stainless Steel	K003 - K010	18
120	CCR264CS-4-03	Cherry Pull-thru Rivet, C'sunk, CRES Ø 1/8 x .285	K003 - K010	36

*Alternate part number.

Figure 71-10.6: E1000 GX Bottom Cowl

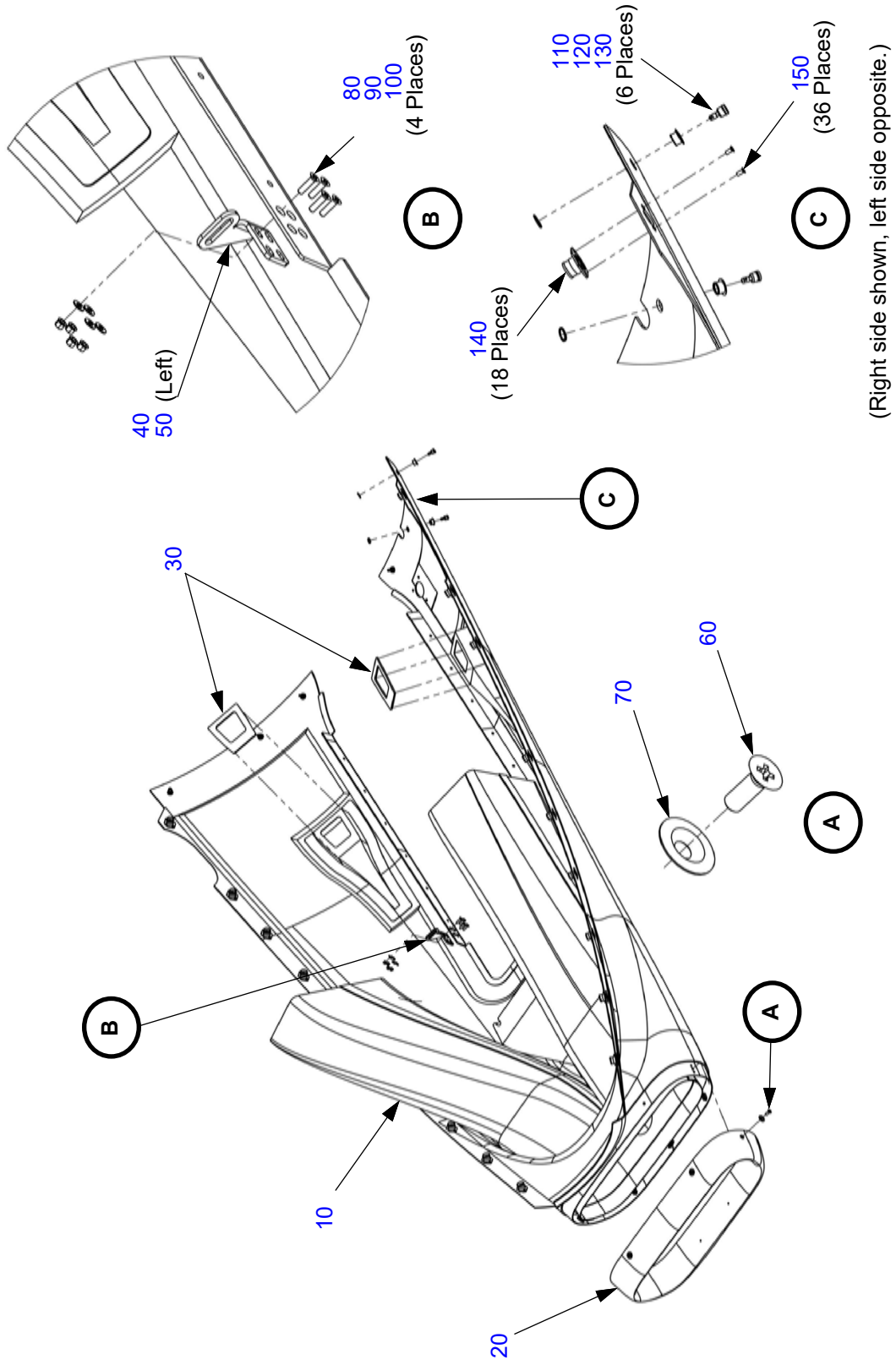

Table 71-10.6: E1000 GX Bottom Cowl

Figure Item Number	Part Number	Part Name	Effectivity Code	Amount in Assy.
10	AK71105100	Cowling, Bonded, Lower Assembly	K011 and On**	1
20	PK71600007	Lip, Cowling, Lower	K011 and On**	1
30	PK71103001	Seal, NACA, Ambient, Cowling, Lower	K011 and On**	2
40	PK71103002	Bracket, Mount, Right, Lower Cowl	K011 and On**	1
50	PK71103003	Bracket, Mount, Left, Lower Cowl	K011 and On**	1
60	MS24694-C50	Screw, Machine, C'sunk, Cres Ø .190 x 17/32	K011 and On**	7
70	NAS1169C10L	Washer, Dimpled, Cres No. 10 x .016	K011 and On**	7
80	MS24693-C51	Screw, Machine, C'sunk, CRES Ø .164 x 0.625	K011 and On**	8
90	NAS1149FN832P	Washer, Flat #8 x .032	K011 and On**	8
100	MS21043-08	Nut, Self-locking, 800°, Reduced #8-32	K011 and On**	8
110	MS40S5-3S (SK40S5-3S)*	Stud, Phillips Head, SS, 4000 Series	K011 and On**	6
120	MS-O316S (SK-0316S)*	Grommet, SS, Low Profile, 4000 Series	K011 and On**	6
130	MSR4GS (SK-R4GS)*	Standard Retainer, SS	K011 and On**	6
140	MS245SS (SK245C161C)*	Receptacle, Floating, Stainless Steel	K011 and On**	18
150	CCR264CS-4-03	Cherry Pull-thru Rivet, C'sunk, CRES Ø 1/8 x .285	K011 and On**	36

*Alternate part number.
**Also SN:K003-K010 with SB-0017

This Page Intentionally Left Blank

MOUNTS

Figure 71-20.1: Engine Vibration Isolators

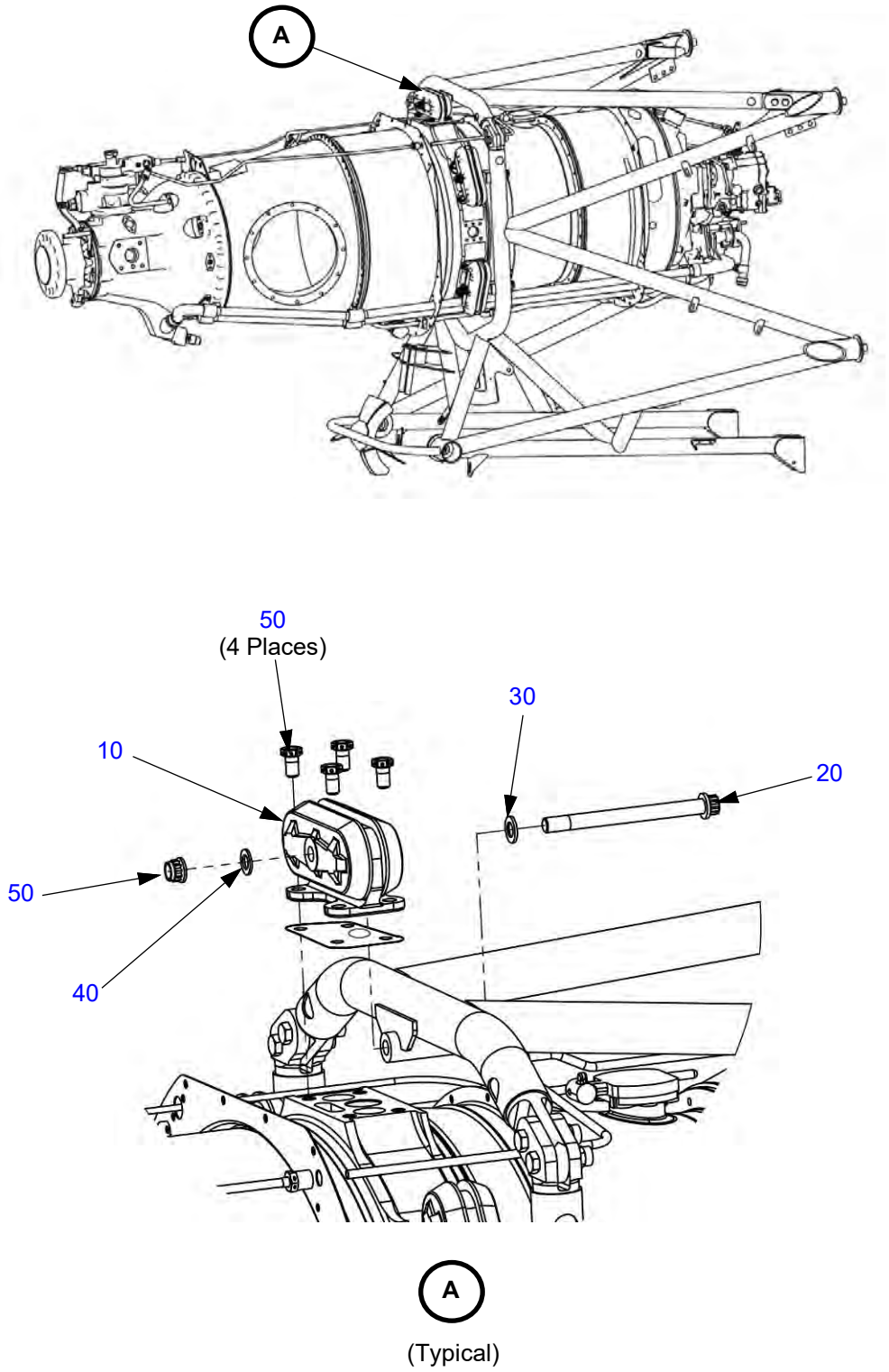

Table 71-20.1: Engine Vibration Isolators

Figure Item Number	Part Number	Part Name	Effectivity Code	Amount in Assy.
10	93880-19	Barry Controls: Isolator, PPU	K003 and On	5
20	MS21250-07068	Bolt, Tension, 12 Point Ø .438-20 x 4.991	K003 and On	5
30	MS20002C7	Washer, Countersunk, High Strength, 7/16" ID	K003 and On	5
40	AN960-716 NAS1149F0763 (Alternate)	Washer, Flat, 5/16 x .062 Thk	K003 and On	5
50	NAS1804-7N	Nut, Self-locking, 12 Point Ø .438-20	K003 and On	5
60	NAS6206-03H	Bolt, 3/8-24 x .642, Drilled Head	K003 and On	20

Figure 71-20.2: Engine Mount

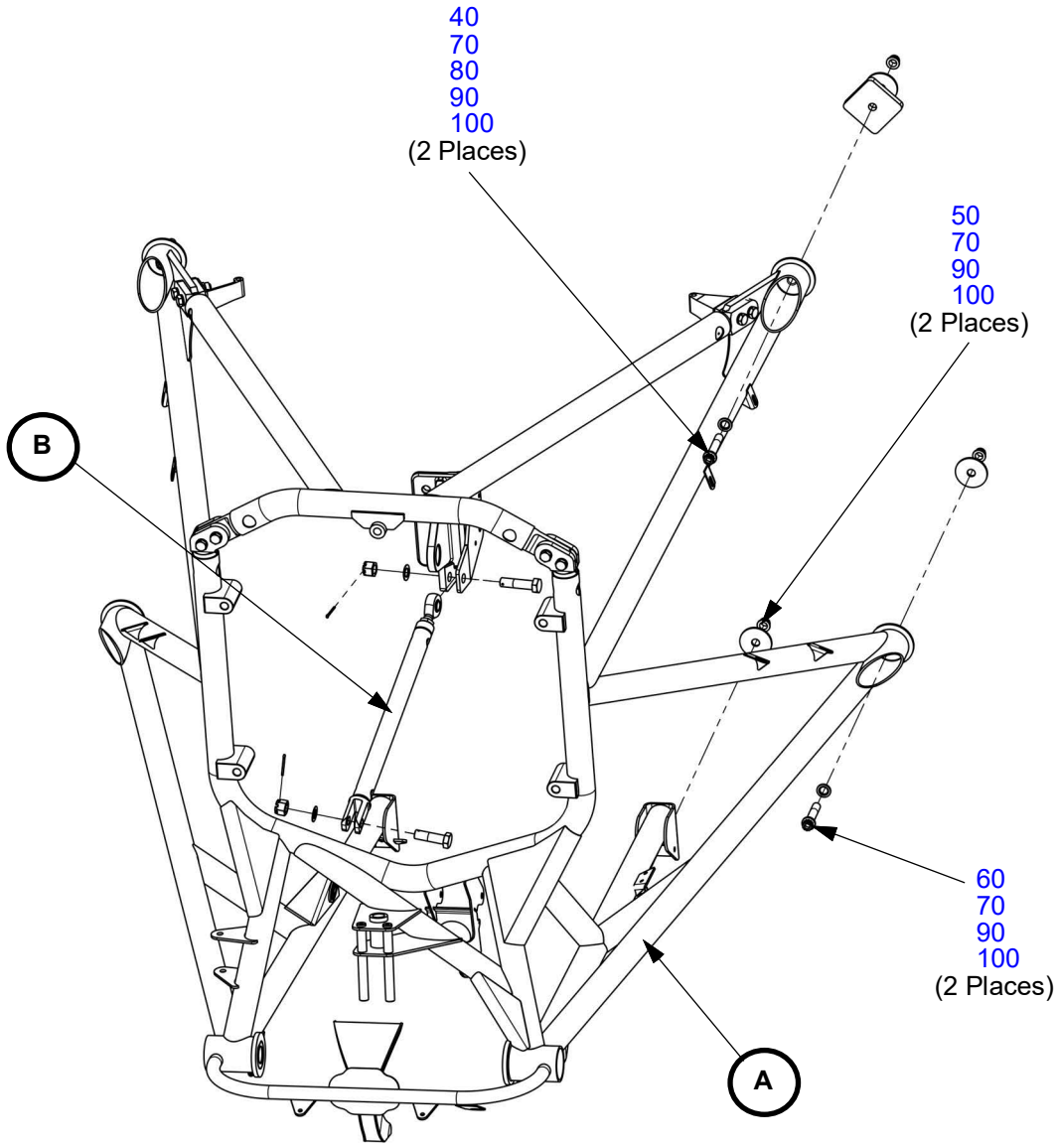

Figure 71-20.2: Engine Mount (Continued)

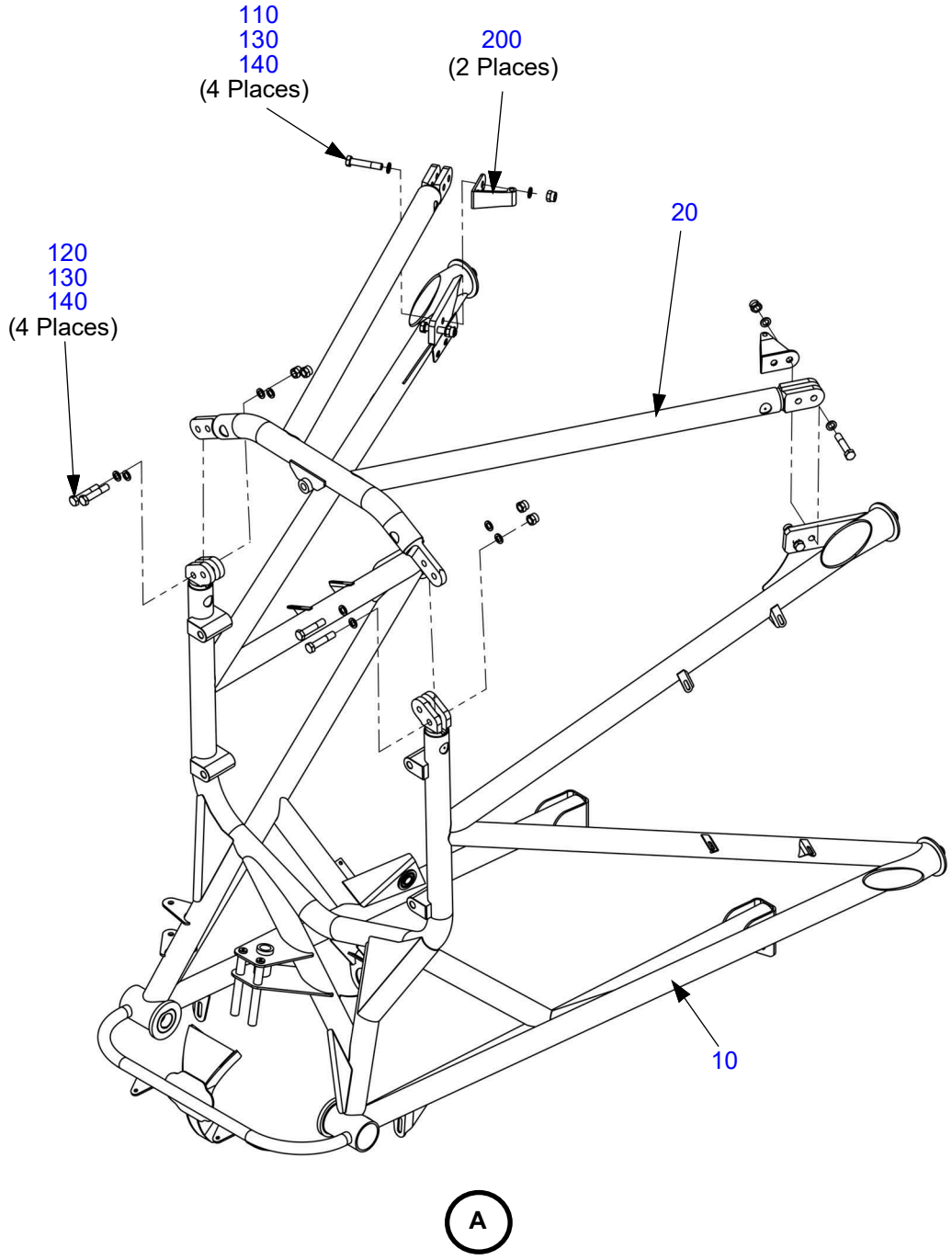

Figure 71-20.2: Engine Mount (Continued)

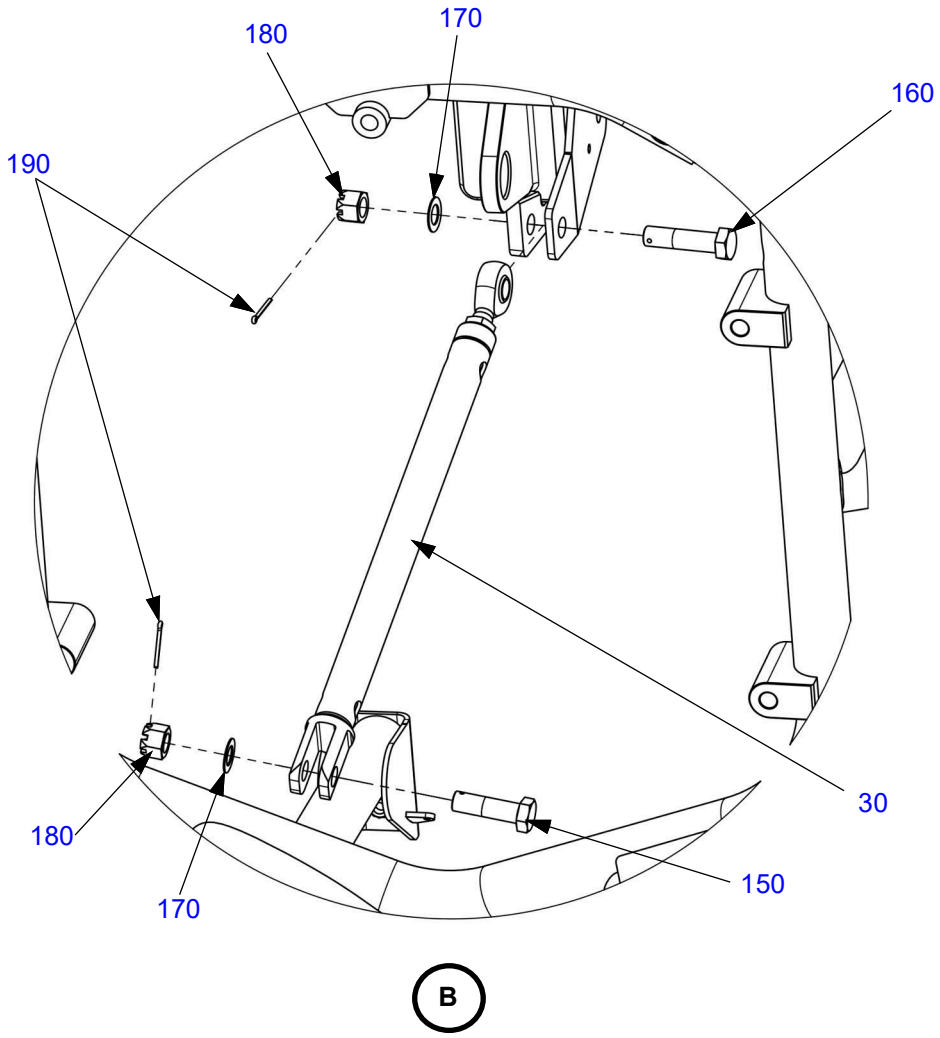

Table 71-20.2: Engine Mount

Figure Item Number	Part Number	Part Name	Effectivity Code	Amount in Assy.
10	AK71201000	Upper Engine Mount Assembly	K003 and On	1
20	AK71202000	Lower Engine Mount	K003 and On	1
30	AK71203000	NLG Support Strut, Engine Mount	K003 and On	1
40	MS21250-07018	Bolt, Tension, 12 Point Ø .438-20 x 1.866	K003 and On	2
50	MS21250-07022	Bolt, Tension, 12 Point Ø .438-20 x 2.116	K003 and On	2
60	MS21250-07028	Bolt, Tension, 12 Point Ø .438-20 x 2.491	K003 and On	2
70	MS20002C7	Washer, Countersunk, High Strength, 7/16" ID	K003 and On	6
80	PK71200002	Plate Reinforcement, Engine Mount	K003 and On	2
90	AN970-7	Washer, Flat 7/16 x .109	K003 and On	6
100	NAS1804-7N	Nut, Self-locking, 12 Point Ø .438-20	K003 and On	6
110	AN6-16A	Bolt, 3/8-24 x 1-53/64" Undrilled	K003 and On	4
120	AN6-17A	Bolt, 3/8-24 x 1-61/64" Undrilled	K003 and On	4
130	NAS1149F0663P	Washer, Flat, 3/8 Dia x .063 Thk.	K003 and On	16
140	MS21045L6	Nut, Self-locking, Steel 3/8-24	K003 and On	8
150	AN8-15	Bolt, 1/2-20 x 1-23/32" Drilled Shank	K003 and On	1
160	AN8-17	Bolt, 1/2-20 x 1-31/32" Drilled Shank	K003 and On	1
170	NAS1149F0832P	Washer, Flat 1/2 x .032	K003 and On	2
180	AN310-8	Nut, Castellated, Steel 1/2-20	K003 and On	2
190	MS24665-285	Pin, Cotter, Cad Steel Ø .094 x 1.00	K003 and On	2
200	PK71400301	Bracket, Equipment, Engine Mount	K003 and On	2

FIRESEALS AND SHROUDS

Figure 71-30.1: Forward Plenum Firewall

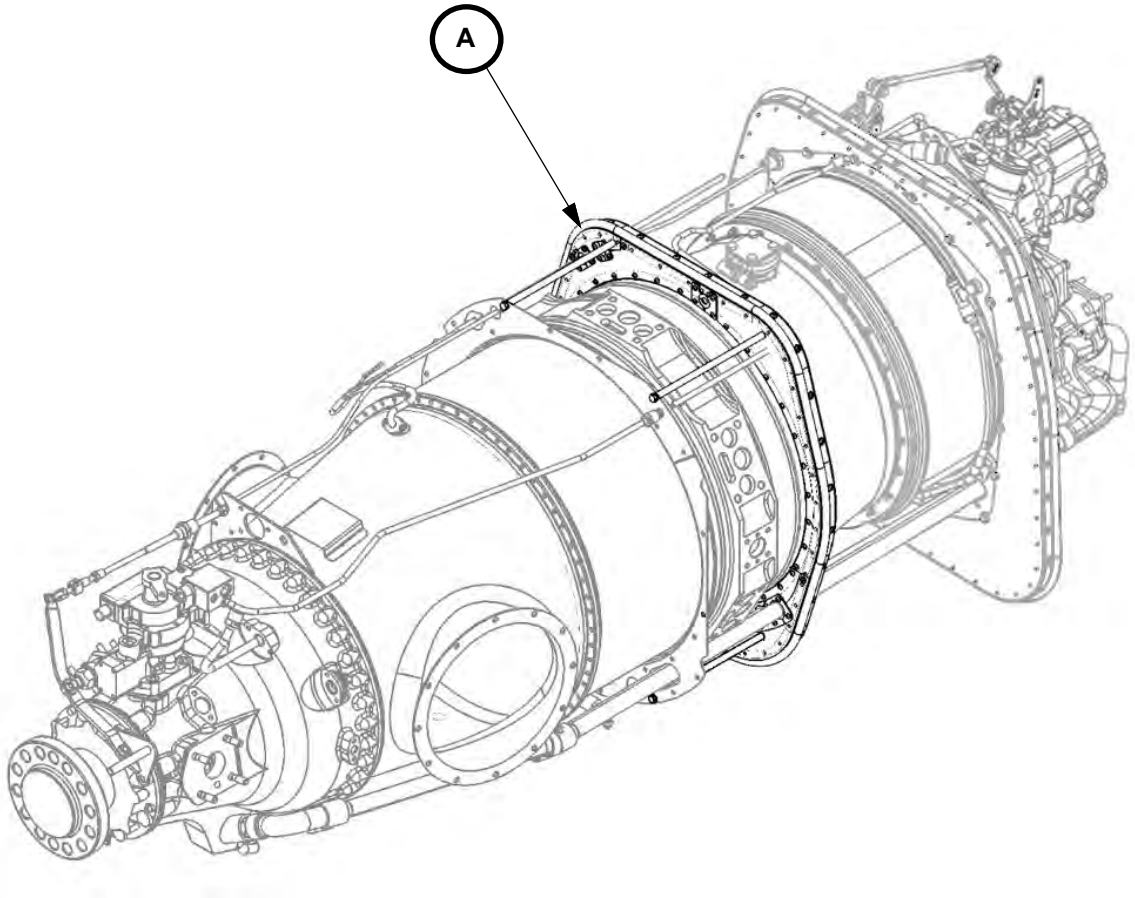

Figure 71-30.1: Forward Plenum Firewall (Continued)

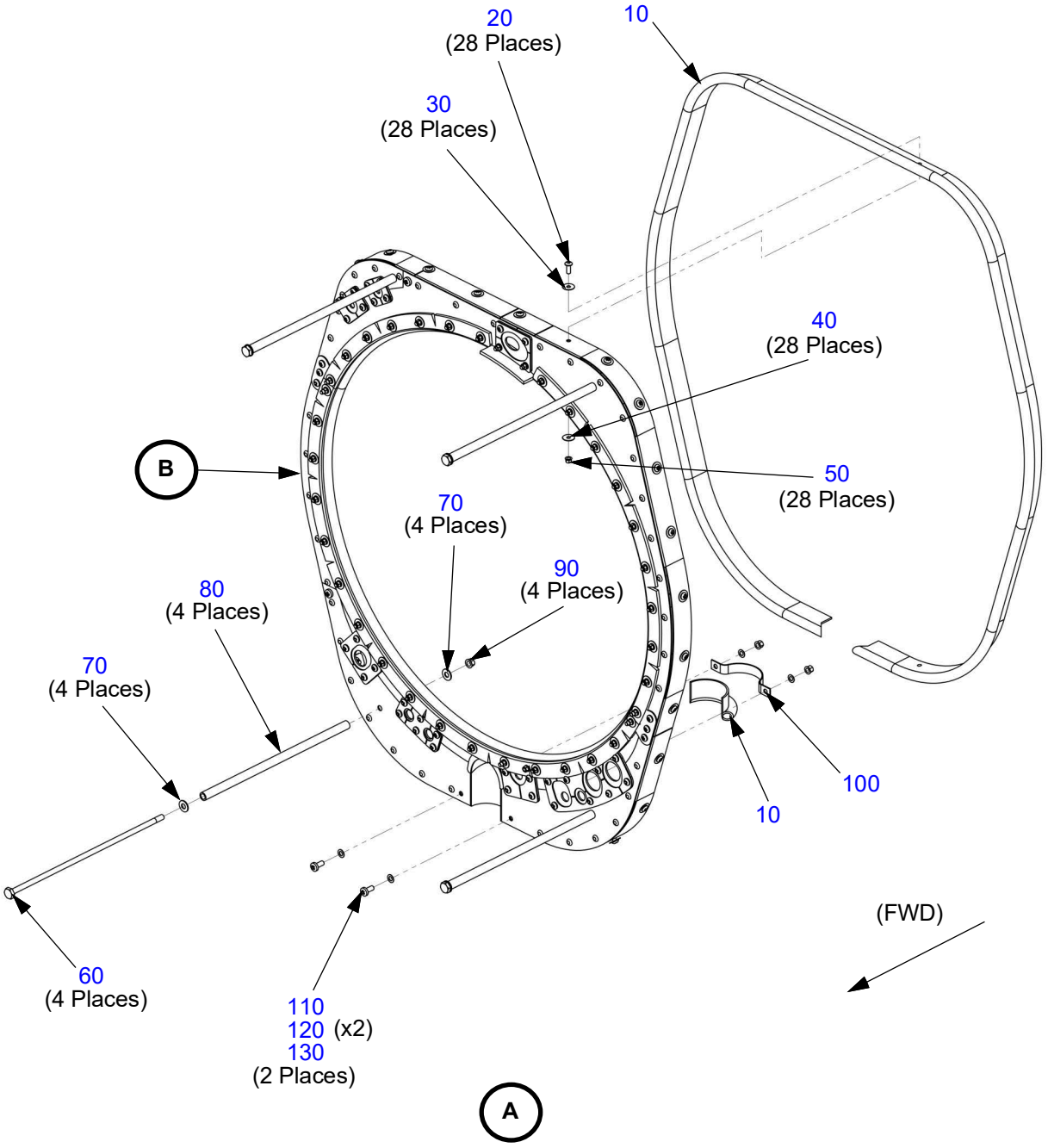

Figure 71-30.1: Forward Plenum Firewall (Continued)

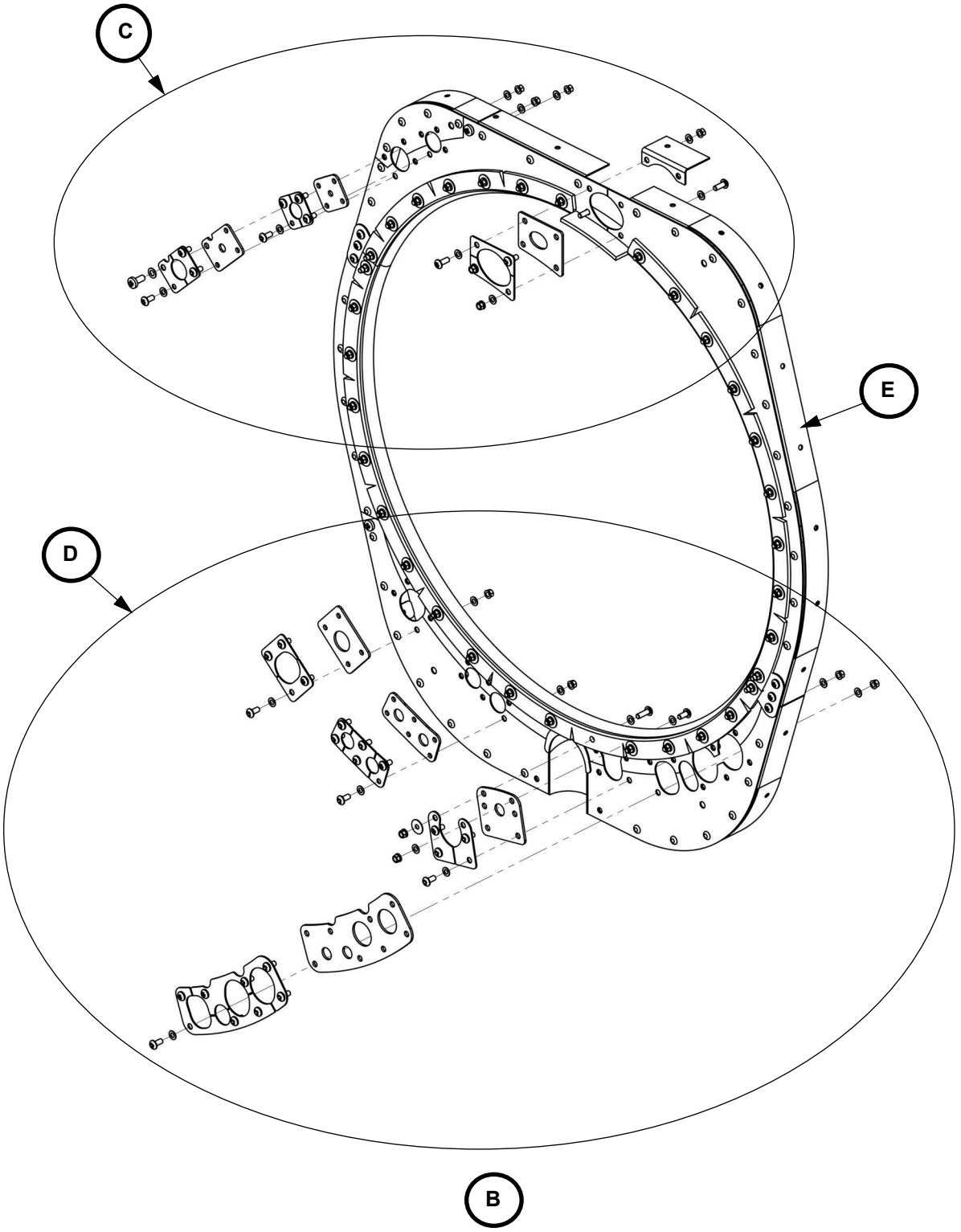

Figure 71-30.1: Forward Plenum Firewall (Continued)

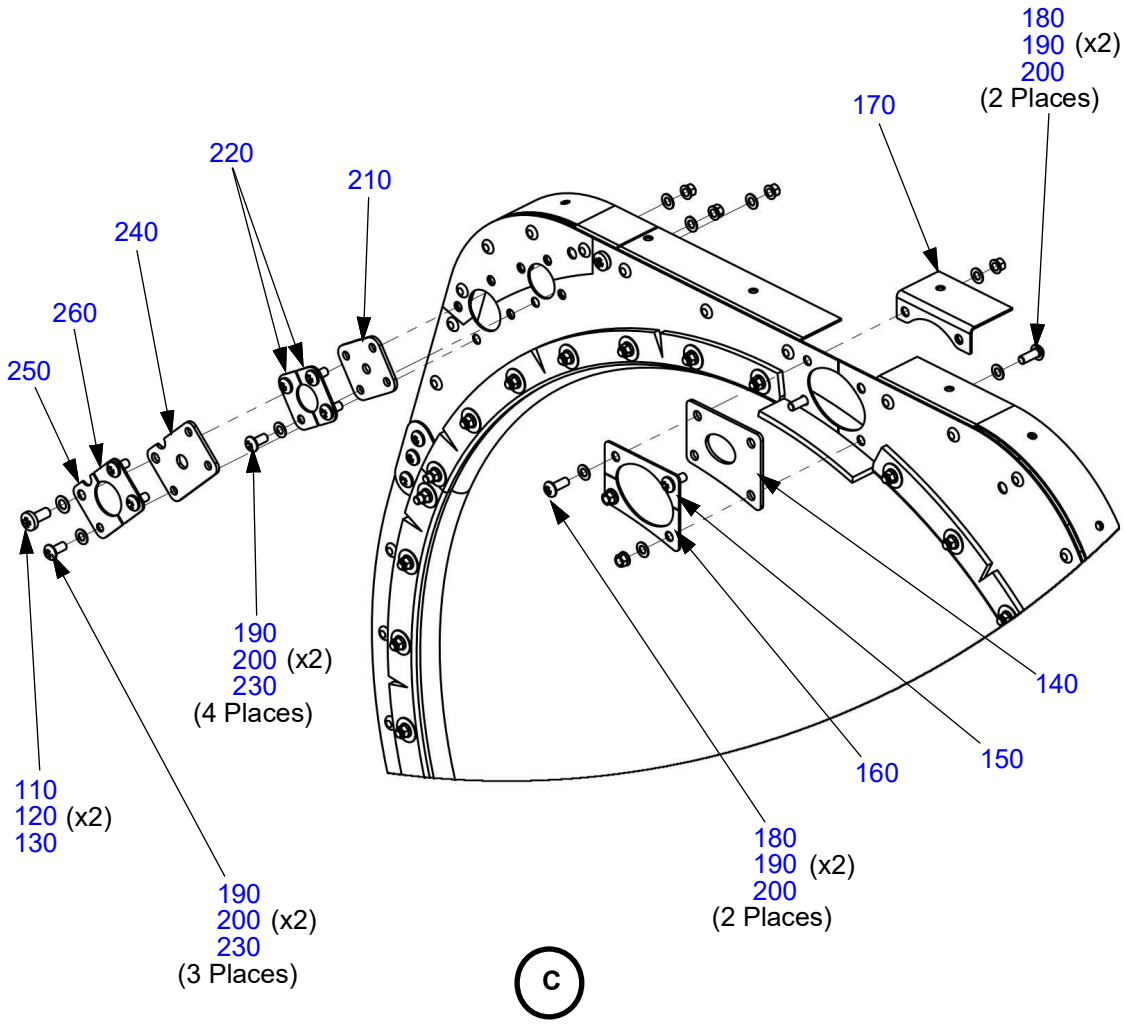

Figure 71-30.1: Forward Plenum Firewall (Continued)

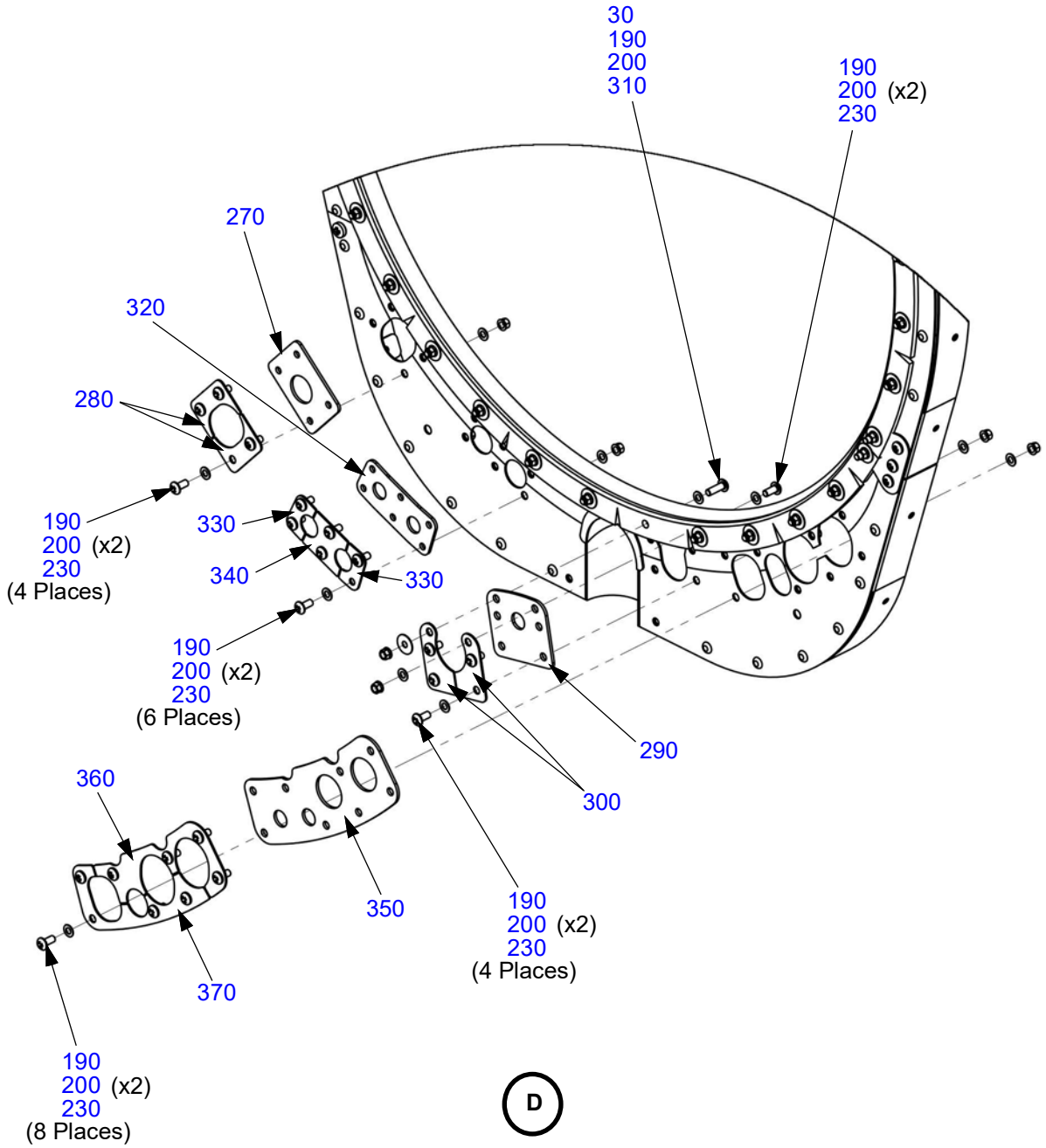

Figure 71-30.1: Forward Plenum Firewall (Continued)

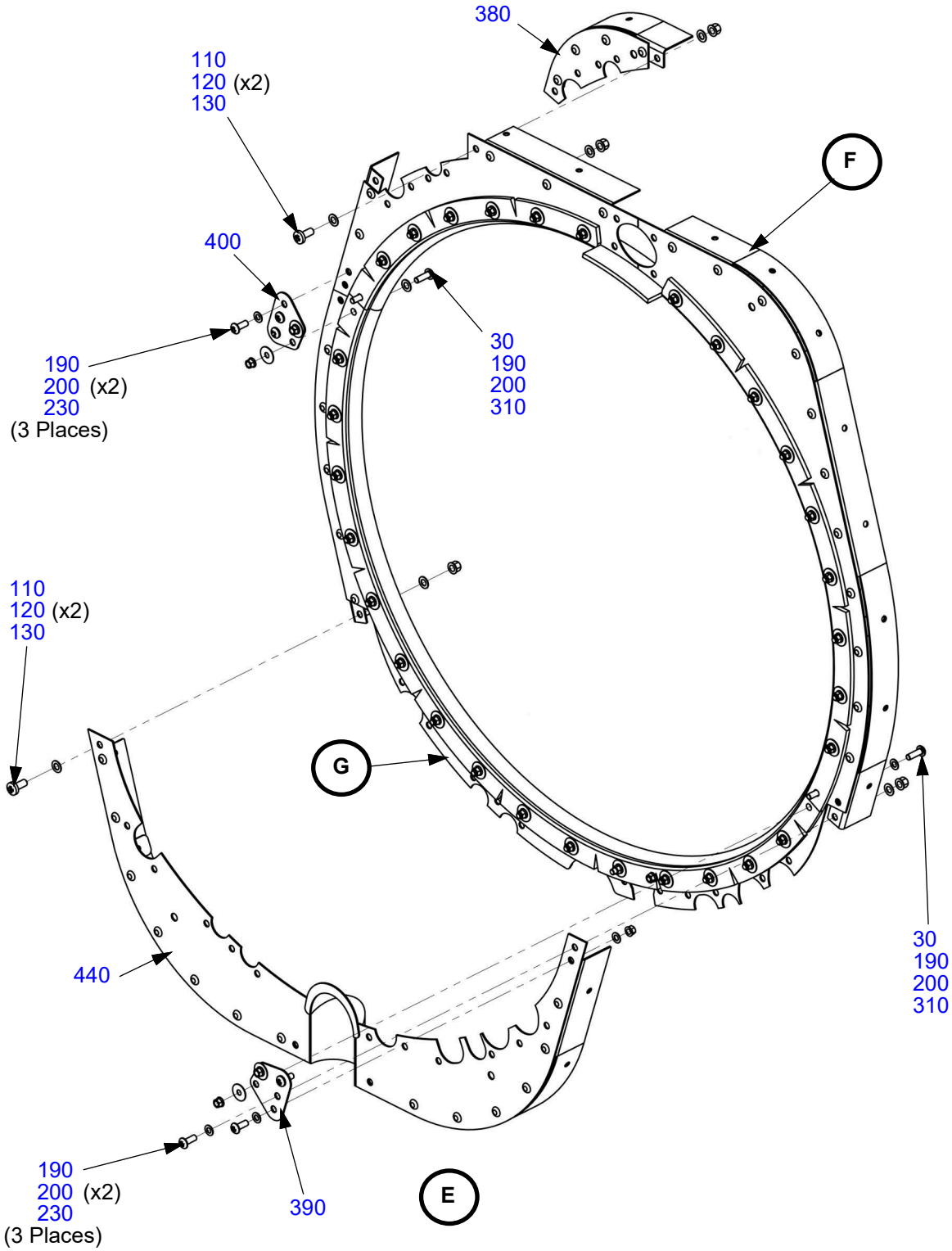

Figure 71-30.1: Forward Plenum Firewall (Continued)

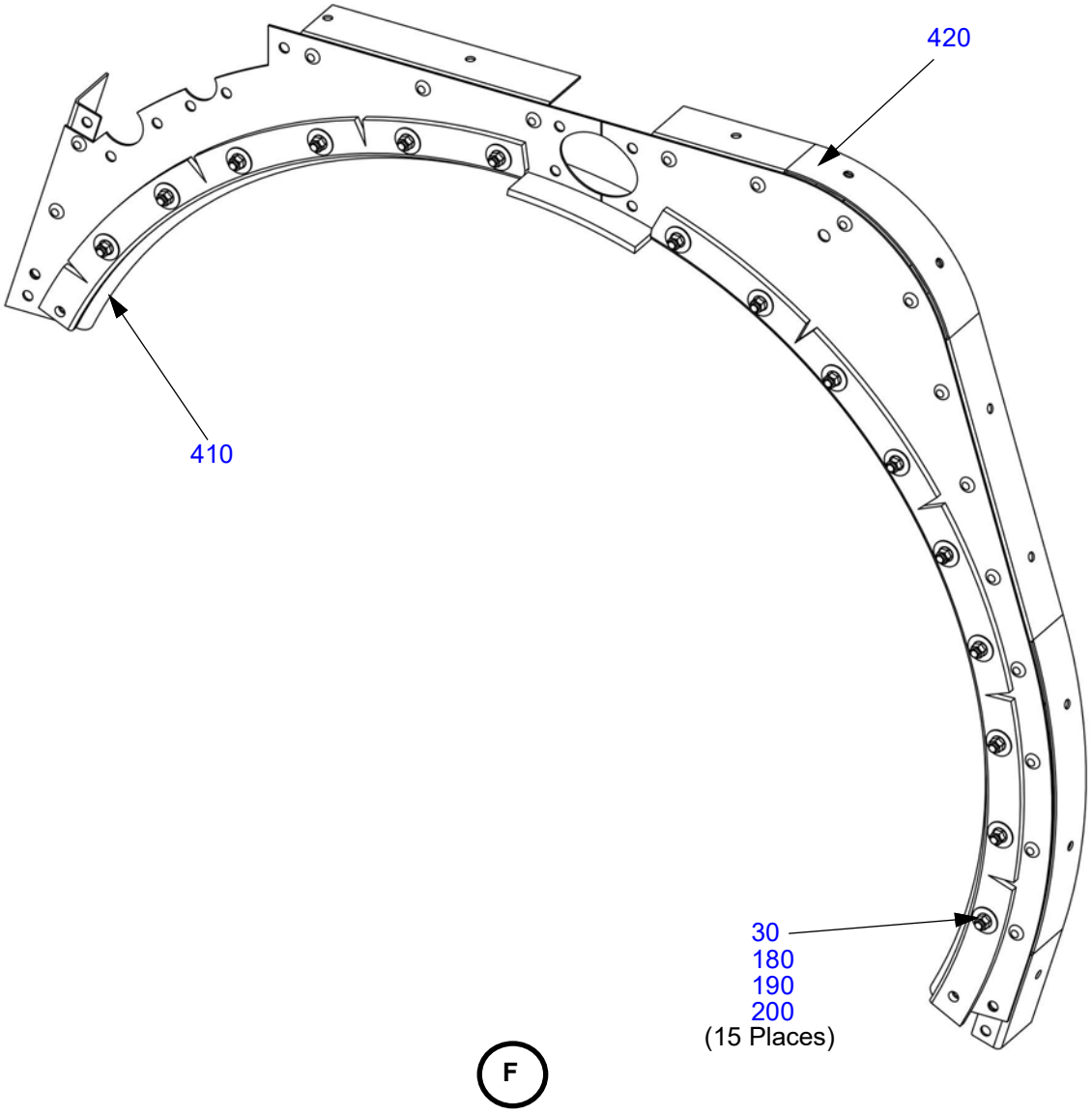

Figure 71-30.1: Forward Plenum Firewall (Continued)

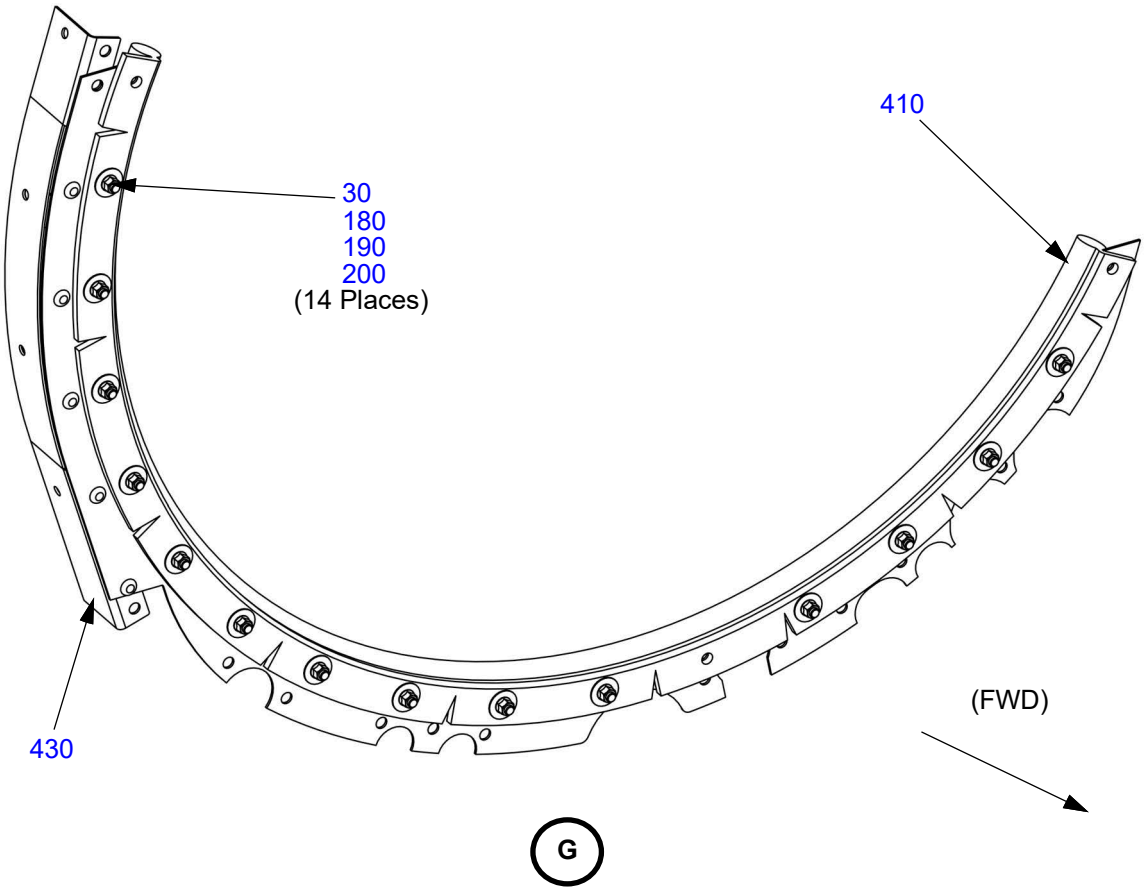

Table 71-30.1: Forward Plenum Firewall

Figure Item Number	Part Number	Part Name	Effectivity Code	Amount in Assy.
10	PK99005044	Seal, Tadpole Tape, Fireseal Plenum	K003 and On	A/R
20	MS51957-28	Screw, Pan Head, .138 x .375 Lg., CRES	K003 and On	28
30	NAS1149FN532P	Washer, Flat #5 x .032	K003 and On	45
40	NAS1149FN616P	Washer, Flat #6 x .016	K003 and On	28
50	MS21042L06	Nut, Self-locking, 450°, Reduced #6-32	K003 and On	28
60	AN3-76A	Bolt, 10-32 x 7-25/32" Undrilled	K003 and On	4
70	NAS1149F0332P	Washer, Flat #10 x .032	K003 and On	8
80	PK71304016	Standoff, Fwd Plenum Firewall	K003 and On	4
90	MS21042L3	Nut, Self-locking, 450°, Reduced #10-32	K003 and On	4
100	PK71304001	Strap, Drain Pocket, Forward Plenum FW	K003 and On	1
110	MS27039C0806	Screw, Pan Head, .164 x .406 Lg., CRES	K003 and On	5
120	NAS620C8	Washer, Reduced OD, CRES, .169 ID x .304 OD	K003 and On	10
130	MS21042L08	Nut, Self-locking, 450°, Reduced #8-32	K003 and On	5
140	PK71304018	Gasket, PY Pass Through	K003 and On	1
150	PK71304019	Plate, Upper, PY Pass Through	K003 and On	1
160	PK71304020	Plate, Lower, PY Pass Through	K003 and On	1
170	PK71304202	Flange, PY Pass Through, Forward Plenum FW	K003 and On	1
180	MS51957-28	Screw, Pan Head, .138 x .375 Lg., CRES	K003 and On	19
190	NAS620C6	Washer, Reduced OD, CRES, .143 ID x .267 OD	K003 and On	50
200	MS21042L06	Nut, Self-locking, 450°, Reduced #6-32	K003 and On	47
210	PK71304002	Gasket, Upper, Fwd Plenum Firewall	K003 and On	1
220	PK71304013	Plate, Small, Fwd Plenum Firewall	K003 and On	2
230	MS51957-27	Screw, Pan Head, .138 x .312 Lg., CRES	K003 and On	26

Figure Item Number	Part Number	Part Name	Effectivity Code	Amount in Assy.
240	PK71304003	Gasket, Co Pilot Upper, Fwd Plenum Firewall	K003 and On	1
250	PK71304008	Plate, Co Pilot Upper, Right, Fwd Plenum Firewall	K003 and On	1
260	PK71304009	Plate, Co Pilot Upper, Left, Fwd Plenum Firewall	K003 and On	1
270	PK71304005	Gasket, Co Pilot Lower, Right, Fwd Plenum FW	K003 and On	1
280	PK71304014	Plate, Right, Lower, Fwd Plenum Firewall	K003 and On	2
290	PK71304006	Gasket, Pilot Lower, Right, Fwd Plenum Firewall	K003 and On	1
300	PK71304012	Plate, Pilot Lower, Right, Fwd Plenum Firewall	K003 and On	2
310	MS51957-29	Screw, Pan Head, .138 x .438 Lg., CRES	K003 and On	2
320	PK71304004	Gasket, Co Pilot Lower, Left, Fwd Plenum FW	K003 and On	1
330	PK71304013	Plate, Small, Fwd Plenum Firewall	K003 and On	2
340	PK71304015	Plate, Co Pilot Lower, Mid, Fwd Plenum Firewall	K003 and On	1
350	PK71304007	Gasket, Pilot Lower, Left, Fwd Plenum Firewall	K003 and On	1
360	PK71304010	Plate, Pilot Lower, Left Top, Fwd Plenum Firewall	K003 and On	1
370	PK71304011	Plate, Pilot Lower, Left Bottom, Fwd Plenum FW	K003 and On	1
380	AK71304300	Corner, Co Pilot, Forward Plenum FW Assy	K003 and On	1
390	PK71305105	Strap, Left, Forward Plenum FW	K003 and On	1
400	PK71305106	Strap, Right, Forward Plenum FW	K003 and On	1
410	PK99005045	Seal, Tadpole Tape, Flange Mount	K003 and On	A/R

Figure Item Number	Part Number	Part Name	Effectivity Code	Amount in Assy.
420	AK71304100	Upper Forward Plenum FW Assy (Assembly includes required amounts of items 30,180, 190, 200, and 410.)	K003 and On	1
430	AK71304400	Mid, Forward Plenum FW Assy (Assembly includes required quantities of items 30,180, 190, 200, and 410.)	K003 and On	1
440	AK71304500	Lower, Forward Plenum FW, Assy	K003 and On	1

Figure 71-30.2: Aft Plenum Firewall

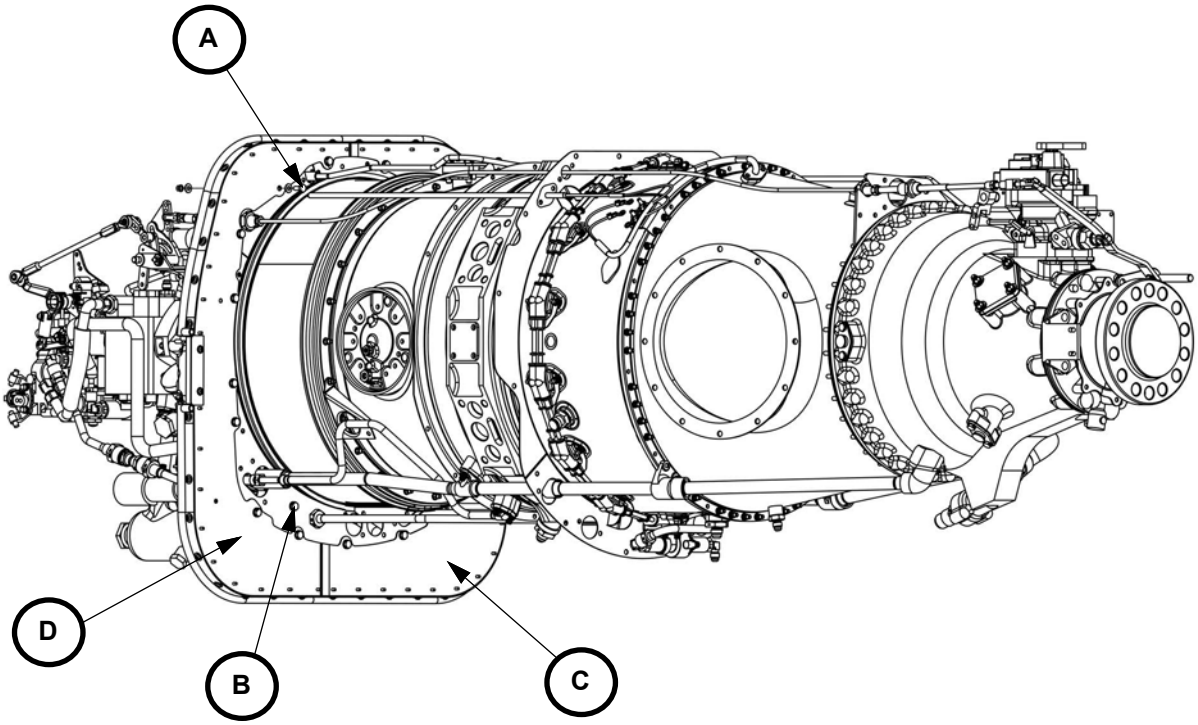

Figure 71-30.2: Aft Plenum Firewall (Continued)

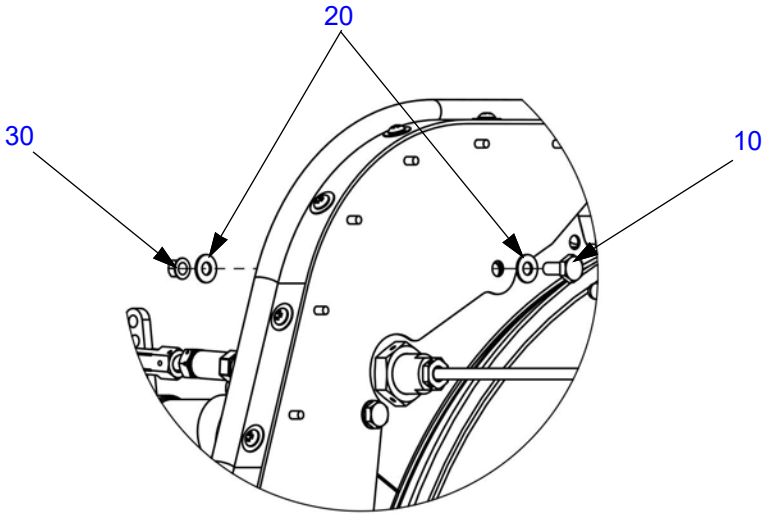

(Typical, 17 places)

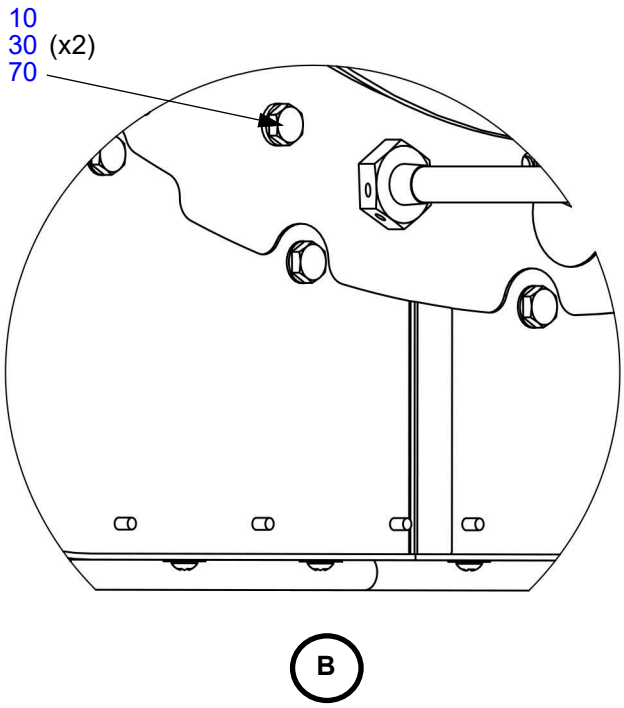

Figure 71-30.2: Aft Plenum Firewall (Continued)

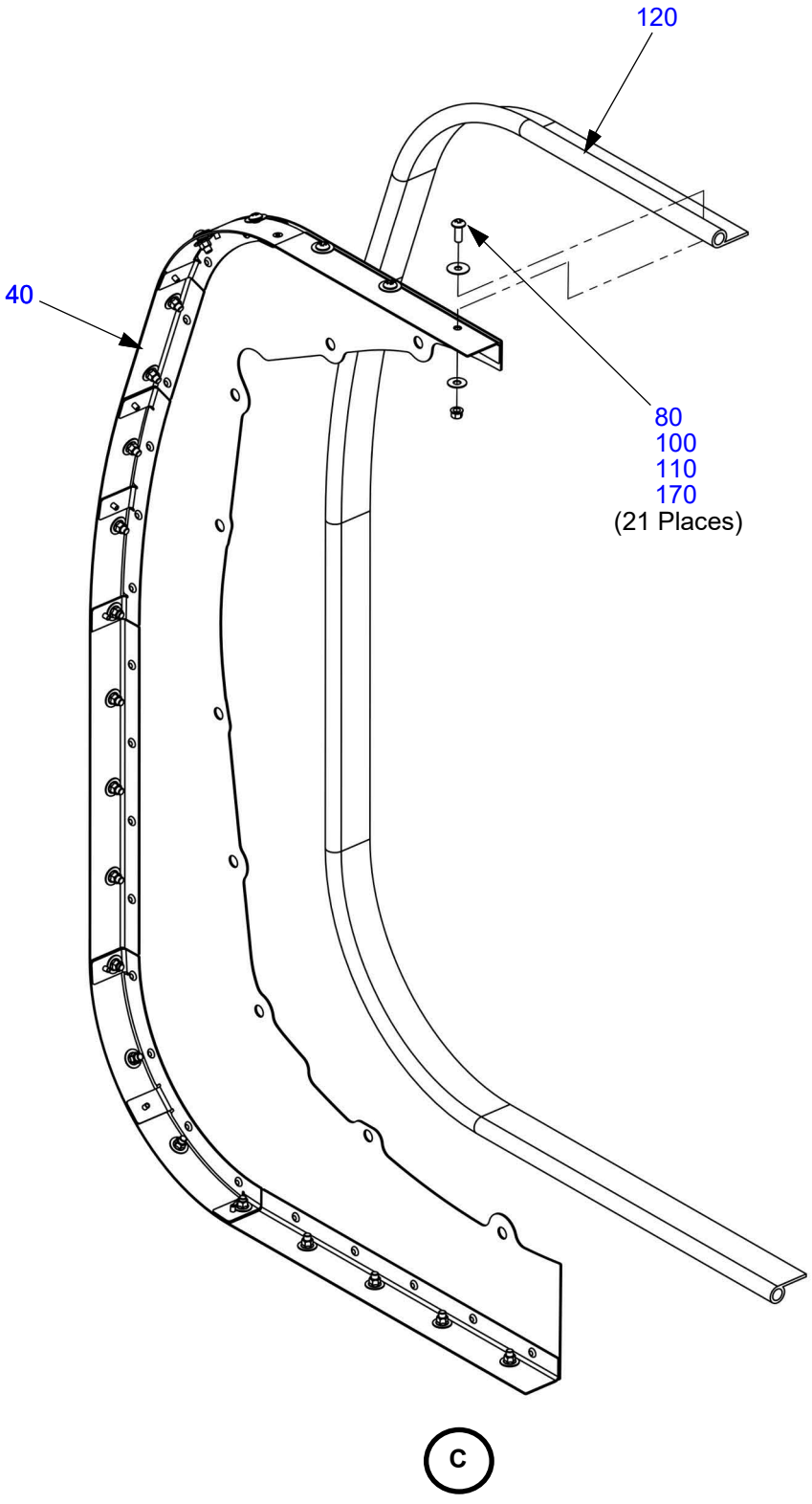

Figure 71-30.2: Aft Plenum Firewall (Continued)

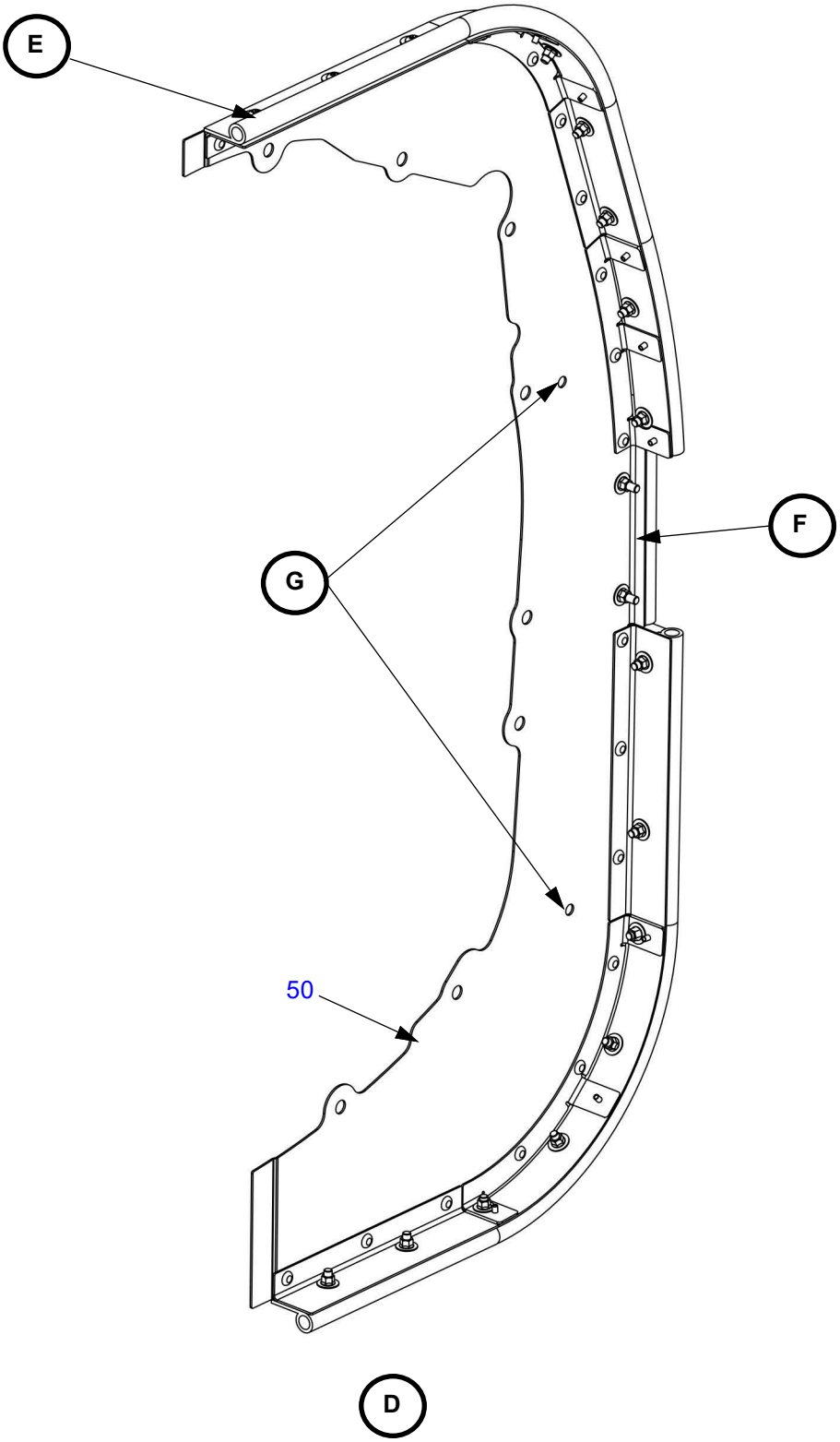

Figure 71-30.2: Aft Plenum Firewall (Continued)

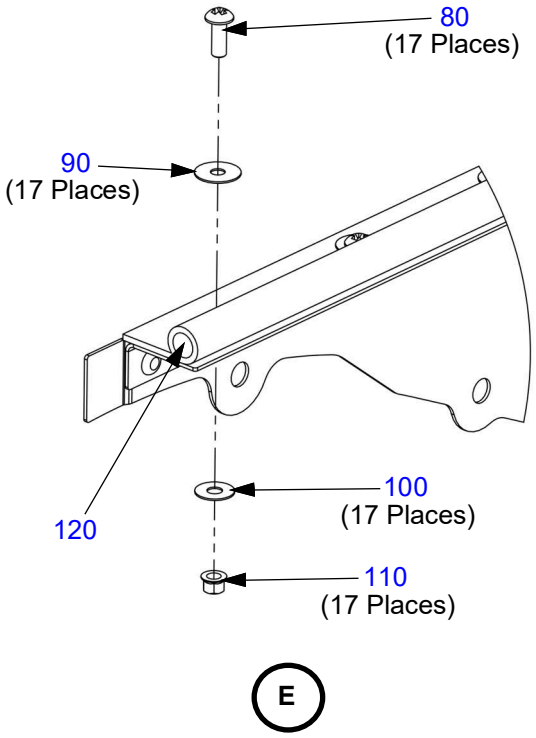

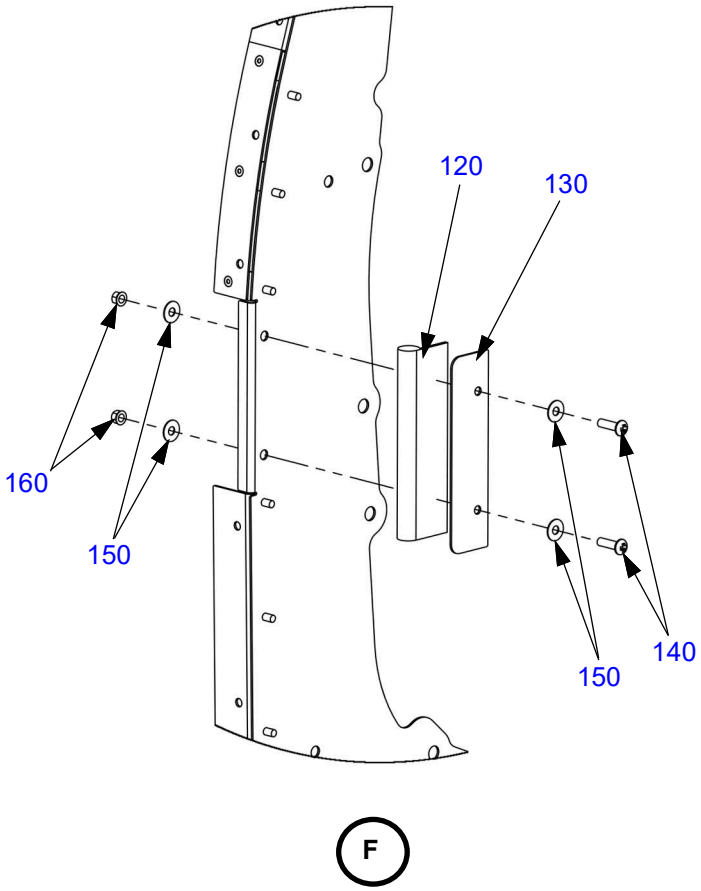

Figure 71-30.2: Aft Plenum Firewall (Continued)

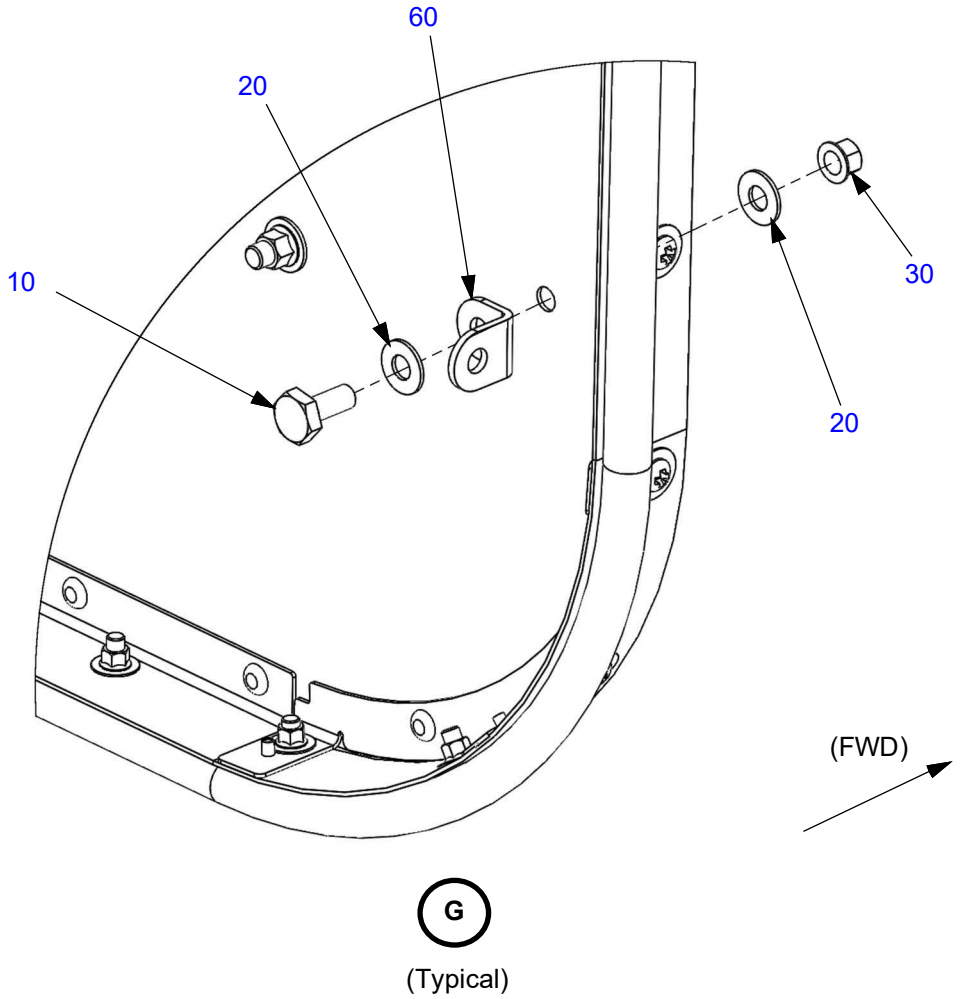

Table 71-30.2: Aft Plenum Firewall

Figure Item Number	Part Number	Part Name	Effectivity Code	Amount in Assy.
10	AN3-3A	Bolt, 10-32 x 15/32" Undrilled	K003 and On	18
20	NAS1149F0332P	Washer, Flat #10 x .032	K003 and On	34
30	MS21043-3	Nut, Self-locking, 800°, Reduced #10-32	K003 and On	18
40	AK71303100	Firewall, Plenum, Aft, Left	K003 and On	1
50	AK71303200	Firewall, Plenum, Aft, Right	K003 and On	1
60	AN743-C12	Bracket, Support, Clamp	K003 and On	2
70	NAS1149F0363P	Washer, Flat #10 x .063	K003 and On	2
80	MS51957-28	Screw, Pan Head, .138 x .375 Lg., CRES	K003 and On	38
90	NAS1149FN516P	Washer, Flat #5 x .016	K003 and On	17
100	NAS1149FN616P	Washer, Flat #6 x .016	K003 and On	38
110	MS21042L06	Nut, Self-locking, 450°, Reduced #6-32	K003 and On	38
120	PK99005044	Seal, Tadpole Tape, Fireseal Plenum	K003 and On	A/R
130	PK71303209	Backing Plate, Seal, Plenum, Aft	K003 and On	1
140	MS51957-30	Screw, Pan Head, .138 x ..500 Lg., CRES	K003 and On	2
150	NAS1149FN616P	Washer, Flat #6 x .016	K003 and On	4
160	MS21042L06	Nut, Self-locking, 450°, Reduced #6-32	K003 and On	2
170	NAS1149FN532P	Washer, Flat #5 x .032	K003 and On	21

Figure 71-30.3: Firewall Plate

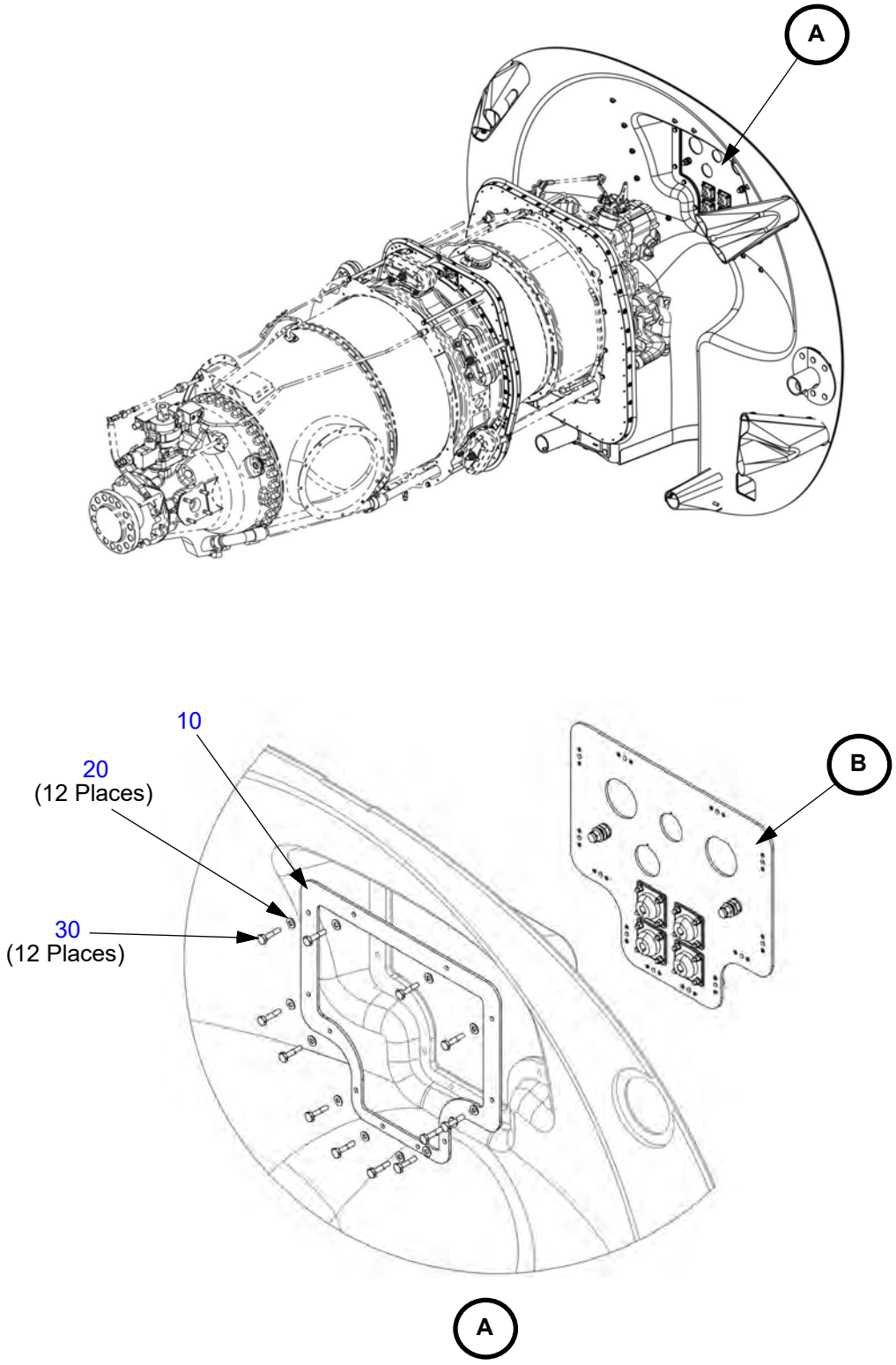

Figure 71-30.3: Firewall Plate (Continued)

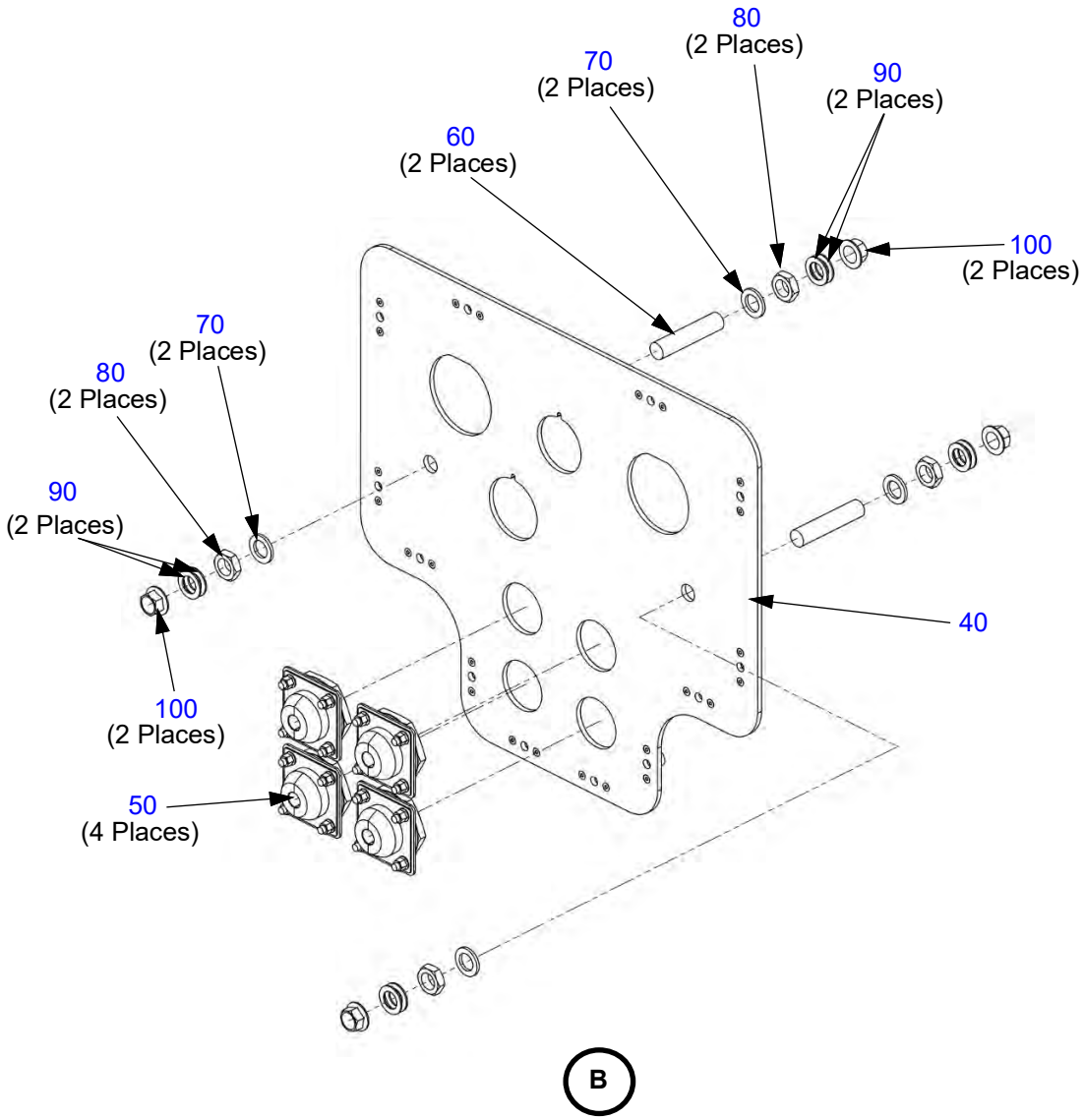

Table 71-30.3: Firewall Plate

Figure Item Number	Part Number	Part Name	Effectivity Code	Amount in Assy.
10	PK71305001	Ring, Plate, Firewall	K003 and On	1
20	AN3H7A	Bolt, 10-32 x 29/32" Drilled Head	K003 and On	12
30	NAS1149F0332P	Washer, Flat #10 x .032	K003 and On	12
40	PK71305101	Plate, Firewall	K003 and On	1
50	TTP-4100-330-50	Bulkhead Fitting	K003 and On	4
60	NAS1454C6-0112	Threaded Rod	K003 and On	2
70	NAS1149F0663P	Washer, Flat 3/8 x .063	K003 and On	4
80	AN316C6R	Nut, Jam, Hexagon, CRES 3/8-24	K003 and On	4
90	NAS1149F0632P	Washer, Flat 3/8 x .032	K003 and On	8
100	MS21043-6	Nut, Self-locking, 800°, Reduced 3/8-24	K003 and On	4

Figure 71-30.4: Firewall Blanket Penetration Panels and Wraps

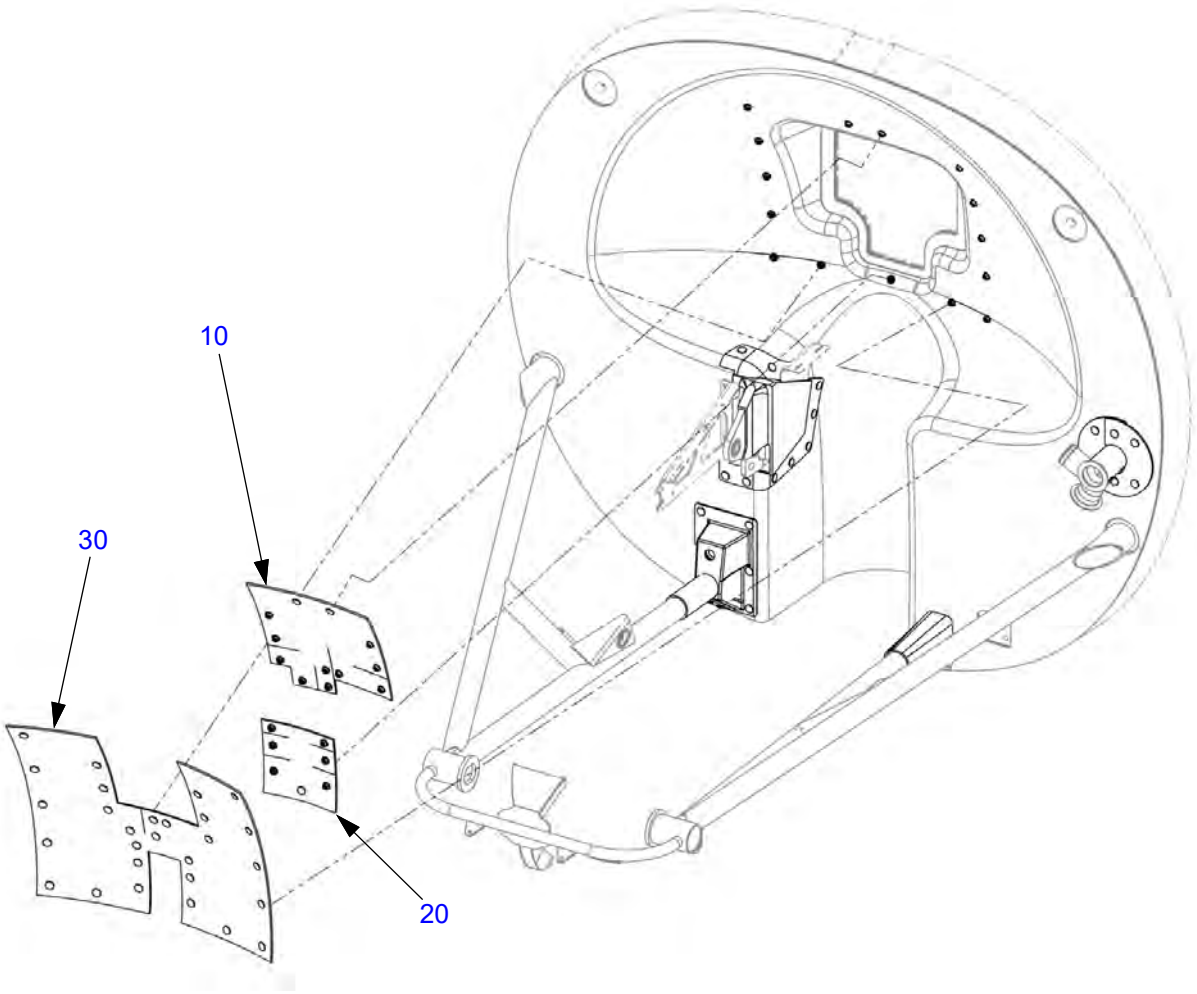

Figure 71-30.4: Firewall Blanket Penetration Panels and Wraps (Continued)

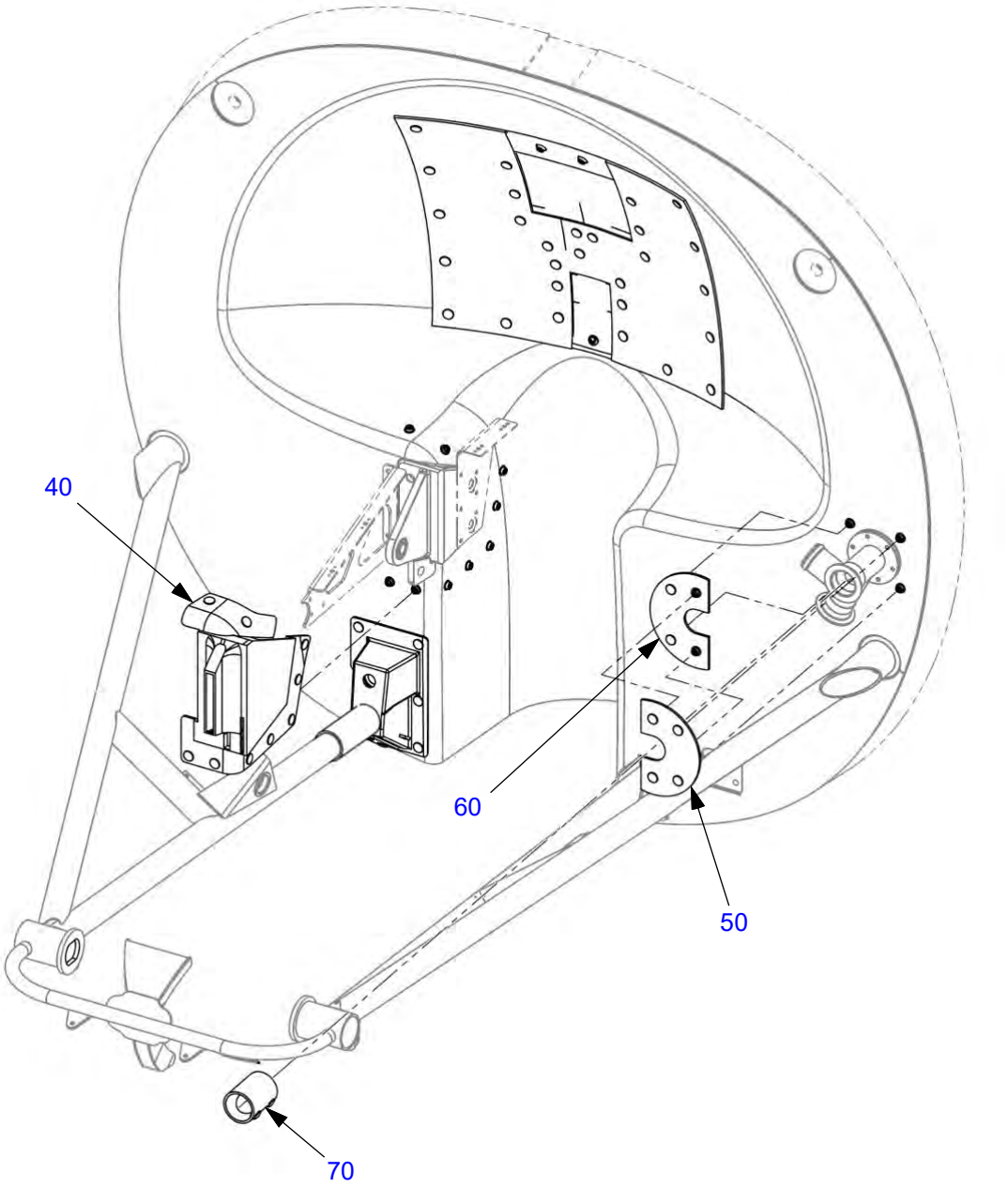

Figure 71-30.4: Firewall Blanket Penetration Panels and Wraps (Continued)

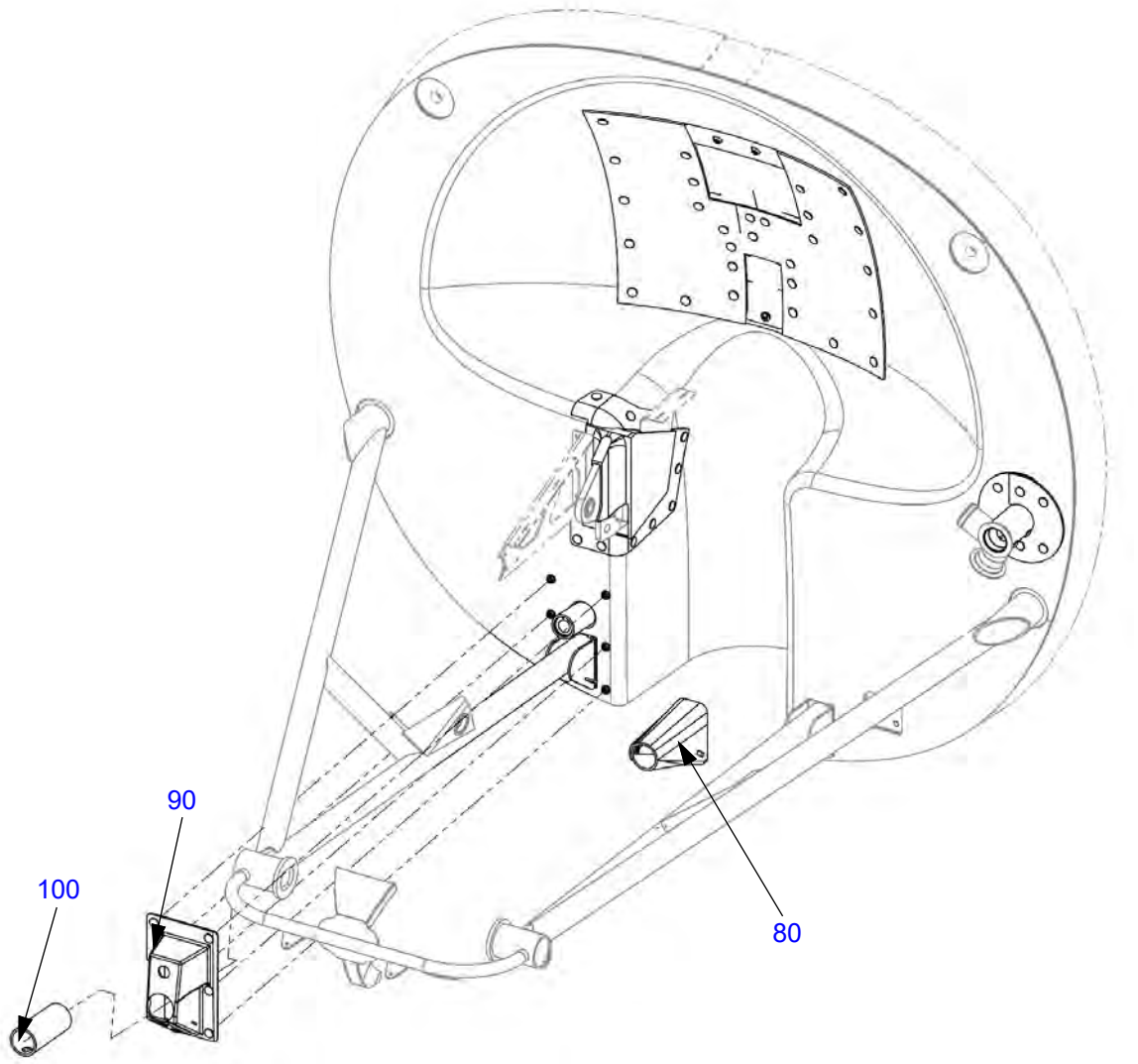

Figure 71-30.4: Firewall Blanket Penetration Panels and Wraps (Continued)

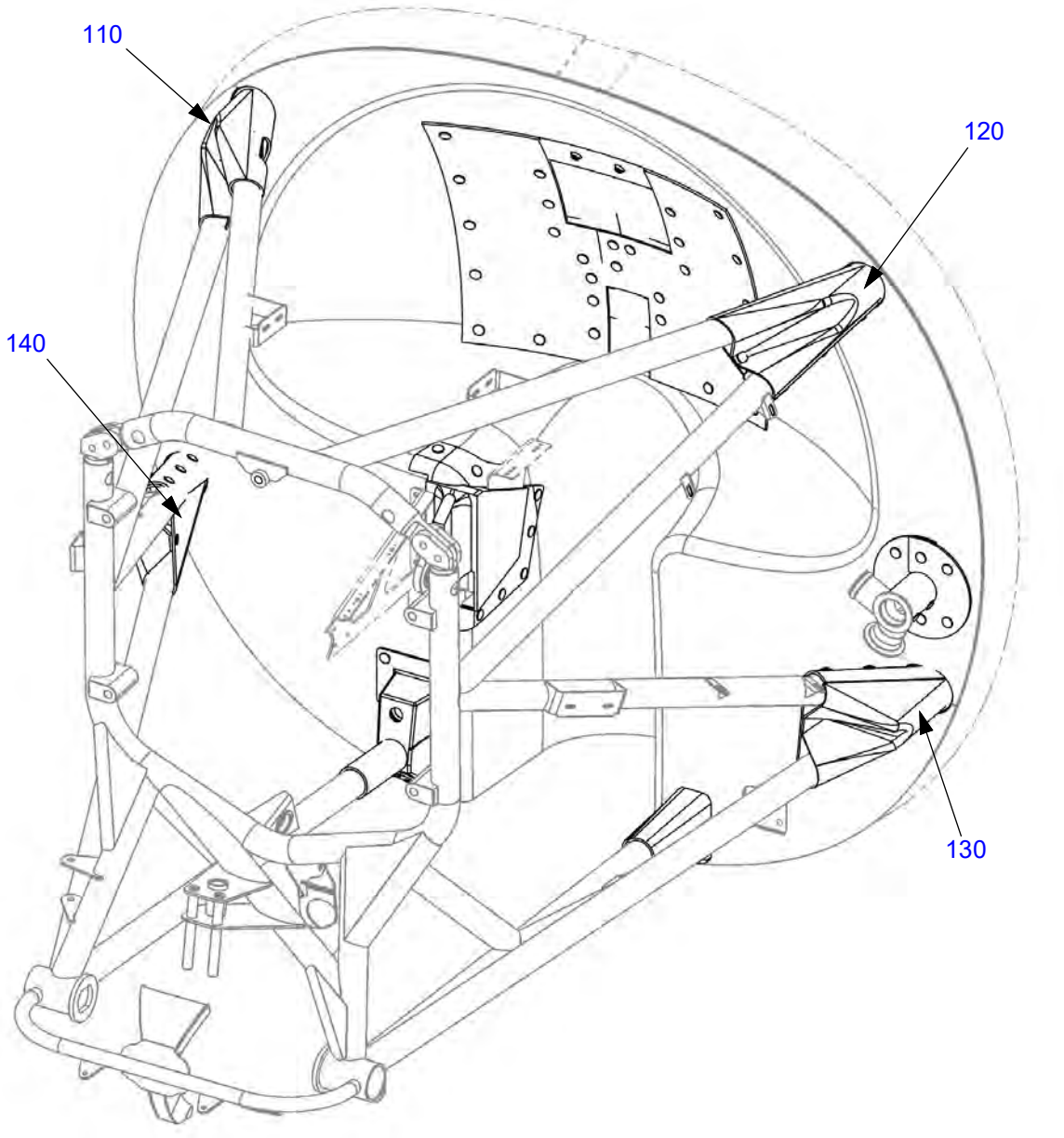

Table 71-30.4: Firewall Blanket Penetration Panels and Wraps

Figure Item Number	Part Number	Part Name	Effectivity Code	Amount in Assy.
10	PK71300003	Blanket, Upper, Firewall Plate	K003 and On	1
20	PK71300004	Blanket, Lower, Firewall Plate	K003 and On	1
30	PK71300002	Blanket, Large, Firewall Plate	K003 and On	1
40	PK71300005	Blanket, NLG Actuator, Firewall	K003 and On	1
50	PK71300006	Blanket, Left, Manifold, Firewall	K003 and On	1
60	PK71300007	Blanket, Right, Manifold, Firewall	K003 and On	1
70	PK71300015	Blanket, Tube, Manifold	K003 and On	1
80	PK71300014	Blanket, Engine Mount, Lower Left	K003 and On	1
90	PK71300008	Blanket, Steering, NLG, Firewall	K003 and On	1
100	PK71300013	Blanket, Engine Mount, Lower Right	K003 and On	1
110	PK71300010	Blanket, Engine Mount, Upper Right	K003 and On	1
120	PK71300009	Blanket, Engine Mount, Upper Left	K003 and On	1
130	PK71300011	Blanket, Engine Mount, Middle Left	K003 and On	1
140	PK71300012	Blanket, Engine Mount, Middle Right	K003 and On	1

ELECTRICAL HARNESS

Figure 71-50.1: Terminal Block

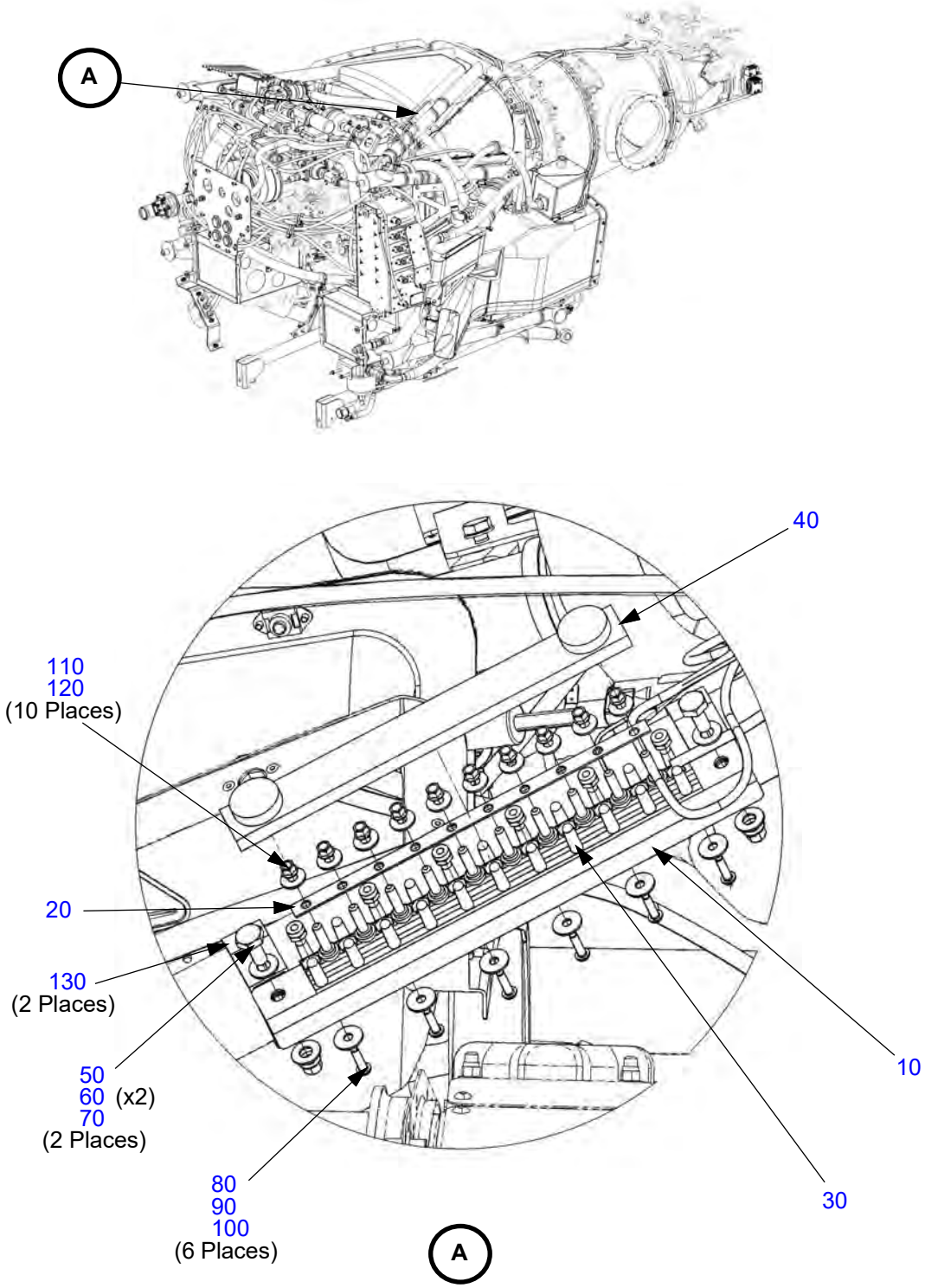

Table 71-50.1: Terminal Block

Figure Item Number	Part Number	Part Name	Effectivity Code	Amount in Assy.
10	PK71500005	Bracket, Terminal Block	K003 and On	1
20	MS25226-2-10	Link, Terminal, Connecting, #6	K003 and On	1
30	MS27212-1-10	Terminal Board, 10-stud, Electric, 6-32	K003 and On	1
40	MS18029-1S-10	Cover Assembly, Electrical, 10 Terminal Board, 6-32	K003 and On	1
50	AN3-3A	Bolt, 10-32 x 15/32" Undrilled	K003 and On	2
60	NAS1149F0332P	Washer, Flat #10 x .032	K003 and On	4
70	MS21042L3	Nut, Self-locking, 450°, Reduced #10-32	K003 and On	2
80	MS51957-16	Screw, Pan Head, .112 x .438 Lg., CRES	K003 and On	6
90	NAS1149FN532P	Washer, Flat #5 x .032	K003 and On	6
100	MS21045L04	Nut, Self-locking, Steel .112-40	K003 and On	6
110	MS21042L06	Nut, Self-locking, 450°, Reduced #6-32	K003 and On	10
120	NAS1149FN632P	Washer, Flat #6 x .032	K003 and On	10
130	AS21919WCJ24	Clamp, Loop Type, Cushioned, CRES, Ø 1.500	K003 and On	2

Figure 71-50.2: Engine Ground Straps

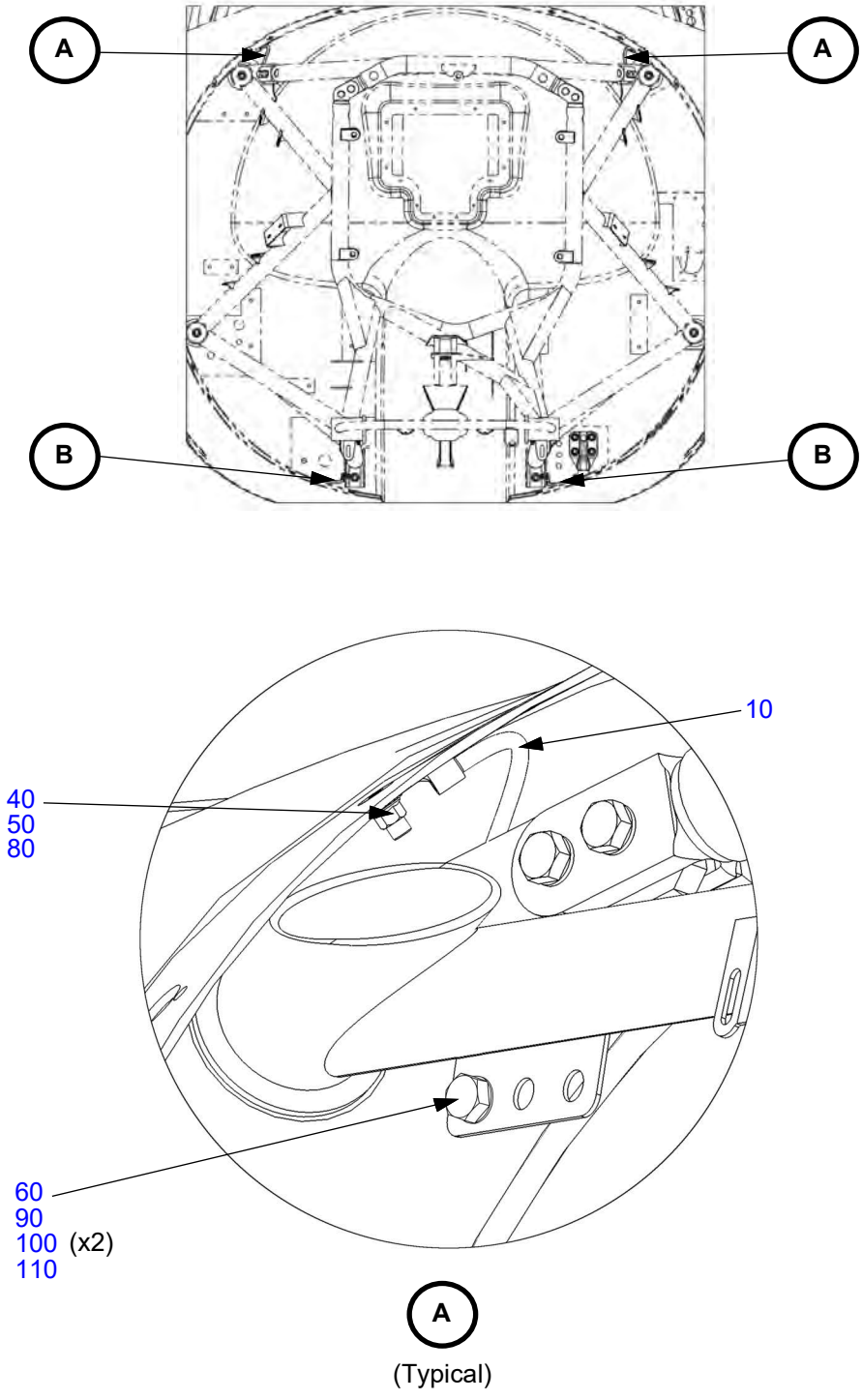

Figure 71-50.2: Engine Ground Straps (Continued)

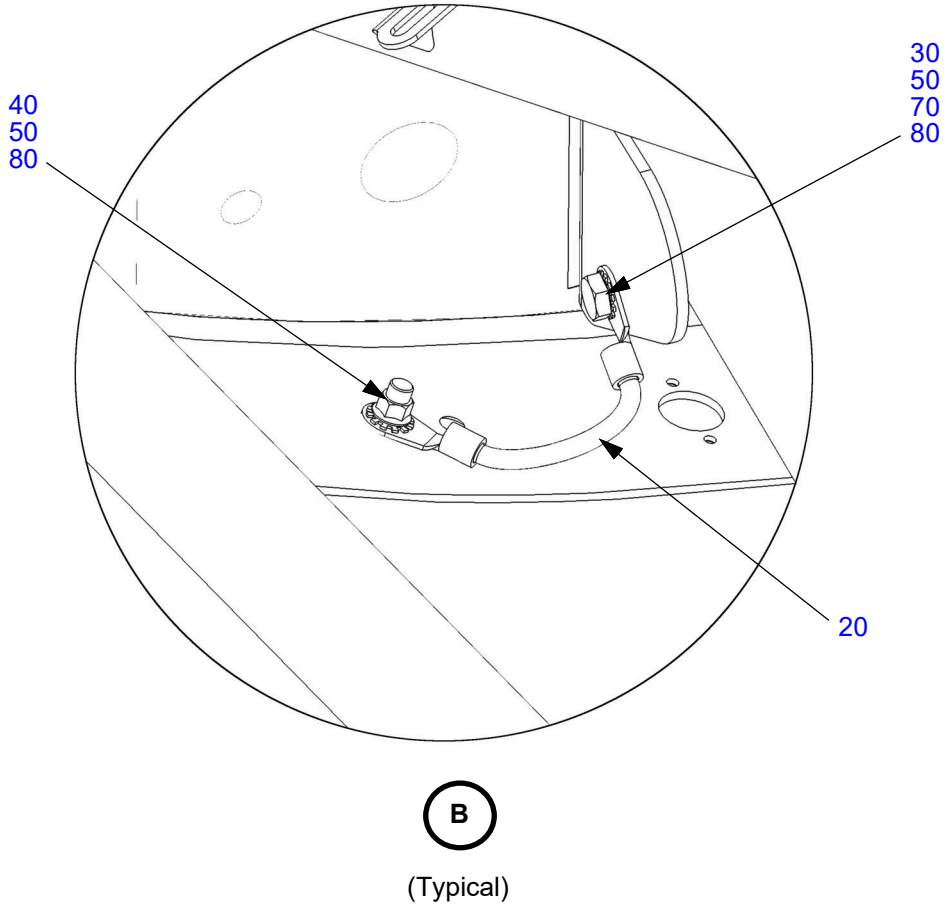

Table 71-50.2: Engine Ground Straps

Figure Item Number	Part Number	Part Name	Effectivity Code	Amount in Assy.
10	AK13007102 M83413/8-H007MU	Ground Strap, 1/4" To 5/16" Terminal Ring, 7" Long	K003 and On	2
20	AK13002804	Ground Strap, Fuel Line, Return To Stud	K003 and On	2
30	AN4-4A	Bolt, 1/4-28 x 17/32" Undrilled	K003 and On	2
40	MS24694-C96	Screw, Machine, C'sunk, CRES Ø .250 x 19/32	K003 and On	4
50	MS35335-33	Washer, Lock, Flat-external Tooth, Ø.250	K003 and On	6
60	MS35335-35	Washer, Lock, Flat-external Tooth, Ø.375	K003 and On	2
70	NAS1149F0432P	Washer, Flat 1/4 x .032	K003 and On	2
80	MS21042L4	Nut, Self-locking, 450°, Reduced 1/4-28	K003 and On	6
90	AN6-5A	Bolt, 3/8-24 x 45/64" Undrilled	K003 and On	2
100	NAS1149F0632P	Washer, Flat 3/8 x .032	K003 and On	4
110	MS21042L6	Nut, Self-locking, 450°, Reduced 3/8-24	K003 and On	2

This Page Intentionally Left Blank

ENGINE AIR INTAKES

Figure 71-60.1: Inertial Separators and Plenum

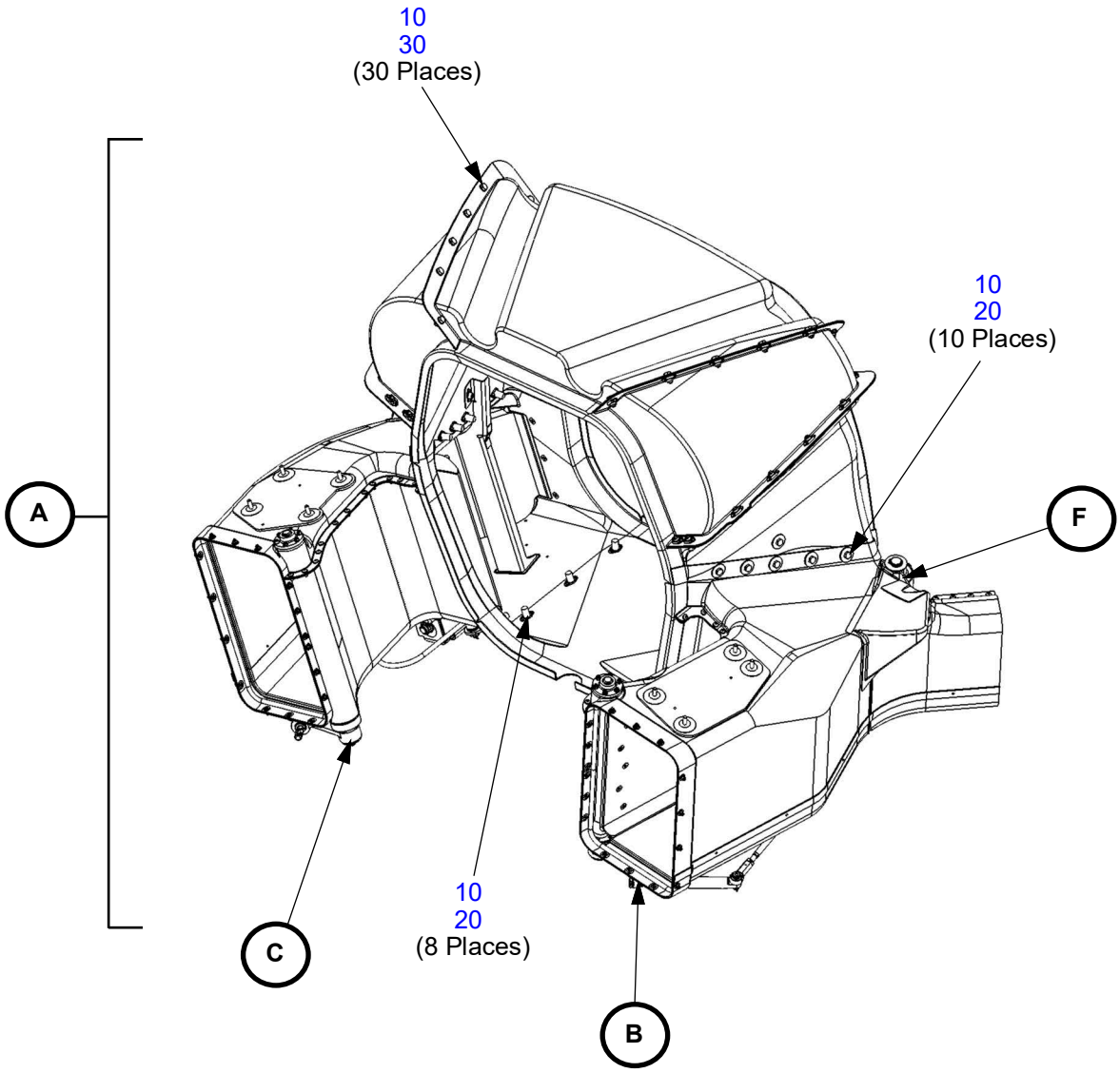

Figure 71-60.1: Inertial Separators and Plenum (Continued)

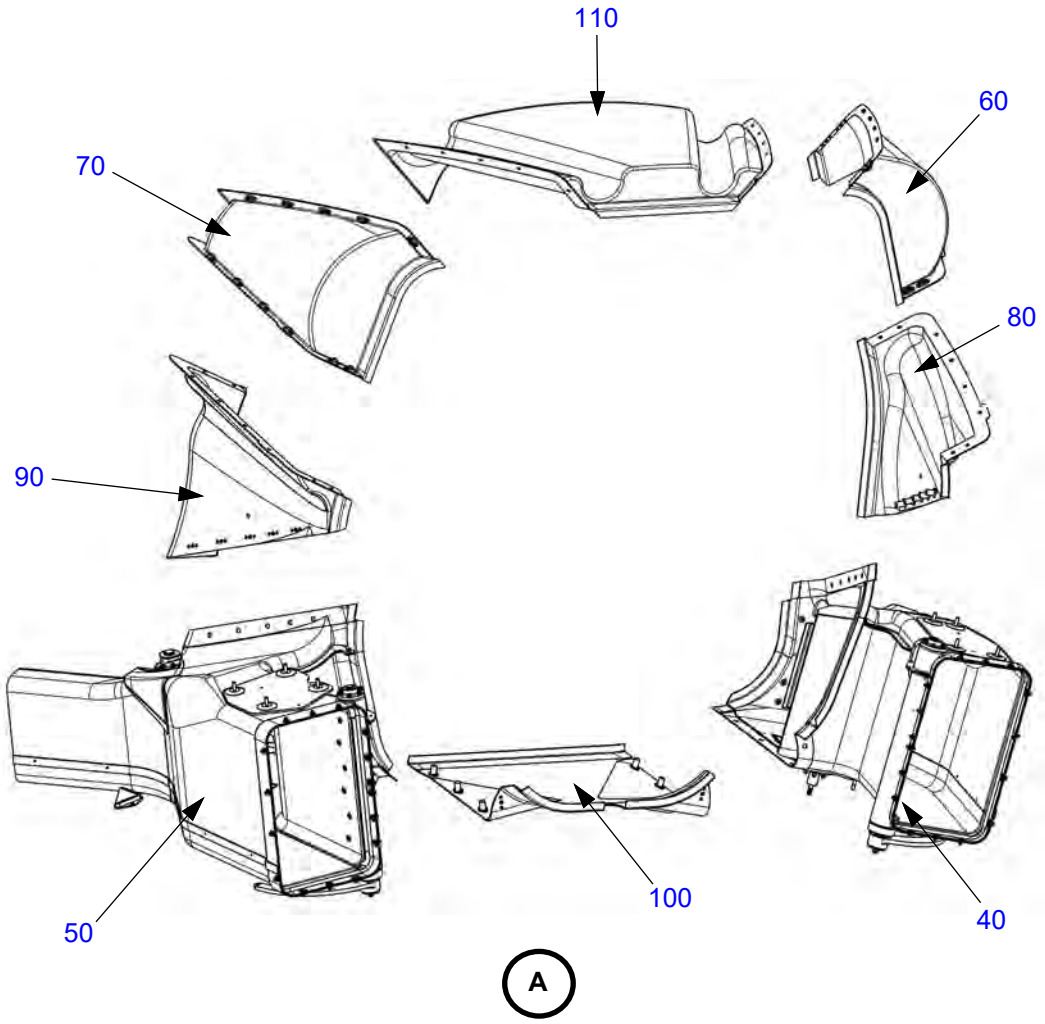

Figure 71-60.1: Inertial Separators and Plenum (Continued)

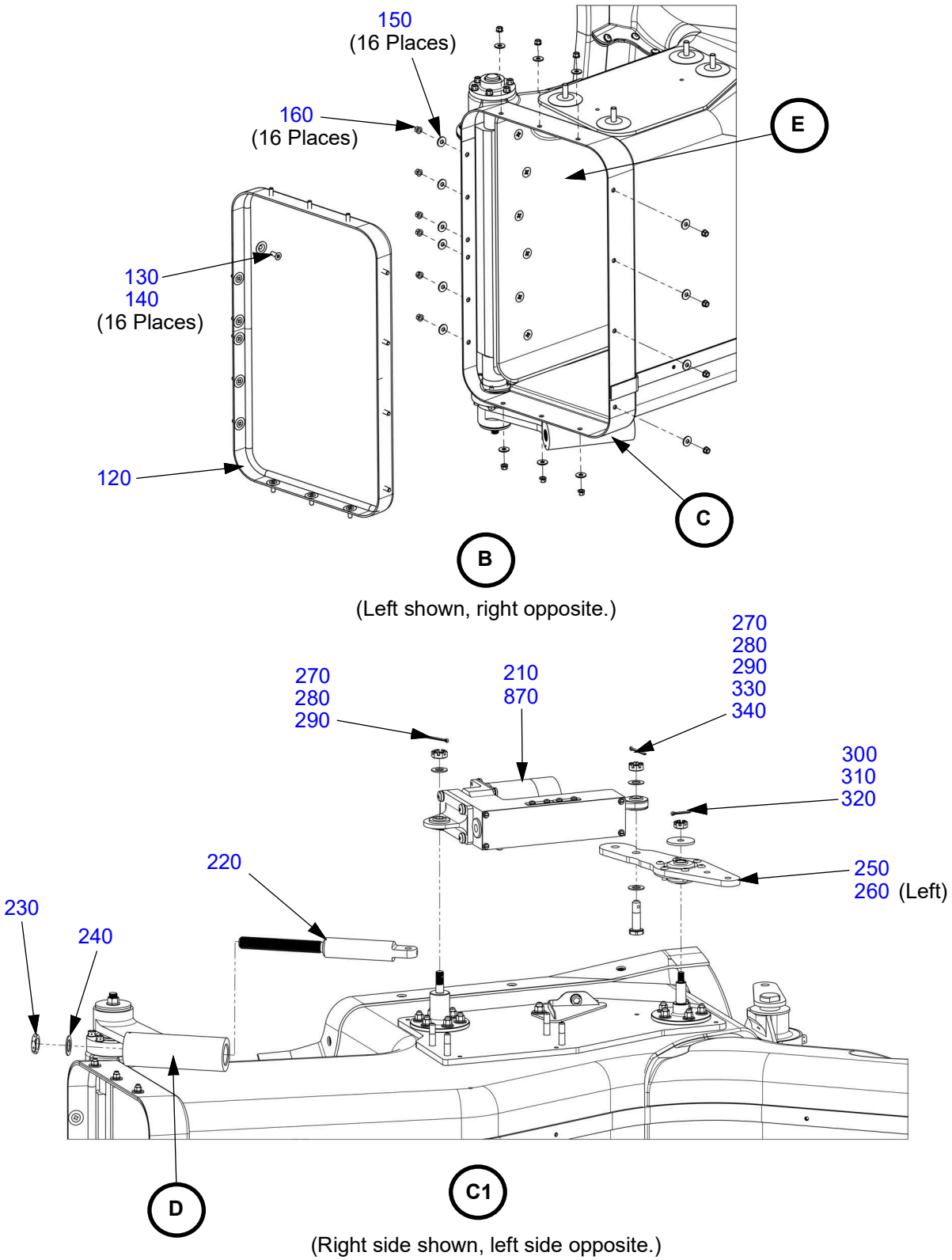

Figure 71-60.1: Inertial Separators and Plenum (Continued)

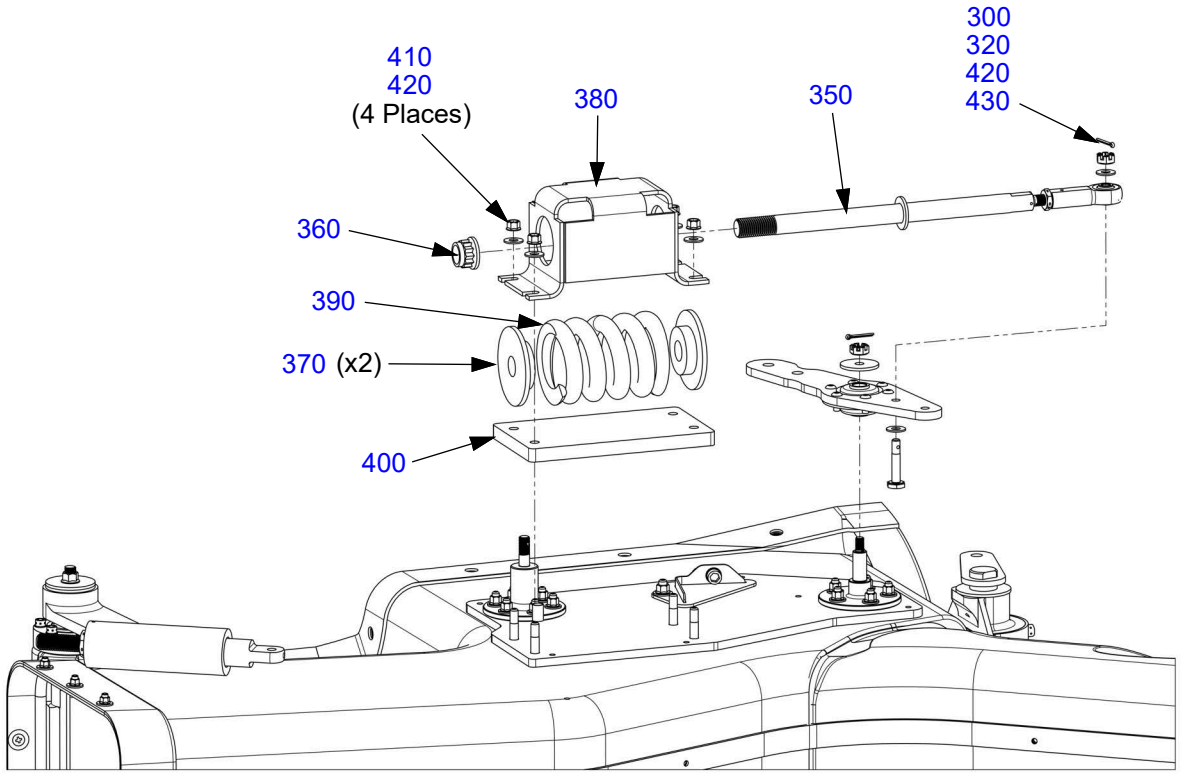

C2

(Right side shown, left side opposite.)

Pre-SN K011 and pre-SB 0006 Rev. A aircraft only.

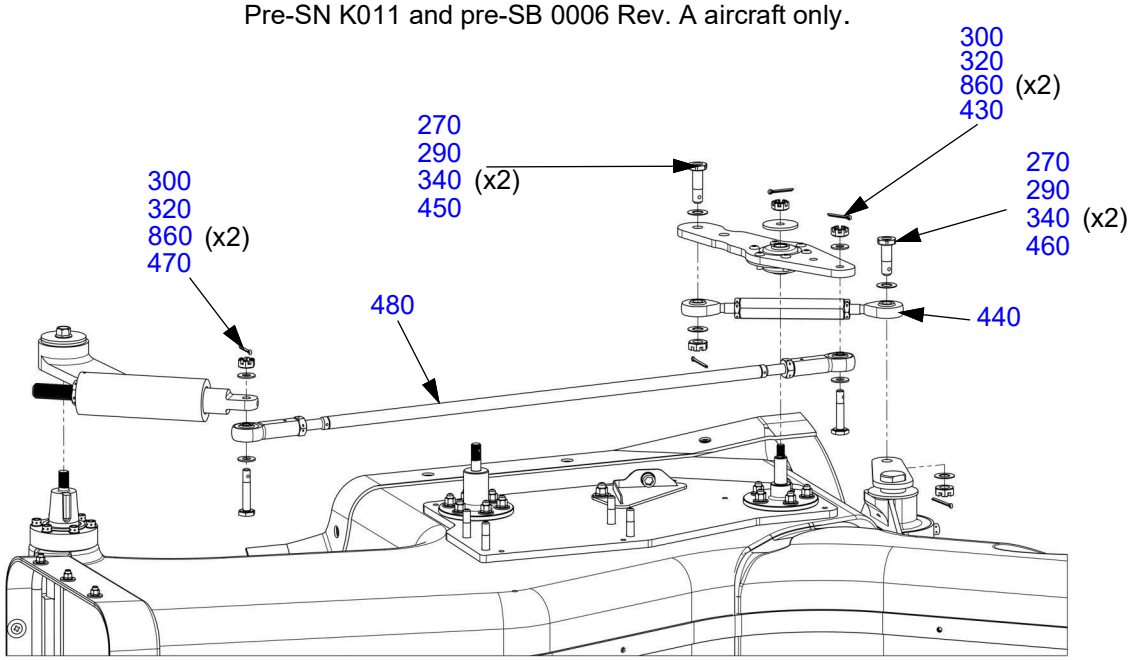

C3

(Right side shown, left side opposite.)

Figure 71-60.1: Inertial Separators and Plenum (Continued)

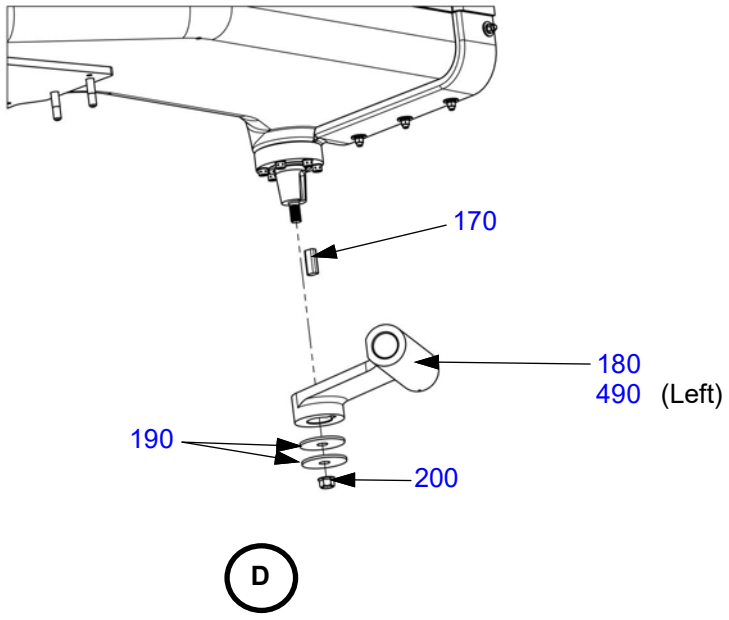

(Right side shown, left side opposite.)

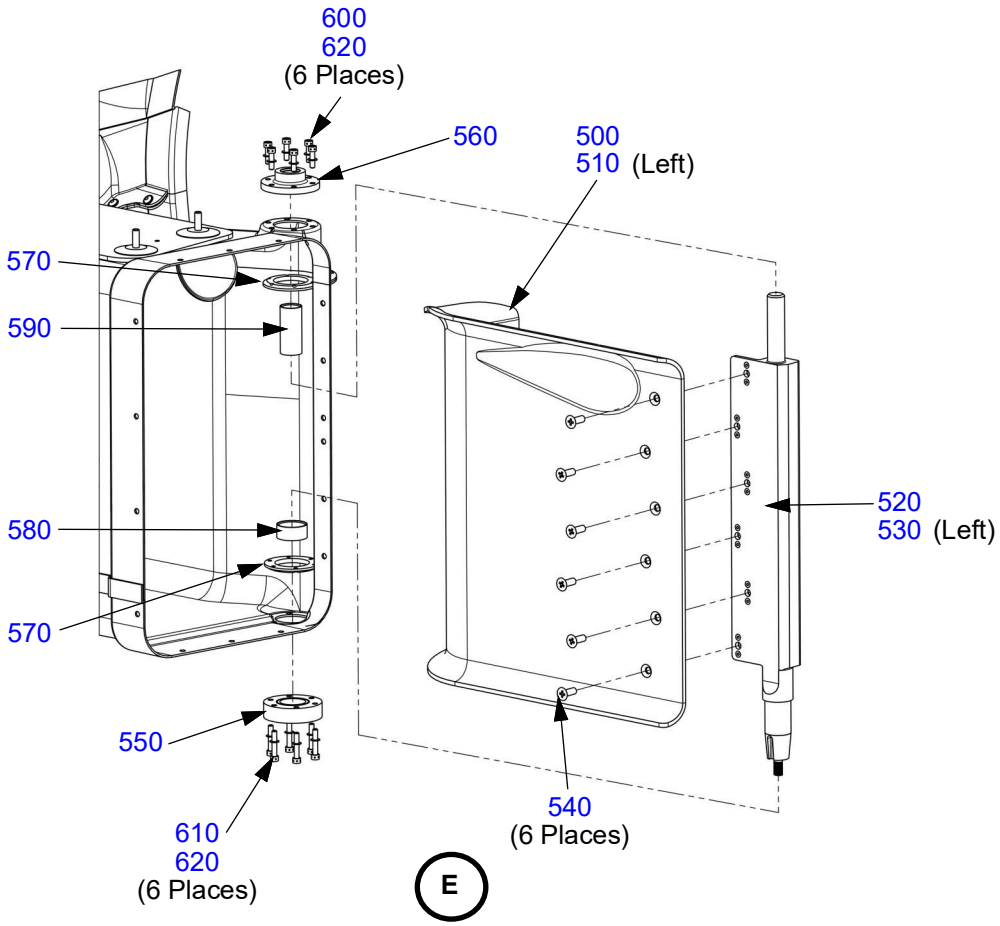

(Right side shown, left side opposite.)

Figure 71-60.1: Inertial Separators and Plenum (Continued)

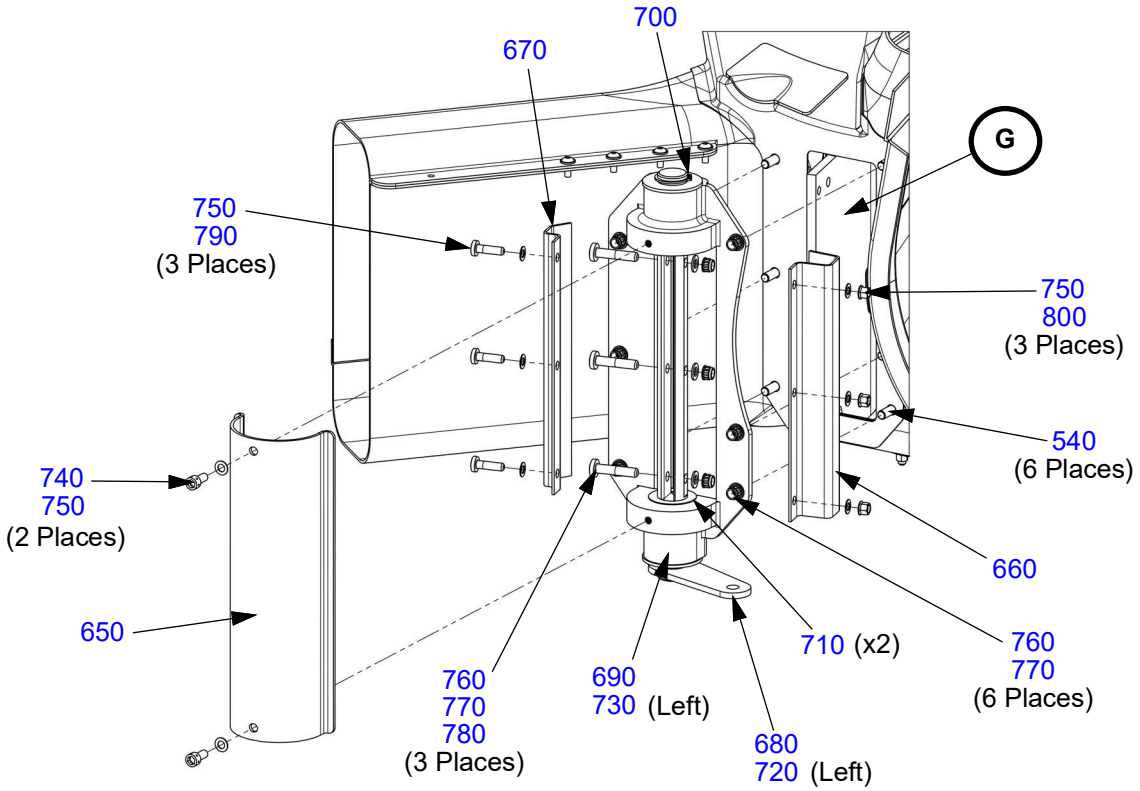

F

(Right side shown, left side opposite.)

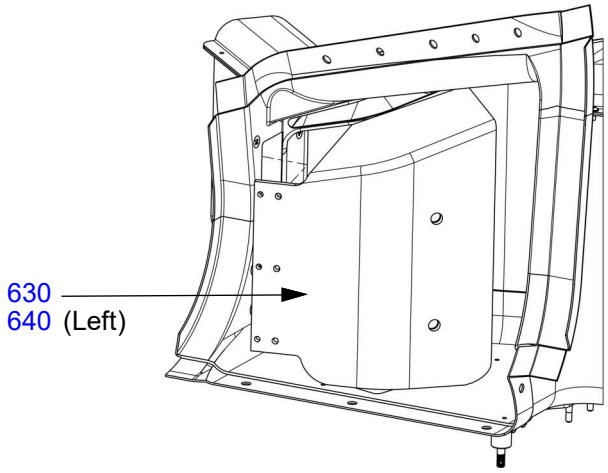

G

(Right side shown, left side opposite.)

Figure 71-60.1: Inertial Separators and Plenum (Continued)

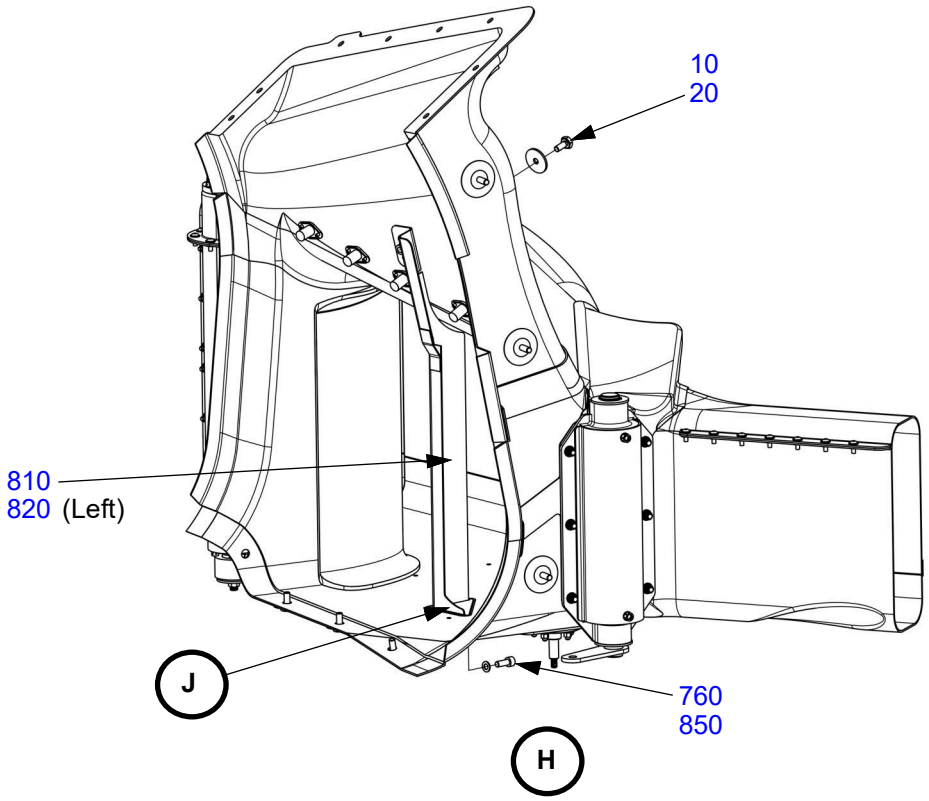

(Right side shown, left side opposite.)

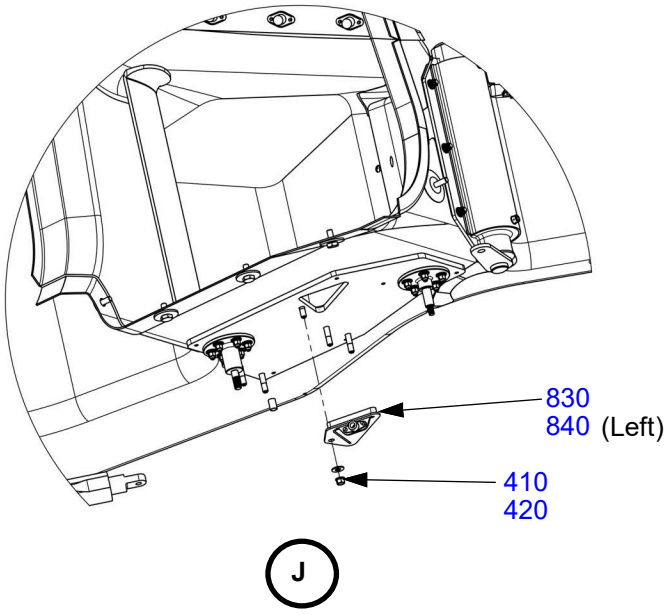

(Right side shown, left side opposite.)

Table 71-60.1: Inertial Separators and Plenum

Figure Item Number	Part Number	Part Name	Effectivity Code	Amount in Assy.
10	AN3-3A	Bolt, 10-32 x 15/32" Undrilled	K003 and On	50
20	AN970-3	Washer, Flat #10 x .063	K003 and On	20
30	NAS1149F0332P	Washer, Flat #10 x .032	K003 and On	30
40	AK71611000	Inertial Separator, Left, Assy	K003 and On	1
50	AK71611102	Inertial Separator, Right, Assy	K003 and On	1
60	AK71613100	Plenum, Upper, Left, Assy	K003 and On	1
70	AK71613200	Plenum, Upper, Right, Assy	K003 and On	1
80	AK71613300	Plenum, Middle, Left, Assy	K003 and On	1
90	AK71613400	Plenum, Middle, Right, Assy	K003 and On	1
100	AK71613600	Plenum, Bottom, Assy	K003 and On	1
110	PK71613101	Plenum, Upper	K003 and On	1
120	PK99005043	Seal, Tadpole Tape, Inertial Separators Assy	K003 and On	2
130	MS24693-C26	Screw, Machine, C'sunk, CRES Ø .138 x 0.375	K003 and On	32
140	NAS1169C6L	Washer, Dimpled, CRES No. 6 x .016	K003 and On	32
150	NAS1149FN632P	Washer, Flat #6 x .032	K003 and On	32
160	MS21043-06	Nut, Self-locking, 800°, Reduced #6-32	K003 and On	32
170	PK71600043	Locking Key, Vane Shaft, Inertial Separator	K003 and On	2
180	PK71600063	Lever Arm, Vane Shaft, Inertial Separator, Right	K003 and On	1
190	AN970-4	Washer, Flat 1/4 x .063	K003 and On	4
200	MS21042L4	Nut, Self-locking, 450°, Reduced 1/4-28	K003 and On	2
210*	AK71694000***	Assy, Linear Actuator, Non-Braked	K003 -K010	2
220	PK71600064	Adjustment Rod, Lever Arm, Inertial Separator	K003 and On	2
230	NAS1423-6	Nut, Jam, Drilled, Cad Steel 3/8-24	K003 and On	2

Figure Item Number	Part Number	Part Name	Effectivity Code	Amount in Assy.
240	NAS1149F0632P	Washer, Flat 3/8 x .032	K003 and On	2
250	AK71670000	Bellcrank Assy, Right, Inertial Separator	K003 and On	1
260	AK71640000	Bellcrank Assy, Left, Inertial Separator	K003 and On	1
270	AN320-4	Nut, Castellated, Shear, Steel 1/4-28	K003 and On	8
280	NAS1149F0432P	Washer, Flat 1/4 x .032	K003 and On	4
290	MS24665-134	Pin, Cotter, Cad Steel Ø .062 x .75	K003 and On	8
300	AN320-3	Nut, Castellated, Shear, Steel 3/16-32	K003 and On	8
310	AN970-3	Washer, Flat #10 x .063	K003 and On	2
320	MS24665-132	Pin, Cotter, Cad Steel Ø .062 x .50	K003 and On	8
330	NAS6204-09D	Bolt, 1/4-28 x .562 Grip, Drilled Shank	K003 and On	2
340	NAS1149F0416P	Washer, Flat 1/4 x .016	K003 and On	6
350	AK71601061	Assy, Pressure Rod, Inertial Separator	K003 - K010	2
360	NAS1804-7	Nut, Self-locking, 12 Point Ø .438-20	K003 - K010	2
370	PK71600060	Pressure Bushing, Stop Spring, Inertial Separator	K003 - K010	4
380	PK71600059	Housing, Stop Spring, Inertial Separator	K003 - K010	2
390	PK99006025	Die Spring - 2500 Lb-in Rate	K003 - K010	2
400	PK71693601	Spacer Plate, Stop Spring, Inertial Separa-tor	K003 - K010	2
410	MS21042L3	Nut, Self-locking, 450°, Reduced #10-32	K003 - K010	6
420	NAS1149F0332P	Washer, Flat #10 x .032	K003 and On	10
430	NAS6203-10D	Bolt, 3/16-32 x .672 Grip, Drilled Shank	K003 and On	4
440	AK71630000	Tie Rod Assy, Aft Inertial Separator	K003 and On	2
450	NAS6204-08D	Bolt, 1/4-28 x .500 Grip, Drilled Shank	K003 and On	2
460	NAS6204-07D	Bolt, 1/4-28 x .437 Grip, Drilled Shank	K003 and On	2
470	NAS6203-11D	Bolt, 3/16-32 x .734 Grip, Drilled Shank	K003 and On	2
480	AK71620000	Tie Rod Assy, Fwd, Inertial Separator	K003 and On	2

Figure Item Number	Part Number	Part Name	Effectivity Code	Amount in Assy.
490	PK71600062	Lever Arm, Vane Shaft, Inertial Separator, Left	K003 and On	1
500	PK71612103	Inertial Separator, No. 1 Vane, Right	K003 and On	1
510	PK71611103	Inertial Separator, No. 1 Vane, Left	K003 and On	1
520	AK71692800	Shaft Assy, Vane, Right, Inertial Separator	K003 and On	1
530	AK71692900	Shaft Assy, Vane, Left, Inertial Separator	K003 and On	1
540	MS24694-C50	Screw, Machine, C'sunk, CRES Ø .190 x 17/32	K003 and On	24
550	AK71692300	Housing Assy, Bushing, Bottom, Inertial Separator	K003 and On	2
560	AK71692400	Housing Assy, Bushing, Top, Inertial Separator	K003 and On	2
570	PK71600010	Nut Plate, Vane, Inertial Separator	K003 and On	4
580	PK71600057	Spacer, Shaft, Lower, Inertial Separator	K003 and On	2
590	PK71600058	Spacer, Shaft, Upper, Inertial Separator	K003 and On	2
600	NAS1352-06H8P	Screw, Socket Head, Drilled .138-32 x .500	K003 and On	12
610	NAS1352-06H12P	Screw, Socket Head, Drilled .138-32 x .750	K003 and On	12
620	NAS620C6	Washer, Reduced OD, CRES, .143 ID x .267 OD	K003 and On	24
630	AK71693200	Vane No. 2 Assy, Right, Inertial Separator	K003 and On	1
640	AK71693100	Vane No. 2 Assy, Left, Inertial Separator	K003 and On	1
650	PK71600054	Cover, Shaft, No. 2 Vane	K003 and On	2
660	PK71600055	Cavity Shield, Inboard, No. 2 Vane, Inboard	K003 and On	2
670	PK71600056	Cavity Shield, Outboard, No. 2 Vane	K003 and On	2
680	AK71692200	Shaft Weldment, Right, No. 2 Vane	K003 and On	1
690	AK71692600	Housing Assy, Vane No. 2, Right Inertial Separator	K003 and On	1
700	MS16624-1062	Retaining Ring, External, Ø.625 Shaft	K003 and On	2

Figure Item Number	Part Number	Part Name	Effectivity Code	Amount in Assy.
710	PK99007116	Shim Washer, 5/8" ID x 1" OD x .016" Thick	K003 and On	4
720	AK71692100	Shaft Weldment, Left, No. 2 Vane	K003 and On	1
730	AK71692700	Housing Assy, Vane No. 2, Left Inertial Separator	K003 and On	1
740	NAS1352-08H6P	Screw, Socket Head, Drilled .164-32 x .375	K003 and On	4
750	NAS620C8	Washer, Reduced OD, CRES, .169 ID x .304 OD	K003 and On	16
760	NAS620C10L	Washer, Reduced OD, CRES, .195 ID x .354 OD	K003 and On	20
770	NAS1804-3	Nut, Self-locking, 12 Point Ø .190-32	K003 and On	18
780	MS27039-1-14	Screw, Pan Head, .190 x .906 LG.	K003 and On	6
790	MS27039-0809	Screw, Pan Head, .164 x .594 LG.	K003 and On	
800	MS21042L08	Nut, Self-locking, 450°, Reduced #8-32	K003 and On	
810	AK71690000	Vane Assy, Shedder, Right	K003 and On	1
820	AK71692500	Vane Assy, Shedder, Left	K003 and On	1
830	AK71693400	Cap Assy, Shedder, Right, Inertial Separa-tor	K003 and On	1
840	AK71693300	Cap Assy, Shedder, Left, Inertial Separator	K003 and On	1
850	NAS1351-3-8P	Screw, Socket Head Ø .190-32 x .500	K003 and On	2
860	NAS1149F0316P	Washer, Flat #10 x .016	K003 and On	8
870**	AK71694100	Assy, Linear Actuator, Braked	K011 and On	2

*Pre-SN K011 and pre-SB-0006 Rev. A aircraft only.

**Post SN K011 and post-SB-0006 Rev. A aircraft only.

***Caution: Damage to the intake will occur if a non-braked actuator (PN: AK71694000) is installed on an aircraft without the stop spring assembly installed. Verify the configuration before ordering or installing a new actuator.

This Page Intentionally Left Blank

ENGINE DRAINS

Figure 71-70.1: Engine Drains

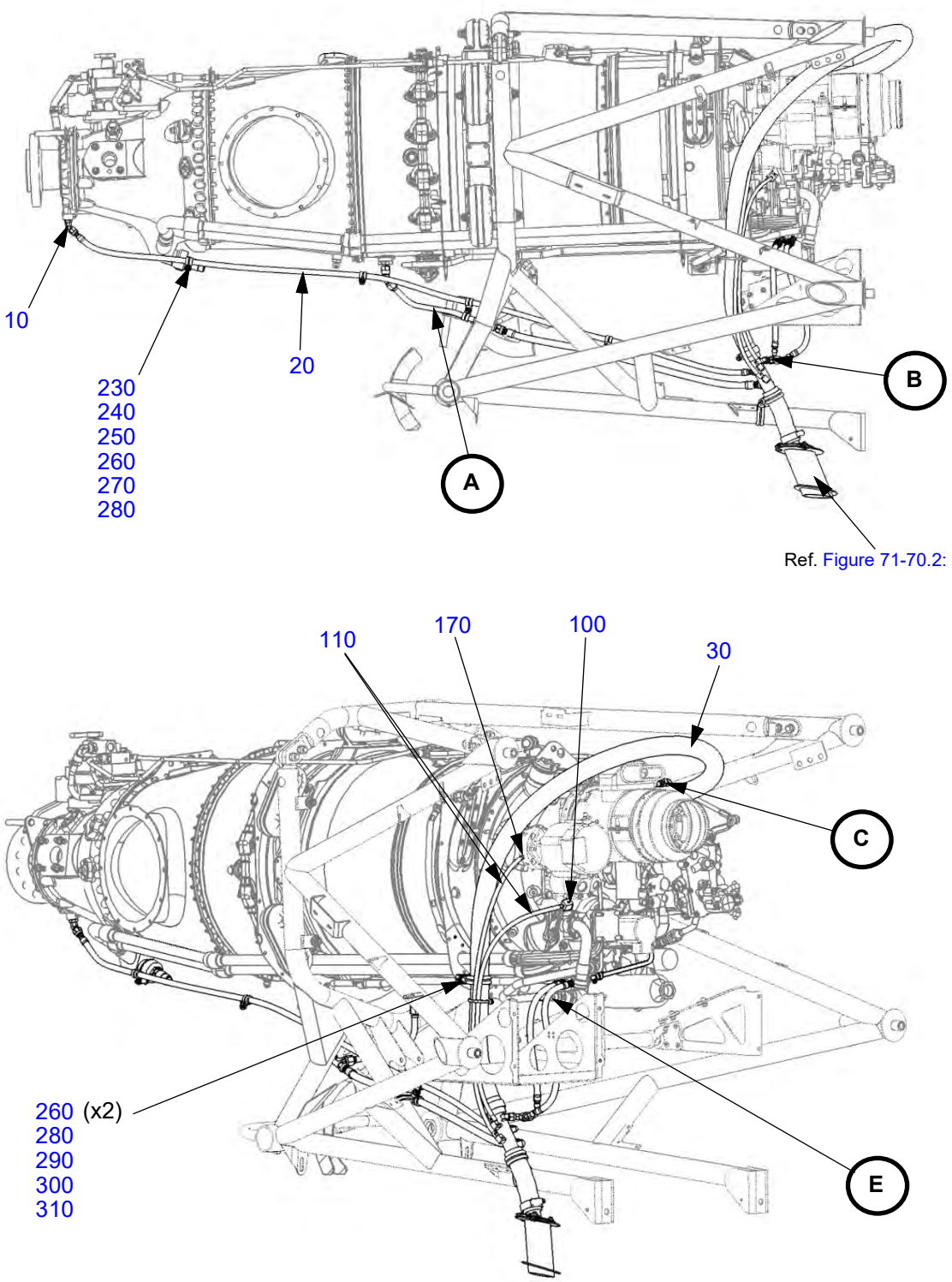

Figure 71-70.1: Engine Drains (Continued)

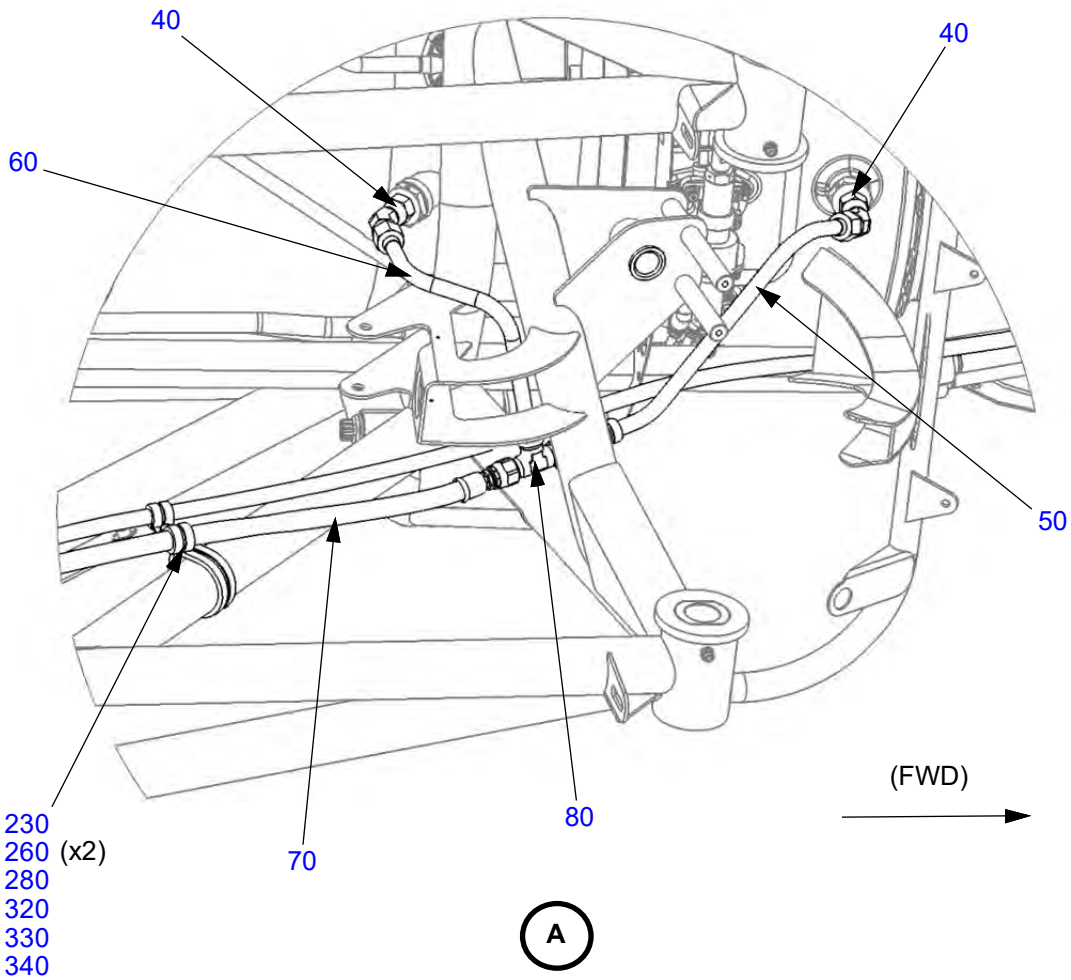

Figure 71-70.1: Engine Drains (Continued)

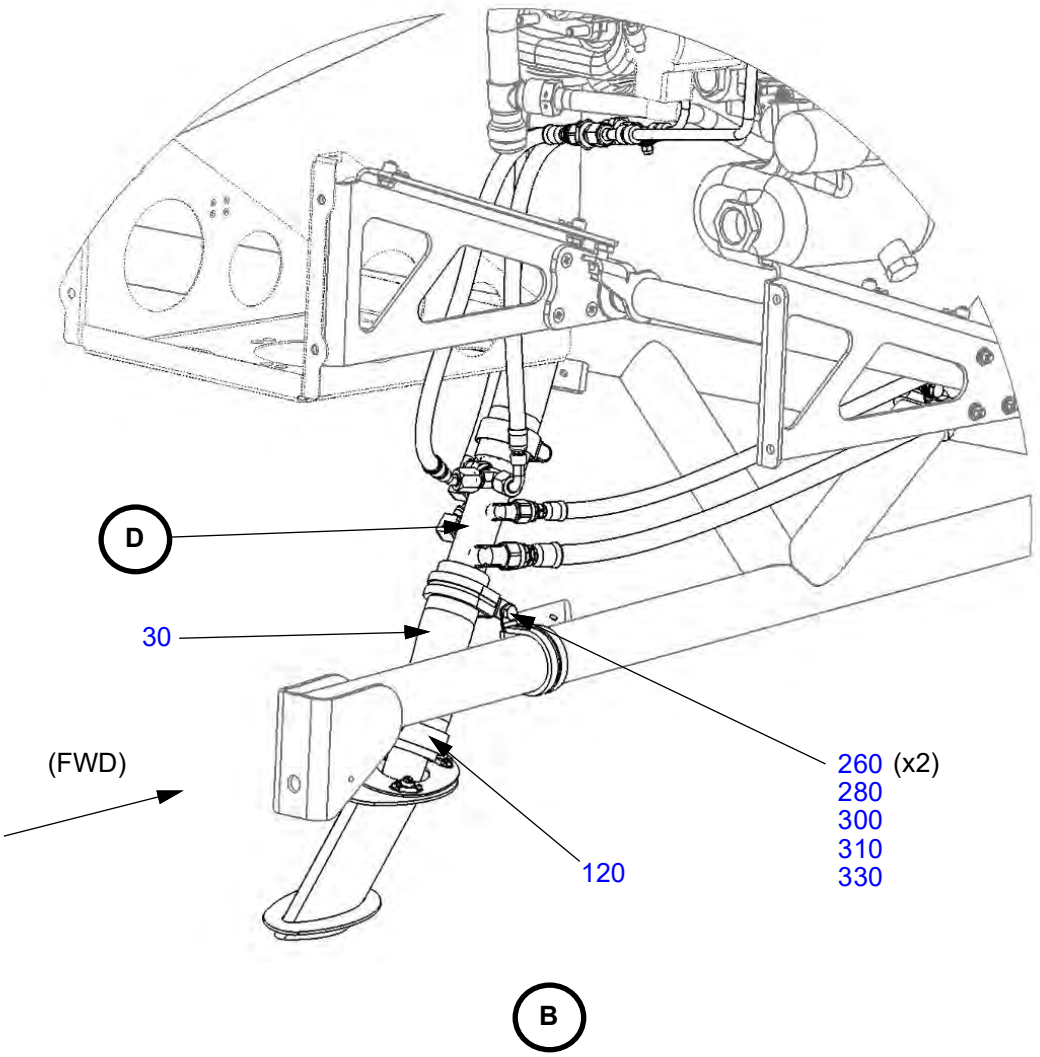

Figure 71-70.1: Engine Drains (Continued)

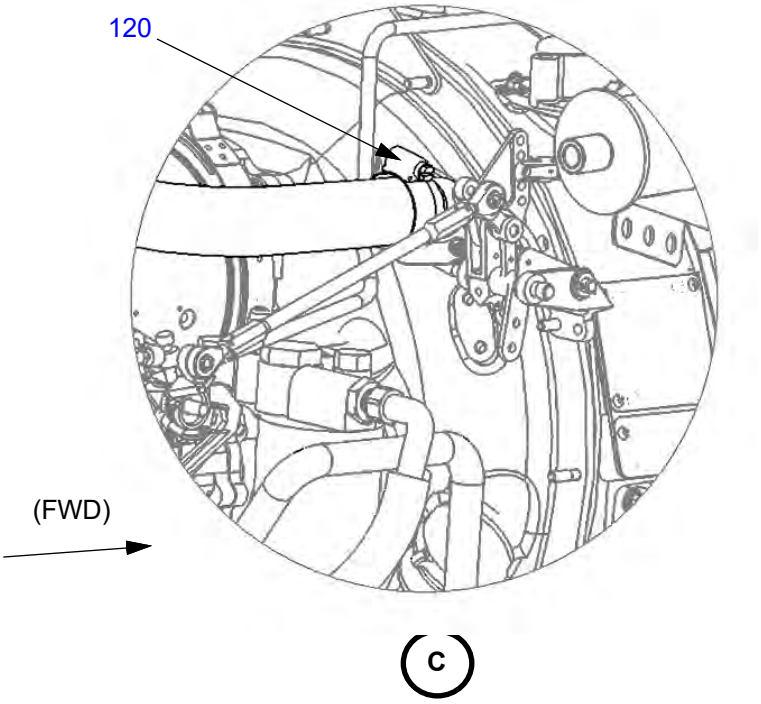

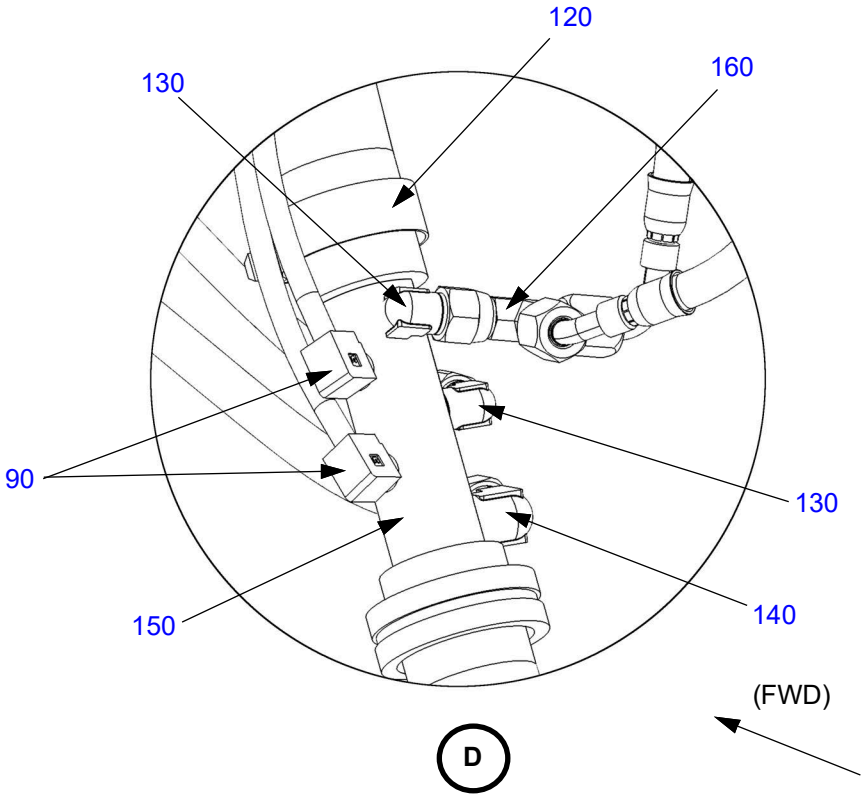

Figure 71-70.1: Engine Drains (Continued)

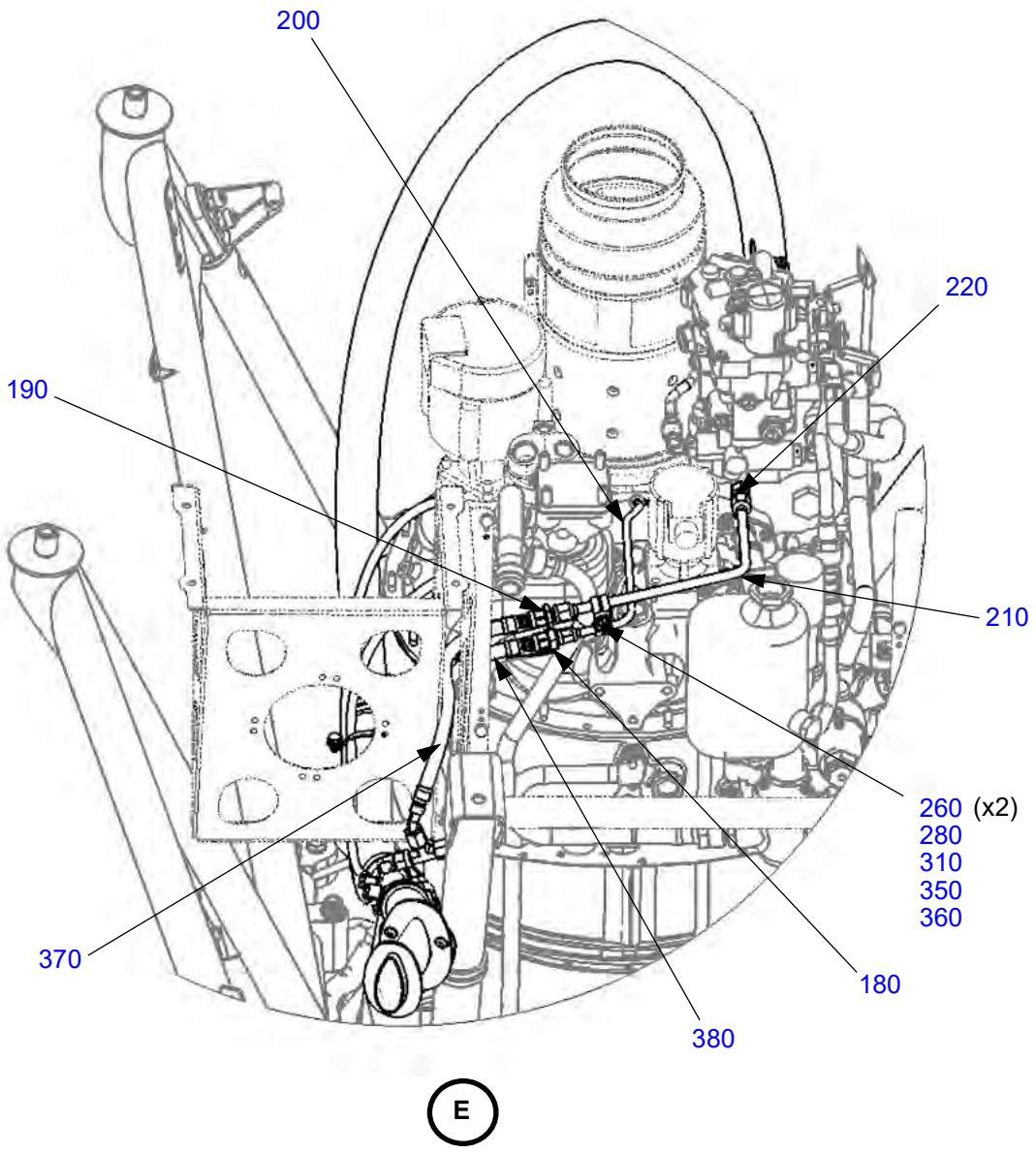

Table 71-70.1: Engine Drains

Figure Item Number	Part Number	Part Name	Effectivity Code	Amount in Assy.
10	4 V5OX-SS	Parker: Fitting, 45 Deg Elbow, SAE-ORB/ 37 Deg Flare	K003 and On	1
20	AE3663231E062 4 124K001-4CR-0624	Eaton/parker: Hose Assy, -4 x 62.5", Straight Fittings, Integral Chafe Sleeve	K003 and On	1
30	5526-100	Goodyear: Flexfab Silicone Hose	K003 and On	A/R
40	6 V6X-SS	Parker: Fitting, 45 Deg Elbow, Male - Female JIC	K003 and On	2
50	AK71700011	Tube Assy, Fwd Combustion Drain	K003 and On	1
60	AK71700012	Tube Assy, Aft Combustion Drain	K003 and On	1
70	AE3663231G0234/ 124K001-6CR-0234	Eaton/parker: Hose Assy, -6 x 23.5", Straight Fittings, Integral Chafe Sleeve	K003 and On	1
80	AS1035J060606	Fitting, Tee, Flared, 3/8" OD Tube	K003 and On	1
90	229-4-2	Parker: Fitting, Elbow, Push Connect To 1/ 8 NPT	K003 and On	2
100	229-4-4	Parker: Fitting, Elbow, Push Connect To 1/ 4 NPT	K003 and On	1
110	HU-4-0100	Parker: Tubing, Polyurethane, 1/4 OD	K003 and On	A/R
120	MS35842-12	Clamp, Hose	K003 and On	3
130	MS20822-4W, MS20822-4D	Elbow, Flared, Tube And Pipe Threads, 90°	K003 and On	2
140	MS20822-6W, MS20822-6D	Elbow, Flared, Tube And Pipe Threads, 90°	K003 and On	1
150	PK71700001	Manifold, Engine Drains	K003 and On	1
160	4 R6X-SS	Parker: 37 Deg Swivel Run Tee	K003 and On	1
170	28-4-10X32	Parker: Male Connector, 1/4 Tube OD, 10x32 Thread	K003 and On	1
180	AS5174W0403	Reducer - External Thread Flared Tube	K003 and On	1
190	AN815-4D	Union, Flared Tube, .250 Nominal Tube Size	K003 and On	1

Figure Item Number	Part Number	Part Name	Effectivity Code	Amount in Assy.
200	AK71700013	Tube Assy, Generator Drain	K003 and On	1
210	AK71700014	Tube Assy, Fuel Pump Drain	K003 and On	1
220	4 F5OX-SS	Parker: Fitting, Straight, SAE-ORB / 37 Deg Flare	K003 and On	1
230	AS21919WCJ06	Clamp, Loop Type, Cushioned, CRES, Ø .375	K003 and On	1
240	AN743-12	Bracket, Support, Clamp	K003 and On	1
250	NAS43DD3-40N	Spacer, Aluminum .214 ID x .312 OD x .625	K003 and On	1
260	NAS1149F0332P	Washer, Flat #10 x .032	K003 and On	9
270	AN3-10A	Bolt, 10-32 x 1-1/32" Undrilled	K003 and On	1
280	MS21042L3	Nut, Self-locking, 450°, Reduced #10-32	K003 and On	5
290	AS21919WCJ20	Clamp, Loop Type, Cushioned, CRES, Ø 1.250	K003 and On	1
300	AS21919WCJ22	Clamp, Loop Type, Cushioned, CRES, Ø 1.375	K003 and On	2
310	AN3-3A	Bolt, 10-32 x 15/32" Undrilled	K003 and On	3
320	AS21919WCJ08	Clamp, Loop Type, Cushioned, CRES, Ø .500	K003 and On	1
330	AS21919WCJ24	Clamp, Loop Type, Cushioned, CRES, Ø 1.500	K003 and On	2
340	AN3-4A	Bolt, 10-32 x 17/32" Undrilled	K003 and On	1
350	AS21919WCJ03	Clamp, Loop Type, Cushioned, CRES, Ø .188	K003 and On	1
360	AS21919WCJ04	Clamp, Loop Type, Cushioned, CRES, Ø .250	K003 and On	1
370	AE3663233E0124/ 124002K-4CR-0124	Eaton/parker: Hose Assy, -4 x 12.5", Straight To 90 Deg, Integral Chafe Sleeve	K003 and On	1
380	AE3663232E0130/ 124K003-4CR-0130	Eaton/parker: Hose Assy, -4 x 13.0", Straight To 45 Deg, Integral Chafe Sleeve	K003 and On	1

Figure 71-70.2: Overboard Drain

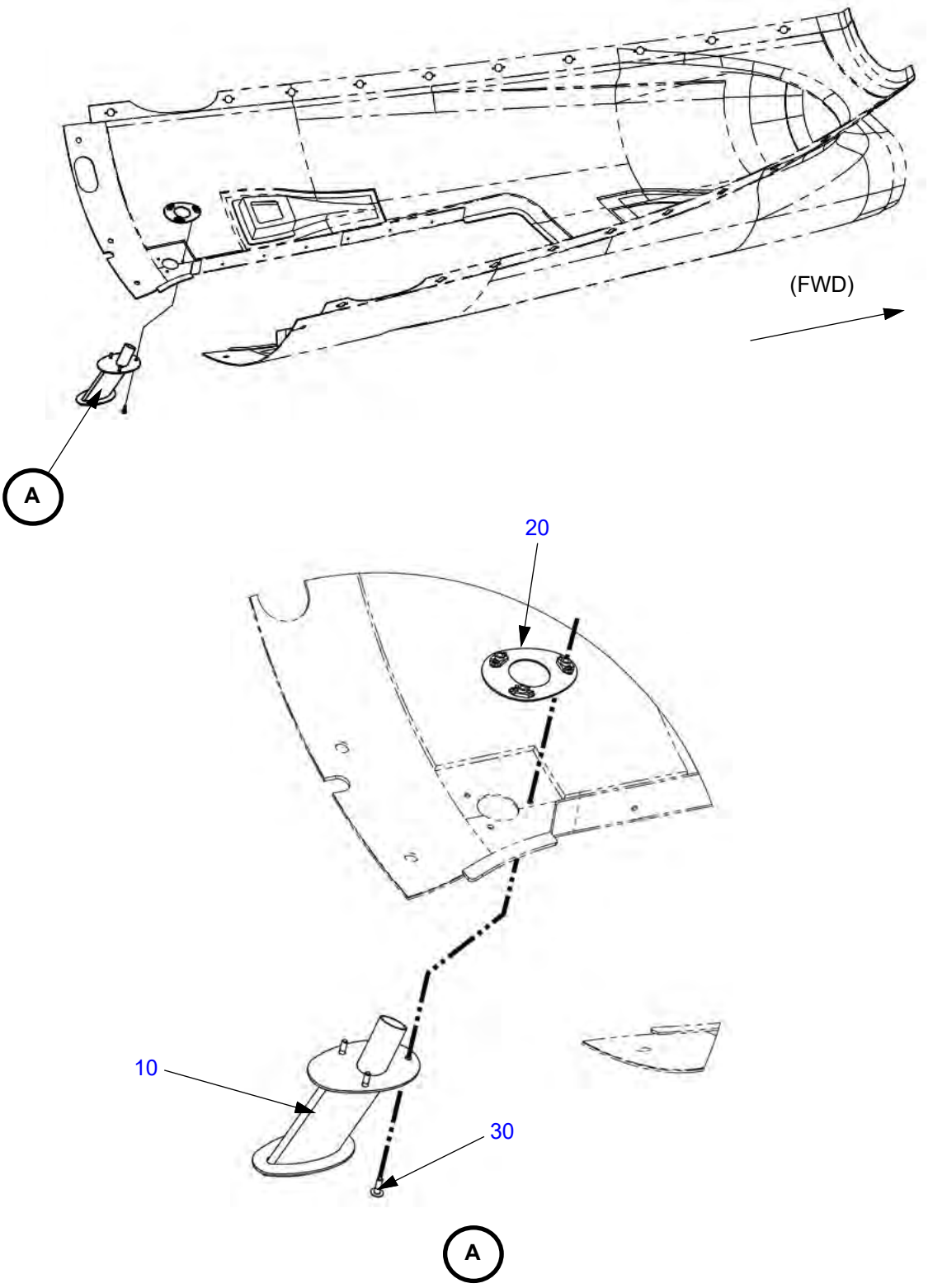

Table 71-70.2: Overboard Drain

Figure Item Number	Part Number	Part Name	Effectivity Code	Amount in Assy.
10	AK71700100	Weldment, Overboard Drain	K003 and On	1
20	AK71700002	Nutplate Asst, Overboard Drain	K003 and On	1
30	AN525-10R10	Screw, Washer Head, .190 x .625 Lg.	K003 and On	3

This Page Intentionally Left Blank

CHAPTER
74

Ignition

This Page Intentionally Left Blank

Table of Contents
and
List of Effective Pages

Chapter/Section	Page Number	Effective Date
74-Title	Page 1	03 Apr 2020
74-Title	Page 2	03 Apr 2020
74-LOEP	Page 1	03 Apr 2020
74-LOEP	Page 2	03 Apr 2020
74-TOC	Page 1	03 Apr 2020
74-TOC	Page 2	03 Apr 2020
Ignition Exciter		
74-10	Page 1	03 Apr 2020
74-10	Page 2	03 Apr 2020

This Page Intentionally Left Blank

CHAPTER 74

Table of Contents

List of Effective Pages ..... 74-LOEP / Page 1
Table of Contents ..... 74-TOC / Page1

Paragraph **Page Number**

Ignition Exciter

Figure 74-10.1: Ignition Exciter ..... 74-10 / Page 1
Table 74-10.1: Ignition Exciter ..... 74-10 / Page 2

This Page Intentionally Left Blank

IGNITION

Figure 74-10.1: Ignition Exciter

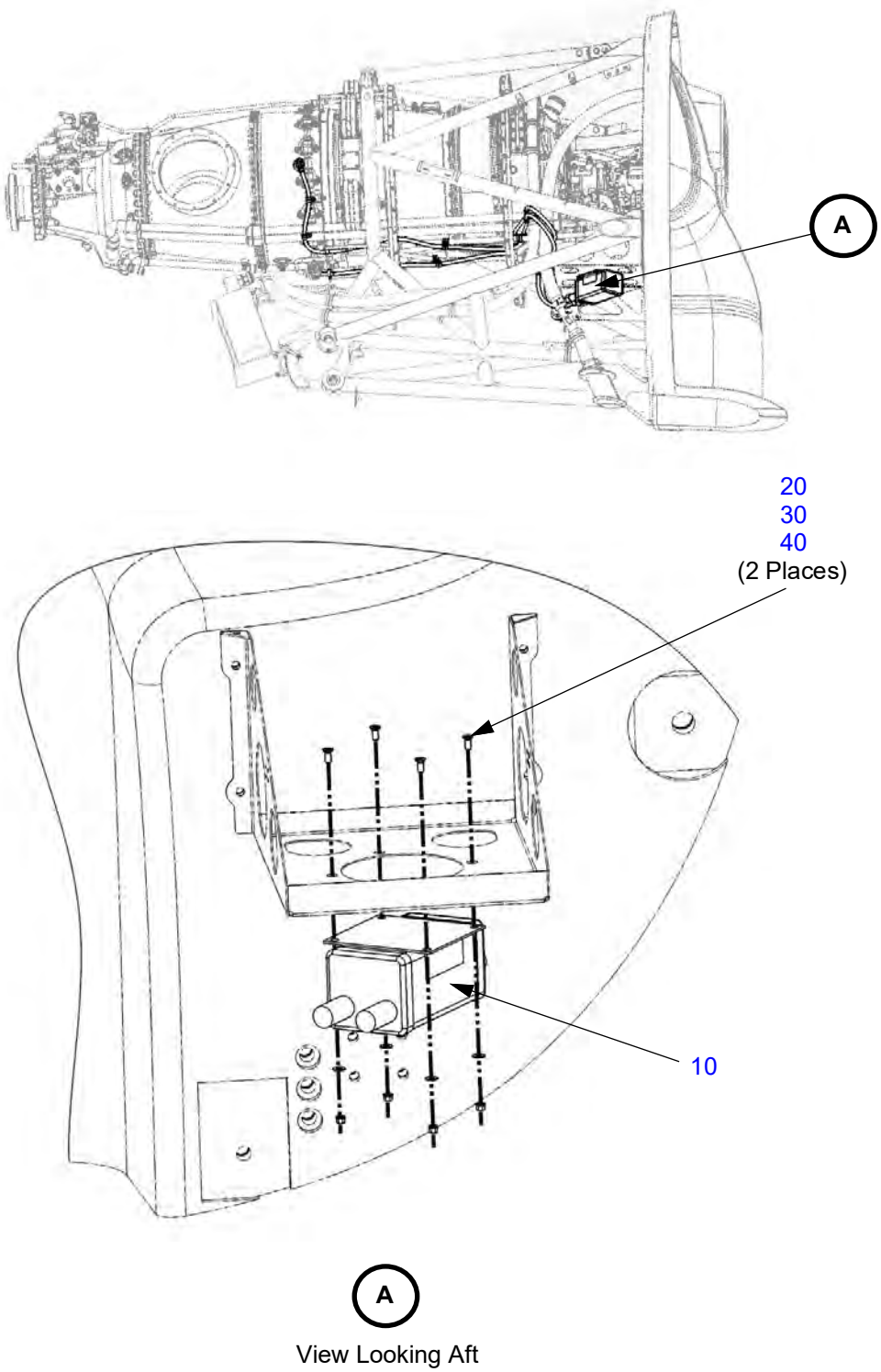

Table 74-10.1: Ignition Exciter

Figure Item Number	Part Number	Part Name	Effectivity Code	Amount in Assy.
10	10-381550-4 E	Unison: Ignition Exciter	K003 and On	1
20	MS24694-S3	Screw, Machine, C'sunk Ø .164 x 13/32	K003 and On	4
30	NAS1149FN832P	Washer, Flat #8 x .032	K003 and On	4
40	MS21042L08	Nut, Self-locking, 450°, Reduced #8-32	K003 and On	4

CHAPTER
76
Engine Controls

This Page Intentionally Left Blank

Table of Contents
and
List of Effective Pages

Chapter/Section	Page Number	Effective Date
76-Title	Page 1	03 Apr 2020
76-Title	Page 2	03 Apr 2020
76-LOEP	Page 1	13 Jan 2023
76-LOEP	Page 2	13 Jan 2023
76-TOC	Page 1	13 Jan 2023
76-TOC	Page 2	03 Apr 2020
	Power Control	
76-10	Page 1	13 Jan 2023
76-10	Page 2	13 Jan 2023
76-10	Page 3	13 Jan 2023
76-10	Page 4	13 Jan 2023
76-10	Page 5	13 Jan 2023
76-10	Page 6	13 Jan 2023
76-10	Page 7	13 Jan 2023
76-10	Page 8	13 Jan 2023
76-10	Page 9	13 Jan 2023
76-10	Page 10	13 Jan 2023
76-10	Page 11	13 Jan 2023
76-10	Page 12	13 Jan 2023
76-10	Page 13	13 Jan 2023
76-10	Page 14	13 Jan 2023
76-10	Page 15	13 Jan 2023
76-10	Page 16	13 Jan 2023
76-10	Page 17	13 Jan 2023
76-10	Page 18	13 Jan 2023
76-10	Page 19	13 Jan 2023
76-10	Page 20	13 Jan 2023
76-10	Page 21	13 Jan 2023
76-10	Page 22	13 Jan 2023
76-10	Page 23	13 Jan 2023
76-10	Page 24	13 Jan 2023
76-10	Page 25	13 Jan 2023
76-10	Page 26	13 Jan 2023
76-10	Page 27	13 Jan 2023
76-10	Page 28	13 Jan 2023
76-10	Page 29	13 Jan 2023

76-10 ..... Page 30 ..... 13 Jan 2023
76-10 ..... Page 31 ..... 13 Jan 2023
76-10 ..... Page 32 ..... 13 Jan 2023
76-10 ..... Page 33 ..... 13 Jan 2023
76-10 ..... Page 34 ..... 13 Jan 2023

CHAPTER 76

Table of Contents

List of Effective Pages ..... 76-LOEP / Page 1
Table of Contents ..... 76-TOC / Page1

Paragraph **Page Number**

Power Control
Figure 76-10.1: Power Quadrant ..... 76-10 / Page 1
Table 76-10.1: Power Quadrant ..... 76-10 / Page 3
Figure 76-10.2: Power Lever ..... 76-10 / Page 5
Table 76-10.2: Power Lever ..... 76-10 / Page 6
Figure 76-10.3: Propeller Lever ..... 76-10 / Page 7
Table 76-10.3: Propeller Lever ..... 76-10 / Page 8
Figure 76-10.4: Fuel Condition Lever ..... 76-10 / Page 9
Figure 76-10.4: Fuel Condition Lever ..... 76-10 / Page 9
Figure 76-10.5: Manual Override Lever ..... 76-10 / Page 12
Table 76-10.5: Manual Override Lever ..... 76-10 / Page 13
Figure 76-10.6: Propeller Slave Lever and Turnbuckle ..... 76-10 / Page 14
Table 76-10.6: Propeller Slave Lever and Turnbuckle ..... 76-10 / Page 16
Figure 76-10.7: Manual Override Lever Linkage Installation ..... 76-10 / Page 17
Table 76-10.7: Manual Override Lever Linkage Installation ..... 76-10 / Page 18
Figure 76-10.8: Power Cable - FCU Connection ..... 76-10 / Page 19
Table 76-10.8: Power Cable - FCU Connection ..... 76-10 / Page 20
Figure 76-10.9: Fuel Condition Cable - FCU Connection ..... 76-10 / Page 21
Figure 76-10.9: Fuel Condition Cable - FCU Connection ..... 76-10 / Page 21
Figure 76-10.10: Manual Override - FCU Connection ..... 76-10 / Page 23
Table 76-10.10: Manual Override - FCU Connection ..... 76-10 / Page 24
Figure 76-10.11: Engine Control Cables - Quadrant to Bulkhead ..... 76-10 / Page 25
Table 76-10.11: Engine Control Cables - Quadrant to Bulkhead ..... 76-10 / Page 27
Figure 76-10.12: Engine Control Cables - Bulkhead to FCU ..... 76-10 / Page 28
Table 76-10.12: Engine Control Cables - Bulkhead to FCU ..... 76-10 / Page 30
Figure 76-10.13: Propeller Cable - FCU to Propeller Governor ..... 76-10 / Page 31
Table 76-10.13: Propeller Cable - FCU to Propeller Governor ..... 76-10 / Page 33

This Page Intentionally Left Blank

POWER CONTROL

Figure 76-10.1: Power Quadrant

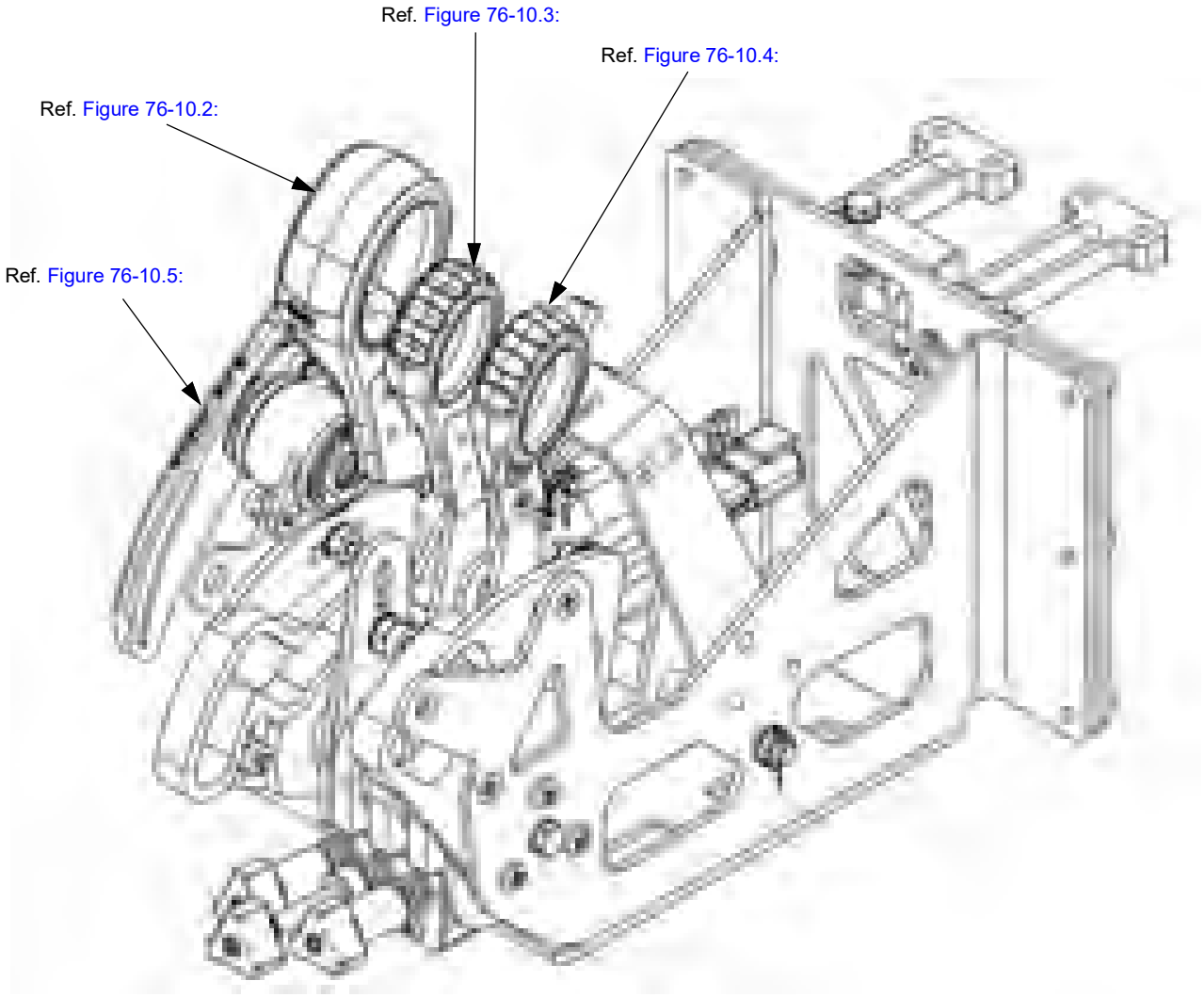

Figure 76-10.1: Power Quadrant (Continued)

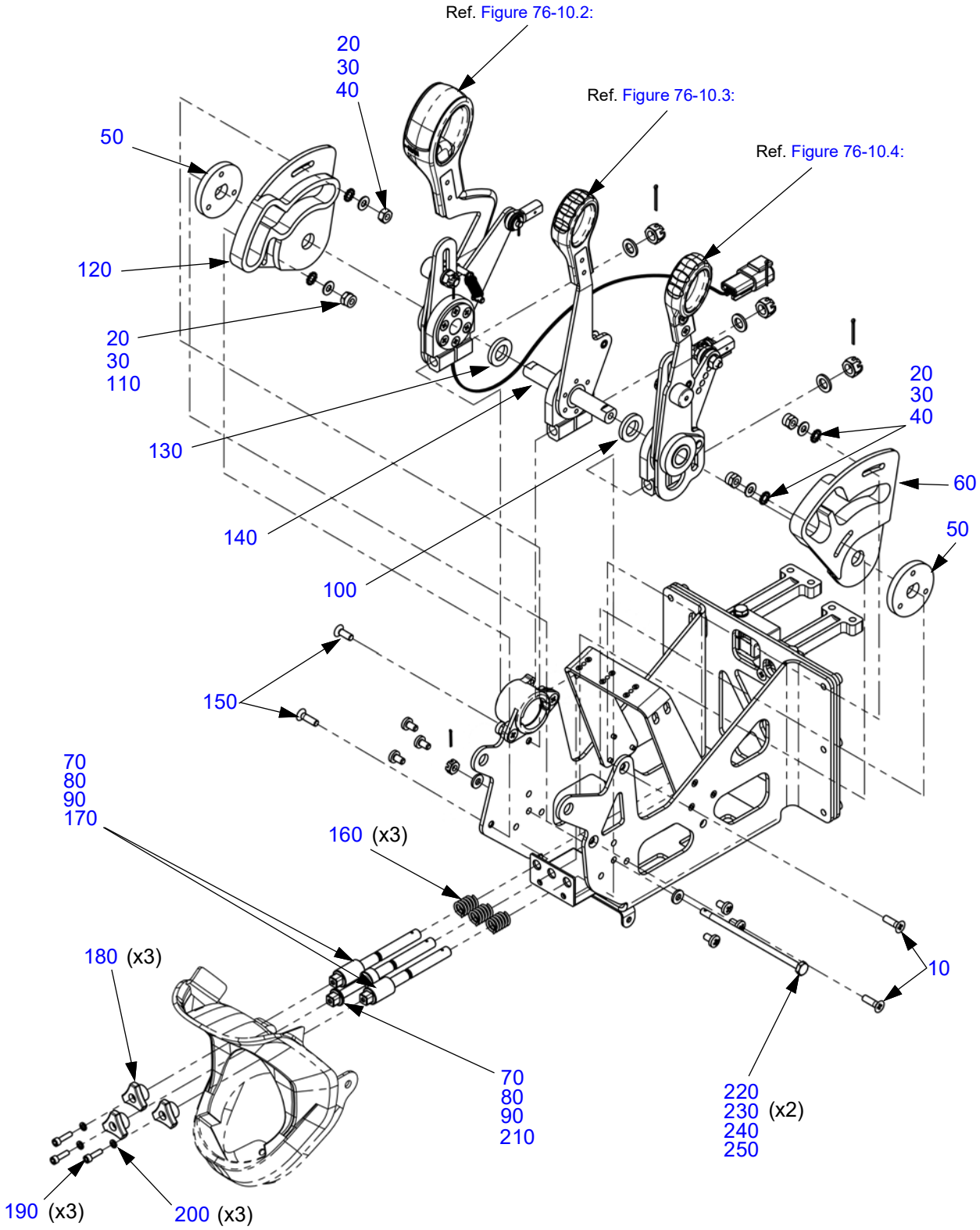

Table 76-10.1: Power Quadrant

Figure Item Number	Part Number	Part Name	Effectivity Code	Amount in Assy.
10	MS24694-S52	Screw, Machine, C'sunk Ø .190 x 21/32	K003 and On	3
20	MS35335-32	Washer, Lock, Flat-external Tooth, Ø.190	K003 and On	4
30	NAS1149F0332P	Washer, Flat #10 x .032	K003 and On	6
40	MS21044N3	Nut, Self-locking, Steel 10-32	K003 and On	3
50	PK76001007	Shim, Locking, Shaft, Power Quad	K003 and On	2
60	PK76001001	Gate, Right, Fuel Cond, Lever, Power Quad	K003 and On	1
70	AN310-5	Nut, Castellated, Steel 5/16-24	K003 and On	3
80	NAS1149F0563P	Washer, Flat 5/16 x .063	K003 and On	4
90	MS24665-134	Pin, Cotter, Cad Steel Ø .062 x .75	K003 and On	3
100	PK76001008	Bushing, Thin, Shaft, Power Quad	K003 and On	1
110	MS21083N3	Nut, Self-locking, Non-metallic Insert 10-32	K003 and On	1
120	PK76001002	Gate, Left, Power, Lever, Power Quad	K003 and On	1
130	PK76001004	Bushing, Shaft, Power Quad	K003 and On	1
140	PK76001003	Shaft, Control, Lever, Power Quad	K003 and On	1
150	MS24694-S50	Screw, Machine, C'sunk Ø .190 x 17/32	K003 and On	1
160	PK99002006	Spring, Compression, Mw, Zp, .480 O.D. x .354 ID x .063 Wire Dia	K003 and On	3
170	PK76001013	Arm, Short, Friction Lock, Power Quad	K003 and On	2
180	PK76001015	Nob, Friction Assist, Power Quadrant	K003 and On	3
190	NAS1352N-06-8B	Screw, Socket Head Cap, Heat Resistant, Black Oxide .138-32 x .500	K003 and On	3
200	MS35338-136	Washer, Lock-spring, Cres, Ø.138	K003 and On	3

210	PK76001014	Arm, Long, Friction Lock, Power Quad	K003 and On	1
220	AN3-41	Bolt, 10-32 x 4-5/32" Drilled Shank	K003 and On	1
230	NAS1149F0363P	Washer, Flat #10 x .063	K003 and On	2
240	AN320-3	Nut, Castellated, Shear, Steel 3/16-28	K003 and On	1
250	MS24665-69	Pin, Cotter, Cad Steel Ø .047 x .50	K003 and On	1

Figure 76-10.2: Power Lever

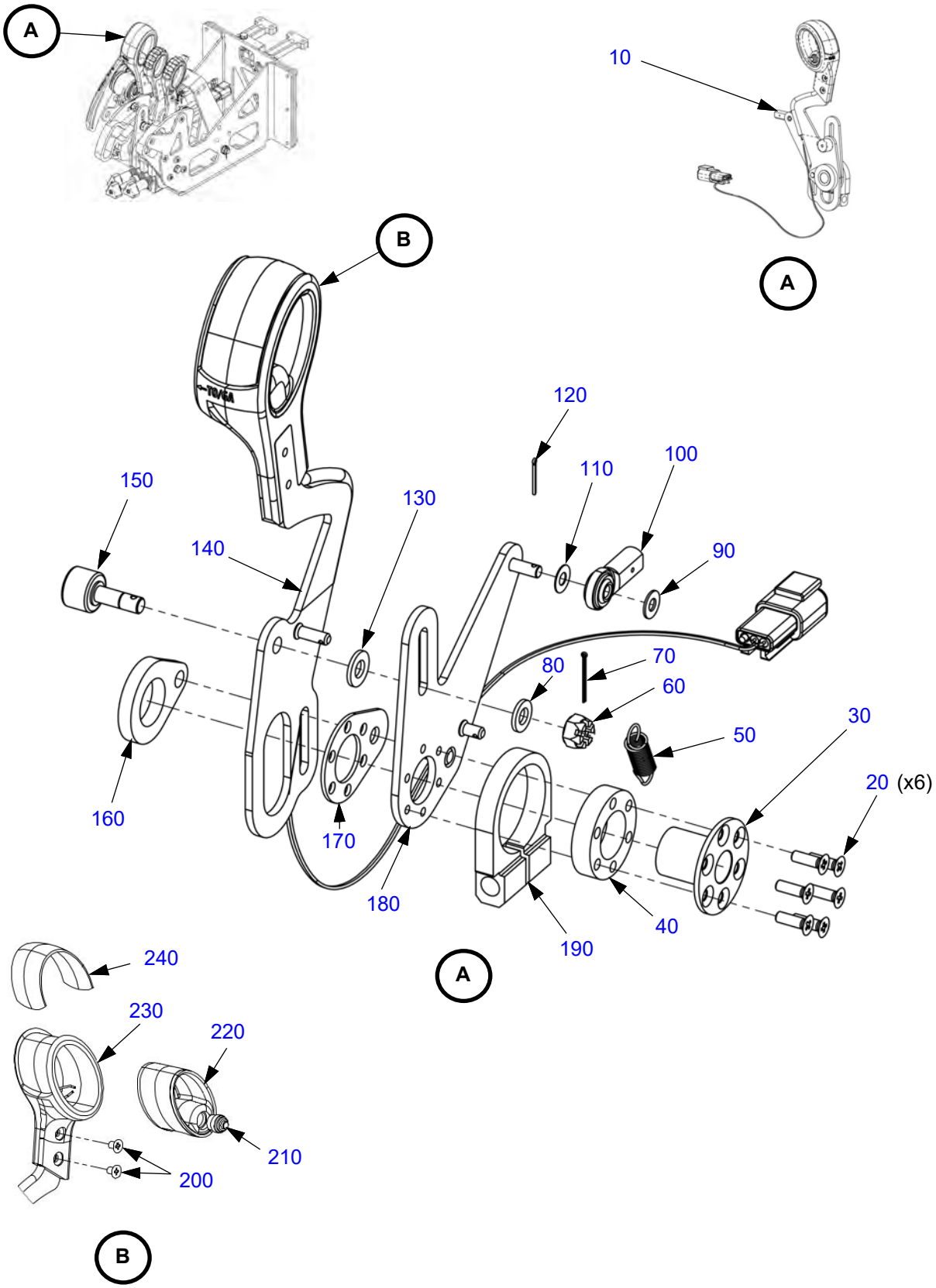

Table 76-10.2: Power Lever

Figure Item Number	Part Number	Part Name	Effectivity Code	Amount in Assy.
10	AK76101000	Assy, Lever, Power, Power Quad	K003 and On	1
20	MS24694-S5	Screw, Machine, C'sunk Ø .164 x 17/32	K003 and On	6
30	PK76100002	Bushing, Lever, Power Quad	K003 and On	1
40	PK76100001	Bushing, Friction Lock, Power Quad	K003 and On	1
50	MS24586-598	Extension Spring	K003 and On	1
60	MS17825-4	Nut, Self Locking, 250ºf, Castellated, Steel 1/4-28	K003 and On	1
70	MS24665-71	Pin, Cotter, Cad Steel Ø .047 x .75	K003 and On	1
80	NAS1149F0463P	Washer, Flat 1/4 x .063	K003 and On	1
90	NAS1149F0332P	Washer, Flat #10 x .032	K003 and On	1
100	PK99002001	Rod End, Female, Dia .190 Bore, .190-32 UNF-2B RH Thd	K003 and On	1
110	NAS1149F0316P	Washer, Flat #10 x .016	K003 and On	1
120	MS24665-69	Pin, Cotter, Cad Steel Ø .047 x .50	K003 and On	1
130	MS51859-17	Washer, Flat-plastic (Nylon)	K003 and On	1
140	AK76101100	Weld Assy, Lever, Power, Power Quad	K003 and On	1
150	AK76100010	Mod, Cam Follower, .625 O.D. x 1.22 Lg x .75 Grip, .250-28 Unf	K003 and On	1
160	PK76100008	Bushing, Outboard, Lever, Power Quad	K003 and On	1
170	PK76100009	Bushing, Inboard, Lever, Power Quad	K003 and On	1
180	AK76101200	Weld Assy, Lever, Slave, Power, Power Quad	K003 and On	1
190	PK76100003	Housing, Friction Lock, Power Quad	K003 and On	1
200	MS24693-46B	Screw, Machine, C'sunk, Blk Oxide Ø .164 x 0.250	K003 and On	2
210	P7-1A1122	Switch, No, Spst, Mom-Tac, 5a, Blk/Blk	K003 and On	1
220	PK76101002	Insert, Handle, Lever, Power, Power Quad	K003 and On	1
230	PK76101001	Handle, Lever, Power, Power Quad	K003 and On	1
240	AK76101001	Assy, Wrapped Insert, Power And Throttle	K003 and On	1

Figure 76-10.3: Propeller Lever

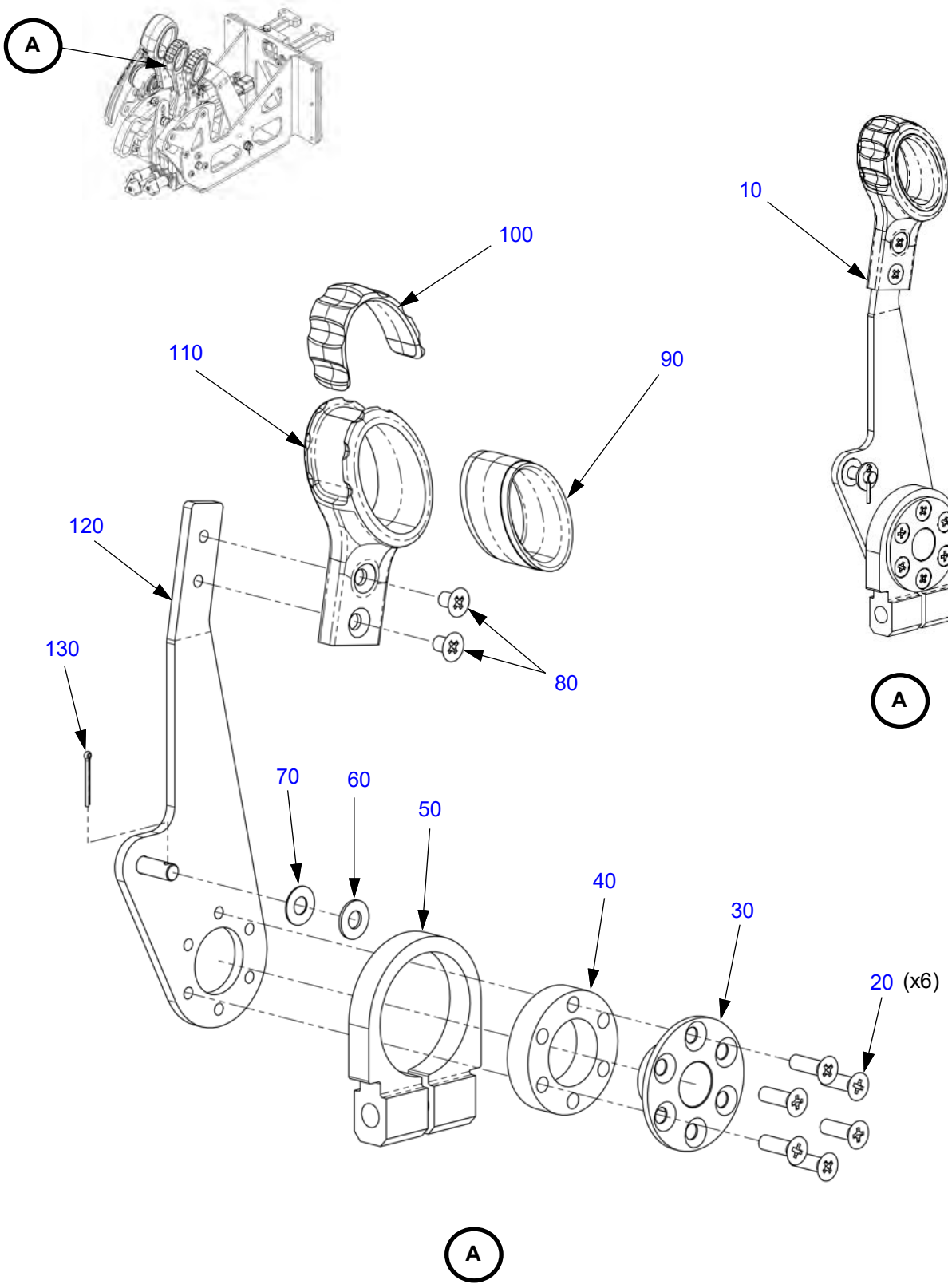

Table 76-10.3: Propeller Lever

Figure Item Number	Part Number	Part Name	Effectivity Code	Amount in Assy.
10	AK76102000	Assy, Lever, Prop, Power Quad	K003 and On	1
20	MS24694-S5	Screw, Machine, C'sunk Ø .164 x 17/32	K003 and On	6
30	PK76102003	Bushing, Lever, Prop, Power Quad	K003 and On	1
40	PK76100001	Bushing, Friction Lock, Power Quad	K003 and On	1
50	PK76100003	Housing, Friction Lock, Power Quad	K003 and On	1
60	NAS1149F0332P	Washer, Flat #10 x .032	K003 and On	1
70	NAS1149F0316P	Washer, Flat #10 x .016	K003 and On	1
80	MS24693-46B	Screw, Machine, C'sunk, Blk Oxide Ø .164 x 0.250	K003 and On	2
90	PK76102002	Insert, Handle, Lever, Prop, Power Quad	K003 and On	1
100	PK76102004	Mohawk, Lever, Prop, Throttle Quad	K003 and On	1
110	PK76102001	Handle, Lever, Prop, Power Quad	K003 and On	1
120	AK76102100	Weld Assy, Lever, Prop, Power Quad	K003 and On	1
130	MS24665-69	Pin, Cotter, Cad Steel Ø .047 x .50	K003 and On	1

Figure 76-10.4: Fuel Condition Lever

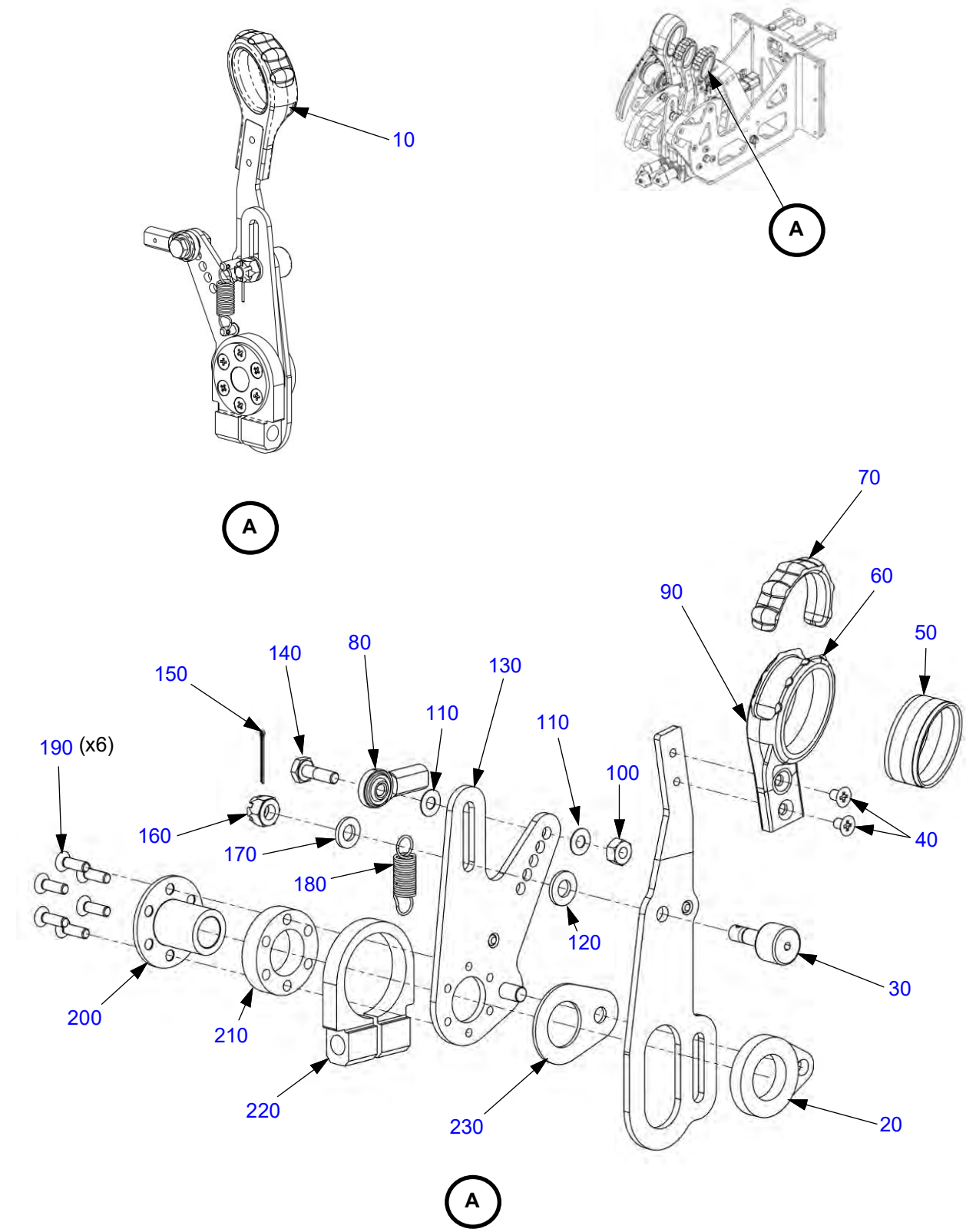

Table 76-10.4: Fuel Condition Lever

Figure Item Number	Part Number	Part Name	Effectivity Code	Amount in Assy.
10	AK76104000	Assy, Lever, Fuel Cond, Power Quad	K003 and On	1
20	PK76100008	Bushing, Outboard, Lever, Power Quad	K003 and On	1
30	AK76100010	Mod, Cam Follower, .625 O.D. x 1.22 Lg x .75 Grip, .250-28 Unf	K003 and On	2
40	MS24693-46B	Screw, Machine, C'sunk, Blk Oxide Ø .164 x 0.250	K003 and On	1
50	PK76104002	Insert, Handle, Fuel Cond, Power, Power Quad	K003 and On	1
60	PK76104001	Handle, Lever, Fuel Condition, Power Quad	K003 and On	1
70	PK76104003	Mohawk, Lever, Fuel Cond, Throttle Quad	K003 and On	1
80	PK99002001	Rod End, Female, Dia .190 Bore, .190-32 UNF-2B RH Thd	K003 and On	1
90	AK76104100	Weld Assy, Lever, Fuel Cond, Power Quad	K003 and On	1
100	MS21083N3	Nut, Self-locking, Non-metallic Insert 10-32	K003 and On	1
110	NAS1149F0316P	Washer, Flat #10 x .016	K003 and On	2
120	MS51859-17	Washer, Flat-plastic (Nylon)	K003 and On	1
130	AK76104200	Weld Assy, Lever, Slave, Fuel Cond, Power Quad	K003 and On	1
140	AN3-6A	Bolt, 10-32 x 25/32" Undrilled	K003 and On	1
150	MS24665-71	Pin, Cotter, Cad Steel Ø .047 x .75	K003 and On	1
160	MS17825-4	Nut, Self Locking, 250°f, Castellated, Steel 1/4-28	K003 and On	1
170	NAS1149F0463P	Washer, Flat 1/4 x .063	K003 and On	1

180	MS24586-598	Extension Spring	K003 and On	1
190	MS24694-S5	Screw, Machine, C'sunk Ø .164 x 17/32	K003 and On	6
200	PK76100002	Bushing, Lever, Power Quad	K003 and On	1
210	PK76100001	Bushing, Friction Lock, Power Quad	K003 and On	1
220	PK76100003	Housing, Friction Lock, Power Quad	K003 and On	1
230	PK76100009	Bushing, Inboard, Lever, Power Quad	K003 and On	1

Figure 76-10.5: Manual Override Lever

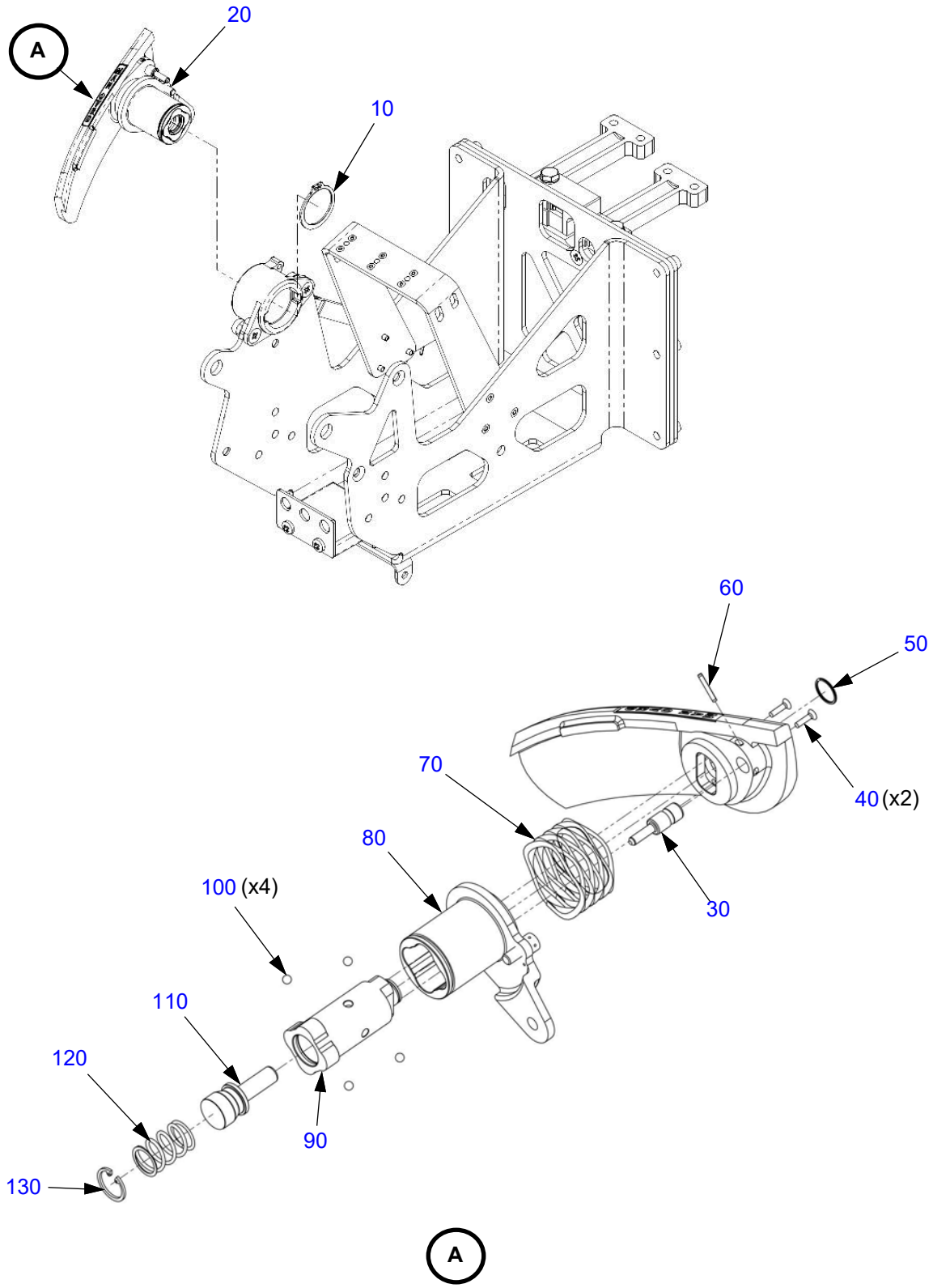

Table 76-10.5: Manual Override Lever

Figure Item Number	Part Number	Part Name	Effectivity Code	Amount in Assy.
10	MS16624-1100	Retaining Ring, External, Ø1.000 Shaft	K003 and On	1
20	AK76200000	Assy, FCU Override, Power Quad	K003 and On	1
30	PK76200004	Pin, FCU, Lever, Power Quad	K003 and On	1
40	MS51959-4	Screw, Machine, Countersunk, 82°, Cres, #2-56 UNC-2A	K003 and On	2
50	PK99007054	Retaining Ring	K003 and On	1
60	MS16562-5	Pin, Spring Ø .062 x 0.438	K003 and On	1
70	PK99006013	Compression Spring	K003 and On	1
80	AK76201000	Assy, FCU Release, Power Quad	K003 and On	1
90	PK76200002	Key, FCU Release, Power Quad	K003 and On	1
100	MS19060-308	Balls, Bearing, Corrosion Resistant Steel	K003 and On	4
110	PK76200001	Plunger, FCU Release, Power Quad	K003 and On	1
120	PK99006014	Compression Spring	K003 and On	1
130	MS16625-1050	Ring, Retaining, Internal Ø .500 x .035	K003 and On	1

Figure 76-10.6: Propeller Slave Lever and Turnbuckle

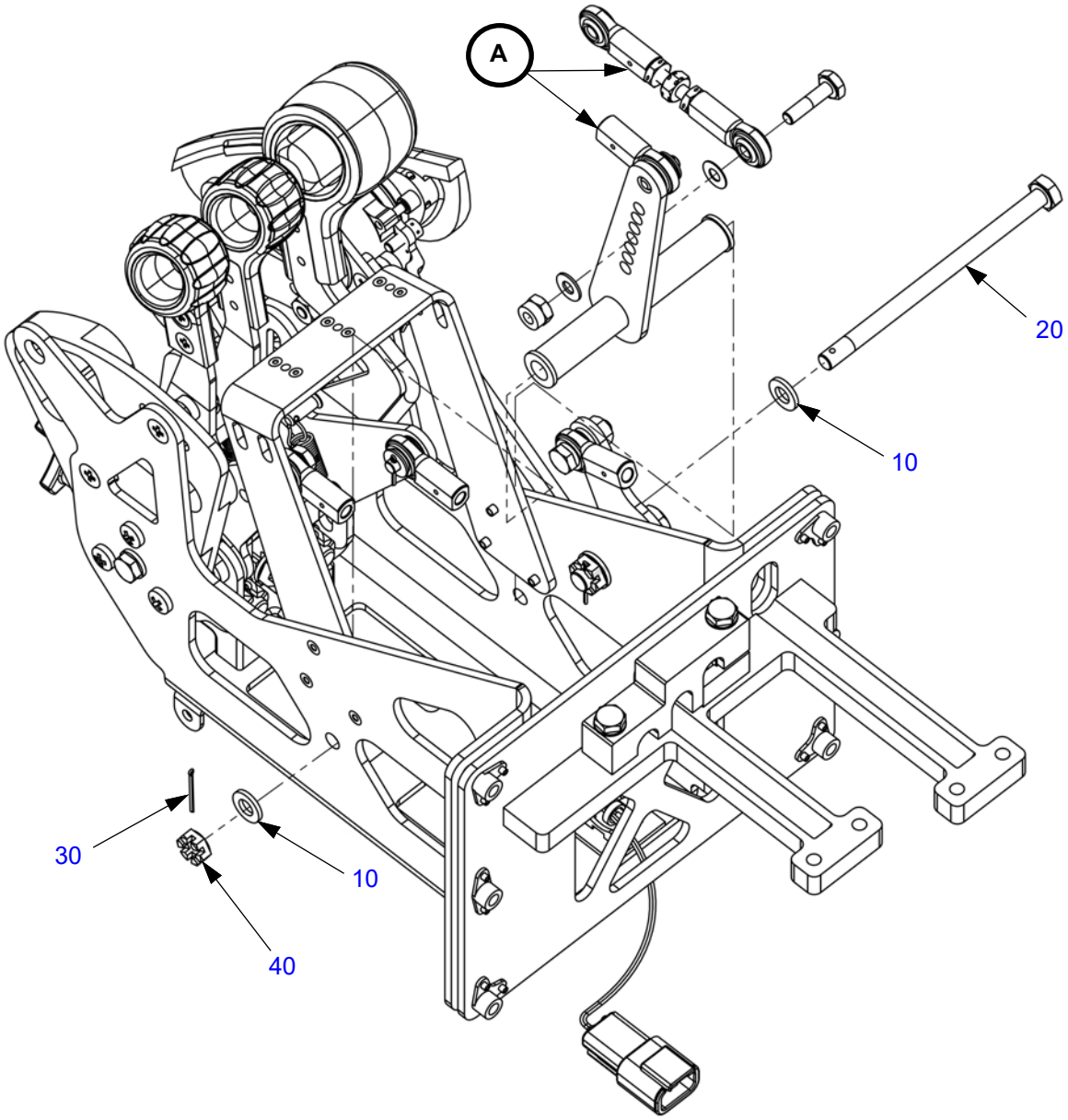

Figure 76-10.6: Propeller Slave Lever and Turnbuckle (Continued))

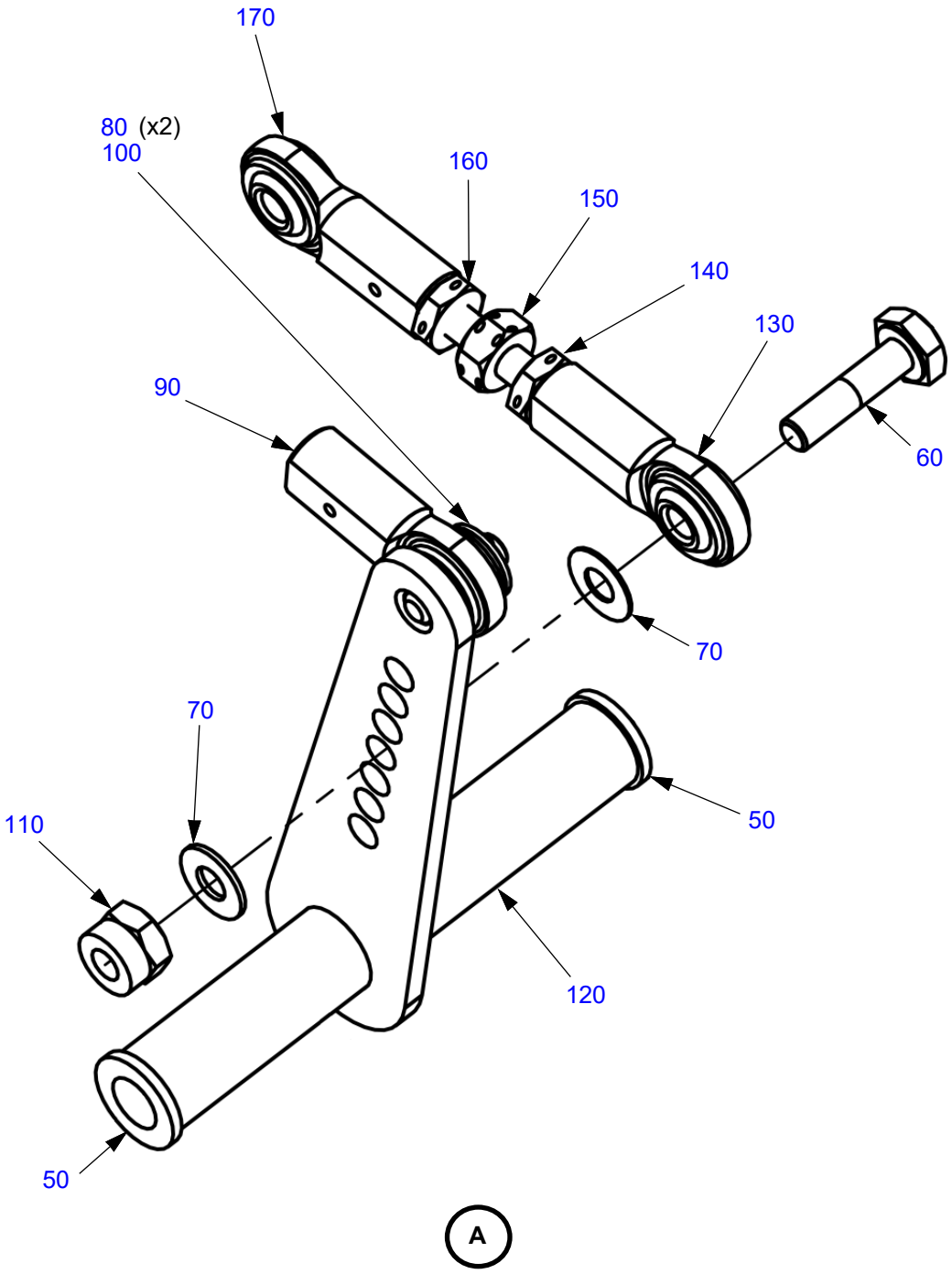

Table 76-10.6: Propeller Slave Lever and Turnbuckle

Figure Item Number	Part Number	Part Name	Effectivity Code	Amount in Assy.
10	NAS1149F0463P	Washer, Flat 1/4 x .063	K003 and On	2
20	AN4-41	Bolt, 1/4-28 x 4-5/32" Drilled Shank	K003 and On	1
30	MS24665-71	Pin, Cotter, Cad Steel Ø .047 x .75	K003 and On	1
40	AN320-4	Nut, Castellated, Shear, Steel 1/4-28	K003 and On	1
50	NAS77A4-25	Bushing, Flanged .250 I.D. x .376 O.D. x 0.250 Grip	K003 and On	2
60	AN3-6A	Bolt, 10-32 x 25/32" Undrilled	K003 and On	1
70	NAS1149F0316P	Washer, Flat #10 x .016	K003 and On	2
80	NAS1149F0332P	Washer, Flat #10 x .032	K003 and On	2
90	PK99002001	Rod End, Female, Dia .190 Bore, .190-32 UNF-2B RH Thd	K003 and On	1
100	MS24665-69	Pin, Cotter, Cad Steel Ø .047 x .50	K003 and On	1
110	MS21044N3	Nut, Self-locking, Steel 10-32	K003 and On	1
120	AK76103100	Weld Assy, Lever, Slave, Prop, Power Quad	K003 and On	1
130	PK99002001	Rod End, Female, Dia .190 Bore, .190-32 UNF-2B RH Thd	K003 and On	1
140	NAS1423-3	Nut, Jam, Drilled, Cad Steel .190-32	K003 and On	1
150	PK76001011	Rod, Turnbuckle, Lever, Slave, Prop, Power Quad	K003 and On	1
160	NAS1423-3L	Nut, Jam, Drilled, Cad Steel .190-32 LH	K003 and On	1
170	PK99002005	Rod End, Female, Dia .190 Bore, .190-32 UNF-2B LH Thd	K003 and On	1

Figure 76-10.7: Manual Override Lever Linkage Installation

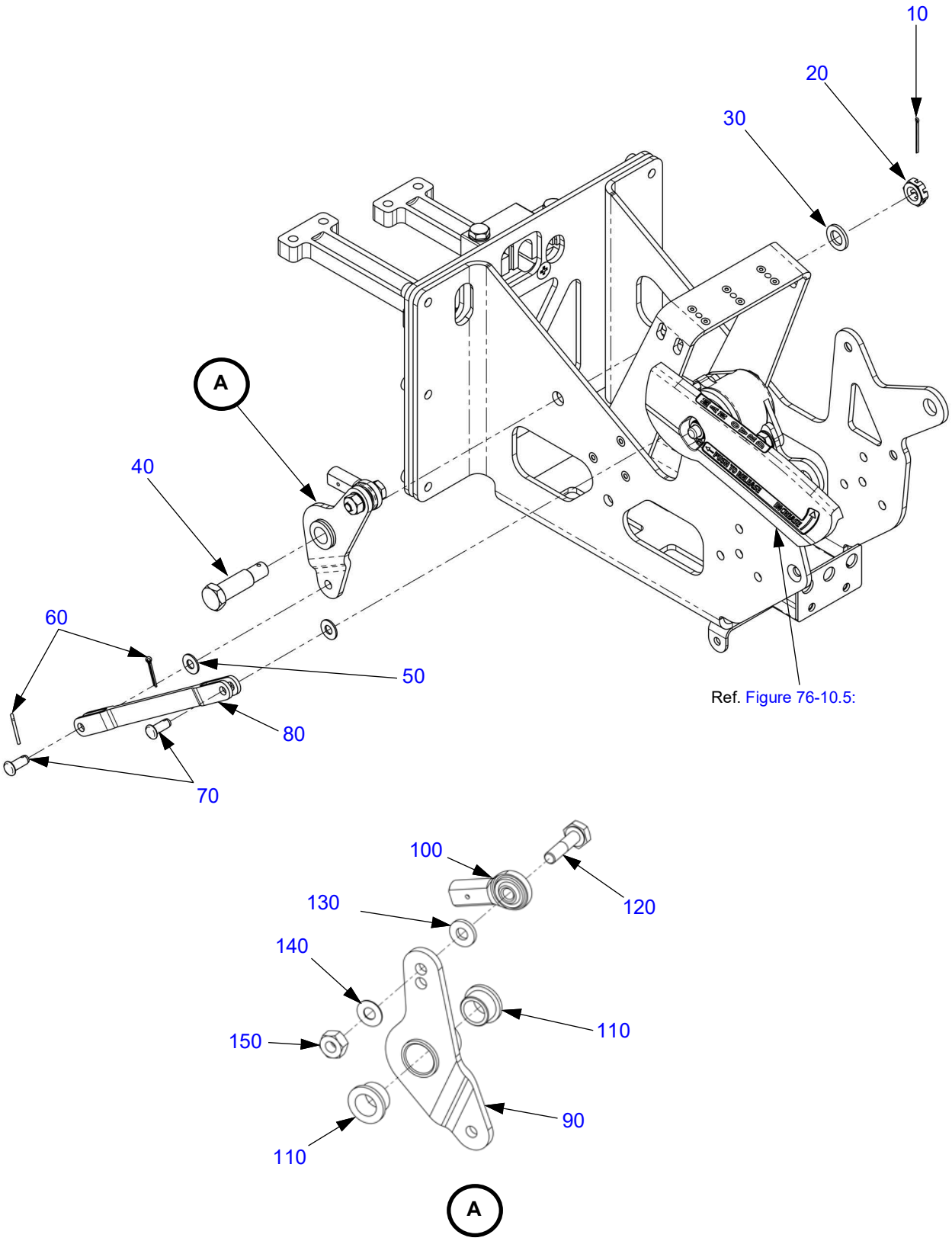

Table 76-10.7: Manual Override Lever Linkage Installation

Figure Item Number	Part Number	Part Name	Effectivity Code	Amount in Assy.
10	MS24665-71	Pin, Cotter, Cad Steel Ø .047 x .75	K003 and On	1
20	AN320-5	Nut, Castellated, Shear, Steel 5/16-24	K003 and On	1
30	NAS1149F0563P	Washer, Flat 5/16 x .063	K003 and On	1
40	PK76001016	Bolt, Pivot, Bellcrank, FCU Override, Power Quad	K003 and On	1
50	NAS1149F0332P	Washer, Flat #10 x .032	K003 and On	2
60	MS24665-132	Pin, Cotter, Cad Steel Ø .062 x .50	K003 and On	2
70	MS20392-2C11	Pin, Drilled Shank Ø .188 x 0.516	K003 and On	2
80	PK76001010	Link, FCU Override, Power Quad	K003 and On	1
90	AK76203000	Weld Assy, Bellcrank, FCU Override, Power Quad	K003 and On	1
100	PK99002001	Rod End, Female, Dia .190 Bore, .190-32 UNF-2B RH Thd	K003 and On	1
110	NAS77A6-025	Bushing, Flanged .375 I.D. x .501 O.D. x 0.250 Grip	K003 and On	2
120	AN3-6A	Bolt, 10-32 x 25/32" Undrilled	K003 and On	1
130	NAS1149F0363P	Washer, Flat #10 x .063	K003 and On	1
140	NAS1149F0316P	Washer, Flat #10 x .016	K003 and On	1
150	MS21083N3	Nut, Self-locking, Non-Metalic Insert 10-32	K003 and On	1

Figure 76-10.8: Power Cable - FCU Connection

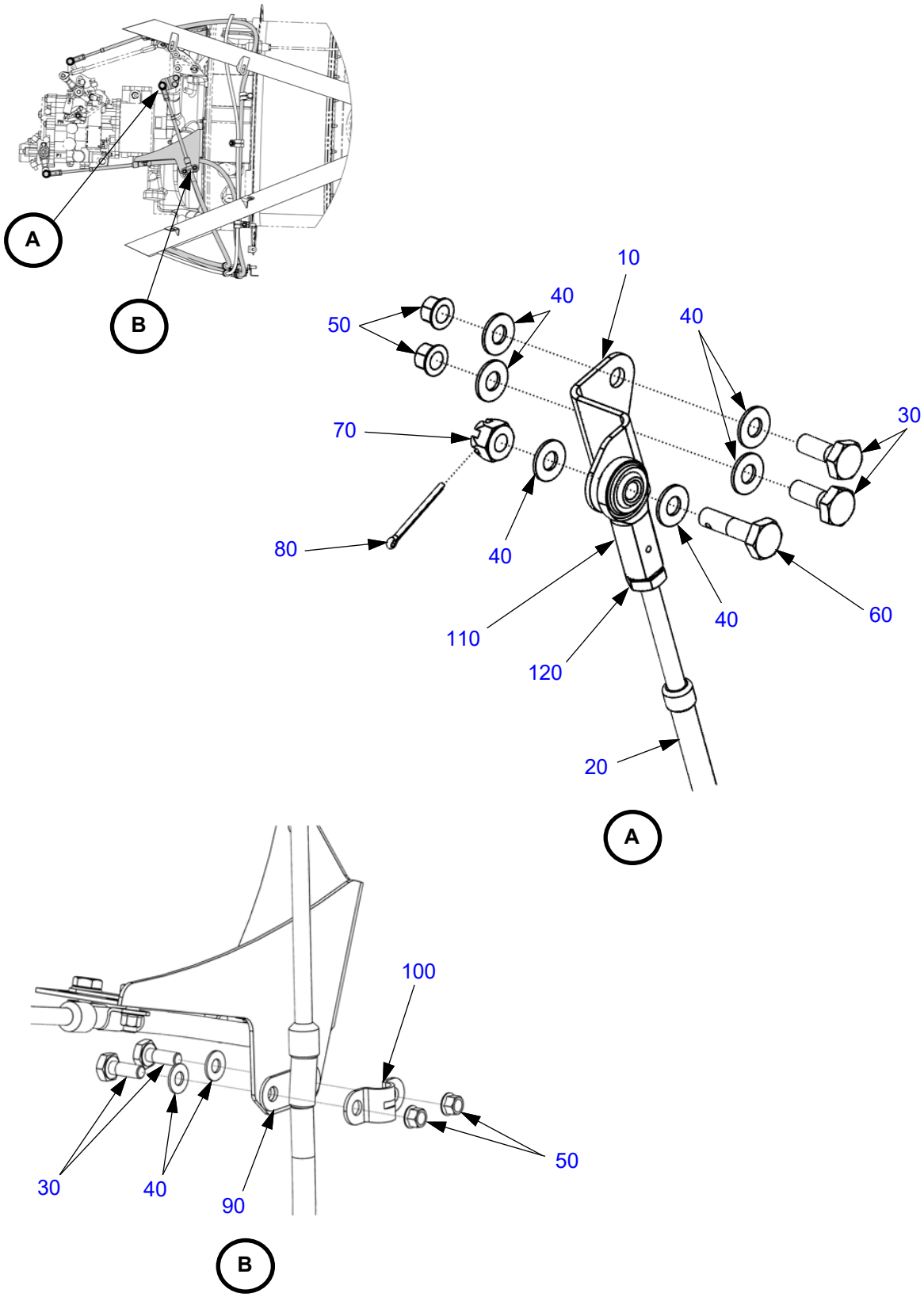

Table 76-10.8: Power Cable - FCU Connection

Figure Item Number	Part Number	Part Name	Effectivity Code	Amount in Assy.
10	PK76000002	Bracket, Upper, Turbine Power Cable	K003 and On	1
20	PK99003006	Turbine Power Cable	K003 and On	1
30	AN3-4A	Bolt, 10-32 x 17/32" Undrilled	K003 and On	4
40	NAS1149F0332P	Washer, Flat #10 x .032	K003 and On	8
50	MS21042L3	Nut, Self-locking, 450°, Reduced #10-32	K003 and On	4
60	AN3-6	Bolt, 10-32 x 25/32" Drilled Shank	K003 and On	1
70	AN310-3	Nut, Castellated, Steel 10-32	K003 and On	1
80	MS24665-134	Pin, Cotter, Cad Steel Ø .062 x .75	K003 and On	1
90	PK76000005	Clamp, Cable, Push/Pull Lower	K003 and On	1
100	PK76000004	Clamp, Cable, Push/Pull Upper	K003 and On	1
110	PK99002001	Rod End, Female, Dia .190 Bore, .190-32 UNF-2B RH Thd	K003 and On	1
120	AN315-3R	Nut, Plain, Hexagon, Airframe, 10-32, RH Thread	K003 and On	1

Figure 76-10.9: Fuel Condition Cable - FCU Connection

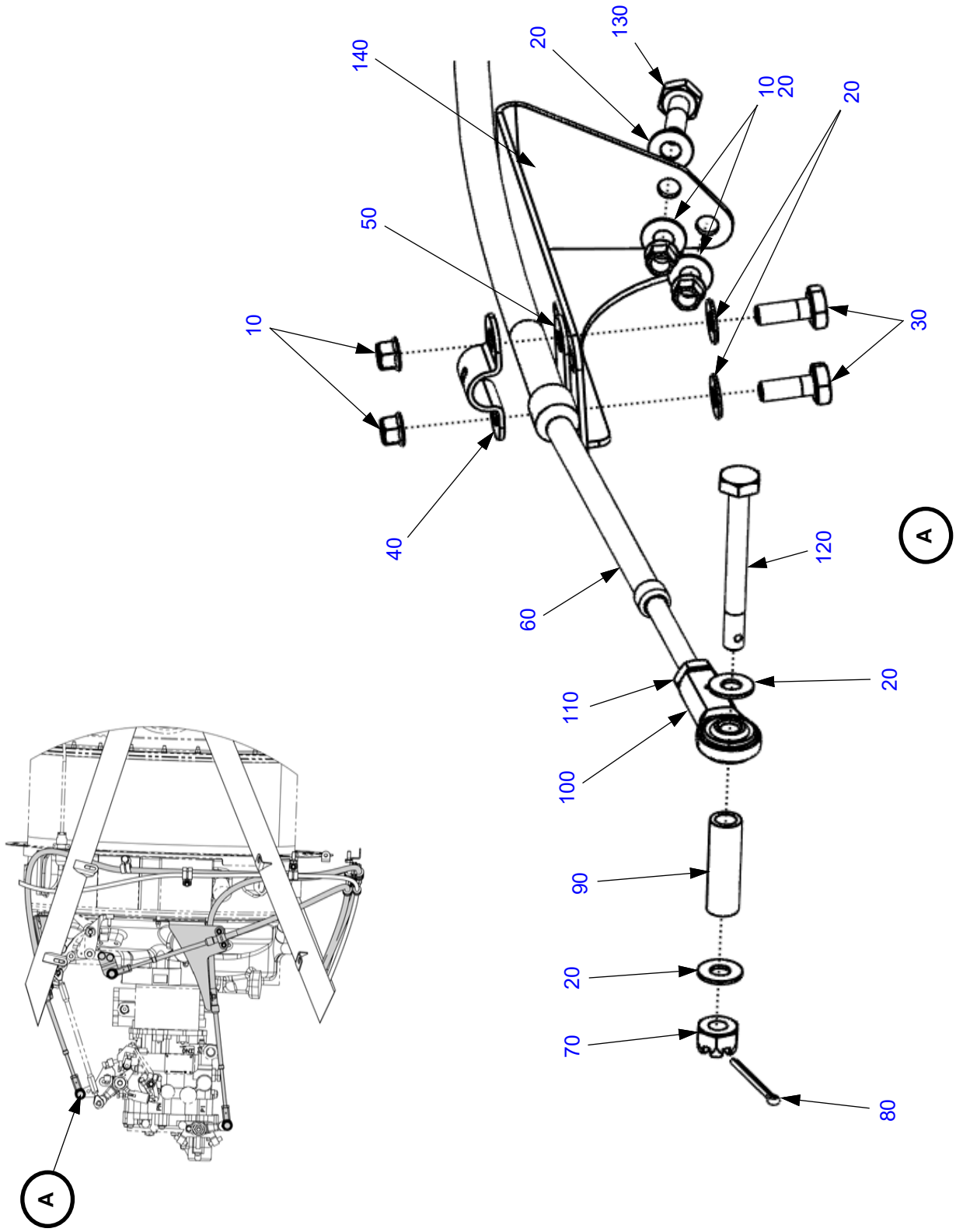

Table 76-10.9: Fuel Condition Cable - FCU Connection

Figure Item Number	Part Number	Part Name	Effectivity Code	Amount in Assy.
10	MS21042L3	Nut, Self-locking, 450°, Reduced #10-32	K003 and On	4
20	NAS1149F0332P	Washer, Flat #10 x .032	K003 and On	7
30	AN3-4A	Bolt, 10-32 x 17/32" Undrilled	K003 and On	2
40	PK76000004	Clamp, Cable, Push/pull Upper	K003 and On	1
50	PK76000005	Clamp, Cable, Push/pull Lower	K003 and On	1
60	PK99003009	Turbine Fuel Condition Cable	K003 and On	1
70	AN310-3	Nut, Castellated, Steel 10-32	K003 and On	1
80	MS24665-134	Pin, Cotter, Cad Steel Ø .062 x .75	K003 and On	1
90	NAS43DD3-64N	Spacer, Aluminum .214 I.D. x .312 O.D. x 1.000	K003 and On	1
100	PK99002001	Rod End, Female, Dia .190 Bore, .190-32 UNF-2B RH Thd	K003 and On	1
110	AN315-3R	Nut, Plain, Hexagon, Airframe, 10-32, RH Thread	K003 and On	1
120	AN3-16	Bolt, 10-32 x 1-25/32" Drilled Shank	K003 and On	1
130	AN3-5A	Bolt, 10-32 x 21/32" Undrilled	K003 and On	1
140	PK76000001	Bracket, Turbine Fuel Condition Cable	K003 and On	1

Figure 76-10.10: Manual Override - FCU Connection

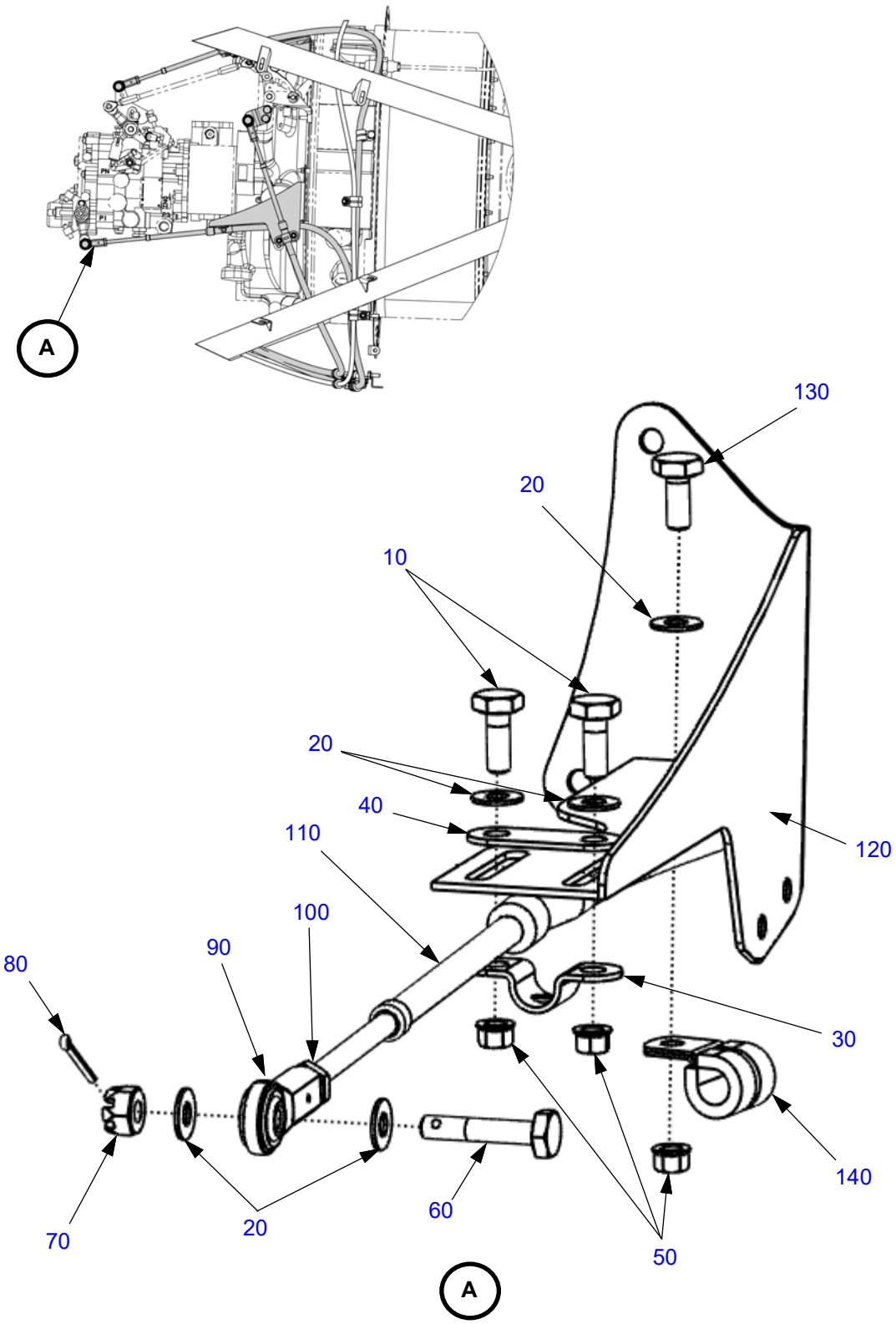

Table 76-10.10: Manual Override - FCU Connection

Figure Item Number	Part Number	Part Name	Effectivity Code	Amount in Assy.
10	AN3-4A	Bolt, 10-32 x 17/32" Undrilled	K003 and On	2
20	NAS1149F0332P	Washer, Flat #10 x .032	K003 and On	5
30	PK76000004	Clamp, Cable, Push/pull Upper	K003 and On	1
40	PK76000005	Clamp, Cable, Push/pull Lower	K003 and On	1
50	MS21042L3	Nut, Self-locking, 450°, Reduced #10-32	K003 and On	3
60	AN3-10	Bolt, 10-32 x 1-1/32" Drilled Shank	K003 and On	1
70	AN310-3	Nut, Castellated, Steel 10-32	K003 and On	1
80	MS24665-134	Pin, Cotter, Cad Steel Ø .062 x .75	K003 and On	1
90	PK99002001	Rod End, Female, Dia .190 Bore, .190-32 UNF-2B RH Thd	K003 and On	1
100	AN315-3R	Nut, Plain, Hexagon, Airframe, 10-32, RH Thread	K003 and On	1
110	PK99003007	Emergency Power Cable	K003 and On	1
120	AK76005000	Weld Assy, Bracket, Power, Engine Cables	K003 and On	1
130	AN3-3A	Bolt, 10-32 x 15/32" Undrilled	K003 and On	1
140	AS21919WCJ05	Clamp, Loop Type, Cushioned, Cres, Ø .313	K003 and On	1

Figure 76-10.11: Engine Control Cables - Quadrant to Bulkhead

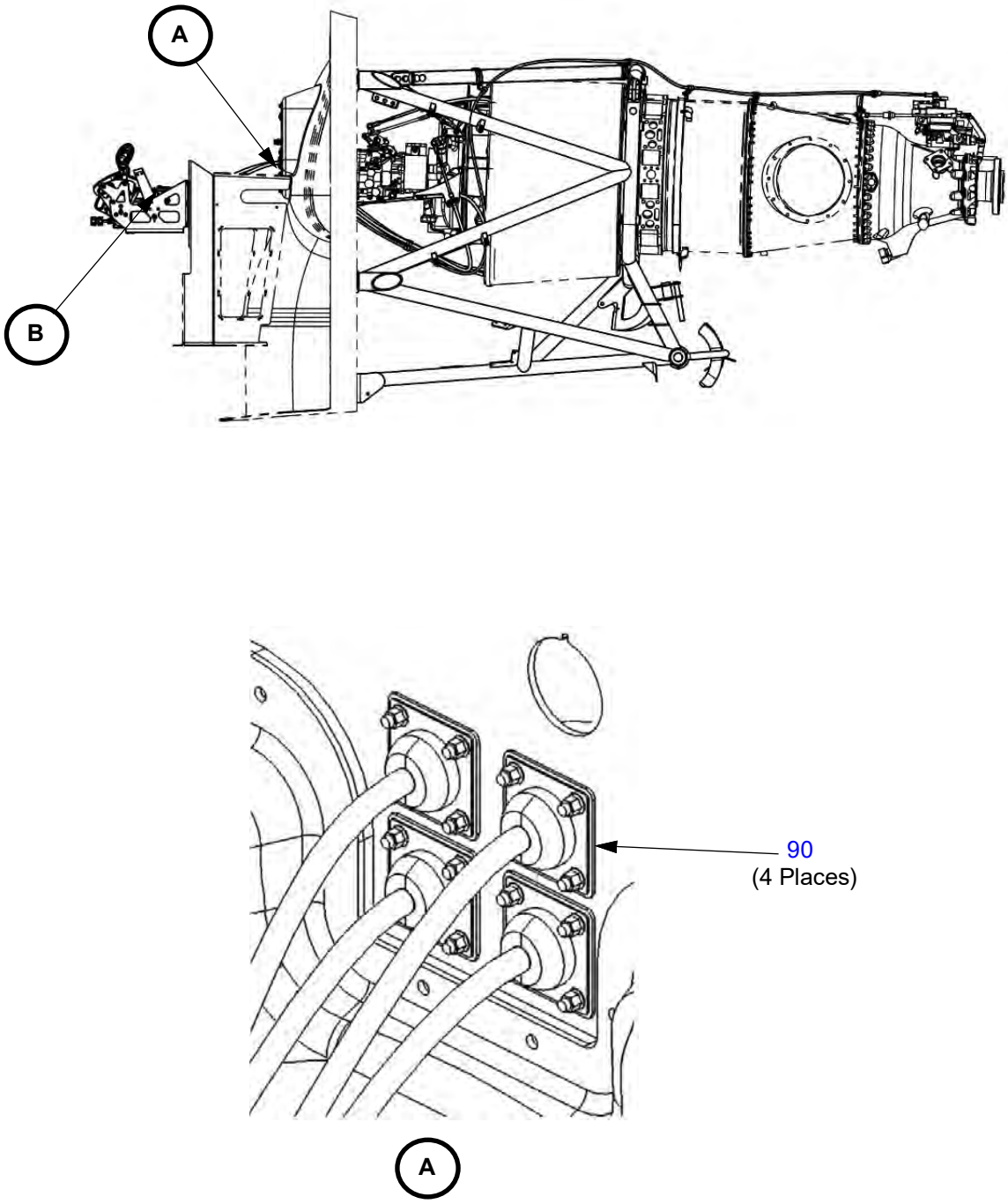

Figure 76-10.11: Engine Control Cables - Quadrant to Bulkhead (Continued)

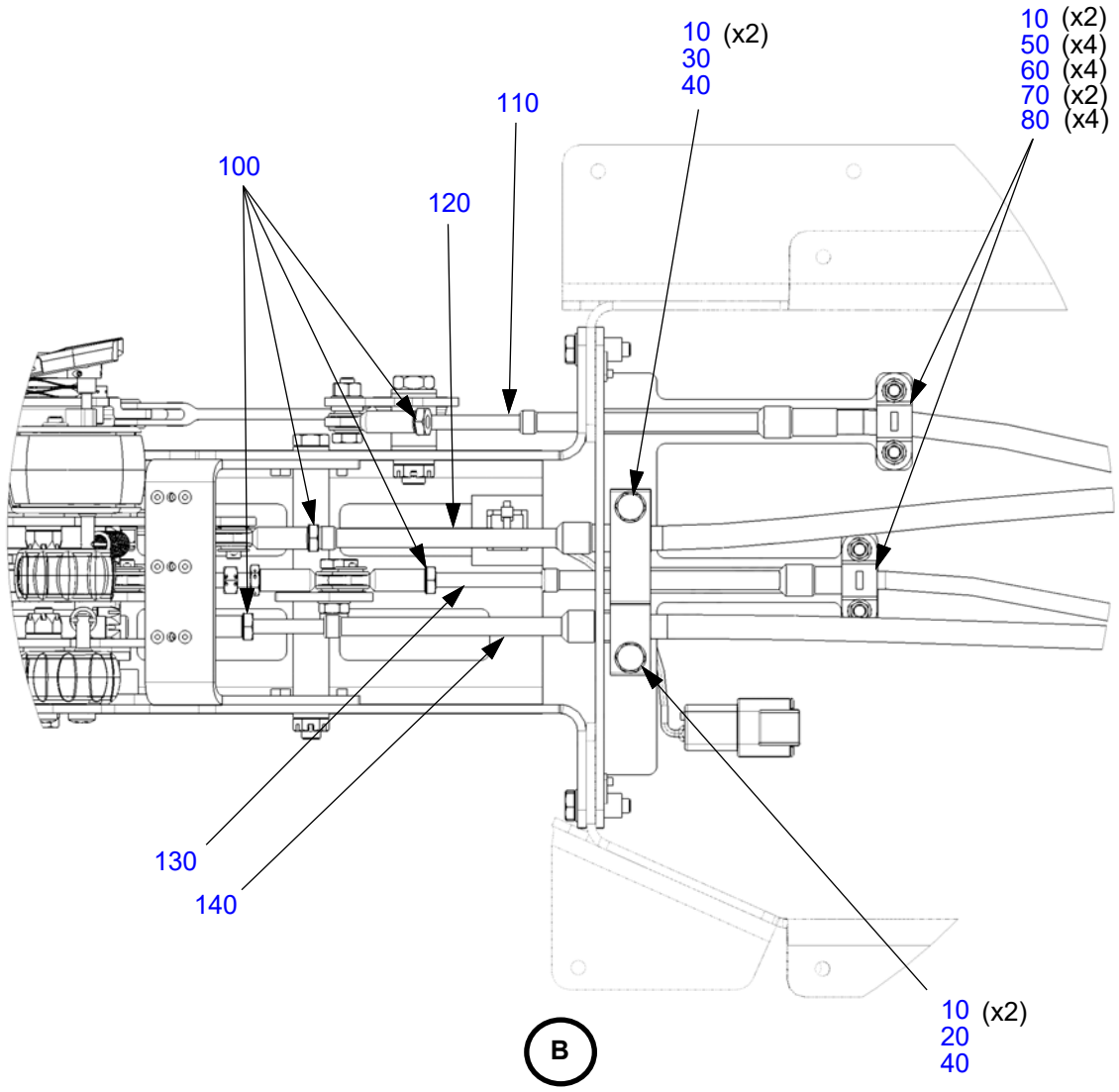

Table 76-10.11: Engine Control Cables - Quadrant to Bulkhead

Figure Item Number	Part Number	Part Name	Effectivity Code	Amount in Assy.
10	NAS1149F0332P	Washer, Flat #10 x .032	K003 and On	12
20	AN3-13A	Bolt, 10-32 x 1-13/32" Undrilled	K003 and On	1
30	AN3-17A	Bolt, 10-32 x 1-29/32" Undrilled	K003 and On	1
40	MS21044N3	Nut, Self-locking, Steel 10-32	K003 and On	2
50	MS21042L3	Nut, Self-locking, 450°, Reduced #10-32	K003 and On	8
60	PK76000004	Clamp, Cable, Push/pull Upper	K003 and On	4
70	PK76000005	Clamp, Cable, Push/pull Lower	K003 and On	4
80	AN3-7A	Bolt, 10-32 x 29/32" Undrilled	K003 and On	9
90	PK99007046	Bulkhead Fitting	K003 and On	4
100	AN315-3R	Nut, Plain, Hexagon, Airframe, 10-32, RH Thread	K003 and On	8
110	PK99003006	Turbine Power Cable	K003 and On	1
120	PK99003007	Emergency Power Cable	K003 and On	1
130	PK99003008	Prop Control Cable	K003 and On	1
140	PK99003009	Turbine Fuel Condition Cable	K003 and On	1

Figure 76-10.12: Engine Control Cables - Bulkhead to FCU

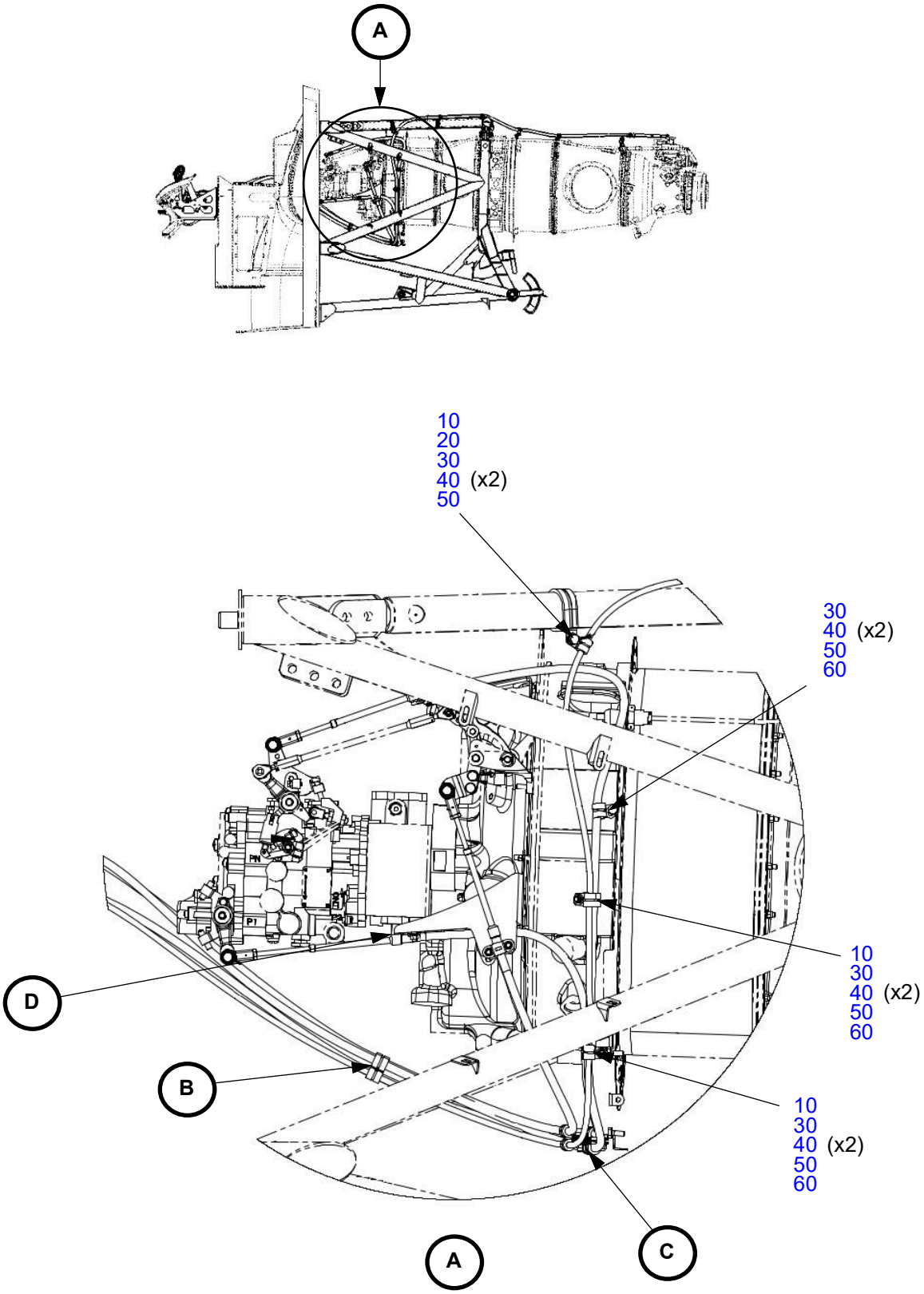

Figure 76-10.12: Engine Control Cables - Bulkhead to FCU (Continued)

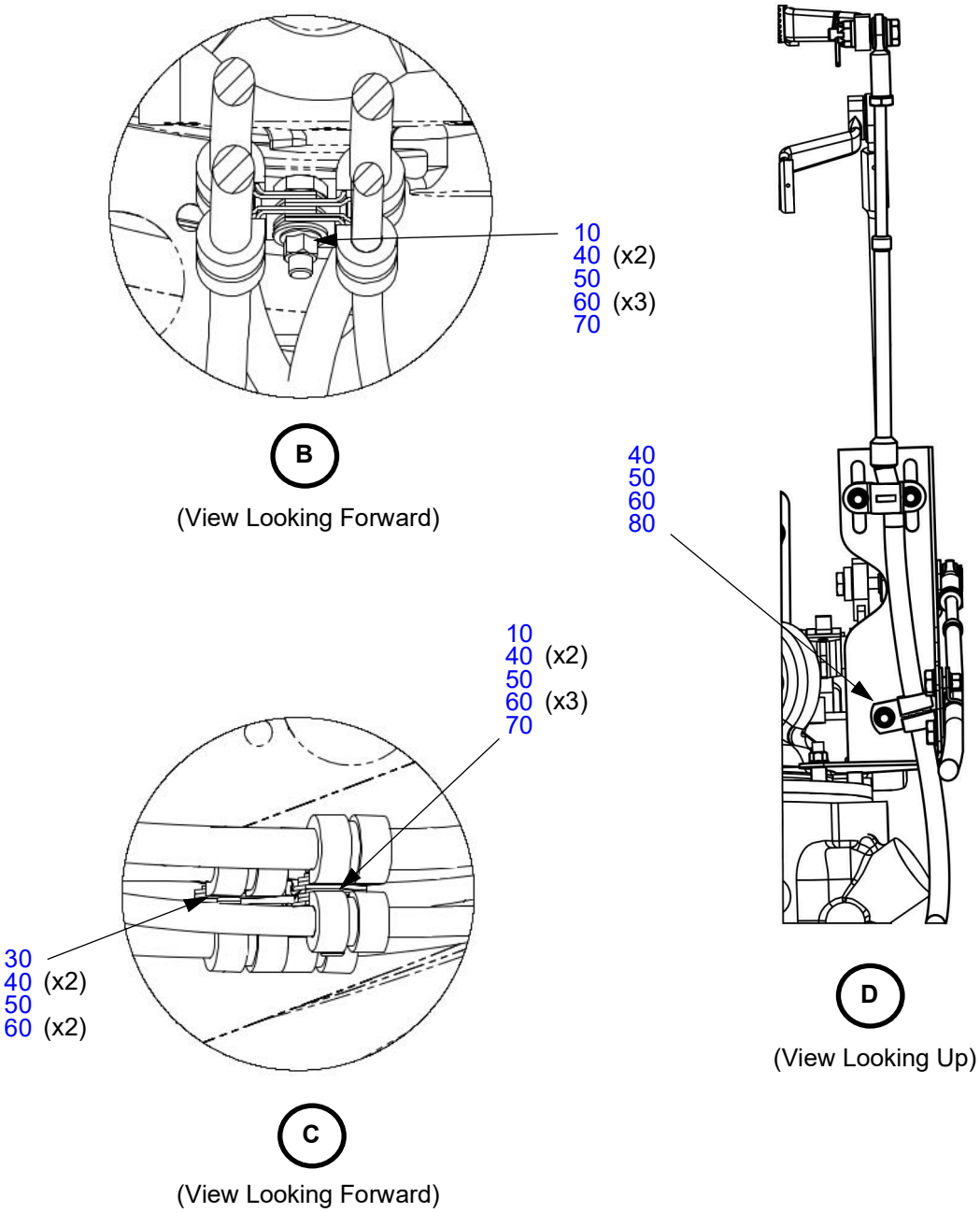

Table 76-10.12: Engine Control Cables - Bulkhead to FCU

Figure Item Number	Part Number	Part Name	Effectivity Code	Amount in Assy.
10	AS21919WCJ04	Clamp, Loop Type, Cushioned, Cres, Ø .250	K003 and On	5
20	AS21919WCJ24	Clamp, Loop Type, Cushioned, Cres, Ø 1.500	K003 and On	1
30	AN3-4A	Bolt, 10-32 x 17/32" Undrilled	K003 and On	5
40	NAS1149F0332P	Washer, Flat #10 x .032	K003 and On	15
50	MS21042L3	Nut, Self-locking, 450°, Reduced #10-32	K003 and On	10
60	AS21919WCJ05	Clamp, Loop Type, Cushioned, Cres, Ø .313	K003 and On	10
70	AN3-5A	Bolt, 10-32 x 21/32" Undrilled	K003 and On	2
80	AN3-3A	Bolt, 10-32 x 15/32" Undrilled	K003 and On	1

Figure 76-10.13: Propeller Cable - FCU to Propeller Governor

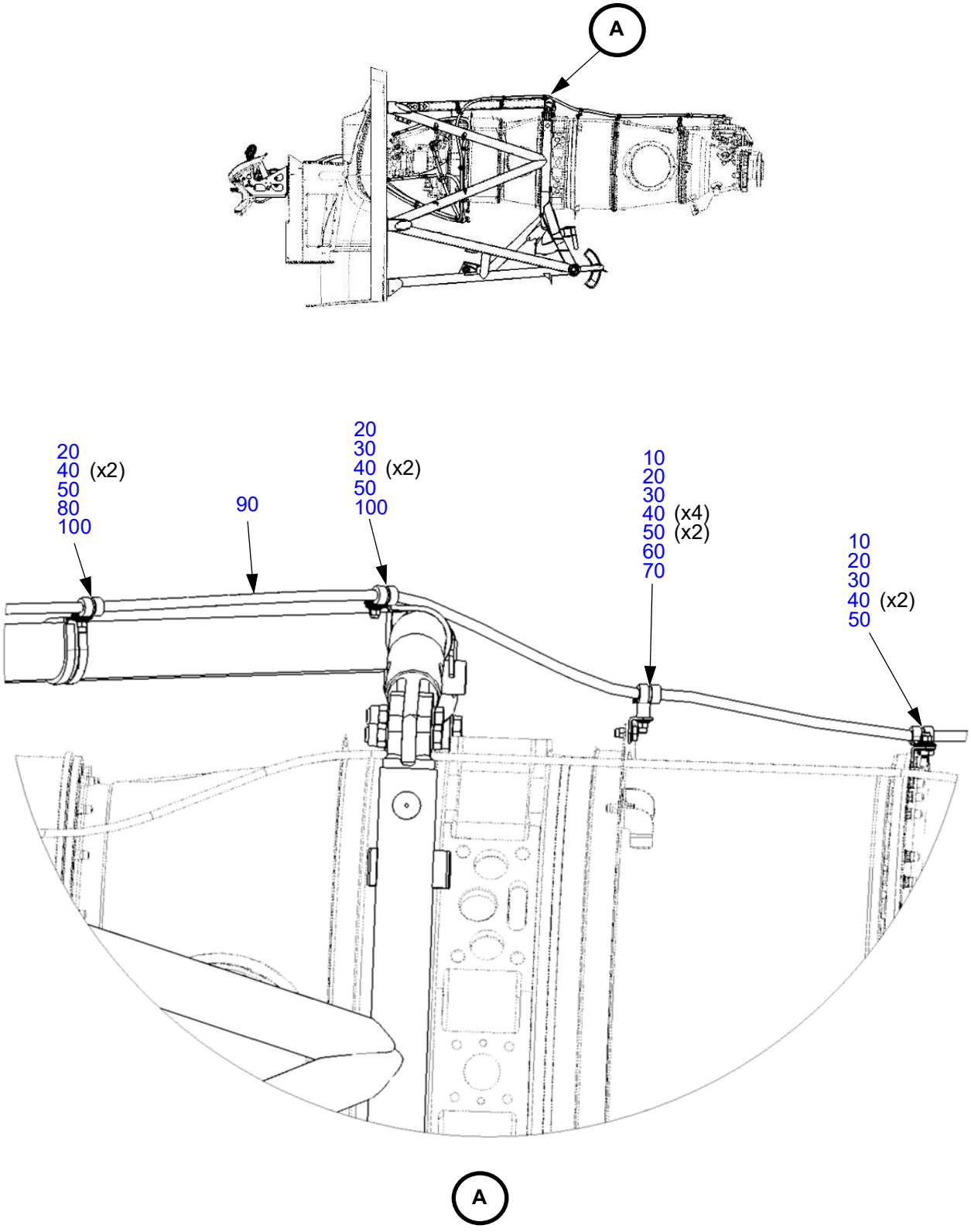

Figure 76-10.13: Propeller Cable - FCU to Propeller Governor (Continued)

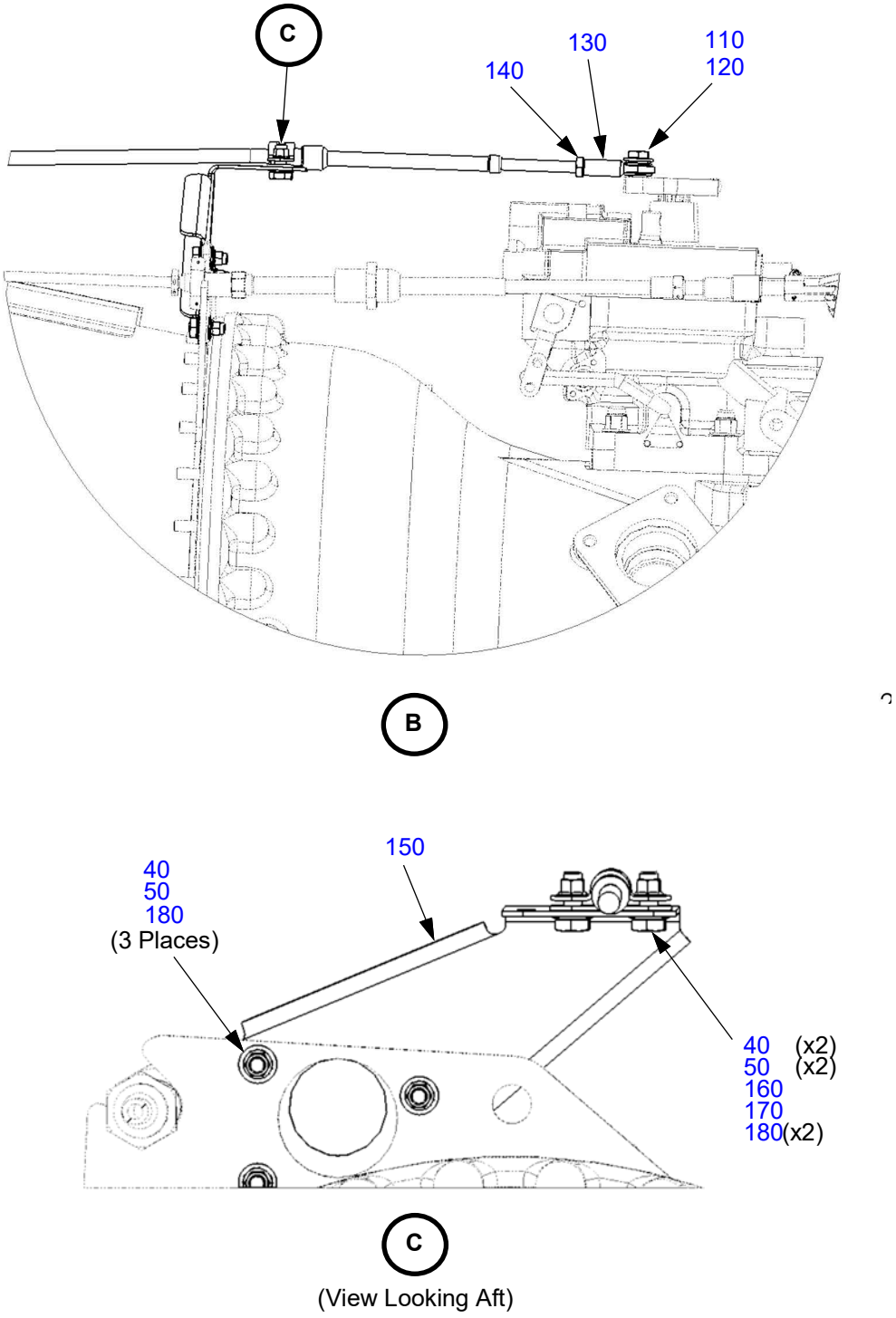

Table 76-10.13: Propeller Cable - FCU to Propeller Governor

Figure Item Number	Part Number	Part Name	Effectivity Code	Amount in Assy.
10	AN743-12	Bracket, Support Clamp	K003 and On	2
20	AS21919WCJ04	Clamp, Loop Type, Cushioned, Cres, Ø .250	K003 and On	4
30	AN3-3A	Bolt, 10-32 x 15/32" Undrilled	K003 and On	4
40	NAS1149F0332P	Washer, Flat #10 x .032	K003 and On	13
50	MS21042L3	Nut, Self-locking, 450°, Reduced #10-32	K003 and On	9
60	AN3-7A	Bolt, 10-32 x 29/32" Undrilled	K003 and On	5
70	NAS43DD3-25N	Spacer, Aluminum .214 I.D. x .312 O.D. x .391	K003 and On	1
80	AN3-4A	Bolt, 10-32 x 17/32" Undrilled	K003 and On	1
90	PK99003008	Prop Control Cable	K003 and On	1
100	AS21919WCJ24	Clamp, Loop Type, Cushioned, Cres, Ø 1.500	K003 and On	1
110	AN3H5A	Bolt, 10-32 x 21/32" Drilled Head	K003 and On	1
120	3010566	Pratt & Whitney Washer, Flat, 3/16" Dia	K003 and On	1
130	PK99002001	Rod End, Female, Dia .190 Bore, .190-32 UNF-2B RH Thd	K003 and On	4
140	AN315-3R	Nut, Plain, Hexagon, Airframe, 10-32, RH Thread	K003 and On	8
150	PK76000003	Bracket, Prop Control Cable	K003 and On	1
160	PK76000004	Clamp, Cable, Push/pull Upper	K003 and On	1
170	PK76000005	Clamp, Cable, Push/pull Lower	K003 and On	1
180	AN3-4A	Bolt, 10-32 x 17/32" Undrilled	K003 and On	5

This Page Intentionally Left Blank

CHAPTER
77

Engine Indicating

This Page Intentionally Left Blank

Table of Contents
and
List of Effective Pages

Chapter/Section	Page Number	Effective Date
77-Title	Page 1	03 Apr 2020
77-Title	Page 2	03 Apr 2020
77-LOEP	Page 1	26 Mar 2024
77-LOEP	Page 2	03 Apr 2020
77-TOC	Page 1	03 Apr 2020
77-TOC	Page 2	03 Apr 2020
Integrated Engine Instrument System		
77-40	Page 1	03 Apr 2020
77-40	Page 2	26 Mar 2024
77-40	Page 3	03 Apr 2020
77-40	Page 4	14 Jul 2021
77-40	Page 5	14 Jul 2021
77-40	Page 6	14 Jul 2021
77-40	Page 7	14 Jul 2021
77-40	Page 8	14 Jul 2021

This Page Intentionally Left Blank

CHAPTER 77

Table of Contents

List of Effective Pages ..... 77-LOEP / Page 1
Table of Contents ..... 77-TOC / Page1

Paragraph **Page Number**

Integrated Engine Instrument System

Figure 77-40.1: Engine and Airframe Interface ..... 77-40 / Page 1
Table 77-40.1: Engine and Airframe Interface ..... 77-40 / Page 2
Figure 77-40.2: Tachometer Generators ..... 77-40 / Page 3
Table 77-40.2: Tachometer Generators ..... 77-40 / Page 5
Figure 77-40.3: Differential Pressure Transducer ..... 77-40 / Page 6
Table 77-40.3: Differential Pressure Transducer ..... 77-40 / Page 7

This Page Intentionally Left Blank

INTEGRATED ENGINE INSTRUMENT SYSTEM

Figure 77-40.1: Engine and Airframe Interface

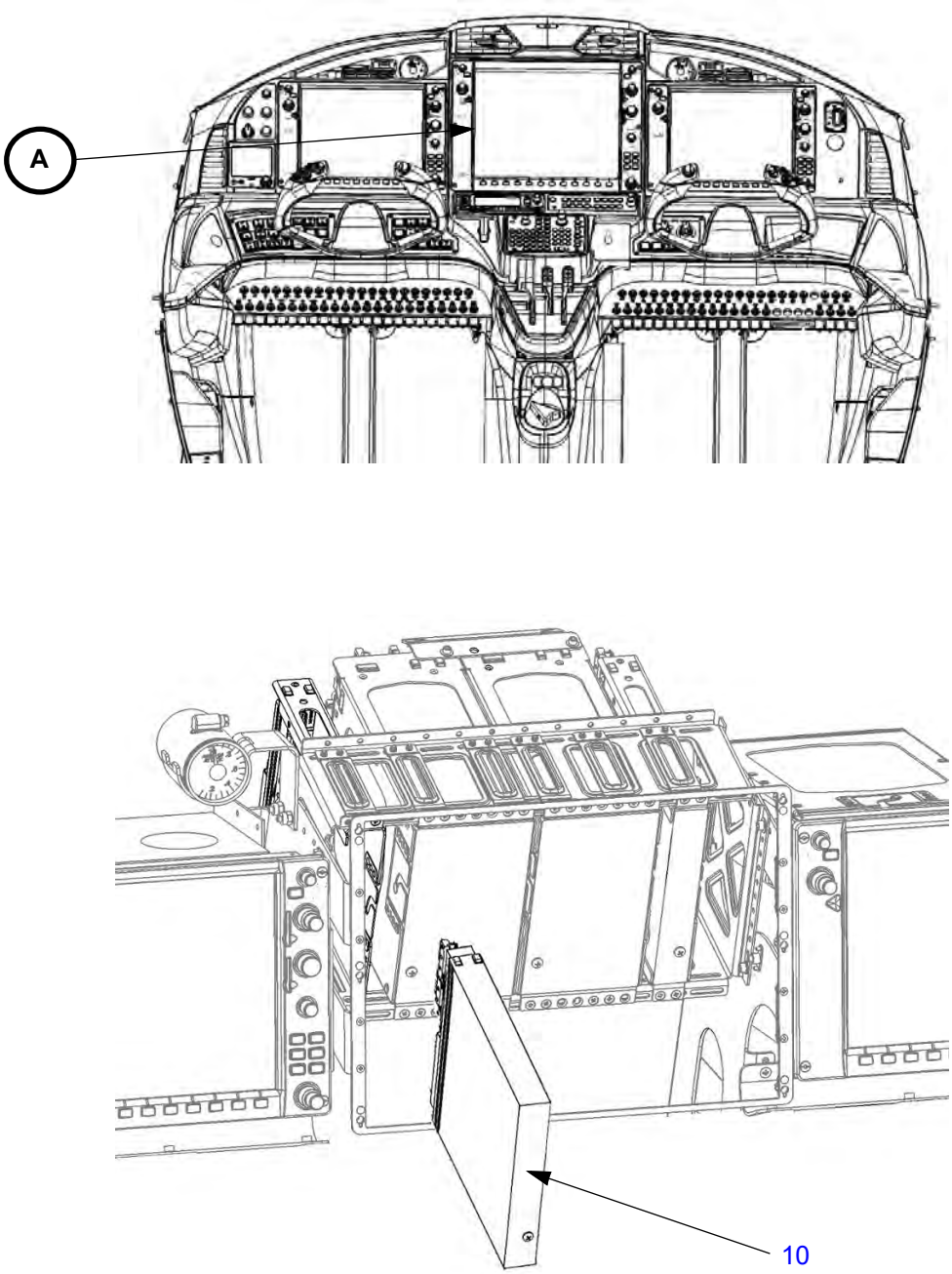

Shown with MFD Removed.

Table 77-40.1: Engine and Airframe Interface

Figure Item Number	Part Number	Part Name	Effectivity Code	Amount in Assy.
10	011-03682-00 MOD 3	GEA 71b, LRU, Remote, Eng/airframe Data Processor	K003 and On	1

Figure 77-40.2: Tachometer Generators

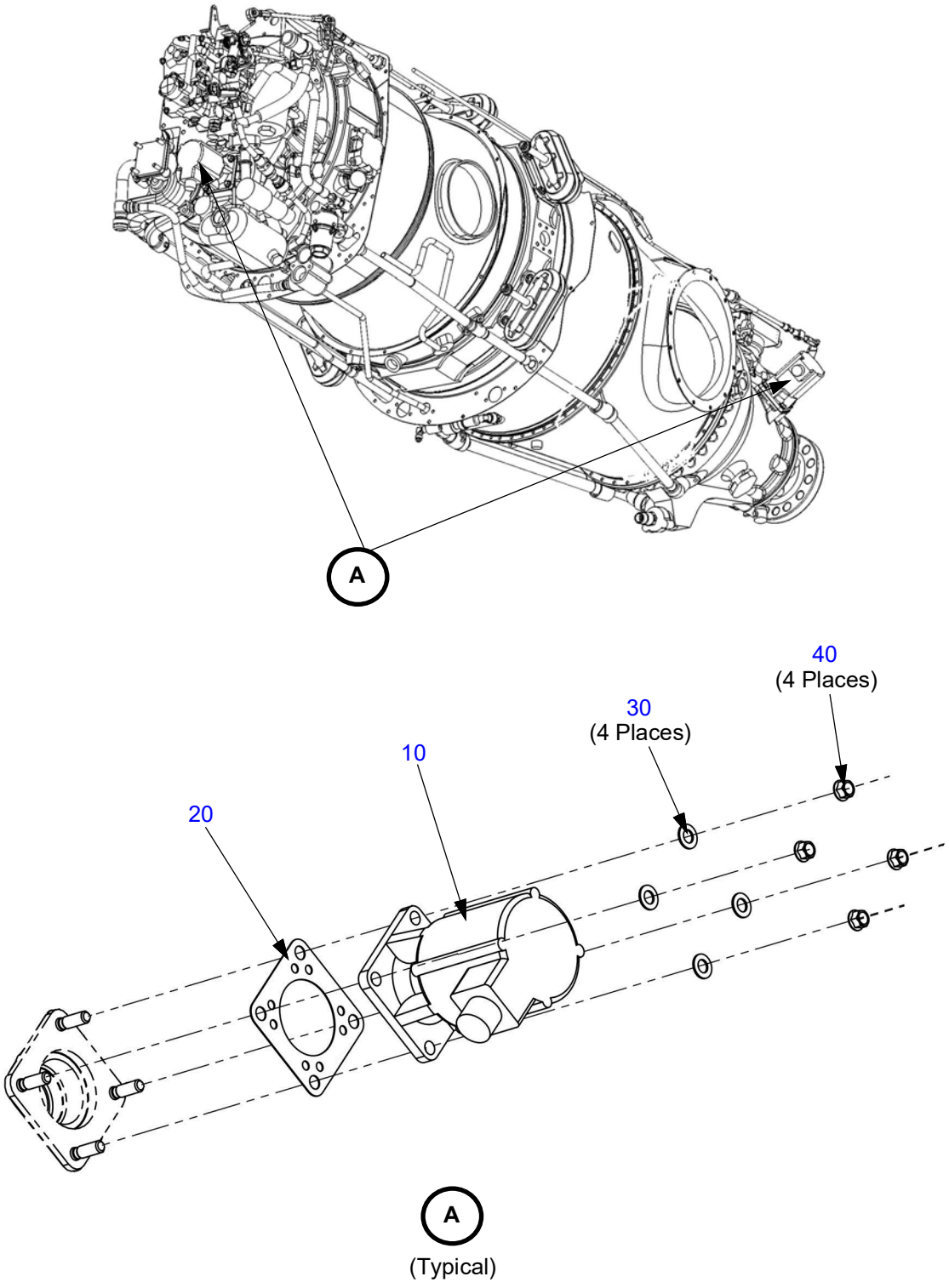

Figure 77-40.2: Tachometer Generators (Continued)

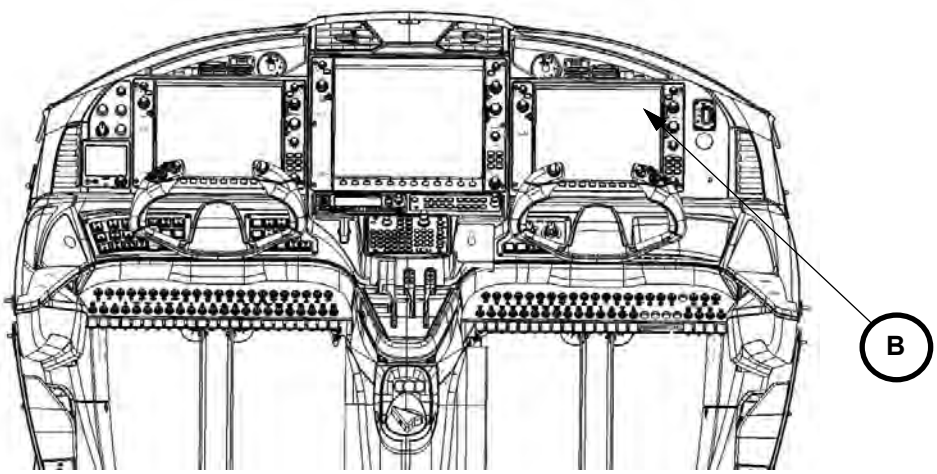

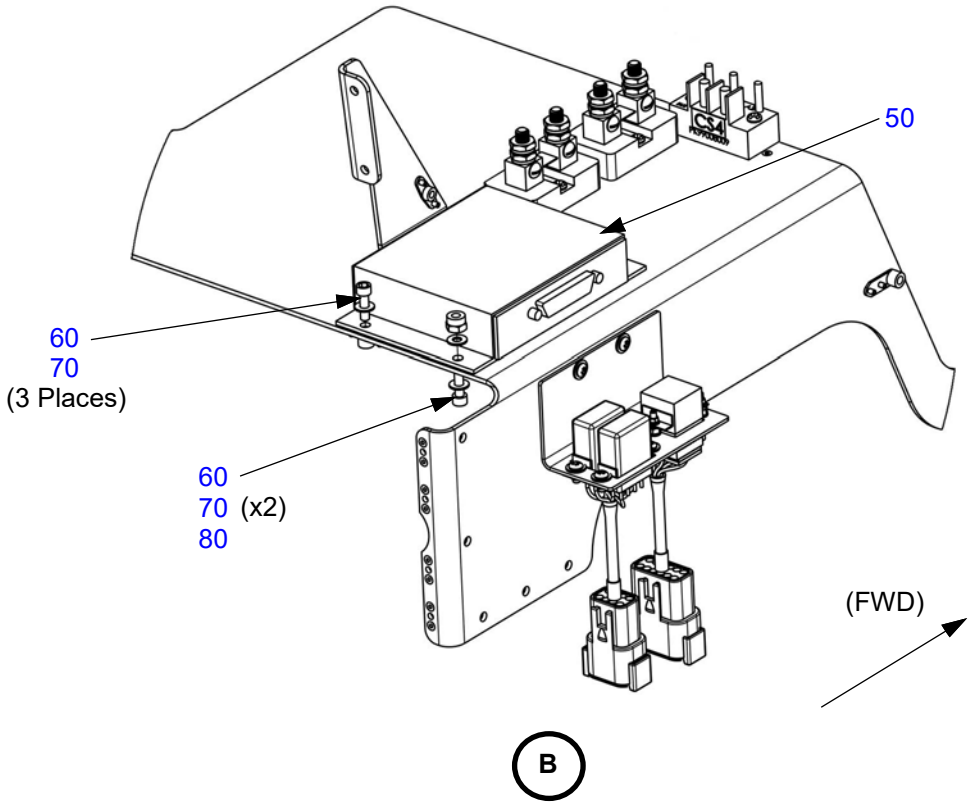

Table 77-40.2: Tachometer Generators

Figure Item Number	Part Number	Part Name	Effectivity Code	Amount in Assy.
10	PK99007072	Tachometer Generator	K003 and On	2
20	AS3491-01	Gasket, Engine Accessory Drive	K003 and On	2
30	AS9549-10	Washer, Flat, CRES, Ø .250	K003 and On	8
40	MS21042L4	Nut, Self-locking, 450°, Reduced 1/4-28	K003 and On	8
50	305662-00	St 26 Tach Generator Adapter	K003 and On	1
60	NAS1352-08-9P	Screw, Socket Head .164-32 x .563	K003 and On	4
70	NAS1149FN832P	Washer, Flat #8 x .032	K003 and On	5
80	MS21044N08	Nut, Self-locking, Steel .164-32	K003 and On	1

Figure 77-40.3: Differential Pressure Transducer

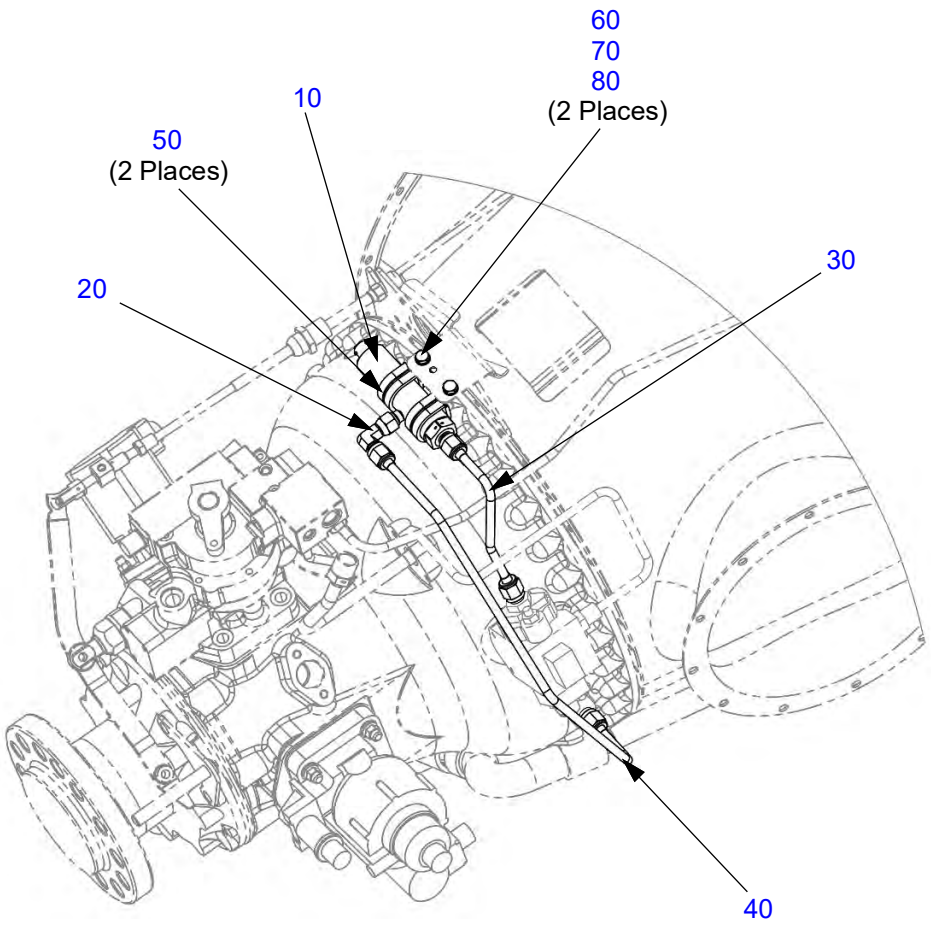

Table 77-40.3: Differential Pressure Transducer

Figure Item Number	Part Number	Part Name	Effectivity Code	Amount in Assy.
10	APTE-51I-1000-85D	Kulite: Differential Pressure Transducer, Engine Torque	K003 and On	1
20	4 C6X-SS	Parker: Fitting, 90 Deg Swivel, Male - Female Flare, 1/4" OD Tube	K003 and On	1
30	AK71002010 B	Tube Assembly, Torque High, Transducer	K003 and On	1
40	AK71002020 B	Tube Assembly, Torque Low, Transducer	K003 and On	1
50	AS21919WCJ16	Clamp, Loop Type, Cushioned, CRES, Ø 1.000	K003 and On	2
60	AN3-4A	Bolt, 10-32 x 17/32" Undrilled	K003 and On	2
70	NAS1149F0332P	Washer, Flat #10 x .032	K003 and On	2
80	MS21042L3	Nut, Self-locking, 450°, Reduced #10-32	K003 and On	2

This Page Intentionally Left Blank

CHAPTER
78

Exhaust

This Page Intentionally Left Blank

Table of Contents
and
List of Effective Pages

Chapter/Section	Page Number	Effective Date
78-Title	Page 1	03 Apr 2020
78-Title	Page 2	03 Apr 2020
78-LOEP	Page 1	03 Apr 2020
78-LOEP	Page 2	03 Apr 2020
78-TOC	Page 1	03 Apr 2020
78-TOC	Page 2	03 Apr 2020
Exhaust Stacks		
78-10	Page 1	03 Apr 2020
78-10	Page 2	03 Apr 2020

This Page Intentionally Left Blank

CHAPTER 78

Table of Contents

List of Effective Pages ..... 78-LOEP / Page 1
Table of Contents ..... 78-TOC / Page1

Paragraph **Page Number**

Exhaust Stacks

Figure 78-10.1: Exhaust Stacks ..... 78-10 / Page 1
Table 78-10.1: Exhaust Stacks ..... 78-10 / Page 2

This Page Intentionally Left Blank

EXHAUST

Figure 78-10.1: Exhaust Stacks

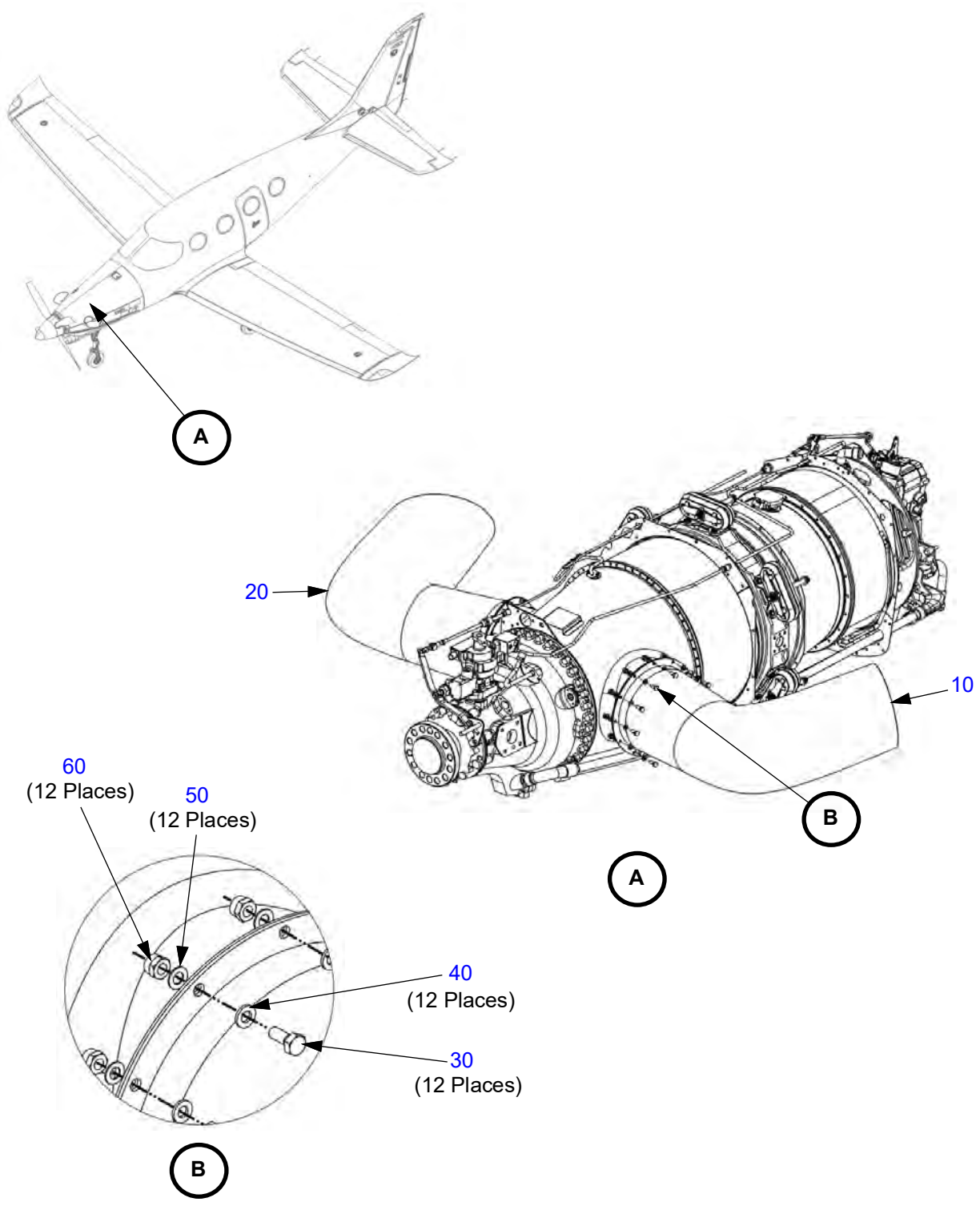

Left side shown, right side opposite.

Table 78-10.1: Exhaust Stacks

Figure Item Number	Part Number	Part Name	Effectivity Code	Amount in Assy.
10	PK99000001	Exhaust Stack, Left	K003 and On	1
20	PK99000002	Exhaust Stack, Right	K003 and On	1
30	MS20034-1	Bolt, 1200 Deg., Cres, .250-28 x .641	K003 and On	24
40	NAS1149C0463R	Washer, Flat 1/4 x .063	K003 and On	24
50	AS9549-10	Washer, Flat, Cres, Ø .250	K003 and On	24
60	MS20500-428	Nut, Self Locking, Cres, 1200 Deg, .250-28	K003 and On	24

CHAPTER
79

Oil

This Page Intentionally Left Blank

Table of Contents
and
List of Effective Pages

Chapter/Section	Page Number	Effective Date
79-Title	Page 1	03 Apr 2020
79-Title	Page 2	03 Apr 2020
79-LOEP	Page 1	03 Apr 2020
79-LOEP	Page 2	03 Apr 2020
79-TOC	Page 1	03 Apr 2020
79-TOC	Page 2	03 Apr 2020
	Oil	
79-20	Page 1	03 Apr 2020
79-20	Page 2	03 Apr 2020
79-20	Page 3	03 Apr 2020
79-20	Page 4	03 Apr 2020
79-20	Page 5	03 Apr 2020
79-20	Page 6	03 Apr 2020

This Page Intentionally Left Blank

CHAPTER 79

Table of Contents

List of Effective Pages ..... 79-LOEP / Page 1
Table of Contents ..... 79-TOC / Page1

Paragraph **Page Number**

Oil

Figure 79-20.1: Oil Cooler ..... 79-20 / Page 1
Table 79-20.1: Oil Cooler ..... 79-20 / Page 3
Figure 79-20.2: Oil Pressure and Temperature Sensors ..... 79-20 / Page 4
Table 79-20.2: Oil Pressure and Temperature Sensors ..... 79-20 / Page 5

This Page Intentionally Left Blank

OIL

Figure 79-20.1: Oil Cooler

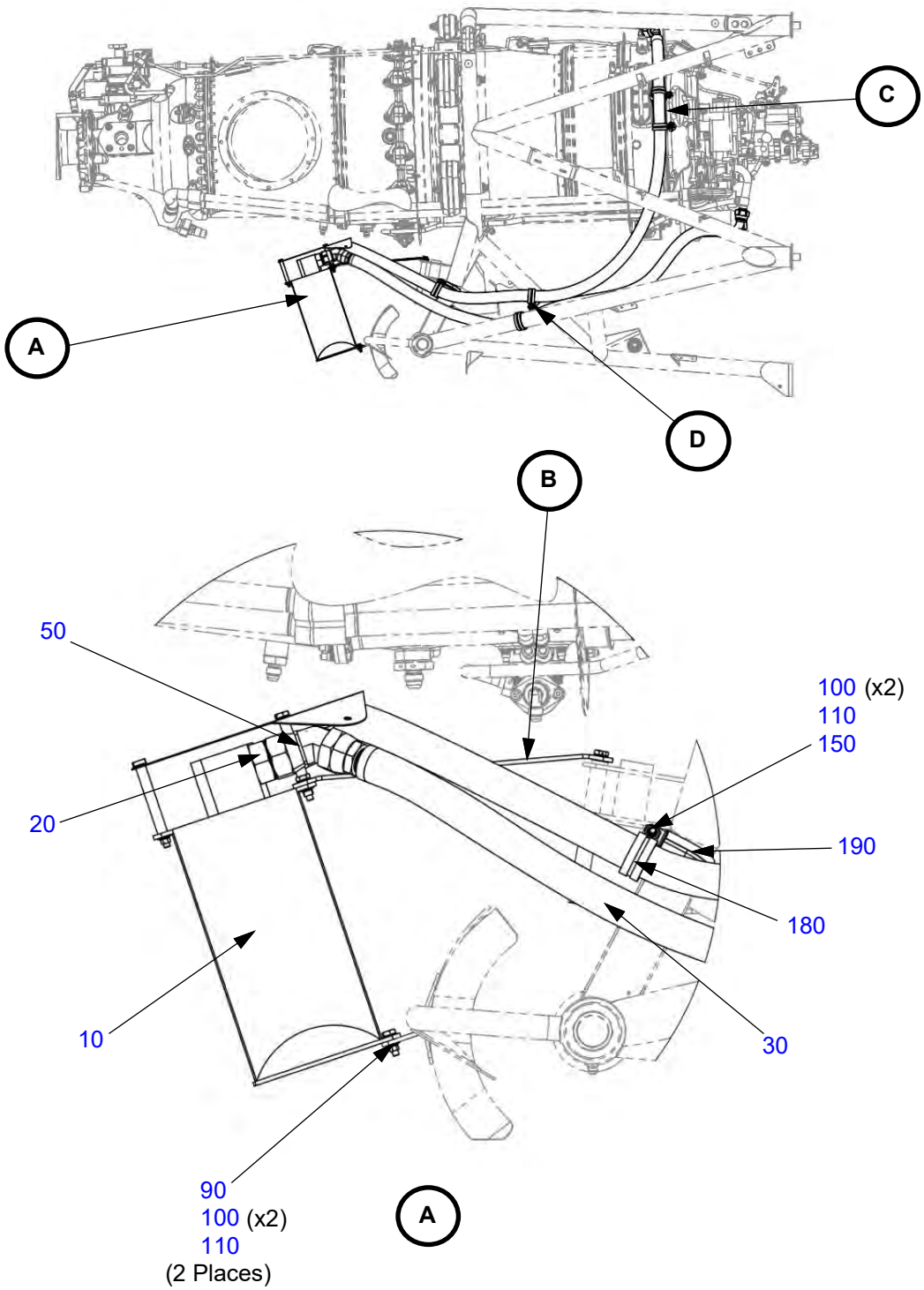

Figure 79-20.1: Oil Cooler (Continued)

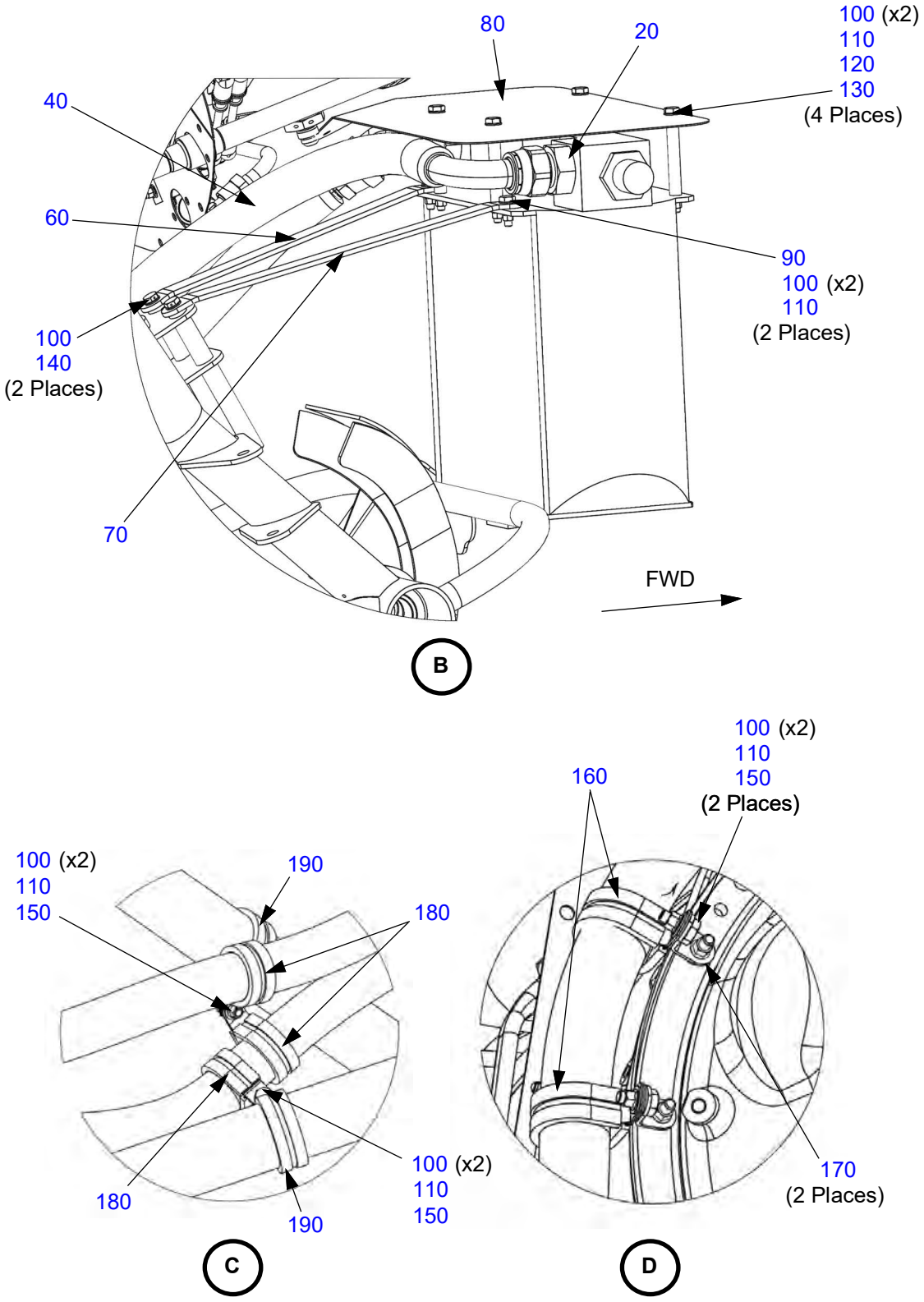

Table 79-20.1: Oil Cooler

Figure Item Number	Part Number	Part Name	Effectivity Code	Amount in Assy.
10	AK79200100	Oil Cooler	K003 and On	1
20	12 F5OX-SS	Fitting, Straight, ORB To JIC , .75 Tube	K003 and On	2
30	AE2463532K045 5171J005-12CR-0455	Eaton Hose Assy, -12 x 45.63", Straight-to-90° Elbow, Fire Sleeved Parker Hose Assy, -12 x 45.63", Straight-to-90° Elbow, Fire Sleeved	K003 and On	1
40	AE4704K0684-150171J062G0684C150	Eaton Hose Assy, -12 x 68.5", 45 x 90 Deg Ends, Fire Sleeved Parker Hose Assy, -12 x 68.5", 45 x 90 Deg Ends, Fire Sleeved	K003 and On	1
50	12_V6X-S	Parker: Fitting, Elbow, 45, JIC, 3/4	K003 and On	1
60	PK79200001	Bracket, Oil Cooler, Left	K003 and On	1
70	PK79200002	Bracket, Oil Cooler, Right	K003 and On	1
80	PK79200004	Shield, Fire, Oil Cooler	K003 and On	1
90	AN3-5A	Bolt, 10-32 x 21/32" Undrilled	K003 and On	4
100	NAS1149F0332P	Washer, Flat #10 x .032	K003 and On	20
110	MS21042L3	Nut, Self-locking, 450°, Reduced #10-32	K003 and On	9
120	AN3-25A	Bolt, 10-32 x 2-21/32" Undrilled	K003 and On	4
130	NAS43DD3-136N	Spacer, Aluminum .214 ID x .312 OD x 2.125	K003 and On	4
140	AN3H4A	Bolt, 10-32 x 17/32" Drilled Head	K003 and On	2
150	AN3-3A	Bolt, 10-32 x 15/32" Undrilled	K003 and On	4
160	AS21919WCJ18	Clamp, Loop Type, Cushioned, CRES, Ø 1.125	K003 and On	2
170	AN743-C12	Bracket, Support Clamp	K003 and On	2
180	AS21919WCJ18	Clamp, Loop Type, Cushioned, CRES, Ø 1.125	K003 and On	4
190	AS21919WCJ24	Clamp, Loop Type, Cushioned, CRES, Ø 1.500	K003 and On	3

Figure 79-20.2: Oil Pressure and Temperature Sensors

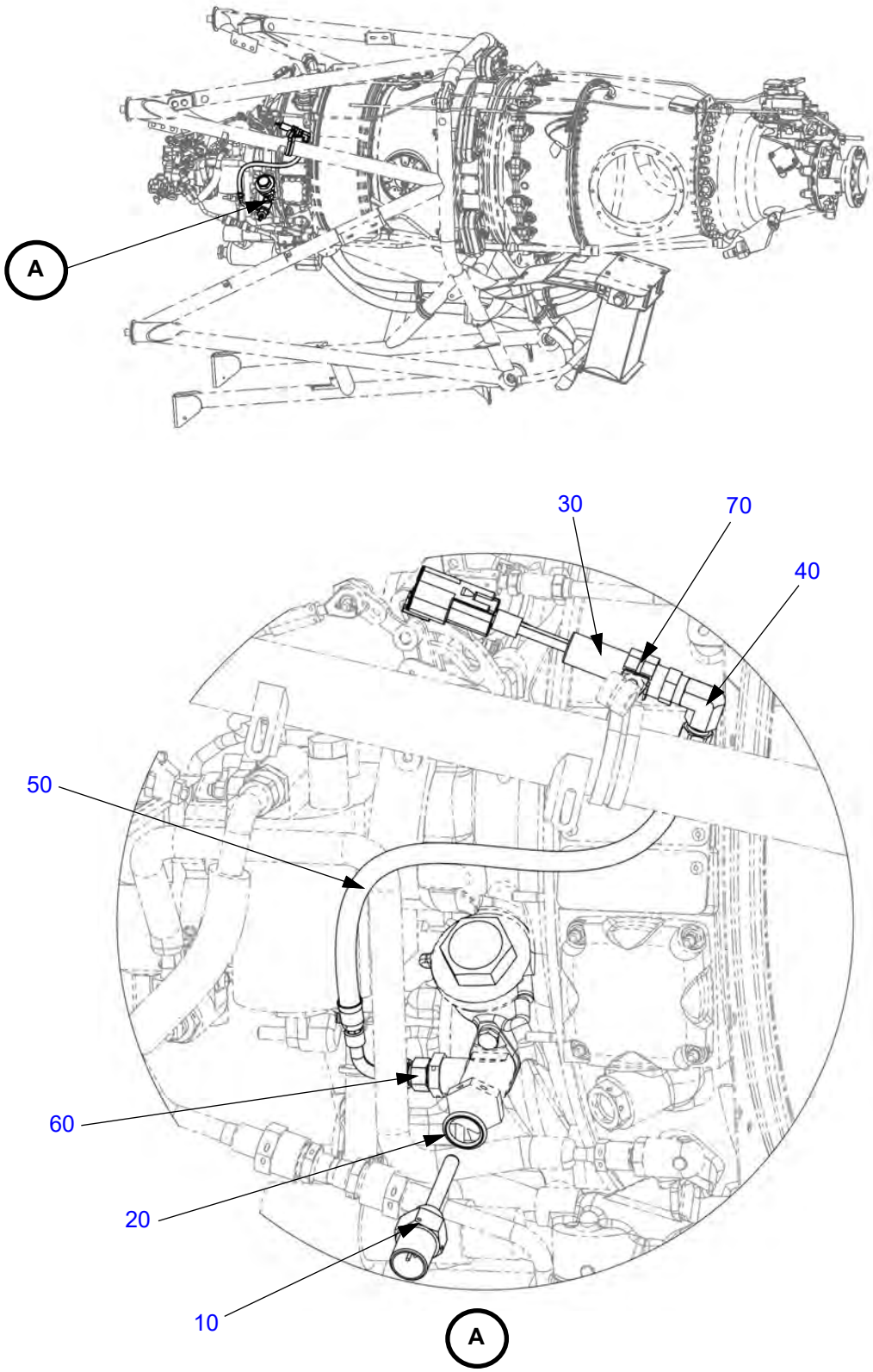

Table 79-20.2: Oil Pressure and Temperature Sensors

Figure Item Number	Part Number	Part Name	Effectivity Code	Amount in Assy.
10	MS28034-1	Bulbs, Temperature, Electrical, Resistance (-70 °c To +300 °c)	K003 and On	1
20	MS35769-11	Gasket, Metallic, Encased, Annular, Copper	K003 and On	1
30	AK79200402	Oil Pressure Transducer With Connector	K003 and On	1
40	4 DTX-SS	Parker: Female Elbow, 37° Flare/NPTF, 1/4 To 1/8-27	K003 and On	1
50	AE3663163 E 0150 124J002-4CR-150	Eaton Hose Assy, Straight-to-90° Elbow, -4x15.0" Parker Hose Assy, Straight-to-90° Elbow, -4x15.0"	K003 and On	1
60	4 F5OX-SS	Parker: Fitting, Straight, SAE-ORB / 37 Deg Flare	K003 and On	1
70	AS21919WCJ10	Clamp, Loop Type, Cushioned, CRES, Ø .625	K003 and On	1

This Page Intentionally Left Blank